EPA-670/2-74-040
December 1974

URBAN STORMWATER MANAGEMENT AND TECHNOLOGY:

An Assessment

By

John A. Lager
William G. Smith
Metcalf & Eddy, Inc.
Palo Alto, California 94303

Program Element No. 1BB034
Contract No. 68-03-0179

Project Officer

Richard Field
Storm and Combined Sewer Section (Edison, N.J.)
Advanced Waste Treatment Research Laboratory
National Environmental Research Center
Cincinnati, Ohio 45268

NATIONAL ENVIRONMENTAL RESEARCH CENTER
OFFICE OF RESEARCH AND DEVELOPMENT
U.S. ENVIRONMENTAL PROTECTION AGENCY
CINCINNATI, OHIO 45268

For sale by the Superintendent of Documents, U.S. Government
Printing Office, Washington, D.C. 20402

FOREWORD

Man and his environment must be protected from the adverse effects of pesticides, radiation, noise and other forms of pollution, and the unwise management of solid waste. Efforts to protect the environment require a focus that recognizes the interplay between the components of our physical environment--air, water, and land. The National Environmental Research Centers provide this multidisciplinary focus through programs engaged in

- studies on the effects of environmental contaminants on man and the biosphere, and
- a search for ways to prevent contamination and to recycle valuable resources.

Essentially every metropolitan area of the United States has a stormwater pollution problem, whether served by a combined sewer or a separate sewer system. This study provides selected results of a comprehensive investigation assessment of promising methods for the management of such pollution.

A. W. Breidenbach, Ph.D.
Director
National Environmental
Research Center, Cincinnati

ABSTRACT

A comprehensive investigation and assessment of promising, completed, and ongoing urban stormwater projects, representative of the state-of-the-art in abatement theory and technology, has been accomplished. The results, presented in textbook format, provide a compendium of project information on management and technology alternatives within a framework of problem identification, evaluation procedures, and program assessment and selection.

Essentially every metropolitan area of the United States has a stormwater problem, whether served by a combined sewer system (approximately 29 percent of the total sewered population) or a separate sewer system. However, the tools for reducing stormwater pollution, in the form of demonstrated processes and devices, do exist providing many-faceted approach techniques to individual situations. These tools are constantly being increased in number and improved upon as a part of a continuing nationwide research and development effort. The most promising approaches to date involve the integrated use of control and treatment systems with an areawide, multidisciplinary perspective.

This report was submitted in fulfillment of Contract Number 68-03-0179 by Metcalf & Eddy, Inc., Western Regional Office, under the sponsorship of the Environmental Protection Agency. Work was completed as of December 1973.

REVIEW NOTICE

The National Environmental Research Center--Cincinnati has reviewed this report and approved its publication. Approval does not signify that the contents necessarily reflect the views and policies of the U.S. Environmental Protection Agency, nor does mention of trade names or commercial products constitute endorsement or recommendation for use.

When a city takes a bath, what

do you do with the dirty water?

PREFACE

The nationwide significance of pollution caused by storm-generated discharges was first identified in the 1964 U.S. Public Health Service's publication on the "Pollutional Effects of Stormwater and Overflows from Combined Sewer Systems." Congress, in recognizing this problem, authorized funds under the Federal Water Pollution Control Act of 1965 and following legislation for the research, development, and demonstration of techniques for controlling this source of pollution.

The 1972 Amendments place new and stronger emphasis on urban runoff as a source of pollution. "An accelerated effort..." is stressed "...to develop, refine, and achieve practical application of waste management methods applicable to nonpoint sources of pollutants to eliminate the discharge of pollutants including, but not limited to, elimination of runoff of pollutants..." Construction grant applications and areawide or basin wastewater treatment management plans are being encouraged to include "...the necessary waste water collection and urban storm water runoff systems..." for the control and treatment of storm-generated pollution.

In the intervening years over 140 grants and contracts totaling over $90 million have been awarded under the United States Environmental Protection Agency (EPA) Storm and Combined Sewer Technology Research, Development, and Demonstration Program. The federal government's share has been approximately $46 million or 51.1 percent.

The objective of this text is to bring together the vast amount of knowledge and technical data accumulated through these projects and to present it in a format useful for decision-makers, whether they be principally engineers, administrators, or members of a concerned public.

To enhance professional and public awareness of the stormwater problem and abatement programs, a 30-minute narrated documentary color film has been produced as a part of

this project. The film, "Stormwater Pollution Control: A New Technology," is available through the EPA for public showings.

It must be recognized that the research and demonstration program is continuing and growing rapidly and that the assessments made herein are based on present and past data, necessarily reflecting their limitations. It is believed, however, that a valuable first step has been made in establishing a base upon which to direct future program emphasis, to plan and conduct pollution evaluations, and to implement effective abatement projects through construction and management.

Representative complementary studies underway concurrently include:

> "Water Quality Management Planning for Urban Runoff" (Contract 68-01-1846). This study will produce a guide manual to assist planners in a "first-cut" assessment of the types and sources of urban runoff pollution, the effects of land use, the applicability of abatement/treatment measures, and potential environmental impacts. The use of nomographs, graphs, and tables is emphasized.
>
> "Engineering Aspects of Storm and Combined Sewer Overflow Technology - A Manual of Instruction" (EPA No. 801358). Under this project a manual, including lecture outlines, for graduate course instruction in an Environmental Engineering curriculum is being developed and tested as a model for program introduction at universities throughout the United States.

Because several key terms are used extensively in this text, they are defined here. A complete glossary and list of abbreviations is in Section XVII.

Combined sewage - A sewage containing both domestic sewage and surface water or stormwater, with or without industrial wastes. Includes flow in heavily infiltrated sanitary sewer systems as well as combined sewer systems.

Combined sewer - A sewer receiving both intercepted surface runoff and municipal sewage.

Combined sewer overflow - Flow from a combined sewer in excess of the interceptor capacity that is discharged into a receiving water.

Intercepted surface runoff - That portion of surface runoff that enters a sewer, either storm or combined, directly through catch basins, inlets, etc.

Municipal sewage - Sewage from a community which may be composed of domestic sewage, industrial wastes, or both.

Nonsewered urban runoff - That part of the precipitation which runs off the surface of an urban drainage area and reaches a stream or other body of water without passing through a sewer system.

Sanitary sewer - A sewer that carries liquid and water-carried wastes from residences, commercial buildings, industrial plants, and institutions, together with relatively low quantities of ground, storm, and surface waters that are not admitted intentionally.

Storm flow - Overland flow, sewer flow, or receiving stream flow caused totally or partially by surface runoff.

Storm sewer - A sewer that carries intercepted surface runoff, street wash and other wash waters, or drainage, but excludes doemstic sewage and industrial wastes.

Storm sewer discharge - Flow from a storm sewer that is discharged into a receiving water.

Stormwater - Water resulting from precipitation which either percolates into the soil, runs off freely from the surface, or is captured by storm sewer, combined sewer, and to a limited degree sanitary sewer facilities.

Surface runoff - Precipitation that falls onto the surfaces of roofs, streets, ground, etc., and is not absorbed or retained by that surface, thereby collecting and running off.

Urban runoff - Surface runoff from an urban drainage area that reaches a stream or other body of water or a sewer.

CONTENTS

		Page
Abstract		iii
Preface		iv
Contents		vii
Figures		xiv
Tables		xix
Acknowledgments		xxiv
Section		
	Part I — CONCLUSIONS, RECOMMENDATIONS, AND INTRODUCTION	
I	CONCLUSIONS	3
	The Stormwater Problem	3
	Relative Magnitude	5
	Mass Loadings	6
	Variability	8
	Design Considerations	8
	Management Alternatives	9
	Source Control	9
	Collection System Control	10
	Storage and Treatment	11
	Integrated (Complex) Systems	16
II	RECOMMENDATIONS	18
	Evaluations and Planning	18
	Control	20
	Treatment	20
	Impact	22

CONTENTS (Continued)

Section		Page
III	INTRODUCTION	23
	Objective and Scope	24
	Method of Presentation	25
	Background	26
	1967 National Inventory	28
	EPA Research, Development, and Demonstration Program	29
	Other Programs	30
	Emerging Emphasis on the Stormwater Problem	31
	1972 FWPCA Amendments	32
	Comptroller General's Report	33
	State and Local Requirements	33
	Information Sources and Definition of Terms	33
	Information Sources	33
	Nomenclature and Terminology	34
	Part II — FORMULATING AN APPROACH	
IV	GUIDE TO PROGRAM ASSESSMENT AND SELECTION	39
	Preliminary Program Definition	39
	Scope	40
	Objectives	40
	Problem Identification	41
	Tributary Area	41
	Sewerage Network	42
	Characteristic Hydrology	42
	Receiving Waters	50
	Agencies	51
	Data Assessment and Program Development	52
	"First Cut" Analysis	52
	Candidate Evaluation: Data Needs	55
	Selection and Implementation of Final Plan	56
V	THE STORMWATER PROBLEM	59
	Emergence of the Stormwater Problem	59
	Historical Development of Sewer Systems	59
	The Stormwater Problem — Its Multiple Facets	64
	Characteristics of Stormwater	70
	Quantities of Flow	70
	Quality of Overflows and Discharges	73
	Stormwater Pollution Loadings	83
	Sources and Movement of Pollutants	88
	Contaminant Sources	88
	Collection and Transport	93

CONTENTS (Continued)

Section		Page
	Environmental Effects	97
	Bucyrus, Ohio	97
	Roanoke, Virginia	100
	Beneficial Aspects of Wet-Weather Discharges	102
VI	EVALUTAION PROCEDURES AND CRITERIA	103
	Data Collection	103
	Sampling	104
	Flow Measurement	112
	Direct-Reading Quality Sensors	118
	Analysis	119
	Process and Equipment Evaluation	121
	Method of Approach	123
	Basic Design Data	124
	Operational Results	125
	Control Systems	126
	System Monitoring	128
	Remote Supervisory Control	128
	Automatic Control	128
	Costs	129
	Data Sources	129
	Updating and Transferability	130
	Economies of Scale	131
	Part III — MANAGEMENT ALTERNATIVES AND TECHNOLOGY	
VII	SOURCE CONTROL	135
	Quality Control Measures	135
	Solid Waste Management	136
	Street Cleaning	136
	Use of Chemicals	138
	Erosion Control	139
	Quantity and/or Rate Control Measures	140
VIII	COLLECTION SYSTEM CONTROL	145
	Sewer Separation	145
	General	145
	Detailed Analysis	148
	Conclusions	150
	Infiltration/Inflow Control	152
	Sources	152
	Inflow Control	152
	Infiltration Control	153

CONTENTS (Continued)

Section		Page
	Flushing and Polymer Injection	163
	Flushing	163
	Polymer Injection	165
	Regulators	168
	Conventional Designs	170
	Improved Regulator Designs	175
	Evaluation and Selection	183
	Remote Monitoring and Control	184
	System Components and Operations	186
	System Control	186
	Detailed Example	189
IX	STORAGE	196
	Types of Storage Facilities	197
	In-Line	197
	Off-Line	200
	Cost Data	213
X	PHYSICAL TREATMENT WITH AND WITHOUT CHEMICAL ADDITION	215
	Sedimentation	215
	Typical Combined Sewer Overflow Sedimentation Facilities	217
	Operation	218
	Costs	219
	Dissolved Air Flotation	220
	Introduction	220
	Design Criteria	222
	Demonstration Projects	227
	Advantages and Disadvantages	230
	Costs	231
	Screens	233
	Introduction	233
	Description of Screening Devices	234
	Description of Demonstration Projects	248
	Costs	252
	Filtration	254
	Introduction	254
	Design Criteria	254
	Demonstration Projects	254
	Advantages and Disadvantages	256
	Costs	256
	Concentration Devices	258

CONTENTS (Continued)

Section		Page
XI	BIOLOGICAL TREATMENT	259
	Introduction	259
	Application to Combined Sewer Overflow Treatment	260
	Contact Stabilization	262
	Description of the Process	262
	Demonstration Project, Kenosha, Wisconsin	262
	Advantages and Disadvantages	268
	Trickling Filters	268
	Description of Process	268
	Demonstration Project, New Providence, New Jersey	270
	Advantages and Disadvantages	274
	Rotating Biological Contactors	275
	Description of Process	275
	Efficiency	276
	Operational Considerations	276
	Design Parameters	279
	Advantages and Disadvantages	279
	Demonstration Project, Milwaukee, Wisconsin	281
	Treatment Lagoons	282
	Oxidation Ponds	287
	Aerated Lagoons	290
	Facultative Lagoons	296
	Demonstration Projects	298
	Costs	303
XII	PHYSICAL-CHEMICAL SYSTEMS	307
	Introduction	307
	Unit Processes	308
	Chemical Clarification	308
	Chemical Recovery	310
	Filtration	310
	Carbon Adsorption	311
	Activated Carbon Regeneration	314
	Performance of Physical-Chemical Systems	315
	South Lake Tahoe, California	317
	Ewing-Lawrence Sewerage Authority, Trenton, New Jersey	317
	Rocky River, Ohio	317
	Washington, D.C.	318
	Dallas, Texas	318
	Pomona, California	319

CONTENTS (Continued)

Section		Page
	Storm Flow Applications	320
	Albany, New York	320
	San Francisco, California	323
	Kingman Lake, Washington, D.C.	323
	Costs of Physical-Chemical Treatment	324
XIII	DISINFECTION	326
	Agents and Means	326
	Chemical Agents	326
	Physical Agents	331
	Mechanical Means	332
	Gamma Radiation	332
	Combined Sewer Overflow and Storm Sewer Discharge Disinfection	332
	Chlorination	333
	Alternatives to Chlorine Gas	336
	Ozonation	342
	Demonstration Projects	342
	New Orleans, Louisiana	342
	Ionics Hypochlorite Generator	343
	Cottage Farm Storm Detention and Chlorination Facility, Boston, Massachusetts	344
	Onondaga County, Syracuse, New York	345
	Philadelphia, Pennsylvania	346
	Costs	346
	Part IV — IMPLEMENTATION	
XIV	INTEGRATED SYSTEMS	353
	Interfacing with Dry-Weather Facilities	353
	Interfacing Unit Processes	356
	Mathematical Modeling Techniques	357
	Available Models	361
	Application of Mathematical Models	363
	Examples of Comprehensive Approach	363
	Example of "First Cut" Approach	366
	Master Plan Examples	367
	San Francisco, California	367
	Chicago, Illinois	370
	Boston, Massachusetts	373
	Seattle, Washington	374
	Washington, D.C.	375
	Environmental Compatibility	376
	Satellite Facilities	377
	Multiple-Use Facilities	379
	Total Planned Communities	381

CONTENTS (Continued)

Section		Page
XV	OPERATION AND MAINTENANCE	383
	Operating Controls and Options	385
	Sustaining (Dry-Weather) Maintenance	387
	In-Line Facilities	388
	Off-Line Facilities	391
	Practices for Improved Operation and Maintenance	393
	Maintenance Costs	394
	Support Facilities and Supplies	394
	Safety	396
	Solids Handling and Disposal	397
	Estimating Solids Removal	398
	Collection	402
	Ultimate Disposal	402
	Part V — REFERENCES, GLOSSARY, AND CONVERSION FACTORS	
XVI	REFERENCES	407
	Cited References	407
	Uncited References	423
XVII	GLOSSARY, ABBREVIATIONS, AND CONVERSION FACTORS	436
	Glossary	436
	Abbreviations	441
	Organizations	441
	Symbols	441
	Abbreviations	442
	Conversion Factors	445
XVIII	LIST OF PUBLICATIONS	446

FIGURES

No.		Page
1	Urban Stormwater Management Strategy	4
2	National Rainfall Frequency - Duration Experience: 1-Year 1-Hour Rainfall	43
3	National Rainfall Frequency - Duration Experience: 1-Year 24-Hour Rainfall	44
4	December 22, 1971 Frontal Storm Pattern, San Francisco	46
5	Rainfall Isohyets for Heat Island Showers, July 17-20, 1972, Washington, D.C.	47
6	Conceptual Computer Application for Master Drainage Planning for Water Quality Control	57
7	Relative Use of Combined Sewers in the United States	62
8	Relative Use of Combined Sewers by States	63
9	The Stormwater Problem - Combined Overflow Residuals	65
10	The Stormwater Problem - Beach Degradation	66
11	Effectiveness of Interceptors of Different Capacities for 1960, St. Louis, Missouri	72
12	Average Annual BOD_5 Contributed to the Roanoke River by Municipal Sewage	85
13	BOD_5 Contributed to the Roanoke River by Municipal Sewage During Maximum Yearly Rainfall Event	86
14	Street Collapse Due to Infiltration	94
15	Typical Sampling Units and Installations	107
16	Model for Automatic Operational Control System	127

FIGURES (Continued)

No.		Page
17	Construction Cost Trend	131
18	Stormwater Surface Detention Pond (Chicago)	142
19	Common Elements of an Interceptor and Transport System	146
20	Packer-Sealer with Two Inflatable Sections	163
21	Polymer Injection Station for Sanitary Sewer (Dallas)	167
22	Typical Early Type of Regulator	169
23	Typical Static Sewer Regulators	171
24	Typical Semiautomatic Dynamic Sewer Regulators	172
25	Typical Automatic Dynamic Sewer Regulator	174
26	Schematic Arrangement of a Fluidic Sewer Regulator	176
27	Vortex Regulator	177
28	Solids Separation Action in the Swirl Concentrator Hydraulic Model	179
29	Recommended Configuration for Swirl Concentrator	180
30	Spiral Flow Regulator	181
31	Elements of a Remote Control System (Seattle)	187
32	Typical Regulator Stations of In-Line Storage Systems	199
33	Detention Basin Plan, Chippewa Falls	201
34	Schematic of Detention Facilities, Akron, Ohio	202
35	Jamaica Bay (Spring Creek Auxiliary Water Pollution Control Plant) Retention Basin	204
36	Schematic of Humboldt Avenue Detention and Chlorination Facility, Milwaukee, Wisconsin	205
37	Humboldt Ave. (Milwaukee) Retention Basin	206
38	Schematic of Cottage Farm Detention and Chlorination Facility, Boston, Massachusetts	208
39	Cottage Farm (Boston) Detention and Chlorination Facility	209

FIGURES (Continued)

No.		Page
40	Deep Tunnel Concepts and Construction (Chicago)	211
41	Construction Cost Versus Design Capacity for Sedimentation	221
42	Schematic of Dissolved Air Flotation Facilities at Racine, Wisconsin	223
43	Dissolved Air Flotation Facilities (Racine)	224
44	Relationship Between Suspended Solids Removal and Saturation Tank Pressure	227
45	Construction Cost Versus Design Capacity for Dissolved Air Flotation, ENR 2000	232
46	Screenings from Mechanically Cleaned Bar Racks	235
47	Schematic of a Microstrainer or Drum Screen	236
48	SS Removal Versus Screen Opening	238
49	Rotary Fine Screen Schematic	244
50	Contact Stabilization Plant, Kenosha, Wisconsin	263
51	Combined Sewer Overflow Treatment by Contact Stabilization (Kenosha)	264
52	Trickling Filter Plant Schematic, New Providence, N.J.	272
53	Combined Sewer Overflow Treatment by High-Rate Trickling Filtration (New Providence)	273
54	Rotating Biological Contactor	275
55	The Effect of Removals with Varying Contact Times for Rotating Biological Contactors	278
56	Hydraulic Loading Versus Design BOD_5 Removals for Rotating Biological Contactors	280
57	Relationship of Removal Efficiency to the Organic Loading Rate for Rotating Biological Contactors	283
58	Combined Sewer Overflow Treatment Lagoons	285
59	Typical Oxidation Pond Outlet with Three Concentric Baffles to Reduce the Presence of Algae in the Effluent	291

FIGURES (Continued)

No.		Page
60	Types of Aerators	292
61	Reactions Found in Facultative Lagoons	296
62	Two Pond Configurations to Promote Anaerobic Zones and Decomposition of Settled Material	298
63	Schematic of Retention and Treatment Facilities, Including Porposed Modifications, Mount Clemens, Michigan	304
64	Flow Diagram of Clarification System	318
65	Physical-Chemical Treatment Pilot Plant, Washington, D.C.	319
66	Process Flow Sheet for Physical-Chemical Pilot Plant, Albany, New York	321
67	Ultraviolet Light Used as a Method of Disinfection	332
68	Chlorination Control System, Oakwood Beach Sewage Treatment Plant, New York City	337
69	Stability of Sodium Hypochlorite Solution	339
70	Hypochlorite Generating Plant for Stormwater Disinfection, New Orleans	340
71	Electrolytic Hypochlorite Generator	341
72	Schematic of Ozone Generation and Injection for Microstrainer Facility	347
73	Methods of Interfacing Stormwater Facilities with Existing Systems	355
74	San Francisco Master Plan Elements	369
75	Operational Schematic of the Recommended Pollution Control Plan for Chicago	371
76	Baker Street Dissolved Air Flotation Facility, San Francisco	378
77	Remote-Controlled Regulator Station, Seattle, Washington	379
78	Conceptual Plot Plan of Kingman Lake Water Reclamation Facility	380
79	Combined Sewer Overflow Collection and Treatment Facility, Mount Clemens, Michigan	381

FIGURES (Continued)

No.		Page
80	Stormwater Detention Facility (Boston): Before, During, and After Storm Event	384
81	Control Panel at the Cottage Farm Detention and Chlorination Facility (Boston)	385
82	Sludge Bank in Conner Street Sewer, Detroit	399
83	Flushing System, Red Run Drain, Detroit	400

TABLES

No.		Page
1	Generalized Quality Comparisons of Wastewaters	6
2	Computed Annual Discharges to Receiving Water for a Hypothetical City of 100,000	7
3	Summary of Storage Costs	11
4	Comparison of Physical Treatment Alternatives	13
5	Comparison of Biological Treatment Alternatives	14
6	Management Alternatives Summary	53
7	Predominant Type of Sewer System in the 20 Largest U.S. Cities, 1900 and 1970	62
8	Comparison of Dry- and Wet-Weather Flows in Separate Sanitary Sewers for Various Locations	68
9	Comparison of Annual Municipal Sewage Bypassed or Overflowed for Various Cities	73
10	Comparison of Quality Characteristics from First Flushes and Extended Overflows of a Combined Sewer, Hawley Road Sewer, Milwaukee, Wisconsin	76
11	Comparison of Quality of Combined Sewage for Various Cities	78
12	Comparison of Quality of Storm Sewer Discharges for Various Cities	80
13	Storm Sewer Discharge Quality from 15 Test Areas, Tulsa, Oklahoma	81
14	Storm Sewer Discharge Quality from a 5-Square Mile Urban Watershed, Castro Valley Creek, California	82
15	Comparison of BOD_5 from Combined Overflows, Storm Discharges, and Snow Melt, Des Moines, Iowa	83

TABLES (Continued)

No.		Page
16	Average Annual BOD_5 Contributed to the Roanoke River by Municipal Sewage, Roanoke, Virginia	85
17	BOD_5 Contributed to the Roanoke River by Municipal Sewage During Maximum Yearly Rainfall Event, Roanoke, Virginia	86
18	Estimated Annual Load of Pollutants Entering the Area Receiving Streams, Tulsa, Oklahoma	87
19	Field Test Results of Catch Basin Source Pollutants and Removals	92
20	Summary of Dry- and Wet-Weather Sandusky River Analyses, Bucyrus, Ohio	99
21	Relative Concentrations of Pollutants During Average Dry- and Average Wet-Weather Conditions, Roanoke, Virginia	101
22	Representative Commercially Available Samplers	111
23	Typical Flow Measurement Applications	117
24	BOD_5 Concentrations Versus Time from Start of Overflow, District of Columbia	120
25	Street Sweeper Efficiency Versus Particle Size	137
26	Estimated Costs of Sewer Separation in Various Cities	149
27	Sewer Separation Versus Conceptual Alternatives	151
28	Estimated Flushing Costs for Demonstration Project, Detroit, Michigan	165
29	Installed Construction Costs and Annual Operation and Maintenance Costs of Regulators	185
30	Typical CATAD Regulator Station Monitoring Hourly Log	192
31	Typical CATAD Pump Station Monitoring Hourly Log	193
32	Typical CATAD Water Quality Monitoring Hourly Log	193
33	Typical CATAD Storm Log	195

TABLES (Continued)

No.		Page
34	Summary of Storage Costs for Various Cities	214
35	Summary Data on Sedimentation Basins Combined with Storage Facilities	216
36	Cost of Stormwater Sedimentation Facilities	219
37	Dissolved Air Flotation Design Parameters	225
38	Typical Removals Achieved with Screening/ Dissolved Air Flotation	228
39	Summary of Performance Characteristics, Baker Street Dissolved Air Flotation Facility, San Francisco, California	230
40	Dissolved Air Flotation Cost for 25 Mgd	231
41	Classification of Screens	233
42	Microstrainer and Drum Screen Installations in the United States That Treat Combined Sewer Overflows	237
43	Data Summary on Microstrainers and Drum Screens	242
44	Recommended Microstrainer Design Parameters for Combined Sewer Overflow Treatment	244
45	Rotary Fine Screen Design Parameters	247
46	Characteristics of Various Types of Screens	249
47	Range and Level of Variables Tested	251
48	Cost of Microstrainers and Fine Screens for 25-Mgd Plants	253
49	Types of Filtration Processes Investigated for Combined Sewer Overflows	255
50	Design Parameters for Filtration Mixed Media, High Rate	257
51	Contact Stabilization Removals During 1972	265
52	Contact Stabilization Operating Parameters	267
53	Comparison of Low-Rate, High-Rate, and Ultrahigh-Rate Trickling Filters	269
54	Trickling Filter Removals, New Providence, New Jersey	274

TABLES (Continued)

No.		Page
55	Rotating Biological Contactors--Variations in Removals Resulting from Flow Increases of 10 Times Due to Wet Weather	277
56	Rotating Biological Contactor Design Parameters	280
57	Removals Reported in Pilot-Plant Studies of Rotating Biological Contactors, Milwaukee, Wisconsin	282
58	Comparison of Different Types of Lagoons Treating Storm Flows for Various Cities	284
59	Removal Efficiencies of Treatment Lagoons for Various Cities	286
60	Methods of Reducing Algae in the Oxidation Pond Effluent	290
61	Oxidation Pond Design Parameters	291
62	Types of Aeration Equipment for Aerated Lagoons	293
63	Aerated Lagoon Design Parameters	295
64	Facultative Lagoon Design Parameters	299
65	Capital and Operation and Maintenance Costs for Biological Treatment	305
66	Cost for Oxidation Ponds to Treat 25 Mgd of Overflow	306
67	Achievements of Chemical Clarification	309
68	Illustrations of Varying Media Design for Various Types of Floc Removal	312
69	Examples of Filter Performance	312
70	Operating Data of Physical-Chemical Treatment Plants for Various Cities	315
71	Performance Data of Physical-Chemical Treatment Plants for Various Cities	316
72	Estimated Capital and Operation and Maintenance Costs for Typical Physical-Chemical Treatment Plant	324

TABLES (Continued)

No.		Page
73	Removal or Destruction of Bacteria by Different Wastewater Treatment Processes	327
74	Comparison of Ideal and Actual Chemical Disinfectant Characteristics	328
75	Comparison of Data on Disinfection Devices	335
76	Chemical Disinfection Agents and Sources Used by Various Cities for Combined Sewer Overflows and Storm Sewer Discharges	338
77	Cost Data on Chlorine Gas and Hypochlorite Disinfection	348
78	Estimated Costs of Tertiary Treatment Plants Using Ozone	349
79	Comparison of Estimated Capital Costs for 3 Different Disinfection Methods	350
80	Interfacing Storm Flow Facilities with Existing Sewerage System	358
81	General Interfacing Between Types of Storage and Treatment Devices	360
82	General Data Requirements, Stormwater Management Model	364
83	Comparison of Master Plans and Projects in Various Cities	368
84	Examples of Combined Sewer System Operation Controls	387
85	Sludge Production and Solids Disposal Methods for Various Treatment Processes	401

ACKNOWLEDGMENTS

A great deal of cooperation has been received during the conduct of this project. Metcalf & Eddy, Inc., gratefully acknowledges the cooperation and direct participation of key personnel from the headquarters and regional offices of the EPA and of all the municipalities contacted and their consultants.

Especially acknowledged is the leadership and assistance of Richard Field, Chief of the Storm and Combined Sewer Technology Branch, National Environmental Research Center--Cincinnati, EPA, Edison, New Jersey, who was the Project Officer; and of Anthony N. Tafuri, Staff Engineer.

Project assistance and report reviews were provided by Dr. George Tchobanoglous, Consultant, and Marcella Tennant, Technical Editor. Consultants Henry S. Brietrose and Ronald Alexander advised on the film contracting and general content.

Film direction and production was by Veriation Films, Palo Alto, California (Robert Moore, Director; Stephen Longstreth, Writer; and David Espar, Photography).

This project was conducted under the supervision and direction of John A. Lager, Project Director, and William G. Smith, Project Engineer. Portions of the report were written by Howard L. Hoffman, Michael K. Mullis, and C. David Tonkin. Denny K. Tuan assisted in the literature search.

Part I

CONCLUSIONS, RECOMMENDATIONS, AND INTRODUCTION

Section I

CONCLUSIONS

Control and/or treatment of storm sewer discharges and combined sewer overflows is a major problem in the field of water quality management. Over the past decade much research effort has been expended and a large amount of data has been generated, primarily through the actions and support of the U.S. Environmental Protection Agency's (EPA) Storm and Combined Sewer Technology Research, Development, and Demonstration Program.

A comprehensive investigation and assessment of promising, completed, and ongoing projects, representative of the state-of-the-art in abatement theory and technology, has been accomplished in this study. The results, reported herein, are presented as a compendium of project information on management and technology alternatives within a framework of problem identification, evaluation procedures, and program assessment and selection.

Critical elements in developing a strategy for urban stormwater management are shown on Figure 1. Highlights of the more important assessments and data with respect to these elements developed or exposed during the course of the study are presented in the following conclusions.

THE STORMWATER PROBLEM

- Essentially every metropolitan area of the United States has a stormwater problem, whether served by a combined sewer system (approximately 29 percent of the total sewered population) or a separate sewer system.

- The problem is best quantified when discharges are compared on the basis of mass loadings released over discrete periods of time encompassing one or several consecutive storm events. In many cases, however, aesthetics or beneficial uses (such as maintaining

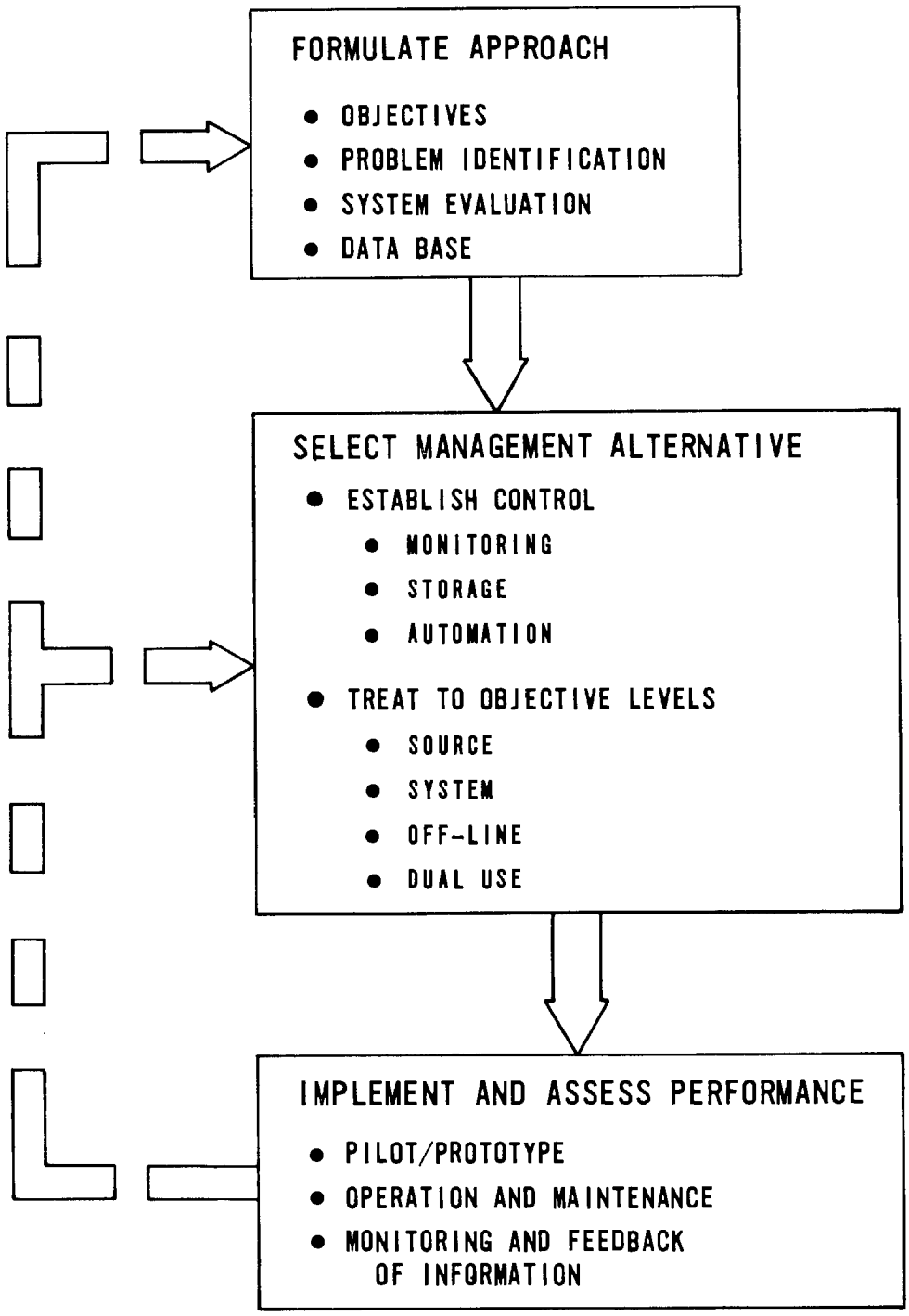

Figure 1. Urban stormwater management strategy

receiving water quality above body contact use standards) are of primary concern.

- Each metropolitan area should therefore be directly involved in setting its goals and objectives for embarking upon a stormwater management program.

- Desktop analyses alone necessarily have limited applicability, and a locally developed real data base is essential. Recognizing that the effort will require from one to several years, sampling and monitoring should be initiated at the earliest practicable time.

- The tools for reducing stormwater pollution, in the form of demonstrated processes and devices, do exist providing many-faceted approach techniques to individual situations. These tools are constantly being increased in number and improved upon as a part of a continuing research and development program guided by the EPA.

Relative Magnitude

- The stormwater problem involves three types of discharges: (1) combined sewer overflows, (2) surface runoff either collected separately or occurring as nonsewered runoff, and (3) overflows of infiltrated municipal sewage resulting from precipitation.

- Of the three types of discharges, the combined sewer overflows and overflows of infiltrated municipal sewage have similar characteristics, with 5-day biochemical oxygen demand (BOD_5) loadings averaging approximately one-half the strength of *untreated* domestic sewage. This contrasts with surface runoff from urban areas which has a BOD_5 approximately the strength of secondary effluent. A generalized comparison of the major quality parameters is summarized in Table 1.

- It has been suggested in several studies that chemical oxygen demand (COD) is a more representative measure of comparison, but its widespread adoption is handicapped by its limited data base. COD has the advantages of simpler testing procedures and greater resistance to toxic materials found in urban runoff.

- The major constituent of street runoff has been found to be suspended and settleable solids--primarily inorganic, mineral-like matter, similar to sand and silt. Along with this material there is organic matter, algal

Table 1. GENERALIZED QUALITY COMPARISONS OF WASTEWATERS

Type	BOD_5, mg/l	SS, mg/l	Total coliforms, MPN/100 ml	Total nitrogen, mg/l as N	Total phosphorus, mg/l as P
Untreated municipal	200	200	5×10^7	40	10
Treated municipal					
Primary effluent	135	80	2×10^7	35	8
Secondary effluent	25	15	1×10^3	30	5
Combined sewage	115	410	5×10^6	11	4
Surface runoff	30	630	4×10^5	3	1

Source: Data condensed from Tables 12 and 13, Section V. Values based upon flow-weighted means in individual test areas.

nutrients, coliform bacteria, heavy metals, and pesticides. Significantly, the latter are largely concentrated in the very fine material (< 43 microns) limiting the pollution abatement effectiveness of conventional street sweeping operations and catch basins.

- Bacterial contamination of combined sewage is "typically" 1 order of magnitude lower, and surface runoff 2 to 4 orders of magnitude lower, than that of untreated municipal sewage. Significantly, however, the concentrations are 2 to 5 orders of magnitude *higher* than those considered safe for water contact activities.

Mass Loadings

- Mass loadings represent the product of quantity and concentrations. They are of prime importance in storm-water analyses because of the high volume of storm induced flows. For example, rates of urban runoff from an average storm intensity of 0.25 cm/hr (0.10 in./hr) may be expected to be about 5 to 10 times the dry-weather flow contribution from the same area. Similarly, a not uncommon rainfall intensity of 2.5 cm/hr (1.0 in./hr) will produce flow rates of 50 to 100 times the dry-weather flow.

- The relative impact of the stormwater problem in terms of mass loadings (in this case on an annual basis) is illustrated in the hypothetical comparison in Table 2. The assumptions represent a hybrid of statistical data on municipalities and are thought to be, in a general sense, representative. In Case 1 the pollution as measured by BOD_5 is dominated by combined sewer overflows, assuming secondary treatment to be in effect for dry-weather flows. On the other hand, if only primary treatment were provided, the positions would be reversed with dry-weather discharges accounting for approximately 65 percent of the annual loading. Case 2 is an illustration of what might be accomplished through a sewer separation program: the reduction of the annual BOD_5 discharged by approximately 44 percent but with an accompanying increase in suspended solids (SS) discharged.

Table 2. COMPUTED ANNUAL DISCHARGES TO RECEIVING WATER FOR A HYPOTHETICAL CITY OF 100,000

Item description	Flow, mil gal.	BOD_5, 1,000 lb/yr	SS, 1,000 lb/yr
Case 1 – Sewered on combined plan			
Municipal effluent			
Dry weather	3,600	750	450
Intercepted wet weather	300	60	40
Combined sewer overflows	2,100	2,000	7,180
Total	6,000	2,810	7,670
Case 2 – Sewered on separate plan			
Municipal effluent			
Dry weather	3,600	750	450
Infiltrated municipal overflows	300	290	1,020
Storm sewer discharges	2,100	530	11,030
Total	6,000	1,570	12,500

Assumptions

Population density – 20 persons/acre
Degree of treatment of municipal flows – secondary (100 gcd)
Average annual rainfall – 33 in. during 760 hr
Runoff coefficient – 0.5
Flow-weighted mean concentrations – from Table 1
Effective interceptor/treatment capacity = 2.0 x dry-weather flow

Note: mil gal. x 3.785 = Ml
lb x 0.454 = kg
acre x 0.405 = ha
in. x 2.54 = cm

- Since combined sewer overflows represent a comingling of surface runoff and municipal sewage, the difference between the BOD_5 released in Case 1 and that in Case 2 represents (1) direct losses of municipal sewage and (2) scouring of pollution from the combined collection system. Assuming 90 percent of the municipal sewage is lost to the receiving waters without treatment during periods of rainfall, this loss would account for 7.8 percent (0.9 x 760/8,760 = 0.078) of the annual BOD_5 loading in the untreated municipal sewage, or approximately 216,000 kg/yr (475,000 lb/yr). The remaining 347,000 kg/yr (765,000 lb/yr) would therefore be attributed to the scoured deposits, frequently termed the "first flush" effect.

Variability

- Stormwater characteristics are highly variable, exhibiting changes of 10 to 1 or more in a single storm, from area to area and from one storm to the next.

- Higher concentrations of pollutants are generally expected under the following conditions: the early stages of a storm (including so-called first flush effects); in more densely settled and/or industrialized areas; in response to high rainfall intensities; after prolonged dry periods; and in areas with construction activities (inorganic solids). Conversely, concentrations tend to be lower as a storm progresses and in the latter storms of a closely spaced series.

- The storm path and collection system configuration may have an additional pronounced influence on the quality of combined sewer overflows. On the basis of system hydraulics and regulator efficiencies, discharge mixtures from neighboring outfalls may vary simultaneously from totally raw municipal sewage to dilute surface runoff.

DESIGN CONSIDERATIONS

- Because of the intermittency and extreme variability of combined sewer overflows or storm sewer discharges in both flows and loadings, there is no such thing as an "average" design condition for stormwater treatment and control facilities. Therefore, a unit operation or process that performs only *when conditions are right* may be too restrictive for practical applications.

- Simplified mathematical models based upon the general storage equation and operated off real (continuous)

rainfall data provide an excellent tool for equating the effectiveness of alternative storage volumes and treatment rates.

- Although precise characterization is virtually impossible, nominally accurate flow measurement (say 5 to 15 percent) and direct-reading remote sensing of quality characteristics are necessary adjuncts to integrated system design and management.

- The magnitude, debris content, and brute force of storm flows are major design constraints that limit options for centralization (because of high transmission costs) and the applicability of sophisticated and complex equipment.

- In assessing the performance of past projects, the project scale (both overall capacity and equipment), pretreatment controls, and location with respect to maintenance and supervisory services are critical factors in the credibility, applicability, and reliability of the processes.

- Control and treatment of stormwater introduce many unique operation and maintenance requirements. These include automated control, startup and shutdown procedures, maintenance and surveillance between storms, and solids handling and disposal.

- Control and treatment facilities should be designed to permit total system test operations during dry-weather periods without incurring adverse discharges to the receiving waters.

- Programs must be scaled and implemented with full recognition given to the limitations in the available data and the relative immaturity of the state-of-the-art.

MANAGEMENT ALTERNATIVES

Management alternatives for stormwater pollution abatement in this text have been categorized into four application areas: source control, collection system control, storage and treatment, and integrated (complex) systems.

Source Control

- Source controls are defined as those measures for reducing stormwater pollution that involve actions within the urban drainage basin before runoff enters the

sewer system. Examples include surface flow attenuation, use of porous pavements, erosion control, chemical use restrictions, and improved sanitation practices (street cleaning, more frequent refuse pickup, etc.).

- Benefits may include reduced costs per quantity of pollutant removed, improved neighborhood cleanliness, reduced flooding, area beautification, etc.

- In a recent survey, the practice of surface detention for urban runoff control was concluded to be a very effective means of handling runoff, reducing downstream flooding and drainage costs, and, often, improving aesthetics and recreational facilities.

- Demonstration of the effective incorporation of source controls in urban planning is found in Columbia, Maryland; Du Page County, Illinois; and a planned community being developed near Houston, Texas.

Collection System Control

- Collection system control, as used in this text, includes all alternatives pertaining to collection system management or alteration. Examples include inflow/infiltration control, the use of improved regulator devices, temporarily increased line-carrying capacities using polymer (friction reducing) flow additives, sewer separation, and the use of remote monitoring/control systems.

- Detailed knowledge of how collection systems respond to wet-weather flows is almost universally lacking in municipalities today. As a result, demonstration projects frequently reveal relief points and crossovers critical to proper functioning that were not known to exist prior to the project. Such conditions place great emphasis on the need for early and intensive monitoring and modeling for predictive responses.

- System controls using in-line storage represent promising alternatives in areas where conduits are large, deep, and flat (i.e., backwater impoundments become feasible), and interceptor capacity is high. Reported costs for storage capacity gained in this manner range from 10 to 50 percent of the cost of like off-line facilities. Because system controls are directed toward maximum utilization of existing facilities, they rank among the first of alternatives to be considered.

- It is reported that up to 45 percent flow augmentation was achieved through the use of friction reducing additives in a closed conduit during periods of peak runoff, thereby eliminating overflows of combined sewage.

- The concept of constructing new sanitary sewers to replace existing combined sewers largely has been abandoned because of the enormous cost, limited effectiveness, inconvenience to the public, and extended time required for implementation.

Storage and Treatment

Storage –

- Storage is perhaps the most cost-effective method available for reducing pollution resulting from overflows of combined sewage and to improve management of urban runoff. It is the best documented abatement measure in present practice. Representative project costs are listed in Table 3.

Table 3. SUMMARY OF STORAGE COSTS

Location	Type	Capacity, mil gal.	Cost $/gal.
Oak Lawn, Ill.	Surface detention	53.7	0.03
Seattle, Wash.	In-line	32.0	0.23
Chippewa Falls, Wis.	Open, lined basin	2.8	0.26
Jamaica Bay, N.Y.	Covered basin	10.0	2.12
	Basin plus sewer	23.0	0.92
Milwaukee, Wis.	Buried basin	4.0	0.50
Akron, Ohio	Buried-void space	0.7	0.62
Boston, Mass.	Buried, short detention	1.3	4.74[b]
Chicago, Ill.	Open quarry	2,736.0	0.21
	Tunnels and appurtenances	2,834.0	0.27

a. ENR = 2000.

b. Includes influent pumping station, chlorination facilities, and outfall.

Source: Table 34, Section IX.

Note: mil gal. x 3.785 = Ml
$/gal. x 0.264 = $/l

- Storage facilities possess many of the favorable attributes desired in stormwater treatment: (1) they may be used to provide flow equalization or attenuation and, in the case of tunnels, flow transmission; (2) they respond without difficulty to intermittent and random storm behavior; (3) they are relatively unaffected by flow and quality changes; and (4) frequently, they can be operated in concert with regional dry-weather flow treatment plants for benefits during both dry- and wet-weather conditions.

- Storage facility variations include concrete holding tanks, open basins, tunnels, underground and underwater containers, underground "silos," granular packed beds (void space storage), and the use of abandoned facilities and existing sewer lines.

- Disadvantages of storage facilities include their large size, high cost, and dependency on other treatment facilities for processing the retained water and settled solids.

Physical Treatment With and Without Chemical Addition –

- Physical treatment processes are well suited to stormwater applications in many ways, particularly with respect to SS removal. These processes include sedimentation, dissolved air flotation, screening (coarse, fine mesh, and micro), filtration, and swirl concentration. Representative cost, loading, and efficiency data are shown in Table 4.

- Removal efficiencies for the physical processes tend to vary directly with the influent contaminant concentrations yielding relatively constant effluent results. Thus, instantaneous removal efficiencies lose their significance; an improved basis of comparison is mass loadings applied versus those discharged.

- While the availability of full-scale field data for storm flow applications is limited at the present time, projects now operating or under construction will soon greatly enhance the data base available to designers. Notable are the dissolved air flotation facilities in Racine, Wisconsin, and San Francisco, California; the chemical clarification facilities in Dallas, Texas; and two projects providing parallel full-scale testing of alternative screening units in Fort Wayne, Indiana, and Syracuse, New York. Screening devices to be tested include fine screens, rotary fine screens, hydraulic sieves (static devices), and microstrainers.

Table 4. COMPARISON OF PHYSICAL TREATMENT ALTERNATIVES

Process	Design loading rate	Estimated removal, %		Capital cost, $/mgd[a]
		BOD_5	SS	
Dissolved air flotation[b] (split flow)	3,200 gpd/sq ft	40	60	35,000
Dissolved air flotation[b] (split flow) with chemical addition	25 mg/1	52	78	--
Microstrainer (20-60 microns)	30 gpm/sq ft	10-50	70	11,000
Fine screen (100-600 microns)	50 gpm/sq ft	15	40	7,800
Ultrahigh rate[b] filtration	24 gpm/sq ft	40	65	63,000[c]
Ultrahigh rate[b] filtration with poly-electrolyte addition	1-2 mg/1	65	94	--
Chemical clarification using waste lime sludge	2,570 gpd/sq ft	60	60	54,000

a. Based on 25-mgd facility.

b. Includes ultrafine screens as pretreatment.

c. Extrapolated from pilot scale data.

Note: gpd/sq ft x 0.283 = cu m/min/ha
gpm/sq ft x 0.679 = l/sec/sq m
mgd x 3.785 = Ml/day

- Concentration devices, typified by the swirl concentrator and helical or spiral flow devices, have introduced an advanced form of sewer regulator--one capable of controlling both quantity and quality. These devices take advantage of secondary fluid motions and natural liquid/solids separation in bends and other forms of rotational flow to split storm flow into a low volume concentrate and a high volume, relatively clear stream. Prototype swirl regulators are under construction in Lancaster, Pennsylvania, and Syracuse, New York. A third unit has been placed into operation for sewage grit separation in Denver, Colorado. Settleable solids removals ranging from 65 to more than 90 percent, corresponding to chamber retention times in the order of 5 to 15 seconds, have been predicted on the basis of model tests. Indicated costs are approximately $285/cu m/sec ($6,500/mgd). Swirl devices are being developed for primary treatment; having the potential for more effective treatment than conventional sedimentation at only 1/12th the detention time.

Biological Treatment –

- Biological treatment of wastewater, used primarily for domestic and industrial flows, produces an effluent of high quality at comparatively low cost. For treatment of storm flow, however, the following are serious drawbacks: (1) the biomass used to assimilate the waste constituents must either be kept alive during times of dry weather or allowed to develop for each storm event; and (2) once developed, the biomass is highly susceptible to washout by hydraulic surges and organic overload.

- Examples of biological treatment applications to stormwater include (1) the contact stabilization modification of activated sludge, (2) high-rate trickling filtration, (3) bioadsorption using rotating biological contactors, and (4) oxidation lagoons of various types. The first three are operated conjunctively with dry-weather flow plants to supply the biomass, and the fourth use approaches total storage of the flows (representative detention times of 1 to 10 days). A comparison of the alternatives is shown in Table 5.

Table 5. COMPARISON OF BIOLOGICAL TREATMENT ALTERNATIVES

Process and design flow	Design loading rate	Estimated removal, %		Capital cost, $/mgd
		BOD_5	SS	
Contact stabilization modification of secondary plant (20 mgd)	108 lb BOD_5/1,000 cf	83	92	78,300
High rate trickling filter modification of secondary plant (6 mgd)	Plastic media, 40 mgad; rock media, 12 mgad	65	65	79,100
Rotating biological contactor[b] (10.4 mgd)	5-15 lb BOD_5/day/1,000 sq ft	54	70	30,000
Treatment lagoons (0.3 to 2.2 mgd)	10 days' retention	40-90	50-60	43,000 to 55,000

a. Data based on single installations.

b. Includes cost of final clarifier.

Note: lb/1,000 cf x 16.077 = g/cu m
mgad x 9.357 = l/day/ha
lb/day/1,000 sq ft x 4.88 = kg/day/1,000 sq m
mgd x 3.785 = Ml/day

- Biological process applications severely restrict allowable flow and/or loading variations. For example, in the projects cited in Table 5, the contact stabilization modification was limited to 2 to 3 times the dry-weather flow; the trickling filter application, to 5 to 10 times the dry-weather flow; and the biological contactor, to 5 to 10 times the dry-weather flow.

- Dual-use principles were effectively demonstrated in the first two cases in Table 5 in that the wet-weather plant additions were used to advantage during dry-weather periods for upgrading treatment performance. This capability should be exploited in all storm flow management strategies.

Physical-Chemical Treatment –

- Physical-chemical treatment is becoming competitive in cost with biological treatment, especially where significant phosphorus removal is required. Physical-chemical processes are of particular importance to storm flow treatment because of their adaptability to automated operation, rapid startup and shutdown characteristics, and very good resistance to shockloads.

- The most promising combination of unit processes appears to be chemical clarification followed by filtration and adsorption on activated carbon.

- Drawbacks to physical-chemical treatment include high initial costs, high rates of chemical consumption, and increased sludge (by dry weight) to be disposed of.

- A unique variation of the usual coagulation-adsorption process was applied in a pilot demonstration in Albany, New York. Both powdered carbon and coagulants were added in a static mixing-reaction pipeline, and the resultant coagulated matter was flocculated downstream, separated by tube settlers, and polished by multi-media filtration. BOD_5 and SS removals of 94 and 99 percent, respectively, were achieved. A prototype facility was estimated to cost $39,000/Ml ($146,000/mgd) based upon a capacity of 94 Ml (25 mgd).

Disinfection –

- Because the disinfectant and contact demands are great in storm flow applications, current research centers on (1) high-rate applications, (2) use of alternative disinfectants with reduced toxicity residuals and high

reaction rates, and (3) on-site generation of disinfectants.

- It was recently reported that satisfactory disinfection of a combined sewer overflow was attainable with contact times as short as 2 to 4 minutes (versus conventional practice of 10 to 15 minutes) using a chlorine concentration of 5 mg/l. These results were obtained on microstrainer effluent in a specially designed contact tank using parallel corrugated baffles to provide high mixing intensities.

- Effluent bacteria requirements of 1,000 total coliforms/100 ml and 200 fecal coliforms/100 ml were reached in another bench-scale application on microstrainer effluent in contact times of 60 seconds or less using 25 mg/l chlorine or 12 mg/l chlorine dioxide in a single-stage disinfection process, or 8 mg/l chlorine and 2 mg/l chlorine dioxide in a two-stage disinfection process.

- Other disinfectants under study in the stormwater program include sodium hypochlorite and ozone.

- An on-site sodium hypochlorite generation plant has been constructed in New Orleans capable of producing 75,700 l (20,000 gal.) of hypochlorite per 8-hour day. Estimated production cost is $0.05/kg ($0.12/lb) of available chlorine.

Integrated (Complex) Systems

- The most promising approaches to urban storm flow management involve the integrated use of control and treatment systems with an areawide, multidisciplinary (water use, land use, wet- and dry-period discharges, etc.) perspective.

- Storm flow treatment processes can be most effectively used following some form of storage (flow equalization). This yields not only longer running periods, reduced shock effects, and buffer flexibility for startup and shutdown, but also, frequently, lower overall costs.

- Resort to mathematical model usage is ultimately essential to problem comprehension and effective program implementation because of the myriad conditions and alternatives encountered. Model use in the initial program planning process is likewise highly beneficial.

- Mathematical models have been developed and successfully applied, at many levels of sophistication and complexity, to the solution of stormwater management problems. These models vary from simple "mass-diagram" balances of runoff, storage, treatment, and overflows to those capable of representing the whole gamut of urban stormwater runoff phenomena (including both quantity and quality).

- Programs developed in the conception/design phases of a project can form the basis for real-time decision-making in prototype operations to maximize countermeasures to abate pollution.

- In San Francisco studies it was concluded that combined sewer overflows occur during rainfall intensities greater than 0.02 in./hr (90 percent of all storm time). It was further concluded, however, that the concept of constructing combined sewers should be retained and that storage and treatment facilities should be constructed so that no more than 8 overflows will occur in each year. By such action, control would be achieved on up to 90 percent of the annual combined sewer overflow discharges at a cost of $42,400/ha ($17,180/acre). This represents approximately 40 percent of the estimated cost of separating existing combined sewers.

- Integrated approaches are notably demonstrated by the comprehensive master plans developed in Chicago and San Francisco; by the remote monitoring and control systems of Seattle, Minneapolis-St. Paul, and Detroit; by the beneficial-use oriented programs of Mount Clemens, Michigan; the Kingman Lake reclamation concept for Washington, D. C.; and the planned community approaches at Woodlands, Texas, and Columbia, Maryland--to name a few. All of these approaches demonstrate clearly man's capability to meet the challenge of this new technology and, in so doing, greatly improve his habitat.

Section II

RECOMMENDATIONS

Recommendations, developed during this study to guide future actions, are grouped into four categories dealing with: (1) evaluations and planning, (2) control, (3) treatment, and (4) impact.

EVALUATIONS AND PLANNING

- Standardized procedures should be developed and implemented in the characterization of wet-weather discharges and control/treatment process evaluations.

- Greater emphasis now should be placed upon the total impact of projects as opposed to optimizing devices for a presumed set of criteria. In this regard, four primary guides are recommended for weighing future performance evaluations:

    1. Reliability/durability based upon the frequency of total and partial unit operations to the total number of continuous storm events.

    2. Efficiency as measured by the total mass of pollutants removed by the facility as a percentage of the total mass applied over the complete storm event including upstream bypasses.

    3. Effluent quality as measured by the average and maximum concentrations measured in the discharge.

    4. Dual use as measured by the effective utilization of the facility during non-storm periods.

- Development and application of direct-reading remote sensors should be stressed, particularly with respect to organic and solids concentrations. Correlations

should be developed between remotely sensed parameters and commonly used design and system operation parameters.

- Improved capability for remotely sensing flow rates in large conduits in an economic manner should be developed. Also, improved portable flowmeters and flow proportional samplers for limited studies and infiltration analyses are a priority need. Units should be capable of measuring both open channel and surcharged flows and should not be damaged by sitting idle for extended periods when there is no discharge or by characteristic debris and should not obstruct flow.

- Planning processes for stormwater management should encompass the three-phase strategy program outlined in Section I (Figure 1): (1) formulating an approach, (2) selection of management alternative, and (3) implementation and assessment of performance.

- Municipalities should move ahead now to assess and then attack their stormwater problem. First-phase actions should include at a minimum:

    1. Initial consensus on objectives and goals.

    2. Identification of the existing collection/treatment system reaction to storm events, singling out key indicator locations.

    3. Installation and operation of monitoring, measuring, and sampling equipment at selected key locations with provisions for automatic starting under wet-weather flows.

    4. Characterizing rainfall behavior and receiving water response based upon historical data and initiating new programs where necessary.

    5. Becoming directly involved in the new technologies surrounding urban stormwater management.

- In management plan selection procedures, the many-faceted approaches available should be weighed with emphasis upon first establishing control over the flows and then treating to the objective degree.

- Program implementation should be staged so as to provide prototype flexibility and maximum feedback of real experience as input to subsequent designs and planning.

CONTROL

- Intensive demonstration projects should be undertaken in typical urban areas to explore the maximum benefits to be derived from the application of source controls. At least one year's monitoring of unimproved conditions should precede the implementation of new practices to allow the development of adequate baseline criteria.

- Similar projects should be undertaken to identify the benefits derived from the use of collection system controls such as: periodic sewer flushing, improved catch basin design and/or maintenance, inflow/infiltration controls, improved regulators (fluidic controls and swirl concentrators providing both quantity and quality separation), etc.

- Studies should be undertaken to determine the effects of short- and long-term storage of stormwater runoff and combined sewage overflows with respect to hazards, nuisance, and treatability. Both in-line and off-line conditions should be studied.

- The degree and impact of control facilities should be included in every predesign analysis for storm flow treatment. Benefits gained may include increased reliability, greater flexibility, more sustained operations, lower required treatment capacity, and lower overall cost.

- Increased emphasis should be placed on the further development and use of mathematical models as primary planning and design aids. Models should be used to maximize the *total* integrated system approach, including basinwide planning and standards.

- Automatic controls, including backup systems, should be used in most, if not all, urban storm flow management systems to provide at a minimum for positive startup, emergency shutdown, and monitoring.

TREATMENT

- Greater emphasis should be placed on the design and use of storm flow treatment facilities to augment dry-weather flow treatment when not required for storm flows. For example, microstrainers and/or multi-media filters could be used for storm flow treatment in wet weather and for effluent polishing, increased capacities, and equipment backup in dry weather.

- Prototype projects on actual storm and/or combined sewer overflows should be undertaken to demonstrate the feasibility of the following key process alternatives:

    1. Dual-media filtration with and without polyelectrolyte feed with ultrafine screening as pretreatment.

    2. Physical-chemical treatment for stormwater reclamation and reuse.

    3. Rotating biological contactors followed by clarification.

    4. High energy gradient chlorine contact chambers.

    5. Rapid oxidants for short period disinfection.

- Prototype projects now underway should be carefully screened and data published (annually) in the form of a state-of-the-art supplement. Major processes in this category include:

    1. Swirl concentrators.

    2. Biological processes (contact stabilization, high-rate trickling filtration, treatment lagoons).

    3. Screening with dissolved air flotation.

    4. Fine screening, static screens, rotating fine screens.

    5. Microstrainers.

    6. Sedimentation.

    7. Disinfection and on-site generation of oxidants.

- Studies of the solids resulting from various storm flow treatment methods should be undertaken. Such studies should be aimed at characterizing and quantifying the solids removed during treatment and determining the handling and disposal alternatives available. Particular emphasis needs to be placed on the potential impact of solids derived from storm flow on dry-weather flow facilities if these are to be used jointly.

- Studies on the means and benefits of increasing the diversion of wet-weather flows to dry-weather plants and the impact of the increased flows on plant performance need to be undertaken on the basis of interim as well as long-term solutions.

- Further demonstrations are required on the upgrading of dry-weather plants to handle increased wet-weather flows through temporary process modifications or supplements.

- The practical application of multiple satellite storm flow treatment plants and their non-storm beneficial use should be further demonstrated.

IMPACT

- The monitoring of receiving water quality, both during and following storms, should be intensified and the data used to improve gross evaluations of the impact of wet-weather discharges. Again, *continuous* remote sensing is highly desirable.

- The development of stormwater abatement alternatives should stress the concept of multiple-use facilities. For example, the previously mentioned integrated use of stormwater facilities with dry-weather plants as backup and/or increased treatment capability, the direct integration with recreational facilities, the use of underground construction to reserve the surface for public facilities, etc., would provide attendant benefits.

- Prototype projects demonstrating the reuse potential of stormwater should be further emphasized and implemented.

- Through educational programs, increased awareness should be fostered on the part of engineers, administrators, and the public on stormwater discharge and combined sewer overflow problems, technology, and abatement programs. To aid in this effort a 30-minute narrated documentary color film has been produced as a part of this study for distribution by EPA for public showings before concerned groups.

Section III

INTRODUCTION

Precipitation falling on urban areas becomes contaminated as it enters and passes through or within the environment. The sources of this contamination are the air (smog, dust and particulate matter, vapors, gases, etc.), building and/or ground surfaces, and residues deposited by previous storm and/or municipal sewage flows within the storm or combined sewers. After passing through the environment, stormwater, with or without municipal sewage picked up in transit, is usually discharged to a receiving water body, such as a lake, a stream, an estuary, or an ocean. There the pollutants in the stormwater are decomposed (nonconservative), accumulated (conservative), or transported downstream.

During the next decade, it is expected that billions of dollars will be spent in the United States to combat the degradation of streams and other water bodies by pollutants released through storm discharges and combined sewer overflows. The EPA is therefore directing or assisting in multiple research and development programs and investigations to identify, control, and correct the causes of known problems relating to these storm occurrences.

This text was designed, in part, to fulfill the present need for a compilation and listing of the available literature concerning storm sewer discharge and combined sewer overflow treatment and control. There has been a definite lack of concise, comparative information on past project results, presented in a single document, especially with respect to (1) the cost of treatment and control systems, (2) the performance of such systems, and (3) the assessment of the various project criteria and goals. Rapid information retrieval for evaluating past projects has been severely hampered by the volume and availability of literature.

This text on the state-of-the-art contains the results of an extensive literature review along with current updated information and evaluations concerning the various EPA demonstration projects and many others. This compendium of stormwater technology should assist designers, administrators, educators, and prospective extramural project applicants as well as those who must review the projects.

OBJECTIVE AND SCOPE

The objective of this text is to identify and assess existing and available techniques of controlling and/or treating urban runoff and combined sewer overflows in an environmentally acceptable manner and to guide those responsible for developing and implementing corrective action.

The scope of this text includes the following with respect to management alternatives:

1. Sewer separation, its functions, purposes, limitations, and true perspective based on modern technology.

2. Control and/or treatment capabilities of facilities intended to function as alternatives to sewer separation.

3. New developments in sewer construction, repairs, and usage.

4. Basis for design.

5. Levels of treatment efficiency to be expected from unit processes or from typical combinations of treatment and/or control processes.

6. Types and ranges of pollutant most amenable to removal or conversion.

7. Mathematical modeling techniques for "predictive" and "decision-making" purposes.

8. Flow measurement methods and sampling devices.

9. Economic evaluations.

10. Facilities and systems application assessment.

METHOD OF PRESENTATION

This text has been arranged to facilitate its use as a solution-oriented reference source. As a result, the individual sections making up the main body have been sequenced along the lines of a typical control/treatment implementation strategy.

The Conclusions, Recommendations, and Introduction are presented in Sections I, II, and III, respectively. Together they form Part I of the text. Background information is provided within the introduction on the EPA Research, Development, and Demonstration Program, the emerging nationwide emphasis on stormwater problems, and the importance of uniform nomenclature and terminology.

The next three Sections are grouped as Part II, Formulating an Approach. A guide to the assessment of the problem and selection of the abatement or control methods and processes is presented in Section IV. In this section, the intention is to lead the reader, step by step, through the procedures to be followed in defining the program, identifying the problem, assessing available data, developing a data-gathering program, selecting and developing a final plan, and implementing the program.

Background information on the stormwater problem, including details on the emergence of the problem, the characteristics of stormwater, the sources and movement of pollutants, and the environmental effects, is presented and discussed in Section V.

Evaluation procedures and criteria are presented in Section VI. The collection of data, with particular emphasis on quality sampling and flow measurement, and the analysis of data are discussed. Processes and equipment evaluation, system control, and costs are also described.

Management Alternatives and Technology, Part III, is subdivided into seven sections according to each generalized alternative category. Unit processes and operations are described and each discussion covers their (1) useful application, (2) value in meeting specific pollutant removal requirements, (3) performance data, (4) advantages and limitations, and (5) available cost data.

Part IV, Implementation, has two subsections. The first, Section XIV, describes the combining of the unit processes and operations into complete programs, the applications of mathematical models, master plan examples, and environmental aspects. General operation and maintenance considerations

and experience drawn from all projects are summarized in Section XV.

Cited references by Section and general references are presented in Section XVI. Numbers enclosed in brackets within the text correspond to cited reference listings. A glossary, abbreviations, and conversion factors are presented in Section XVII.

BACKGROUND

Recognition of the significance of stormwater-induced water pollution has been slow. Current interest, limited though it may be, is largely attributable to the efforts of the EPA Storm and Combined Sewer Pollution Control Research, Development, and Demonstration Program.

A 1964 U.S. Public Health Service in-depth study [7] was the first federal appraisal of the problem. So little was known about stormwater problems before that time that, in 1963 testimony before a Senate subcommittee investigating water pollution, Secretary of Health, Education, and Welfare Celebrezze stated in part:

> No real knowledge exists today as to what a national separation program might cost, although estimates have been made in billions of dollars. Even the extent of pollution caused by unseparated sewers is not known, although preliminary studies suggest it is very great....Before instituting a federal program for assistance in the separation of combined sewers, the ultimate cost and duration of which are speculative, we need to obtain realistic estimates of the costs of a separation program....Once reasonably accurate information as to total cost of a national separation program is obtained and alternative methods have been fully explored, we will be able to make informed decisions among the alternatives and present recommendations to Congress based thereon. Consequently, I am unable to support this provision [funds for sewer separation] of the bill at this time, because I do not think we have adequate information. [7]

The first federal legislative recognition of the significance of stormwater problems is found in the Water Quality Act of 1965, Section 6.(a) in which it is stated that:

> The Secretary is authorized to make grants to any State, municipality, or intermunicipal or interstate agency for the purpose of –
>
> (1) assisting in the development of any project which will demonstrate a new or improved method of controlling the discharge into any waters of untreated or inadequately treated sewage or other wastes from sewers which carry *storm water* or *both storm water and sewage* or other wastes,...(Emphasis added)

Gradually, sanitary districts and local and state governments have become more aware of stormwater problems. In some cases awareness has been created by the surcharging of overloaded sanitary and combined sewers, causing localized wastewater flooding of streets and basements--events usually brought to the attention of City personnel.

The District of Columbia has been aware of the problems of combined sewers for many years. After 1890, separate sewers were installed in new areas of the city. In studies conducted by consultants in 1933 and 1935,it was recommended that certain areas within the older combined sewer portions of the District be separated. In a 1957 Board of Engineers study,it was recommended that a project be undertaken to (1) separate 10 percent of the combined sewer area and (2) construct new interceptors to convey more combined wastewater to the water pollution control plant. This recommendation was only partially implemented because of budgetary reasons. Although the Board recognized that combined sewer overflows were a significant source of water pollution, it had little information on the pollution resulting from storm sewer effluents alone. A 1970 EPA-sponsored study of the District's stormwater problem recommended:

> Discontinue the current sewer separation program and develop pollution abatement programs for both the combined and separated sewer areas if the pollutional characteristics of storm water determined in the current study are confirmed in other areas of the District. [2]

1967 National Inventory

In 1967, the APWA conducted a national survey [9] to obtain data on (1) the number of people served by different types of sewer systems, (2) the extent of storm and combined sewer overflows, (3) water use in waters receiving overflows, (4) flooding related to combined sewers, (5) infiltration, (6) combined sewer regulators, (7) treatment plant bypassing, and (8) costs of sewer separation and other abatement alternatives. The survey included all urban communities with populations greater than 25,000 and representative samples of smaller ones from each state. Among the extensive findings of this survey were the following (costs shown in brackets have been adjusted to ENR 2000):

> If all jurisdictions with combined sewers were to replace them by providing a separate conduit for sanitary and industrial wastes, and another for storm water, they would face an expenditure of approximately [$56 billion]. Inclusion of the expenses incurred in making the necessary plumbing changes in and on private property to effect total separation would increase this cost to approximately [$90 billion]. However, the report strongly implies that such a calculation must be considered theoretical. Responses from many municipalities, especially those with high population densities, disclose that the possibility of changing all combined sewers to separate is remote.
>
> Alternate methods of control and/or treatment other than sewer separation are in use in some jurisdictions and research is being conducted to further evaluate the effectiveness and applicability of various methods. There were insufficient data to make a detailed cost estimate of the alternate methods. However, from the limited data available, it appears that the cost of such methods would be about one-half the cost of complete separation. In addition, the expense of separating plumbing in and on private property would not be necessary. If alternate means of control and/or treatment were used exclusively, which is unlikely, the total cost would thus approximate [$28 billion].
>
> . . . . . .

Of the 641 surveyed jurisdictions [1,329 jurisdictions estimated nationwide total], 493 reported 9,860 combined sewer overflows. In addition, 237 of the 641 jurisdictions reported 759 overflows from combined sewer pumping stations and 160 communities reported 755 separate sanitary sewage pumping station overflows. Reported treatment plant overflows or bypasses amounted to 532. In addition, 87 jurisdictions listed 2,306 "other" overflow sources. In large measure, these are unregulated discharges. The grand total of 14,212 overflows in the surveyed jurisdictions indicates the multiplicity of discharges into watercourses, lakes and coastal waters.

. . . . . .

Infiltration was reported as a problem under dry weather conditions by 14 percent of the jurisdictions surveyed; under wet weather conditions, 53 percent reported infiltration as a problem.

. . . . . .

Bypassing of untreated or partially treated sewage occurs at water pollution control plants at frequent intervals, for various reasons, including the overtaxing of plant capacities during storm flow periods.

Engineering studies on overflow problems have been made in 310 of the jurisdictions surveyed. Of these, 220 jurisdictions have made estimates of the cost for a project or projects to eliminate all or part of their combined sewer overflow problems. In addition, 222 jurisdictions surveyed reported current plans for sewer separation projects and 52 jurisdictions have plans for constructing alternate control or treatment facilities. [9]

EPA Research, Development, and Demonstration Program

In 1965, Congress authorized a Research, Development, and Demonstration Program to find lower cost remedial alternatives to complete combined sewer separation. Today this EPA program is under the jurisdiction of the Storm and Combined Sewer Technology Branch of the National Environmental Research Center--Cincinnati. Major emphasis to date

has been directed toward combined sewer overflows, although it has been found that storm sewer discharges also carry high pollutant loads (contrary to longstanding beliefs).

Thus far, over 140 projects have been carried out by means of demonstration grants and contracts. These projects have produced much information useful in defining the problem and in the application of remedial techniques related primarily to combined sewer overflows. As a result, new hardware has been developed and is now available to those engaged in planning and construction of remedial works. For the most part, the funded projects have not been integrated into an overall abatement program but have covered many individual facets of the problem.

Valuable information on the characteristics of storm discharges and combined sewer overflows, along with various treatment and control processes and systems, has been derived from these projects. On an individual basis, there have been both successes and failures in the program, but on the whole, many effective tools for combating the problem have been developed.

Other Programs

In addition to the EPA Research, Development, and Demonstration Program, notable other national programs in the stormwater field include those of the American Society of Civil Engineers (ASCE), the National Science Foundation (NSF), and the Office of Water Resources Research (OWRR).

ASCE – The American Society of Civil Engineers' Urban Water Resources Research Program was initiated and developed by the ASCE Urban Water Resources Research Council. The basic purpose of the Program is to help establish coordinated long-range research in urban water resources on a national scale. The Program has developed over 3 phases: (1) 1967-1969, research needs assessment; (2) 1969-1971, studies on urban water problems under the theme of urban water management; and (3) 1971-1973, translation of research findings into practice. To date, 18 Technical Memoranda (see Section XVI for listing) have been published and distributed.

NSF – Within the National Science Foundation, the Division of Environmental Systems and Resources is one of four organizational units administering the program of Research Applied to National Needs. The purpose of the programs of this Division is to support research to develop improved understanding of environmental issues and the impact of human activity on the environment, and to improve the prospect of

reconciling economic development with improved environmental quality in the United States. The major program areas are (1) regional environmental systems, (2) environmental aspects of trace contaminants, and (3) weather modification.

OWRR – The Office of Water Resources Research, U.S. Department of the Interior, in addition to direct research support, compiles annually a summary of descriptions of current research on water resources. The catalog series, initiated in February 1965, makes readily available to all who are engaged in water-related research, or otherwise concerned with water resources problems, information on what is being done, by whom, and where.

EMERGING EMPHASIS ON THE STORMWATER PROBLEM

As a result of these recent and ongoing programs, the magnitude of the stormwater problem is becoming more widely known. Studies are underway to characterize more thoroughly the quantity and quality of storm runoff, storm sewer discharges, and combined sewer overflows. This state-of-the-art text brings to the engineering world the first comprehensive analysis of the problem and what can be done about it. Two similar studies are proceeding concurrently, one in Canada and one in France. It has become readily apparent during this study that no single "ideal" solution to the problem exists.

It was originally believed that the best answer to abatement of the combined sewer overflow problem was the elimination of combined sewers by constructing separate storm and sanitary sewers. More recently, in light of the costs and disruption involved in separating combined sewers, emphasis is being placed on alternatives to sewer separation. Specific attention is being paid to (1) source controls, (2) storage and/or treatment of combined sewer overflows, (3) reduction of infiltration and inflows to sanitary sewers, (4) more complete utilization of existing combined sewer and treatment systems, and (5) mathematical modeling techniques for predictive and decision-making purposes in augmenting design, selection, and operation of abatement systems.

The EPA has sponsored numerous studies over the last few years concerning the treatment of combined sewer overflows, both with and without storage. Retention of combined sewer flows makes it possible to provide treatment at existing sanitary treatment facilities or at facilities specifically designed for storm flows. If the level of treatment required for storm flows is less than that provided at the water pollution control plant or to offset high transmission

costs, adding the treatment at the storage locations may be advantageous. Thus, several small satellite plants can be used, possibly in conjunction with phased construction, rather than one large plant.

A manual of practice on the prevention and correction of excessive infiltration and inflow into sewer systems was recently completed [8]. The objectives are (1) elimination of untreated wastewater bypasses and overflows, (2) lower total costs of treatment works, and (3) elimination of the construction of unnecessary treatment works capacity.

1972 FWPCA Amendments

The Federal Water Pollution Control Act Amendments, passed in October 1972, place new and stronger emphasis on stormwater pollution. In the Act, Congress defined "treatment works" to add, for the first time,

> ...any other method or system for preventing, abating, reducing, storing, treating, separating, or disposing of municipal waste, including *storm water runoff*, or industrial waste, including waste in *combined storm water* and sanitary sewer systems. (Emphasis added)

Hence, projects for abatement of stormwater pollution (subject to guidelines set forth by the Administrator of the EPA) will be eligible for general construction grants even if new technology is not involved. This is consistent with the purpose for the construction grant program to

> ...provide control or treatment of all point and nonpoint sources of [water] pollution.

Further, it is consistent with the President's Environmental Message of 1970 in which he stated:

> A river cannot be polluted on its left bank and clear on its right. In a given waterway, abating some of the pollution is often little better than doing nothing at all, and money spent on such partial efforts is largely wasted.

The Act also requires that grants for the construction of treatment works will not be approved unless the tributary sewer system is not subject to excessive infiltration.

Comptroller General's Report

Because of the seriousness of the combined sewer overflow problem, the Comptroller General of the United States, on March 28, 1973, submitted a report to Congress on the "Need to Control Discharges From Sewers Carrying Both Sewage and Storm Runoff." Findings revealed that combined sewer overflows "...are a major pollution problem and prevent many areas from attaining Federal and State water quality goals." The report recommended that the EPA require states to identify, study, and submit abatement plans for combined sewer overflow pollution and to consider the award of construction grants for these abatement facilities. [3]

State and Local Requirements

On the state and local level, regulations concerning water pollution abatement have been tightened. Illinois [5, 10, 14] and Georgia [4] have promulgated their requirements for overflow control and treatment.

In an effort to curb channel erosion and downstream siltation, the State of Maryland [13, 11, 1] requires the land developer to attenuate runoff so as not to allow flow releases (for up to two year storms) to occur any faster than before site construction.

The City and County of San Francisco, California, has passed a 1970 resolution [12] for a special time schedule to regulate discharges from combined sewers. A recent regulation in Orange County, Florida [6], states that a complete stormwater management system be provided to handle all stormwater runoff in "prime recharge areas." It also states that treatment is required for stormwater in all drainage systems. This regulation is the first to deal so specifically with the control and treatment of urban runoff as opposed to combined storm and sanitary flows.

INFORMATION SOURCES AND DEFINITION OF TERMS

Information Sources

Information for this text was gathered from (1) the literature, (2) project documents, (3) demonstration project site visits and interviews, and (4) previous experience. To obtain information regarding the many ongoing and concurrent studies of the EPA Research, Development, and Demonstration Program, monthly progress reports for the various projects were reviewed. In addition, reports from the EPA's Environmental Protection Technology Series were studied for information concerning recently completed projects. Information

was also obtained from an extensive survey of other literature in the field. More than 600 references, including books, magazine and journal articles, engineering reports, progress reports of ongoing projects, and EPA reports were collected and reviewed.

Visits were made to numerous EPA demonstration project sites, both completed and ongoing, to view the facilities and to obtain information on the size and scope of the various projects, their function, and problems encountered. In conjunction with these visits, discussions were held with plant operators, design engineers, city officials, and EPA officials concerning the design, operation, and effectiveness of the various projects. Construction costs, operating and maintenance costs, and operational data were obtained for the various plants where available.

Construction drawings of many of the plants were reviewed. Particular attention was paid to unique construction features, special application of mechanical equipment, unusual design or construction problems, plant layout, physical size, and mode of operation (automatic or manual).

Nomenclature and Terminology

Efforts to attain better levels of treatment or abatement for storm discharges and combined sewer overflows must be based on a uniform understanding of the "language" of the field. During the investigations performed for this study, it became apparent that no standardized nomenclature exists among the jurisdictional authorities, state and local agencies, and others who operate in the storm discharge and combined sewer overflow field. To assist in unifying terms, terminology, and nomenclature, a Glossary of Terms is included in Section XVII of this report.

The units used to define design criteria, operating efficiencies, pollutants, etc., were found to vary widely even for similar facilities at different locations. An attempt has been made in this text to standardize the units and to suggest evaluation parameters for the various methods and processes described.

In light of the proposed national policy to simplify units of measurement by converting from the English system to the metric system, the units used in this text are the metric units. Since metric units are not commonly used for most measurements nor are they readily recognized by most people in the United States, the metric units are followed by the English equivalent in parentheses throughout the text.

Units presented in tables and figures are English, and the metric conversion factors are listed below each table and figure. A list of conversion factors is also presented in Section XVII for the reader's convenience.

Part II

FORMULATING AN APPROACH

Section IV

GUIDE TO PROGRAM ASSESSMENT AND SELECTION

What constitutes an effective program for urban storm flow management? How do the pieces fit together? Where does one start? These questions are addressed briefly in this section in the context of outlining a program for the urban administrator and/or engineer. The purpose of presenting a guide at this early point in the text is to provide a framework upon which to relate material presented in the subsequent sections.

The success of a program depends largely upon an early consensus on objectives and allocation of available resources. The work is motivated by problem acknowledgement and identified magnitude. Program development logically follows using coarse (roughing out) and fine analyses, supplemented by identification of data needs and data collection, until alternative plans are evolved. Final stages include public participation, selection of a final plan, program implementation, and continuing studies.

PRELIMINARY PROGRAM DEFINITION

Stated simply, the administrator/engineer must define the scope and objectives to be achieved before methods of storm and combined sewage treatment and control can be selected. The task is not easy. For example, the objective of "attaining a significant reduction of pollutants discharged to the receiving waters" is rather meaningless unless it is expanded by addressing such questions as:

Significant with respect to what?

Which pollutants?

Where in the receiving water?

Under what circumstances?

Within what funding constraints?

Within what timing constraints?

Is the program to be limited to the reduction of pollution from urban runoff or are other alternatives to be considered (e.g., upgrading existing treatment facilities, removal of sludge banks or other benthic deposits, control of agricultural drainage, control of water use and land use practices, etc.)?

To what extent is the program contingent on actions by other jurisdictions?

Thus, as an initial step, the administrator/engineer should identify what degree of improvement at what point in time will constitute successful achievement of program objectives and, conversely, what outcome will indicate failure.

Scope

The scope of a project as defined in this text includes a definition of the magnitude or limits of the investigation, the required timing, and the level of funding available to support the work. The study area and interdependencies, if any, with adjoining areas and/or systems should be clearly defined in the initial scope. The purpose is to determine to what extent the problem may be isolated, hence simplifying the limits to be defined. Flows crossing the study area boundaries should be identified (i.e., overflows to receiving water, intercepted flows to treatment and from upstream areas, overland flows at times of flooding, cross-connections, etc.).

Next, the program timing should be selected. Are the improvements to be of an interim nature or are there to be clear ties to a broader long-range program? Is there an immediate (urgent?) problem which must be allowed for? Are there deadlines to be met?

Finally, the potential project funding, both sources and general amounts, must be realistically appraised. This factor may greatly reduce the number of alternatives to be studied.

Objectives

Objectives may be identified by legislative or regulatory agency requirements, or they may be the result of strong local concern to clean up the beaches, increase safe swimming days, reduce flooding, improve aesthetic enjoyment of

recreational waters, protect water supplies, or application for a justified waiver, etc. Where specific problems exist and are identified, direct approaches are facilitated with resultant economy of effort. On the other hand, the objective may be one of prevention to avoid a potential future problem. In the latter case, the study may be of a reconnaissance nature to match instream quality with specific point and nonpoint discharges. In water-short areas, the objective may be to maximize the reclamation potential of stormwater discharges and, as a result, a survey may be needed not only of the sources but also the potential users. The advantages of modest improvements in some areas should be weighed against a planning overkill with the possible danger of indefinitely postponing construction. Approaches which integrate wet-weather solutions with dry-weather system and treatment needs should be given priority consideration.

Finally, the objectives should be listed in concise statements, comments should be solicited, and a practice of continual reassessment should be adopted. Surprisingly, but effectively, the fundamental objectives of one of the largest stormwater studies ever undertaken (Chicagoland Area) numbered only two:

1. Prevention of backflow to Lake Michigan for all storms of record.

2. Meet the applicable waterway standards established by the State Pollution Control Board and the Metropolitan Sanitary District of Greater Chicago. [2]

PROBLEM IDENTIFICATION

Each storm flow management problem encountered may be expected to have the following base elements: (1) a geographic area, (2) a sewerage network, (3) a characteristic hydrology, (4) a receiving body of water, and (5) agencies with jurisdictional control. All of these elements must be considered in identifying the problem and setting baseline criteria. Baseline criteria (along with the scope and objectives) are essentially a part of the "ground rules," and all alternatives must start with these items in common, hence as a base.

Tributary Area

Of particular consequence in identifying a tributary area are its boundaries, size, land use characteristics and population (present and projected), political subdivisions,

and topography. Maps, aerial photographs, census tract data, planning reports, soil studies, and on-site inspection are among the most used sources of information. Street litter, construction activities, flooding complaints, land use, property ownership, maintenance practices, pesticide and/or fertilizer use, and the like can be assessed through direct observation and through the appropriate city departments and retail outlets.

These data are used primarily to estimate the expected surface runoff quantity and quality, and to locate problem areas and possible sites for abatement facilities. The site conditions (e.g., the availability of land) may greatly influence the selection of alternatives.

Sewerage Network

The type of system (combined, separate, or hybrid) and its general condition (age, structural soundness, infiltration, adequacy of slopes, etc.) must be known. Next, the basic location, alignment, and capacities of the major trunks, pumping stations, and all points of control, discharge, and interconnections with other areas must be identified. Of particular concern will be the availability of interceptor and treatment capacities, measured flow and quality data, records of surcharging or flooding, and basis of design. Paths of overland flow and locations of depressed area surface storage may be of interest.

The primary purpose in this aspect of the work is to know how the system will respond under different storm occurrences and how in-system modifications may alter these responses.

Characteristic Hydrology

Rainfall and stream flow are the driving forces behind essentially all storm flow investigations. Because storm patterns, intensity, and frequency vary markedly with geographic location (see Figures 2 and 3), alternative methods of approach must be considered. For example, storms of high intensity and short duration may be best countered with storage, whereas storms of low intensity and long duration may be more effectively controlled through increased treatment capacity or runoff deterrents such as porous pavements. Intervals between storms are significant in that they may dictate dewatering requirements and, in turn, treatment rates in system cleanup from one storm in preparation for the next.

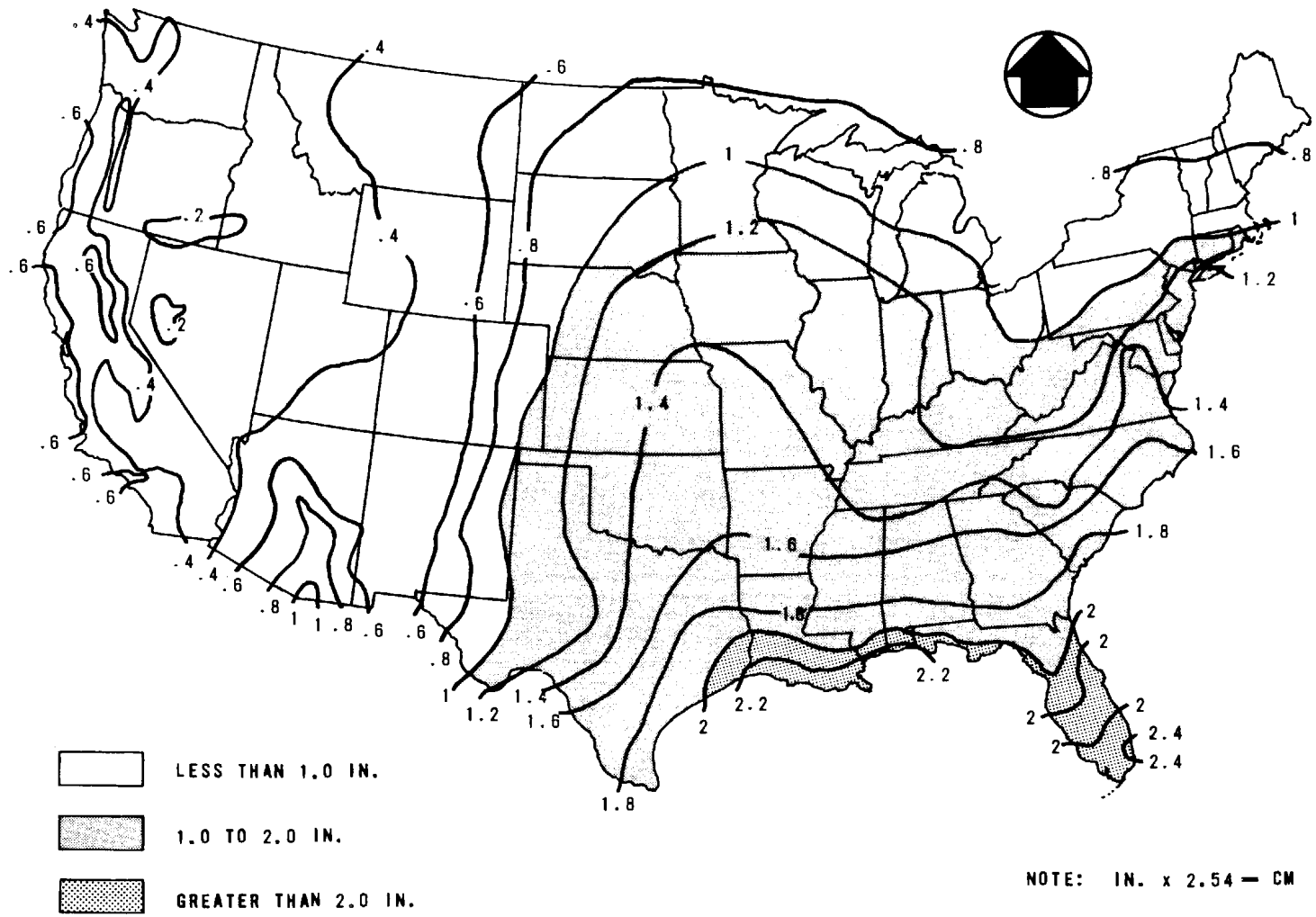

Figure 2. National rainfall frequency - duration experience: 1-year 1-hour rainfall (inches) [7]

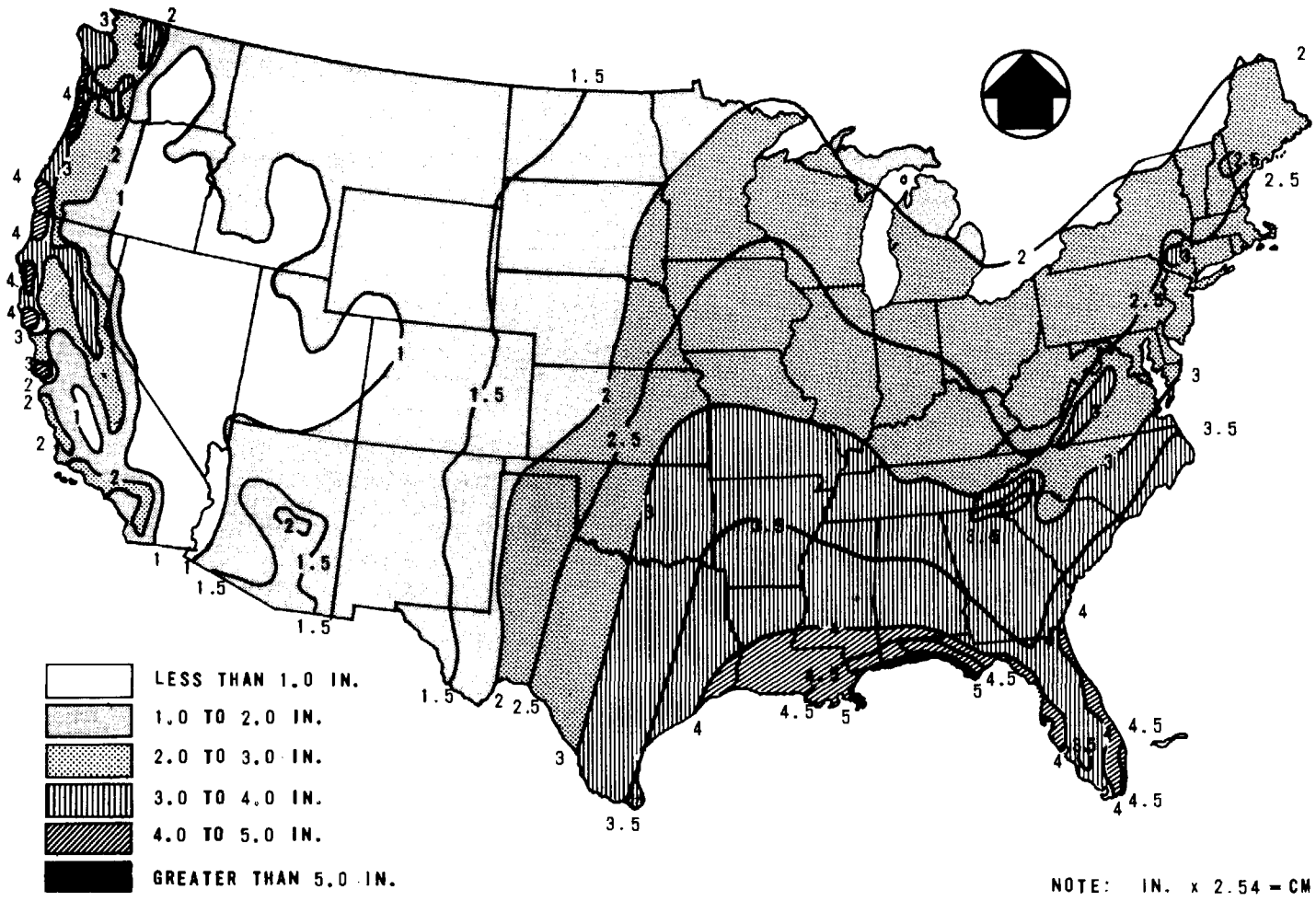

Figure 3. National rainfall frequency – duration experience: 1-year 24-hour rainfall (inches) [7]

The average annual rainfall recorded in 87 major cities in the United States is 84 cm (33 inches). The range of averages for these cities is from 5 to 178 cm/yr (2 to 70 in./yr). When dealing with storm flow problems, other important characteristics are the intensity and type of precipitation, and the magnitude, frequency, and duration of storm events. Because rainfall events tend to repeat themselves over long periods of time, considerable benefit can be drawn from extensive historical records. Because the repetition is random and not sequential, it is best to make comparisons by arraying the data according to some parameter of interest, such as magnitude or maximum intensity. While the characteristics of tomorrow's storm cannot be predicted, the probability of occurrence of a certain number of storms of like characteristics in a certain period of time can be forecast reasonably.

Because many storms exhibit pronounced frontal patterns and/or intensity cell behavior, the spatial and temporal variance of rainfall within a single storm may be substantial.

Frontal Patterns – In recent studies conducted in San Francisco [1], it was found that 30 rain gages--average of 1 per 324 ha (800 acres)--were required for good representation of storm patterns in this particularly hilly and exposed city. A time series selected from these rainfall data (Figure 4) illustrates a typical storm pattern associated with a weather front. The authors [3] found significant spatial and temporal differences in rainfall, not only as shown on the figure, but also when the same storm was depicted using alternatively 5-minute, 10-minute, and 15-minute cumulative rainfall amounts. The primary significance of such patterns is that while some areas are under maximum storm stress, other areas nearby are relatively unaffected. Thus, centralized facilities, coupled with total system management and control, may be able to provide better pollution abatement with smaller facilities by servicing the stressed areas preferentially.

Intensity Cells – Another frequently encountered storm phenomenon is the "heat island" shower condition shown on Figure 5 for Washington, D. C. In the observer's words:

> These four days offer stronger evidence than anything observed so far this year, that the heat and perhaps pollution generated by a city can assist nature in creating rain. During this period the NCA was under a high pollution alert. On each of these days Washington National Airport (WNA) reported prevailing southwest surface

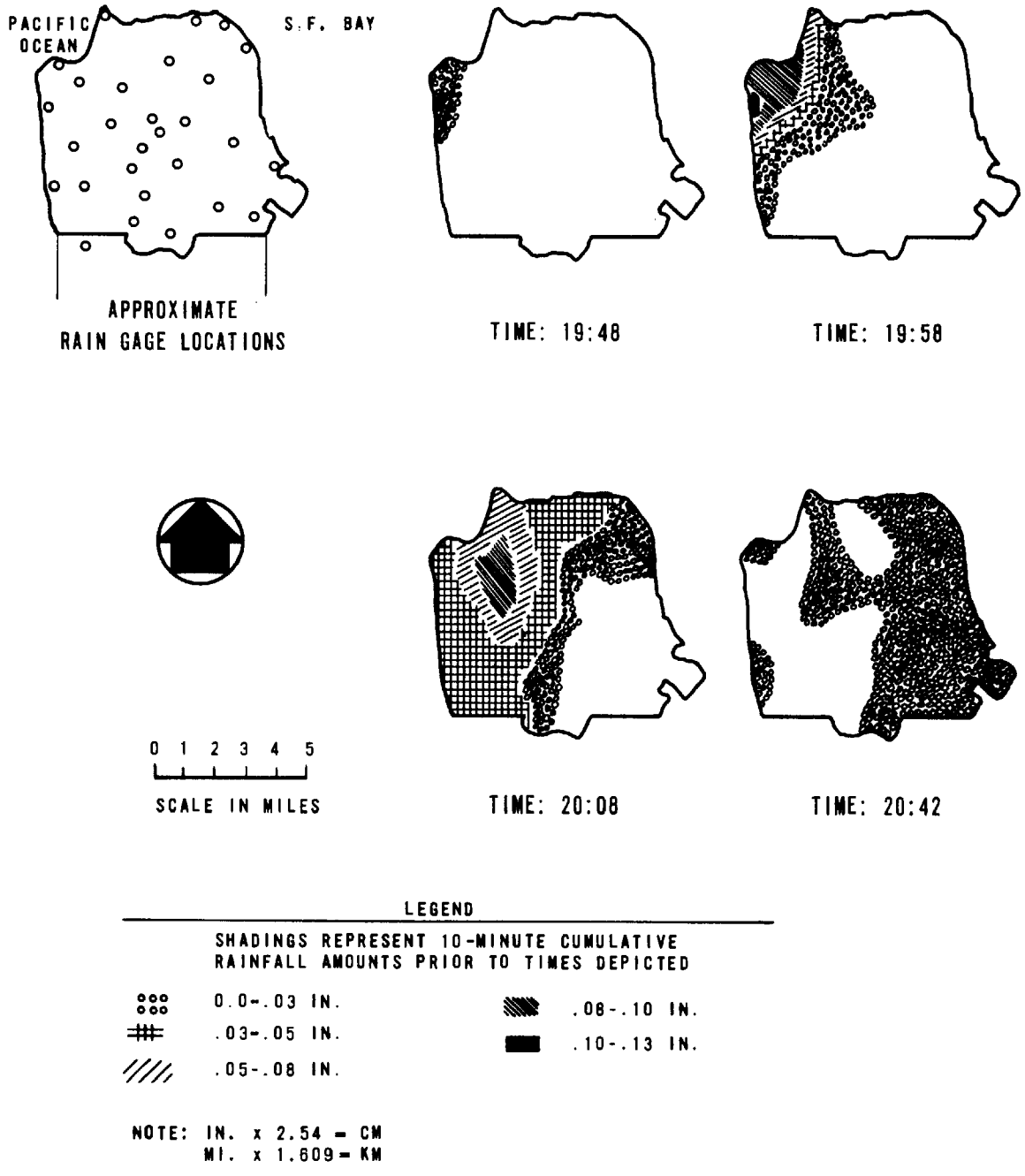

Figure 4. December 22, 1971
frontal storm pattern, San Francisco [3]

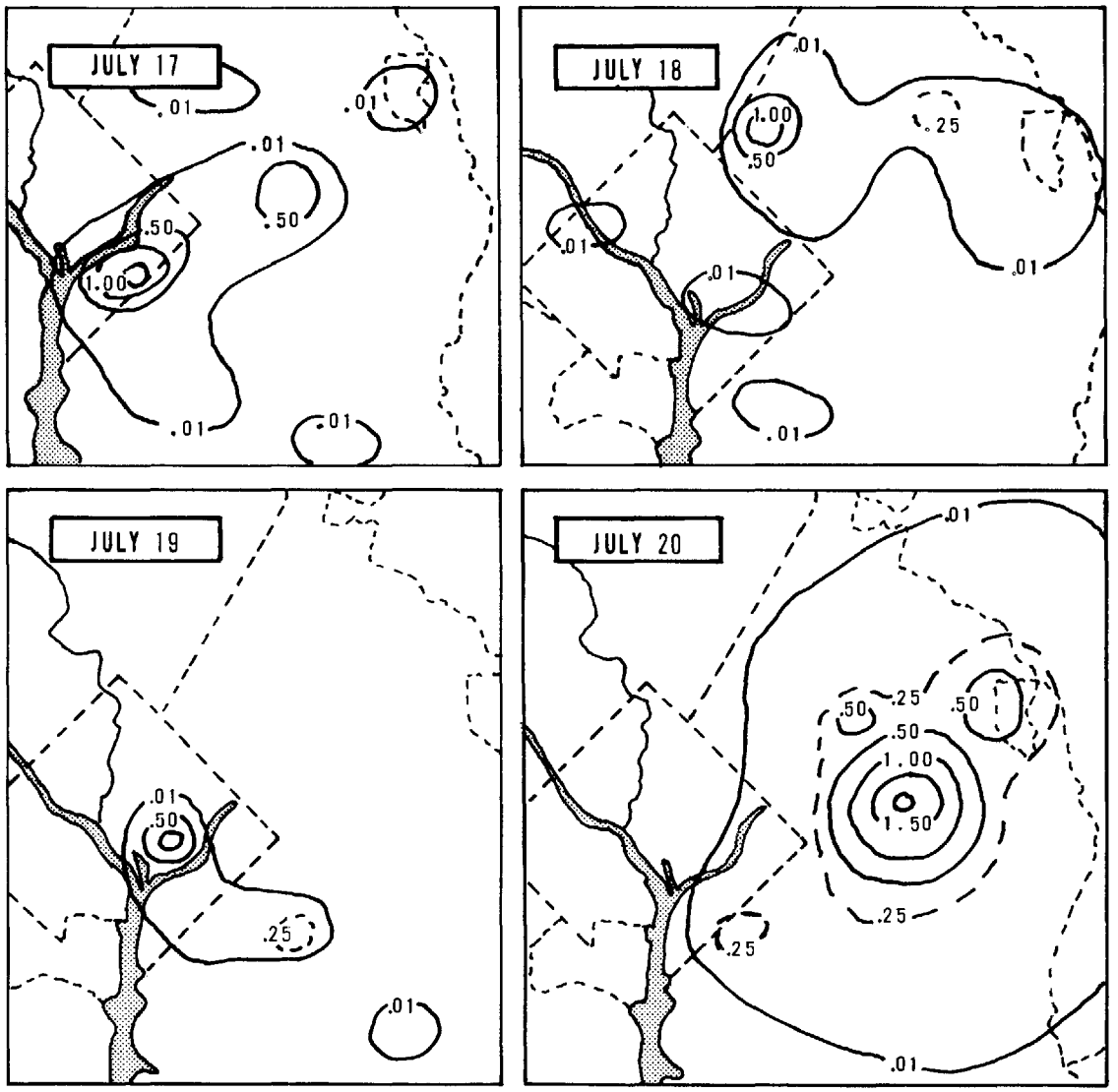

NOTE: MI X 1.609 = KM
IN. X 2.54 = CM

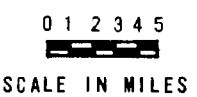

Figure 5. Rainfall isohyets (inches) for heat island showers, July 17-20, 1972, Washington, D. C. [6]

> winds averaging 5 mph or less, and winds up to 10,000 feet were less than 10 mph. This unusually slow air movement allowed the same air parcel to remain over the hot city long enough to absorb plenty of heat. By late afternoon each day (early afternoon in some areas), as those heated parcels began rising, they cooled and condensed their moisture. As a result, showers and thunderstorms formed over the eastern suburbs and interior city. Meanwhile, the northern, western and most of the southern parts of the NCA remained dry. Note that the rainfall patterns (isohyetals) are circular, indicating little movement of the clouds. On other days the isohyetals were elliptical, showing more rapid storm motion, and the air did not remain over the city long enough to cause rain. [6]

In storm flow management systems, these intense but extremely localized showers could best be controlled if access to centralized storage/treatment facilities were provided. Conversely, remote satellite facilities would be easily overtaxed by such downpours or, by accident of their location, not even come into use.

Illustrative Comparisons — Each major urban area, and to some extent, subdivisions thereof, must be considered separately in plan development because each will have its own characteristic hydrologic phenomena. This is illustrated by a comparison of three distinctly different regimes--Chicago, San Francisco, and the United Kingdom. Both Chicago and San Francisco are large cities with old combined sewer systems. The fact that the annual precipitation in Chicago averages 84.3 cm (33.2 inches), as compared to 47.5 cm (18.7 inches) for San Francisco, is not as significant as the difference in the nature of the storms which occur. Most of the precipitation (90+ percent) in San Francisco occurs during the months of October through April. So, for 5 months of the year, there is almost no rain and, consequently, no storm flow problem. During a typical rainy season month, however, San Francisco receives as much precipitation as Chicago, where the precipitation is distributed more evenly through the year. Also, in Chicago, sudden, intense storms and summer thundershowers are common, whereas such events are rare in San Francisco. This is observed in the data by comparing the 1-hour rainfall with a 1-year return period in Chicago of 3.0 cm (1.2 inches), with that of San Francisco of 1.5 cm (0.6 inches). In other words, Chicago can expect to receive 3.0 cm (1.2 inches) of rain or more falling in 1 hour, on the average, once a year. By comparison, on the average

once a year, San Francisco would receive a like amount of rain during a 3-hour period, and London receives the same amount during a 24-hour period.

Everything else being equal, a system for treating combined sewer overflows in Chicago would have to be sized to accommodate storms of greater intensity. For example, a 10-ha (25-acre) drainage area with a runoff coefficient of 0.5 would require a 0.42 cu m/sec (9.5 mgd) treatment facility designed for a 1-year, 1-hour storm in Chicago, but only a 0.21 cu m/sec (4.7 mgd) facility for San Francisco. Note that the size of a storm flow treatment system is primarily intensity (rate) sensitive, whereas the capacity of a storage system is intensity-duration (volume) sensitive.

In the United Kingdom, where most storms are of very low intensity, many cities have provided primary treatment for excess flow from combined sewer areas for many years. The standard excess flow capacity is approximately 6 times dry weather flow with greater flows discharged without treatment [5]. Since few storms in the United Kingdom have very long duration, other cities have provided storm standby tanks to capture excess flow for treatment after the storm. The notable success of these installations, some in operation for over 50 years, is largely attributable to the uniformity of the storm events.

Storm Event Definition – The best storm event definition for a particular study should consider the timing and separation of rainfall, the source data available, the scope and objectives of the investigation, and the limitations of the physical system.

Because storm events are to a large extent independent of clock time, simple daily and, to some extent, hourly precipitation tabulations and analyses may be misleading. For example, a 10-hour storm starting at 8 p.m. would appear as two storms on an arbitrary daily tabulation, and maximum hourly precipitation based on clock hours could be significantly less than the maximum 60-minute rainfall chosen irrespective of starting time.

Further, to facilitate practical engineering analysis, reasonable separation between "storm events" is considered most desirable. Thus, on-again/off-again showers would be classified as a single event rather than as multiple storms. This improves the credibility of statistical analyses which presume relative independence of events.

In a recent study for the District of Columbia, storm events were characterized as:

> ...starting with the first measurable rainfall after a minimum of 6 consecutive hours of no measured rainfall. A storm event ends at the next 6 consecutive hours of no measured rain. [4]

The study encompassed the entire District area and, on this basis, a minimum 6-hour separation was considered appropriate for initiating significant corrective action, such as partial dewatering of storage basins for treatment. Although the selection of the separation interval is somewhat arbitrary, it is necessary before breaking down the continuous rainfall record into "discrete" events where the events lose the identity of sequential occurrence.

The recorded observations of the U.S. Weather Bureau are the principal data source, but these may be supplemented by city and private gages forming a blanketing network. Pertinent data suited for computer (statistical) analyses and ranking include for each event:

> The storm date, starting hour, duration, total rainfall, maximum hourly rainfall, and the hour after the start of the storm in which it occurred, the days elapsed since the last storm, and occurrences of excessive precipitation...

From the arrayed data, engineering judgments can be made as to the significant events and event series for planning purposes.

Receiving Waters

Just as the input hydrology and tributary area characteristics provide the source data for testing storm flow alternatives, the receiving body of water represents the ultimate receptor of the generated wastes. Thus, receiving water conditions are of paramount importance in identifying the problem. The problem may be in the form of a direct hazard, such as infectious bacteria, toxicity, or flammables; a biological degradation; an aesthetic or public nuisance; or any combination thereof.

The nature of the receiving waters--lakes, estuaries, swift-flowing streams, etc.--will largely determine the degree to which wastes are assimilated (consumed), accumulated, or transferred. Other considerations include the relative

magnitudes, loadings, and locations of all discharges; background loads in the receiving water; uses and withdrawals. Generally, the most difficult task is relating conditions in the receiving waters to specific discharges, because only the aggregated effect is seen.

Stream flow records should be analyzed with respect to monthly minimum and average flow values, background impacts (such as flow augmentation and water use commitments), and historical quality data (such as zones of maximum stress, recovery data, natural background levels, trends, and relationships to specific storm events). For example, the data may indicate a noticeable increase in pollutants after storms or, on the contrary, localized evidence of a beneficial (flushing) effect. Other suggested alternatives are the employment of mathematical (simulation) models, intensive representative sampling and analyses of both the discharges and receiving waters, the location and identification of bottom deposits, and the use of conservative tracers (to identify flow paths and dilutions).

Characterization of each waste stream (point discharge) should include its flow rate, duration and total volume, and the concentrations and total mass of pollutants. A determination of floatables may be facilitated by the temporary construction of a floating log boom around the discharge point (see Section V, Figure 9). Selective grouping of discharges, maintaining a materials and flow balance, may greatly simplify mathematical approaches and help relieve data congestion. Nonpoint runoff, where significant, may be handled by simulation models or approximated from tabulated values.

The cumulative study effort is directed toward predicting receiving water responses to any feasible waste load configuration and the relative impact effect of different systems (i.e., stormwater overflows versus normal dry-weather treatment plant and industrial effluents versus irrigation water returns, etc.). In special cases, it may be necessary to measure or estimate flow quantities and characteristics at selected upstream points (i.e., diversions) in the collection system as well as at the point of discharge. The latter will permit consideration of upstream impoundments, alternative routings, and evaluation of in-system controls.

Agencies

Agencies having jurisdictional control must be identified so that they may be adequately represented in the planning process. In essence, the conceptual approach must be

areawide in scope to preclude actions of one agency nullifying or hindering those of another. Again, the receiving water response to the aggregated effect of the loadings, both natural and induced, and the impact of isolated discharges are nearly impossible to detect. Other important reasons for agency identification are to distribute implementation responsibilities equitably and to encourage the free flow of information and sharing of effort.

DATA ASSESSMENT AND PROGRAM DEVELOPMENT

With the problem(s) identified and the available resources assessed, the selection of candidate alternatives is rather straightforward. One of the first actions could be to list the major strengths and weaknesses of the existing system. Is it undersized? Oversized? Are there particular bottlenecks? High incidence of flooding? Is excess treatment capacity available at existing plants? Can the existing trunk combined sewers and interceptors handle increased flow rates or temporary in-line storage? What feasible sites are available for construction of storage-treatment facilities? Which projects now underway will be affected? Which commitments must be met? Who is best qualified to conduct the study? How may the effort be shared and resources put to most effective use? All of these questions are typical of those to be considered in the preplanning stage.

"First Cut" Analysis

The purpose of a "first cut" analysis is to reduce effectively the number of alternatives requiring detailed analysis and to point out areas with high return prospects. In this text, Part III, Management Alternatives and Technology, has been organized by category to facilitate this analysis: source control, collection system control, storage, and treatment. Each alternative is presented as a unit process. Integrated (complex) systems, the combining of two or more unit processes, are discussed in Section XIV. The results are summarized in Table 6. Comparisons are based upon the type of treatment performed, the degree of contaminant removal, and the relative capital cost. A new manual [8] is being prepared to normalize input data as an aid to this level of analysis.

Source controls are designed to correct the problem before it becomes a problem (i.e., controlled ponding to reduce flow peaks within the system, runoff attenuation through the use of porous pavements, improved maintenance of construction sites to minimize scour and washouts, better housekeeping to clean up leaves, street litter, and refuse before

Table 6. MANAGEMENT ALTERNATIVES SUMMARY[a]

Categories	Aesthetic benefits	Flow reduction/attenuation	BOD_5 reduction: 0-25%	BOD_5 reduction: 25-50%	BOD_5 reduction: Over 50%	Suspended solids reduction: 0-25%	Suspended solids reduction: 25-50%	Suspended solids reduction: Over 50%	Total coliform reduction: 0-25%	Total coliform reduction: 25-90%	Total coliform reduction: Over 90%	Nutrient reduction: 0-25%	Nutrient reduction: 25-50%	Nutrient reduction: Over 50%	Capital cost range,[b] $/acre: 0-10,000	Capital cost range,[b] $/acre: 10,000-50,000	Capital cost range,[b] $/acre: Over 50,000	Capital cost range,[b] $/mgd design capacity: 0-25,000	Capital cost range,[b] $/mgd design capacity: 25,000-50,000	Capital cost range,[b] $/mgd design capacity: Over 50,000	Typical components or remarks
SOURCE CONTROLS																					
Retention/detention		●		●			●			●			●			●					Land use planning, upstream impoundment, porous pavement
Enforced controls	●			●				●		●			●								Air pollution, erosion, chemical use.
Neighborhood sanitation	●			●			●	●		●			●								Street sweeping, solid waste management.
COLLECTION SYSTEM CONTROLS[c]																					
Sewer separation	●			●	●		●				●	●	●	●		●	●				May require separate treatment systems.
Sewer flushing and cleaning	●			●	●		●	●		●			●		d						To date generally limited to small pipelines or infrequent applications.
Improved regulators and tide gates	●	●		●			●			●			●			●					Positive control, increased diversion to treatment.
Remote monitoring with supervisory control	●	●			●		●	●			●			●		●					Provides storage, discharge options.
Fully automated control	●	●			●	●		●			●			●	●	●	●				Automates storage, discharge options.
STORAGE AND TREATMENT																					
Storage	●	●		●	●		●	●		●	●		●	●		●					Tunnels, quarries, basins.
Physical treatment with and without chemicals	●			●			●	●	●	●			●						●	●	Fine screening, microstraining, sedimentation filtration, dissolved air flotation, swirl/spiral separation.
Biological treatment					●			●		●	●		●						●	●	Contact stabilization, trickling filters, lagoons, rotating biological contactors. Generally associated with continuously operated plant.
Physical-chemical				●	●			●		●			●	●						●	Precipitation, filtration, adsorption, ion exchange, air stripping.
Disinfection											●					●			●		Chlorination, hypochlorination, ozonation, chlorine dioxide.
INTEGRATED SYSTEMS (Varies)	●	●		●	●	●	●	●	●	●	●	●	●	●		●	●		●	●	Most common master plan approach.

a. Details on specific alternatives may be found in Part III, "Management Alternatives and Technology." Although classifications are thought to be generally representative, significant departures may be expected on a limited application.

b. ENR = 2000.

c. Polymer addition to increase flow capacities by reducing line friction may also be considered. Generally it is a temporary measure.

d. No large scale applications for cost assessment.

this material finds its way into storm runoff, etc.). What can be accomplished and what it will cost can be estimated most effectively by reexamining the city's current practice and a general site inspection.

Collection system controls utilizing in-system storage represent promising alternatives in areas where conduits are large, deep, and flat (i.e., backwater impoundments become feasible) and where interceptor capacity is high. Where interceptor capacity is available but trunk lines are steep or slopes are broken up, the same effect may be feasible with supplemental off-line storage. Upstream off-line storage may have an added benefit of reducing line surcharging. Improved regulators are generally essential, and remote monitoring and control are highly desirable. Flexibility and low capital cost are the major assets of collection system controls, and sophistication and high maintenance are the major drawbacks. Sewer separation has many limitations, including effectiveness, inconvenience to the public, time required for implementation, and cost.

Storage and treatment alternatives are strongly influenced by input hydrology and the capacities and limitations of available facilities--interceptors and treatment works. Storms are generally an unpredictable series of events characterized by hydrographs of rapidly changing peaks and valleys extending over limited durations. For this reason, storage facilities ahead of treatment can be used to level the peaks and valleys into rates of flow more suitable for treatment. Also, very large storage capacities may fully capture one or more storm events, allowing treatment to be deferred and/or the rate reduced to match available capacities most effectively.

To obtain a good balance between storage volume, treatment rates, and overflow occurrences, simplified computer programs have been developed and applied [4, 1]. Typically, continuous rainfall data on a daily or hourly basis are input to these programs and they are used to compute runoff, route it through a single specified storage volume with a specified withdrawal (treatment) rate, and list the times, durations, and quantities of overflow. In this manner, many alternative storage/treatment combinations can be rapidly compared and preliminarily assessed as to capacities required to meet selected overflow criteria (quantity and frequency). Having a provisionally defined capacity, the treatment process can be varied to satisfy quality objectives and, perhaps, to relieve dry-weather flow deficiencies.

The final step of a "first cut" analysis should be in the form of a summary tying together program objectives, system strengths and weaknesses addressed, and alternatives studied and accepted and/or discarded. Integrated approaches coupling two or more categories should be fully explored, and a listing of the best feasible alternatives should be derived. Comparisons with programs undertaken in other areas should be considered.

Candidate Evaluation: Data Needs

In this step, attention is directed to detailing the selected alternative plans as to costs, efficiencies, objective achievement, land requirements, environmental effects, operation feasibility, and social and political acceptance.

Of greatest importance is the assessment of additional data needs and the programming of data acquisition. The latter may require several years of effort, including flow measurement and sampling, and may include pilot and prototype storage/treatment operations. Considering the scale of the projects involved, this time requirement is not unreasonable; rather, it is a factor to be used to great advantage in program implementation (i.e., optimizing the data benefits of the test facilities). Assessment procedures are discussed in Section VI, Evaluation Procedures and Criteria.

Each candidate plan should be developed to identify the number, sizes, locations, and functions of facilities required. Preliminary basic design decisions should be made, conceptual schematic drawings completed, land requirements defined, and alternative sites selected. Subsurface and site investigations should be sufficient to identify the adequacy of the proposed construction and to permit preliminary cost estimating. Operation and maintenance of storm flow management facilities introduces new and perhaps unfamiliar requirements, particularly in such areas as startup and shutdown procedures, sustaining (non-storm) maintenance, support supplies, and solids handling and disposal. Typical problems and procedures, introduced in Section XV, Operation and Maintenance, are among those which should be addressed in the planning process. Ties to the existing system and programs should be indicated, and functional staging of the construction should be anticipated. Public involvement should be encouraged, and close liaison should be maintained with agencies having jurisdiction and other concerned parties.

Objectives should be reassessed and potential program performance should be set forth. Mathematical model approaches, such as those described in Section XIV, intensive demonstration project review, and results of local monitoring and pilot testing should be considered, and further candidate screening should be accomplished. A conceptualized block drawing of the planning process is shown on Figure 6. While the setup is specifically designed for computer coding, the basic functions and sequence of operations are generally typical of any approach method.

SELECTION AND IMPLEMENTATION OF FINAL PLAN

Through the preceding analyses, sufficient documentation should have been accumulated and systematically reported upon to permit formal program recommendation and review, and adoption by the public and jurisdictional agencies. Points of issue may still remain; however, the concept and initial program of approach must be approved, and funding must be authorized. Logically, the plan approved will provide the best combination of the following:

- Satisfaction of program objectives
- Maximum use of existing facilities
- Earliest relief of existing problems
- Widest public acceptance
- Achievability within cost/funding constraints
- Suitability to effective staged implementation
- Flexibility to meet changing needs and technology
- Beneficial reuse/aesthetics
- Minimum adverse impact on environment both during and after construction
- Coordination with other programs
- Auxiliary benefits

Recognizing the limitations in available data and the relative immaturity of the state-of-the-art, programs should be scaled and implemented accordingly. That is, if the success of a program is to hinge on the ability of a particular process or facility to perform up to a certain standard or

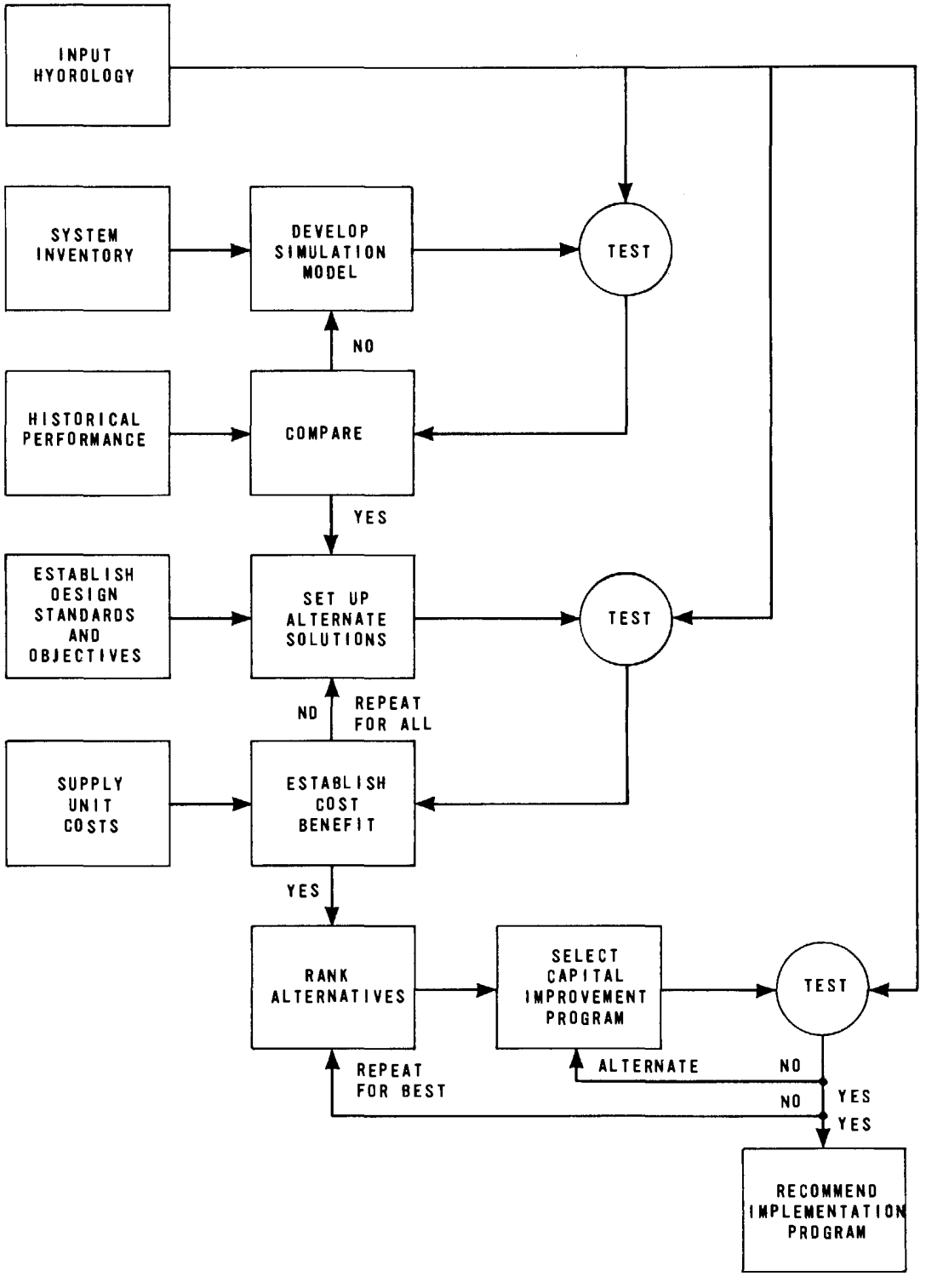

Figure 6. Conceptual computer application for master drainage planning for water quality control

on the presumption of a specific degree of uniformity in the wastewater flow and characteristics, then these key principles should be put to physical tests as soon as possible in the program. Likewise, if the existing treatment facilities will be subjected to increased loadings or substantially altered characteristics under the proposed program, pilot testing or alternative means should be implemented to determine the effects on plant performance and operation. Further, if extended periods of wastewater, chemical, sludge, or screenings storage is anticipated, the limitations and consequences should be determined early in the program. If a proposed system control scheme may subject certain portions of the collection system to temporary surcharge loading conditions, then, of course, the piping should be checked for these loadings or fail-safe safety devices should be provided.

This text has been structured so that, as the reader progresses through the subsequent sections, he will become meaningfully aware of the state-of-the-art in Urban Stormwater Management and Technology in the context of problem identification and practicable countermeasure application.

Section V

THE STORMWATER PROBLEM

Water pollution from combined sewer overflows, surface runoff either collected separately or occurring as nonsewered runoff, and overflows of infiltrated municipal sewage resulting from precipitation are all aspects of the stormwater problem. In this section the emergence of the problem, the characteristics of stormwater discharges, the sources and movements of pollutants, and the environmental effects of stormwater discharges are presented and discussed.

EMERGENCE OF THE STORMWATER PROBLEM

Is there a stormwater problem? The main objective of this section is to demonstrate that essentially every metropolitan area of the United States has a stormwater problem. Whether a city has a combined sewer system, or a separate sewer system, the disposal of stormwater contributes large quantities of pollutants to nearby receiving waters. Even nonsewered urban runoff has been shown to be a significant pollution source [1]. To understand clearly the various aspects of the stormwater problem, it will be helpful to review the development of sewer systems.

Historical Development of Sewer Systems

Even in ancient Rome the need to remove rainfall runoff was recognized. Buildings, plazas, and streets of nonporous materials interfered with natural percolation and runoff processes. To remove these excess waters the Romans constructed large underground drains--the first storm sewers. As cities developed in Europe and later in North America, extensive drainage systems for stormwater runoff were provided. These drains usually discharged to the nearest water body. They were reserved for removing stormwater; solid wastes and human excretion were excluded by ordinance. Most of these early storm sewers were designed and constructed poorly. Because of stone and brick construction

large volumes of water infiltrated into the sewers, thereby reducing the capacity for their intended purpose. In many cases, because the drains were not sloped properly stagnant underground pools developed after storms.

The traditional methods utilizing privies and "night soil" transport for the disposal of human wastes could no longer be used with the intense population densities fostered by the industrial revolution. In the slums, courtyards and living areas became fouled with excrement and wastewater [21]. Also, medical and civil authorities were beginning to realize the interrelationship between filthy living conditions and disease epidemics. To effect a remedy, in London in 1815, the law was changed to allow disposal of sanitary wastes via the storm sewers. Hence, what had originally been storm sewers became combined sewers, receiving both storm drainage and municipal sewage. Similar actions occurred in Boston in 1833 and Paris in 1880. However, most houses in these cities had neither indoor sanitary facilities nor connections to the sewers until many years later.

It was not until the latter part of the nineteenth century that it was recognized fully that the problem of enveloping filth had not been solved but merely transferred from the land to the receiving waters. Those cities less favorably situated with respect to their receiving waters initiated the practice of treating municipal sewage prior to discharge. In other cases, small waterways that became receiving waters, such as Tiber Creek traversing the Mall in Washington, D.C., were totally enclosed and annexed into the combined systems.

To capture the municipal sewage, interceptor sewer systems were developed to bring dry-weather flow to central locations for treatment. Since interceptor and treatment systems were usually (and most still are) designed to convey or treat only dry-weather flows, relief points were constructed at junctions between trunk sewers and interceptor sewers. These relief points divided the flow during storms when the combined sewer might be carrying 5, 50, or even more times the dry-weather flow. A portion of the combined sewage was intercepted and treated (up to 3 times the dry-weather flow rate intercepted on the average [27] with approximately half of this receiving some treatment). The balance, untreated, discharged directly to the receiving water. Since the portion of the annual municipal sewage which discharged without treatment was small (commonly estimated between 2 and 8 percent), it was not thought to be significant. In addition, relief points were also constructed on the interceptor system just ahead of the treatment plant.

In line with the more recent practice of installing sewer systems for conveying separate municipal sewage, it is surprising to note that, at first, this was not done to protect local receiving waters. According to the 1928 text, American Sewerage Practice, by Leonard Metcalf and Harrison P. Eddy [21]:

> The construction of a system of separate sewers without a system of storm drains, or with only a partial one, has become common practice in small communities, and is somewhat prevalent in the larger cities. This has been due generally to economic necessity, either real or fancied. The small towns frequently consider it financially impossible to finance an adequate system of combined sewers, and it is often possible to allow storm water to flow in gutters and in natural water courses for many years after the necessity for separate [sanitary] sewers has become pressing.

However, in some cases separate sewer systems were designed "...where the river or creek is so small that even diluted sewage from storm-water overflows would be objectionable, especially when the water is to be used for domestic purposes at no great distance below the town" [21]. As American cities expanded, combined sewer overflows--even to large water bodies--became objectionable, and the installation of separate sewer systems became standard practice.

For the past 25 years most cities and towns have required that all new buildings be provided with separate sewer systems, one for sanitary wastes and one for storm drainage. However, most of the largest and oldest cities in the nation still have combined sewers in a major portion of their service area (Table 7).

The proportions of the U.S. population served by combined sewers, separate sewers, and no sewers, as projected from 1962 data, are indicated on Figure 7 [27].

Generally, the urban areas which were settled earliest are the ones with the greatest proportion of combined sewers. Figure 8, based on the 1962 USPHS inventory, shows that combined sewers are most extensively used in the northeast and the Great Lakes region. The average population density of combined sewer service areas is 13.1 persons per acre, as compared to 7.4 persons per acre for separate sanitary sewer service areas. The high average population density of combined sewer areas is indicative of the problem with

Table 7. PREDOMINANT TYPE OF SEWER SYSTEM IN THE 20 LARGEST U.S. CITIES, 1900 and 1970[a]

20 Largest cities of 1900			20 Largest cities of 1970		
	Type of system			Type of system	
City	Separate sewer	Combined sewer	City	Separate sewer	Combined sewer
New York		X	New York		X
Chicago		X	Chicago		X
Philadelphia		X	Los Angeles	X	
St. Louis		X	Philadelphia		X
Boston		X	Detroit		X
Baltimore	X		Houston	X	
Cleveland		X	Baltimore	X	
Buffalo		X	Dallas	X	
San Francisco		X	Washington		X
Cincinnati		X	Cleveland		X
Pittsburgh		X	Indianapolis		X
New Orleans	X		Milwaukee		X
Detroit		X	San Francisco		X
Milwaukee		X	San Diego	X	
Washington		X	San Antonio	X	
Newark		X	Boston		X
Jersey City		X	Memphis	X	
Louisville		X	St. Louis		X
Minneapolis		X	New Orleans	X	
Providence		X	Phoenix	X	

a. The entire metropolitan area is not included.

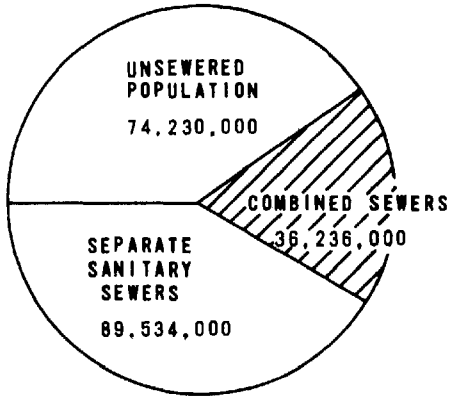

1962 TOTAL SEWERED POPULATION 125,770,000

Figure 7. Relative use of combined sewers in the United States [21]

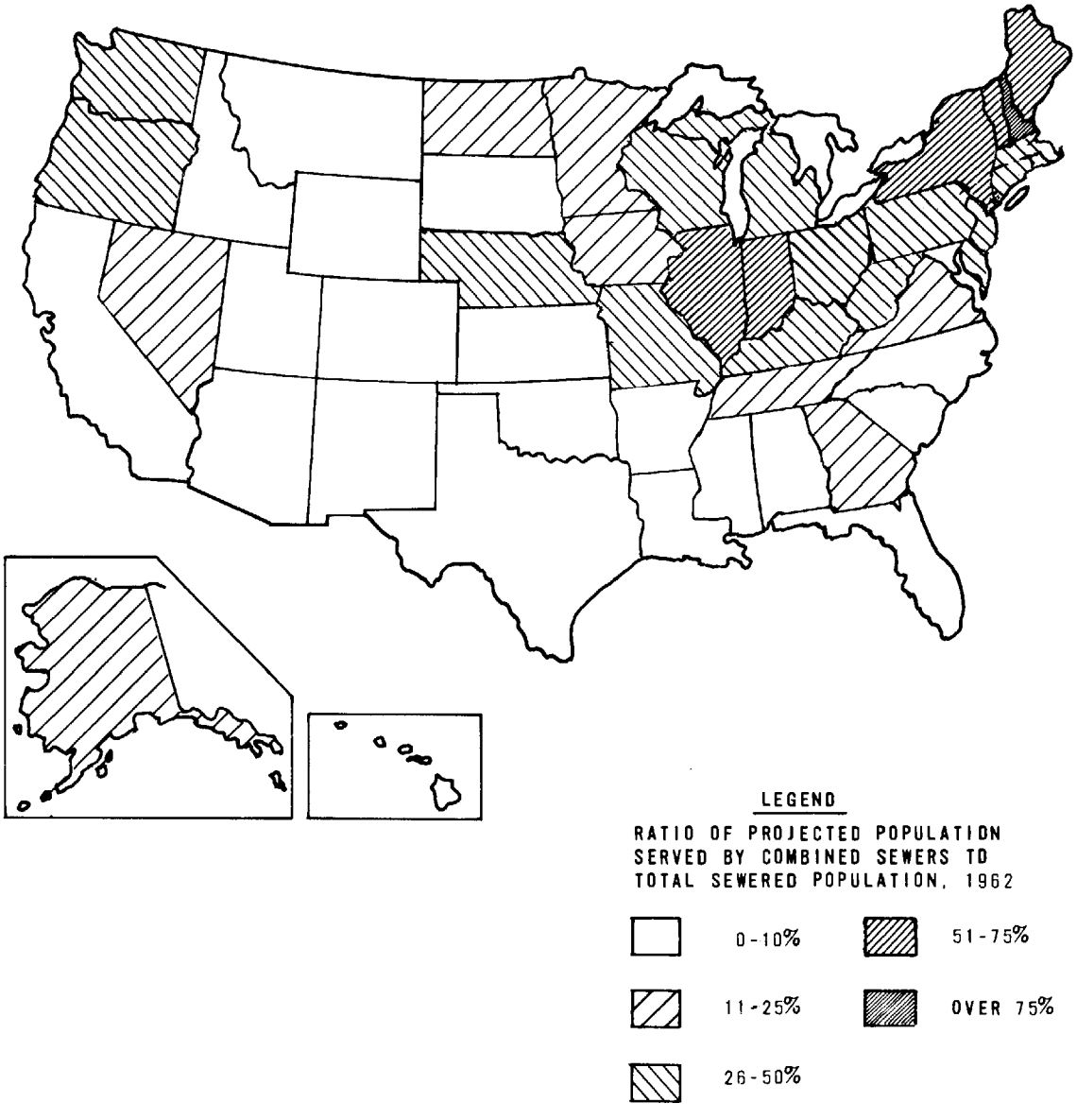

Figure 8. Relative use of combined sewers by states [21]

sewer separation in many cities--it is costly in terms of construction and mass inconvenience to excavate in heavily built-up areas.

The Stormwater Problem – Its Multiple Facets

The stormwater problem is not peculiar to combined sewer systems. The nation's demand for clean streams, lakes, bays, and coastal waters requires an evaluation of the quality of *all* waters that flow into them. These include rural and agricultural area runoff, water pollution control plant effluents, industrial wastewaters, combined sewer overflows, storm sewer discharges, and overflows of infiltrated municipal sewage. The latter three discharges constitute the urban stormwater problem.

Combined Sewer Overflows – According to McKee [20], once the pavement is wetted, a rainfall of only 0.025 cm/hr (0.01 in./hr) will cause combined sewer overflows in Boston. The difficulty in alleviating this overflow problem in Boston is great. With a treatment system for combined wastewater designed to handle up to 3 times the dry-weather flow, 73 percent of the sanitary wastewater would still overflow during a 0.25 cm/hr (0.1 in./hr) storm. During the summer this would produce an average of 5 to 6 overflows each month.

One of the worst aspects of combined sewer overflows is that, in spite of dilution by stormwater, the gross BOD_5 loading of the tremendous volume of wastewater is often greater than that of the dry-weather flow. Large flows during storms not only wash pollutants from the air and city surfaces into the sewers, but also flush out deposited material (Figure 9). During dry weather, deposits of silt and sludge often accumulate at sewer joints and in poorly sloped sewer lines only to be flushed out during a storm. The resulting shockload may turn a healthy stream or lake into a septic health hazard.

The weakest element in a combined sewer system is the regulator control point. For example, through faulty operation, untreated discharges can be released to receiving waters at any time. In tidal and flood zones, gross influxes of estuarine and fresh waters into the conveyance and treatment systems may occur (Figure 10).

The adverse effects of combined sewer overflows on receiving waters were largely responsible for the requirement that separate sewer systems be installed in newly constructed areas. In some cities programs of "separating" existing

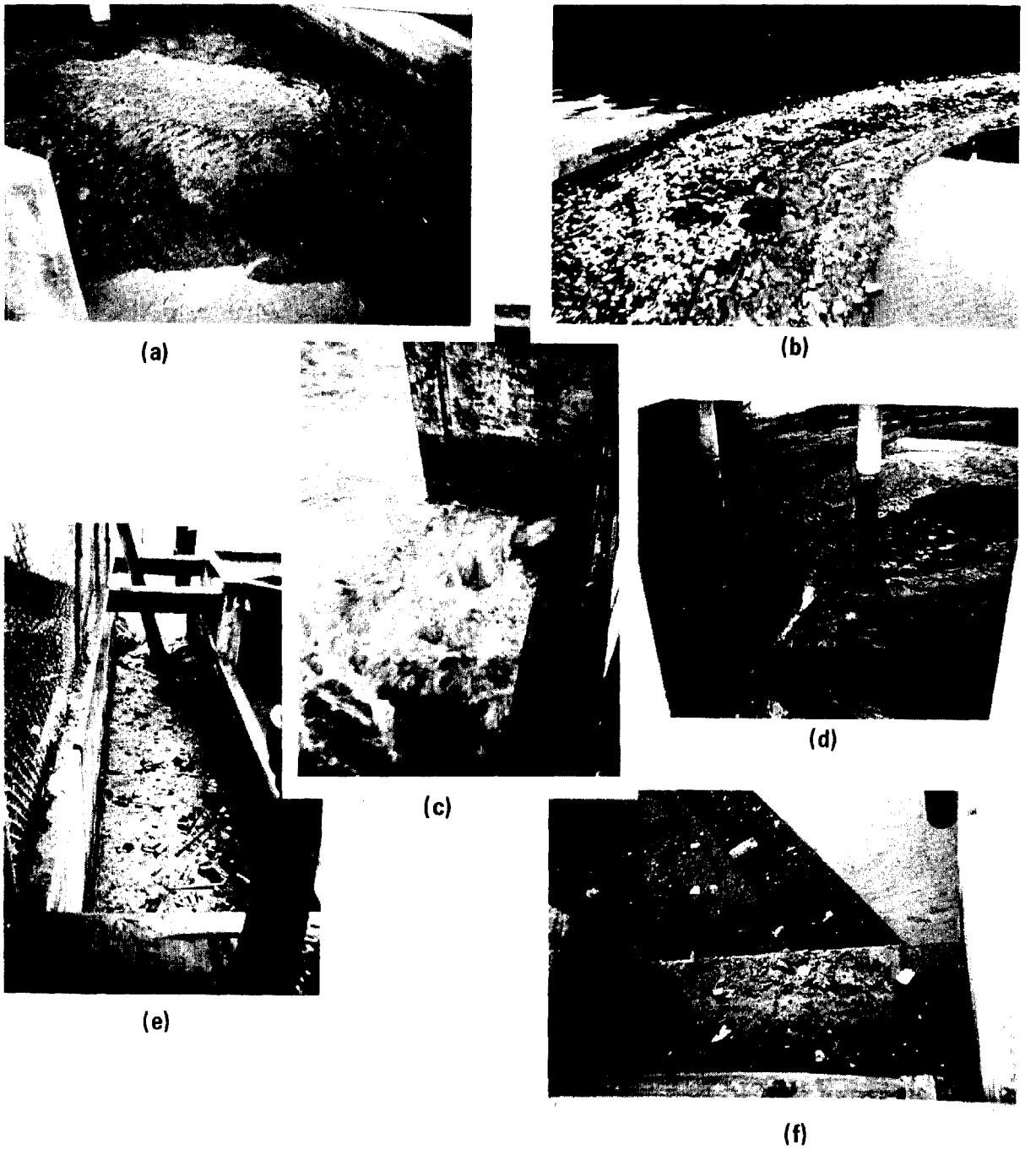

Figure 9. The stormwater problem—combined overflow residuals

(a) Solids in overflow structure after intense storm, the next storm's "first flush"
(b) Floating debris trapped by log boom across stream receiving combined overflows
(c) Overflow occurring at tide gate (d) Interior of gate structure after storm
(e,f) Exterior of gate structures after storm

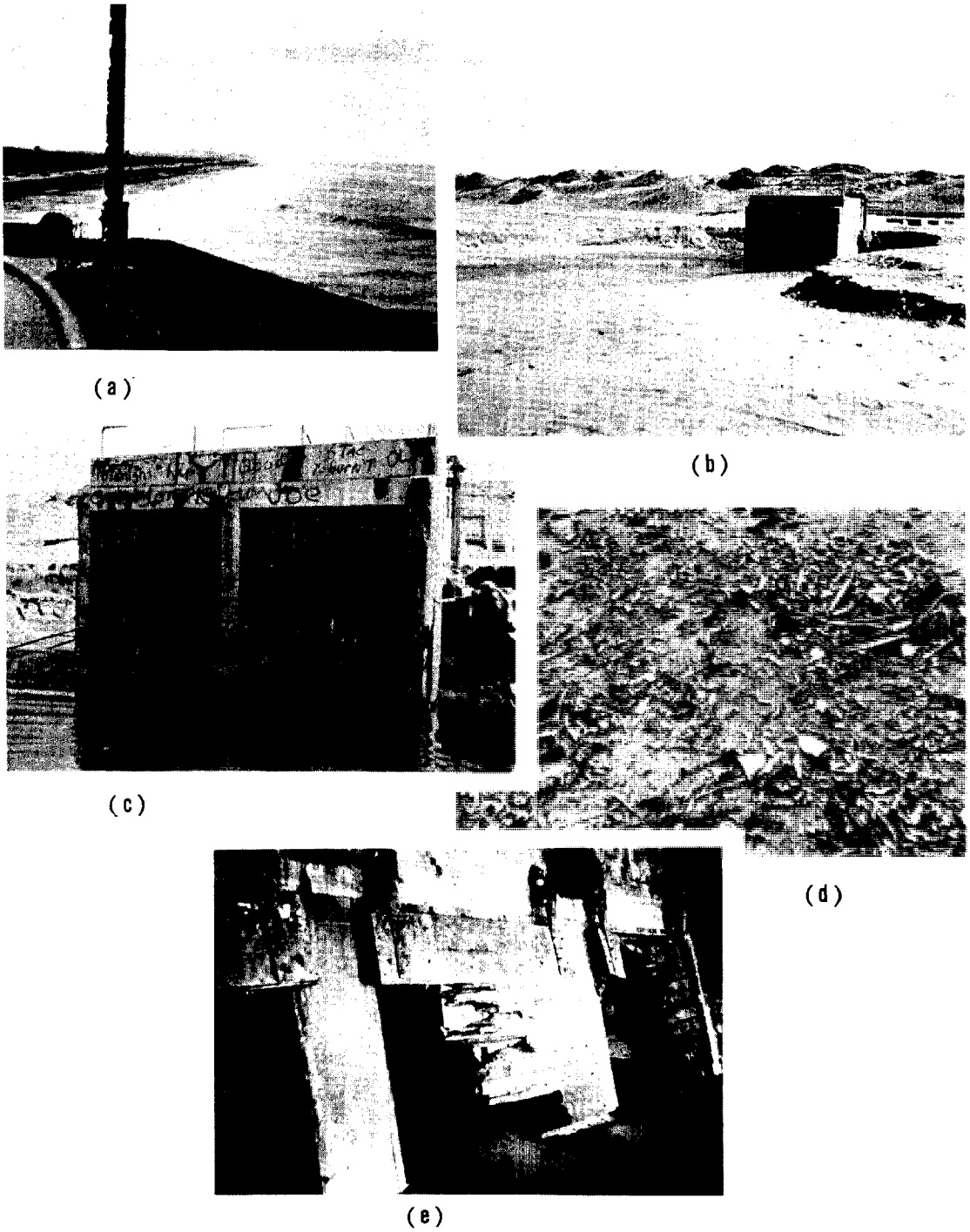

Figure 10. The stormwater problem – beach degradation

(a) Typical combined overflow site (b) Beach scour from force of overflow (c) Residuals on final bar rack (d) Residuals on beach (e) Tide gate remnants (inflow source)

combined sewers have been started. Some of these programs have been completed, others have been halted. In a 1967 APWA study [27], the cost of converting existing combined sewers to separate sewers was estimated at $90 billion (revised to ENR 2000) not including the inconvenience to the local population while city streets are torn up during construction. Even this would not eliminate the stormwater problem because the pollution from untreated storm discharges and the overflows from heavily infiltrated sanitary sewer systems would not be corrected.

Storm Sewer Discharges – Within the past 20 years, it has been recognized that waters discharged from separate storm sewers contain pollutants. Even without the addition of sanitary and industrial wastewaters, storm sewer discharges are usually high in SS and on occasion may have BOD_5 concentrations approaching those in municipal sewage. Rain falling on an urban area picks up pollutants from the air, dusty roofs, littered and dirty streets and sidewalks, traffic byproducts (tire residuals, vehicular exhaust), galvanic corrosion particulates, and chemicals applied for fertilization, control of ice, rodents, insects, and weeds. Have you ever noticed the clean air after a rainfall? Air pollutants have been returned to the earth. Erosion of hillsides and construction sites caused by rainfall can produce extremely high concentrations of inorganic SS--frequently several times higher than those in municipal sewage. Unauthorized or intentional cross-connections with sanitary or industrial sewers are common.

Very few sanitary districts have considered storm sewer discharge as a pollution problem. It was thought that sewer separation would produce two flows--the polluted sanitary flows and the clean storm flows. Studies by the EPA and others have shown this not to be the case. This is not to say that separate sewers are not advantageous in some cases. In many situations, it will be advisable to give different types or levels of treatment to the separate wastewaters depending upon program objectives (see discussion in Section IV).

Overflows of Infiltrated Municipal Sewage – Most sanitary sewers in the United States are *de facto* combined sewers. Stormwater enters these sewers through cracks, unauthorized (and sometimes authorized) roof and area drains, submerged manhole covers, improperly formed or deteriorated joints, eroded mortar in brick sewers, basement and foundation drains, and poorly constructed house connections. A comparison of dry- and wet-weather flows in separate sanitary sewers for various cities is presented in Table 8. The increase in flow during wet weather ranged from 21 percent

Table 8. COMPARISON OF DRY- AND WET-WEATHER FLOWS IN SEPARATE SANITARY SEWERS FOR VARIOUS LOCATIONS [28]

Location	Year	Population	Dry-weather flow[a]		Wet-weather flow[a]		Remarks
			mgd	cu m/day	mgd	cu m/day	
Duluth, Minn.	1967	110,000	11.3	42,750	30.0	113,500	Bypassed storm flow not included
Denver, Colo.	1956	510,000	40.0*	151,400*	57.0*	216,000*	--
Grand Island, Neb.	1962	26,000	3.9	14,750	6.7	25,350	--
Leavenworth, Kan.	1967	41,000	5.0*	18,950*	10.0*	37,850*	Much wet-weather flow bypassed
Bay City, Mich.	1967	60,000	16.0	60,500	70.0	265,000	Considerable flow bypassed
Dallas, Tex.	1960	715,500	117.0	442,500	226.0	855,000	Wet-weather flow estimated
Mission, Township, Main Sewer District No. 1, Johnson Co., Kan.	1969	50,000	17.5	66,200	104.0	394,000	--
Holland, Mich.	1969	19,300	4.3	16,300	5.22	19,750	Wet-weather flow estimated
Austin, Tex.	1966	270,000	19.4*	73,500*	46.5*	176,000*	--
Hays, Kan.	1965	15,600	2.5	9,460	4.7	17,800	--
Paragould, Ark.	1962	7,700	1.1	4,160	6.0	22,700	Wet-weather flow estimated
Osawatomie, Kan.	1966	4,700	1.2	4,540	2.9	10,980	Wet-weather flow estimated
Sheridan, Wyo.	1960	11,500	4.3	16,300	17.0	64,300	Some seepage from irrigation ditches
Billings, Mont.	1960	50,500	10.8	40,800	17.7	66,900	--
Billings, Mont.	1968	59,500	10.5	39,700	14.0	53,000	Following program to reduce infiltration

a. All flows are peak, except those marked (*) which are average.

in Holland, Michigan, to 495 percent for Mission Township, Main Sewer District No. 1, Johnson County, Kansas. It is noted that, in addition to the large wet-weather flows recorded, considerable unmeasured amounts of the flow were bypassed in several of the systems. This table includes peak flows for some cities and average flows for others.

Water Pollution Control Plant Bypasses – A special category of combined sewage overflow occurs just upstream of the treatment facilities. Generally, all flows up to the system transport capacity, unless purposely diverted, are carried to the water pollution control plant. A portion of the flows exceeding transport capacities pond in low areas until system capacity is available or they are reduced by percolation into the ground, and/or are diverted either to storm drains or directly to receiving waters. Of the flows arriving at the plant, not all may be treated.

Most water pollution control plants are designed to function properly at flows up to some low multiple of the average dry-weather flow. Typical multiples range from 1.5 to 3.0. Incoming flows exceeding the plant or unit process capacity must be bypassed, sometimes with partial treatment, to the receiving water. This occurs at both wastewater treatment plants connected to combined sewers and, in many cases, those connected to technically "separate" sanitary sewers.

In addition to the need to bypass peak wet-weather flows because of capacity limitations, it is sometimes necessary to bypass because of detrimental changes in wastewater quality. In a study of stormwater problems and control in Oakland-Berkeley, California, sanitary sewers [34], it was reported that bypassing was required at the regional water pollution control plant under storm conditions at flows less than 50 percent of the plant's hydraulic capacity. Typically, the large increase in fine solids (silt) concentration in the wastewaters required bypassing to avoid damage to the solids removal equipment in the primary sedimentation tanks. This silt, too fine to be removed in the grit chambers, settled in such quantities in the sedimentation tanks that the chain and flight collectors were buried and unable to function. Sources of the silt were traced to multiple cracks and poor joints in the collection system. As stormwaters saturated the soil, silt-laden flows would enter the system and in the process compound their impact by scouring out deposits of grit accumulated in the pipes during dry-weather periods.

In San Francisco, with a hydrologic year characterized by extended dry- and wet-weather periods, the initial seasonal storms in the combined system carry debris, representing

several months' accumulation, in such quantities as to greatly overload headworks screening facilities. This creates a bypass condition generally not repeated in later storms [15].

In some cases it has been necessary to bypass prolonged storm flows because low organic matter concentrations would not support the biological treatment units [25]. Elsewhere intense hydraulic loadings during storms may purge biological process solids from final clarifiers and/or filters, critically upsetting the process, if temporary bypasses are not permitted. Still other plants bypass during wet weather because increased inorganic concentrations in the sludge pumped to anaerobic digesters greatly reduce their effective volume.

CHARACTERISTICS OF STORMWATER

Quantities of Flow

The potential problem that stormwater represents to all wastewater disposal systems can be demonstrated with some simple calculations. For example, in the Chicago metropolitan area where the average daily dry-weather wastewater flow is 48.2 cu m/sec (1,100 mgd), a storm with an intensity of only 0.25 cm/hr (0.1 in./hr) over the 97,000 ha (240,000 acres) within the area represents a flow of

$$0.25 \text{ cm/hr} \times 97{,}000 \text{ ha} \times 100 \text{ cu m/cm-ha}$$

$$\times\ 1/3{,}600 \text{ hr/sec} = 686 \text{ cu m/sec } (18{,}000 \text{ mgd})$$

Of course, large portions of the drainage basin are still pervious so that much of the rainfall will permeate into the soil. Also, there will be significant portions of nonsewered direct runoff into creeks and waterways. Even so, if the runoff coefficient is 0.50, under average conditions the flow in the combined sewer system would increase 720 percent. Consider what would happen if a large storm with an intensity of 2.5 cm/hr (1 in./hr) covered the Chicago metropolitan area! Summer thunderstorms of even greater intensity occur every year, although they rarely cover the entire basin at one time.

In fact, the stormwater problem in Chicago is severe for a number of reasons. Sewer surcharging and widespread flooding is common. In addition, as the imperviousness of the area has increased with development, it occasionally has become necessary to allow combined wastewater to backflow

into Lake Michigan to minimize flooding. The lake, which is used for water supply and for recreation, does not receive dry-weather flow from Chicago. Most combined wastewaters from Chicago discharge to several channels that eventually empty into the Illinois River system. Chicago has undertaken a series of studies to determine the best way to alleviate the flooding and pollution. Current estimates for wet-weather improvements are for eventual expenditures of approximately $1.32 billion. The program is described further in Section XIV.

To describe the proportion of precipitation that enters a combined or separate sanitary sewer, an *infiltration ratio* may be computed. This is the ratio of rainfall entering sewers to the total rainfall and thus includes both infiltration and inflow as defined in the 1972 Act Amendments. For combined sewers, the infiltration ratio may be equivalent to the runoff coefficient. In an EPA-sponsored study of the wastewater collection/treatment area, 20,800 ha (51,400 acres), of the East Bay Municipal Utility District (Oakland/Berkeley, California) [34] an overall infiltration ratio of 0.11 was computed. However, 30.6 percent of the stormwater in the system was traced to the 4 percent of the study area served by combined sewers. The measured infiltration ratios for the combined areas were as high as 0.70 and the separated areas ranged from 0.01 to 0.25 with values of 0.06 to 0.14 predominanting. In general, high ratios were associated with old sewers, those with rigid joints, and land areas having gentle ground slopes.

St. Louis, Missouri – One often-reported measurement of the overflow from combined sewers is the proportion of the annual dry-weather flow that either overflows or is bypassed. According to Shifrin and Horner, 2.23 to 3.09 percent of the annual municipal sewage of St. Louis is discharged without treatment during combined sewer overflows [30]. The relationship between combined sewer overflow of untreated municipal sewage and interceptor capacity for St. Louis in 1960 is shown on Figure 11. Of course, if the hydraulic capacity of the treatment plant is less than the interceptor capacity, then significant additional amounts must be bypassed at the treatment plant.

Washington, D. C. – According to a study of the combined sewer areas of Washington, D. C., during the years 1956-1958, an average of 3.3 percent of the annual municipal sewage was discharged to the Potomac River system through overflows [30]. Of this quantity, 0.3 percent discharged during dry weather because of an overloaded sewer system. Air conditioning cooling water is in part responsible for these dry-weather overflows.

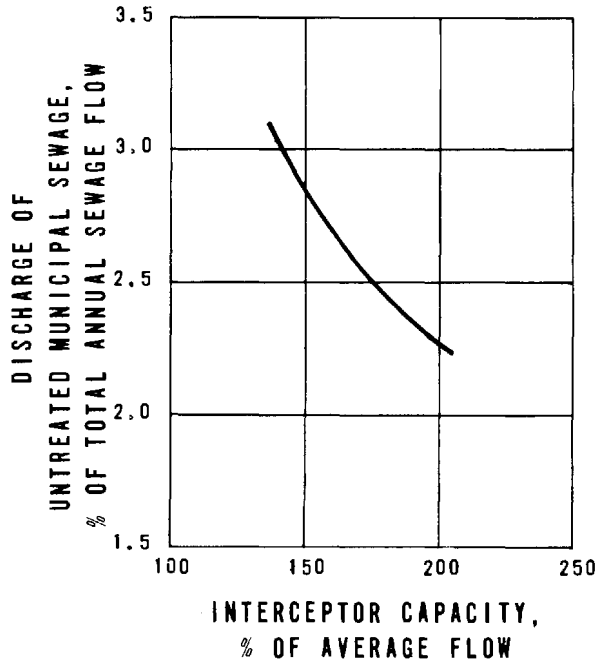

Figure 11. Effectiveness of interceptors of different capacities for 1960 [30] St. Louis, Missouri

Oakland, California, and Vicinity – The heavily infiltrated sanitary sewer system of the East Bay Municipal Utilities District required treatment plant bypasses of 1.7 percent of the annual average municipal sewage flow during 1969-1970 [34]. In addition, intersystem overflows (occurring at cross-connections between storm drains and sanitary sewers), interceptor overflows, and intrasystem overflows (from manholes, other openings, and broken sewers) also contributed to the discharge of untreated municipal sewage to San Francisco Bay. As shown in Table 9, it has been found in other studies of combined sewer systems that, typically, 2 to 5 percent of the annual municipal sewage is "lost" during wet weather [11, 23, 9].

In the past it was thought that if only 2 to 5 percent of the annual municipal sewage flow was discharged by wastewater collection systems without treatment, then the system was working well. After all, an efficiency of 95 to 98 percent on an annual basis seems impressive. Actually, it is not impressive on two counts. First, by reporting

Table 9. COMPARISON OF ANNUAL MUNICIPAL SEWAGE BYPASSED OR OVERFLOWED FOR VARIOUS CITIES

City	Year	Sewer system	Annual % overflowed
Cleveland, Ohio	1960	Combined	2.23-3.09
Washington, D.C.	1956-58	Combined	3.3[a]
Oakland (and vicinity), California	1968	96% Separate, 4% Combined	1.09[b]
Roanoke, Virginia	1964-68	Separate	1-2
Minneapolis-St.Paul, Minnesota	1966	Combined/ separate	up to 6
San Francisco, California	1972	Combined	1.7

a. This is only for the combined sewer portion of the system.

b. Only includes bypasses of treatment plant. Additional flow is lost through sanitary overflows into storm sewers.

municipal sewage lost as a percentage of annual municipal sewage collected, the shockloading effect of stormwater pollution is ignored. For instance, in some rivers sufficient dissolved oxygen (DO) is present to support a wide range of biota 90 percent of the time. During wet weather, however, storm and combined sewer overflows exert such an oxygen demand that the river becomes septic and fishkills occur. In many parts of the country, summer thunderstorms dump an inch or more of rain in an hour. Because these overflows usually occur during low flow in the receiving stream, this accentuates the shockloading effect.

The second reason that a 95 to 98 percent annual efficiency for a wastewater collection system is not impressive relates to the quality of overflows and discharges.

Quality of Overflows and Discharges

Historically, few people gave any consideration to the water quality of urban runoff. It was believed that urban runoff

finding its way into a combined sewer diluted the offensive constituents of the dry-weather flow. In the case of separate sewer systems, the urban runoff entered the storm sewers. This storm wastewater was discharged without treatment because people thought that it was relatively uncontaminated. When the U.S. Public Health Service published "Pollutional Effects of Stormwater and Overflows from Combined Sewer Systems: A Preliminary Appraisal" in 1964, very few studies of urban runoff quality had been performed. The fact that the report title included "Pollutional Effects of Stormwater" indicates that at least some officials were aware of the water pollution potential of urban runoff.

In recent years, however, a considerable number of characterization studies have been performed. The reported quality parameters (e.g., BOD_5, SS, total P, total N, heavy metals, and bacteria) vary considerably in concentration. They vary not only with time as the storm progresses but also from location-to-location during the same storm and from storm-to-storm within the same location. Where the runoff is mixed with municipal sewage, as in combined sewer systems, the true picture is further obscured because the sanitary flow and its quality are also highly time-dependent (daily and weekly cycles).

Because of these multiple variations and the difficulties associated with representative sampling, relationships between cause and effect are largely obscured, even though a considerable amount of data is available.

In most studies of urban runoff it has been observed that higher concentrations of pollutants may be expected under the following conditions: the early stages of a storm (including "first flush" effects); in more densely settled, highly paved, or industrialized areas; in response to intense rainfall periods; after prolonged dry periods; and in areas with construction activities (inorganic solids). Conversely, concentrations tend to decrease as a storm progresses and in the latter storms of a closely spaced series.

Along with summarizing the available data, selected examples are presented in this section to illustrate various occurrences suggested by the data.

First Flush Effect – Very high concentrations of BOD_5, SS, grease, and other pollutants are often found in overflow samples collected during the earliest part of an overflow event from combined sewers. This phenomenon also occurs to a lesser extent with storm sewer discharges. Early investigators often noted these high pollutant concentrations and

the term "first flush" has been adopted to describe it. During dry-weather periods, the flow in most combined sewers is only a low percentage (generally less than 5 percent) of the sewer capacity. At joints and along sections of sewer with low or adverse slopes, solids tend to accumulate. In particular, older sewers were often laid with too little regard to necessary carrying velocities. The absence of a self-scouring flow is the primary cause of the first flush effect in combined sewers. Catch basins that are not cleaned promptly after a storm often accumulate solids which are discharged during the next storm. Other effects include the surface buildup of debris and pollutants through inattention or inadequate cleaning programs.

In storm sewers there is a tendency for solids to settle out during the latter stages of a storm as the flow tapers off and velocities are reduced. Also, large separate sewer systems may have relief points that allow some surcharged sanitary sewers, even on rare dry-weather occasions, to overflow into the storm sewers. The solids in the municipal sewage overflows may accumulate in storm sewers under these conditions and contribute to a first flush effect in storm sewers. A similar situation exists when storm sewers have illicit direct industrial and sanitary connections.

In combined, sanitary, and storm sewers, accumulated solids deposits may contain grease and other organic matter undergoing decay. When the sewer flow increases sharply during a storm, this solid matter which will exert a high organic loading will be discharged. Depending on the sewer system, the rainfall intensity, and the number of antecedent dry days, a first flush effect may result. If it does occur it may last for a few minutes or even hours. Solids scoured from the upper reaches of a large system may take a long time to reach a distant overflow point. *BOD_5 concentrations during this phenomenon may often exceed those of the normal untreated dry-weather wastewater.*

During 28 overflows of a large combined sewer in Milwaukee, Wisconsin, in 1969, a first flush was observed 25 percent of the time [7]. The period of high pollutant concentration lasted from 10 minutes to 1 hour. The difference in water quality between the first flush and the later flow ("extended overflow") from this particular combined sewer is reported in Table 10. These first flushes occurred when the interval between overflows was greater than 4 days.

Table 10. COMPARISON OF QUALITY CHARACTERISTICS FROM FIRST FLUSHES AND EXTENDED OVERFLOWS OF A COMBINED SEWER [7]
HAWLEY ROAD SEWER, MILWAUKEE, WISCONSIN

Characteristic	First flushes, mg/l[a]	Extended overflows, mg/l[a]
COD	500-765	113-166
BOD_5	170-182	26-53
SS	330-848	113-174
VSS	221-495	58-87
Total N	17-24	3-6
Coliforms[b]	--	--

a. At 95 percent confidence level.

b. Coliform 1.5×10^5 to 310×10^5/100 ml.

In an EPA-funded project in Cumberland, Maryland, it was observed that:

> On June 16, 1968, a rain storm producing 1/4 inch rainfall occurred after a dry period of 8 days. The Bolling Green Wastewater Treatment Plant influent was sampled according to the plan....The initial sample obtained was gray, appeared to be normal late night flow, but after only two minutes the rate began to increase rapidly and the sewage became black and gave off a very strong odor, indicating septicity. This odor did not disappear until the flow again returned to nearly normal. The results of Sample No. 2 indicate the flushing of grit and putrescible material undergoing anaerobic digestion from the bottom of the sewers. [10]

Combined Sewage – Since heavily infiltrated sanitary sewers are *de facto* combined sewers, the water quality information presented in this discussion relates to both heavily infiltrated municipal sewage and combined sewer overflows. Combined sewage is a mixture of various proportions of municipal sewage and storm runoff. For this reason, it

would seem that the concentration of any single pollutant in combined sewage would lie somewhere between that of local municipal sewage and that of local urban runoff. Even though it may seem so, it is often not the case, mainly during the early portions of a storm. The previously described first flush effect often results in short periods when combined sewage exhibits greater strength than separate municipal sewage. When deposition problems are severe and/or the collection systems extensive, the high concentration conditions may persist for several hours. In other instances, strong industrial wastes may be discharged (unauthorized) during storms, perhaps in the form of waste lagoon spills, in the belief that the additional dilution available will lessen the impact of the discharge on the treatment plant.

Because of the variation over time, it is also somewhat misleading to report mean characteristics of combined sewage quality. This is also true, but to a lesser extent, for separate storm runoff. Average values for the various characteristics can be mean over time or mean over flow. Furthermore, the first 10 minutes, the first 30 minutes, or some other duration of the overflow may not be included in the calculations of a quality characteristic mean. In spite of the possible confusion, most investigators have reported "mean" characteristics of combined sewage to give a general indication of quality. Some of these findings and values for typical untreated and treated municipal sewage (primary and secondary effluent) are summarized in Table 11. Unless otherwise noted, tabulated values are mean over flow (also referred to as "flow-weighted mean"), the preferred definition of "mean."

In contrast to urban runoff quality, which may be highly dependent upon runoff intensity, time since start of rainfall, and antecedent dry period, *combined overflow quality may be affected significantly by the hour of storm occurrence*. It is commonly known that dry-weather flows and quality concentrations follow cyclical patterns over daily and weekly periods. What is of particular interest is that the cycle peaks for both flow and quality (e.g., BOD_5) frequently occur together, resulting in a compound effect. In a prior study of San Francisco data on dry-weather flows, it was noted:

> Measured values of both flow and quality variations showed extreme variation of pounds of [BOD_5] released per 10-minute interval exceeded a ratio of 50 to 1 (largest 10-minute release divided by the smallest) in <u>one</u> day. [32]

Table 11. COMPARISON OF QUALITY OF COMBINED SEWAGE FOR VARIOUS CITIES[a]

Type of wastewater, location, year, Ref. No.	BOD_5, mg/l		COD, mg/l		DO, mg/l	SS, mg/l		Total coliforms, MPN/100 ml		Total nitrogen, mg/l as N	Total phosphorus, mg/l as P
	Avg	Range	Avg	Range	Avg	Avg	Range	Avg	Range	Avg	Avg
Typical untreated municipal	200	100-300	500	250-750	--	200	100-350	5×10^7	1×10^7-1×10^9	40	10
Typical treated municipal											
Primary effluent	135	70-200	330	165-500	--	80	40-120	2×10^7	5×10^6-5×10^8	35	7.5
Secondary effluent	25	15-45	55	25-80	--	15	10-30	1×10^3	1×10^2-1×10^4	30	5.0
Selected combined											
Atlanta, Ga., 1969 [31]	100	48-540	--	--	8.5	--	--	1×10^7	--	--	1.2[b]
Berkeley, Calif. 1968-69 [34][c]	60	18-300	200	20-600	--	100	40-150	--	--	--	--
Brooklyn, N.Y., 1972 [8]	180	86-428	--	--	--	1,051	132-8,759	--	--	--	1.2[b]
Bucyrus, Ohio 1968-69 [35]	120	11-560	400	13-920	--	470	20-2,440	1×10^7	2×10^5-5×10^7	13	3.5
Cincinnati, Ohio, 1970 [36]	200	80-380	250	190-410	--	1,100	500-1,800	--	--	--	--
Des Moines, Iowa, 1968-69 [6]	115	29-158	--	--	--	295	155-1,166	--	--	12.7	11.6
Detroit, Mich., 1965 [2]	153	74-685	115	--	--	274	120-804	--	--	16.3[d]	4.9
Kenosha, Wis., 1970 [18]	129	--	464	--	--	458	--	2×10^6	--	10.4[d]	5.9
Milwaukee, Wis., 1969 [7]	55	26-182	177	118-765	--	244	113-848	--	2×10^5-3×10^7	3-24	0.8[b]
Northampton, U.K., 1960-62 [22]	150	80-350	--	--	--	400	200-800	--	--	10[e]	--
Racine, Wis., 1971 [18]	119	--	--	--	--	439	--	--	--	--	--
Roanoke, Va., 1969 [12]	115	--	--	--	--	78	--	7×10^7	--	--	--
Sacramento, Calif., 1968-69 [37]	165	70-328	238	59-513	--	125	56-502	5×10^6	7×10^5-9×10^7[f]	--	--
San Francisco, Calif., 1969-70 [3]	49	1.5-202	155	17-626	--	68	4-426	3×10^6	2×10^4-2×10^7	--	--
Washington, D.C., 1969 [5]	71	10-470	382	80-1,760	--	622	35-2,000	3×10^6	4×10^5-6×10^6	3.5	1.0

a. Data presented here are for general comparisons only. Since different sampling methods, number of samples, and other procedures were used, the reader should consult the references before using the data for specific planning purposes.
b. Only orthophosphate.
c. Infiltrated sanitary sewer overflow.
d. Only ammonia plus organic nitrogen (total Kjeldahl).
e. Only ammonia.
f. Only fecal.

The storm path and collection system configuration also have pronounced influence on combined overflow quality. For example, in a storm concentrated in the upper reaches of a drainage basin or tracing a path from upstream to downstream, flow in the conduits in the upper reaches will have greater depth and velocities as compared to the downstream portions. This can create a flood wave within the primary conduit that will accelerate the dry-weather flow in the lower area as a plug until it is released at the point of overflow. Thus, the early overflow may be totally municipal sewage. In current studies by the Department of Public Works of the City of San Francisco [4], it has been found that on the basis of system hydraulics and static regulator inefficiencies, discharge mixtures from neighboring outfalls may vary simultaneously from totally raw municipal sewage to dilute surface runoff. This is judged to be a direct consequence of static control of regulators.

Storm Sewer Discharges – Findings from various studies are summarized in Table 12 showing important characteristics of various separate storm sewer discharges in comparison with those for typical untreated and treated municipal sewage (primary and secondary effluent). The most obvious conclusion about the quality of storm sewer discharge is that it varies greatly from one metropolitan area to another. Furthermore, that a wide variation in quality can occur within a single metropolitan area is shown clearly by the data from Tulsa, Oklahoma, in Table 13 [33]. The greatest variations in quality occur in the concentrations of bacterial and suspended solids. Note that the data presented from Tulsa do not indicate the possible range of quality from a *single* test area. Storm sewer discharge quality was found to vary greatly from storm to storm and at different times during a storm. The column in Table 13 "Range of the Test Area Means" is based on the *mean* values of various water quality characteristics derived from 15 test areas.

Castro Valley, California – In a 1971-1972 study [14] of a "typical" San Francisco Bay Area urban watershed consisting principally of residential with some light commercial areas, the USGS, under contract to the Corps of Engineers, monitored seven storm events. The watershed, which drains about 13 sq km (5 sq mi) through a series of pipe networks and creeks, is about 85 percent urbanized, and has an estimated population density of 11 persons per acre. The events sampled represent 25-30 percent of the total rainfall in

Table 12. COMPARISON OF QUALITY OF STORM SEWER DISCHARGES FOR VARIOUS CITIES[a]

Type of wastewater, location, year, Ref. No.	BOD5, mg/l		COD, mg/l		DO, mg/l	SS, mg/l		Total coliforms, MPN/100 ml		Total nitrogen, mg/l as N	Total phosphorus, mg/l as P
	Avg	Range	Avg	Range	Avg	Avg	Range	Avg	Range	Avg	Avg
Typical untreated municipal	200	100-300	500	250-750	--	200	100-350	5×10^7	1×10^7-1×10^9	40	10
Typical treated municipal											
Primary effluent	135	70-200	330	165-500	--	80	40-120	2×10^7	5×10^6-5×10^8	35	7.5
Secondary effluent	25	15-45	55	25-80	--	15	10-30	1×10^3	1×10^2-1×10^4	30	5.0
Storm sewer discharges											
Ann Arbor, Mich., 1965 [2]	28	11-62	--	--	--	2,080	650-11,900	--	--	3.5	1.7
Castro Valley, Calif.,1971-72 [14]	14	4-37	--	--	8.4	--	--	2×10^4	4×10^3-6×10^4	1.9[b]	--
Des Moines, Iowa, 1969 [6]	36	12-100	--	--	--	505	95-1,053	--	--	2.2	0.87
Durham, N.C., 1968 [1]	31	2-232	224	40-660	--	--	--	3×10^5	3×10^3-2×10^6[c]	--	0.18
Los Angeles, Calif.,1967-68 [19]	9.4	--	--	--	6.9	1,018	--	--	3×10^3-2×10^6	--	--
Madison, Wis., 1970-71 [17]	--	--	--	--	--	81	10-1,000	--	--	4.8	1.1
New Orleans, La., 1967-69[d] [16]	12	--	--	--	4.5	26	--	1×10^6	7×10^3-7×10^8	--	--
Roanoke, Va., 1969 [12]	7	--	--	--	--	30	--	--	--	--	--
Sacramento, Calif., 1968-69 [37]	106	24-283	58	21-176	--	71	3-211	8×10^5	2×10^4-1×10^7[c]	--	--
Tulsa, Okla., 1968-69 [33]	11	1-39	85	12-405	--	247	84-2,052	1×10^5	1×10^3-5×10^8	0.3-1.5[e]	0.2-1.2[f]
Washington, D.C., 1969 [5]	19	3-90	335	29-1,514	--	1,697	130-11,280	6×10^5	1×10^5-3×10^6	2.1	0.4

a. Data presented here are for general comparisons only. Since different sampling methods, number of samples, and other procedures were used, the reader should consult the references before using the data for specific planning purposes.
b. Only ammonia plus nitrate.
c. Only fecal.
d. Median values from 1 sampling station.
e. Only organic (Kjeldahl) nitrogen.
f. Only soluble orthophosphate.

Table 13. STORM SEWER DISCHARGE QUALITY FROM 15 TEST AREAS [33] TULSA, OKLAHOMA

Parameter	Mean of the test areas	Range of the test area means
Bacterial, number/100 ml[a]		
Total coliform	87,000	5,000-400,000
Fecal coliform	420	10-18,000
Fecal streptococcus	6,000	700-30,000
Organic, mg/l		
BOD	11.8	8-18
COD	85.5	42-138
Total organic carbon	31.8	15-48
Nutrients, mg/l		
Organic Kjeldahl nitrogen	0.85	0.36-1.48
Soluble orthophosphate	1.15	0.54-3.49
Solids, mg/l		
Total	545	199-2,242
Suspended	367	84-2,052
Dissolved	178	89-400
Other parameters		
pH	7.4	6.8-8.4
Chloride, mg/l	11.5	2-46
Specific conductance, micromhos/cm	108	36-220

a. Geometric mean.

this dry year. A summary of the data, reproduced in Table 14, indicated that

> ...relatively high BOD can be expected from the first runoff event of the rainy season and also for other events during the year that occur after a significant dry spell. The dissolved oxygen (DO) data expressed as percent saturation shows a significant corresponding decrease associated with the high BOD. [14]

Des Moines, Iowa – In a third study [6] conducted in Des Moines, Iowa, combined sewer overflows and storm sewer discharges were sampled over a 12-month period, 1968-1969.

Table 14. STORM SEWER DISCHARGE QUALITY FROM A 5-SQUARE MILE URBAN WATERSHED [14] CASTRO VALLEY CREEK, CALIFORNIA

Parameter		San Francisco Bay[a] 1960-1964			Castro Valley Creek							
		South Bay	Lower Bay	Upper Bay	Storm of 11 Nov 71	Storm of 13 Nov 71	Storm of 2 Dec 71	Storm of 9 Dec 71	Storm of 22 Dec 71	Storm of 27 Dec 71	Storm of 25 Jan 72	Storm of 5 Apr 72
Temperature, °C	low	9.3	10.7		14.5		9.5	8.5		8.0	7.5	
	mean	16.3	14.8	14.5		13.0			11.0			15.0
	high	24.0	21.0		15.0		10.5	10.5		9.0	8.5	
pH	low	7.2	7.8		6.7	6.7	5.4	6.6	6.0	6.6	6.2	
	mean	7.6	7.9	7.7								7.2
	high	8.0	8.1		7.0	6.9	6.4	7.4	6.4	6.9	6.8	
DO, mg/l	low	0.7	7.0		4.4		9.5	9.0	9.4			6.4
	mean	5.1	7.4	7.9		8.1				10.4	--	
	high	8.3	8.5		5.1		10.3	9.6	10.0			6.9
DO, % saturation	low	9	81		43	84	79	85			63	
	mean	55	90	77					88	--		76
	high	92	99		50	90	86	90			68	
BOD_5, mg/l	low	0.5	0.4				4.0	10.0	1.7	1.7	4.7	2.6
	mean	10	0.8	.8	44	--						
	high	48	1.5				9.5	11.0	5.0	2.2	6.0	37.0
Ammonia nitrogen, mg/l	low	--	0.06		1.2	.4	.3	.1	.2	.1	.3	.3
	mean	3	0.12	.1								
	high	11	0.21		2.3	.6	.7	.4	.3	.2	.4	1.0
Nitrate nitrogen, mg/l	low	0.05	0.08		0	1.5	.6	.3		1.8	.6	0
	mean	0.35	0.34	.3					--			
	high	1.1	0.55		1.4	1.7	1.2	3.3		2.3	.9	4.2
Dissolved silica, mg/l	low	2.3	2.9									
	mean	8.7	5.4	6.5	7.1	3.3	1.5	12.0	2.2	7	3.1	7.6
	high	16	7.7									
Total coliform bacteria, MPN/100 ml	low	10	10					4,200	9,500	5,200		16,000
	mean	20,000	500	1,000	--	--	>16,000				*	
	high	3×10^8	30,000					41,000	12,500	16,200		63,000

a. From "Interim Water Quality Control Plan, San Francisco Bay Basin," California Regional Water Quality Control Board, San Francisco Bay Region, June 1971.

*Determination Pending.

With the exception of BOD_5, which was considerably stronger, the reported values were similar in range to those previously discussed. The results, however, were an aggregation of composite and grab samples of both rainfall-runoff and snow melt. A retabulation of the results for BOD_5 taken from the raw data, excluding the grab samples and separating out the snow melt, is presented in Table 15. The revised listings are consistent with the generally reported values, and it is particularly interesting to note high concentrations associated with urban snow melt.

Because of the wide range of quality of storm sewer discharge, any generalizations must not be blindly accepted. However, as mentioned previously, "typical" storm wastewater is often characterized as having (1) SS concentration

Table 15. COMPARISON OF BOD_5 FROM COMBINED OVERFLOWS, STORM DISCHARGES, AND SNOW MELT [6] DES MOINES, IOWA

Type of discharge	Mean of the test areas, mg/l	Range of the test area means, mg/l
Combined overflows (5 areas)	80	53-117
Storm sewer discharge (rain induced - 4 areas)	32	23-46
Storm sewer discharge (snow melt - 4 areas)	75	67-85

equal to or greater than that of untreated sanitary wastewater, and (2) BOD_5 concentration approximately equal to that of secondary effluent. The reasons for the great variations in the quality of storm wastewater will be discussed in a later section dealing with contaminant sources.

Stormwater Pollution Loadings

So far, storm and combined sewer overflow quantities and the pollutant concentrations have been considered separately. To evaluate the impact of these flows on receiving waters, it will be necessary to consider quantity and quality concurrently. Comparisons of the amounts of untreated storm and combined wastewaters and amounts of treated wastewaters received by a stream are only part of the story. Similarly, comparing water quality characteristics does not give a representative picture of the significance of stormwater problems. Rather, it is necessary to evaluate pollutant *loadings*, the product of quantity and concentration, which should be considered on both a storm and an annual basis.

Roanoke, Virginia – In studies sponsored by the EPA Storm and Combined Sewer Pollution Control Program, attempts have been made to evaluate the relative significance of stormwater problems. An especially lucid example comparing the impacts of dry- and wet-weather flows is in the investigation of overflows and bypasses of the heavily infiltrated sanitary sewer system of Roanoke, Virginia. The amounts

of wastewater and pounds of BOD_5 from the treatment plant, treatment plant bypasses, and sanitary sewer overflows on an *annual* basis are summarized in Table 16. Note that the BOD_5 from storm sewer discharges is not being considered. Although only 1.6 percent of the annual municipal flow is discharged through overflows or bypasses, 8.4 percent of the annual BOD_5 loading on the Roanoke River is contributed by these sources. If storm sewer discharge BOD_5 were also considered, the stormwater BOD_5 percentage would be even greater. A visual comparison of BOD_5 contributions is given in Figure 12.

On an annual basis, the 8.4 percent BOD_5 contributed by overflows and bypasses from the Roanoke sanitary sewer system does not seem especially significant. However, as indicated in Table 17 and Figure 13, wastewater volume and BOD_5 loadings during a maximum yearly rainfall event are significant. During such an event, 33.1 percent of the flow is bypassed or overflows, and this accounts for 75.7 percent of the BOD_5 loading. Hence, in Roanoke, with secondary treatment of its sanitary wastewater, the BOD_5 loading on the river increases fivefold from 2,700 kg (6,000 lb) during a dry-weather day to 14,000 kg (31,000 lb) during a 17-hour storm. The impact of these loadings on the receiving waters is discussed under environmental effects. If it were necessary for Roanoke to undertake advanced wastewater treatment of dry-weather flow, the relative significance of stormwater pollution would be even greater.

Bucyrus, Ohio – Overflows of the combined sewer system of Bucyrus, Ohio, contribute approximately 14,000 kg (30,000 lb) of phosphates (as PO_4) annually to the Sandusky River. By comparison, effluent from the city activated sludge plant contains 73,000 kg (160,000 lb) each year, and upstream rural runoff contributes 50,000 kg (110,000 lb) each year. Unless the city undertakes phosphorus removal of dry-weather flow, the phosphate from combined sewer overflows will not be especially significant on an annual basis. However, a requirement of 90 percent phosphorus removal would greatly increase the relative significance of the overflows. Under these circumstances, the rural runoff would become the most significant source of phosphates.

Tulsa, Oklahoma – In a recent EPA-sponsored study, the pollutant loadings from storm sewer discharges as compared to those from treatment plants were evaluated for Tulsa, Oklahoma, which is serviced by separate sewer systems. These loadings on an annual basis for BOD_5, COD, SS, organic (Kjeldahl) nitrogen, and soluble orthophosphate are summarized in Table 18. It is important to note the difference in pollutant loadings. For example, although the storm

Table 16. AVERAGE ANNUAL BOD_5 CONTRIBUTED TO THE ROANOKE RIVER BY MUNICIPAL SEWAGE [27] ROANOKE, VIRGINIA

Source of BOD_5	Sewage volume		BOD_5	
	mil gal.	% of total	lb	% of total
Treatment plant effluent	7,300	98.4	2,192,000	91.6
Treatment plant bypasses	45	0.6	90,000	3.8
Sanitary sewer overflows	79	1.0	111,000	4.6
Total	7,424	100.0	2,393,000	100.0

Note: mil gal. x 3.785 = Ml
lb x 0.454 = kg

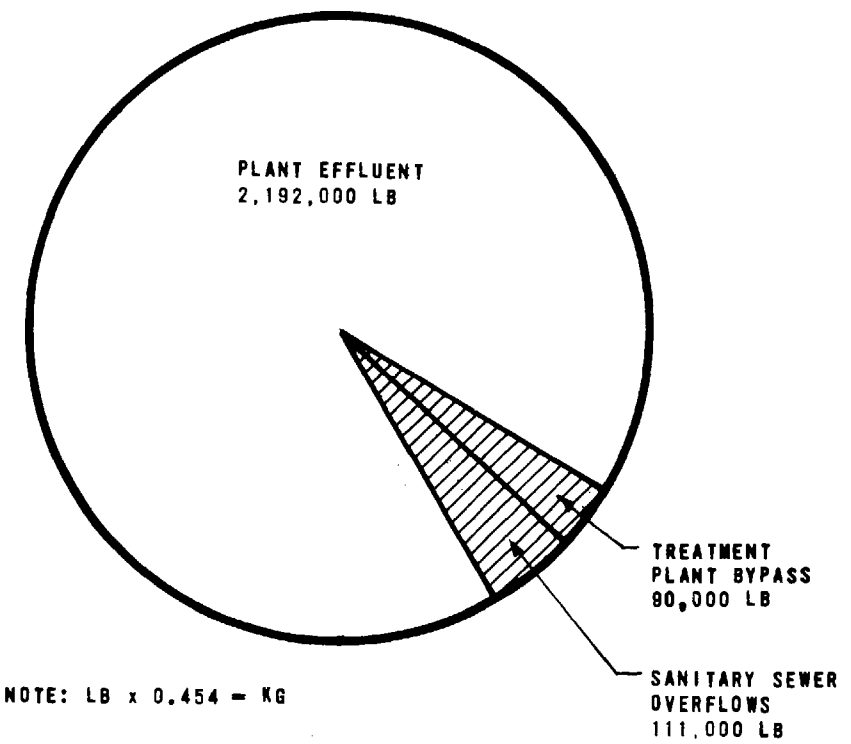

Figure 12. Average annual BOD_5 contributed to the Roanoke River by municipal sewage [27]

Table 17. BOD_5 CONTRIBUTED TO THE ROANOKE RIVER BY MUNICIPAL SEWAGE DURING MAXIMUM YEARLY RAINFALL EVENT [27] ROANOKE, VIRGINIA

Source of BOD_5	Sewage volume		BOD_5	
	mil gal.	% of total	lb	% of total
Treatment plant effluent	27.5	66.9	7,570	24.3
Treatment plant bypasses	7.4	18.0	14,810	47.5
Sanitary sewer overflows	6.2	15.1	8,790	28.2
Total	41.1	100.0	31,170	100.0

Note: mil gal. x 3.785 = Ml
lb x 0.454 = kg

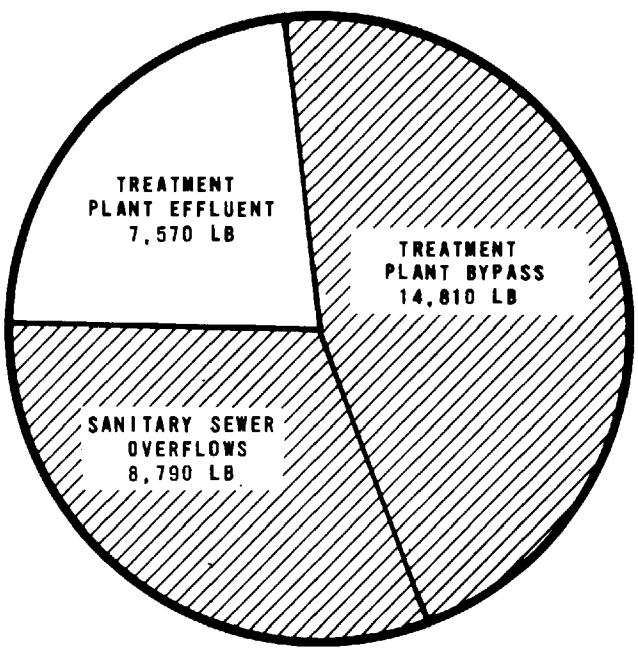

NOTE: LB x 0.454 = KG

Figure 13. BOD_5 contributed to the Roanoke River by municipal sewage during maximum yearly rainfall event [27]

Table 18. ESTIMATED ANNUAL LOAD OF POLLUTANTS ENTERING THE AREA RECEIVING STREAMS [33] TULSA, OKLAHOMA

Pollutant	Average annual storm sewer discharge pollution load, lb	Contribution of storm sewer discharges to total load, %	1968 Average annual load from treatment plant effluents,[a] lb
BOD_5	1,620,000	20	7,060,000
COD	11,200,000	31	24,400,000
SS	39,000,000	85	6,710,000
Organic (Kjeldahl) nitrogen	130,000	31	278,000
Soluble orthophosphate	171,000	4	4,180,000

a. One primary (21 mgd) and three secondary (19 mgd, total) plants.

Note: lb x 0.454 = kg
mgd x 0.0438 = cu m/sec

sewer discharges contribute only 20 percent of the annual BOD_5 to the area receiving streams, this source contributes 85 percent of the annual SS. Notice that the storm sewer discharge COD contribution is 31 percent as compared to the BOD_5 contribution of 20 percent. This indicates that the material in the storm sewer discharges will be more slowly oxidized than that in the treatment plant effluent.

In this section, the magnitudes of the contaminants found in urban stormwater have been considered. Before discussing corrective measures, it is also important to know something about the sources of the pollutants in stormwater and their movement. These topics are covered in the following subsection.

SOURCES AND MOVEMENT OF POLLUTANTS

Contaminant Sources

The various contaminants found in stormwater are derived from a number of different sources. Pollutants are adsorbed and absorbed from the air as rain- and snowfall over a city; from the surfaces of buildings, streets, vacant land, construction sites, parking lots, and yards in urban runoff; and in the sewer system. In the following discussion, the pickup of the contaminants will be traced from the initiation of precipitation until the stormwater runoff is discharged into receiving waters.

From the Air – The effects of urban air pollution on water pollution have received only limited study and attention. In American cities there is a wide variation in the extent and type of air pollution. Generally, the most significant urban air pollutants are oxides of sulfur and nitrogen, fine particulate matter (dust), carbon monoxide, and volatile hydrocarbons. During rainfall, sulfur oxides and nitrogen oxides dissolve in water droplets. Particulate matter will adhere to droplets and snowflakes. Portions of particulate matter will be dissolved in the droplets and melted snow.

Air pollutants picked up by precipitation in the atmosphere are usually less significant than the particulates that have settled to city surfaces and are washed away in urban runoff. These particulates, or dust, fall at annual rates of 170 to 320 metric tons/sq km (500 to 900 tons/sq mi) in most metropolitan areas [39]. That portion not removed in the sweeping of sidewalks and streets will run off during wet-weather and snow-melt periods.

In the absence of better information, it can be concluded that improvement of the air quality over an urban basin will benefit the water quality, but the magnitude of such benefit is, at present, difficult to estimate.

On City Surfaces – As precipitation runs off urban surfaces, it is exposed to contamination from a wide variety of sources. Dust and dirt, street litter, deicing chemicals, herbicides, dead leaves, pesticides, eroded materials, traffic residuals, and animal droppings are some of the more important substances that are carried away by stormwater as it passes through a metropolitan area.

In one of the earliest studies in the Storm and Combined Sewer Pollution Control Program, undertaken by the APWA, the sources of urban runoff pollution were analyzed

in detail. Street refuse or litter was defined in the study report as:

> ...the accumulation of materials found on the street, sidewalk, or along the curb and gutter which can be removed by [conventional] sweeping. All components of street litter contribute to water pollution, in the form of floating material, suspended or dissolved solids, and by bacterial contamination. The amount and composition of street litter varies widely. However, no systematic effort previously has been made to determine its rate of accumulation and composition over a period of time. The sources of street litter vary from community to community, from season to season, and from area to area of the same community. Street litter is the product of both human and natural actions. Litter (which is defined as waste scattered about--a clutter), includes remnants resulting from careless public and private waste collection operations; animal and bird fecal droppings; soil washed or eroded from land surfaces; construction debris; road surfacing materials ravelled by travel, impact, frost action or other causes; air pollution dustfall; wind-blown dirt from open areas; and a host of subsidiary materials. [39]

High concentrations of SS in combined sewer and storm sewer overflows have been traced, in some cases, to erosion at construction sites. Construction of streets, buildings, and utility services often exposes large areas of bare earth. When storm intensity exceeds the ability of the bare earth to absorb the precipitation, the runoff often carries away the more erodible material. Unpaved or poorly paved areas present a similar problem. In a 1948-1950 investigation of an area with cobblestone streets in Leningrad, USSR, 14,541 mg/l of SS were discovered in stormwater [26]. In a study in Tulsa, Oklahoma, for the EPA, a maximum average total solids concentration of 2,242 mg/l was found for storm runoff from one test area of the basin:

> The value for this site was eight to nine times greater than the average for the other test areas. This extremely high concentration can be explained by exposed open land. Shortly after the start of the project, construction began on a large apartment house complex. The land was

> stripped of its ground cover, cuts were made for streets, and water and sewer line trenches were dug. Construction continued throughout the project. Therefore, this test area is representative of a drainage basin that is under development. [33]

Chemicals are applied in metropolitan areas to encourage growth of certain plants and to discourage growth of others. They are also applied to minimize populations of rodents, certain insects, and birds. In northern portions of the country, deicing salts and abrasives are widely used in both urban and rural areas to make roads safer during the winter. Even when properly used, a large portion of these various chemicals will be washed off urban surfaces in stormwater.

The most common highway and sidewalk deicing compound used is sodium chloride. In addition, significant quantities of calcium chloride are spread in cities. Typical rates of spreading are 100 to 300 kg of salt per km (400 to 1,200 lb of salt per mile) of highway per application. Since this salt is nondegradable, it eventually runs off in water that will flow into streams or groundwater. In an EPA survey of the environmental impact of highway deicing it was concluded, in part:

> Road deicing salts are found in high concentrations in highway runoff. Large salt loads enter municipal sewage treatment plants and surface streams via combined and storm sewers, and direct runoff. Concentrations of chlorides as high as 25,000 milligrams per liter (mg/l) have been found in street drainage, and up to 2,700 mg/l in storm sewers. Surface streams along highways and those in urban areas have been found to contain up to 2,730 mg/l chlorides. Influence of highway salts upon major rivers in the U.S. at this time appears relatively minor...
>
> Materials storage sites are a frequent source of salt pollution to groundwaters and surface streams. Deicing salts are often stockpiled in open areas without suitable protection against inclement weather...Careful site selection and properly-designed materials storage facilities would serve to minimize incidents of water supply contamination and provide for better product handling and quality control...

> The special additives found in most road deicers cause considerable concern because of their severe latent toxic properties and other potential side effects. Significantly, little is known as to their fate and disposition, and effects upon the environment...[13]

The reduction of the contamination of urban runoff is discussed in Section VII under Source Control.

In the Sewer System – Additional contaminants may be introduced to storm and combined sewer overflows through openings to the sewer system. In many cases these contaminants find their way into the sewer system in violation of local ordinances. Street drains to storm or combined sewers are convenient receptacles of various wastes that are difficult to dispose of. Examples of these wastes are used automobile crankcase oil, dog droppings, leaves, and yard trimmings. Excess lawn watering carries fertilizers, herbicides, and pesticides along curbs to stormwater openings. In separate storm sewers these flows may either discharge untreated or collect until a storm washes them out. Rinse water from home car washing, which is high in grease, cleaning agents, and fine dirt, similarly enters storm drains.

In combined sewers and heavily infiltrated sanitary sewers, the most significant source of organic and bacterial contamination is usually the municipal sewage which is in the system by design. Turbulence of wastewater flows provides complete mixing of infiltration water, storm runoff, and municipal sewage. Grease and settled solids in the sewers (a problem magnified by the widespread use of garbage grinders), which would be treated if they reached the treatment plant during dry weather, often accumulate in low-flow reaches only to be flushed out by storm flow influxes, thus contributing to the wet-weather discharges.

Unless catch basins are cleaned between storms, a nearly impossible task, they may be a significant source of contamination of wet-weather flows. Although catch basins are intended primarily to trap grit and coarse debris during storms and/or to provide water seals to impound sewage odors, they may also trap significant amounts of leaves and other organic matter. This material, unless removed, decomposes over a period of time in the stagnant pools of water after a storm, only to be flushed out during a following storm. Thus, catch basins may contribute quantities of high BOD_5 wastes to the first flush of a storm (Table 19).

Table 19. FIELD TEST RESULTS OF CATCH BASIN SOURCE POLLUTANTS AND REMOVALS

Test location	BOD_5, mg/l		Chlorides, mg/l		SS, mg/l		TS, mg/l	VS, mg/l	MPN	Removals[a]
	Range	Avg	Range	Avg	Range	Avg	Avg	Avg	Avg	
Chicago, Ill. [27][b]										50% removal at 0.1 in. rain
Commercial area	35-225	126	--	--	--	--	--	--	--	80% removal at 0.2 in. rain
Residential area	50-85	67.5	--	--	--	--	--	--	--	94% removal at 0.3 in. rain
Washington, D.C. [26][c]	6-625	126	11-160	42	26-36,250	2,100	--	--	--	--
Detroit, Mich. [24][d]	--	234	--	--	--	--	660	299	930,000	2-1/2 hr after start of rain: 95% MPN removal 7.6% TS increase 24% VS increase 59% BOD_5 removal
San Francisco, Calif. [38]										
First sampling series[e]	5-1,500	241	--	--	--	--	--	--	--	--
Second sampling series[f]	15-420	156	--	--	--	--	--	--	--	--

a. Percentage of pre-storm basin contents flushed into collection system after various accumulations of rainfall or elapsed time.

b. APWA study of 7 catch basins.

c. Sampled from 11 catch basins.

d. Study on 1 catch basin.

e. COD, mg/l: range, 153-37,700; avg, 7,422. Total N, mg/l: range, 0.5-33.2; avg, 12.2. Total P, mg/l: <0.2. Sampled from 12 catch basins.

f. COD, mg/l: range 708-143,000; avg, 27,974. Total N, mg/l: range, 0.5-16.5; avg, 6.5. Total P, mg/l: <0.2. Sampled from 9 catch basins.

In overloaded separate sanitary sewer systems, it is not uncommon to find cross-connections between sanitary and storm sewers. Because an overloaded sanitary sewer may cause untreated municipal sewage to back up into basements or other low portions of buildings during periods of extreme peak flows, city personnel will often alleviate the problem with a stopgap solution by constructing an overflow from the sanitary sewer to a nearby storm sewer (or stream) which has excess capacity. Of course, such solutions "unseparate" the sewer system. If the treatment plant has sufficient capacity to treat the municipal flow, then the overflow from sanitary sewer to storm sewer increases the amount of untreated municipal sewage discharging to the receiving water.

Collection and Transport

Contaminants picked up by storm runoff pass through the sewer inlets (combined or storm sewers) and must then be transported to treatment plants or be discharged at overflow or bypass points. The fate of these pollutants depends on the design and condition of the sewer system. Infiltration may dilute combined flows; however, by causing an increase in the amount of overflow, this excess water, possibly uncontaminated before entering the sewer, aggravates the problem. For sanitary sewers, heavy infiltration may require overflows and/or bypasses. Infiltration in separate storm sewers may also be significant if treatment of these flows is eventually required.

Sources of Infiltration – During wet weather, when the upper layers of soil tend to become saturated with water, infiltration into conduits adds to the amount of wastewater that must be disposed of and reduces effective conduit capacities. Infiltration enters sewers through cracks and holes, joints, house connections, and manholes.

Cracks and holes are most likely to be found in older sewers, but sometimes faulty materials and construction methods result in defects in newly installed sewers. Uncoated steel and iron sewers may be attacked from the inside by wastewater acids and salts and from the outside by certain soils. Concrete pipe is often attacked by hydrogen sulfide gas which is produced by the anaerobic decomposition of the deposited solids found in wastewater. Differential settling or poor preparation of bedding often subjects sewers to loads greater than design loads. This can cause sewer cracking, and under extreme conditions, collapse. Small cracks and holes are often penetrated by tree roots that enlarge the opening and also obstruct flow in the sewer. A small crack may allow surrounding silt and sand to be carried into the sewer along with the infiltration. This removed silt can leave a cavity that may eventually undermine the sewer foundation and lead to a situation such as a street collapse as shown on Figure 14.

Some of the oldest sewers in the United States were constructed of brick or stone. These were rarely watertight even when they were new. Groundwater pressure might first force out some mortar and later a brick or two. Although these sewers are no longer being built, many continue to be in service because they are located in the most heavily built-up areas of cities where it is extremely expensive to replace them.

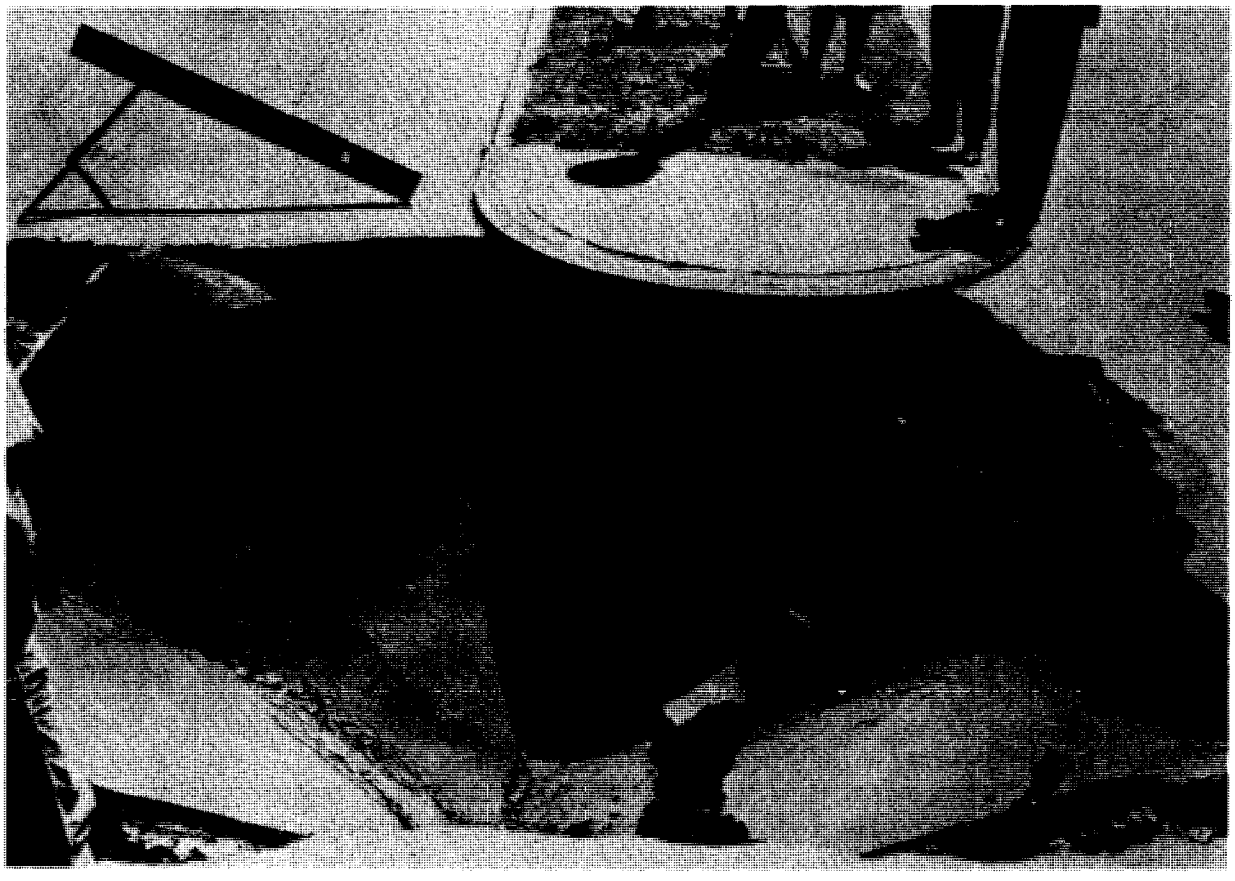

Figure 14. Street collapse due to infiltration [29]

Defective sewer joints are usually a more significant cause of infiltration than cracks or holes. In particular, older sewer joints (pre-1950s) were rigid, and effective gasket materials were not used. By not allowing for deflection, joints would often separate or break as the sewer settled. A slight break or deterioration in a gasket seal is an invitation for roots to enter. In many sewers, joints were not made properly during construction. Today's increasing need for treatment of wet-weather flows requires more care in the joining of sewers. This subject is discussed in greater detail in Section VIII.

Even if a local government ensures that joints are well constructed on sewers for which it is directly responsible, there is still the possibility of leaks on house connections. In some cities defective house connections have been determined to be the largest single source of infiltration. Many cities now require that the joint between the house

connection and the city sewer be made by, or under the supervision of, city personnel.

A survey in New Orleans, Louisiana, indicated that manholes contribute greatly to sewer infiltration [29]. Some of the major causes of infiltration observed included: (1) broken sewer pipe because of settlement of either the manhole or the pipe; (2) improper construction or deterioration of cement mortar linings or brick manholes; (3) cracks in the foundation, sidewalls, and castings; (4) improper seals at sewer connections; (5) improper construction methods when manholes are raised or lowered; (6) dislodging of castings from top of manhole by heavy equipment used for land clearing, filling, or leveling ground.

In areas with a high groundwater table, the greatest cost of infiltration may be in increased construction and operation expense for treatment plants. These cities often have high levels of infiltration even during dry weather.

Combined Sewer Systems — Although new combined sewer systems are infrequently designed in the United States, some cities presently served by combined sewers continue to add new combined sewers to existing systems. The practice of installing separate sewer systems has been institutionalized. For example, to obtain federal funding on urban redevelopment projects, combined sewers must be separated in the project area. In a survey of municipal sewerage facilities conducted by the APWA [27], it was found that 15,309 km (9,515 miles) of new separate sanitary sewers were constructed from 1957 to 1967. During the same period, only 1,926 km (1,197 miles) of new combined sewers were built. The surveyed communities contained 94 percent of the population served by combined sewers, but only 17 percent of the population served by separate sanitary sewers. Obviously then, the national ratio of new sanitary sewer miles to combined sewer miles must be considerably greater than 8 to 1.

One of the most important components of a combined sewer system is the interceptor sewer (or simply, the interceptor). Large combined sewer systems may have a network of interceptors. In the APWA survey, considerable variation was found in the capacity of interceptors. In terms of the ratio of peak flow to mean dry-weather flow, the capacity ranged from 1:1 to 8:1, with 4:1 median.

The greater the capacity of the interceptor, the smaller the *potential* amount of wastewater that will overflow at the trunk sewer-interceptor overflow point. The potential is emphasized because most combined sewer regulators

will begin to allow overflows before the flow reaches the capacity of the interceptor. In particular, regulators such as leaping weirs, side weirs, and other static devices, will rarely utilize the complete available interceptor capacity. Combined sewer systems with computer-controlled regulators to optimize interceptor utilization are described later in this text.

In many cities, excess wastewater treatment capacity is limited. Therefore, even if more of the combined flow is intercepted, it must be bypassed when it arrives at the treatment plant. Typically, in the design of treatment plants, capacity for treating 1.5 to 3.0 times the mean dry-weather flow is provided. This additional capacity is usually provided, not for wet-weather flows, but rather for the normal peaking of dry-weather flow during a 24-hour period.

Separate Sewer Systems — Most American cities built primarily during the twentieth century have separate sewer systems for sanitary wastewaters and storm runoff. Hence, cities like Los Angeles, Dallas, and Denver have separate systems, as compared with San Francisco, Chicago, and New York, which have combined systems. Other cities, like Washington, D. C., Atlanta, and Minneapolis, have hybrid systems with large areas sewered by combined sewers and more or less equal areas served by separate sewers. Some cities started out with combined sewers but later separated the sewer systems. In some cases, the existing sewers were used to convey municipal sewage, and new storm sewers were constructed. In other cases, the existing sewers became the storm sewers, and new sanitary sewers were built. Suburban areas with good natural drainage often have separate sanitary sewers and no storm sewers. For example, of the people served by separate sanitary sewers in the communities surveyed by APWA in 1967, only 60 percent were also served by separate storm sewers.

Of particular concern, in studying the possible collection and treatment of separate storm sewer discharges, is the fact that storm sewers are normally designed to take the most direct and economical route to the nearest waterway. Thus, as one travels outward from the urban activity core, the storm sewers become more and more fragmented and dispersed, and open channel flow in natural or "improved" creeks becomes more commonplace. This makes interception increasingly difficult and costly to a prohibitive degree. Environmental concern over the preservation of remaining natural creeks and streams largely precludes massive diversion of these flows for storage and treatment systems integrated with the municipal sewage flows.

ENVIRONMENTAL EFFECTS

In previous parts of this section, the quantities, qualities, and loadings of wet-weather overflows and bypasses have been discussed. Of real concern in any water quality study are the effects of any discharges, procedures, or physical operations on water bodies. In the case of storm sewer discharges and combined sewer overflows, the focus of concern is on their effects on receiving waters. The problem is to isolate the effects of wet-weather discharges and to compare these effects with the effects of other pollution sources. The question that needs to be answered is: What improvements (if any) in the receiving water will result from the reduction of wet-weather pollution?

Except for a few cases, real water quality benefits can be obtained through improved management of stormwater. The nature and magnitude of receiving water degradation associated with wet-weather discharges are brought out in the following two examples. Bucyrus, Ohio, has a combined sewer system, and Roanoke, Virginia, has a predominantly separate sewer system. Identification of the variations between wet-weather and dry-weather conditions forms the basis of evaluating the potential effectiveness of wet-weather controls and treatment.

Conversely, a very heavily polluted stream may actually be improved by the discharge of large amounts of relatively dilute storm or combined wastewater, if only temporarily. However, this is the exception; and in the future, as there are fewer chronically polluted rivers, it will become an increasingly rare exception.

Bucyrus, Ohio

Bucyrus, Ohio, is an incorporated city of 948 ha (2,340 acres) with a population of 13,000. The combined sewer system carries an average dry-weather flow of 0.1 cu m/sec (2.2 mgd). Secondary effluent and combined sewer overflows are discharged to the upper reaches of the Sandusky River, a tributary of Lake Erie. One of the aspects of Bucyrus, which made it particularly useful as a study area, is that there are no significant urban areas upstream. Hence, it is possible to study the degradation of Sandusky water quality as the river passes from above Bucyrus to several miles downstream, and to do so under varying weather and flow conditions. Furthermore, since rain usually falls on Bucyrus before it falls on the upstream basin, combined sewer overflows occur before river flow increases significantly. Under these conditions, scouring of benthal

deposits is not as likely to occur and possibly interfere with the determination of the effect of the overflows on the Sandusky River. In the 1968-1969 EPA-sponsored study of stormwater problems in Bucyrus, analyses were made of Sandusky River samples. The results are summarized in Table 20. From these samples, the investigators found the following:

Upstream of the Urban Area

The major differences in the upstream water quality characteristics during dry and wet weather are in the suspended solids, nitrates and bacteria counts. The average dry weather suspended solids of 32 mg/l increase to an average 465 mg/l during wet weather. The average dry weather concentration of nitrates is 7.2 mg/l as NO_3 and is increased to an average 21.7 mg/l during wet weather. This increase in nitrates seems to be due to agriculture runoff. The total coliform count is reduced from a dry weather average of 59,000 per 100 ml to 3,400 per 100 ml during wet weather. This reduction in bacteria is due to the added dilution water from the upper drainage area.

Through and Downstream of the Urban Area

The comparison between the dry and wet weather river samples indicates that the waste loads from the overflow affect the river quality as far downstream as the fifth bridge, which is approximately seven miles downstream from the wastewater treatment plant. During periods of overflows the average BOD concentration at the first bridge downstream from the wastewater treatment plant is increased from a dry weather average of 6 mg/l to 14 mg/l, the suspended solids increase from 49 mg/l to 192 mg/l, and the total coliforms increase from a dry weather average of 400,000 per 100 milliliters to 4.5 million per 100 milliliters. The average coliform count at the fifth bridge downstream from the wastewater treatment plant is increased from an average 4,500 per 100 milliliters to 86,000 per 100 milliliters. [35] (Emphasis added)

Table 20. SUMMARY OF DRY- AND WET-WEATHER SANDUSKY RIVER ANALYSES BUCYRUS, OHIO

Location	BOD_5, mg/l		SS, mg/l		Total coliforms /100 ml	
	Dry weather	Wet weather	Dry weather	Wet weather	Dry weather	Wet weather
1. Sandusky River - upstream						
Number of analyses	33	22	20	13	3	4
Average	4	5	32	465	59,000	3,400
Range	1-14	2-13	5-160	20-1,960	23,000-95,000	1,200-6,300
2. Sandusky River - downstream 1st bridge downstream from wastewater treatment plant						
Number of analyses	27	43	14	38	8	11
Average	6	14	49	192	0.4×10^6	4.5×10^6
Range	2-12	4-51	8-190	5-960	2×10^3-1.5×10^6	0.05×10^6-8.8×10^6
3. Sandusky River - downstream 2nd bridge from wastewater treatment plant						
Number of analyses	9	8	8	8		
Average	7	5	44	62		
Range	3-22	3-8	10-195	20-135		
4. Sandusky River - downstream 3rd bridge from wastewater treatment plant						
Number of analyses	12	17	4	17	5	1
Average	4	6	36	36	15,000	130,000
Range	1-8	3-10	27-45	20-50	5,600-40,000	--
5. Sandusky River - downstream 5th bridge from wastewater treatment plant						
Number of analyses	13	19	5	11	4	1
Average	5	6	18	90	4,500	86,000
Range	2-13	2-12	15-25	25-300	3,000-5,300	--

In the case of Bucyrus, the detrimental effects of combined sewer overflows are significant enough that it is not necessary to even make a water quality analysis to realize that a problem exists:

> The overflow wastes have several effects on the river. The most obvious one is the debris and organic solids which settle in the river in and below the city. These create odors and unsightly conditions long after the overflow is past.
>
> The results of the aquatic biology survey corroborates the results of the water quality studies of this report. The river upstream from Bucyrus has a relatively undisturbed fauna of the types normally found in unpolluted waters. The river inside the City of Bucyrus shows indication of gross pollution and has sections completely devoid of life. The river downstream from Bucyrus, during periods of low flow, is biotically dead for six to eight miles below the wastewater treatment plant. [35]

Roanoke, Virginia

The city of Roanoke, Virginia, covers 6,786 ha (16,756 acres) of valley land between the Blue Ridge and Allegheny mountains. The city population of 93,000 and the surrounding suburban population are served by separate sanitary and storm sewer systems, except for a very small combined service area downtown. The municipal sewage is treated by a 1-cu m/sec (22-mgd) activated sludge plant. The Roanoke River and several tributaries receive storm sewer discharges and infiltrated municipal sewage overflows, in addition to the treatment plant effluent.

In a 1965 study of the sanitary sewer system, it was concluded that overflows "...were resulting in unsightly and undesirable pollution of the watercourses in the City" [12]. Since a major regional recreation area, Smith Mountain Lake, is located 16 km (10 miles) downstream, degradation of the Roanoke River was of special concern. The impact of wet-weather flows on the Roanoke River was quantified in a 1968-1969 investigation sponsored by the EPA. The results of a stream sampling program which determined the concentrations of various pollutants during both wet and dry weather are reported in Table 21. Murray Run, Trout Run, and 24th Street are three Roanoke tributaries with average dry-weather flows of 176, 42, and 31 l/sec (6.2, 1.5, and 1.1 cfs), respectively. As shown, all three

Table 21. RELATIVE CONCENTRATIONS OF POLLUTANTS DURING AVERAGE DRY- AND AVERAGE WET-WEATHER CONDITIONS ROANOKE, VIRGINIA

Stream	BOD_5, mg/l		TS, mg/l		TVS, mg/l		SS, mg/l	
	Dry weather	Wet weather	Dry weather	Wet weather	Dry weather	Wet weather	Dry weather	Wet weather
Murray Run	8	17	248	623	85	134	37	89
Trout Run	3	18	281	460	147	139	17	93
24th Street	8	20	194	514	126	172	20	103

Stream	VSS, mg/l		Settleable solids, ml/l		Flow, mgd	
	Dry weather	Wet weather	Dry weather	Wet weather	Dry weather	Wet weather
Murray Run	12	25	0	2	4.0	7.7
Trout Run	8	28	0	3	1.0	13.8
24th Street	7	24	0	3	0.7	3.4

streams suffer a considerable degradation in water quality during wet weather. SS and BOD_5 increase by several times in each stream.

It is not possible to describe in two examples all of the adverse environmental effects of storm sewer discharges and combined sewer overflows. However, by considering the significance of the stormwater problem in two smaller cities, it is not difficult to imagine the impact of wet-weather discharges from large cities on receiving waters. In fact, following a detailed examination of ten combined sewer overflow systems surrounding Upper New York Bay and the lower reaches of the Hudson and East rivers, it was concluded:

> ...In view of the tremendous quantities of pollutants bypassed during the rainfall from this combined sewer system, it does not seem reasonable to debate whether secondary treatment plants should be designed for 80, 85, or 90% BOD

> or suspended solids removal when in fact the small increments gained in this range are completely overshadowed by the bypassing occurring at regulators during wet weather flow.
>
> ...The necessary improvement in the quality of receiving waters and the reopening of beaches will not be accomplished by the multi-billion dollar treatment plant upgrading and expansion program now going on within the District, and the monies spent for this construction in large part will be wasted if means of mitigating the effects of combined sewers are not found. [8]

Beneficial Aspects of Wet-Weather Discharges

Discharges of wet-weather flows--particularly separate storm sewer and/or treated discharges--to extremely foul streams may have some beneficial effects on the receiving waters. As noted earlier in presenting wastewater characteristics, the DO of storm flows is generally high, and the organic content--in all but the initial runoff stages--is relatively low. Just as runoff tends to clean the air and land areas, the temporary high flows may tend to flush pollutants from creeks and normally stagnant backwater areas into river zones of greater assimilative and recovery capacity. Storm flows also provide a viable and major source of groundwater replenishment not only by direct percolation in pervious areas, but also by continuous releases through natural stream beds and ponds. Finally, there is the plant and wildlife subsisting in the flood plain environment which must be considered in evaluating management alternatives.

As introductory information to alternative control and treatment methods, a discussion of the development of process and system evaluation criteria is presented in the next section.

Section VI

EVALUATION PROCEDURES AND CRITERIA

The ability to collect and/or evaluate data effectively and to assess process and equipment applicability to stormwater problems is essential to program development. It is intended that this section provide a transition from an awareness of the problem described in Section V to the critical evaluation of basic alternatives and technology presented in Part III. A brief introduction to sampling, parameters to consider, measurement, and data analysis is presented, followed by a discussion of considerations pertinent to process and equipment evaluation. The link between data and equipment operation and control systems is also introduced. Finally, the handling of cost data estimates for facilities is discussed.

DATA COLLECTION

Data collection is primarily concerned with the determination of the volume/flow rate and characteristics of the wastewater and receiving waters before, during, and after storm events. Locations of interest include points of overflow (potential or real) or diversion, in-system sites upstream and downstream of treatment facilities, and monitoring stations within the receiving waters. Logically, the data are intended to identify the nature of the problem and the effectiveness of the solution(s). Data analysis involves the interpretation of the results and is discussed later in this section. The goal of the analysis is to weigh the credibility and significance of the data and to provide feedback for guidance in improving the collection program. To be of general value, analytical work must follow standardized procedures (NPDES Guides recommended), and the means of sample collection, storage, and examination must be identified clearly.

Sampling

A comprehensive state-of-the-art study for EPA on wastewater flow sampling [12] has recently been completed. The study has provided much of the basis for this summary, and the reader is referred to it for more detailed information.

Two comments from the study are believed particularly enlightening in placing stormwater applications in proper perspective:

> Because of the variability in the character of storm and/or combined sewage, and because of the many physical difficulties in collecting samples to characterize the sewage, precise characterization is not practicable, nor is it possible. In recognition of this fact, one must guard against embarking on an excessively detailed sampling program, thus increasing costs, both for sampling and for analyzing the samples, beyond costs that can be considered sufficient for conducting a program which is adequate for the intended purpose.
>
> . . . . . .
>
> Sampling programs should start long before installation of combined sewer overflow and stormwater treatment/control facilities to establish the objectives of the facilities and to provide necessary design and operation criteria. A much longer time period for sampling may be required than anticipated because of the need to sample during periods of storm runoff, which may be few in drought years. [12]

Thus the scope and timing of sampling programs must be considered concurrently with the selection of site locations and sampling devices.

Programs – Sampling programs are established for a variety of purposes--primarily, problem identification, process and equipment evaluations, and waste stream and receiving water monitoring. The more common pollutants analyzed are BOD_5, COD, chloride, nutrients (nitrogen and phosphorus derivatives), pH, total solids, suspended solids, volatile solids, oil and grease, and coliform groups. If industrial wastes are included and/or occasionally for urban runoff, additional analyses for such pollutants as cyanide, fluoride, heavy metals, pesticides, sulfate, and sulfide may be needed.

Requirements for intensive continuous monitoring by various enforcing agencies appear to be imminent; thus, sampling is becoming an increasingly larger part of pollution control.

Most important to any sampling program are (1) determination and definition of purpose, (2) program timing, (3) identification of specific data requirements, and (4) evaluation of the costs involved with respect to the quantity and quality of data required. A careful study of costs, distinguishing between sample collection, subsequent analyses, and reporting, should be made prior to commencing a program. For example, where collection costs are high (because of location or necessary coincidence with a particular event) or where objectives are selectively stringent, additional analyses may be justified.

If the number of samples is large and the program is to continue over a long period, consideration should be given to the use of automatic analyzing equipment. Caution is needed, however, in its selection. With some equipment, the time required for making necessary adjustments between each of a series of tests may counteract the rapidity of making single parameter analyses.

The use of mathematical statistical analysis for determining the probable errors in the data obtained by sewer sampling is usually not practicable. For example, a single grab sample of 1 liter, even in dry-weather flows, may not be representative of the average character of the flow. The grab sample is representative of only an instant in time and, if the sewage is not thoroughly mixed in the pipe, of one point in the cross-section of the flow. During storm flows, sewage characteristics change rapidly, making a grab sample even less representative. Thus, a large number of samples taken over short time intervals is required to characterize the sewage in a combined sewer adequately. Compositing the samples in proportion to flow rate may yield the average character of the sewage during that period of compositing, but it does not describe the pattern of changes occurring during that period.

As each program progresses, it may be possible to reduce the number of samples collected or analyses performed on the basis of a periodic review of the data obtained.

Site Selection — The adequacy of a sampling program depends largely on the optimum selection of sampling sites. To

ensure that the samples are representative, the following general guides are recommended:

> In sewers and in deep, narrow channels, samples should be taken from a point one-third the water depth from the bottom. The collection point in wide channels should be rotated across the channel. The velocity of flow at the sample point should, at all times, be sufficient to prevent deposition of solids. When collecting samples, care should be taken to avoid creating excessive turbulence which may liberate dissolved gases and yield an unrepresentative sample. [19]

Additional considerations are as follows: (1) the site should provide maximum accessibility and safety; (2) it should be a sufficient distance downstream from the nearest tributary inlet to ensure complete mixing of the two flows; and (3) there should be a straight length of pipe at least 6 sewer diameters upstream of the site. If the cross-section of the sewage flow is homogeneous with respect to the constituents being sampled, then a single point of sample extraction will be adequate. If there is a spatial variation in the concentration of the particular constituent, as is more often the case, then the sampler intake must be designed to gather a sample that is--as nearly as possible--representative of the actual flow.

Awareness of the general character of sewer flows and flow modes in storm and combined sewers and knowledge of the variability of pollutant concentration leads to an understanding of how best to select sampling sites.

Equipment — Samplers presently available operate on mechanical (e.g., dipper), suction lift (pump above flow level), forced flow (submersed pump), or fluidic (differential pressure actuated) principles. Typical sampling units and installations are shown on Figure 15.

In addition to gathering a representative sample, the sampling equipment must also be capable of transporting the sample, without precontamination or cross-contamination from earlier samples or aliquots, and suitably storing the gathered sample. Chemical preservation is required for certain parameters that may be subject to later analyses, but refrigeration of the sample is also required and is considered to be among the best means of preservation. Special precautions and analysis techniques may be necessary, however, to prevent data distortion of certain parameters obtained from refrigerated samples [1].

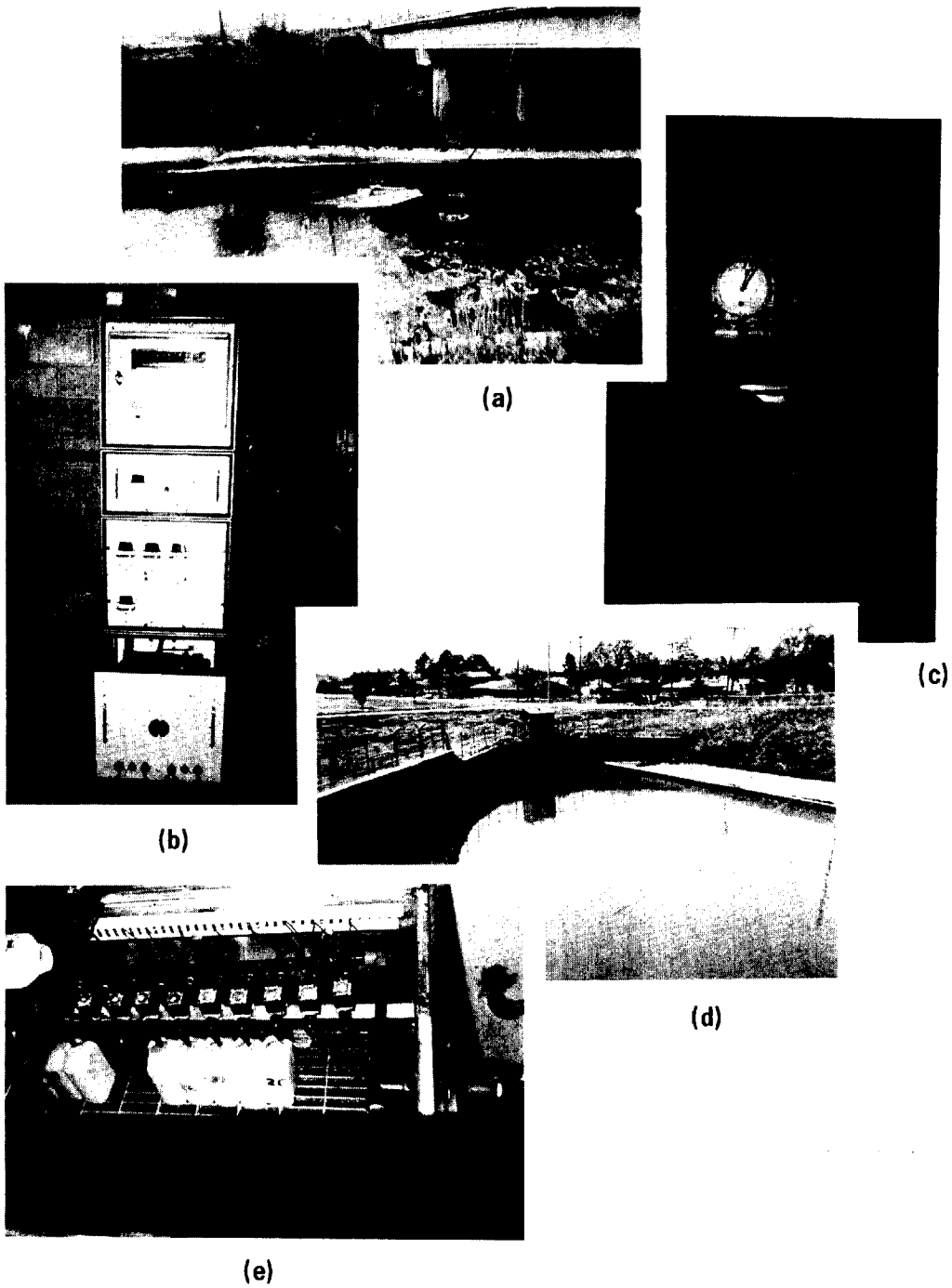

Figure 15. Typical sampling units and installations

(a) River sampler supporting a 1.3 l/sec (20 gpm) submersible pump (b) Sample receiver, direct analyzer, and signal transmitter (c) Discrete sewage sampler, time-and level-paced, with refrigerator (d) Sampling station at stormwater pumping station forebay (e) Associated discrete sampler, solenoid operated

The design should be such that maintenance and troubleshooting of the unit are relatively simple tasks. The unit should have maximum inherent reliability. As a general rule, complexity in design should be avoided, even at the sacrifice of a certain degree of flexibility of operation.

Factors that should be considered in the selection of a sampler include the following:

- Range of wastewater conditions.
- Rate and frequency of change of wastewater conditions.
- Periodicity or randomness of change of wastewater conditions.
- Availability of recorded flow data.
- Need for determining instantaneous conditions, average conditions, or both.
- Volume of sample required.
- Need for sample preservation.
- Estimated size of suspended matter.
- Need for automatic controls for starting and stopping.
- Need for mobility or for a permanent installation.

Although it would be impossible for a single piece of equipment to be ideal for all sampling programs in all storm and combined sewer flows, samplers presently available offer a variety of features and some general requirements can be delineated. A sampler should be capable of (1) collecting a representative sample of sufficient size for the necessary analyses; (2) operating in the mode required (either automatic or manual); (3) collecting either discrete or composite samples; (4) unattended operation while remaining in a standby condition for extended periods of time; and (5) operating under a variety of hostile environmental conditions and sewer flow ranges.

Assessments of the state-of-the-art study [12] on sampler equipment included the following:

Intake design – For representative sampling, the preferred orientation of the intake is into the sewage flow (facing

upstream). Further, the intake velocity should equal or exceed the velocity of the stream and the geometry of the intake has little effect. "In the absence of some consideration arising from the particular installation site, a regular distribution of sampling intakes across the flow, each operating at the same velocity, would appear to suffice. Since the intakes should be as non-invasive as possible in order to minimize the obstruction to the flow and hence the possibility of sewer line blockage, it seems desirable to locate them around the periphery of the conduit."

Collection method – "...the suction lift gathering method appears to offer more advantages and flexibility than either of the others. The limitation on sample lift can be overcome by designing the pumping portion of the unit so that it can be separated from the rest of the sampler and thus positioned not more than 30 feet [9.2 meters] above the flow to be sampled. For the majority of sites, however, even this will not be necessary." The first flow of any suction lift sampler should be considered nonrepresentative and returned to waste.

Sample transport – The sampler conduit size must be large enough to be free of plugging or clogging but small enough to ensure velocities high enough to prevent settling of the SS. Thus, the sample flow rate and line size are interdependent and must be approached together from a design consideration. The minimum line size should be 10- to 12-mm (3/8- to 1/2-inch) inside diameter and the minimum velocities should not drop below 0.6 to 0.9 m/sec (2 to 3 fps).

Sample container – The sample capacity will depend upon the subsequent analyses to which the sample is to be subjected and the volumetric requirements for these analyses. As a minimum, it is recommended that at least 1 pint and preferably 1 liter of fluid be collected for any discrete sample. For composite samples at least 1 gallon, and preferably 2, should be collected. The container itself should be either easy to clean or disposable.

Controls and power – It is desirable that the equipment start automatically upon signal from an external device indicating the onset of a storm.

One of the most attractive techniques for automatically starting stormwater samplers is through flow depth sensing. A remote power source with automatic changeover to battery operation on power outage is recommended. The controls for an automatic sampler should allow some degree of freedom in the operation and utilization of the equipment. A built-in

timer is desirable to allow preprogrammed operation of the equipment. Such operation is particularly useful, for example, in characterizing the pollutant concentration increase in the early stages of storm runoff. However, the equipment should also be capable of flow proportional operation.

Representative sampler types, features, and costs are listed in Table 22. Manufacturers' quoted 1972 equipment costs ranged from $275 to $5,606 [12], depending upon the degree of sophistication of the equipment with respect to (1) the number of samples collected, (2) mode of operation, (3) type of sample collected, (4) weatherproofing, (5) refrigeration, etc.

Case Histories – Several municipalities have installed large scale systems utilizing automatic samplers for identifying the performance of stormwater overflow control or abatement systems. Two are described below as representative examples.

METRO (the Municipality of Metropolitan Seattle) has conducted a comprehensive water quality sampling program throughout its entire metropolitan drainage area since 1963 [16]. At the inception of its computerized control demonstration grant from the EPA in 1967, additional specialized water quality monitoring studies were added to the existing program to concentrate on certain areas within the collection system that contributed to combined sewer overflows. Six compositing and seven 24-bottle discrete samplers (each sequentially programmed, refrigerated, automatic [Sirco Controls Co., Model B/ST-VS]) were designed and built as part of the demonstration grant. They are installed at widely separated overflow stations in the project, and each operates whenever the adjacent outfall gate is in the open position. The suction lift samplers draw overflow samples up as much as 5.2 meters (17 feet) to a bottle of at least 1-liter volume. Samples are then refrigerated until they are collected for analysis. Within each sampler, a section containing programmers, timers, and other control devices rests above the refrigerated section. The control enclosure is heated and contains air circulation fans to reduce interior corrosion from condensation.

According to METRO, the term "automatic" is somewhat deceiving since considerable manual effort is involved in collecting samples, replacing bottles, and testing and repairing the various electrical components. Following an initial 6-month break-in period, the performance record of the units has been satisfactory.

In summary, METRO found that most sampler malfunctions were simple to correct; rarely has the manufacturer been called

Table 22. REPRESENTATIVE COMMERCIALLY AVAILABLE SAMPLERS[a]

Manufacturer	Model designation or No.	Type	Power	Maximum sample lift, ft	Submersible	Operate under freezing conditions	Portable	Automatic start-up	Timer	Available options: Refrigeration	Available options: Explosion proofing	Available options: Winterizing kit	Price $
N-Con Systems Co., Inc.	Surveyor	Com./[b] Seq.	Batt./Ext.[c]	6	N[d]	N	Y	N	Y	N		N	275
N-Con Systems Co., Inc.	Scout	Com./ Seq.	Batt.	15	N	N	N	N	Y	N		N	450
N-Con Systems Co., Inc.	Sentry	Com./ Seq.	Batt./Ext.	15	N	N	N	N	Y	N		N	895
N-Con Systems Co., Inc.	Trebler	Com./ Seq.	Ext.	~0	N	N	N	N	Y	Y		N	995-1,560
Protech, Inc.	CG-125	Com./ Seq.	Refrigerant or compressed gas	32	N	Y	Y	N	Y	N	Y	Y	583-793
Protech, Inc.	CG-125S	Com./ Seq.	Batt./Ext.	32	N	Y	N	N	Y	Y	Y	Y	1,650-2,310
Protech, Inc.	CG-125FP	Com./ Seq.	Refrigerant or compressed gas or Batt./ Ext.	32	N	Y	Y	N	Y	N	Y	Y	693-1,108
Protech, Inc.	CG-150	Com./ Seq.	Refrigerant or compressed gas or Batt./ Ext.	32	N	Y	Y	Y	Y	Y	Y	Y	895-2,510
Protech, Inc.	CEL-300	Com./ Seq.	Ext.	32	N	Y	Y	N	Y	Y	Y	Y	1,450-2,910
Protech, Inc.	DEL-240S	Com./ Seq.	Ext.	32	N	Y	N	Y	Y	Y	Y	Y	5,606
Sigmamotor, Inc.	WA-1	Com./ Seq.	Batt./Ext.	22	N	N	Y	N	Y	N		N	400-700
Sigmamotor, Inc.	WDPP-2	Com./ Seq.	Batt./Ext.	22	N	N	Y	N	N	N		N	680-770
Sigmamotor, Inc.	WM-1-24	Com./ Seq.	Batt./Ext.	22	N	N	Y	N	Y	Y		N	1,050-1,525
Sirco Controls Co.	B/ST-VS	Com./ Seq.	Batt./Ext.	22	N	Y	N	N	Y	Y		Y	1,760-2,950
Sirco Controls Co.	B/HE-VS	Com./ Seq.	Batt./Ext.	200	N	Y	N	N	Y	Y		Y	1,380-2,850
Sirco Controls Co.	B/DP-VS	Com./ Seq.	Batt./Ext.	N/A[e]	N	Y	N	N	Y	Y		Y	1,550-2,640
Sirco Controls Co.	PII-A	Com./ Seq.	Batt.	18	N	N	Y	N	Y	N		N	1,387-1,832
Sonford Products Corp.	HG-4	Com./ Seq.	Batt./Ext.	~0	N	N	Y	N	Y	N		N	325-495
Sonford Products Corp.	NW-3	Com./ Seq.	Spring driver clock	8	N	N	Y	Y	Y	N		N	920
Sonford Products Corp.	TC-2	Com./ Seq.	Ext.	N/A	N	N	N	N	Y	Y		N	2,495

a. Data from [12]. Listing does not constitute endorsement or recommendation for use.

b. Com. = composite; Seq. = sequential.

c. Batt. = battery; Ext. = external.

d. N = No; Y = Yes.

e. N/A = Not applicable.

in to make major repairs. As a rule, a properly maintained sampler, no matter how simple or complex, will work well and will sample each overflow according to design specifications.

DMWD (the Detroit Metropolitan Water Department) has also used automatic samplers. Their experience was similar to METRO's, but DMWD was disappointed with the results of their program [25]. DMWD used an automatic sampler to collect samples every 1/2 hour. The sampling pump, located inside the manhole, was limited to 5.5 meters (18 feet) of suction lift. Debris in the combined sewer wrapped around the sampling head and caused blockages. The plugging problem was considerably improved but not eliminated after several months.

Another problem arose during a study of the variation of pollutional load in the combined sewer during storm events. Although variations in SS concentrations are to be expected, the wide variations (ranging from 0 to 1,000 mg/l) occurring at random time periods indicated that the samples were not representative. The low pumping rates necessitated by a 24-hour sampling period resulted in accumulation of solids in the sample line. These were then released into the sample bottle as a "slug." Daily flushing and cleaning of sample lines did not solve this problem.

DMWD suggests several modifications for improving the automatic sampler's performance: (1) the sample line should have a minimum inside diameter of 38 mm (1-1/2 inches); (2) the pumps should have a minimum capacity of 1.6 l/sec (25 gpm); (3) a primary grinder should be installed on the sampler line; and (4) a flow-through system with a take-off for the sampling device should be used. For sampling combined sewer overflows, the system should be equipped with the necessary sensors to detect overflows and to start and stop the pumps. On-site power for the pump and comminutor is required. Although this system would have limitations as to location, it is believed that a large flow must be maintained if truly representative samples are to be obtained. With a flow-through system, the sampler could be located away from the manhole and protected from damage.

Flow Measurement

Accurate flow measurement is a basic requirement in wastewater system design and operation. Methods used are classified as either direct discharge or velocity-area types [19]. Direct discharge methods (typically a control section with a differential head measurement) used in conventional,

dry-weather facilities are generally simple, proven, and well documented. The devices used include weirs, flumes, venturi and magnetic flow meters, and flow tubes, all with their associated sensing and recording appurtenances. Most devices induce headlosses to the flow stream, generally in proportion to the accuracy required, and in the case of the cited meters and tubes, require full section flow (no free water surface and minimum entrained gases).

Because of the volumes and consequent costs involved and the extreme flow variability encountered, stormwater flows are generally measured by the velocity-area method (typically a measured depth coupled with a "normal" flow velocity assumption or measurement). Thus, instruments/operators will couple depth probes (using floats and scows, bubbler tubes, sonic or electrical devices, etc.) and known cross-sectional geometry with velocity measurements (using tracers, current meters, etc.) or approximating computations (using conduit slopes and Manning's formula, gate losses, etc.). Note that simple depth measurements are highly susceptible to errors due to nonuniform and unsteady flow conditions.

Typical requirements for an effective stormwater conduit gage, taken from a recent prototype design contract [21], are as follows:

Necessary

1. It must be capable of functioning under all conditions of flow, from partially full, open channel type flow to full flow under varying surcharge pressures.

2. Interference with pipeline hydraulics must be kept at a minimum.

3. It must neither influence nor be influenced by any contaminants in the liquid.

4. It must operate with satisfactory accuracy under all flow conditions.

5. The number of moving parts must be kept at a minimum for easy maintenance.

6. It must be capable of being instrumented for remote readout.

7. It must be resistant to theft and vandalism.

Desirable

1. It should be applicable to a wide range of conduit sizes.

2. It should be rapidly installed through a standard manhole or in other locations where the sewer is accessible.

3. It should be readily installed in existing pipes.

4. Its power requirements should be kept at a minimum.

5. Its cost should be reasonable.

Devices closely approaching these ideals have yet to be developed. Objects in the flow, grease buildup, corrosion, and flow variability are the major difficulties encountered. Once a device is installed, maintenance and recalibration must be carefully attended to.

Typical Devices – The following is a brief summary of representative wastewater measuring devices taken from Schontzler [22] and Metcalf & Eddy, Inc. [19].

Floats and scows – Floats are used to measure the change of wastewater level in a small stilling well at the side of a channel, as opposed to scows which are anchored in the middle of the stream. The major problem encountered with the float is that the stilling well tends to become clogged and silted, requiring constant cleaning. On the other hand, a scow, riding in midstream, becomes a depository for all floating debris, rags, paper, etc., carried by the wastewater flow. This accumulation tends to submerge the scow and causes erroneous readings. Constant care and cleaning are required. A representative cost of a simple float and drum chart recorder would be under $500.

Gas bubblers – Gas bubbler devices, adapted from measuring heights in tanks of liquid, involve immersion of a dip tube [e.g., 6 mm (1/4-inch) diameter pipe] to a point near the base of the flowing liquid. Air, or other gas, is injected through the tube, and the resultant back pressure, which is measured, is a direct function of liquid level, provided that the liquid density is constant. One problem is the tendency to collect crystallized solids inside the lower end of the tube, reducing the diameter and resulting in a false reading. A constant water purge may alleviate the problem. Other problems include hangups of floating debris and changes due to the aspirating effect of the flowing water.

The latter induces errors as the flow rate varies from the calibration rate. The system requires an accurately regulated gas source, either a pressurized gas container or compressor, to develop the reference back pressure. A single installation, running on bottled nitrogen gas with recorder and regulator, might cost on the order of $750, exclusive of a control device (e.g., Palmer-Bowlus flume) [7].

Surface-seeking probe — This new device has a thin, needle-like probe which constantly positions itself at, or slightly above, the surface of the liquid. The probe is lowered by a precision motor until the tip just makes contact with the surface of the water. Controlled by an electronic circuit, it then retracts slightly, and lowers again checking the new level of the water. Cycles are repeated continuously in this manner. The signal transmitting unit may be mounted up to 7.6 meters (25 feet) above the water surface. The approximate cost of a probe and recording computer is $2,000 (plus installation). Records of direct operations on stormwater are not presently available [22].

Magnetic flowmeter — In this device, an electromagnetic field is generated by placing electric coils around the pipe using the flowing liquid as a conductor. The induced voltage, measured by electrodes placed on either side of the pipe, is proportional to the flow velocity. The pipe must be flowing full. Because grease buildups interfere with accurate readings, the electrodes generally are removable for cleaning. High capital costs (e.g., the factory cost for a 125-cm (48-inch) diameter unit with indicator recorder is on the order of $20,000 to $25,000) usually limit applications to small pipe sizes.

Ultrasonic and sonic devices — Ultrasonic measurement, a development from World War II sonar work, has the advantage of avoiding direct contact between the device and the liquid. The best applications appear to be larger installations where experienced technicians are available to maintain calibration and perform repairs. Typically, both fluid depth and velocity measurements are made. In measuring depths, for good accuracy and to avoid extraneous signals bouncing off the walls of the channel, the sonic transducer should be as close as practicable to the surface of the liquid.

A demonstration project using this type of equipment for stormwater flow measurement is underway in Milwaukee [28, 14]. Velocities along several horizontal planes within each of two prototype conduits (one 1.5-meter [5-foot] diameter, the other 3.8-meter [12-1/2-foot)] are computed and

averaged utilizing ultrasonic transducers placed at various elevations within the conduits. The flow depth is measured by a separate sonic transducer mounted above the liquid level in a manhole. The installation in the smaller conduit is performing satisfactorily; however, readings from the larger are erratic probably because of high air entrainment (a deep drop manhole is located just upstream of the meter site). The small air bubbles increase the attenuation of sonic energy by orders of magnitude and eliminate operation [15].

The basic depth/velocity unit, manufactured in Japan, reportedly costs on the order of $10,000 to $15,000. The unit has a continuous readout display capability.

Electrical devices – Electrical devices involve the use of equipment such as conductivity cells, capacitors, hot-wire anemometers, and warm-film anemometers. To date this equipment has been found, for the most part, unsuited for sewage flow measurements because of interferences from floating and suspended material and lack of uniformity of the medium being tested.

Applications – Typical applications of flow measurement in stormwater management systems are listed in Table 23. Many installations are limited to only stage monitoring and the most commonly used devices are of the gas bubbler type. Flow measurement practice at treatment facilities, as expected, reflects the conventional alternatives of flumes, flow tubes, and magnetic flowmeters with occasional attempts at innovation.

Recent research and development attempts to devise new units have been only partially successful. For example, in one study on the application of thermal techniques [8], it was found that: (1) utilization of flush-mounted hot-wire or warm-film anemometers in a direct-reading mode was not feasible because of shifts in calibration resulting from contamination buildup and lack of equipment ruggedness and reliability; and (2) the technique of measuring time-of-flight thermal pulses lacked adequate precision. In a second study [21], capacitor plates were used to sense the change in liquid level in the sewer pipe and heat pulse timing for velocity measurement. The overall accuracy of the final prototypes, which had 20- and 61-cm (8- and 24-inch diameters, was reported as ±15 percent at best. Scum deposits on the walls of the gage and the nonrepresentativeness of point velocities at the boundary were noted as significantly and adversely affecting the accuracy of velocity readings.

Table 23. TYPICAL FLOW MEASUREMENT APPLICATIONS

Location	Type of device	Design maximum flow, cfs	Make and model no.	Remarks
Boston, Mass., Cottage Farm Stormwater Treatment Station	Flow tube (Dall)	135	BIF model 121 Dall	Located on pump discharge lines (4 units).
Dallas, Tex., Stormwater Treatment Facility	Parshall flume	22	24-in. throat (ea.)	3 units. Used also for flow distribution.
Des Moines, Iowa, At overflow points	Stick gages	Stage only	--	Most stage devices were associated with weirs. Velocities were spot checked with current meters [4].
	Float		Leopold & Stevens Type F, Model 68	
	Gas bubbler		Foxboro components	
Detroit, Mich., In-system conduits	Pressure actuated air bellows	Stage only, up to 40 ft	Bristol Company	118 units: sensors and transmitters. Installed in lines 10-ft diam and larger.
Milwaukee, Wis., In-system conduits	Ultrasonic	155	Tokyo Keiki Co., Ltd. (Badger Meter Co.) UF-100	2 sites, 5-ft and 12-1/2 ft diam conduits. Combined sewage.
Minneapolis-St.Paul, In-system conduits	Gas bubbler (air)	Stage only	--	40 units located in 5-12 ft diam conduits. Generally 3 per regulator: 1 upstream, 1 downstream on overflow, 1 on diversion to interceptor.
New Providence, N.J.	Magnetic flow meters	10	Fischer Porter	2 units (12-in. and 14-in.diam) tied to automated flow control.
New York, N.Y. Spring Creek Detention Tanks	Magnetic flow meters and gas bubbler	~2,000	Fischer Porter	Small 8-in. units suspended in large conduits to measure flow velocities.
Racine, Wisconsin, Dissolved Air Flotation Facility	Parshall flume	62	48-in. throat	High turbulence experienced due to proximity of screw pump.
San Francisco, Calif. In-system conduits	Gas bubbler	Stage only, 0-15 ft	--[a]	120 units: 116 in combined sewer conduits, 4 for tidal stage. All with remote readout and logging at central console [D611].
Seattle, Wash., In-system conduits	Gas bubbler, float-skow, sonic	Stage only	--[b]	Computed flows from stage differential and gate opening.
Washington, D.C., Conduit flows	Tracer solution and gas bubbler	170	--	System actuated by increase in flow level detected by gas bubbler. Lithium chloride was then injected into sewage at metered rate. Samples were collected at periodic time intervals 400-800 ft downstream and analyzed. Flows were computed on the basis of the lithium concentration detected [3].

a. BIF Transmitter Model 231-20, Bell & Gossett compressor 1/10 hp, Norgren pressure regulator all in vandal resistant enclosure. Approximate unit cost of $1,400 excluding hookup [11].

b. Float-skow prefired where small head differentials are encountered; sonic device where precision justified the cost (approximately $11,000 per installation including sensor and transmitter [16].

Note: cfs x 28.32 = l/sec
ft x .305 = m
in. x 2.54 = cm

Direct-Reading Quality Sensors

Another essential element in comprehensive stormwater management programs is direct-reading, remote sensing of quality characteristics. While the necessary parameters that can be remotely and continuously monitored are many in number, the results are not always satisfactory. For example, remote and continuous sensing attempts of BOD_5 and COD have not been very successful in the past. Unfortunately, these two parameters are generally considered among the most important gross water quality indicators.

Remote sensing in wastewaters to date is primarily restricted to *in situ* measurement by means of electrochemical transducers without altering the physical-chemical characteristics of the medium being tested by the addition of reagents, etc. These sensors are usually capable of measuring temperature, electrical conductivity, DO, turbidity, pH, solar radiation, chlorides, oxidation-reduction potential, and alpha and beta radioactivity. Electrochemical transducers are categorized according to the types of measurement (1) conductometric, (2) potentiometric, and (3) voltammetric. A detailed explanation of the theory involved is provided by Mancy [13, pp. 141-196].

The primary problem in the use of electrochemical transducer sensors is the fouling of the electrode probes, which makes the sensing system inoperative and requires extensive servicing and calibration. Few electrodes have a reliable method of self-cleaning. In the case of electrodes that rely on a chemical reaction at the probe-medium interface, such as pH sensing, polarization can occur and result in false readings.

Typical Application — The following parameters, which are sensed remotely at Seattle, Washington, illustrate the state-of-the-art, particularly in the case of a computer-controlled combined sewer system [10]:

1. Weather--rainfall intensity, duration, volume, and wind direction and speed.

2. Storm and combined sewer overflow volume--measured by sensing tide level, trunk level, wet well level, and regulator and tide gate opening.

3. Receiving water quality--DO, pH, temperature, solar radiation, turbidity, and electrical conductivity [Schneider Instrument Co., Model RM25AT].

4. In-system flows, storage, and potential problems--level sensors and explosive or other hazardous gas meters.

Other parameters that are remotely monitored less frequently in water quality monitoring programs throughout the country are oxidation-reduction potential, chloride, and fluoride.

Research – The recent emphasis on remote monitoring and control, and the demonstrated effectiveness of such systems, are encouraging the development of new devices.

One such device, a prototype unit using depolarization of scattered light measurements and capable of monitoring SS concentrations in wastewater (ranging from a few mg/l to 5,000 mg/l by weight), has been developed, and initial, very limited testing has been completed [24]. In the device, polarized light is directed into the flow stream via a polarizer (e.g., prism) and backscatter is measured in terms of a ratio (polarized to depolarized to light). During measurements, the present instrument requires attention for adjustments of the electronics. Further development has been recommended.

Remote and continuous sensing of chemical and biological parameters generally has not been possible in the past; however, some automatic analyzers do exist, such as those used for TOC determinations, and are continuously being perfected into reliable and accurate instruments. In sanitary engineering, these parameters must be known to apply complete combined sewer system management and control. The 5-day waiting period needed to obtain standard BOD_5 loadings is, of course, impractical for storm-flow routing decisions. Instead, the present practice is to attempt to collect large amounts of data and to construct prediction models. Such programs may take years to complete and the predicted result may prove to be disappointing. It is readily apparent, then, that much more emphasis should be placed on the research and development of acceptable remote sensing of these parameters.

Analysis

Effective data analysis should include, as a minimum, the definition of: (1) flow extremes (e.g., the ratio of dry-weather flow to maximum conduit capacity); (2) frequencies of occurrence of flow rates and parameter loadings; (3) types and frequencies of samples; (4) mean values and ranges of characteristics; (5) rates of change patterns and pre-storm impacts; (6) site and time dependency (e.g., size of area, land use, time of day, and seasonal effects); and

(7) special conditions or qualifications (e.g., construction impacts, plant bypasses, atypical flows or source area management, snow melt versus rainfall-runoff).

Because a wide scattering of data points may be expected, arraying the data, holding specific variables of interest constant, may yield significant information. For example, to determine the probable BOD_5 concentration variation in overflows within the District of Columbia, values were arranged as a function of the time elapsed since the start of overflow [18]. These data were based upon 35 storm events, 3 independent sources, and both combined and separate systems. The results, presented in Table 24, show clearly a progressive reduction in concentrations with time and a marked difference in the magnitude of the combined versus separate systems.

Statistical analysis of hydrologic data is generally justified because of the vast amount of source data available (e.g., U.S. Weather Bureau data); however, actual in-system quantity and quality data are seldom that abundant. One exception worth pursuing would be treatment plant influent concentrations on wet days versus dry days. In any analysis,

Table 24. BOD_5 CONCENTRATIONS VERSUS TIME FROM START OF OVERFLOW [18] DISTRICT OF COLUMBIA

Item	Source 1		Source 2		Source 3		Source 2	
Type	Combined		Combined		Combined		Separate	
Number of storms used in analysis	25		4		2		4	
Area identification	30-acre area adjoining northeast boundary		Two (100-250 acre) areas, one adjoining northeast boundary, the other near Georgetown		4,200 acres, northeast boundary (Kingman Lake)		265-acre area east of Anacostia River near 11th Street Bridge	
Population density, persons per acre	26		44-55		35		38	
BOD_5, mg/l	Range[a]	Mean	Range	Mean	Range	Mean	Range	Mean
Entire period of overflow or discharge	51-267	151	58-258 (110-470)[b]	157 (71)	23-232	77	8-23 (3-90)	15 (19)
First hour	110-253	191	58-238	139	187-232	210	10-22	16
Second hour	103-176	105	25-40	32	102-148	125	11-22	15
Third hour	81-120	85	none	none	35-155	61	4-12	7
Remainder	46-150	85	none	none	23-107	47	none	3

a. Ranges indicate the average low values and the average high values for individual storms where available. First hour, etc., is measured from start of overflow.

b. Reported range and mean of all (94) samples analyzed.

Sources:

Source 1 - Sampled data December 1968 to September 1969 [26].
Source 2 - Sampled data May to August 1969 [3].
Source 3 - Completed data July to August 1969 [5].

care must be taken in precisely defining the array limits and securing sufficient independent data points to obtain credibility. Data correlations with values found in the literature may facilitate expansion of minimum data resources for a starting basis of design.

Analytical procedures and reporting of results should follow those outlined in NPDES General Instructions, Appendix A — Standard Analytical Methods [20]. A valuable reference source is Methods for Chemical Analysis of Water and Wastes, 1971 Edition by EPA, with subsequent changes and errata.

In interpreting the data, not only must the uncertainties of the sampling and sample preservation be questioned but also the precision and accuracy with which the analytical work can be performed. Using BOD_5--perhaps the most commonly measured parameter in wastewater--as an example, the EPA 1971 text reports under "Precision and Accuracy" (using a *stock solution under ideal conditions*):

> Seventy-seven analysts in fifty-three laboratories analyzed natural water samples plus an exact increment of biodegradable organic compounds. At a mean value of 194 mg/l BOD, the standard deviation was ±40 mg/l. There is no acceptable procedure for determining the accuracy of the BOD test.

PROCESS AND EQUIPMENT EVALUATION

Whereas conventional wastewater treatment is based on comparatively steady-state conditions, stormwater treatment must adapt to *intermittent and random* occurrences. The flows and quality characteristics, as identified earlier, are subject to high variability over short periods of time. Because of this variability, there is no such thing as an "average" design condition.

How, then, does an engineer evaluate the performance efficiency of particular processes or equipment units in stormwater applications? First, the process or unit results should be valued against the program objectives--that is, should the treatment be oriented toward mass removals or limiting concentrations in the effluent? Mass removals are of primary concern when discharging into impoundments (lakes), estuaries, or other locations where accumulations may occur. Concentrations may be of primary interest where shockloadings or threshold values may be limiting, but receiving water flows are sufficient to prevent accumulations (i.e., each storm functions as an independent event). Second, effective utilization, such as hours of operation

per year, reduction in overflow occurrences, etc., is an important criterion. Third, service reliability must be evaluated (i.e., did the unit/process function as it should have and when it should have). A unit that performs only when *conditions are right* may be too restrictive for practical applications in stormwater management.

In addition to variability, the magnitude of the flows alone is a major design and evaluation constraint. Peak flow rates may equal or exceed 50 to 100 times dry-weather flows from the same area; thus, facilities must be exorbitantly large in size or supported by equalization storage. The economic justification of mammoth treatment facilities that are used only infrequently is difficult to ascertain. For example, San Francisco has an average of 381 hours of rainfall per year (4 percent of the total time) of which only 5 hours exceed an hourly intensity of 0.76 cm/hr (0.30 in./hr)--the design peak flow rate of the Baker Street combined overflow treatment facility. As a result, the facility would appear to be under-utilized 99.94 percent of the time!

High debris content in urban runoff driven by high velocities and turbulence may render sophisticated and complex equipment ineffectual or impossible to maintain. Because of the high flow rates (e.g., peak runoff from a 5-year storm), wastewater transmission costs are very high. This constrains options for centralization and frequently forces construction in prime real estate areas. Thus, not only simplicity but also compactness and aesthetic appearance of units are necessary considerations.

In summary, four primary guides are recommended for weighing future design and performance evaluations:

1. Reliability/durability based upon the frequency of total and partial unit operations to the total number of continuous storm events.

2. Efficiency as measured by the total mass of pollutants removed by the facility as a percentage of the total mass applied over the complete storm event including upstream bypasses.

3. Effluent quality as measured by the average and maximum concentrations measured in the discharge.

4. Dual use as measured by the effective utilization of the facility during non-storm periods.

Finally, it should be noted that there is no unique solution to all of the problems associated with stormwater discharges. Even the extreme of total capture of the runoff, while totally removing the pollutants, may have adverse effects on the receiving water by hindering natural flushing and replenishment.

Method of Approach

To assess process and equipment applicability to the stormwater problem, the following sources/methods are generally available: (1) site visits and interviews; (2) project reports, seminar papers, and published articles; (3) progress reports and records of post-construction performance; (4) general background literature surveys; and (5) records of construction periods and cost breakdowns. Having first reviewed the material compiled herein, the reader may be guided by this methodology to further his specific investigations.

It must be recognized that essentially all projects reviewed in the preparation of this text were designed primarily to *develop and/or demonstrate new or improved methods* of controlling the discharge into any waters of untreated or inadequately treated sewage or other wastes from sewers which carry stormwater or both stormwater and sewage or other wastes [27]. Thus, to induce marked advances in the state-of-the-art, projects were directed into generally uncharted areas of design expertise (e.g., abnormal loading rates, high equipment and material stresses for short periods, extreme turbulence, etc.). Therefore, the success or failure of a particular project is not as important as what was learned and can be applied to subsequent work.

For this reason, a major requirement of all projects is that facilities be included to maximize the flexibility of prototype operation (alternate sources of test flow and disposal, alternate reduced flow and/or increased loading configurations, capability of planned equipment shakedowns, etc.). It was observed that projects without this built-in flexibility were generally restricted severely in their performance.

The most important factors in assessing process and equipment performance are the project scale and pretreatment controls. The scale at which the demonstration tests were performed may tend to mask the credibility of the results obtained. Likewise, pretreatment may so alter the characteristics of the waste that the tests will be nonrepresentative of subsequent applications lacking such pretreatment.

Common scales are bench, pilot, and prototype. Bench scale is generally accomplished within a laboratory under precise control; pilot scale is field testing at a reduced scale and possibly using a synthetic flow; and prototype is full-scale but stressing a demonstration configuration. Pretreatment may include screening, flow equalization and/or settling, and feed control. For example, a test facility fed by a single constant-flow pump, or a restricting series of pumps, likely will not reflect prototype instream performance but rather prototype performance when balanced by upstream storage. Also, the pump suction may effectively screen out certain solids, floatables, and debris. Similarly, a test facility operated on a preferential basis, say on an 8:00 a.m. to 5:00 p.m. shift and/or on selected storms, will not provide the same data as a facility treating all storms at all hours (particularly with respect to reliability). Obviously, the facility that best approaches the prototype in size and operation is the most viable.

Another important factor is the location of the facility and the nature of the study area in which it is located. A facility located within or directly adjacent to a continuously manned treatment plant may reflect better maintenance and supervision, hence better operating results, than a remotely located unit with limited access. The acceptability of the unit to the public is a necessity. The nature of the study area (intensity of development, use, industrial flow component, climate, topography, etc.) may significantly influence unit performance and the attention it receives. Sampling methods, analysis, and control as well as the study duration must also be considered.

In assessing and/or executing all projects, the study objectives should be clearly identified, and a detailed program should be developed and adhered to. The percentage of total storms treated may be as important as the degree of efficiency obtained in selected storms. Innovations, repairs, and failures should be carefully logged to provide a basis for succeeding work.

Basic Design Data

Basic design data, operational controls and procedures, and simplified flowsheets should be sought for each project studied. How were the unit and its appurtenances sized? What were the available design modes (flow paths, recirculation ratios, biological or chemical feed rates, automatic or manual controls, sequential startup, etc.) and which ones were utilized?

Largely, the basic design data essentially are fixed at the same time that the physical dimensions are fixed, and the pumps and other support facilities are selected (exceptions include screen mesh, filter depths, selective bypassing, etc.). Flow controls, pretreatment applications, and chemical feed are then the basic variable tools used by the operator or designer to optimize the unit's performance for the individual storms. In practical applications, without some form of available storage, flow control options beyond the process unit loading flexibilities are minimal, because lowering the flow to the unit to improve efficiencies in the treated fraction results in corresponding flow increases in the untreated bypass fraction.

To establish a stormwater treatment process, in all but the simplest devices, there appears to be a similar need for a minimum level of prior storage to allow for startup, moderation of flows, and sustaining the process. Depending on the local hydrology and topography, this storage may be obtainable within the system *without* resorting to off-line units.

Finally, there must be provision for the ultimate disposal of the residue (e.g., tank dewatering and solids disposal) and plant deactivation between storms. Because storm events are intermittent, all processes are necessarily operated on a batch basis unless essentially total storage (capture) is effected or recycling is feasible.

Operational Results

Operational results include a description of the maintenance and operation activities completed, the volumes processed, pollutants (solids) removed, power and chemicals expended, and labor applied. Efficiencies vary from storm to storm. Ideally, efficiencies should be based on the total measured pollutants removed by treatment divided by the total pollutants in the untreated storm flow including bypasses. More commonly, however, they are the results of composite samples taken before and after the units, and do not account for bypasses. Normally, they are not flow weighted. For selected analysis, discrete samples may be collected and subsequently composited manually in proportion to the recorded flow rates. This procedure is costly and must be done with care. The multiple handling of the samples may introduce errors, particularly in respect to floatables and solids. To automate flow proportional samplers fully, the pre-storm guesswork must be exceptionally good. For example, with a not unusual 50 to 1 flow variation, the minimum size and frequency of sampling must be such as to arrive at a

total volume that is large enough for performance of all of the analyses but not so large as to overflow the container.

Thus, while no simple evaluation rules for assessment are possible, a prior knowledge of desirable features and limitations can provide effective guidelines.

CONTROL SYSTEMS

Because storms occur without respect for nights, holidays, and weekends, and give little advance warning, some form of automatic operational control is required. Treatment effectiveness is largely dependent upon the facilities coming on-line almost instantaneously and, to a varying degree, self-adjusting to changes in flow and concentration. Coordinating multiple facilities into a highly effective management program requires both remote sensing and centralized control. An introduction to control systems is presented here. Discussions of particular applications and features are presented in Sections VIII and XV.

System operational control spans a spectrum ranging from monitoring alone to complete, or "hands-off," automatic control. While a number of levels of development, each with several variations, could be delineated, there appear to be three basic stages: system monitoring, remote supervisory control, and automatic control [17]. Advances in control capability for urban water resources have evolved mostly from systems for monitoring field variables.

The basic elements of a control system may include all or combinations of the following: (1) remote sensors (rain gages, flow level and selected quality monitors--such as DO, TOC, SS, and/or pH probes, gate limit switches, etc.); (2) signal transmission (leased telephone wires, pneumatic circuits); (3) display and logging (central computer, graphic panels, warning lights); (4) centralized control capability (control of system gates and/or pumps from a central location); and (5) in the case of fully automated control, a computer program that makes decisions and executes control options based upon current monitoring data and memory instructions.

A block model for a complete automatic operational control system is shown on Figure 16. This represents an ultimate system and is a goal not yet achieved in major scale for management of any basic urban water resource function [17]. Approaches to this goal, however, appear to be well underway.

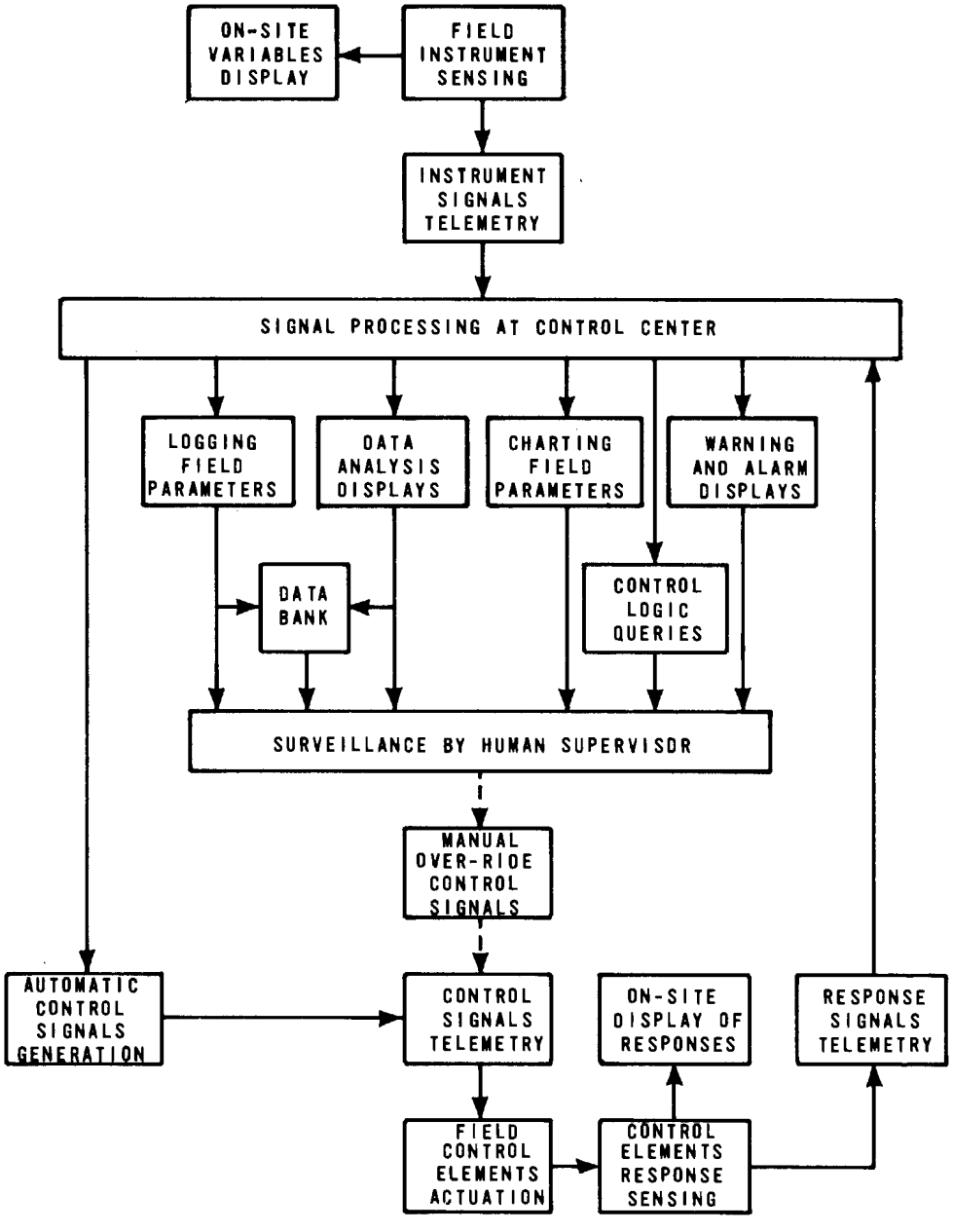

Figure 16. Model for automatic operational control system [17]

System Monitoring

The basic components start with field instrument sensing and the transmission of the signals back to a central processor and display. This is the basic remote monitoring function. "On-site variables display," when included, is for checking fidelity of instrument response, instrument malfunction, etc., at individual instrument sites. In the absence of this feature, instruments can be checked only by using auxiliary radio or telephone communications with the monitoring center. The simpler monitoring systems feature only data logging, visual display charting, and warning and alarm displaying. Some type of computer capacity is required for data analysis, but this can be off-line. Completely missing is any direct field control function.

Remote Supervisory Control

Remote supervisory control adds a remote manual control capability to the basic monitoring system. In this configuration the supervisor observing the monitoring display may initiate immediate corrective action by remotely opening or closing gates, changing pump speeds, etc. "Control logic queries" refer to supervisor interrogations of computer-programmed logic, which can range from elaborate algorithms incorporating prototype response simulation through simple retrieval of command alternatives stored in the computer memory. As in the situation for data analysis, computer access can be off-line.

Actuation of field control elements is performed remotely by manual supervisor command. In simpler systems, control element reponse to an actuation command can be ascertained indirectly by observing changes in affected field sensor signals. On the other hand, the "response signals telemetry" to the control center provides direct control-loop feedback, with an opportunity to damp system actuation response instabilities by using guidelines preprogrammed as part of the control logic.

Automatic Control

The next and final step to complete automatic operational control adds an "automatic control signals generator" and converts the manual control function to a manual override. Thus, a series of monitoring signals will prompt, through a computer analysis program and memory, a particular control response or sequence of responses to monitored data.

In stormwater management applications, the automation may be as simple as starting an auxiliary pumping unit when a

conduit flow depth exceeds a specified level, or it may be a complicated system involving dozens of rain gages, level sensors, multiple storage/treatment options and devices, all capable of intelligent and rapid manipulation to counter any storm pattern or emergency condition. Analysis of the systems requires an understanding of the components and their interrelationships. As with processes and equipment, evaluation depends upon performance.

COSTS

Costs of stormwater management facilities are highly dependent upon the size, the process, location, time of construction, and provisions for solids handling and disposal. The primary variables, exclusive of the process itself, are: land, weather, foundations, groundwater, access, conditions of the existing system, temporary services, operator facilities, component life, and aesthetics. The operator facilities include laboratories; showers and lockers; humidity, temperature, and ventilation controls; degree of automation, flexibility; etc. The sparsity and individuality of real installations make generalizations difficult and their use hazardous.

Of interest to the engineer/planner, with these limitations in mind, are (1) data sources, (2) transferability and updating, and (3) economies of scale.

Data Sources

Cost data were extracted from project reports, bid tabulations, contractor and/or manufacturer quotations, and published articles. Excellent general references based upon *conventional wastewater treatment processes* and broken down by unit function include the following: (1) estimates for facilities costs and manpower requirements, 1971 [9]; (2) cost of conventional and advanced treatment, 1968 [23]; and (3) cost and performance estimates for tertiary processes, 1969 [6]. Readers are cautioned that the estimating data and methods presented cannot in any way be used as a substitute for cost estimating based on detailed knowledge of a particular installation.

Estimates of cost for well-defined structures at definite locations for a current specific period, and involving fairly well-known working conditions, can be made with a reasonable degree of accuracy. A favorable comparison with actual bid prices for similar work also is important in that it adds a measure of certainty. The absence of any one of these essential elements lessens the level of reliability. The absence of all such elements reduces the

value of cost estimates to something that is largely judgment, supported wherever possible by adjusting available cost data.

Updating and Transferability

In presenting construction cost data in this report, an attempt has been made to adjust all data to a common base: an assumed U.S. Average Engineering News-Record (ENR) Construction Cost Index of 2000. This index, commonly used in engineering evaluations, is updated monthly and described in the magazine as follows:

> ENR developed cost indexes for 22 individual cities in the U.S. and Canada to show the trend in basic costs--construction materials and wage rates, in each major construction center. Except for steel which is priced at three major mill centers, the indexes use local prices and wages. They are not intended to measure the cost differential between cities. They include no special adjustments for variations in productivity or design requirements.
>
> Components and weighting: 200 hr common labor, 20-cities average; 25 cwt structural steel shapes, mill price; 20-cities averages of 22.56 cwt (6 bbl) of Portland cement and 1.088 Mbfm 2 x 4s lumber.

The trend of the ENR U.S. Average Construction Cost Index, plotted at semiannual intervals spanning the last 20 years, is shown on Figure 17. The June 1973 U.S. Average is 1896, and the average for 20 cities varies from a low of 1427 at Birmingham, Alabama, to a high cost of 2344 at New York.

The following relationship was used to adjust costs cited in the literature to report (ENR 2000) values:

$$\text{Report value} = \frac{2000}{\text{ENR CC Index (for city at time of construction)}} \times \text{cited cost}$$

If the month was not given for the year construction occurred, the ENR Index for June of that year was used.

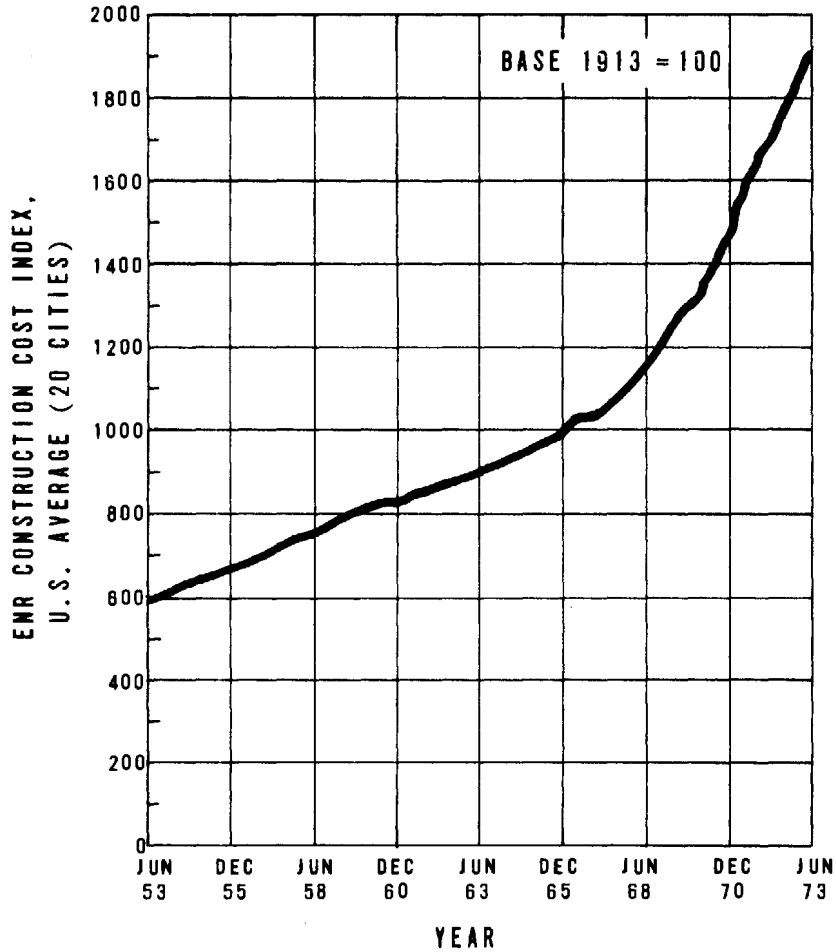

Figure 17. Construction cost trend

Similarly, by projecting cost trends into the future, order of magnitude costs of deferred construction may be obtained:

$$\text{Future cost} = \frac{\text{ENR CC Index (projected to the time of future construction)}}{2000} \times \text{report value}$$

Economies of Scale

In conventional processes and equipment for domestic wastewater treatment, there are well defined economies of scale. Thus, it is normally expected that a unit of capacity in a

large plant will cost less than a unit of capacity in a small plant. The general relationship is of the form:

$$C_A = KQ_A^M$$

Where C_A = cost of an item of capacity Q_A

K = base cost factor and equals C_B/Q_B^M

M = measure of the economy of scale

The derivation, cost factors, and applications are discussed in detail by Berthouex [2]. It was reported that, in general, M has a range of 0.5 to 0.9, with each type of equipment and each type of processing plant having its characteristic value. The resultant cost projections are estimated to be within a range of ±20 to 30 percent.

Again, the sparsity of data limits a determination of the degree of direct applicability of this concept within the stormwater management field.

Part III

MANAGEMENT ALTERNATIVES AND TECHNOLOGY

Section VII

SOURCE CONTROL

Source control includes all measures for reducing stormwater pollution that involve actions within the urban drainage basin before urban runoff enters the sewer system. Included are measures that affect both the quantity and quality of urban runoff. Examples of source control measures for reducing the quantity and/or the rate of urban runoff include (1) use of roof storage, (2) intentional ponding, (3) disconnection of area and roof drains, and (4) use of porous pavements. Examples of source control measures for improving the quality of urban runoff include (1) decreasing dustfall on the area by reducing air pollution, (2) erosion control during construction of buildings and highways, (3) placing berms around small lots, (4) improved street sweeping practices, (5) removal of lead compounds from gasoline, and (6) improved methods for deicing pavements.

In the past, efforts in water pollution control have been concerned primarily with point sources--houses, factories, offices, etc. In the future, as the nation restores the quality of its surface waters, it will be necessary to pay greater attention to nonpoint (area) sources. In this discussion attention will be focused on nonpoint sources in urban areas.

QUALITY CONTROL MEASURES

In dealing with environmental problems it is often necessary to make trade-offs. For example, by reducing the concentrations of sulfur dioxide or particulate matter in the air, urban runoff quality is improved. In determining the significance of air pollution control, it is important to consider possible benefits of improved quality of local watercourses. In general, practices leading to urban cleanliness will also lead to improvement in water quality of urban runoff.

It is extremely difficult to quantify the potential reduction in stormwater pollution resulting from improved air pollution control. Contaminants scoured from the air would probably be reduced in proportion to the reduction of their airborne concentrations. Industrial stockpiles and open storage of granular materials are sources of both air and stormwater pollutants resulting from wind action and/or rain falling directly on the material. However, most of the contamination of urban runoff is caused by air pollution particles previously settled on city surfaces--roofs, sidewalks, and streets. The amount of contaminants picked up by urban runoff is dependent upon fallout rate, frequency and efficiency of street cleaning, and the path that runoff follows before entering a stormwater inlet.

Solid Waste Management

Although intentional disposal of waste materials on city streets and sidewalks is generally prohibited, it is practiced commonly. Spent containers from food and drink, cigarettes, newspapers, floor sweepings, and a multitude of other materials carelessly discarded become street litter. Unless removed by street cleaning equipment, these materials often end up in stormwater discharges. Enforcement of antilitter laws, convenient location of sidewalk waste disposal containers, and public education programs are all source control measures that may provide significant water pollution control benefits. It is difficult, however, to measure the effects of such measures in economic terms. Two benefits that do occur are aesthetic improvement of the urban area and reduced pollution of the urban runoff.

Materials tossed through stormwater inlets are not part of the street litter problem, but they are part of the stormwater problem. Typical examples are leaves, garden clippings, and used automobile crankcase oil. Public education is the most valuable measure for reducing this type of stormwater pollution. Most people have very little idea of what happens to waste discharged to stormwater inlets. By establishing a solid waste management program that encourages proper disposal of most solid wastes, benefits may accrue to water pollution control. Again, it is difficult to measure these benefits in economic terms.

Street Cleaning

Specially designed street sweeping vehicles are used by most cities to prevent the accumulation of litter, dirt, and dust on city streets. In some cities part of this work is still done manually, but mechanized equipment is being

relied upon increasingly for reasons of efficiency. Street sweeping is done for aesthetic reasons, not for water pollution control, although most material removed by street sweeping would otherwise be included in storm sewer discharges or combined sewer overflows during wet weather. The effectiveness of street sweeping operations with respect to stormwater pollution has been analyzed in two recent EPA-sponsored studies [12, 8]. It was found that a "...great portion of the overall pollutional potential is associated with the fine solids fraction of the street surface contaminants" [8]. Current broom-type street sweepers, however, were relatively inefficient in removing fine material smaller than 400 microns. From the data reported in Table 25 it can be concluded that the smaller the particle size, the lower the sweeper efficiency. The overall efficiency of the street sweeping operation can be greatly increased by scheduling streets for cleaning and posting "no parking" signs for those hours and by improving such schedules. Tests by APWA of vacuum cleaning equipment for municipal street sweeping indicated removals of 95 percent or higher for fine material.

Table 25. STREET SWEEPER EFFICIENCY VERSUS PARTICLE SIZE [8]

Particle size, microns	Sweeper efficiency, %
2,000	79
840-2,000	66
246-840	60
104-246	48
43-104	20
<43	15
Overall	50

Use of Chemicals

Chemicals of a wide variety are spread in the urban environment for various purposes. The two most important groups of chemicals are those used for control of snow and ice on highways and those for the control of vegetation.

Street runoff from the melting of ice and snow, mixed with chloride salts, finds its way to nearby receiving waters by several different means: (1) through local sewage treatment plants via combined and sanitary sewers, (2) through storm sewers, and (3) by dumping of snow removed from streets into the nearby waterways. According to Field:

> The dumping of extremely large amounts of accumulated snow and ice from streets and highways, either directly or indirectly into nearby water bodies, could constitute a serious pollution problem. These deposits have been shown to contain up to 10,000 mg/l sodium chloride, 100 mg/l oils, and 100 mg/l lead. The latter two constituents are attributable to automotive exhaust. [13]

In terms of source control, several things can be done to minimize the contamination of urban runoff by deicing chemicals and abrasives [1, 13]. One possibility is simply to prohibit the use of certain chemicals: in particular, those highly toxic substances, such as cyanide and chromium compounds, which have been added to deicing salts as anticaking agents and corrosion inhibitors. Although highway departments may be willing to accept prohibition of additives, few desire the prohibition of the use of deicing salts, such as sodium chloride and calcium chloride.

The easiest way to minimize adverse effects of deicing salts is by using less of them. For example, in Ann Arbor, Michigan, the following steps were found useful in reducing the rates of salt application without sacrificing safety: (1) no salt application on straight, flat sections; (2) better training for operators of salt-spreading equipment; and (3) keeping records of salt use [5]. In addition, Ann Arbor is investigating new types of spreaders and snowplows, improved cab monitoring devices that will control salt application more accurately, public information programs on winter driving, and new training programs for equipment operators. In many other cities salt application virtually replaces snowplowing. However, as adverse impacts of excessive salt use are more widely recognized, more

cities will develop programs to minimize salt use without sacrificing highway safety.

Toward the goal of reducing road salt damage, the following possibilities were investigated in an EPA-sponsored project: (1) external in-slab thermal melting; (2) stationary/mobile melters; (3) substitute deicing compounds; (4) compressed air types of snowplows; (5) adhesion reducing pavement materials; (6) solar energy storing pavement substances; (7) electromagnetic ice shatterers; (8) improved drainage, enhancing runoff, accident reduction, and snow melt control/treatment; (9) salt retrieval/treatment; and (10) improved tire/vehicular design [13]. A deicer users' manual and a manual of design for storage facilities and recommended methods of handling deicing materials throughout storage is to be provided in another study [13].

An alternative to salt is the use of abrasives, such as sand and cinders. Abrasives, however, do not fit into the "bare pavement" policy which now prevails, and they can also become stormwater pollutants. Although abrasives generally contribute only small amounts of dissolved solids to stormwaters, they can contribute significant portions of the SS. Furthermore, large quantities of sand and cinders can clog storm and combined sewers. Most cities remove a large portion of the abrasives during street cleaning, but the added cost of collecting large amounts of sand and cinders must be included in the cost of their use. In addition, abrasives are more expensive (by weight) than sodium chloride. With salts, however, many of the costs, such as those for corrosion damage, degradation of water supplies, and damage to roadside vegetation, are indirect and often ignored. Hence, in some instances, a more complete economic comparison might favor abrasives over salt.

With regard to control of vegetation, fertilizers, pesticides, herbicides, and other chemicals are widely used in cities and have been found in urban runoff [11]. The amount of these materials in urban runoff, taken all together, has been found to be rather high [7]. Limited use of these substances consistent with their intended purpose and careful attention to their storage and distribution should be practiced.

Erosion Control

There are many methods for reducing sediment yield from urban areas, especially for land undergoing development. This is important because of the extreme sediment yields often occurring on such land. For example, in a 1961-1964

study of sediment movement in the Scott Run basin, Fairfax County, Virginia, it was determined that "...highway construction areas, varying from less than 1 to more than 10 percent of the basins at a given time, contributed 85 percent of the sediment" [9]. The sediment yield of the highway construction area was found to be 10 times that from cultivated land, 200 times that from grassland, and 2,000 times that from forest land. Scott Run is a suburban tributary of the Potomac River. In a study of the entire Potomac River it was estimated that the Washington Metropolitan Area, which consists of 2 percent of the basin, produced 25 percent of the sediment in the river.

For this reason the EPA sponsored a project to develop "Guidelines for Erosion and Sediment Control Planning and Implementation" [3]. Among the techniques described to reduce sediment yields are: (1) proper selection of building and highway sites, (2) maintenance of native vegetation, (3) use of mulches, (4) drainage channel protection modification, (5) careful backfilling after laying pipes, (6) protection of stockpiles for removed earth, (7) sediment retention basins, (8) timing of clearing and grading during season when erosion is less, (9) traffic control, and (10) use of fences to protect trees. Four appendixes of that report contain technical information on 42 sediment and erosion control products and practices.

QUANTITY AND/OR RATE CONTROL MEASURES

For almost any system for abating storm sewer discharges and combined sewer overflow pollution, the cost involved is very sensitive to both the quantity and the rate of the flows involved. For example, a combined sewer overflow screening facility designed for a 1-year, 1-hour rainfall might treat several million gallons within 1 or 2 hours. Any techniques or devices to slow the flow of significant amounts of stormwater to the stormwater inlets would increase the period in which the runoff volume could be treated. Hence, a smaller and less expensive treatment facility would afford the same degree of pollution abatement. Slowing the flow of stormwater to the inlets, especially from pervious areas, allows additional recharge of the groundwater by percolation of the stormwater into the ground.

By temporarily detaining (on-site) runoff from rainfall directly falling on an impervious area, it is possible to reduce the rate of flow into the sewer system. This results in less flow to store and/or treat. If this is coupled with retaining (on-site) runoff from pervious areas for percolation into the ground, then the total volume of water entering the sewer system is reduced. Hence, considerable

savings in both operation and initial construction costs of stormwater facilities will result when the amount of stormwater is attenuated. Methods used for slowing or dampening the *rate* at which flows enter the sewer system by temporarily holding runoff on an area are termed "detention" measures. Methods used to prevent runoff from entering the sewer system at all are termed "retention" measures.

In an article entitled "Storm Water for Fun and Profit," several urban detention/retention techniques are described [10]. At an industrial facility in Bensenville, Illinois, regrading of the plant site produced multiple benefits: (1) the plant is now above the flood plain; (2) borrow pits are now lagoons to retain stormwater; (3) the stormwater is used as industrial supply water at a cost of $0.04/kl ($0.015/1,000 gal.); and (4) lagoons were landscaped and provide aesthetic and recreational benefits (picnicking, fishing, etc.). In other projects utilization of rooftops, tennis courts, ponds, and plazas to detain and/or retain precipitation in urban areas is described.

An example of a large scale municipal multipurpose detention basin is the Melvina Ditch Detention Reservoir constructed by the Metropolitan Sanitary District of Greater Chicago in Oak Lawn, Illinois [6]. The reservoir, which has a capacity of 204,000 cu m (165 acre-ft), was designed to serve as a recreation facility in addition to its primary function of reducing local flooding. Steps were constructed down the basin side slope. Winter recreation activities include tobogganing and skiing on a large earth mound formed in one corner of the basin. A concrete paved area (anti-erosion section at the inlet) is flooded during winter months to serve as an ice-skating rink. During the summer months, it is used for volleyball, basketball, and general play. The reservoir is shown in operation as a stormwater detention facility in Figure 18.

In a rather unique approach to urban runoff control, the EPA has sponsored an investigation of porous pavements [4]. Pavement for streets, sidewalks, and parking lots make up a large percentage of the impervious area of metropolitan areas. If precipitation could pass through the pavement and recharge the groundwater, stormwater would become a resource rather than a substance to be disposed of. This would require that the precipitation would be sufficiently treated by passage through the soil so that street surface contaminants would not pollute local groundwater. Although porous pavements were originally developed for highway safety purposes, they show considerable promise as a method to attenuate runoff. In cold climates, porous pavements may not be practical because of the danger of paving destruction

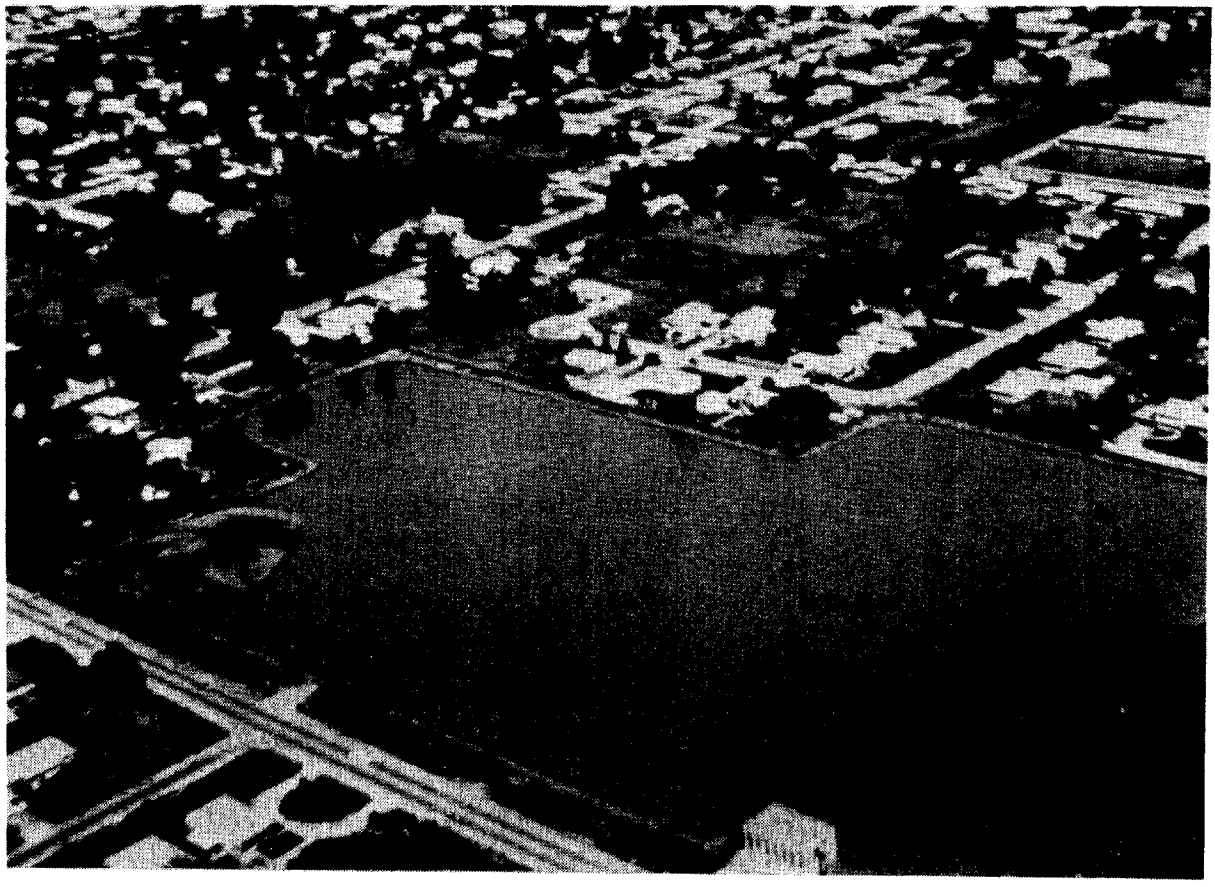

Figure 18. Stormwater surface detention pond (Chicago)

due to the alternate freezing and thawing of a semisaturated subbase. It has been reported that frost-heave can be overcome by providing a gravel base layer of sufficient thickness to equal or exceed the gravel base reservoir capacity required to accept the rainfall percolating through the porous pavement [4]. In the study it was concluded that "roads designed with porous asphaltic concrete were found to be generally more economical than conventional roads with storm sewers." Other benefits, including augmentation of municipal water supplies, highway safety, relief of flash flooding, preservation of vegetation, and prevention of puddling, are described in the published report.

In most urban areas, considerable economic and intangible benefits are available from improved planning and practices for the disposal of stormwater. Here, the most difficult problem may be in adding a constraint for architects, planners, and departments of public works to consider in their practices. As described in "Storm Water for Fun and Profit," however, it is often worth the effort [10].

An example of a community where several different methods of source control are being employed is The Woodlands north of Houston, Texas. This will be an entirely new community situated on 73 sq km (18,000 acres) to be developed over the next 20 years. Two major goals are (1) preserving as much as possible the natural environment of its setting and (2) minimizing increases in pollution loadings resulting from increased stormwater flow rates [2].

Runoff will be recharged to the ground, as near as possible to the point where the rain falls. This will be achieved by a "natural drainage concept" which includes the following:

1. The existing natural drainage system will be utilized to the extent possible in its unimproved state. Existing drainage courses are grass covered, thus slowing and reducing runoff through infiltration.

2. Where drainage channels are required, wide, shallow swales lined with existing native vegetation will be used instead of cutting narrow, deep drainage ditches.

3. Flow retarding devices, such as retention ponds and recharge berms, will be used where practical to minimize *increases* in runoff volume and peak flow rate due to urbanization. A storage reservoir will decrease the amount and rate of runoff and promote

recharge of groundwater. Erosion control measures in construction areas will minimize the increased solids loadings in runoff from such areas.

4. Drainage pipes and other flood control structures will be used only where the natural system is inadequate, such as at high density urban activity centers. Plans presently call for the use of porous pavements to reduce runoff from streets.

5. Control will be exercised over the type and amount of fertilizers, pesticides, and herbicides to minimize pollution of the runoff.

It has been estimated that the drainage system will cost an average of $243/ha ($600/acre), compared with perhaps $486/ha ($1,200/acre) for a conventional system [2].

Section VIII

COLLECTION SYSTEM CONTROL

Collection system control, as presented in this text, pertains to those management alternatives concerned with the interception and transport of the wastewaters. These alternatives include sewer separation, catch basin cleaning, infiltration/inflow control, line flushing and polymer injection, regulators, and remote monitoring and control. Each of these alternatives is discussed in this section.

A definition drawing of the common elements of an interception and transport system and their interrelationships, adapted from [6, Plate IV-4], is shown on Figure 19. The system shown represents a combined sewer system and illustrates, in particular, a major problem in sewer separation projects: the dual-use house plumbing that carries both roof and area drainage in addition to sanitary wastes.

SEWER SEPARATION

General

Sewer separation--the conversion of a combined sewer system into two separate sanitary and storm sewer systems, in which the sanitary sewer may be a gravity, pressure, or vacuum system--has often been touted as the ultimate answer to the problem of abating combined sewer overflow pollution of receiving waters. In recent detailed studies, however, it has been pointed out that sewer separation is not a panacea and that, in most cases, it is a poor alternative. A review of the history and current thinking and findings about sewer separation is presented and discussed below.

Separation of domestic sewage and industrial wastewaters from stormwater can be accomplished in three ways: (1) by adding a new sanitary sewer and using the combined sewer as

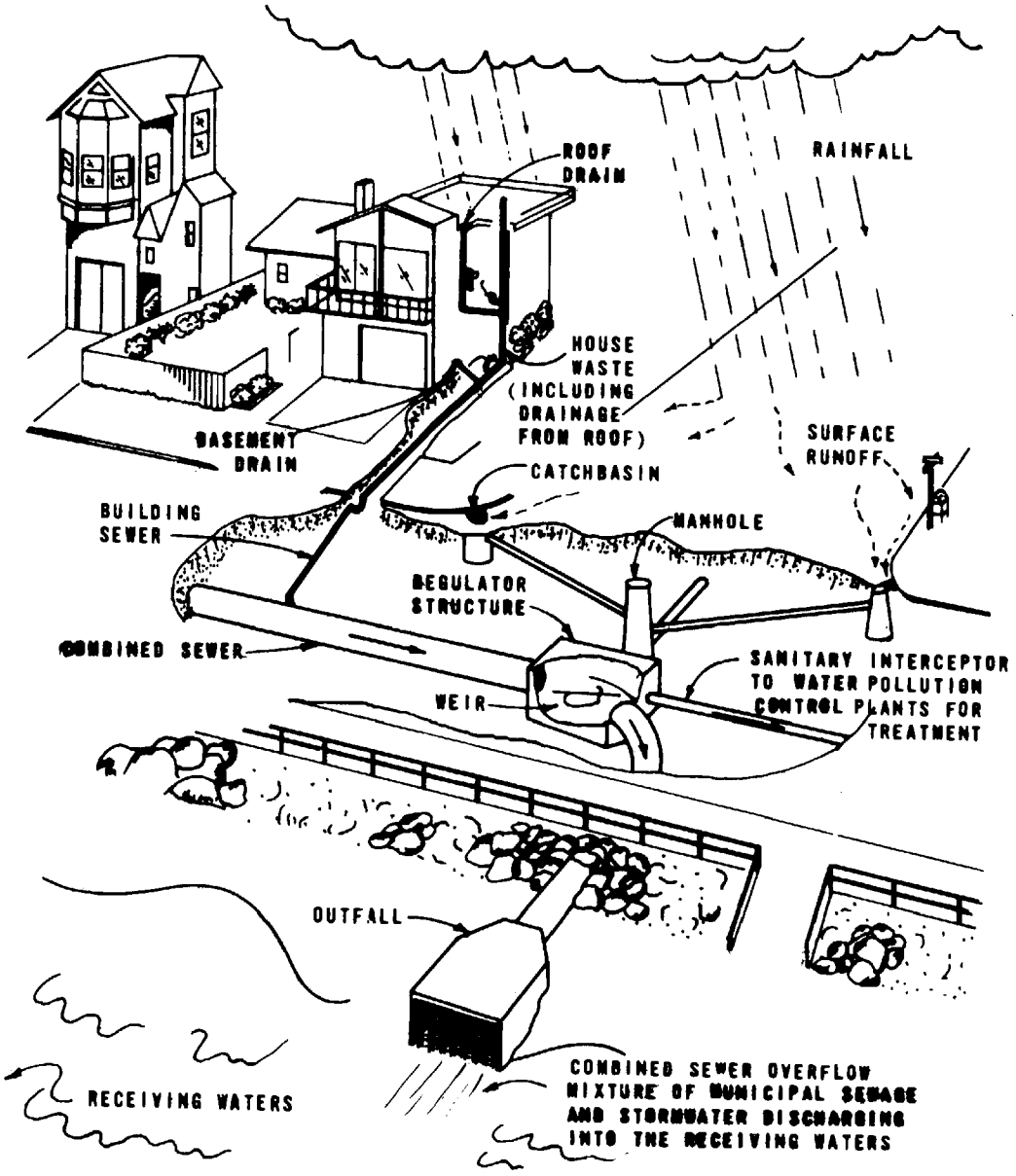

Figure 19. Common elements of an interceptor and transport system [6]

a stormwater sewer; (2) by adding a new storm sewer and using the combined sewer as a sanitary sewer; or (3) by adding a "sewer within a sewer" pressure system. The latter method, originated in 1965 by Professor Gordon M. Fair, is designed to withdraw the domestic sewage fraction of flows from existing plumbing systems and transmit it through a sequence of added components. These components consist of (1) a storage, grinding, and pumping unit within each building, (2) pressure tubing fished from the unit through the existing building sewer line to the existing combined sewer, and (3) pressure piping inserted in the existing combined sewer extending to the existing interceptor sewers. From there the sewage is conveyed by gravity to the treatment plant. The remaining capacity in the existing combined sewer is used to convey only stormwater to the receiving waters. The selection of one of the three methods of sewer separation for implementation depends on technical feasibility and economic conditions [12].

The practice of sewer separation has been underway for many years without the full benefit of recent technological information regarding the characteristics and quality of storm sewer discharges and the possible alternatives. There are two main reasons for reconsidering the once acceptable practice of sewer separation. The first reason is the change in physical conditions and quality standards from the past which encompasses the following: (1) increases in urban impervious areas and municipal water usage, causing overflows of increased duration and quantity; (2) rapid industrial expansion, causing increased quantities of industrial wastewaters in the overflows; (3) increasing environmental concern for better water quality management; and (4) the realization that the total amount of available fresh water is limited and that complete reclamation of substantial portions of the flow may be necessary in the future. The second reason is that based on new findings from extensive EPA-sponsored and other research during the past decade sewer separation may be an unsuitable and uneconomical solution for combined sewer overflows. These new findings are that (1) separated storm sewer discharges contain pollutants that affect the receiving water and create new problems [4, 35]; (2) storm sewer discharges occur more frequently and last longer than combined sewer overflows because combined sewer regulators prevent overflows during minor rainfall events; and (3) many alternatives exist that decrease the pollution at a cost of one-half or less than that of sewer separation.

In a survey conducted by the AWPA, it was found that as of 1962 approximately one-fourth of the total U.S. population

(50 million persons) was served in whole or in part by combined sewer systems [42]. Furthermore, it was reported that there were 14,212 overflows in the total 641 jurisdictions surveyed; of these, 9,860 combined sewer overflows were reported from 493 jurisdictions. Until 1967, the most common remedial method reported was sewer separation, and of 274 jurisdictions with plans for corrective facilities construction, 222 indicated that some degree of sewer separation would be undertaken.

Detailed Analysis

Sewer separation will continue to be used to some degree in the future and thus an investigation of the methods, their advantages and disadvantages, and their costs is warranted. There are three categories of sewer separation systems: pressure, vacuum, and gravity.

The most comprehensive study of the pressure or "sewer within a sewer" concept was published by the ASCE [12] in 1969. The greatest disadvantage of pressure systems is generally higher costs, as shown in a comparison of pressure and gravity system costs in the cities of Boston, Milwaukee, and San Francisco presented in Table 26. The ratios of pressure to gravity costs are 1.4, 1.5, and 1.5, respectively. The in-sewer pressure lines varied from 6.3 to 40.6 cm (2-1/2 to 16 inches) in diameter and pressure control valves limited the line pressure to 2.11 kg/sq cm (30 psi). A major portion of the costs is the "in-house separation" which can be as high as 82 percent of the total cost for separation using a pressure system [12]. Besides the high costs, other disadvantages of pressure systems are that (1) they are difficult to maintain; (2) they require complex controls; and (3) they are dependent on electricity for operation. It is important to realize that approximately 72 percent of all combined sewers are less than 0.61 meters (2.0 feet) in diameter, making it difficult to install the pressure pipe.

The advantages are that (1) as an alternative, they provide an additional degree of latitude in sewer design, (2) there is minimal construction interference to commerce and traffic, and (3) they are handy in low areas.

Sewer separation of existing combined sewers has historically been accomplished by utilizing gravity systems. The advantages of gravity sewer separation are that (1) all sanitary sewage is treated prior to discharge; (2) treatment plants operate more efficiently under the relatively stable sanitary flows; (3) other alternatives are less reliable

Table 26. ESTIMATED COSTS OF SEWER SEPARATION IN VARIOUS CITIES

Location, [Ref.]	Study area acreage	Population, density/acre (year)	Estimated cost[a], $/acre		
			Type 1[b] (gravity)	Type 2[c] (gravity)	Type 3 (pressure)
Boston, Mass. [12]	53 (along Summer St.)	--	150,400	--	204,800
Boston, Mass. [9]	12,000	--	81,800	--	--
Bucyrus, Ohio [49]	2,340	5.5 (1969)	4,930	4,660	--
Chippewa Falls, Wis. [9, 48]	90	--	--	8,420	--
Chicago, Ill. [20]	240,000	--	28,220	--	--
Cleveland, Ohio[d] [18]	13,000	11.7 (1968)	32,300		--
Des Moines, Iowa[e] [8]	1,836	--	6,450		--
Milwaukee, Wis. [12]	157 (along Prospect Ave.)	72.0 (1966)	23,330	--	34,330
Sandusky, Ohio[d] [51]	2,205	16.5 (1969)	20,680		--
San Francisco, Calif. [12]	303 (along Laguna St.)	67.5 (1960)	41,210	--	61,140
Seattle, Wash. [30]	925 (Southwest District)	--	--	9,740	--
Seattle, Wash. [30]	695 (East Central District)	--	--	9,950	--
Washington, D.C. [31]	11,741	45.0 (1965)	66,250	--	--
Washington, D.C. [31]	12,800	45.0 (1965)	52,950	--	--
Regional costs[d,f] [42]					
New England	NA[g]	--	35,580		--
Middle Atlantic	NA	--	24,350		--
South Atlantic	NA	--	24,530		--
Southern	NA	--	16,720		--
Midwest	NA	--	10,710		--
West	NA	--	9,250		--
National average [51]	NA	--	18,260		--

a. Adjusted to ENR = 2000.

b. Type 1 is constructing new sanitary sewers and using existing combined sewers for storm sewers.

c. Type 2 is constructing new storm sewers and using existing combined sewers for sanitary sewers.

d. Type 1 or Type 2 not identified in report.

e. Combination of Type 1 and Type 2.

f. Average costs.

g. NA = not available.

Note: acres x 0.405 = ha

overall because of external power requirements; (4) no land acquisition is necessary; (5) receiving water pollution loads can be reduced by 50 percent (according to independent studies [49, 30]); and (6) little increase in manpower is required.

Disadvantages of gravity systems may be divided into three categories: nonquantifiable, separation effectiveness, and costs. Nonquantifiable disadvantages, which based on past experience are the most important, are that (1) considerable work is involved in in-house plumbing separation; (2) there are business losses during construction; (3) traffic is disrupted; (4) political and jurisdictional disputes must be resolved; (5) extensive policing is necessary to ensure complete and total separation; and (6) considerable time is required for completion (e.g., in 1957 separation in Washington, D.C., was estimated to take until sometime after the year 2000 to complete) [24]. Separation effectiveness disadvantages are as follows: (1) there is only a partial reduction of the pollutional effects of combined sewer overflows [30]; (2) urban area stormwater runoff contains significant contaminants [7, 4]; and (3) it is difficult to protect storm sewers from sanitary connections (either authorized or unauthorized). Estimated costs for gravity sewer separation are shown for various cities in Table 26.

The cost disadvantages of separation, when compared to some conceptive alternative solutions, are indicated in Table 27. Again, the major reason for the higher costs of sewer separation are in-house plumbing changes which can be as high as 82 percent of the total sewer separation costs [12].

Conclusions

On the basis of currently available information, it appears that sewer separation of existing combined sewer systems is not a practical and economical solution for combined sewer overflow pollution abatement. Several cited alternatives listed in Table 27 suggest other solutions, most of which are considerably less expensive and should give better results with respect to receiving water pollution abatement. In addition, storm sewer discharges may not be allowed at all in the future, thus forcing collection and treatment of all sewage and stormwater prior to discharge. In this case, the argument for either separate or combined sewers is moot.

The choice between sewer separation and other alternatives will be controlled by the uniqueness of each situation. The examples cited in Table 27 leave no doubt that any alternative to sewer separation is the better choice. However,

Table 27. SEWER SEPARATION VERSUS CONCEPTUAL ALTERNATIVES

Location, [Ref.]	Capital costs[a], $ Separation	Capital costs[a], $ Alternative	Cost ratio[b]	Alternative
Boston, Mass. [9]	997,280,000	779,692,000	1.3	Deep tunnel storage
Bucyrus, Ohio [49]	15,957,000	9,220,000	1.7	Lagoon system
Chicago, Ill. [20]	6,772,255,000	1,322,378,000	5.1	Storage tunnels and quarries
Cleveland, Ohio [18]	372,405,000	111,842,000	3.3	Offshore stabilization ponds
Detroit, Mich. [33]	2,859,185,000	2,859,000	1,000.0[c]	Sewer monitoring and remote control of existing combined sewer storage system
Seattle, Wash. [30]	15,486,000	~8,185,000	1.9[d]	Computer controlled in-sewer storage system
Washington, D.C. [7]	677,778,000	353,333,000	1.9	Tunnels and mined storage

a. Adjusted to ENR = 2000.

b. Ratio of separation cost to alternative cost.

c. Alternative costs are for first phases only and do not include future total system.

d. Separation costs are only for southwest and east central Seattle, while alternative costs are for the total combined sewer area.

local conditions elsewhere may very well dictate at least partial separation as the best solution for combined sewer overflow abatement. This is being done in Seattle, Washington [30]. Seattle's partial separation program provides for removal of all street drainage from sanitary sewers and for continued discharge of roof leaders and foundation drains to sanitary sewers. In any event, if done properly, the required feasibility studies of the various possible methods for combined sewer overflow abatement may reduce the unit cost significantly.

In any event, a thorough feasibility study of combined sewer overflow abatement methods is required. The results of such a study should indicate significant unit cost reductions for whatever method or combination of methods is implemented.

INFILTRATION/INFLOW CONTROL

A serious problem results from (1) excessive infiltration into sewers from groundwater sources and (2) high inflow rates into sewer systems through direct connections from sources other than those which the sewers are intended to serve. Inflow does not include, and is distinguished from, infiltration. The sources and control of infiltration and inflow are discussed in this subsection.

Sources

Infiltration is the volume of groundwater entering sewers and building sewer connections from the soil through defective joints, broken, cracked, or eroded pipe, improper connections, manhole walls, etc. Inflow is the volume of any kind of water discharged into sewer lines from such sources as roof leaders, cellar and yard drains, foundation drains, commercial and industrial so-called "clean water" discharges, drains from springs and swampy areas, depressed manhole covers, cross connections, etc.

Inflow sources generally represent a deliberate connection of a drain line to a sewerage system. These connections may be authorized and permitted; or they may be illicit connections made for the convenience of property owners and for the solution of on-property problems, without consideration of their effects on public sewer systems.

The intrusion of these waters takes up flow capacity in the sewers. Especially in the relatively small sanitary sewers, these waters may cause flooding of street and road areas and backflooding into properties. This flooding constitutes a health hazard. Thus these sanitary sewers actually function as combined sewers, and the resulting flooding becomes a form of combined sewer overflow.

The two types of extraneous water, inflow and infiltration, which intrude into sewers do not differ significantly in quality, except for the pollutants unavoidably or deliberately introduced into waters by commercial-industrial operations [13]. Foundation inflow, for example, does not vary greatly from the kind of water that infiltrates sewer lines from groundwater sources. Basement drainage may carry wastes and debris originating in homes, including laundry wastewater.

Inflow Control

Correction of inflow conditions is dependent on regulatory action on the part of city officials, rather than on public

construction measures. If elimination of existing inflows is deemed necessary because of adverse effects of these flows on sewer systems, pumping stations, treatment plants, or combined sewer regulator-overflow installations, new or more restrictive sewer-use regulations may have to be invoked.

The effects of inflows into sewers can be greatly reduced by a variety of methods. Many authorities advocate the discharge of roof water into street gutter areas--or onto on-lot areas in the hope that it will percolate into the soil [13]. Discharging roof or areaway drainage onto the land or into street gutters reduces the immediate impact on the sewer system by allowing reduction of the volume and attenuation of the flow. The use of pervious drainage swales and surface storage basins within urban areas allows the stormwater to percolate into the ground.

Depressed manholes (those with vented covers in street areas where runoff can pond over the cover) can be repaired or the covers replaced with unvented covers.

Infiltration Control

Excessive infiltration is a serious problem in the design, construction, operation, and maintenance of sewer systems. Neither combined sewers nor separate sanitary sewers are designed to accept large quantities of such infiltration flows.

The problem of infiltration involves two basic areas of concern: (1) prevention in new sewers by adequate design, construction, inspection, and testing practices, and (2) the elimination or cure of existing infiltration in old sewers by proper survey, investigation, and corrective measures. Control of infiltration in new sewer systems involves engineering decisions and specification of the methods and materials of sewer construction, pipe, joints, and laying procedures and techniques. Correction of existing sewer infiltration can be accomplished by three basic approaches: (1) replacing the defective component, (2) sealing the existing openings, and (3) building within the existing component.

Infiltration Control in New Construction — The types of pipe and joints selected for use in sewer construction play an important role in the prevention and cure of infiltration. The effectiveness of installation and conditions under which they function can have an equally great influence on the watertightness of the resulting sewer structures and their ability to resist excessive water entry while in service.

Choice of sewer pipe — Improvements in pipe materials assure the designer's ability to provide proper materials to meet any rational infiltration allowances he wishes to specify. The upgrading of pipe manufacture to meet rigid quality standards and specifications has eliminated the basic question of watertightness of pipe material. The important issues to consider in pipe material selection are structural integrity, strength of the wastewater character, and local soil or gradient conditions. Combinations of these factors may make one material better suited than another or preferable under certain special installation conditions. In such situations, pipe materials are often chosen for reasons other than their relative resistance to infiltration. The cost of the pipe is usually a small part of the total project cost. For rough estimating purposes, the cost of installed sewer pipes (excluding manholes, laterals and connections, appurtenances, etc.) ranges from $0.97 to $1.55 per cm diameter per linear meter ($1.25 to $2.00 per inch diameter per linear foot).

Materials commonly used for sewer pipe construction include (1) asbestos cement, (2) bituminous coated corrugated metal, (3) brick, (4) cast iron or ductile iron, (5) concrete (monolithic or plain), (6) plastic (including glass fiber reinforced plastic, polyvinylchloride, ABS, and polyethylene), (7) reinforced concrete, (8) steel, (9) vitrified clay, and (10) aluminum. All of these materials, with the possible exceptions of the plastics and aluminum, have been used in sewer construction for many years.

Since sewer pipe made from the plastic materials is relatively new, a brief description of the use of plastic pipes is included below.

Solid wall plastic pipe usually refers to materials such as polyvinylchloride (PVC), chlorinated polyvinylchloride (CPVC), polyvinyldichloride (PVDC), and polyethylene. These materials are lightweight, have high tensile strength, have excellent chemical resistance, and can be joined by solvent welding, fusion welding, or threading. The PVC is probably the most commonly used plastic pipe because it is stronger and more rigid than most of the other thermoplastics; however, PVC is available only in diameters up to 30.5 cm (12 inches).

Polyethylene pipe is finding major use as a liner for deteriorated existing sewer lines [26]. Several lengths of polyethylene pipe can be joined by fusion welding into a long, flexible tube. This tube is then pulled into the existing sewer. When the existing house laterals have been connected to this new pipe liner, the result is a watertight

pipe with no joints. Polyethylene pipe is available in diameters up to 121.9 cm (48 inches).

Acrylonitrile butadiene styrene (ABS) is most commonly used for truss pipe. Truss pipe, deriving its name from its cross-section configuration, was invented in 1946. It has a good modulus of elasticity which, when under loading, contributes about equally with the soil envelope to resisting deflection. This nonbrittle characteristic usually prevents the pipe from breaking so long as continuous lateral support is provided. Chemical weld sleeves are the most common method of joining this pipe.

Glass fiber reinforced plastic (FRP) pipe differs from those mentioned above in that the polymer resins are reinforced with glass fiber. This glass fiber reinforcement results in an exceptionally high strength/weight ratio. FRP is available in diameters from 5.1 to 152.5 cm (2 to 60 inches) and in lengths of 3.05, 6.1, and 12.2 meters (10, 20, and 40 feet).

Selection of sewer joints — For controlling infiltration there is probably nothing as important as the sewer joints. No sewer system is better than its joints. A good joint must be watertight, root penetration-tight, resistant to the effects of soil, groundwater, and sewage, long-lasting, and flexible.

Until about 30 years ago, cement mortar was the standard joint material. However, it was subject to shrinking and cracking and tended to break loose from pipe bells and spigots. To overcome these defects, various forms of asphaltic compound joints were used. These were satisfactory only so long as care and skill were used in their preparation.

Several jointing methods in use today have proved to be a vast improvement over both the cement mortar and asphaltic compounds. These include PVC and polyurethane, compression gaskets, and chemical weld joints.

PVC and polyurethane joints — PVC and polyurethane joints are most common for clay sewer pipes. Polyurethane has been found satisfactory because of its high resilience. Clay pipe manufacturers now use a polyester compound cast on the spigot and into the bell to make the seal. A compression gasket is used to make the seal between these surfaces as the spigot is placed inside the bell.

Compression gasket joints — Compression gasket joints have been used for many years. The gaskets are most commonly

made of natural rubber, synthetic rubber, or various other elastomers. These joints are used on asbestos cement pipe, cast iron pipe, concrete pipe, vitrified clay pipe, and certain types of plastic pipes. Compression gasket joints are most effective against infiltration while still providing for deflection of the pipe.

Chemical weld joints — Chemical weld joints are used to join certain types of plastic pipes and glass fiber pipes. The joints provide a watertight seal. It has been reported that, on the basis of field tests, jointing under wet or difficult-to-see conditions does not lend itself to precise and careful workmanship. Thus special care is necessary in preparing these joints in the field. More experience with these pipes in sewer applications is necessary to determine the longevity of this type of joint.

Heat shrinkable tubing — A new type of joint developed recently is the heat shrinkable tubing (HST) [27]. The HST material begins as an ordinary plastic or rubber compound which is then extruded into sections of tubing. The tubing is then heated and stretched in diameter but not in length. After cooling it retains the expanded diameter. If a length of 8-inch diameter tubing is expanded to 16 inches, it will conform to any shape between 8 and 16 inches when reheated. This characteristic gives the HST the ability to form a tight fit around sewer pipe joints.

The material recommended for HST joints is a polyolefin which has a high degree of chemical resistance and the ability to resist scorching and burning, and is both economical and easy to apply. To further assure HST joint strength and resistance to internal pressure, a hot melt adhesive is recommended as an inner surface sealant. The adhesive material has a melting temperature close to that of the HST and will bind the tubing and pipe materials together as the tubing cools to its final shape. Both propane torches and catalytic heaters can be used as the heat source.

Physical properties of the HST reportedly were better than those of currently used joint materials:

> The coupling of commercial sewer pipe, both butt-end and bell and spigot, with watertight joints using heat shrinkable plastic tubing is feasible and economically practical. Used in conjunction with a hot melt adhesive it can surpass in physical and chemical strength any of the conventional joints presently being used with clay, concrete, and asbestos-cement nonpressure sewer pipe. [27]

Protection of concrete pipe — Corrosion exhibited inside sewers is generally of two types: (1) that occurring above the liquid level caused by the formation of sulfuric acid from any hydrogen sulfide in the sewer atmosphere and (2) that below the liquid level caused by high concentrations of sulfates or other mineral and organic acids often encountered in industrial wastes. Acidic soils can attack the exterior of the pipe. Concrete pipe is generally the most susceptible to these types of corrosion. The severity of corrosion in concrete sewers has greatly increased in recent years because of the rapid expansion of the population, industrial growth, the use of garbage disposal units, and increasing control of inflow and infiltration into the sewer.

To control the corrosion of sewer pipe, especially concrete, a method of impregnation has been developed recently. The corrosion control is achieved by impregnating the concrete pipe with an inert or noncorrosive material that reduces the permeability and porosity of the concrete by actually sealing the interior surface of the concrete [28]. This prevents hydrogen sulfide from penetrating into the concrete and at the same time reinforces the physical and mechanical properties of the concrete. The material used as the impregnating liquid is a modified sulfur formulation that was found to possess both impregnating ability and corrosion resistance.

Other materials, such as vinyl vinylidene chloride, vinyl acetate/acrylic, and reclaimed rubber emulsion, will resist corrosion by actually forming a coating on the concrete surface.

Sections of concrete sewer pipe were given applications of several different treatments (impregnation and various coatings) and placed in severe corrosive sewer environments at three sites in Texas during 1970 and 1971. Preliminary results from these tests indicate that the various treatments are functioning effectively. Additional long term experience is necessary for complete evaluation.

Sewer design considerations — Factors to be considered during design include allowance for infiltration, manholes and covers, and maintainability.

Since it is virtually impossible to avoid some infiltration, the added flow must be accommodated. Infiltration design allowances vary tremendously from one municipality to another [13, 41]. A distinction should be made between infiltration design allowances and infiltration construction allowances. The infiltration design allowance should

include the maximum infiltration anticipated during the life of the sewer, while the construction allowance should be the maximum allowable infiltration at the time of construction. The construction infiltration will increase continuously throughout the life of the project. APWA has recommended the establishment of a construction infiltration allowance of 185 l/cm diameter/km/day (200 gal./inch diameter/mile/day) or less. This is not unreasonable in light of improvements in pipe and joint materials and construction methods.

Average and peak design flows should be related to the actual conditions for the area under design. Too often flow criteria are taken from a standard textbook. Adequate subsurface investigations should be undertaken to establish conditions that may affect pipe and joint selection or bedding requirements. Consideration should be given to the constructability and maintainability of the sewer system. This calls for direct communication between the designer and maintenance personnel.

Manholes should be designed with as few construction joints as possible. In recent years the development of custom-made precast manholes with pipe stubs already cast in place has reduced the problem of shearing and damage of connecting pipes. The use of flexible connectors at all joints adjacent to manholes reduces the possibility of differential settlement shearing the connecting pipes.

Manhole cover design is attracting serious attention in view of evidence that even small perforations can produce sizable contributions of extraneous inflow. A single 2.5-cm (1-inch) hole in a manhole top covered with 15.2 cm (6 inches) of water may admit 0.5 l/sec (11,520 gpd) [41]. Solid sealed covers should be used for manholes in areas subject to flooding. If solid covers are used, alternative venting methods must be used to admit air or remove sewer gases.

Construction considerations — The most critical factor relative to infiltration prevention is the act of construction. The capability of currently manufactured pipes and joints to be assembled allowing minimal infiltration must be coupled with good workmanship and adequate inspection, expecially at house connections.

Trenches should be made as narrow as possible but wide enough to permit proper laying of pipe, inspection of joints, and consolidation of backfill. Construction should be accomplished in dry conditions. If water is encountered

in the excavation, dewatering should be done by sump pumping, use of well points, or deep wells.

Bedding and backfill material should be a combination of both coarse and fine aggregate. The coarse aggregate provides good support (by having a wider column of support beneath the pipe), while the fine aggregate fills the voids in the coarse material to retard the transmission of water. Crushed stone with a gradation of 1.9 to 0.6 cm (3/4 to 1/4 inch) is recommended. In the Gulf Coast area, where infiltration is of particular concern, success has been reported [46] using a bedding mixture composed of 46.5 percent coarse shell, 42.7 percent sand, 6.4 percent portland cement, and 4.4 percent bentonite. Bentonite is used because it is a clay mineral with an expanding lattice structure that enables it to swell with the addition of water. Thus, it will act as a barrier to water flow by expanding into and filling the voids in a sand/coarse aggregate mixture. The selected backfill materials, preferably the same as the bedding materials, should not be "dropped" into the trench but should be carefully placed and compacted in three separate lifts.

Backfill should be thoroughly compacted around the pipe. The backfill should be placed and packed by hand under and around the pipe and compacted by light hand tampers. Machines can be used for compacting as backfilling continues to the original ground surface.

Infiltration can be minimized by proper construction procedures, rigid inspection of materials and methods of installation, and performance of soil and groundwater tests. In addition, the integrity of all newly constructed sewers should be checked by post-construction performance tests (low-pressure air, infiltration measurement, or exfiltration measurement) prior to acceptance.

Infiltration Control in Existing Sewers — The correction of infiltration involves a lengthy, systematic approach or plan of action. The haphazard use of investigative devices and sealing equipment is ineffectual and extremely costly. An infiltration control plan should include the following steps: (1) identify the drainage system, (2) identify the scope of the infiltration (flow measurement, rainfall simulation), (3) physically survey the sewer system (soil conditions, groundwater conditions, smoke tests), (4) perform an economic and feasibility study (determine the most cost effective locations for infiltration control), (5) clean the sewer if necessary, (6) make a television and photographic inspection, and finally, (7) restore the sewer system.

Identification of the drainage system includes a review of detailed maps of the sewer system; field checks of the line, grade, and sizes; and identification of sections and manholes that are bottlenecks.

To identify the scope of the infiltration, it is necessary to measure and record both dry- and wet-weather flows at key manholes. Groundwater elevations should be obtained simultaneously with sewer flow measurements.

A physical survey of the entire sewer system, or that portion of major concern, where every manhole is entered and sewers are examined visually to observe the degree and nature of deposition, flows, pipe conditions, and manhole condition should be made. Smoke testing may reveal infiltration sources only under low groundwater conditions. If the groundwater table is above the pipe, the smoke may be lost in the water. Soil conditions and groundwater conditions should also be noted.

An economic and feasibility study is necessary to determine the locations where the greatest amount of infiltration can be eliminated for the least expenditure of money. In some cases, it may be most cost effective to provide additional treatment capacity at the sewage treatment plant for the infiltration. Cost estimates can be developed for subsequent correctional stages as necessary.

Cleaning – A systematic program of sewer cleaning (1) can restore the full hydraulic capacity and self-scouring velocity of the sewer and its ability to convey infiltration without flooding; (2) can aid in the discovery of trouble spots, such as areas with possible breaks, offset joints, restrictions, and poor house taps, before any substantial damage is caused; and (3) is a necessary prerequisite to television and photographic inspection. It is one of the most important and useful forms of preventive maintenance. This type of program involves periodic cleaning on a regular, recurring basis.

By frequent hydraulic flushing of the sewers, the interval between mechanical cleanings of the sewer can be extended. This will be discussed in more detail later in this section.

Equipment used in cleaning falls into three general classifications: (1) rodding machines, (2) bucket machines, and (3) for small sewers, hydraulic devices. The rodding machine, which is used most commonly, removes heavy conglomerations of grease and root intrusions. The bucket machine utilizes two cables threaded between manholes. One cable

pulls the bucket into the sewer line; the other withdraws the bucket when it is full. It also allows the bucket to be moved back and forth in case it becomes stuck in the sewer. The bucket machine is effective in removing sand, gravel, roots, and grease from large sewers. Hydraulic devices include both high velocity water jet and other hydraulically propelled devices such as the "sewer ball." The high velocity water jet is very effective in removing sand, gravel, and grease. Care is necessary in using high pressure hydraulic cleaning equipment. In sandy soil where the sewer may be defective, creation of voids may cause collapse of the pipe.

Inspection – The purpose of sewer inspection is to reveal sewer restrictions; to detect cracks, broken joints, and improper connections; and to locate sites of infiltration and exfiltration. Modern inspection methods include both television and photographic techniques. Hydraulic methods, such as exfiltration tests, may also be used.

Television inspection is performed by pulling a closed circuit camera through the sewer. The picture is viewed on a monitor and may be recorded on videotape for a permanent record. Thus, the amount of infiltration can be estimated and the condition of the sewer can be ascertained.

Television systems used for sewer inspection are constantly being refined to reduce the size of the equipment, to increase the clarity, color, and depth of image, and to reduce its operational cost. It is believed that the television system will eventually be accepted as standard equipment for sewer inspection.

Photographic inspection is similar in nature to television inspection. It is more convenient and economical in operation, but no intimate and immediate knowledge is available. The pictures may be on stereo slides, slides, or movie film, and must be taken at predetermined distance intervals.

The major advantages of using these media are that sewer problem areas can be readily located and diagnosed without expensive excavating. Arbitrary use of these inspection techniques without preplanning and budget review and without precleaning is not recommended. Repair techniques can be applied better and repairs can be made less expensively in conjunction with inspection.

Restoration – On the basis of the results of an inspection program, the engineer can decide on the appropriate methods for correcting structural deficiencies and eliminating infiltration. The correction alternatives include

(1) replacement of broken sections, (2) insertion of various types of sleeves or liners, (3) internal sealing of joints and cracks with gels or slurries, and (4) external sealing by soil injection grouting. Additional detailed information is available in recent EPA reports on jointing materials [13, 41, 27] and sealants [29, 13, 41, 25].

The method most commonly used to correct structural defects and infiltration (in sections where major structural damage is not present) is internal sealing with gels or slurries.

The use of a chemical blocking method to seal sewer cracks, breaks, and bad joints is much more economical and feasible than sewer replacement or the inadequate concrete flooding method. With recent improvements in television and photographic inspection methods, sealing by chemical blocking appears to be an even more encouraging method than heretofore. Chemical blocking is accomplished by injecting a chemical grout and catalyst into the crack or break. A sealing packer is used to place the grout and catalyst. The packer has inflatable elements to isolate the leak, an air line for inflation, and two pipes for delivering the chemical grout and catalyst to the packer. An example of a packer is shown on Figure 20. During the repair the two inflatable end sections isolate the leak and chemical grout and catalyst are injected into the center section. Then the center section is inflated to force the grout from the annulus between the packer and the sewer wall into the leak. When the repair is complete, the packer is deflated and moved to the next repair location.

The current use of acrylamid gels as chemical blocking agents is restricted by their lack of strength and other physical limitations. Recently, improved materials, such as epoxy-based and polyurethane-based sealants, have been developed [29]. These new sealants have exhibited suitability even under conditions of erratic or intermittent infiltration where acrylamid gels failed because of repeated dehydration. The only difficulty in applying the new sealant materials has been that, because of the physical properties of the sealants, new application equipment incorporating a mixing mechanism is required. The cost of this new equipment is approximately the same as the existing equipment. Modification of existing packing equipment to accept the new sealants has been found to be feasible.

Sewers may also be sealed by inserting sleeves or liners, as discussed previously.

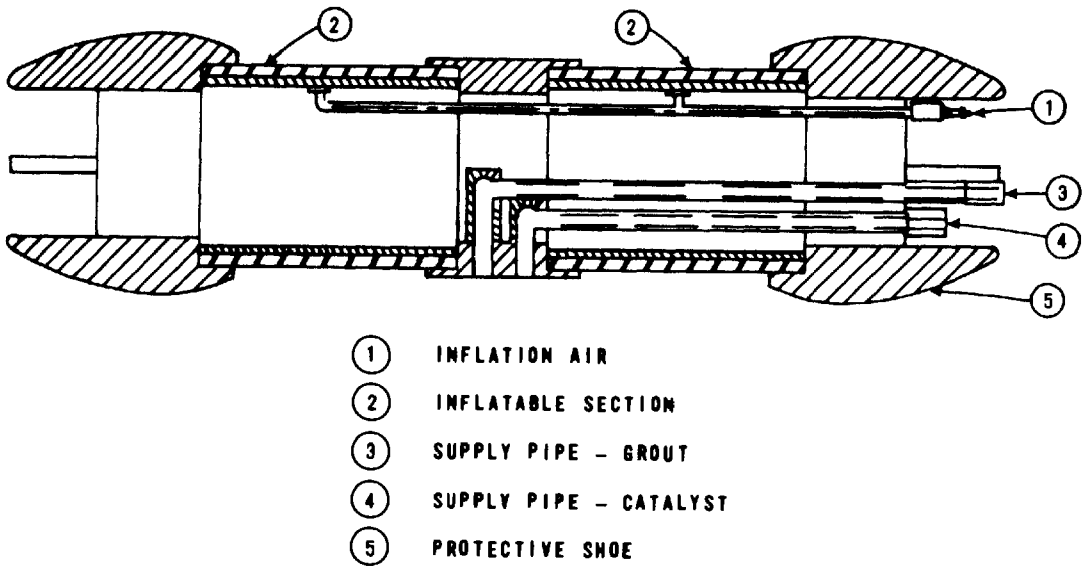

Figure 20. Packer - sealer with two inflatable sections [29]

FLUSHING AND POLYMER INJECTION

Flushing, the systematic scouring out of pipelines during dry-weather periods, and polymer injection to increase pipeline carrying capacities temporarily are examples of innovative methods to counter specific transport system deficiencies.

Flushing

In many cases the high pollutional load of combined sewer overflows is the result of pipeline deposits being scoured by the high-velocity storm flows. These deposits (see Figure 82) are solids that settle out or are trapped within the lines during antecedent dry-weather periods. Systematic sewer flushing is designed to remove the material periodically as it accumulates and to convey it hydraulically to the treatment facilities. Thus, peak flow rates at the downstream point are limited to the regulator/interceptor capacities prior to overflow.

The concept of sewer flushing is not new. It has been in use for several decades primarily for small lateral sewers

with grades too flat to be self-cleansing. However, such applications are relatively uncommon today. Because of the volume of flow required and the noted system limitations, stormwater applications to date have been limited to relatively small lateral sewers.

Cleansing deposited solids by flushing in combined sewer laterals with mild slopes (0.001 to 0.008) was studied using 30-cm (12-inch) and 46-cm (18-inch) clay sewer pipes, each 244 meters (800 feet) long [22]. Experimental data were then used to formulate a mathematical design model to provide an efficient means of selecting the most economical flushing system that would achieve a desired cleansing efficiency within the constraints set by the engineer and limitations of the design equations.

It was found that the cleansing efficiency of deposited material by periodic flush waves is dependent upon flush volume, flush discharge rate, sewer slope, sewer length, sewer flow rate, and sewer diameter. Neither details of the flush device inlet to the sewer nor slight irregularities in the sewer slope and alignment significantly affected the percent cleaning efficiencies.

Using sewage instead of clean water for flushing was found to cause a general, minor decrease in the efficiency of the cleansing operation. The effect is relatively small and is the result of the redeposition of solids by the trailing edge of the flush wave.

The effects of flush wave sequencing were found to be insignificant as long as the flush releases were made progressively from the upstream end of the sewer. Also, the cleansing efficiencies obtained by using various combinations of flush waves were found to be quite similar to those obtained using single flushes of equivalent volumes and similar release rates. However, both of these hypotheses are based on the limited findings from tests run on relatively short sewers. Therefore, further testing is required to give a complete picture of the relative importance of these two factors on the overall performance of a complete flushing system.

A prototype flush station developed during the study can be inserted in a manhole to provide functions necessary to collect sewage from the sewer, store it in a coated fabric tank, and release the stored sewage as a flush wave upon receipt of an external signal.

One prototype lateral flushing demonstration project was considered for an 11-ha (27-acre) drainage area in Detroit

but as yet has not been undertaken. Two system layouts were considered: one designed for 61 percent daily deposited solids removals and the other for 72 percent removals, depending on the number of flushing stations used [22]. Rough cost estimates were made as shown in Table 28. The cost for telemetry and remote control of the flushing system would be dependent on the degree of automation needed as well as on the physical layout of the system in relation to the control center.

Polymer Injection

Polymer gelled slurry injections into sewage have resulted in significant hydraulic friction reductions; hence a temporary increase (up to 144 percent reported [40]) in line capacities [40, 21, 36]. This increase is significant in stormwater applications because the sewer surcharges

Table 28. ESTIMATED FLUSHING COSTS FOR DEMONSTRATION PROJECT[a] [22] DETROIT, MICHIGAN

Alternate	1	2
Number of flush stations per lateral	2	4
Area per lateral, acres	9	9
Daily solids removal, percent	61	72
Installed cost of fabric flush tanks	$6,380	$12,900
Cost of telemetry and controls	--[b]	--[b]
Monthly power cost	$ 2.24	$ 4.69
Monthly maintenance cost	$ 115	$ 229
Capital cost per acre	$ 708	$ 1,430
Monthly maintenance and power cost per acre	$13.00	$ 26.05

a. ENR = 2000.

b. Not estimated.

Note: Acre x 0.405 = ha.

associated with excess wet-weather flows are generally of short duration; thus, a marginally inadequate line can be bolstered by polymer injections at critical periods. In effect, this increases the overall treatment efficiency by allowing more of the flow to reach the treatment plant, while flooding from sewer surcharges is decreased.

The polymers tested in Richardson, Texas, included Polyox Coagulant-701, Polyox WSR-301, and Separan AP-30 [40]. The latter showed the greatest resistance to shear degradation (which may be important in very long channels) but was the least effective hydraulically. Tests conducted indicated that the polymers and nonsolvents were not detrimental to bacteria growth and therefore would not disrupt the biological treatment of sewage in wastewater treatment plants. Tests conducted on algae in a polymer environment indicated that the polymers have no toxic effects and only nominal nutrient effects. Fish bioassays indicated that in a polymer slurry concentration of 500 mg/l, some fish deaths resulted but that, in practice, concentrations above 250 mg/l would provide no additional flow benefits. It was reported that polymer concentrations of between 35 and 100 mg/l decreased flow resistance sufficiently to eliminate surcharges of more than 1.8 meters (6 feet) [40].

The Dallas Water Utilities District, Dallas, Texas has constructed a prototype polymer injection station (see Figure 21) for relief of surcharge-caused overflows at 15 points along a 2,440-meter (8,000-foot) stretch of the Bachman Creek sewer [36]. During storms, the infiltration ratio approaches 8 to 1. The sanitary sewer is 46 cm (18 inches) in diameter for the first 1,220 meters (4,000 feet) and then joins another 46-cm (18-inch) diameter sewer and continues on. The Dallas polymer injection station was built as a semiportable unit so that it can be removed and installed at other locations needing an interim solution once a permanent solution has been implemented at Bachman Creek.

The polymer injection unit is enclosed by a 1.3-cm (1/2-inch) steel sheet, 3.1 meters (10 feet) in diameter by approximately 7.9 meters (26 feet) in height. The upper half provides storage for 6,364 kg (14,000 lb) of dry polymer and also contains dehumidification equipment. The lower half contains a polymer transfer blower, a polymer hopper and agitator for dry feeding, a volumetric feeder and eductor, and appurtenances. The unit is entirely self-contained with only external power and water hookup necessary for the unit to be in operation.

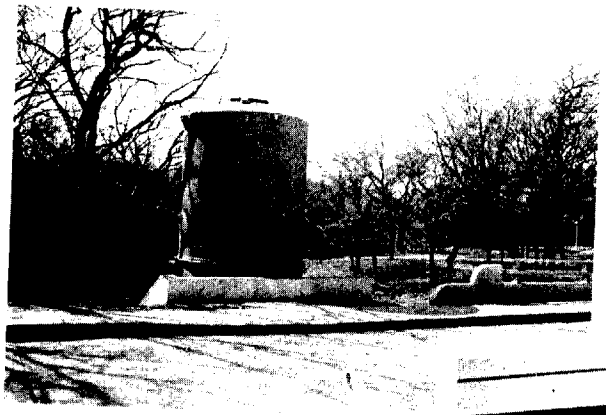

(a)

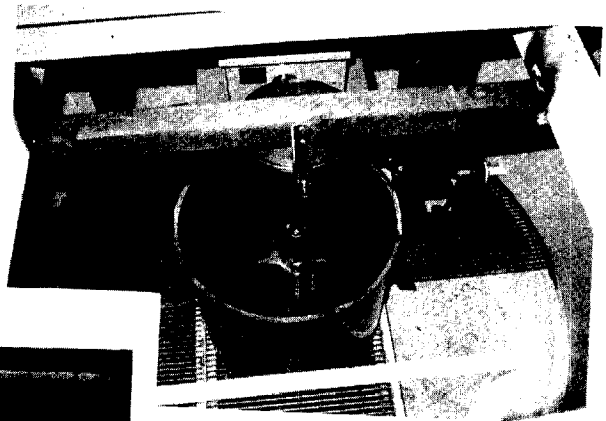

(b)

(c)

(d)

Figure 21. Polymer injection station for sanitary sewer (Dallas)

(a) Polymer injection facility (b) Station interior showing eductor and polymer mixing tank (c) Bachman Creek with sanitary sewer manhole to left of column in foreground (d) Bachman Creek showing location of flow metering vault and polymer injection site

The unit is set up for fully automatic operation and may be started by any of three external level sensors located 458 meters (1,500 feet) upstream, at the injection site, and 458 meters (1,500 feet) downstream.

Several polymers were tested, and Polyox WSR-301 was chosen to be used when the Bachman Creek unit becomes operational. The polymer is expected to reduce the surcharge by 6.1 meters (20 feet) over the first 1,220-meter (4,000-foot) length. The maximum equipmental feed rate is expected to be 2.3 kg/min (5 lb/min). The actual polymer feed rate will be flow paced by the liquid level in the sewer to maintain a polymer concentration of about 150 ppm in the sanitary sewer. The unit is capable of supplying a dosage of 500 to 600 mg/l if needed. It is expected that the unit will be in operation about five times per year and that surcharge reduction will be complete in approximately 7 minutes after start of polymer injection (travel time in the affected reach of sewer).

The actual construction cost for the unit, including installation of the site, was $146,000 (ENR 2000). The unit was scheduled to be operable by mid-1973 with operational performance and data available one year thereafter. Maintenance is expected to be limited to a site visit and unit exercise every 2 months.

REGULATORS

Historically, combined sewer regulators represent an attempt to intercept all dry-weather flows, yet automatically provide for the bypass of wet-weather flows beyond available treatment/interceptor capacity. Initially, this was accomplished by constructing a low dam (weir) across the combined sewer downstream from a vertical or horizontal orifice as shown on Figure 22. Flows dropping through the orifices were collected by the interceptor and conveyed to the treatment facility (see Figure 19). The dams were designed to divert up to approximately 3 times the average dry-weather flow to the interceptor with the excess overflowing to the receiving water. Eventually more sophisticated mechanical regulators were developed in an attempt to improve control over the diverted volumes. No specific consideration was given to quality control.

Recent research, however, has resulted in several regulators that appear capable of providing both quality and quantity control via induced hydraulic flow patterns that tend to separate and concentrate the solids from the main flow [10, 50, 15]. Other new devices promise excellent quantity control without troublesome sophisticated design.

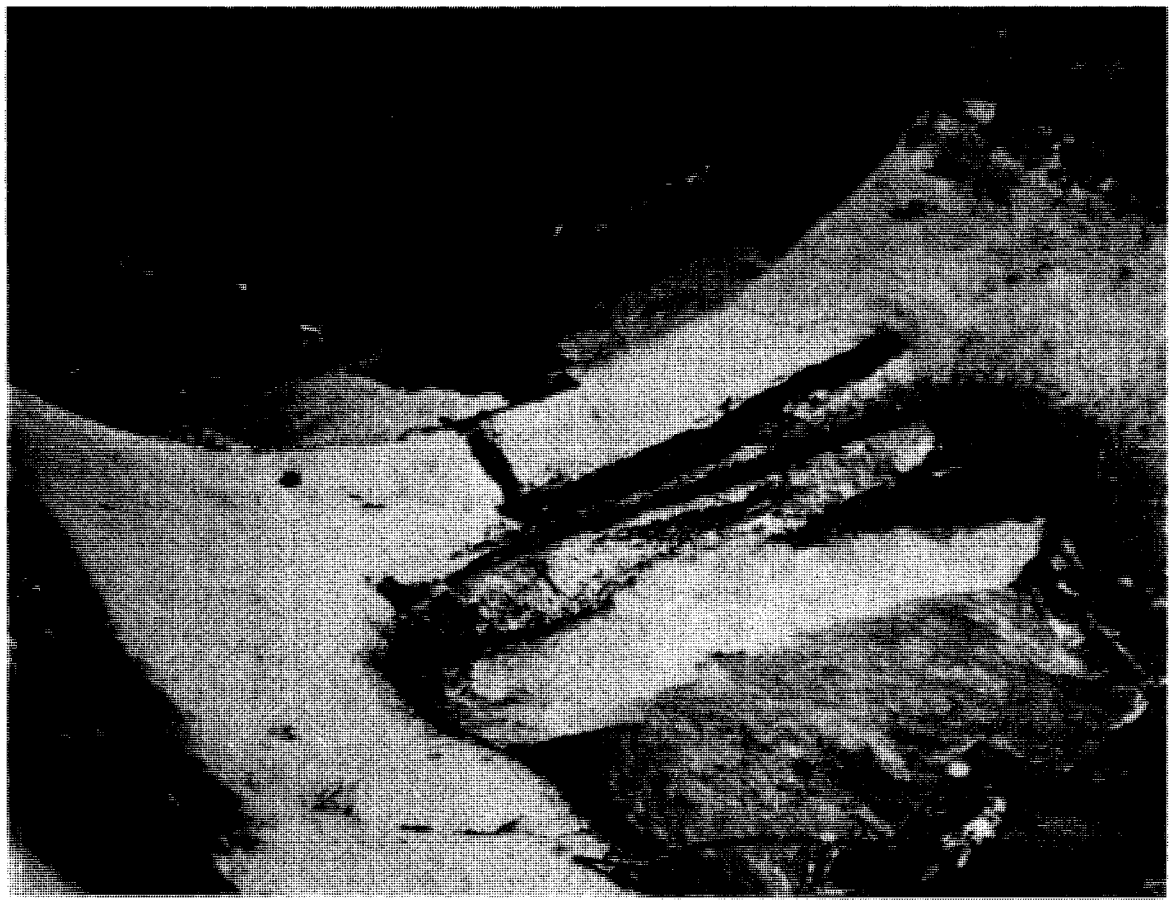

Figure 22. Typical early type of regulator

Conventional Designs

Conventional regulators can be subdivided into three major groups: (1) static, (2) semiautomatic dynamic, and (3) automatic dynamic. The grouping reflects the general trend toward the increasing degree of control and sophistication and, of course, the capital and operation and maintenance costs. Conventional regulator design, use, advantages, and disadvantages are well covered in the literature [10, 11, 32].

Static Regulators – Static regulators can be defined as fixed-position devices allowing little or no adjustment after construction.

Static regulators consist of horizontal or vertical fixed orifices, manually operated vertical gates, leaping and side-spill weirs and dams, and self-priming siphons. Typical static regulators are shown on Figure 23. With the exception of the vertical gate, which does not often move, they have no moving parts. Thus, they provide only minimal control, and they are least expensive to build, less costly to operate, and somewhat less troublesome to maintain. In view of the increasingly more stringent receiving water discharge limitations and the rising need of providing stormwater capacity in treatment plants, it is expected that the use of conventional static regulators will decline. System control, to utilize maximum capacity in the interceptor, requires flexibility virtually nonexistent with static regulators. Maintenance, with the exception of the vertical gate, is mostly limited to removal of debris blocking the regulator opening.

Semiautomatic Dynamic Regulators – Semiautomatic dynamic regulators can be defined as those which are adjustable over a limited range of diverted flow and contain moving parts but are not adaptable to remote control.

The family of semiautomatic dynamic (having moving parts) regulators consists of float-operated gates, mechanical tipping gates, and cylindrical gates. Typical semiautomatic dynamic regulators are shown on Figure 24. All require separate chambers to allow access for adjustment and maintenance. As a rule this group is more expensive to construct and to maintain than static regulators. They are more susceptible to malfunction from debris interfering with the moving parts and are subject to failure due to the corrosive environment. However, better flow control is provided because they respond automatically to combined sewer and interceptor flow variations. The adjustment of

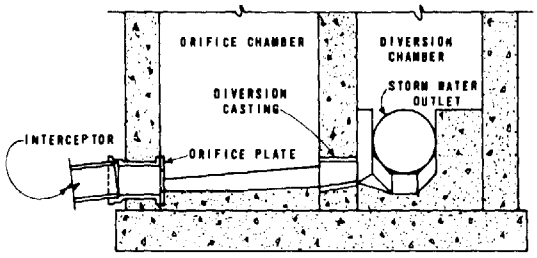

(a) FIXED-ORIFICE DIVERSION AND CONTROL STRUCTURE [32]

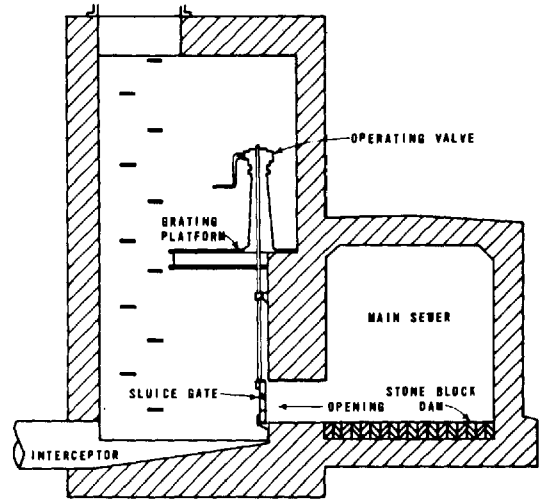

(b) TYPICAL MANUALLY OPERATED GATE REGULATOR PHILADELPHIA [11]

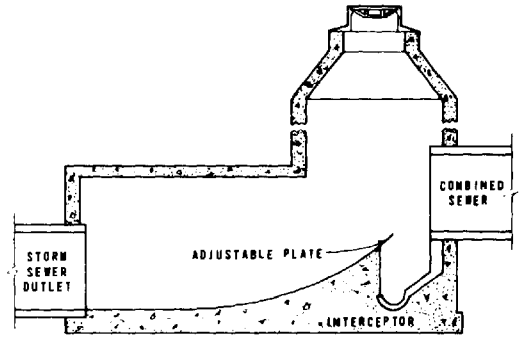

(c) ADJUSTABLE LEAPING WEIR AT SEATTLE, WASH. [32]

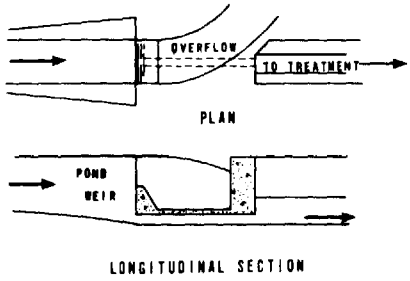

(d) WEIR OVERFLOW STRUCTURE [32]

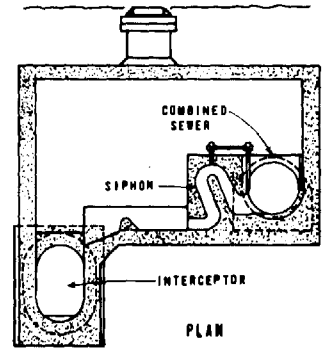

(e) SIPHON SPILLWAY [32]

Figure 23. Typical static sewer regulators

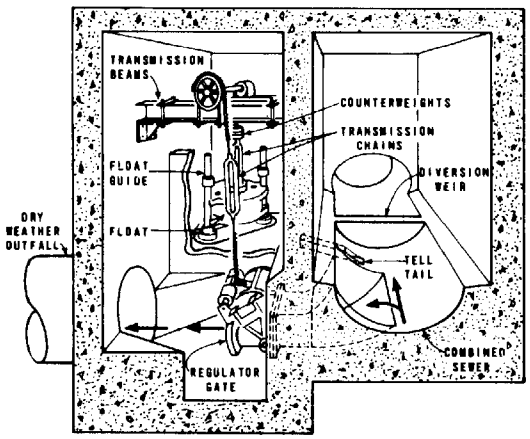

(a) AUTOMATIC SEWER REGULATOR [32]
(BROWN AND BROWN TYPE A).

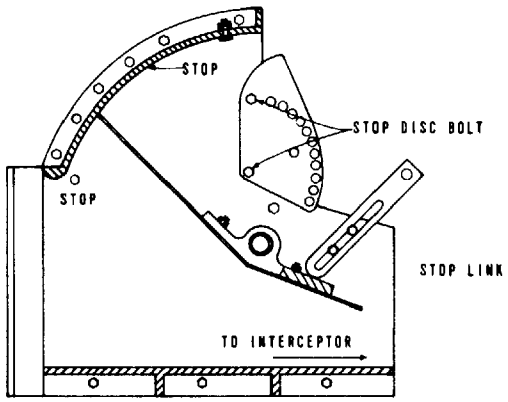

(b) TIPPING GATE REGULATOR [11]
USED BY ALLEGHENY COUNTY SEWAGE AUTHORITY

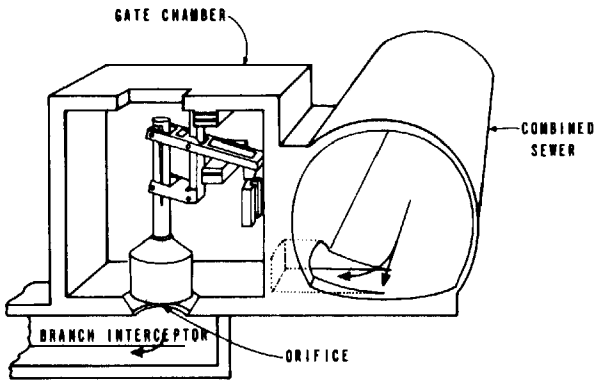

(c) CYLINDRICAL GATE REGULATOR [10]

Figure 24. Typical semiautomatic dynamic sewer regulators

these regulators is limited and strictly manual; thus, they are unadaptable for remote control.

The cylindrical gate is a relatively new device consisting of a horizontal circular orifice over which a cylindrical gate is hung. The gate is counterbalanced on an articulated frame. The rising water level in the gate chamber controls the closing of the orifice by the cylindrical gate without using floats or any external energy sources. These gates are suitable for flow ranges from less than 283 l/sec (10 cfs) to 5,660 l/sec (200 cfs) [10].

Automatic Dynamic Regulators – Automatic dynamic regulators consist of cylinder-operated (hydraulic or pneumatic) and motor-operated gates as shown on Figure 25. The distinction here from the preceding regulators is that these regulators are fully adjustable and are readily adaptable to remotely controlled operation. Because they are more sophisticated in design, they are more expensive to build and to maintain. Clogging is the major problem, as with all conventional regulators, along with corrosion and jamming.

Cylinder-operated gates – This regulator device consists of a weir perpendicular to flow constructed across the combined sewer invert, which diverts peak dry-weather flow through a vertical, fixed orifice with a variable opening to an interceptor. A cylinder-operated sluice gate varies the orifice opening. The cylinder-operator responds to an upstream or downstream level sensor (usually a float or air bubbler) or to remote signals that override the sensor. The amount of combined sewage diverted to the interceptor is controlled by the gate with the excess flow continuing on to the receiving waters. This type of regulator is economically used for automatic regulation for flows in excess of 113 l/sec (4 cfs). Such gates are considered very effective when operating correctly but they have been persistently subject to hydraulic malfunctions.

The cylinders may be operated by water, air, or oil pressure. The size of sluice gates operated by cylinders using water pressure is usually limited to 0.8 to 1.1 sq m (9 to 12 sq ft). Such cylinders operate at a minimum pressure of 1.8 kg/sq cm (25 psi) while the maximum pressure is limited by the city water pressure. Care must be taken to prevent cross connections with the city water supply by installing backflow prevention devices.

Preferred oil cylinder pressures of 53 kg/sq cm (750 psi) do not restrict the sluice gate size but do require a separate structure for housing the oil pumping equipment.

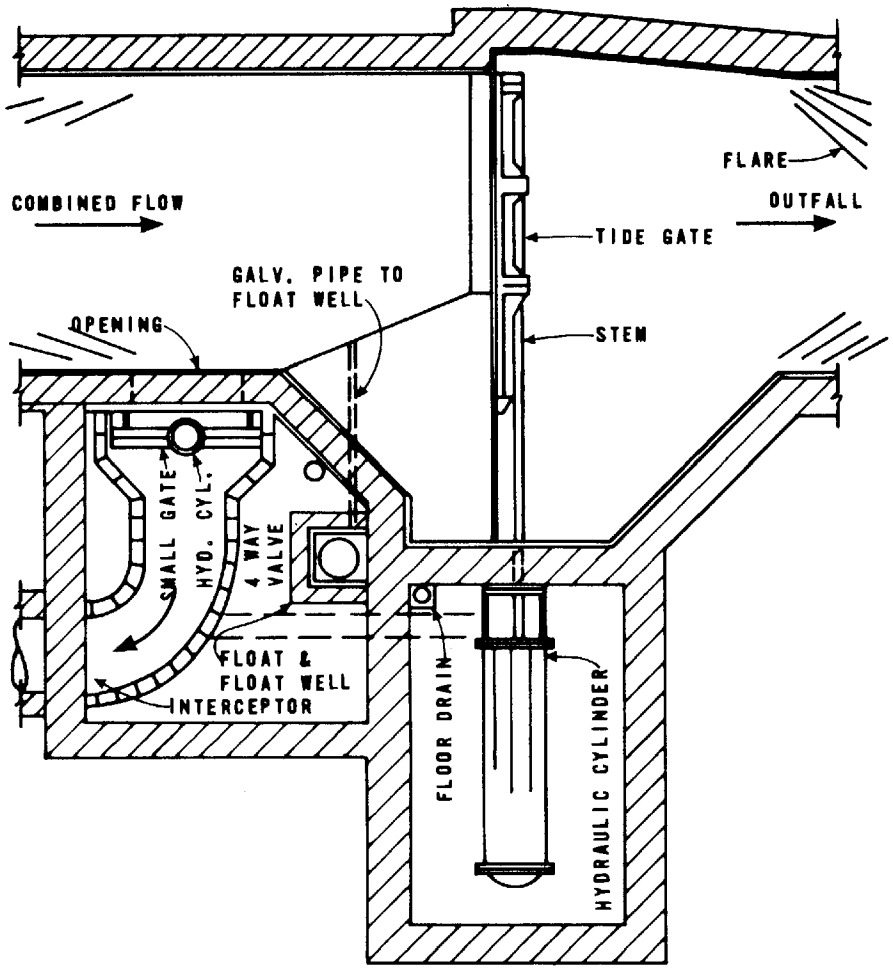

PLAN VIEW

CYLINDER - OPERATED GATE REGULATOR

PHILADELPHIA [11]

Figure 25. Typical automatic dynamic sewer regulator

Pressures of 6.3 to 14 kg/sq cm (90 to 200 psi) are generally used in air-actuated cylinders. These also require separate structures for air compressor equipment. In jurisdictions using both oil- and air-actuated cylinders, the oil type is preferred [10, 11].

Motor-operated gates – The application and operation of this type of regulator is similar to the cylinder-operated gate except that a motor is used in place of the cylinder. Special precautions and structures are required to protect the motor and other electrical equipment. Motor-operated regulators are not generally considered economical for flows less than 113 l/sec (4 cfs).

Improved Regulator Designs

Recent emphasis has resulted in the development of several new and innovative regulators both in the United States and in Europe [10]. Those showing the greatest promise are undergoing prototype testing. Regulators included in this group are fluidic devices, swirl concentrators, broad-crested inflatable fabric dams (see Section IX, Storage), and automatic slide gates and tide gates. Improved regulators developed in England include the vortex regulator, high side-spill weir, stilling pond regulator, and the spiral flow regulator. The spiral flow regulator is being developed for American practice.

Fluidic Regulator – Fluidic devices of two general types have applicability depending on the type of fluid flow interaction that takes place within them. These categories are (1) wall attachment and (2) vortex amplifier, of which the former forms the largest group [10, 11]. In the wall attachment devices, a high velocity jet emitted between two walls attaches itself to one wall, attracted there by a lower pressure area next to that wall caused by air entrainment at the opposite wall. A typical installation is shown on Figure 26. The City of Philadelphia, Pennsylvania, is now planning a full-scale demonstration of this type of fluidic regulator [19]. The vortex amplifier is in the development stage of small-scale modeling and as such is a long way from full-scale demonstration [39]. Flows in excess of the hydraulic design capacity cannot pass through these regulators and instead flow over the unit into the overflow channel.

Vortex Regulator – The vortex regulator (in England called a vortex overflow or rotary vortex overflow) consists of a circular channel in which rotary motion of the sewage

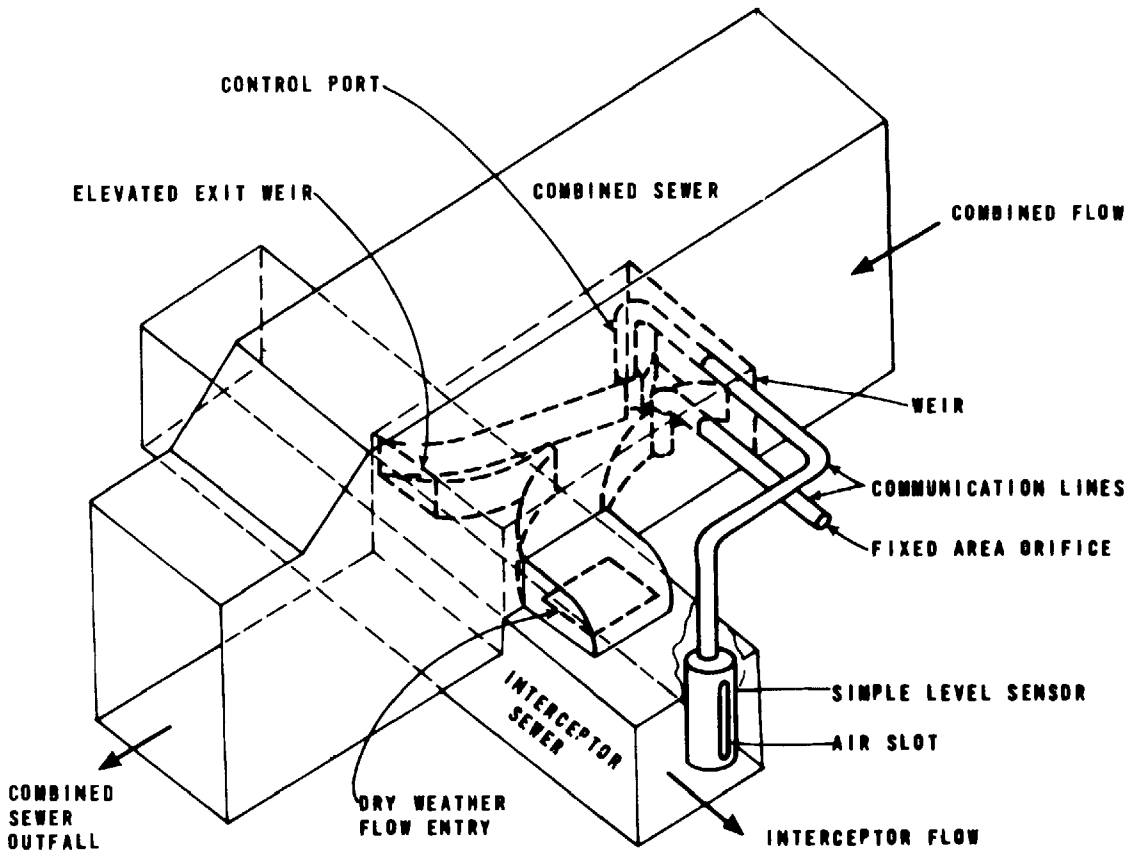

Figure 26. Schematic arrangement of a fluidic sewer regulator [10]

is induced by the kinetic energy of the sewage entering the tank (see Figure 27). Flow to the treatment plant is deflected, and discharges through a pipe at the bottom near the center of the channel. Excess flow in storm periods discharges over a circular weir around the center of the tank and is conveyed to receiving waters. The rotary motion causes the sewage to follow a long path through the channel thus setting up secondary flow patterns which create an interface between the fluid sludge mass and the clear liquid. The flow containing the concentrated solids is directed to the interceptor. Using synthetic sewage in model studies at Bristol, England, suspended solids removal efficiencies of up to 98 percent were reported [47]. Another series of experiments elsewhere on a model vortex regulator using raw sewage indicated poor performance in removing screenable solids under certain conditions [1]. This lack of overflow

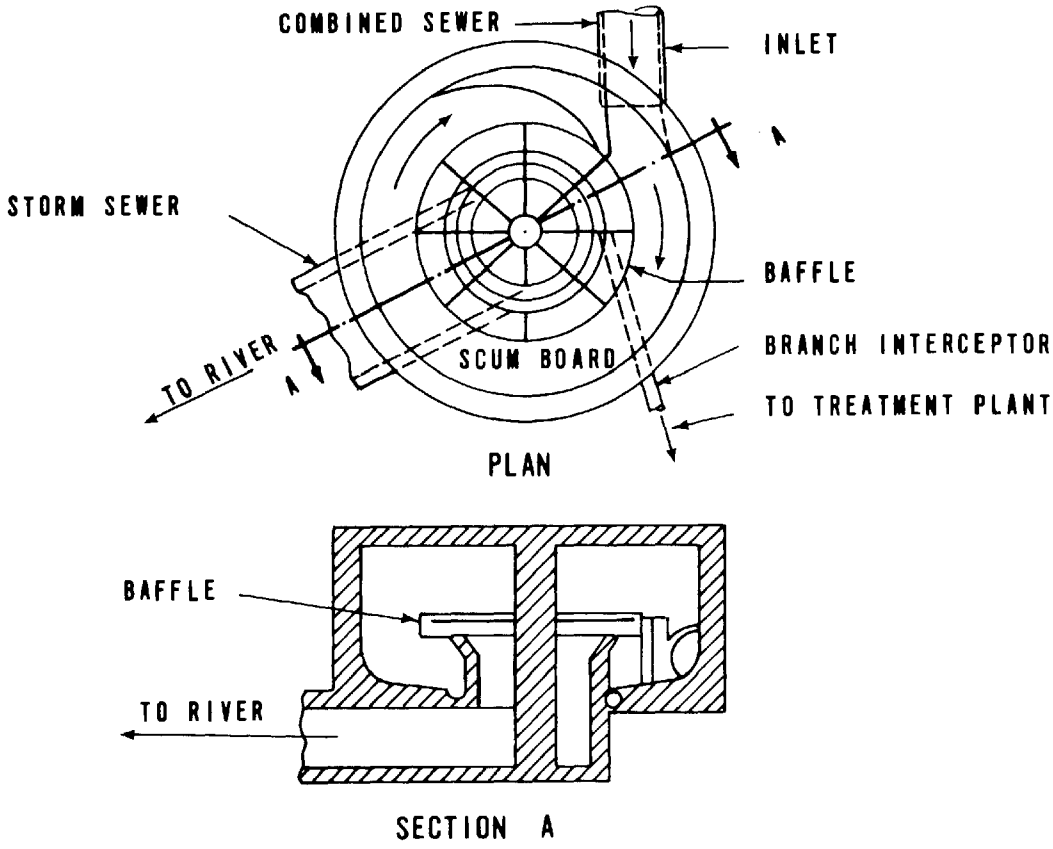

Figure 27. Vortex regulator [11]

quality enhancement was due to the free, unimpeded vortex flow field employed. It was later found that flow dampening by a deflector prevented solids being swept into the overflow by the violent vortex action.

Swirl Regulator/Concentrator – The swirl regulator/concentrator, after thorough hydraulic modeling, shows outstanding potential for providing both quality and quantity control. A full-scale installation is planned in Lancaster, Pennsylvania. The swirl regulator/concentrator is similar to, and is an outgrowth of, the vortex regulator. APWA studies, working with much larger flows in minimum-sized chambers showed that a vortex flow pattern must be avoided [50]. A different hydraulic condition is developed which enhances solids removals. Review of the literature points out that the main difference between the English vortex

regulator and the swirl regulator/concentrator is the flow field pattern. Another major difference is that larger flow rates can be handled in the prototype swirl regulator/concentrator (at Lancaster, Pennsylvania, the estimated increase is 4 to 6 times greater) than in the equivalent size vortex regulator.

A hydraulic laboratory model was used to determine geometric configuration and settleable solids removal efficiencies. Figure 28 shows the hydraulic model in action. Note the solids separation and concentration toward the underflow pipe to the treatment plant.

As a result of both mathematical and hydraulic modeling, the performance of the prototype has been predicted. Based upon a peak storm flow to peak dry-weather flow ratio of 55 to 1, 90 percent of the solids (grit particles with a specific gravity of 2.65, having a diameter greater than 0.3 mm and settleable solids with a specific gravity of 1.2, having a diameter larger than 1.0 mm) are concentrated into 3 percent of the flow [50, 15]. Hydraulic testing indicates that removal efficiency increases as the peak storm flow to peak dry-weather flow decreases. The recommended configuration for the swirl regulator/concentrator is shown on Figure 29.

The foul-sewer channel in the bottom of the swirl concentrator is sized for peak dry-weather flow. During wet-weather flows the concentrated settleable solids are carried out the foul-sewer into an interceptor.

There are no moving parts so maintenance and adjustment requirements are minimal. Fine tuning control is provided via a separate chamber with a cylinder gate on the "foul sewer" outlet to the interceptor. Remote control, although not readily adaptable, could be accomplished by providing a larger-than-necessary foul sewer (also diminishes the chances of clogging) and throttling this line with a remotely controlled gate.

Spiral Flow Regulator – The spiral flow regulator is based on the concept of using the secondary helical motion imparted to fluids at bends in conduits to concentrate the settleable solids in the flow. A bend with a total angle between 60 and 90 degrees is employed. Hydraulic model studies of this device, carried out at the University of Surrey, England [44], indicated that this is a feasible

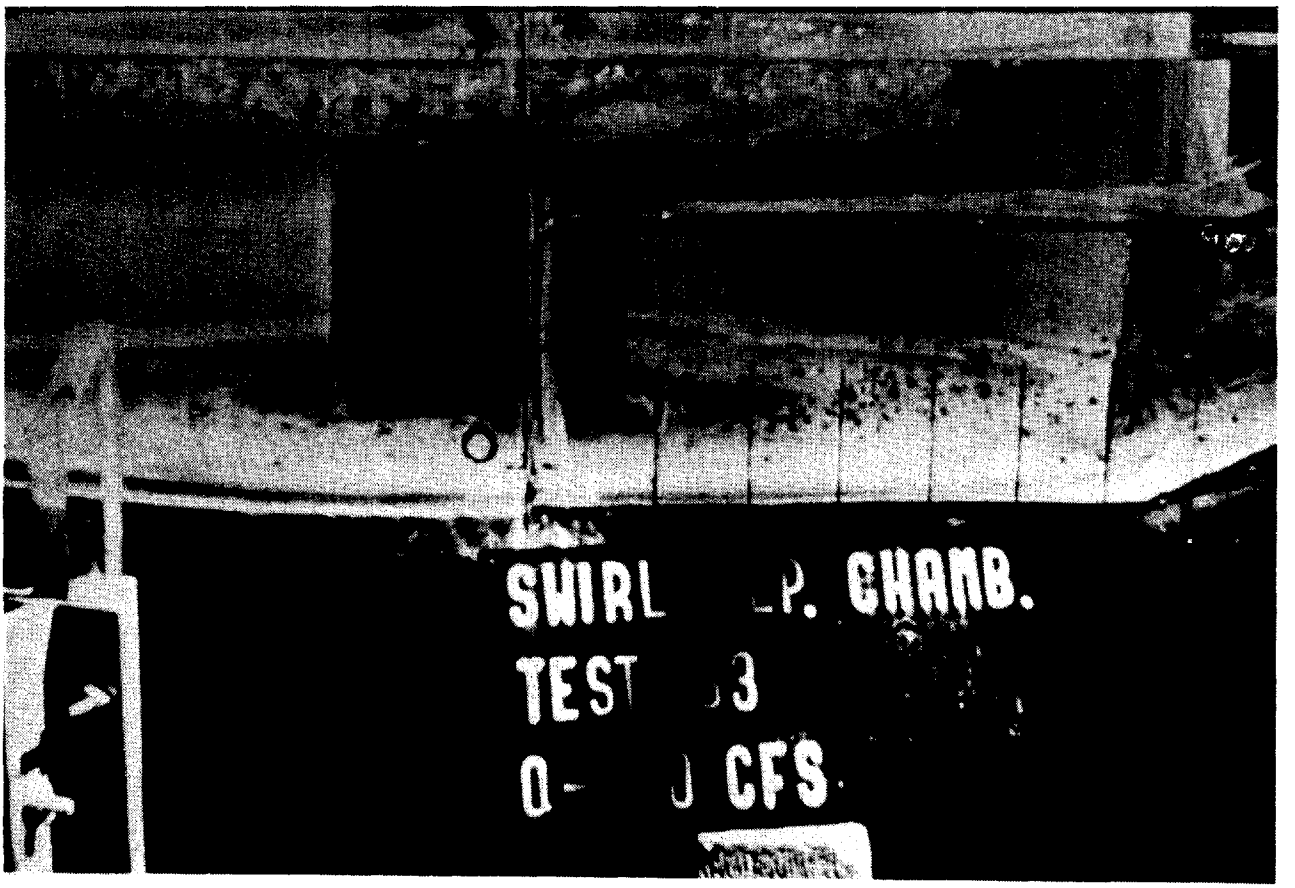

Figure 28. Solids separation action in the swirl concentrator hydraulic model

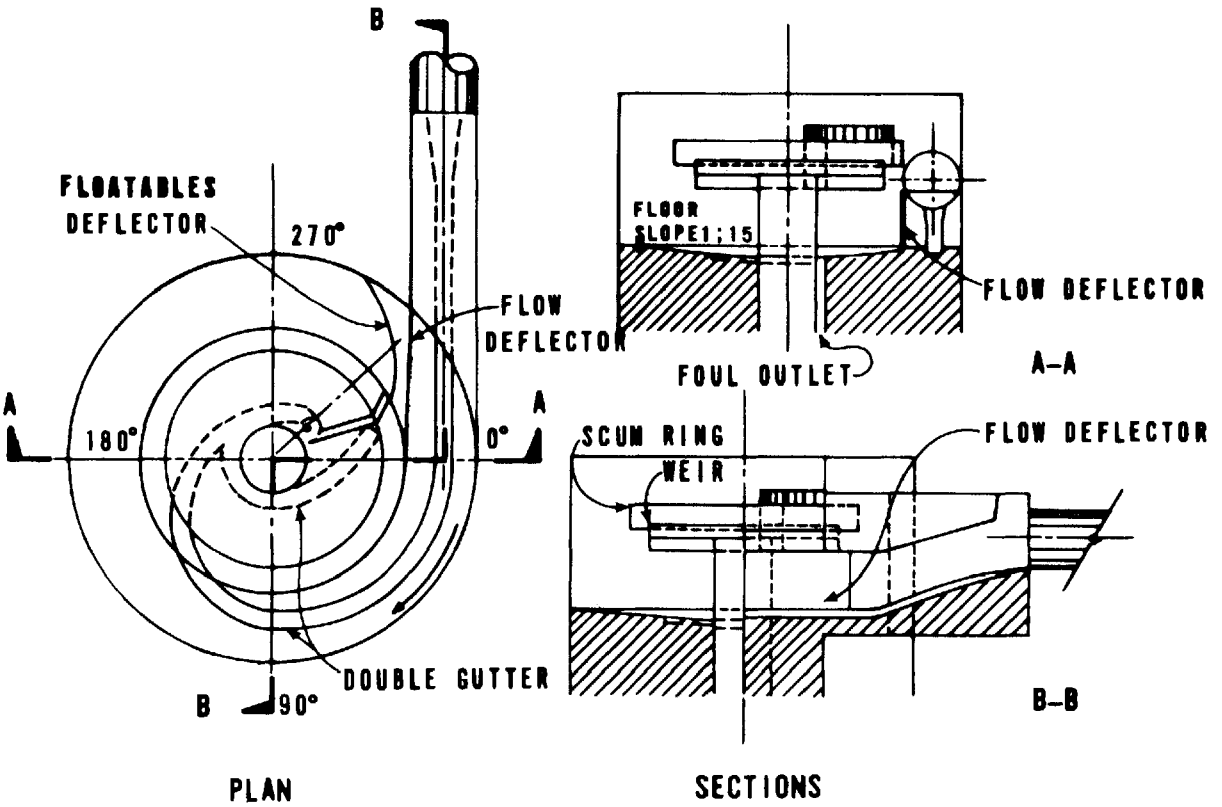

Figure 29. Recommended configuration for swirl concentrator [50]

means of separating solids from the overflow. The simplest form of the regulator is shown on Figure 30.

The heavily polluted sewage is drawn to the inner wall. It then passes to a semicircular channel situated at a lower level leading to the treatment plant. The proportion of the concentrated discharge will depend on the particular design. The overflow passes over a side weir for discharge to the receiving waters. Surface debris collects at the end of the chamber and passes over a short flume to join the sewer conveying the flow to the treatment plant.

The authors of the model study report that even the simplest application of the spiral flow separator will produce an inexpensive regulator that will be superior to many existing types. They also stated that further research is necessary to define the variables, the limits of applications, and the actual limitations of the spiral flow

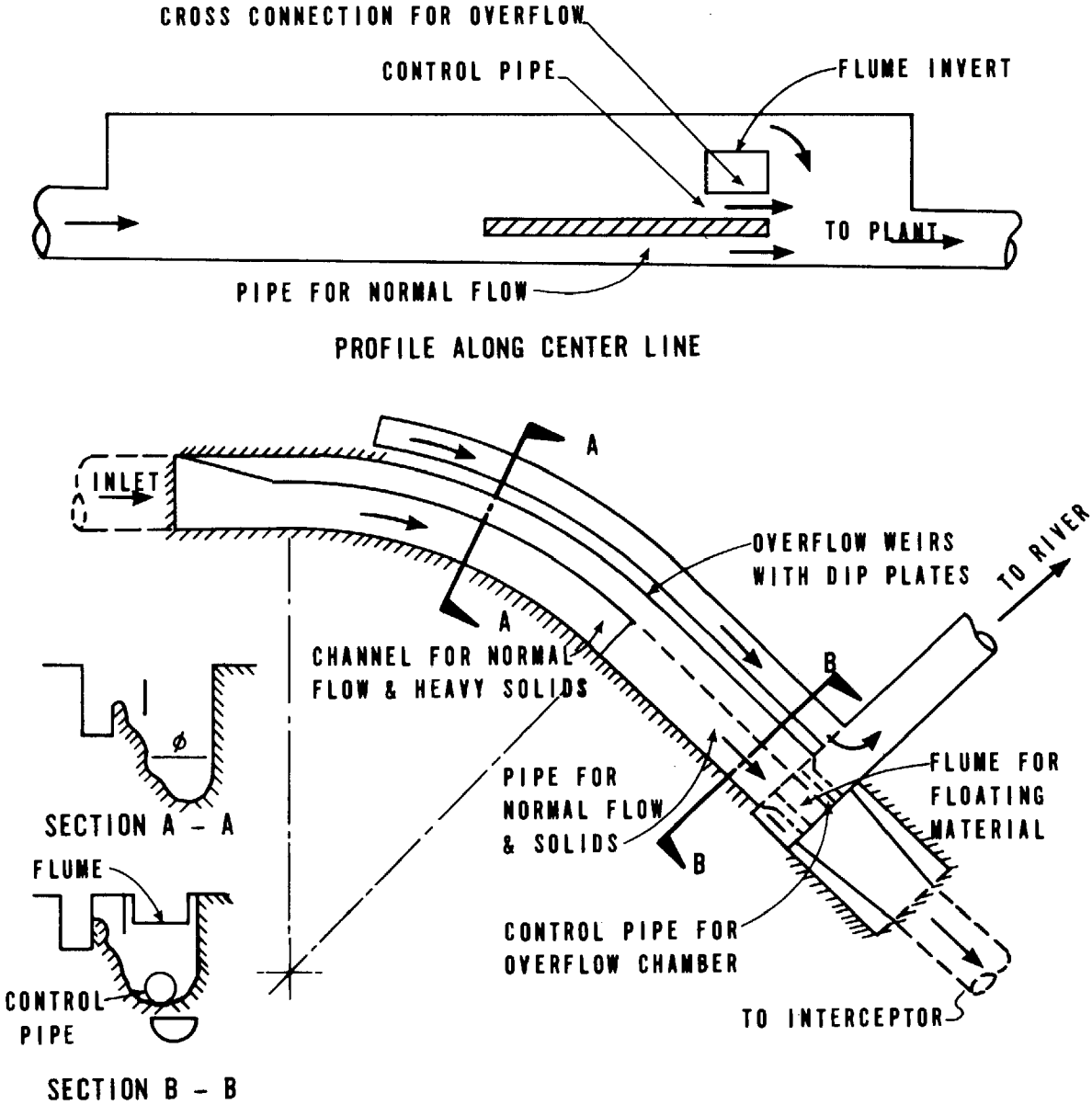

Figure 30. Spiral flow regulator adapted from [11]

regulator [44]. A prototype regulator has been successfully evaluated at Nantwich, England. A third generation device is being developed for American practice.

Stilling Pond Regulator – The stilling pond regulator, as used in England, is a short length of widened channel from which the settled solids are discharged to the interceptor [1]. Flow to the interceptor is controlled by the discharge pipe which is sized so that it will be surcharged during wet-weather flows. Its discharge will depend on the sewage level in the regulator. Excess flows during storms discharge over a transverse weir and are conveyed to the receiving waters. The use of the stilling pond may provide time for the solids to settle out when the first flush of stormwater arrives at the regulator and before discharge over the weir begins.

This type of regulator is considered suitable for overflows up to 85 l/sec (30 cfs). If the stilling pond is to be successful in separating solids, it is suggested that not less than a 3-minute retention be provided at the maximum rate of flow [34].

High Side-Spill Weirs – Unsatisfactory experience with side-spill weirs in England has led to the development of a high side-spill weir, referred to there as the high double side-weir overflow. These weirs are made shorter and higher than would be required for the normal side-spill weir. The rate of flow to the treatment plant may be controlled by use of a throttle pipe or a float-controlled mechanical gate.

The ratio of screenings in the overflow to screenings in the sewage passed on to treatment was 0.5, the lowest of the four types investigated in England. This device has the best general performance when compared to the English vortex and stilling pond regulators and the low side-overflow weir [1].

Tide Gates – Tide gates, backwater gates, or flap gates are used to protect the interceptors and collector sewers from high water levels in receiving waters and are considered a regulating appurtenance when used for this purpose.

Tide gates are intended to open and permit discharge at the outfall when the flow line in the sewer system regulator chamber produces a small differential head on the upstream face of the gate. Some types of gates are sufficiently heavy to close automatically, ahead of any water level rise in the receiving body. With careful installation and balancing, coupled with an effective preventive maintenance program, the ability of the gate to open during overflow

periods is not impaired because of the additional weight. Tide gates should be checked regularly to be sure that the hinge arms, pivot points, and seats are in good condition. The gates should also be free of trash, timber, or other obstructions which lock the shutter in the partly open position, allowing inflow.

Tide gates are available in a wide variety of sizes. They may be rectangular, square, or circular in shape depending on the requirement.

Electrode Potential – Another possible form of automatic regulation is to make use of electrode potential measurements of the combined or storm sewer overflows and to modulate the discharge accordingly. Studies made on predominantly stale domestic sewage in the laboratory showed, upon analysis of experimental results, a high degree of correlation between the electrode potential of the sewage and its strength. Linear correlation coefficients between electrode potential and the various sewage parameters measured were found to be as follows [43]:

Parameter	Linear correlation coefficient
BOD_5	0.873
COD	0.852
Sulfides	0.896
Total phosphorus	0.893
Nitrates	0.807
Chlorides	0.225

It was demonstrated that the potential decreases as the sulfide concentration increases, except when a small amount of DO is present exerting an attenuating effect. Thus, the quality of combined sewer overflows could be controlled by monitoring the electrode potential and releasing only that flow which would not damage the oxygen balance in the receiving waters. Storm flows with quality below the satisfactory range would be shunted to storage until the potential rises to the acceptable range.

Evaluation and Selection

The process of selecting a regulator can no longer be based solely on economics. Of increasing importance is quality control of the overflow as well as quantity control, otherwise known as the "two Q's" concept.

> Regulators and their appurtenant facilities should be recognized as devices which have the dual responsibility of controlling both quantity and quality of overflow to receiving waters, in the interest of more effective pollution control. [50]

As mentioned previously, new regulator devices have been developed that provide both quantity and quality control. These include electrode potential along with the swirl regulator/concentrator, spiral flow regulator, vortex regulator, and high side-spill weir. Thus, in the future, the choice of a regulator must be based on several factors including: (1) quantity control, (2) quality control, (3) economics, (4) reliability, (5) ease of maintenance, and (6) the desired mode of operation (automatic or semiautomatic).

Regulator Costs – Selected installed construction costs are shown in Table 29. These costs are to be used for order-of-magnitude reference only because of the wide variance of construction problems, unit sizes, location, number of units per installation, and special appurtenances.

The cost of maintaining sewer regulators as reported in a recent national survey also vary widely [10]. In most cases, the reported expenditures are probably not adequate to maintain the regulators in completely satisfactory condition. The annual cost per regulator required to conduct a minimal maintenance program is listed in Table 29.

REMOTE MONITORING AND CONTROL

One alternative to the tremendous cost and disruption caused by sewer separation is to upgrade existing combined sewer systems by installing effective regulators, level sensors, tide gates, rain gage networks, sewage and receiving water quality monitors, overflow detectors, and flowmeters and then apply computerized collection system control. Such system controls are being developed and applied in several U.S. cities. The concepts of control systems have been introduced in Section VI. As applied to collection system control, they are intended to assist a dispatcher (supervisor) in *routing and storing combined sewer flows to make the most effective use of interceptor and line capacities.* As the components become more advanced and operating experience grows, system control offers the key to total integrated system management and optimization.

Table 29. INSTALLED CONSTRUCTION COSTS AND ANNUAL OPERATION AND MAINTENANCE COSTS OF REGULATORS[a]

Type of regulator	Installed construction cost, $	Annual cost per regulator, $
Broad-crested inflatable fabric dam [45, 37]	4,200-7,200	1,500
Cylinder operated gate [30, 11, 10]	13,000-590,000	1,600-1,800
Cylindrical gate [11]	44,000-166,000	NA[b]
Float operated gate [11, 10]	140,000-260,000	1,500-1,600
Fluidic device [14]	33,000-83,000	NA
High side-spill weir	NA	NA
Horizontal fixed orifice (drop inlets) [11, 10]	1,800-3,600	1,600-2,100
Internal self-priming siphon [10]	NA	800-1,100
Leaping weir [11, 10]	2,800-33,000	1,000-1,200
Manually operated vertical gate [11, 10]	8,500-282,000	1,200-1,500
Motor operated gate [30, 11]	72,000-446,000	NA
Polymer injection [40, 36]	12,900-146,000	NA
Side-spill weir [11, 10]	1,100-25,000	600-700
Spiral flow separator	NA	NA
Stilling pond	NA	NA
Swirl concentrator [38]	124,000	NA
Tipping gate [11, 10]	49,000-418,000	1,500-1,800
Vertical fixed orifice [11, 10]	17,000-37,000	800-1,100
Vortex	NA	NA

a. ENR = 2000.

b. NA = not available.

System Components and Operations

The components of a remote monitoring and control system can be classified as either intelligence, central processing, or control.

The intelligence system is used to sense and report the minute-to-minute system status and raw data for predictions. Examples include flow levels, quantities, and (in some cases) characteristics at significant locations throughout the system; current treatment rates, pumping rates, and gate (regulator) positions; rainfall intensities; tide levels; and receiving water quality.

Quality observations and comparisons may assist in determining where *necessary* overflows can be discharged with the least impact. The central processing system is used to compile, record, and display the data. Also, on the basis of prerecorded data and programming, the processer (computer) may convert, for example, flow levels and gate positions into estimates of volumes in storage, overflowing, and intercepted and may compute and display remaining available capacities to store, intercept, treat, or bypass additional flows.

The control system provides the means of manipulating the system to maximum advantage. The devices include remotely operated gates, valves, inflatable dams, regulators, and pumps. Reactions to actuated controls and changed conditions (i.e., increased rainfall, pump failure, and blocked gate), of course, are sensed by the intelligence system, thus reinitiating the cycle.

Representative elements of a typical system are shown on Figure 31.

Because of the frequency and repetitiveness of the sensing and the short time span for decision-making, computers must form the basis of the control system. The complexity of the hydrology and hydraulics of combined systems also dictates the need for extensive preprogramming to determine cause-effect relationships accurately and to assist in evaluating alternative courses of action. To be most effective, real-time operational control must be a part of an overall management scheme included in what is sometimes called a "systems approach."

System Control

Before storm flow collection system control can be implemented, the direction, intensity, and duration of the storm

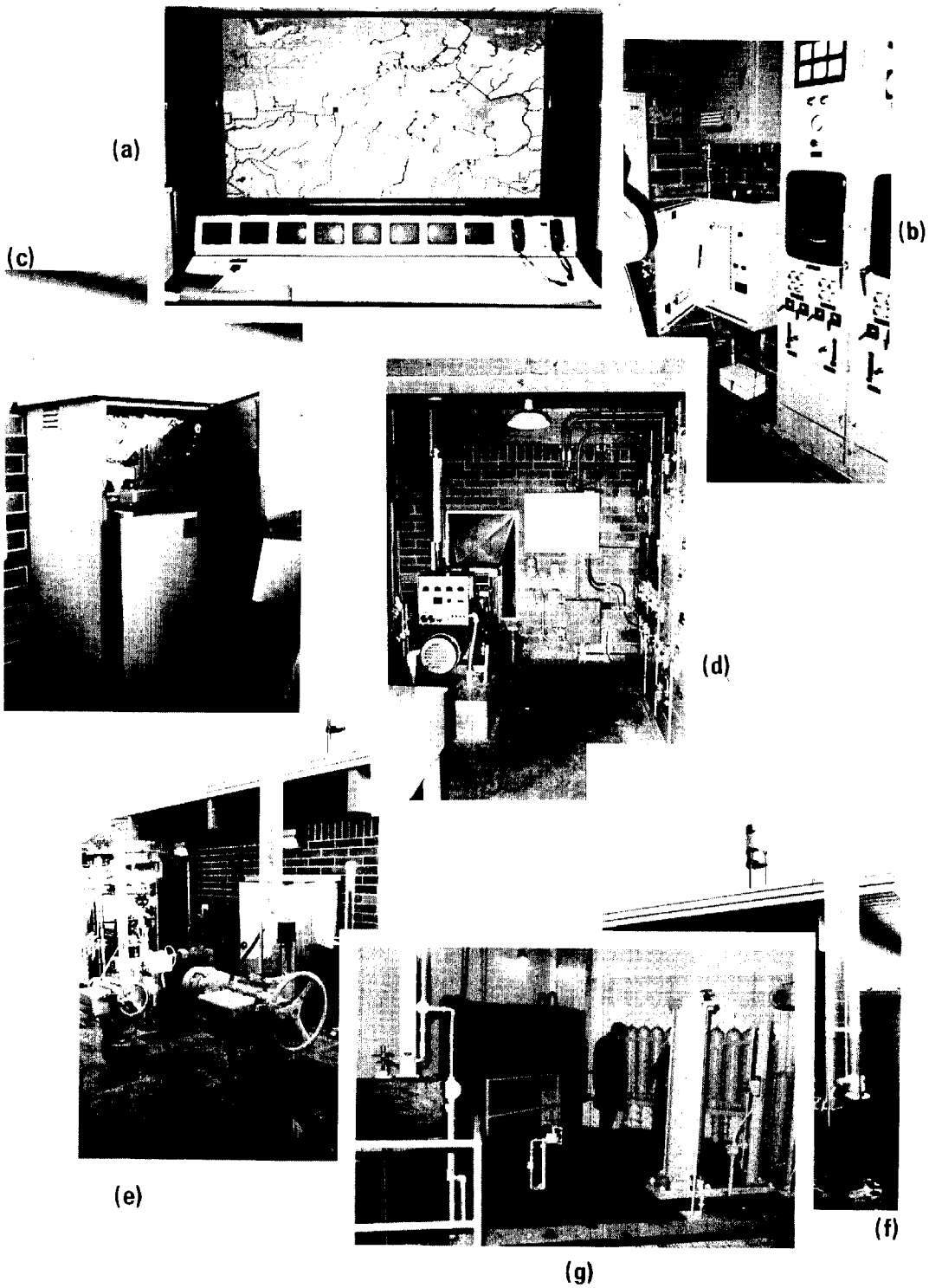

Figure 31. Elements of a remote control system (Seattle)

(a) Central control and status board (b) Telemetry signal transmitter (c) Automated sewage sampler (d) Emergency power generator (e) Motor-operators for regulator gates (f) Tipping-bucket rain gage at remote regulator station (g) Pneumatic cylinder operator for regulator gate

should be known so that runoff quantities may be anticipated. Thus, the rain gage network forms an integral part of the system. Once the storm starts affecting the collection system, the flow quantity and movements must be known for decision-making, control implementation, and checking out the system response. The advantages of knowing whether or not an overflow is occurring are obvious, but consider the added advantage of knowing at the same time that the feeder line is only half full and/or that the interceptor/treatment works are operating at less than full capacity. By initiating controls, say closing a gate, the control supervisor can force the feeder line to store flows until its capacity is approached, or can increase diversion to the interceptor, or both. If he guesses wrong, the next system scan affords him the opportunity to revise his strategy accordingly.

Thus, system control or management converts the combined sewer system from an essentially static system to a dynamic system where the elements can be manipulated or operated as changing conditions dictate.

The degree of automatic control or computer intelligence level varies among the different cities. For example, in Cincinnati, monitoring to detect unusual or unnecessary overflows is applied and has been evaluated as being successful [5]. In Minneapolis-St. Paul, the Metropolitan Sewer Board is utilizing a central computer that receives telemetered data from rain gages, river level monitors, sewer flow and level sensors, and mechanical gate diversion points to assist a dispatcher in routing stormwater flows to make effective use of in-line sewer storage capacity [2]. The use of rain gages, level sensors, overflow detectors, and a central computer to control pump stations and selected regulating gates is underway in Detroit [3]. The Municipality of Metropolitan Seattle (METRO) is incorporating the main features of the above projects plus additional water quality monitoring functions [30]. The City and County of San Francisco have embarked on the initial phase of a system control project for which the ultimate goal is complete hands-off computerized automatic control. They are currently collecting data on rainfall and combined sewer flows to aid in the formulation of a system control scheme. More details of the San Francisco system are described in Section XIII under Master Plan Examples. The main difference between the San Francisco and Seattle projects, besides size, is hands-off versus hands-on automatic supervisory control [16].

As an example of a complex "systems approach" to collection system control, various aspects of the Seattle master plan are discussed in detail below.

Detailed Example

The METRO approach to collection system control in Seattle, known as the Computer Augmented Treatment and Disposal (CATAD) system, is a computer-directed system for maximum utilization of available storage in the trunk and interceptor sewers to reduce or completely eliminate combined sewer overflows. The objectives and background of this program are discussed in Section XIII under Master Plan Examples.

Background Data Collection – To develop the computer control program necessary to meet the objectives of the CATAD system, environmental background data were necessary to establish the baseline conditions. Toward this end, two major studies were undertaken dealing with weather analysis and water quality analysis.

Weather analysis – A series of weather analyses were begun in late 1969 to determine what types of meteorological quantities would provide the best information for predicting storm intensities and actual wet-weather flows in the combined sewer system. The study was divided into two main sections. The first was based on precipitation data only. The second section considered wind speed and direction data in addition to precipitation.

The end conclusion was that the combination of wind direction and rain gaging from remote stations would provide advance information to enable the CATAD program to determine optimum flow regulation and storage levels within the sewage collection system.

Rather than duplicate much meteorological work being accomplished by the weather bureau, METRO reduced the weather-sensing portion of the CATAD program to the three following procedures:

1. Long-range precipitation forecasts would be entered into the computer program by obtaining the chance of rain prediction issued by the weather bureau at 6-hour intervals.

2. Medium-range rain gage data would be provided by rain gages at METRO stations located to the farthest north or south extent of the collection system. The first amount of rain detected by these gages would signal the immediate release of all stored sewage and draw down of those trunks and interceptors.

3. Short-term weather prediction would be obtained by rain gages located throughout the METRO drainage area.

Water quality studies – Since 1963, METRO has been engaged in a comprehensive water quality monitoring program throughout the entire metropolitan drainage area. Upon receipt of the CATAD demonstration grant in 1967, additional specialized water quality monitoring studies were added to the existing program to concentrate on certain areas that contribute to combined sewer overflows.

The objectives of the demonstration grant water quality studies were twofold. First, new water quality studies were begun or old programs modified to show how receiving water quality and other dynamic system parameters have changed during the periods of expansion, interception, regulation, and separation. Second, a base level for various parameters was to be established to be used as a tool for measuring the results of the CATAD demonstration project. The studies have been divided into two general areas related to the collection system itself and the receiving waters adjacent to the municipality. Weather and other pertinent environmental factors are correlated with data from the two main study categories.

Overflow sampling was divided into three categories: physical and chemical sampling, bacteriological sampling, and overflow volume computation.

Examples of a typical sewer sampling station and receiving water sampling and monitoring station are shown on Figure 15 (a, b, c).

System Operation – The CATAD system controls comprise a computer-based central facility for automatic control of remote regulator and pumping stations. The control center is located at the METRO office building with satellite terminals at the West Point and Renton treatment plants. The principal features of the control center include a computer, its associated peripheral equipment, an operators console, map display, and logging and events printers [23].

Remote monitoring and control units have been provided for 36 remote pumping and regulator stations. Twenty-four remote control units have been installed at pumping and regulator stations on the trunk and interceptor sewers leading to the West Point sewage treatment plant and nine remote control units have been installed at pumping stations along the interceptor sewers transporting primarily sanitary

sewage to the Renton treatment plant. One control unit of each collection system is located at the treatment plant influent pumping station. Three additional control units are to be installed at new pumping and regulator installations during the next several years.

Precipitation is monitored at six remote regulator stations strategically selected to be representative of the subbasins within the drainage area served by METRO. Precipitation data are telemetered to the central computer for processing along with other regulator station data. The items monitored at each regulator station, as shown in Table 30, include the sewage level in both the trunk and interceptor sewers, the maximum level set points in the trunk and interceptor, the tide level, the outfall and regulator gate positions, the overflow rate, the diversion rate to the interceptor, the trunk flow rate, the interceptor upstream flow rate, the stored flow, the interceptor downstream flow rate, the unused storage volume, and the explosion hazard. The items monitored at each pump station, as shown in Table 31, include the wet well liquid level, the liquid level set point, the station and force main discharge, the inflow rate, the explosion hazard, the storage rate, the unused storage, and the speed of each pump. Water quality parameters monitored in the receiving waters are temperature, conductivity, dissolved oxygen, pH, and solar radiation as shown in Table 32.

Regulators and pumping stations may be operated under three modes of control [23]:

1. Local Automatic Control. Each station is operated independently by controllers within the station in response to signals from local sensing devices.

2. Remote Supervisory Control. Stations are remotely controlled by operator-indicated commands from the central terminal via the CATAD system computer.

3. Remote Automatic Control. Stations are operated from the central terminal under program control by the CATAD system computer.

Since the trunk sewers are sized to carry storm flows, there is a large volume available for storage during dry-weather periods. The use of this storage capacity during storms is effected by controlling the quantity of flow diverted from combined trunks into the interceptor.

Table 30. TYPICAL CATAD REGULATOR STATION MONITORING HOURLY LOG

11/14/72 1000 W POINT SYS HOURLY LOG REGULATOR STATION

	TRKLVL INTLVL	TRKSET INTSET	TIDE	OUTPOS REGPOS	OVRFLO DIVFLO	TRKFLO UPSFLO	STOFLO DNSFLO	UNUSTO EXPHAZ
LOC DENNY RS								
	100.76			0.9	0.0	3.7	0.1	0.14
	0.00	96.56		100.9	3.6			
LUN DENNY RS								
	100.02	109.88	105.89	-0.2	0.0	10.6		
	94.73	96.56		100.5	10.6	32.6	47.0	
KING RS								
	105.23		105.34	-0.1	0.0	3.5	0.1	0.03
	97.70	102.40		99.3	3.4	1.4	4.9	-0.5
CONN RS								
	101.24	106.37	109.38	-0.2	0.0	3.1	0.0	0.31
	97.46	101.35		99.8	3.1	31.6	34.7	
LANDER RS								
	102.27	106.01	106.06	-0.1	0.0	6.3	0.0	0.57
	98.91	102.75		99.4	6.3	28.6	35.1	
2 HANFORD RS								
	100.97	105.23	104.81	0.0	0.0	6.4	0.7	2.15
	98.81	102.75		100.0	5.7	20.8	26.6	
BRANDON RS								
	102.37	105.93	105.59	-0.1	0.0	0.0		
	98.96	100.40		102.9	0.0	14.0	14.0	
MICHIGAN RS								
	101.50	105.69	105.35	-0.4	0.0	0.0		
	100.30	101.65		102.9	0.0	12.0	12.0	
CHELAN RS								
	101.56	107.98	105.61	0.1	0.0	4.4		
	100.53	103.21		100.3	4.4		2.7	
HARBOR RS								
	108.38		106.09	-0.2	0.0	0.9		
	108.08	109.13		99.5	0.9		0.9	
W MICH RS								
	116.46			0.0	0.0	0.7		
	107.41	108.37		99.9	0.7	3.1	3.8	
8TH SOUTH RS								
	100.49		105.76	0.3	0.0	2.8		
	98.12	99.58		100.4	2.8		2.2	
DEXTER RS								
	136.56	144.34			0.0	4.1	-0.1	1.09
	134.28	137.75		36.3	4.2		4.2	-3.6
L CITY RS								
	150.36	157.06			0.0	13.4		
	114.33			100.1	13.4		38.9	
1 HANFORD RS								
	101.61	108.05			0.0			
	95.40			-0.7				

Table 31. TYPICAL CATAD PUMP STATION MONITORING HOURLY LOG

11/14/72 1000 W POINT SYS HOURLY LOG - PUMP STATION

	LEVEL	SETPNT	STADIS FMDIS	INFLOW EXPHAZ	STORAT UNUSTO	PUMP 1 PUMP 4	PUMP 2 PUMP 5	PUMP 3 PUMP 6
W POINT PS								
	100.53		103.0			151	0	0
						0		
INTERBAY PS								
	93.32	93.29	48.9			0	327	0
				0.6				48.9
DUWAMISH PS								
	90.92		18.0			201	0	0
				-0.4				
E MARG PS								
	94.31	94.29	11.2			0	355	
W MARG PS								
	94.30	93.77	4.5			0	0	487
30TH NE PS								
	118.83	119.05	2.2			490	0	0
				-1.1				3.4
BELVOIR PS								
	112.49	112.49	2.0			0	0	373
MATTHEWS PS								
	87.97	87.94	13.4			0	510	0
				-1.2				
KENMORE PS								
	92.41		2.1			0	0	826
								-702.7

Table 32. TYPICAL CATAD WATER QUALITY MONITORING HOURLY LOG

11/25/72 2100 WATER QUALITY HOURLY LOG

SURFACE BOTTOM	TEMP TEMP	C2400	C24000 C48000	D.O. D.O.	PH	S.R.I.
RENTON JUNC.	046.1	0120	00880	09.56	05.85	
E. MARGINAL	045.6	0386	00000	09.88	06.88	0.06
16TH AVE. S.	047.9	0000	22320	07.42	07.40	
	049.8		43360	06.98		
SPOKANE ST.	043.7	0000	24200	08.38	07.40	
	049.9		41160	07.48		
KENT	045.4	0095	00040	11.54	07.00	

The design of the METRO interceptor system provides a positive means for controlling these bypassed flows. A regulator station (Figure 32) at each major trunk sewer controls both the diversion of combined sewage into the interceptor and the overflow from the trunk (sewage in excess of the capacity of the interceptor). The volume of flow diverted to the interceptor is automatically controlled by modulating the regulator gate position in response to changes in the level of sewage in the interceptor. As the level in the interceptor rises above a preset maximum, the regulator gate closes to reduce the volume of diverted flow and maintain the preset level. Storm flow in excess of the diverted flow is stored in the trunk sewer and the level of the sewage in the trunk commences to rise. When the level rises above a preset maximum, the outfall gate will open automatically to discharge the excess storm flow and modulate to maintain the preset maximum level in the trunk.

Accomplishments — The most demonstrative method of pointing out accomplishments is to show the results of interception of an actual storm. Two days of CATAD printouts were obtained from METRO, one set for the storm flow that occurred on November 25, 1972, and the second set for the dry-weather flow on November 14, 1972. The dry-weather flow data were used to establish an approximate dry-weather flow base for comparison purposes. The particular regulator station analyzed is the Denny-Lake Union (identified as LUN DENNY RS in the CATAD printouts). A sample storm log is shown in Table 33. The data included in this log are the rainfall occurring and the maximum rainfall rate during the hour, the maximum overflow rate and the overflow volume occurring during the hour, and the total overflow volume from the start of the overflow. A 16-hour period from 0700 hours to 2300 hours was used for the comparison. From the data, hydrographs were generated which yielded a dry-weather flow volume of 140,540 cu m (37.13 mil gal.) and a wet-weather flow volume of 204,650 cu m (54.07 mil gal.). The potential overflow volume then is the difference between the two or 64,120 cu m (16.94 mil gal.). The amount of actual overflow from the station allowed by the CATAD system was 11,660 cu m (3.08 mil gal.). Thus the effective storm runoff containment for this particular storm and regulator station was approximately 82 percent.

Several improvements have been observed in Elliott Bay following the August 1970 interception and regulation of 12 major combined sewer overflows which are that reductions in coliform levels range from 63 to 98 percent and that monitoring indicates an improvement of between 2 and 3 mg/l of dissolved oxygen in the bay.

Table 33. TYPICAL CATAD STORM LOG

11/25/72	2100 STORM LOG FLTIME	RAINFL	MAXRAT	OVRMAX	OVRVOL	OVRTOT
LOC DENNY RS				0.0	0.00	0.02
				0.0	0.00	0.02
LUN DENNY RS						
		0.00	0.00	7.7	0.02	3.08
KING RS						
				0.0	0.00	0.02
E MARG PS						
		0.01	0.06			
MATTHEWS PS						
		0.01	0.06			
KENMORE PS						
		0.01	0.06			
RENTON PS						
		0.01	0.06			

Other improvements have been observed in the Duwamish River. The dissolved oxygen levels have increased nearly 200 percent from an average of 2.5 mg/l to 4.5 mg/l but the improvement cannot definitely be attributed to the major combined sewer overflow's interception until an additional summer's data can be compared. Improved trawl fish catches indicate larger populations of certain fish species, including English sole and Chinook salmon, in the lower portion of the river following interception. Decreases in the ammonia-nitrogen concentrations at certain stations along the river can be attributed to improved nitrification techniques being utilized at the Renton secondary treatment plant discharging into the river upstream of these stations.

Costs — The CATAD project cost was $3.1 million, of which $1.4 million was a demonstration grant from the EPA Storm and Combined Sewer Technology Program. These costs do not include regulators or pumping station costs. Computer monitoring and control to each station costs about $15,000. Construction costs for new regulators with motor-driven gates and local controls average $250,000. The CATAD operation costs about $200,000 per year including salaries, supplies, amortized capital expenses, and maintenance costs [17].

Section IX

STORAGE

Storage is, perhaps, the most cost effective method available for reducing pollution resulting from combined sewer overflows and to improve management of urban stormwater runoff. As such, it is the best documented abatement measure in present practice. Storage, with the resulting sedimentation that occurs, can also be thought of as a treatment process.

Storage facilities possess many of the favorable attributes desired in combined sewer overflow treatment: (1) they are basically simple in design and operation; (2) they respond without difficulty to intermittent and random storm behavior; (3) they are relatively unaffected by flow and quality changes; and (4) they are capable of providing flow equalization and, in the case of tunnels, transmission. Frequently they can be operated in concert with regional dry-weather flow treatment plants for benefits during both dry- and wet-weather conditions. Finally, storage facilities are relatively fail-safe and adapt well to stage construction. Drawbacks of such facilities are related primarily to their large size (real estate requirements), cost, and visual impact. Also, access to treatment plants or processes for dewatering, washdown, and solids disposal is required.

Storage facilities presently in operation have been sized on the basis of one or more of several possible criteria. The facilities should: (1) provide a specified detention time for runoff from a storm of a given duration or return frequency; (2) contain a given volume of runoff from the tributary area, such as the first 1.27 cm (1/2 inch) of runoff; (3) contain the runoff from a given volume of rain, such as the runoff from 1.27 cm (1/2 inch) of rain; or (4) contain a specified volume. Because storage facilities are generally designed to also function as sedimentation and/or disinfection tanks, a major advantage is the SS reduction of any overflows from the storage units. Particular

design concerns are flow handling, washdown and solids removal, and protection against odors and hazardous gases. Air can be used to resuspend the settled solids prior to dewatering and for odor and explosive gas control.

As with treatment systems, automated intelligence (data collection and analysis) and control can play a significant part in the management and optimal use of storage systems. The objective of the control system is to optimize the containment and treatment of combined sewer overflows with actions dependent upon the storm pattern, treatment and storage availability, and projected storm and system behavior. When overflows to receiving waters are necessary, quality monitoring coupled with system controls will permit the releases to occur in the least damaging manner. The smaller the storage volume available (in tunnels, sewers, and tanks) and the more variable the rainfall pattern, the more critical the monitoring and control system becomes.

TYPES OF STORAGE FACILITIES

Storage facilities may be constructed in-line or off-line; they may be open or closed; they may be constructed inland (upstream) or on the shoreline; they may have auxiliary functions, such as flood protection (sewer relief) and flow transmission; and they may be used for hazardous spill containment during dry weather.

In-Line

Because combined sewers are designed to carry maximum flows occurring, say, once in 5 years (50 to 100 times the average dry-weather flow), during most storms there will be considerable unused volume within the major conduits. In-line storage is provided by damming, gating, or otherwise restricting flow passage just downstream from the regulator diversions to create additional storage by backing up the water in these upstream lines. Essential to effective utilization of this concept are sewers with flat sewer grades in the vicinity of the interceptor, high interceptor capacity, and extensive control and monitoring networks. To be safe, the restriction must be easily and automatically removed from the flow stream when critical flow levels are approached or exceeded. Such systems have been successfully implemented in Seattle, Minneapolis-St. Paul, and Detroit [14, 7, 15]. In-line storage has been utilized in other processes by setting retention basin weirs sufficiently high to back flows into the trunk sewer system before overflows occur. This is done to ensure maximum utilization of both interceptor and treatment plant capacities.

Seattle, Washington – First operational in late 1971, the system presently has 10 fully equipped regulator stations. such as the one shown on Figure 32, with 3 more under design. All stations are monitored and are designed so that they may be operated by a supervisor from a central control console. Fully automated control will be attempted in 1973. The estimated maximum safe storage in the trunklines and interceptors is 121.1 Ml (32 mil gal.), or roughly equivalent to 0.13 cm (0.05 inches) of direct runoff from the combined sewer and partially separated sewer areas. Interceptor capacity is generally 3 times the estimated year 2000 dry-weather flow. Under supervisory operation, overflows have been reduced in volume by approximately 52 percent.

Minneapolis-St. Paul, Minnesota – This system, operational since April 1969, is quite similar to that in Seattle, except that inflatable Fabridams are used in place of the motor-operated outfall gates, as also shown on Figure 32. Fifteen Fabridams, operated by low pressure air, are located in the major trunks, which are 1.52 to 3.66 meters (5 to 12 feet) in diameter, immediately downstream of the regulator gates. Normally, they are kept in a fully inflated condition forming a dam to approximately mid-height of the conduits. When storm flows are sufficiently large so as to threaten to surcharge the trunk sewers, as indicated by the flow depth monitoring, the Fabridams may be deflated remotely from the control center. On the trunks where they are installed, the total overflow volume reduction has been estimated to range from 35 to 70 percent, depending on the nature of the storm event [7]. Based upon a comparison of pre- and post-project conditions, the number of overflows was reduced 58 percent (from 281 to 117) and the total overflow duration was reduced 88 percent (from 1,183 hours to 147 hours) from April 1969 to May 1970. A major accomplishment of the plan has been the almost total capture of the contaminated spring thaw runoff.

Detroit, Michigan – The Detroit Metropolitan Water Service (DMWS) has installed the nucleus of a sewer monitoring and remote control system for controlling combined sewer overflows from many small storms to the Detroit and Rouge rivers [1]. This system includes telemeter-connected rain gages, sewer level sensors, overflow detectors, a central computer, a central data logger, and a central operating console for pumping stations and selected regulating gates. The cost of the system was slightly over $2.7 million. This system has enabled DMWS to apply such pollution control techniques as storm flow anticipation, first flush interception, selective retention, and selective overflowing.

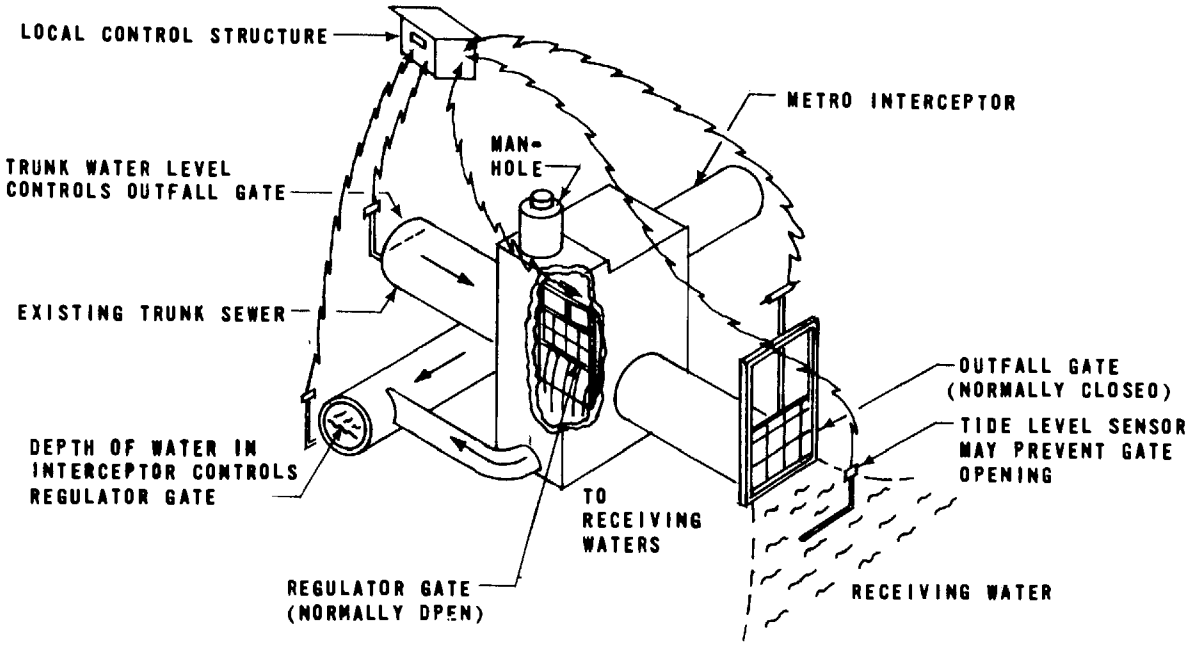

(a) SEATTLE, WASHINGTON [14]

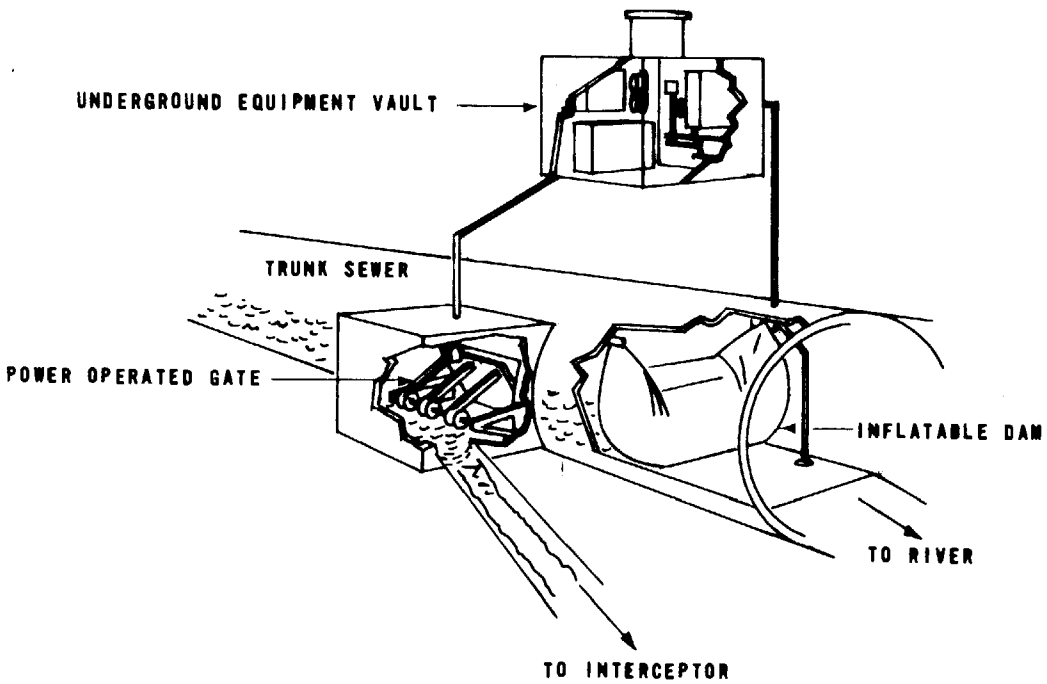

(b) MINNEAPOLIS-ST.PAUL, MINNESOTA [7]

Figure 32. Typical regulator stations of in-line storage systems

The operator, upon receiving advance information on storms from a remote rain gage, increases the treatment plant pumping rate. This lowers the surcharged interceptor gradient and allows for greater interceptor storage capacity and conveyance. This practice has enabled DMWS to contain and treat many intense spot storms entirely, in addition to many scattered citywide rains.

Off-Line

Typical off-line storage devices can range from lagoons [18], to huge primary settling tank-like structures [10, 2], to underground silos [8], to underwater bags [4], to void space storage, to deep tunnels [5], and mine labyrinths. In almost all cases, feedback of the retained flows to the sanitary system for ultimate disposal is proposed or practiced. The underground and offshore storage has been proposed to meet the severe land area and premium cost constraints.

Chippewa Falls, Wisconsin – A 36.45-ha (90-acre) combined sewer area of this Wisconsin community has been served by a 10.6-Ml (2.8-mil gal.) open storage lagoon since 1969 [18]. The storage volume is equivalent to 2.92 cm (1.15 inches) of runoff from the tributary area. A plan of the retention basin is shown on Figure 33. In the two-year period 1969-1970, the lagoon was 93.7 percent effective in capturing overflow volumes. During this period, the combined sewer overflows from 59 of 62 storms were totally contained by the basin. Flow storage in the basin up to 12 hours caused no adverse odor problems. The basin was paved with 5.08 cm (2 inches) of asphalt, and the most effective cleaning of solids was through the use of conventional street sweepers. The basin is dewatered to an existing activated sludge plant after storms with no adverse effect on the biological treatment process. Secondary clarifier capacity, however, had to be doubled to avoid excessive loss of solids during sustained high flows.

Akron, Ohio – An underground 2.7-Ml (0.7-mil gal.) capacity storage facility has been constructed in Akron, Ohio (see Figure 34), utilizing the concept of void space storage [17]. The basin is trapezoidal in cross section (3:1 side slopes) with top dimensions of 61 meters (200 feet) by 61 meters (200 feet) and a usable depth of 3.4 meters (11 feet). It serves a 76-ha (188.5 acre) combined sewered area. The rock fill material completely filling the basin in which the combined sewage is to be temporarily stored is washed gravel, graded from 6.3 to 8.9 cm (2-1/2 to 3-1/2 inches) in diameter. The effective void space is approximately 33 percent of the total volume. The fill is completely enclosed

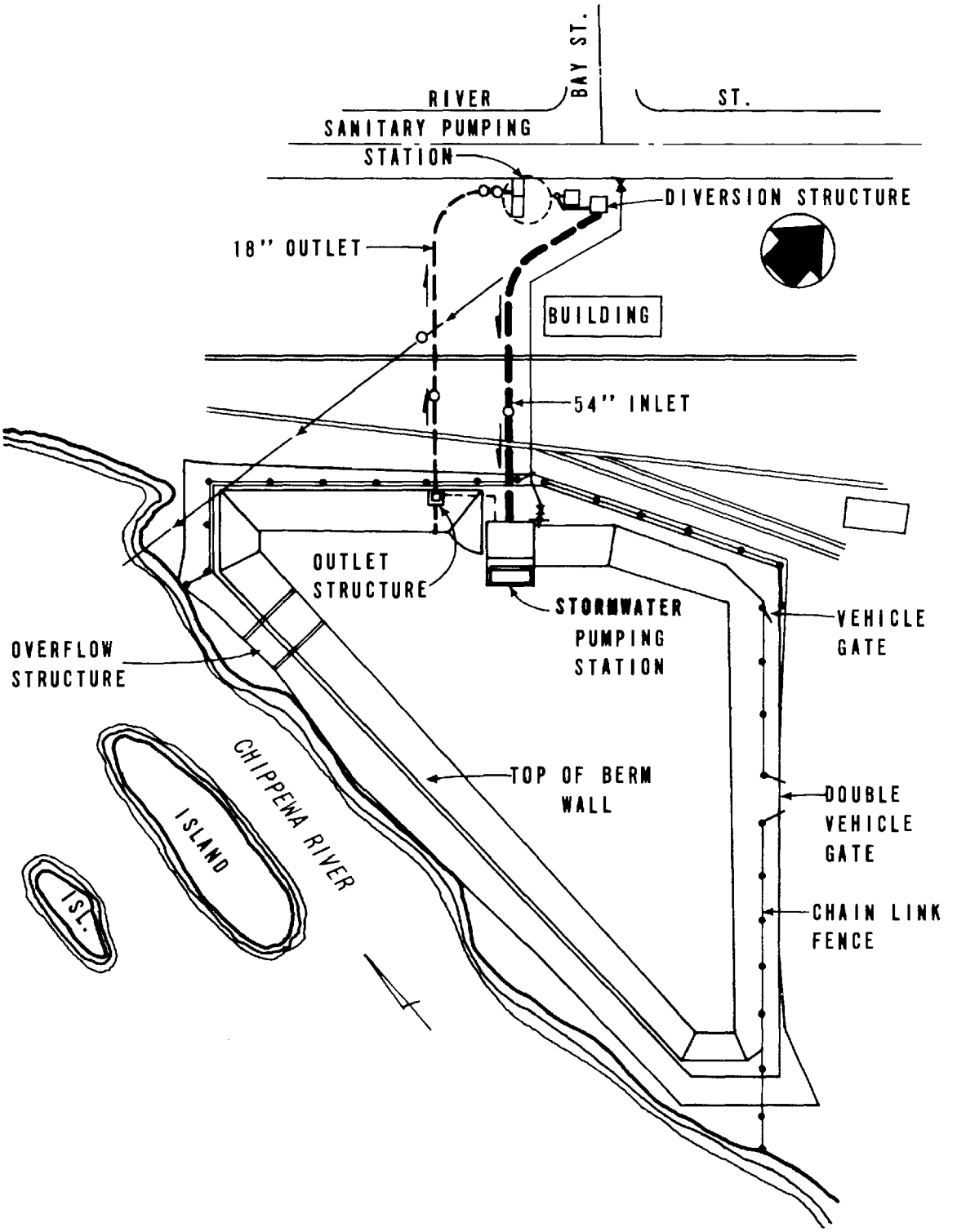

Figure 33. Detention basin plan
Chippewa Falls [18]

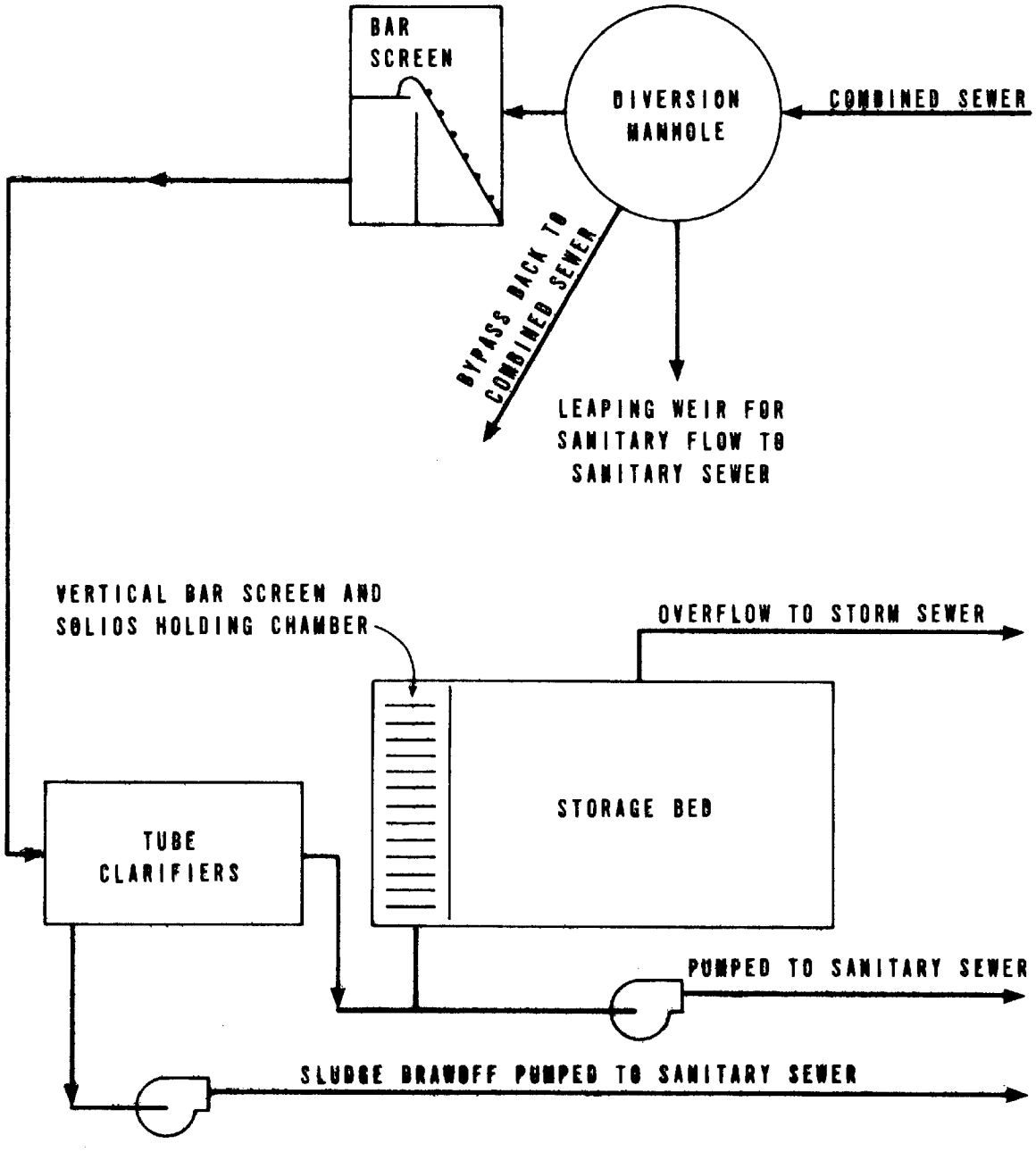

Figure 34. Schematic of detention facilities, Akron, Ohio [17]

in a watertight plastic liner (30 mil sheeting) and covered with 1 meter (3.28 feet) of earth.

Storm-flushed material flows from the combined sewer system into a clarification (roughing) chamber where it is chlorinated and a large percentage of the solids are removed. The chlorinated wastewater flows over a weir into the holding basin where it is stored until it can be transported to the treatment plant. The purpose of the rock fill is to save cost and to maintain the ground-level surface area available for other uses. The installation is expected to begin operating in late 1973. The system's susceptibility to clogging and its treatment efficiency will be evaluated.

Jamaica Bay, New York City, New York – This large, covered concrete storage basin, completed in 1972, intercepts combined overflows from a 1,318.7-ha (3,256-acre) service area. The total storage capacity of 87.1 Ml (23 mil gal., including 10 mil gal. in basins and 13 mil gal. through backup in the trunk system), is equivalent to 0.66 cm (0.26 inches) of direct runoff. The basin is designed to retain fully the runoff from up to 50 percent of the summer storm events, and to provide primary treatment and chlorination for larger storms (20 minutes detention minimum for intensities up to 1.3 cm/hr (0.50 in./hr) which covers 98 percent of all storm time). About three-fourths of the retained volume in the tanks and sewers are drained by gravity to a dry-weather flow treatment plant following each storm. The remaining volume and settled solids then are pumped to the treatment plant.

Appurtenances include traveling bridge hydraulic sludge collectors, mechanically cleaned bar racks, centrifugal type grit separators, and sodium hypochlorite storage and feed facilities. The unit is completely covered and has 6 parallel basins, each 15.25 meters wide by 145.2 meters long by 3.5 meters deep (50 feet by 476 feet by 11.5 feet), as shown on Figure 35. Forced air ventilation is provided to prevent odor problems and explosion hazards. Twenty overflows, all with the equivalent of primary treatment, are anticipated to occur on the average each summer season.

Humboldt Avenue, Milwaukee, Wisconsin – This single covered concrete storage tank, completed in 1969, serves a 230.9-ha (570-acre) section of the combined sewer portion of Milwaukee [3]. Its storage capacity of 15.1 Ml (4 mil gal.) is equivalent to the runoff from 1.27 cm (0.5 inch) of rainfall over the tributary area. However, it has been containing the runoff from 2.0 to 2.3 cm (0.8 to 0.9 inches) of rainfall. A schematic of the facility is shown on Figure 36. Photographs of the facility are shown on Figure 37.

(a)

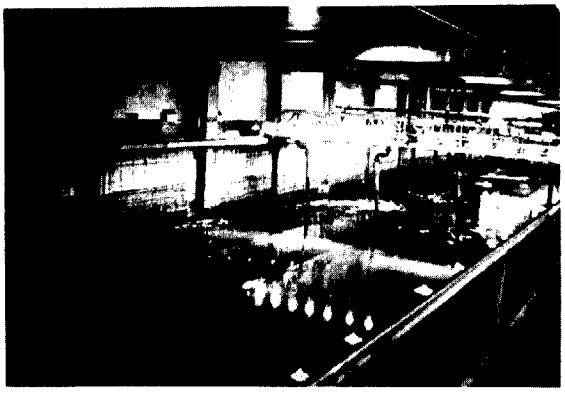

(b)

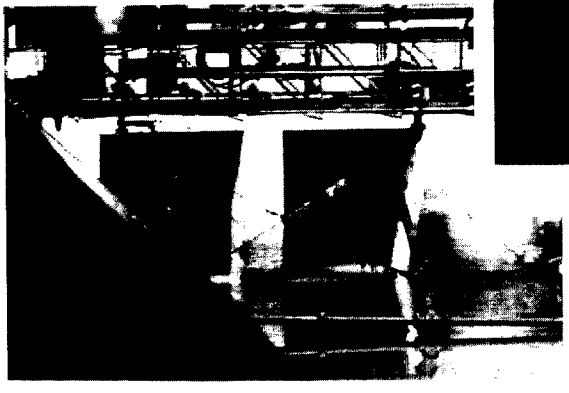

(c)

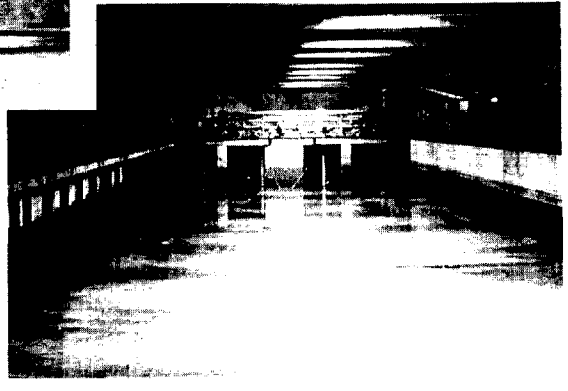

(d)

Figure 35. Jamaica Bay (Spring Creek auxiliary water pollution control plant) retention basin

(a) Exterior view of facility at discharge to receiving water (b) Traveling bridge collector with drop pipe assemblies (c) Closeup of bridge showing typical drop pipe and header for directing high pressure sprays on floor (d) One of six 50-ft wide bays, looking at inlet ports

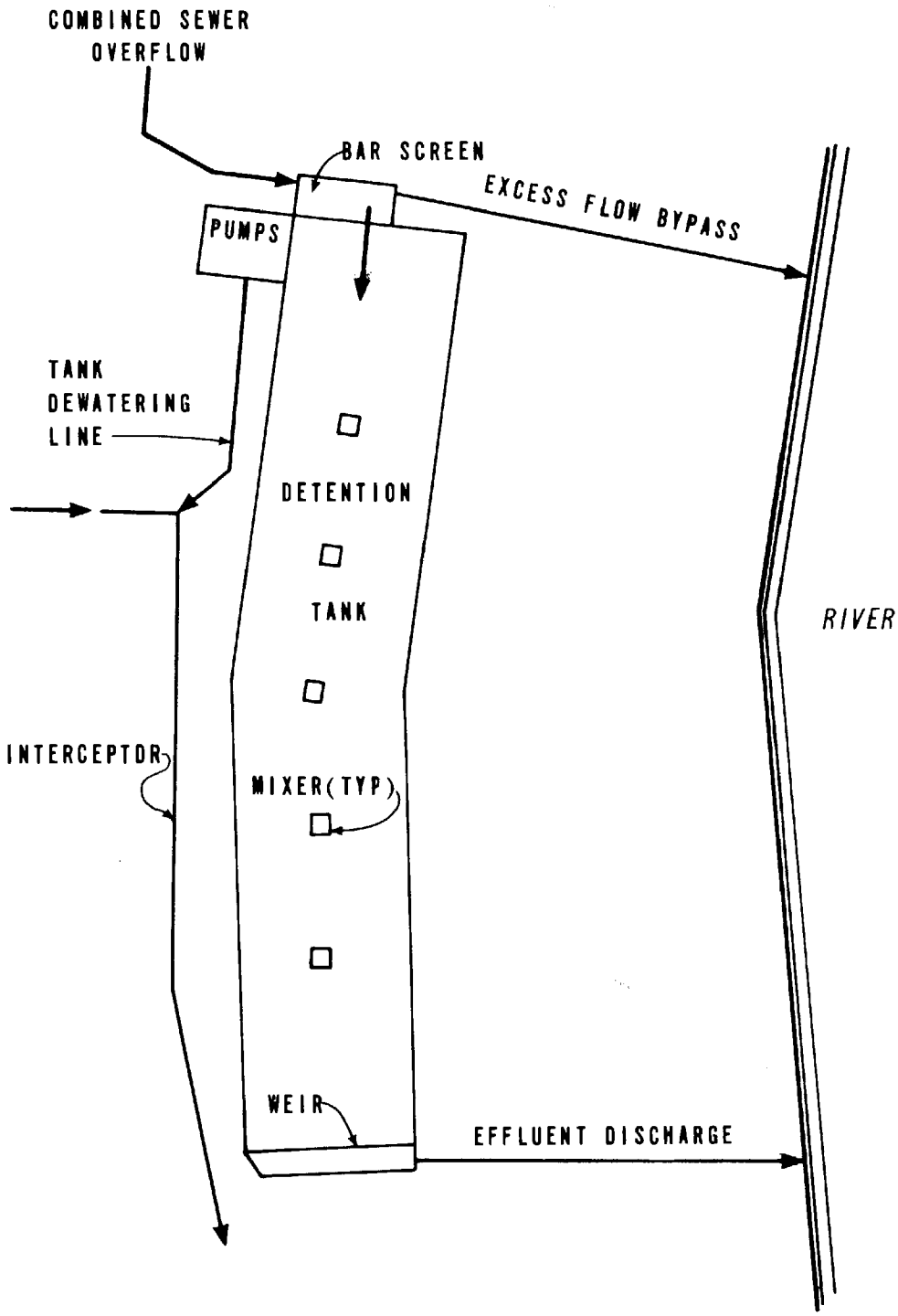

Figure 36. Schematic of Humboldt Avenue detention and chlorination facility, Milwaukee, Wisconsin

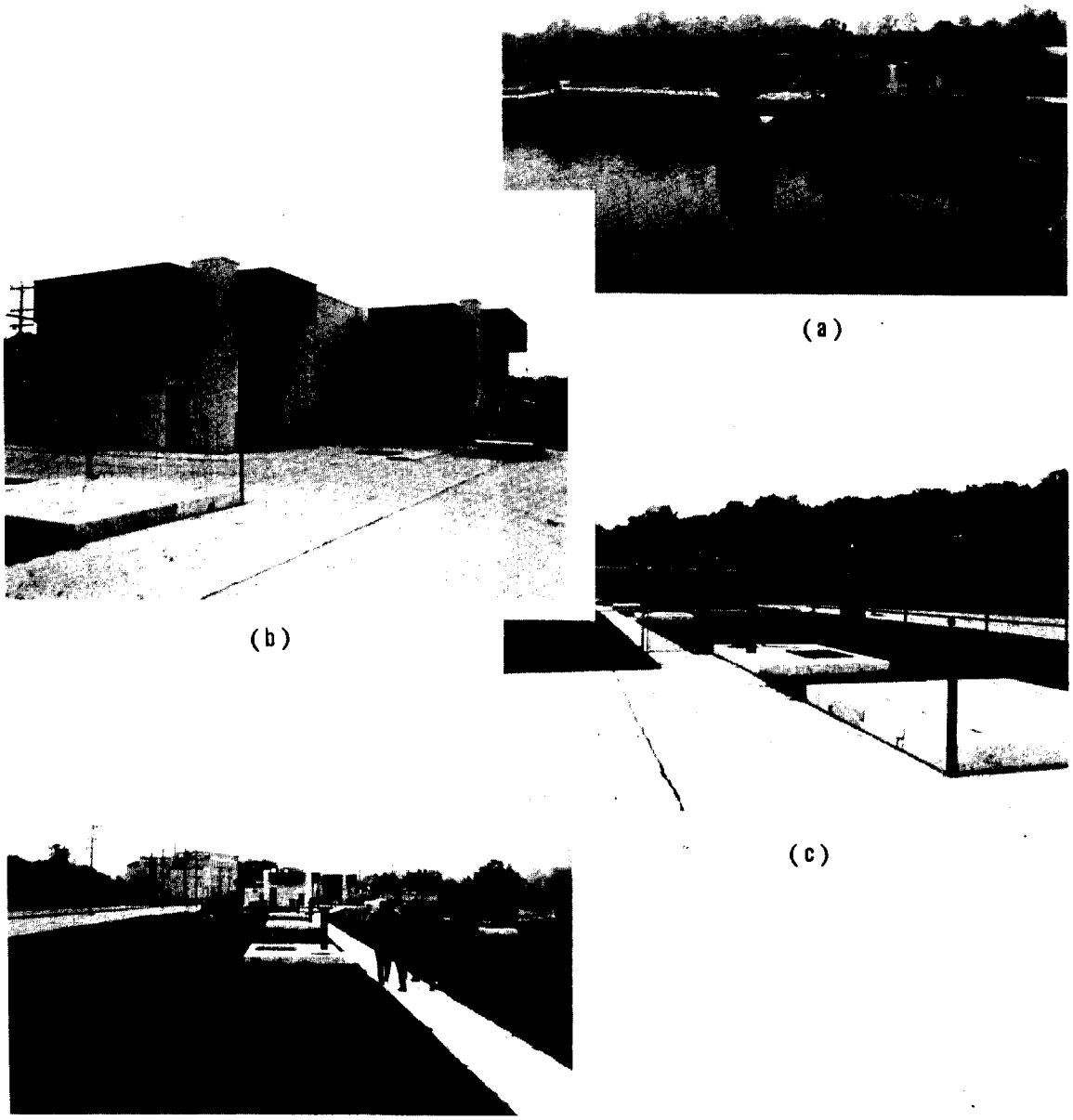

Figure 37. Humboldt Ave. (Milwaukee) retention basin

(a) Exterior view of the predominantly buried facility on the Milwaukee River
(b) Operations building housing chlorination, screening, and pumping equipment
(c) Looking over tanks from operations building (d) Walking above tanks
(note tank area did not require fencing

The facility consists of a mechanically cleaned 3.8 cm (1.5 inch) bar screen, a single detention tank 22.9 meters wide by 128.1 meters long by 6.1 meters deep (75 feet by 420 feet by 20 feet), a dewatering pump station, and chlorination facilities. The detention tank serves as a settling basin, thereby providing primary treatment for combined sewer overflows from large storms. Chlorine injection facilities are included at both the headworks, for odor control, and at the midpoint of the tank, for disinfection during overflows. Following storms, seven mechanical mixers within the tank resuspend the settled solids as the tank contents are pumped back to the interceptor for treatment at a dry-weather plant. During the first year of tank operation, the mixers performed satisfactorily so that it was not necessary to clean the detention tank manually.

Boston, Massachusetts – The Cottage Farm Stormwater Treatment Station was completed in May 1971. A maximum retention capacity of 4.9 Ml (1.3 mil gal.) is provided in the 6 parallel channels, each 8.2 meters wide by 32.9 meters long by 3.1 meters deep (27 feet by 108 feet by 10 feet) [6]. The facility is designed to provide primary treatment and chlorination. It has a 10-minute detention time at a flow rate of 10,200 l/sec (233 mgd), the difference between the capacities of the incoming trunk and outgoing interceptors.

The facility consists of bar screens and coarse screens, a pumping station with a 10.7-meter (35-foot) lift, hypochlorination facilities, detention basins, and an outfall. A schematic of the facility is shown on Figure 38 and photographs are shown on Figure 39. Additional photographs are shown on Figure 80.

Screenings from the 8.9-cm (3-1/2-inch) clear opening bar screens and the 1.27-cm (1/2-inch) clear opening coarse screens are flushed directly to the downstream interceptor. Flow is pumped to the detention tanks, each of which is gated so it can be isolated. Hypochlorite solution is fed to the pump discharges. Overflows from the detention tanks pass through horizontal hinged screens with 0.51-cm (0.2-inch) fine mesh openings, before discharge to the outfall. These screens are used to trap additional suspended matter and carryover. Approximately 2.5 cm (1 inch) of grit and sludge accumulates in the tank and wet well during a storm. Fire hoses and a sloped and troughed floor system are used to aid the flushing of settled solids from the tank during cleanup following each storm (approximately 8 hours are required). These solids are discharged to the downstream interceptor.

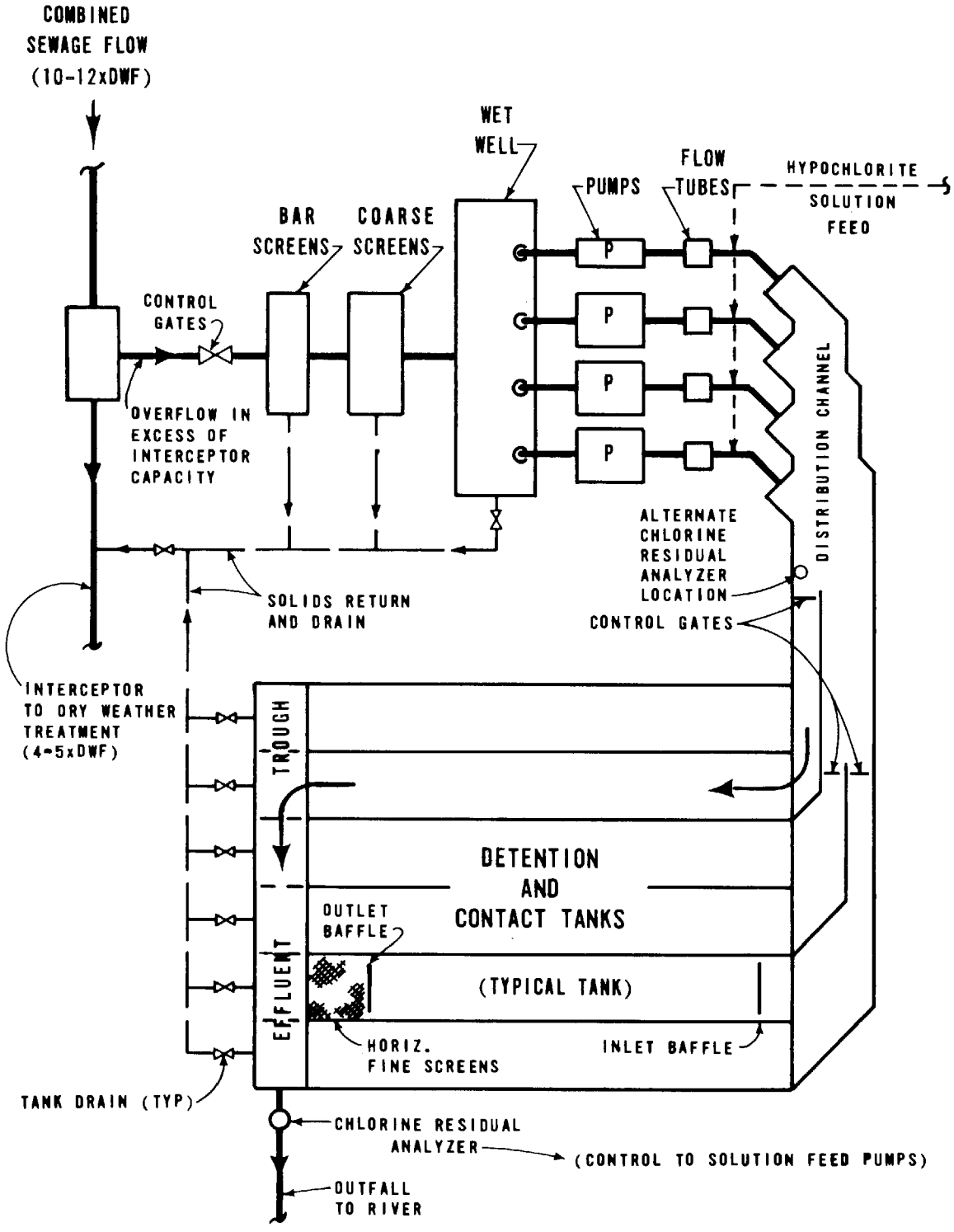

Figure 38. Schematic of Cottage Farm detention and chlorination facility, Boston, Massachusetts

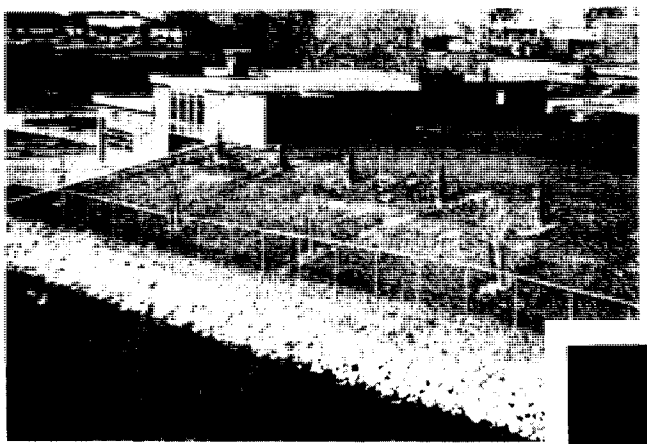

(a)

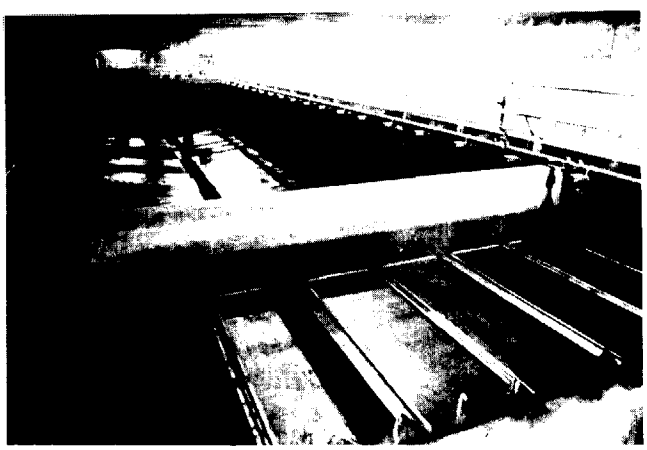

(b)

Figure 39. Cottage Farm (Boston) detention and chlorination facility

(a) Exterior view from Charles River showing buried tanks, drain gate operators, and control building (b) View from effluent trough of one of six parallel bays; horizontal fine screens are seen in foreground

Chicago, Illinois – Chicago has pioneered in the development of abandoned mine storage, deep vertical drop shafts [11], and deep tunnels in hard rock [5] for the interception, conveyance, and temporary storage of combined sewer overflows. Three construction contracts partially funded by the EPA are presently in progress, representing a total investment in excess of $50 million (ENR 2000) providing over 17.7 km (11 miles) of tunnel and appurtenant drop shafts and pumping. Typical examples are shown on Figure 40. Under the recently adopted master plan for the 97,200-ha (240,000-acre) Greater Chicago service area, the following are to be accomplished: (1) treatment of all wet-weather flows at a dry-weather flow facility sized for 1.5 average dry-weather flow maximum rate; (2) interception of all existing wet-weather outfalls by a deep conveyance tunnel system; and (3) storage of all intercepted flows above treatment capacity at one large and two auxiliary reservoirs until they are absorbed by the dry-weather flow treatment facilities operating at nearly a constant maximum rate [9]. The cost for this plan has been estimated to be $2,873 million as opposed to $5,521 million for complete sewer separation, and separation would not meet the proposed water quality or flood control objectives.

The major reservoir would be a quarry 100.7 meters deep by 152.5 to 366.0 meters wide by 4.02 km long (330 feet by 500 to 1,200 feet by 2.5 miles). The combined sewer overflows retained in the reservoir would be aerated continuously, and accumulated solids would be removed periodically by dredging. Most storms would be dewatered in 2 to 10 days; the largest, in 50 days. The reservoir would be dewatered to a dry-weather treatment plant at a rate of 19.8 cu m/sec (450 mgd) or 0.5 times average dry-weather flow. The total storage provided would be equivalent to 7.98 cm (3.14 inches) of runoff, 70,309,500 cu m (57,000 acre-ft), or 9 percent of the annual average rainfall. Based upon this plan, the frequency of overflows to the Chicago River was estimated to be 4 times in 21 years.

The tunnels, a total of 193 km (120 miles) ranging from 3.05 to 12.81 meters (10 to 42 feet) in diameter, would be constructed in dolomite rock 45.8 to 88.5 meters (150 to 290 feet) below the surface. Drop shafts would be placed at approximately 0.80-km (1/2-mile) intervals, and a forced ventilation system providing one air change per hour during dewatering would be operated to control odors and gases. The tunnels would be constructed on self-cleansing gradients with additional provisions for flushing by introducing river water into the tunnel.

Washington, D. C. – At Washington, D. C., a pilot plant was built and tested to assess the feasibility of treatment and

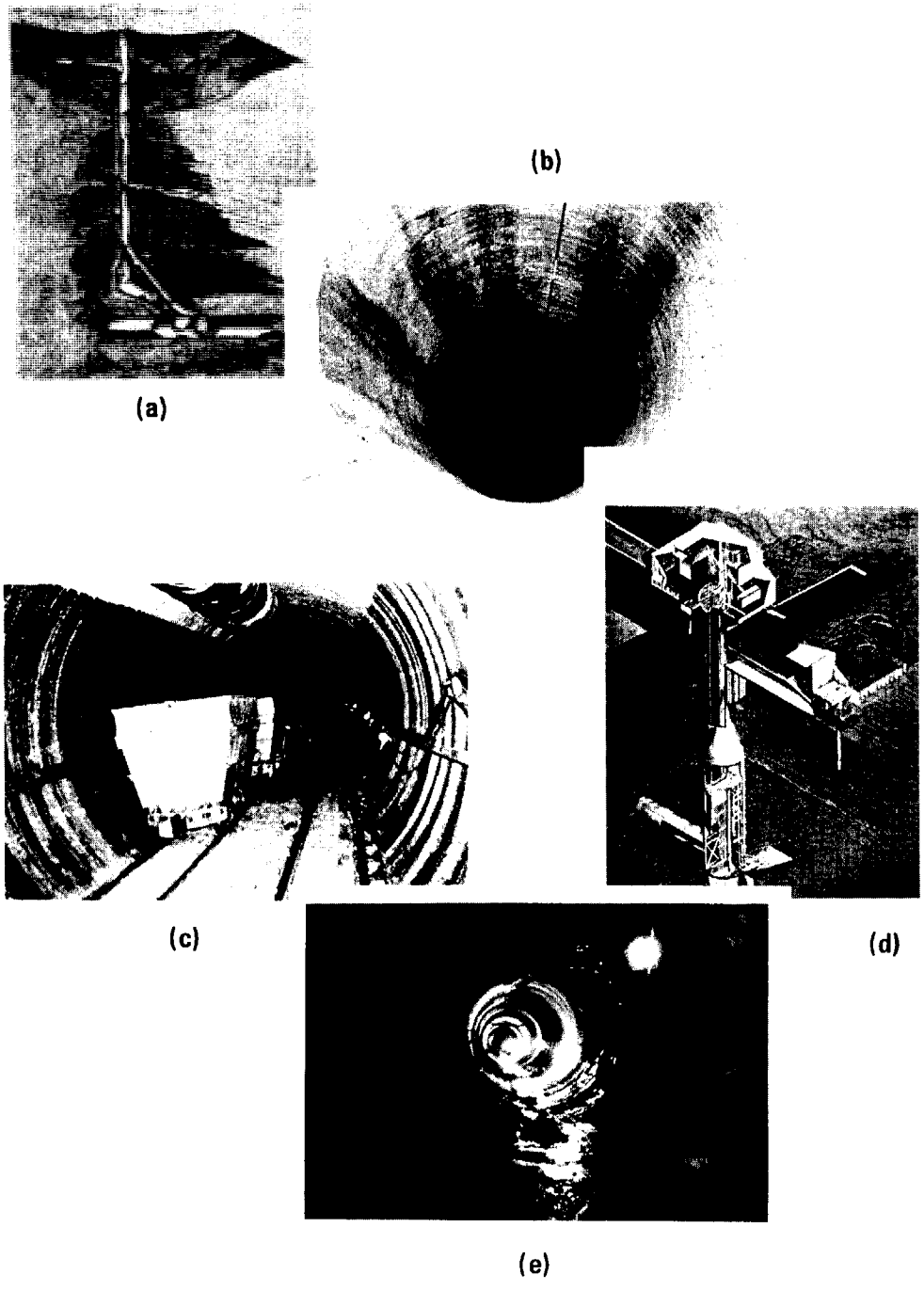

Figure 40. Deep tunnel concepts and construction (Chicago)

(a) Conceptual drawing of drop shaft to intercept street level flows and conduct them to tunnel (b) Drop shaft under construction (c) Tunnel under construction (d) Conceptual drawing of terminal pumping station to raise flows back to interceptor or river level (e) "Mole" excavated tunnel under construction

underwater storage of combined sewer overflows from a 12.15-ha (30-acre) drainage area [4]. The plant consisted of a treatment facility (grit removal, bar rack, and comminution), underwater storage tanks, and the associated instrumentation, pumping, and control systems. Two 0.38-Ml (0.1-mil gal.) tanks were anchored underwater in the Anacostia River. The tanks were standard pillow tanks made of nylon-reinforced synthetic rubber.

Portions of the overflow from a combined sewer overflow line were diverted to the pilot plant. The flow entered the grit chamber of the pilot plant, then passed through a bar screen followed by a comminution before entering the underwater storage tanks. Material removed in the grit chambers was returned to the interceptor. After the storm subsided and during nonpeak hours, liquid was pumped from the tanks into the interceptor for transport to the dry-weather treatment plant. To prevent settlement of solids in the storage tanks, compressed air was forced into the tanks to agitate any settled sludge and to enable pumping out of all the contents of the storage tanks to the interceptor.

Of the numerous operational problems encountered during this project, the major one was clogging of the effluent port by the flexible tank top membrane during dewatering.

Sandusky, Ohio – A 0.76-Ml (0.2-mil gal.) capacity underwater storage facility was constructed and tested in Sandusky, Ohio. The facility consisted of three basic system components, the underwater storage tank with its associated piping and controls, a connecting structure to the existing outfall, and a control building to house instrumentation and pump systems [19]. Two 0.38-Ml (0.1-mil gal.) collapsible tanks serving a 6.0-ha (14.9-acre) area were anchored underwater in Lake Erie. The tanks consist of a steel pipe frame in the form of a modified octagon with a nylon-reinforced synthetic rubber flexible membrane top and bottom. A concrete pad was poured to fit the bottom contours of both storage tanks. The tank top conforms to the bottom contours when empty and the top rises upon filling.

Combined sewer overflow passes through a bar screen in a connecting chamber to remove all trash from the overflow before passing to the influent pipes to the tanks. A diversion weir allows control of the filling of one tank or the other. At high flow rates, both tanks fill simultaneously. After tank capacity is reached, the flow backs up in the connection chamber and passes out a safety overflow. Combined sewer overflow reaching the underwater storage tanks passes through a sedimentation control chamber over

the inlet port of each tank. Most suspended material settles out within this chamber. This chamber also supports the top membrane during dewatering to prevent closing of the tank effluent port. The combined sewer overflow is stored until interceptor capacity is available to transport the stored volume to the treatment plant. Emptying the storage tanks by pumping can be accomplished in about one hour per tank. Each tank is emptied separately. A tank flushing system is operated in conjunction with the pumping of each tank. In tests to date, the operation of the tanks has proven successful.

Cost Data

Costs of storage structures are highly dependent upon the location of construction; land, foundations, groundwater, and aesthetics are primary considerations. The costs reported in Table 34, adjusted to ENR 2000, are presented only as preliminary guides.

Table 34. SUMMARY OF STORAGE COSTS FOR VARIOUS CITIES[a]

Location	Storage, mil gal.	Capital cost, $	Cost per acre, $/acre	Storage cost, $/gal.	Annual operation and maintenance cost, $
Seattle, Wash. [14]					
Control and monitoring system	--	3,500,000	--	--	--
Automated regulator stations	--	3,900,000			
	32.0	7,400,000	--	0.23	250,000
Minneapolis-St. Paul, Minn. [7]	--	3,000,000	5,550	--	--
Chippewa Falls, Wis. [18]					
Storage	2.8	744,000	8,260	0.26	2,500
Treatment	--	186,000	2,070	--	7,200
	2.8	950,000	10,330	0.26	9,700
Akron, Ohio [17]	0.7	441,000	2,340	0.62	23,300
Oak Lawn, Ill. [16]					
Melvina Ditch Detention Reservoir	53.7	1,388,000	540	0.03	--
Jamaica Bay, New York City, N.Y. [10,12]					
Basin	10.0	21,200,000	6,530	2.12	--
Sewer	13.0	--	--	--	--
	23.0	21,200,000	6,530	0.92	--
Humboldt Avenue, Milwaukee, Wis. [3, 13]	4.0	2,010,000	3,560	0.50	50,000
Boston, Mass. [6]					
Cottage Farm Stormwater Treatment Station	1.3	6,200,000	--	4.74[b]	65,000
Chicago, Ill. [9]					
Reservoirs	2,736.0	568,000,000	2,370	0.21	--
Collection, tunnel, and pumping[c]	2,834.0	755,000	3,150	0.27	--
Reservoirs and tunnels	5,570.0	1,323,000,000	5,500	0.24	--
Treatment	--	1,550,000,000	6,460	--	--
	5,570.0	2,873,000,000	11,960	0.24	8,700,000
Sandusky, Ohio [19]	0.2	535,000	36,000	2.67	6,380
Washington, D.C. [4]	0.2	883,000	29,430	4.41	3,340

a. ENR = 2000.

b. Includes pumping station, chlorination facilities, and outfall.

c. Includes 193.1 km (120 miles) of tunnels.

Note: $/acre x 2.47 = $/hectare; $/gal. x 0.264 = $/l; mil gal. x 3.785 = Ml

Section X

PHYSICAL TREATMENT WITH AND WITHOUT CHEMICAL ADDITION

Physical treatment operations are a means of treatment in which the application of physical forces predominate. Typical examples include screening, sedimentation, flotation, and filtration. Physical treatment operations may or may not include the addition of small concentrations of chemicals.

Physical treatment operations in many ways are well suited to combined sewer overflow pollution abatement. Suspended solids characteristically found in large quantities in combined sewage are especially amenable to removal by physical treatment. Most physical treatment operations are easily automated and operate at high efficiencies over a wide range of flows. And, most important, the facilities can stand idle for long periods of time without affecting treatment efficiencies.

The physical treatment operations being used for combined sewer overflow treatment range from commonly used, well understood processes such as sedimentation and filtration to new ones such as the swirl concentrator/regulator and fine screens. The different operations are discussed here in the following order: sedimentation, dissolved air flotation, screens, and filtration. The swirl concentrator/regulator was discussed previously in Section VIII.

SEDIMENTATION

The time-honored method for removing SS is sedimentation. Removal efficiencies in primary clarifiers usually are approximately 30 percent for BOD_5 and 60 percent for SS [3, 20, 25]. The types of solids removed in primary clarifiers are somewhat comparable to those in combined sewer overflows. Both are represented by discrete, nonflocculating particle settling. Removal efficiencies for BOD_5 and SS at combined sewer overflow storage/sedimentation facilities have been reported to approximate those for primary clarifiers.

Although sedimentation may be the preferred method for removing SS from combined sewer overflows, it is not always the most economical. The primary limitations are the large size of sedimentation facilities, the long detention times, and the low removal efficiency for colloidal matter [7].

Two solutions to these limitations are: (1) combining the sedimentation process with storage facilities, which is usually done simply by the nature of the storage configuration, and (2) using tube settlers or separators to reduce the detention time and improve SS removals. Several storage/sedimentation facilities have been constructed and operated with apparent success (see Table 35). Relatively little operational information is available, however. Further data will be available as some of the ongoing projects are completed.

Table 35. SUMMARY DATA ON SEDIMENTATION BASINS COMBINED WITH STORAGE FACILITIES

Location of facility	Size, mil gal.	Type of storage facility	Removal efficiency		Type of solids removal equipment[a]
			SS	BOD_5, %	
		a. In operation			
Cottage Farm Detention and Chlorination Facility, Cambridge, Mass.	1.3	Covered concrete tanks	45	Erratic	Manual washdown
Chippewa Falls, Wis.	2.8	Asphalt paved storage basin	18-70	22-74	Solids removal by street cleaners
Columbus, Ohio					
Whittier Street	4.0	Open concrete tanks	15-45	15-35	Mechanical washdown
Alum Creek	0.9	Covered concrete tank	NA[b]	NA	Mechanical washdown
Humboldt Ave., Milwaukee, Wis.	4.0	Covered concrete tanks	NA	NA	Resuspension of solids by mixers
Spring Creek Jamaica Bay, New York, N.Y.	10.0	Covered concrete tanks	NA	NA	Traveling bridge hydraulic mixers
		b. In planning or construction phase			
Mount Clemens, Mich.	5.8	Concrete tanks	--	--	Resuspension of solids and mechanical washdown by eductors
Lancaster, Pa.	1.2	Concrete silo	--	--	Air agitation and pumping
Weiss Street, Saginaw, Mich.	3.6	Concrete tanks	--	--	Mechanical and manual washdown

a. All facilities store solids during storm event and clean sedimentation basin when flows to the interceptor can handle the solid water and solids.

b. NA = not available.

Note: mil gal. x 3,785.0 = cu m

Typical Combined Sewer Overflow Sedimentation Facilities

The description of the individual sedimentation facilities is presented here except for combination storage/clarifiers previously discussed in Section IX, Storage.

Columbus, Ohio – This was perhaps the first application of combined sewage holding tanks built in the United States. The Whittier Street Storm Standby Tanks were built in 1932. The three tanks, as originally constructed, had no sludge collection equipment. The floors were sloped to aid drainage and the washdown of collected solids following the storm. In 1966, the tanks were modified and mechanical sludge collection equipment installed. Floor elevations of the storm standby tanks are such that they are above the flow level in the interceptor at 2 times dry-weather flow. To fill the tanks, a downstream regulating gate is throttled automatically to allow only 2 times dry-weather flow to pass on to the treatment plant. The excess flow backs up, flowing into the storm standby tanks. The tanks are filled sequentially to reduce cleanup time when all three tanks are not needed to contain the storm flow. Overflow occurs only after all three tanks are filled. The Whittier Street facility has a capacity of 11,040 l/sec (252 mgd), with a detention period of 24 minutes [19]. The total tank volume is 15.9 Ml (4.2 mil gal.).

Dallas, Texas – The Bachman Stormwater Plant has three settling tanks with a combined capacity of 1,225 l/sec (28 mgd). This plant was designed to test the effects of three slightly different processes on heavily infiltrated municipal sewage. The three processes are (1) flocculation followed by sedimentation and additional clarification using tube settlers, (2) flocculation followed by sedimentation, and (3) sedimentation only. Waste lime sludge from a nearby water treatment plant and polymer are used as flocculants. All three tanks are rectangular with circular sludge collectors only in the first half of each tank. Operational tests are being run presently and no performance data are yet available.

Mount Clemens, Michigan – Planning is currently underway for a sedimentation/storage facility to work in conjunction with the biological treatment system described in Section XI, Biological Treatment. The Mount Clemens storage facilities are divided into two basic parts. The first is a combination storage/clarifier portion consisting of three rectangular tanks in series with a total storage capacity of 21,950 cu m (5.8 mil gal.). The tanks are separated by weirs which allow each tank to be filled sequentially. The bottoms of the tanks are sloped toward a channel running the length of

each tank. Settled solids are resuspended by using submerged eductors along the walls of the tanks. Each eductor is directed to the center channel and is activated after the tanks have been partially drained.

Saginaw, Michigan – The Weiss Street facility, a storage/clarifier combination with a 13,620 cu m (3.6 mil gal.) storage capacity, is currently under construction. The first of three tanks is designed to capture the grit and most of the heavier suspended matter. It operates in series with the remaining two tanks which operate in parallel. The tank bottoms are sloped and troughed to aid in the removal of the settled solids. The tanks are washed down under manual control after each storm using spray nozzles mounted along walkways next to the tanks. The first tank also has a clamshell bucket to remove grit. The last two tanks have horizontal screens placed below the water level just in front of the overflow weirs. A baffle is used to ensure water flows upward through the screens before overflowing the weir.

Operation

It is interesting to note that in all the storage/sedimentation projects, settled sludge is stored until after the storm event. At this time, the contents in the tanks, including the solids, are slowly drained back to the interceptor. The notable exception to this procedure is at Chippewa Falls, Wisconsin, where solids are removed from the basin after dewatering using a front end loader or an ordinary street sweeper for disposal at a sanitary landfill.

Several different methods for resuspending or removing the settled solids are used at the various other storage/sedimentation facilities. At the Humboldt Avenue facility in Milwaukee, Wisconsin, mechanical mixers are used to resuspend the settled solids. Traveling bridges with hydraulic nozzles are used at the Spring Creek plant in New York City. At the Cottage Farm facility, a fixed water spray in conjunction with a sloped and troughed floor is used to flush the solids out of the basins.

The use of tube settlers and separators has been limited mainly to water treatment facilities and some secondary clarifiers at municipal sewage treatment plants. Their use in the storm overflow facilities is found presently only at the Bachman Stormwater Plant in Dallas. To date, the operating data for this plant are insufficient for reaching any conclusions regarding the effectiveness of tube settlers for storm overflows [5, 4].

The advantages of sedimentation are that (1) the process is familiar to the design engineers and operators; (2) the facilities can be made to operate automatically; (3) sludge collection equipment can be added to storage facilities with a very minimal incremental cost; (4) the process provides for storage of at least part of the overflow; and (5) disinfection can be effected concurrently with sedimentation in the same tank. The disadvantages are that (1) the land requirement is high; (2) the cost when the process is used alone is high; (3) only primary treatment is afforded the storm overflow; and (4) some manual cleaning of most basins is necessary after each storm event. It is recommended that the primary use of sedimentation continue to be in conjunction with storage facilities.

Costs

The actual costs of sedimentation facilities are difficult to assess, particularly when they are combined with storage facilities. The cost of sedimentation in the latter case is presented as the total cost, since a sedimentation basin alone would cost approximately the same amount. The cost data available for various storage/sedimentation facilities are presented in Table 36.

Table 36. COST OF STORMWATER SEDIMENTATION FACILITIES[a]

Location of facility	Size,[b] mgd	Capital cost, $/mgd	Capital cost, $/acre	Annual operation and maintenance cost, $/mgd
Cambridge, Mass.				
Cottage Farm Stormwater Treatment Station	62.4	100,000[c]	--	1,240
Columbus, Ohio				
Whittier Street	192	32,000	--	--
Alum Creek	43	43,000	--	--
Milwaukee, Wis.				
Humboldt Avenue	192	10,500	3,560	260
New York, N. Y.				
Spring Creek-Jamaica Bay	480	44,000	6,530	--

a. ENR = 2000.

b. Maximum capacity assuming 30-minute detention time.

c. Includes pump station and screening facilities.

Note: mgd x 43.808 = l/sec

Other basic cost data for the sedimentation facilities have been presented previously in Table 34 in Section IX, Storage. The data are scattered and no acceptable curve can be derived from them. To assist in evaluating the data, four estimates were made using cost curves from the literature [18]. The resulting points form the curve shown on Figure 41. The curve is intended to give only an indication of the relative magnitude of construction costs for sedimentation facilities.

DISSOLVED AIR FLOTATION

Introduction

Dissolved air flotation is a unit operation used to separate solid particles or liquid droplets from a liquid phase. Separation is brought about by introducing fine air bubbles into the liquid phase. As the bubbles attach to the solid particles or liquid droplets, the buoyant force of the combined particle and air bubble is great enough to cause the particle to rise. Once the particles have floated to the surface, they are removed by skimming. The principal reason for using dissolved air flotation is because the relative difference between the specific gravity of the combined particle and air bubble and the effective specific gravity of water is made significantly higher and is more controllable than using plain sedimentation. Thus, according to Stokes' Law, the velocity of the particle and air bubble is greater than the particle itself because of the greater difference in specific gravities. In engineering terms this means higher overflow rates and shorter detention times can be used for dissolved air flotation than for conventional settling.

This process has a definite advantage over gravity sedimentation when used on combined sewer overflows in that particles with densities both higher and lower than the liquid can be removed in one skimming operation. Dissolved air flotation also aids in the removal of oil and grease which are not as readily removed during sedimentation.

There are two basic processes for forming the air bubbles: (1) dissolve air into the waste stream under pressure, then release the pressure to allow the air to come out of solution, and (2) saturate the waste with air at atmospheric pressure, then apply a vacuum over the flotation tank to reduce the pressure allowing the bubbles to form. The first process is used most commonly. There are three methods for implementing the first process. The first method is the full flow method where all the flow is pressurized and mixed with air before entering the flotation tank. The second is

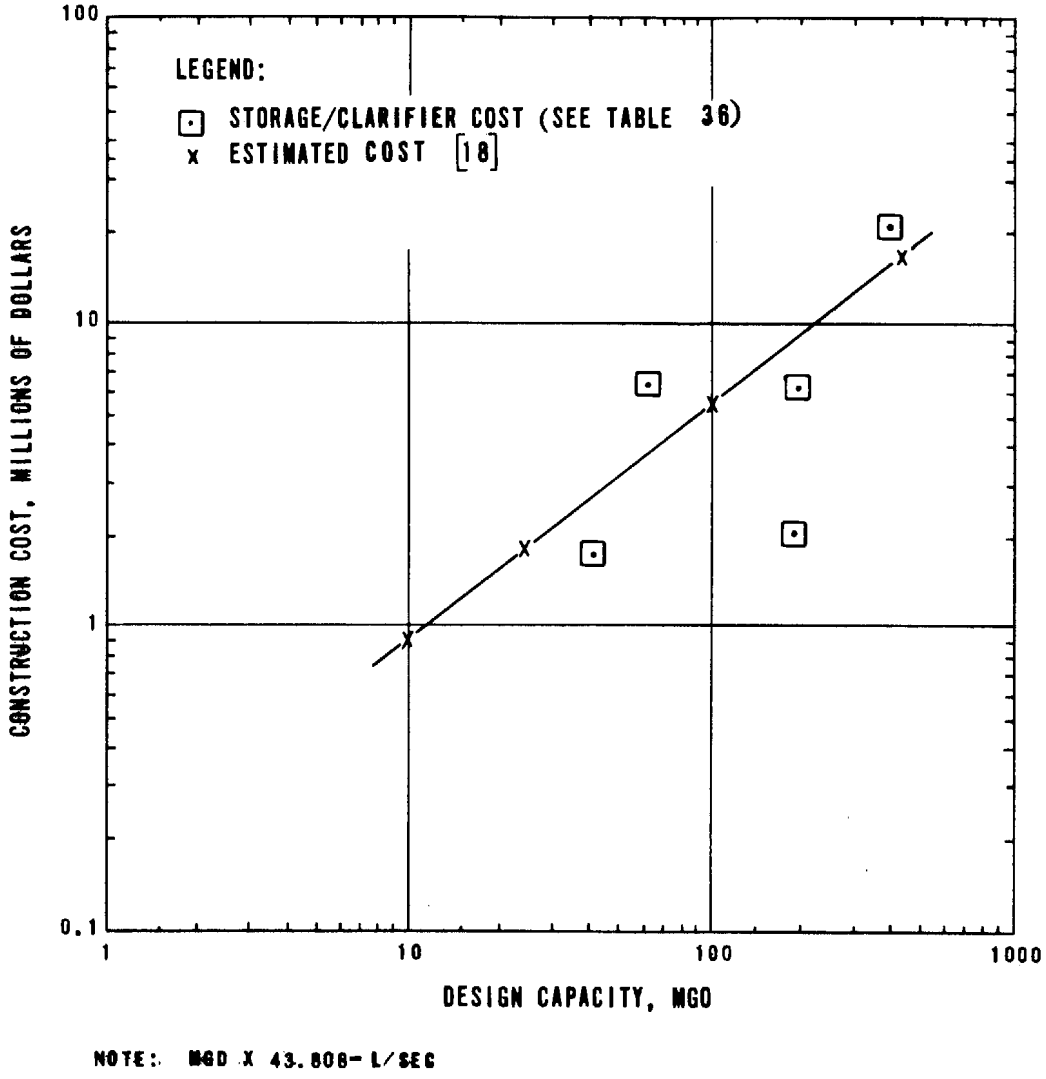

Figure 41. Construction cost versus design capacity for sedimentation

split flow flotation where part of the incoming flow is pressurized and mixed with air before being recombined with the remaining flow and entering the flotation tank. And the last is the recycle system in which a portion of the effluent is pressurized before being returned and mixed with the incoming flow. The last two methods are used for the larger size units since they require only a portion of the total flow to be pressurized. In combined sewer overflow treatment studies the split flow method has been used because the flotation tank only needs to be designed for the actual flow arriving at the plant and need not include any recycled flow. However, subsequent laboratory studies have indicated better removals may be achieved by using the recycle type of dissolved air flotation [39].

Typical facilities consist of saturation tanks to dissolve air into a portion of the flow, a small mixing chamber to recombine the flow that has been pressurized with that which has not, and flotation tanks or cells. In most flotation cells, two sets of flight scrapers, top and bottom, are used. These remove the accumulated float and settled sludge. At two major combined sewer overflow study sites, however, the bottom scrapers were not used. Instead, 50-mesh rotating fine screens ahead of the dissolved air flotation units removed the coarser material in the waste flows, thus eliminating the majority of settleable material. A schematic of the dissolved air flotation facilities at Racine, Wisconsin, is shown on Figure 42. Photographs of a typical dissolved air flotation facility are shown on Figure 43.

Design Criteria

The principal parameters that affect removal efficiencies are (1) overflow rate, (2) amount of air dissolved in the flows, and (3) chemical addition. Chemical addition has been used to improve removals, and ferric chloride has been the chemical most commonly added.

Any one of several methods may be used to size a dissolved air flotation facility. Values for design parameters used in the combined sewer overflow studies are listed in Table 37. The most commonly used design equation is that recommended by the American Petroleum Institute [1].

When designing dissolved air flotation, regardless of whether by formulated equations found in the literature or by the design parameters listed previously in Table 37, certain items should be remembered. First, the saturation tank should be a packless chamber to prevent solids plugging or buildup and second, excess amounts of air should be supplied

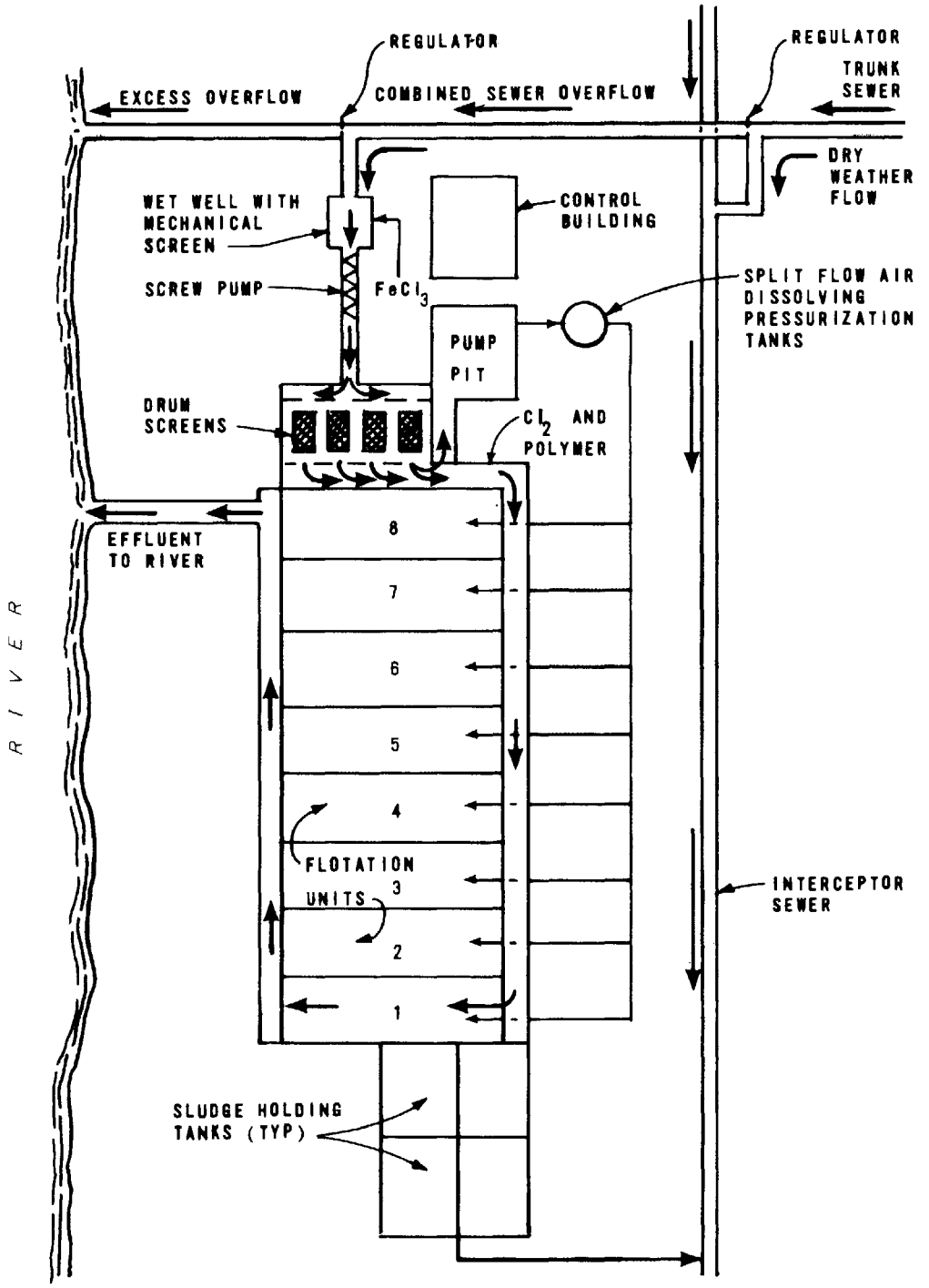

Figure 42. Schematic of dissolved air flotation facilities at Racine, Wisconsin [8]

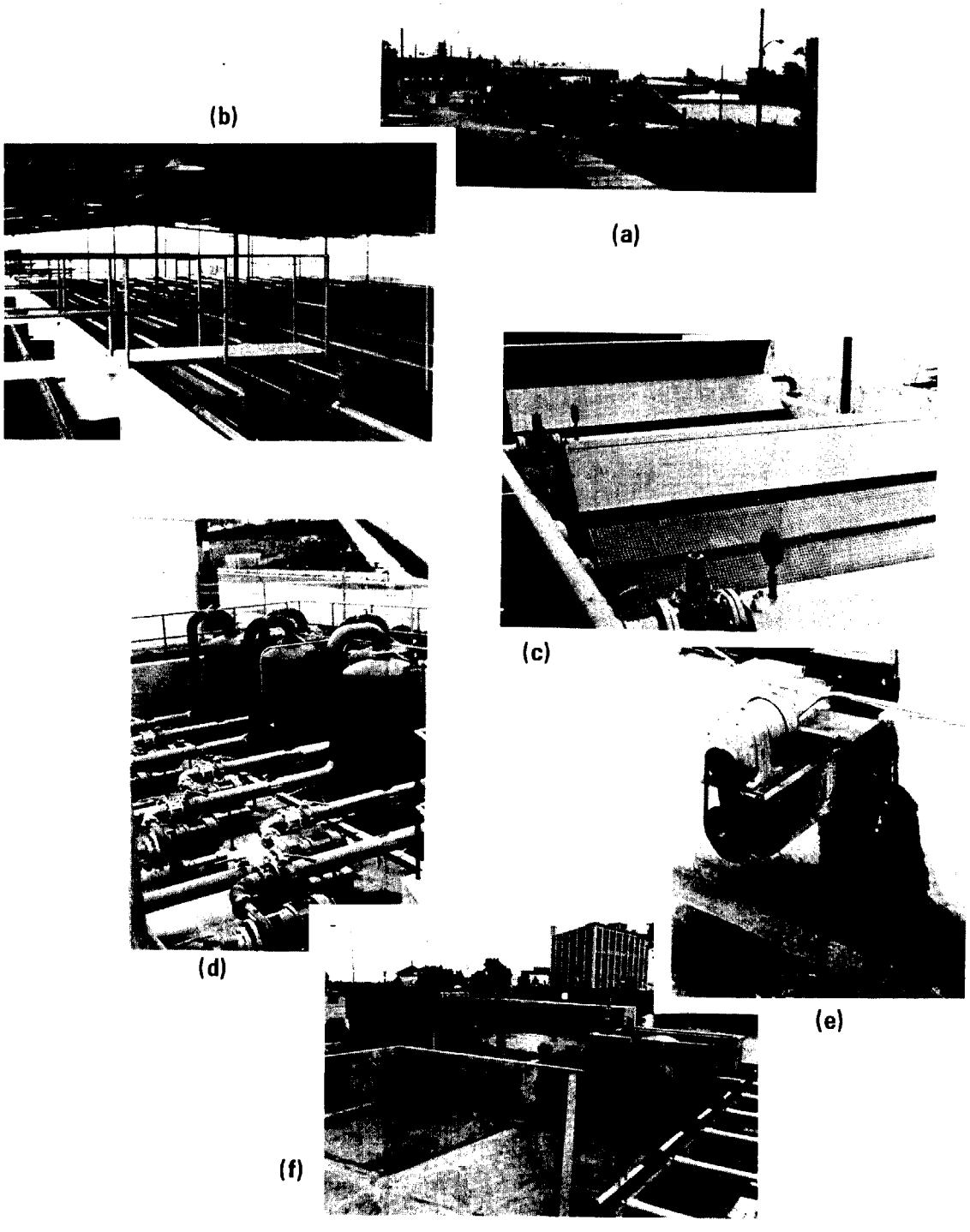

Figure 43. Dissolved air flotation facilities (Racine)

(a) Overview of site during construction (b) Overview of flotation tanks after light roof addition (c) Fine drum screen pretreatment units (d) Air saturation (pressurization) tanks (e) End of float drawoff (helical cross conveyor) (f) Float holding tanks (for temporary storage before feedback to interceptor)

Table 37. DISSOLVED AIR FLOTATION DESIGN PARAMETERS[a]

Design parameter	Range
Overflow rates, gpd/sq ft	2,000-4,500
Horizontal velocity, fpm	1.3-3.7
Detention time	
Flotation cell, min	15-20
Saturation tank, min	1-3
Mixing chamber, min	~ 1
Ratio of pressurized flow to total flow, %	20-30
Air to pressurized flow ratio, scfm/100 gal.	1.0
Pressure in saturation tank, psi	50-60
Float	
Volume, % of total flow	0.75-1.4
Concentration of float, %	1-2
Settleable sludge handling	
Without pretreatment	Provide for sludge removal equipment in flotation cells.
With pretreatment	Pretreatment uses self-cleaning 50-mesh fine screens; sludge removal equipment not required in flotation cells.

a. Values for split flow dissolved air flotation.

Note: gpd/sq ft x 1.698 x 10^{-3} = cu m/hr/sq m

fpm x 0.00508 = m/sec

scfm/100 gal. x 0.00747 = cu m/min/100 liters

psi x 0.0703 = kg/sq cm

and bled off since oxygen has a higher solubility than nitrogen. Finally, the pressure release valve and the discharge line from the saturation tank should be designed to induce good mixing with the remainder of the flow and promote fine bubble formation [1].

Overflow Rate – The removals achieved by dissolved air flotation are governed by several factors. The most critical design parameter is the surface overflow rate which can be easily translated into the rise rate of the particle and air bubble. To remove an air particle with a given rise rate, the corresponding overflow rate must not be exceeded. In rough terms, it has been reported that overflow rates above 6.1 cu m/hr/sq m (3,600 gpd/sq ft) start to reduce removal efficiencies. Below this value the removals remain relatively constant.

Dissolved Air Requirements – Also important in affecting removals is the amount of air dissolved. An insufficient supply of dissolved air reduces the amount of air available for each solid particle, and thus the difference between the air-particle density and the density of water is not great enough to meet the minimum rise rate. Also, the better the atomization or bubble coverage over the plan area of the tank, the better the chance for collision between the bubbles and the suspended particles. The amount of air supplied to a split flow flotation facility is dependent on the percentage of flow saturated with air and the pressure. In the studies using combined sewer overflows, the optimum value for the percentage of flow pressurized averages around 20. In one study with a full flow system, removals were found to be directly related to the pressure used in the saturation tank, see Figure 44 [17]. The optimum pressure is 3.5 to 4.2 kg/sq cm (50 to 60 psi) which agrees with other studies performed [40, 2].

Flotation Aids – Probably, the most controllable factor affecting particle removals is the amount and type of chemicals added. In all studies, some kinds of chemicals were added to improve removals. In one case, small floating beads were used in lieu of air to provide the flotation [12]. This proved to be unsuccessful. The majority of chemicals added, however, were polyelectrolytes and ferric chloride. Ferric chloride has been reported to be the most successful and has improved SS removals by more than 30 percent. The use of polyelectrolytes alone and in one case bentonite clay with polyelectrolytes has not resulted in important increases in removal efficiencies. Lime and alum have also been used.

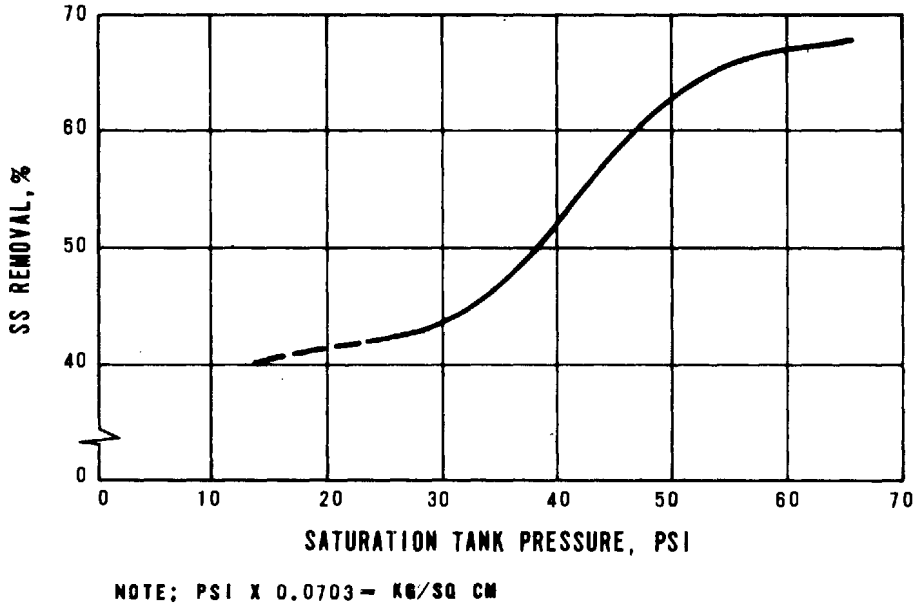

Figure 44. Relationship between suspended solids removal and saturation tank pressure [17]

In the studies on treatment of combined sewer overflows, SS removals of approximately 60 percent and BOD_5 removals of about 40 percent have been reported. The addition of 20 to 30 mg/l of ferric chloride increased SS removals to approximately 70 percent and BOD_5 to about 50 percent. Phosphorus removals increased from near zero to 70 percent. The average reported removals from three studies are listed in Table 38 [40, 17, 12].

Demonstration Projects

There have been four studies using dissolved air flotation to treat combined sewer overflows. These are at Milwaukee and Racine, Wisconsin (the latter of which is just finishing construction in mid-1973), Fort Smith, Arkansas, and San Francisco, California. The Fort Smith and Milwaukee plants were pilot operations.

Milwaukee, Wisconsin [40] — The 220-l/sec (5-mgd) pilot demonstration plant was a prefabricated steel unit set on the ground surface under an elevated section of highway. The use of fine screens (297 micron openings) ahead of the flotation chamber to eliminate the need for bottom scrapers was initially tested at this facility. The screens removed

Table 38. TYPICAL REMOVALS ACHIEVED WITH SCREENING/DISSOLVED AIR FLOTATION

	Without chemicals		With chemicals	
Constituents	Effluent, mg/l	% Removal	Effluent, mg/l	% Removal
SS	81-106	56	42-48	77
VSS	47[a]	53[a]	18-29	70
BOD	29-102	41	12-20	57
COD	123[a]	41[a]	46-83	45
Total N	4.2-16.8	14	4.2-15.9	17
Total P	1.3-8.8	16	0.5-5.6	69

a. Only one set of samples.

grit and most of the nonfloatable material successfully. The system used the split flow method for dissolving air into the flow. Approximately 20 percent of the total flow was pressurized to 2.8 to 3.5 kg/sq cm (40 to 50 psi) in a packless saturation tank, then remixed with the remainder of the flow for one minute in a mixing chamber. Flow then entered the flotation cell for flotation and removal of the floating matter (float) by scrapers. The float was collected in a holding tank for discharge back to the dry-weather interceptor.

Racine, Wisconsin – The Racine prototype facilities are essentially the same design as the one in Milwaukee. It, however, is constructed partly underground out of concrete. There are two plants: one 615 l/sec (14 mgd) and the other 1,925 l/sec (44 mgd) in size. Flow to each plant passes through a 2.5 cm (1-inch) bar screen before being lifted to the fine screens by screw pumps. Each plant is built with multiple flotation tanks to accommodate a high flow variation. A separate air saturation tank and pump serves each flotation tank. Flow into the flotation tanks is controlled by weirs which allow sequential filling of only as many tanks as are necessary to handle the flow.

Fort Smith, Arkansas [17] – The pilot-plant study at Fort Smith, Arkansas, used a dual flotation cell tank preceded by a circular vibrating screen and four hydrocyclones for gross SS removal. Full flow pressurization was used with a packless saturation tank. The flotation cells, with an effective surface area of 22 sq m (240 sq ft), had both float scrapers and bottom sludge scrapers.

The dissolved air flotation system, with 12 minutes detention time, removed suspended solids from combined sewage as effectively as conventional clarifiers with 4 hours detention time. During rain events and without chemical aids, the system removed an average of 69 percent of the suspended solids passing a gyratory screen installed to remove gross particles. Injection of alum and a polyelectrolyte into the system increased the removal rate to an average of 84 percent. Alum alone was ineffective. Without chemical aids, BOD_5 reduction averaged 26 percent. When chemical flocculating aids were injected, BOD_5 reduction increased to an average of 42 percent. The float collected contained 5 to 7 percent dried solids of 70 percent volatility.

San Francisco, California – The facility at San Francisco is a complete prototype plant. The plant is fully automated and contains mechanically cleaned bar screen, chemical feed equipment, pressurizing pumps, saturation tanks, two 525-l/sec (12-mgd) dissolved air flotation tanks, and chlorination facilities. It can function on either the split flow or recycle method of operation and accepts overflow from a combined sewer. The flotation cells have both float scrapers and bottom sludge scrapers. Wet-weather operational data to date have been sparse. However, extensive testing has been performed using raw and diluted raw sewage [16].

A summary of the performance characteristics for this facility is shown in Table 39. The removal of pollutants at any given level of process variables, and with air/solids ratio nonlimiting, was greatly dependent upon the type and dosage of chemicals. Alum was more effective than polymer for the chemical conversion of the influent solids to forms susceptible to separation by dissolved air flotation. Increasing process efficiency was observed with increasing alum dosages and with decreasing liquid loading rates. The character of the float/sludge, which for convenience was combined into a single waste stream for analysis, was dependent on the type and amount of chemical used for pretreatment. Average characteristics ranged from 22 to 50 mg/l for oil and grease, 23 to 26 mg/l for total nitrogen, 0.5 to 1.8 mg/l for orthophosphate, and 98 to 584 mg/l for total suspended solids.

Table 39. SUMMARY OF PERFORMANCE CHARACTERISTICS, BAKER STREET DISSOLVED AIR FLOTATION FACILITY [16] SAN FRANCISCO, CALIFORNIA

	Effluent concentration, mg/l		Removal efficiency, %		
Constituent	Maximum	Minimum	Maximum	Minimum	Average
BOD_5	114.0	34.0	70.5	13.5	46.1
COD	205.0	53.0	77.0	10.8	44.4
Settleable solids	15.0	<0.1	93.5	0.0	47.7
Oil and grease	26.3	3.3	63.2	0.0	29.1
Floatables	0.57	<0.01	100.0	60.0	95.2
Total coliform	2.4×10^5 [a]	<30 [a]	>99.99	99.44	99.92
Fecal coliform	2.4×10^5 [a]	<30 [a]	>99.99	99.44	99.91
Total nitrogen	20.1	10.6	53.0	0.0	18.4
Orthophosphate	4.45	<0.07	99.0	43.4	80.9
Color	22.0	2.0	95.0	15.8	57.3

a. MPN/100 ml

Advantages and Disadvantages

The advantages of dissolved air flotation are that (1) moderately good SS and BOD_5 removals can be achieved; (2) the separation rate can be controlled by adjusting the amount of air supplied; (3) it is ideally suited for the high amount of SS found in combined sewer overflows; (4) capital cost is moderate owing to high separation rates, high surface loading rates, and short detention times; and (5) the system can be automated. Disadvantages of dissolved air flotation include: (1) dissolved material is not removed without the use of chemical additions; (2) operating costs are relatively high compared to other physical processes; (3) greater operator skill is required; and (4) provisions must be made to prevent wind and rain from disturbing the float.

Costs

The cost of dissolved air flotation facilities scaled to a 1,095 l/sec (25 mgd) capacity is presented in Table 40. The wide spread between the San Francisco data and the remaining two locations is attributed to the architectural treatment given to San Francisco's facilities. In all cases extra cost items such as cofferdams, special foundations, etc., were not included but pretreatment devices were. The available data were plotted to further compare the costs and to help develop a cost equation (see Figure 45). The developed equation, limited to facilities ranging from 219 to 43,810 l/sec (5 mgd to 1,000 mgd) is:

$$Ca = 58{,}000\ (Qa)^{0.84}$$

where Ca is the capital cost of the facility and Qa is the plant capacity in mgd. The curve defined by this equation is shown on Figure 45 as well as a similar curve developed for sedimentation facilities. A comparison between the two cost curves shows dissolved air flotation costs at about

Table 40. DISSOLVED AIR FLOTATION COST FOR 25 MGD[a]

Plant location	Fort Smith, Arkansas (Estimated cost)	Milwaukee, Wisconsin: Steel tank (Actual cost)	Milwaukee, Wisconsin: Concrete tank (Estimated cost)	Racine, Wisconsin (Actual cost)	San Francisco, California (Actual bid cost)	Average cost
Construction cost including pre-treatment devices[b]	$480,000	$580,000	$686,000	$703,000	$1,760,000	$842,000
Operation and maintenance						
Total cost, ¢/1,000 gal.	10.83	5.75	--	3.34	--	6.64
Chemical cost alone, ¢/1,000 gal.	--	4.17	--	2.71	--	5.11[c]

a. ENR = 2000.

b. Fort Smith used hydraulic cyclones for pretreatment; Milwaukee and Racine used 50-mesh fine screens; San Francisco used only bar screens.

c. Seventy-seven percent of total operation and maintenance cost, which is the average percentage the chemicals cost at Milwaukee and Racine.

Note: ¢/1,000 gal. x 0.264 = ¢/1,000 liters

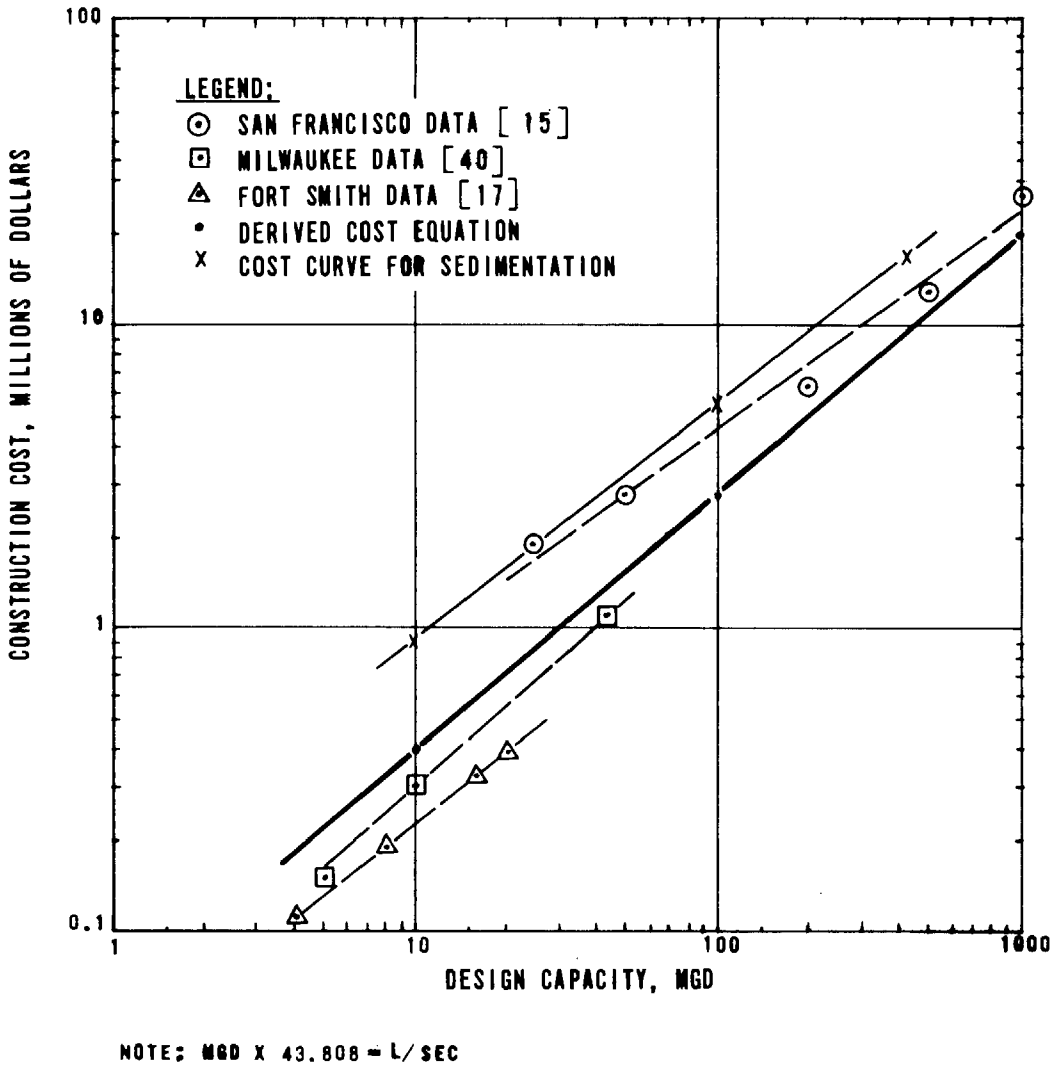

Figure 45. Construction cost versus design capacity for dissolved air flotation, ENR 2000

one-half those for sedimentation with both yielding approximately 60 to 70 percent SS removal. The operation and maintenance costs are not so well defined. The average operation and maintenance cost value reported was $0.017/1,000 l ($0.066/1,000 gal.).

SCREENS

Introduction

Screens of almost all sizes are effective in removing suspended material. The range in sizes is from 3-inch clear openings (bar screens) to openings as small as 15 microns (stainless steel woven microscreens). To facilitate the following discussion, screens have been divided into four classifications, as shown in Table 41: (1) bar screens, (2) coarse screens, (3) fine screens, and (4) microscreens.

Bar Screens and Coarse Screens – No special studies have been made to evaluate these two types of screens in relation to combined sewer overflows. The bases for design should be

Table 41. CLASSIFICATION OF SCREENS

Classification	Mesh	Opening	
		Inches	Microns
Bar screens (> 1 in.)	--	3.0	--
	--	2.0	--
	--	1.050	--
Coarse screens (1 to 3/16 in.)	--	0.742	--
	--	0.542	--
	--	0.371	--
	3	0.263	--
	4	0.185	--
Fine screens (3/16 to 1/250 in.)	6	0.131	--
	8	0.093	--
	9	0.078	--
	10	0.065	1,651
	14	0.046	1,168
	20	0.0328	833
	28	0.0232	589
	35	0.0164	417
	48	0.0116	295
	60	0.0097	246
	80	0.0075	180
	100	0.0058	147
	150	0.0041	104
Microscreens (< 1/250 in.)	230	0.0026	65
	400	0.0015	38
	--	0.0009	23

Note: in. x 2.54 = cm

the same as for their use in dry-weather treatment facilities. The reader is referred to the literature for the necessary details [25]. Except for bar screens, their use for combined sewer overflows may be limited. Coarse screens are used as a pretreatment and protection device at the Cottage Farm Detention and Chlorination Facility in Boston. Bar screens are recommended for almost all storage and treatment facilities and pump stations for protection of downstream equipment. Typical screenings from a 1-inch bar screen are shown on Figure 46.

Fine Screens and Microscreens – Fine screens and microscreens are discussed together because in most cases they operate in a similar manner. The types of units found in these classifications are rotating fine screens, hereinafter referred to as drum screens; microscreens, commonly called microstrainers; rotary fine screens; and hydraulic sieves (static screens); vibrating screens; and gyratory screens. To date, vibrating screens and gyratory screens have not been used in prototype combined sewer overflow treatment facilities.

Description of Screening Devices

Microstrainers and Drum Screens – The microstrainer and drum screen are essentially the same device but with different screen aperture sizes. A schematic of a typical unit is shown on Figure 47. They are a mechanical filter using a variable, low-speed (up to 4 to 7 rpm), continuously backwashed, drum rotating about a horizontal axis and operating under gravity conditions. The filter usually is a tightly woven wire mesh fabric (called screen) fitted on the drum periphery in paneled sections. The drum is placed in a tank, and wastewater enters one end of the drum and flows outward through the rotating screen. Seals at the ends of the drum prevent water from escaping around the ends of the drum into the tank. As the drum rotates, filtered solids, trapped on the screen, are lifted above the water surface inside the drum. At the top of the drum, the solids are backwashed off the screen by high-pressure spray jets, collected in a trough, and removed from the inside of the drum. In most cases, both the rotational speed of the drum and the backwash rate are adjustable. Backwash water is usually strained effluent. The newer microstrainers use an ultraviolet light irradiation source alongside the backwash jets to prevent growth of organisms on the screens [36]. The drum is submerged from approximately two-thirds to three-quarters of its diameter.

As noted previously, the usual flow pattern is radially outward through the screen lining the drum; however, one drum screen application used a reverse flow pattern [41].

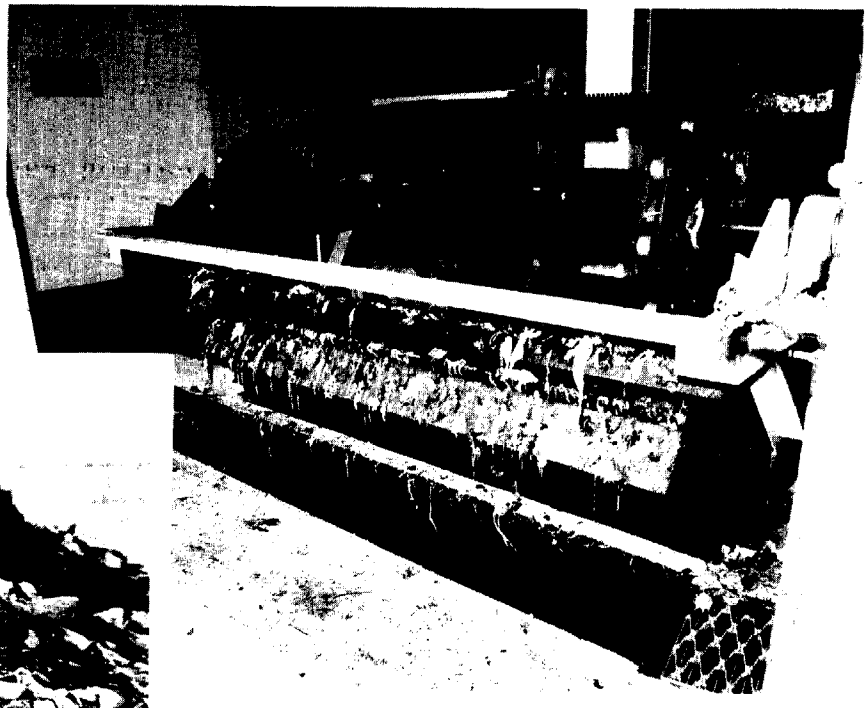

(a)

(b)

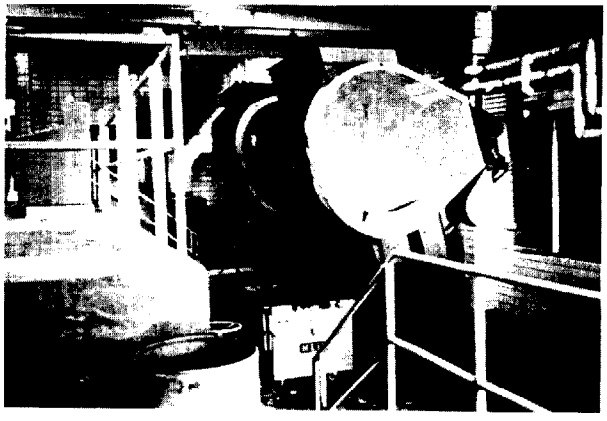

(c)

Figure 46. Screenings from mechanically cleaned bar racks

(a) View of screenings from 1.9 cm (3/4-in.) clear opening rack and sluice trough for return to interceptor (Boston). These screens are preceded by coarse 10.1 cm (4-in.) clear opening trough rack (b) Screenings from 2.5 cm (1-in.) clear opening rack at Racine (c) Mechanically cleaned bar screens with 2.5 cm (1-in.) clear openings at Spring Creek (New York City)

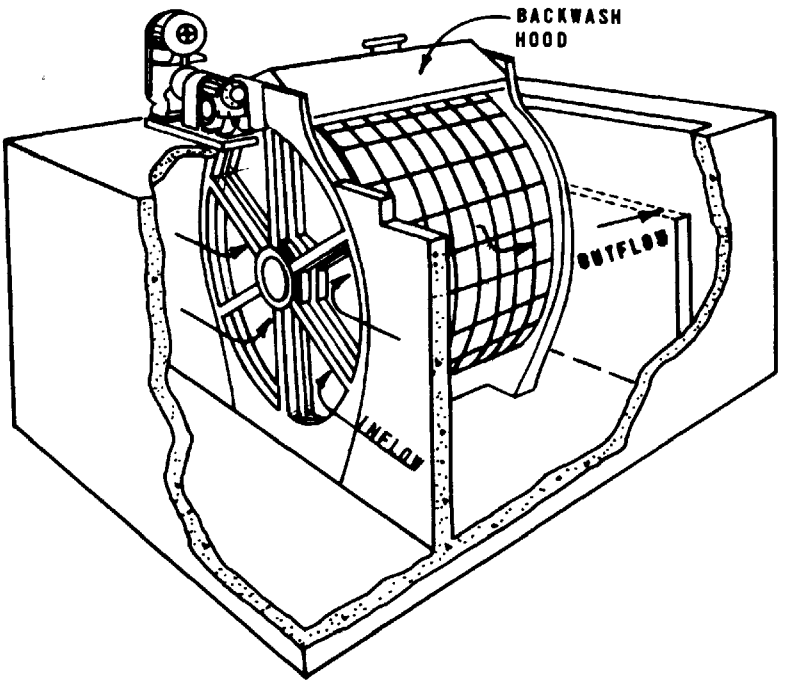

Figure 47. Schematic of a microstrainer or drum screen

The drum was completely submerged within an influent tank, and flow passed inward through the circumference of the drum. Submerged backwash jets were placed inside the drum.

Screen openings for microstrainers range from 15 to 65 microns and for drum screens, from 100 to 600 microns. The various sizes of screen openings that have been tested on combined sewer overflows, and other data, are listed in Table 42.

Microstrainers and drum screens can be used in many different treatment schemes. Their versatility comes from the fact that the removal efficiency is adjustable by changing the aperture size of the screen placed on the unit. The primary use of microstrainers would be in lieu of a sedimentation basin to remove suspended matter. They can also be used in conjunction with chemical treatment, such as ozone or chlorine for chemically disinfecting/oxidizing both organic and nonorganic oxidizable matter or microorganisms

Table 42. MICROSTRAINER AND DRUM SCREEN INSTALLATIONS IN THE UNITED STATES THAT TREAT COMBINED SEWER OVERFLOWS

Location	Type of device	Size		Screen opening, microns	Flow, mgd	Use of strainer
		Diameter, ft	Length, ft			
Philadelphia, Pa.[a] [26, 27]	Microstrainer	5	3	23, 35	0.43	Main treatment
Mt. Clemens, Mich.[b] [33, 32]	Microstrainer	6	6	21	1	Filters oxidation pond effluent
Milwaukee, Wis.[a] [40]	Drum screen	7-1/2	6	297	5	Pretreatment to dissolved air flotation
Cleveland, Ohio[a] [22]	Drum screen	4	1	420	∿1.3	Pretreatment to dual-media filtration
East Providence, R.I.[c] [41]	Drum screen	40 sq in.[d]		150, 190, 230	0.0086	Main treatment

a. Pilot.

b. Prototype.

c. Bench scale.

d. Screening area.

Note: ft x 0.305 = m
mgd x 43.808 = l/sec
sq in. x 6.452 = sq cm

by removing excess solids prior to the disinfection/oxidation step [26, 40, 27]. They have also been used as polishers for treatment plant effluent. The drum screens are used as pretreatment devices prior to other treatment units. Two such examples are: (1) pretreatment for dissolved air flotation, removing coarser solids to reduce the amount of SS settling out in the dissolved air flotation units [40]; and (2) pretreatment for dual-media filtration or other filtration processes [22].

Many microstrainer and drum screen installations are in operation. Although not all of these installations treat combined sewer overflows, results of studies indicate that the development of the microstrainer and drum screens is fairly complete, and major problems with the units most likely have been solved.

Efficiency – The removal efficiencies are affected by two mechanisms: (1) straining by the screen and (2) filtering of smaller particles by the mat deposited by the initial straining [37, 13]. The governing mechanism is the

size of the screen openings because this determines the initial size of particles removed. The efficiencies of a microstrainer and drum screens treating a waste with a normal distribution of particle sizes will increase as the size of screen opening decreases. Suspended solids removals reported in various studies within the United States bear this out, as shown on Figure 48 [41, 26, 40, 22, 35, 27, 23]. In reality, however, removals are based on the relative sizes between the screen opening and the particle size. A drum screen with a large screen opening can achieve high removals if the majority of the solids in the waste flows are larger than the screen opening. It appears important not to pump ahead of microstrainers because this tends to break up fragile particles and thereby reduce removal efficiencies. The use of positive displacement pumps or spiral pumps may be permissible.

The second most important condition affecting removal efficiencies, especially for microstrainers, is the thickness of filtered material on the screen. Whenever the thickness of this filter mat is increased, the suspended matter removal

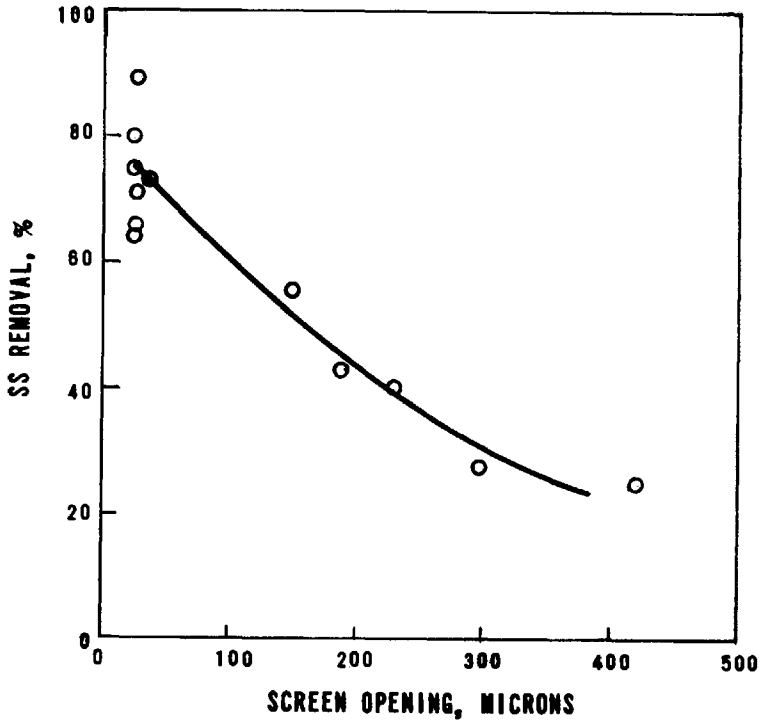

Figure 48. SS removal versus screen opening

will also increase because of the decrease in effective pore size and the filtering action of the filtered mat [23, 26, 27, 13]. This condition was first observed when the influent waters had a high concentration of suspended matter [27]. To create a thicker filter mat on the screens, low drum speeds are used so that the SS loading on the screen is increased [26, 27, 23].

In recent studies using microstrainers, automatic drum speed controls that are proportional to the headloss across the screen have been used [26, 27]. More sophisticated controls are not usually warranted on combined sewer overflow facilities. The high headloss is related to a thicker mat and increased removal efficiencies. Backwash control also is used sometimes [40]. Backwash is turned off during times of low solids loading and activated when the loadings increase the headloss. High head differentials may create problems, however, by producing shear forces great enough to break apart the fragile particles and flocculant material, resulting in lower removal efficiencies by allowing the particles to pass through the screen [13, 6]. Also, the microscreens and fine screens must be designed to withstand these increased head differentials [30].

Microstrainers and fine screens remove from 25 to 90 percent of the SS and from 10 to 70 percent of the BOD_5, depending on the size of screens used and the type of wastewater being treated. Microstrainers generally achieve approximately 70 and 60 percent SS and BOD_5 removals, respectively. Fine screens generally remove about 38 and 16 percent SS and BOD_5, respectively. Most data reported in various studies conducted throughout the United States indicate a broad range of removal rates. Additional studies on combined sewer overflow strainers are warranted before removal efficiencies can be predicted with any degree of accuracy, particularly with respect to organic pollutants [26, 27].

Filter aids – Although coagulants have not been studied extensively in conjunction with microstrainers, it has been reported that ferric chloride can improve removal efficiencies [31]. In one study alum was used for phosphorus removal and to increase suspended matter removal by producing a floc. This test was unsuccessful because the alum floc was extremely small and very fragile, and as a result it washed through the microstrainer [23]. In another pilot-scale study presently underway, the use of alum-ferric chloride appears to be proving unsuccessful. However, by using approximately 2 mg/l of cationic polymer (Betz 1150 and Atlasep 105C) the effluent quality is being improved with respect to SS concentrations with an increased flux rate of 97.7 cu m/hr/sq m (40 gpm/sq ft). These results are

preliminary and more work is needed to verify them at a larger scale and at the Philadelphia pilot plant site.

Screen cleaning – Of the several conditions which affect the operation of the microstrainer and drum screen, the most notable is proper cleaning of the screen. Spray jets, located on the outside of the screen at the top of the drum, are directed in a fan shape onto the screen. It has been found that the pressure of this backwash spray is more important than the quantity of the backwash [13, 6]. There does not seem to be any relationship between the volume of backwash water applied and the hydraulic loading of the microstrainer or drum screen. Thus, a constant backwash rate can be applied regardless of the hydraulic loading [23]. Results of tests at Philadelphia have indicated no backwashing problems.

Occasionally the microstrainer and, to a lesser degree, the drum screen cannot be effectively cleaned by the backwash jets. This condition, called "blinding" of the screen, is generally associated with oil, grease, and bacterial growths [13, 41, 23, 6]. Oil and grease cannot be removed effectively without using a detergent or other chemical, such as sodium hypochlorite, in the backwash water [6]. Generally, microstrainers and drum screens with the finer screen openings (<147 microns) should not be used in situations where excessive oil and grease concentrations are likely to be encountered from a particular drainage area. Bacterial growths also have caused blinding problems on microstrainers, although they have not been a major problem with drum screens. The use of ultraviolet light is an effective means of control, as mentioned previously. It is important, however, to use an ultraviolet light source of the proper frequency designed to minimize the amount of ozone created [29]. With proper construction of the microstrainer it is possible to reduce the chances of the creation of ozone [26].

Screen life – In a wet environment, ozone is relatively corrosive to the stainless steel screens. Since screens are woven with very fine stainless steel wires, the amount of corrosion needed to break through a strand of the wire is small [29]. In fact, it has been reported that ozone in a wet environment is more corrosive to the stainless steel wires than chlorine in a wet environment [29]. Therefore, it is important to reduce the concentration of ozone and/or chlorine in and around the microstrainer. Both chlorine and ozone have been used upstream of the microstrainer, but enough detention time has been allowed so that concentrations of these chemicals are relatively low. It is better

to use post-chlorination or ozonation rather than prechlorination or ozonation to prevent corrosion and for better disinfection, too. The screen life in an uncontrolled ozone environment is 3 to 5 years assuming continuous use.

In properly designed units, stainless steel screens will last 7 to 10 years. A monel screen may last three times this period.

Design parameters – The design parameters for the microstrainer and drum screens are generally limited to screen opening (aperture), flux rate (gpm/sq ft of submerged screen area), headloss across the screen, drum rotational speed, volume and pressure of backwash water, and the type of automatic controls available (Table 43). Recommended values for these parameters are outlined in Table 44. For microstrainers the size of screen openings would normally be either 23 or 35 microns. For drum screens operating as pretreatment to the main type of treatment, the reported screen openings range from 150 to 420 microns.

It has been found, however, that designing a microstrainer installation cannot be done by a simple rating term, such as flux rate, to determine the number of square feet required [6]. Instead, the screen size, volume and type of waste, SS concentration, and other factors must also be taken into consideration.

Rotary Fine Screens – Rotary fine screens are somewhat similar to the microstrainer and drum screen in that tightly woven wire mesh fabric fitted around a drum is used to strain the waste. However, the drum of the rotary fine screen rotates about a vertical axis at high speeds--between 30 and 65 rpm. The influent, introduced into the center of the rotating drum, is directed along horizontal baffles that distribute the flow evenly to the entire surface of the screen. Flow passing through the screen is discharged to the receiving water or routed for further treatment. The concentrate (the retained solids, plus the portion of the inflow that does not pass through the screen) is returned to the interceptor for further treatment. A schematic of a rotary fine screen is shown on Figure 49. The reported screen opening sizes ranged from 74 to 230 microns. Backwashing to remove the retained solids is done at discrete intervals and is by high-pressure spray jets, approximately 3.52 kg/sq cm (50 psi), on both sides of the screen. The backwash water contains detergent or other cleansing chemicals for improved cleaning. Problems have been reported with grease blinding the screens at the Portland, Oregon pilot plant. Screen life has been reported to be approximately 1,000 operating hours for combined sewer overflow application.

Table 43. DATA SUMMARY ON MICROSTRAINERS AND DRUM SCREENS

Location	Reference number	Screen opening, micron	Screen area: Total, sq ft	Screen area: Submerged, sq ft	Screen area: Submerged, %	Flux rate, gpm/sq ft	Headloss, in.	Backwash: Pressure, psi	Backwash: % of total flow
(1)	(2)	(3)	(4)	(5)	(6)	(7)	(8)	(9)	(10)
Philadelphia, Pa.	[27]	23	9.4	7.4	78	40	23	40	<0.5
	[26]	23	9.4	7.4	78	25	12[a]	40	NA[b]
	[26]	23	47.0	28[a]	60[a]	9.1	4.7[a]	40	NA
	[26]	23	47.0	35[a]	74[a]	6.9	3.6[a]	40	NA
	[26]	35	47.0	35[a]	74[a]	5.4	3.4[a]	40	NA
Milwaukee, Wis.	[40]	297	144.0	72-90	51-64	40-50	12-14 max	1[d]	0.85[e]
Cleveland, Ohio	[22]	420	12.6	NA	NA	100	NA	NA	NA
Lebanon, Ohio	[6]	23	15.0	9	60	~7.0	6 max	NA	5.3
Chicago, Ill.	[23]	23	314.0	NA	NA	6.6	6 max	20-55	3.0
Letchworth, England	[35]	23	47.0	NA	NA	3.1	NA	NA	NA
Lebanon, Ohio	[6]	35	15.0	9	60	~7.0	6 max	NA	5.3
East Providence, R.I.	[41]	150	0.28	0.28	100[f]	18-25	NA	NA	28
	[41]	190	0.28	0.28	100[f]	18-25	NA	NA	28[f]
	[41]	230	0.28	0.28	100[f]	18-25	NA	NA	28

Table 43 continued on page 243.

Table 43. (Continued)

Location (1)	Reference number (2)	Drum speed, rpm (11)	Type of automatic controls (12)	(13)	SS removal, % (14)	BOD_5 removal, % (15)	Type of waste (16)	Use of screen unit (17)
Philadelphia, Pa.	[27]	7 max	Drum speed proportional to headloss	No	66	43	Overflow	Main treatment
	[26]	4.5[a]	Same as above	No	75[a]	0[c]	Overflow	Main treatment
	[26]	2.2[a]	Same as above	No	80[a]	NA	Overflow	Main treatment
	[26]	3.0[a]	Same as above	No	64[a]	69[c]	Overflow	Main treatment
	[26]	1.5[a]	Speed control to keep constant headloss	No	44	40[c]	Overflow	Main treatment
Milwaukee, Wis.	[40]	0.5-5	Drum and backwash activated when headloss ≥6 in.	NA	27	27	Overflow	Primary treatment to dissolved air flotation
Cleveland, Ohio	[22]	NA	NA	No	25	8	Overflow	Primary treatment to dual media filter
Lebanon, Ohio	[6]	3.2 max	None	Some	89	61	Activated sludge effluent	Effluent polisher
Chicago, Ill.	[23]	∿0.7	Idles, drum speed increases when headloss exceeds set value	Some	71	74	Activated sludge effluent	Effluent polisher
Letchworth, England	[35]	NA	NA	NA	48	43	Activated sludge effluent	Effluent polisher
Lebanon, Ohio	[6]	3.2 max	None	Some	73	81	Activated sludge effluent	Effluent polisher
East Providence, R.I.	[41]	16	NA	Yes	54-56	12-21	Synthetic sludge, raw sludge	Main treatment
	[41]	8	NA	Yes	40-46	11-21	Synthetic sludge, raw sludge	Main treatment
	[41]	8	NA	Yes	33-47	11-13	Synthetic sludge, raw sludge	Main treatment

a. From Ref. [14] (Philadelphia).

b. NA = not available.

c. Questionable number.

d. Pressure on screen, average.

e. Backwash activated whenever headloss exceeded 6 in. if continuous 3 percent of total flow.

f. This unit operates totally submerged with flow from outside to inside opposite of the normal microstrainer.

Note: sq ft x 0.0929 = sq m
gpm/sq ft x 0.679 = l/sec/sq m
in. x 2.54 = cm
psi x 0.0703 = kg/sq cm

Table 44. RECOMMENDED MICROSTRAINER DESIGN PARAMETERS FOR COMBINED SEWER OVERFLOW TREATMENT

Screen opening, microns	
Main treatment	23-35
Pretreatment	150-420
Screen material	Stainless steel
Drum speed, rpm	
Maximum speed	5-7
Operating range	0-max speed
Flux rate of submerged screen, gpm/sq ft	
Low rate	5-10
High rate	20-50
Headloss, in.	6-24
Submergence of drum, %	60-80
Backwash	
Volume, % of inflow	<0.5-3
Pressure, psi	40-50
Type of automatic controls	Drum speed proportional to headloss

Note: gpm/sq ft x 0.679 = l/sec/sq m
psi x 0.0703 = kg/sq cm

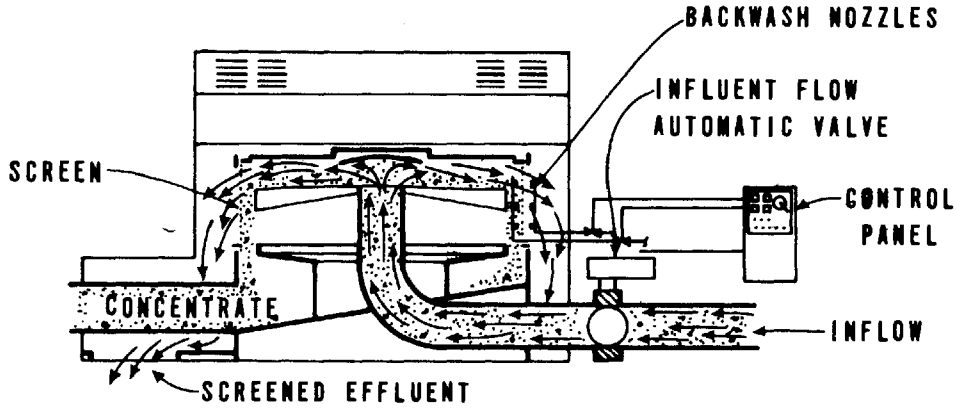

Figure 49. Rotary fine screen schematic [11]

The rotary fine screen was first introduced in the United States in the late 1960s under the trade name of SWECO Centrifugal Wastewater Concentrator unit. It was designed initially as a primary treatment device for municipal sewage and combined sewer overflows. An EPA report on the rotary fine screens, published in 1970, contains a description of their development from the initial concept to what is used today [38].

Efficiency – The removal efficiencies of rotary fine screens are affected by the independent variables similar to those for the microstrainer. The overall performance is a function of screen opening size, rotational speed of the screen, strength and durability of the screen material, and backwash operation. Removal efficiencies generally increase as the size of opening decreases,as with the microstrainer; on the other hand, efficiencies decrease as the volume of feed applied to the screen increases, which is opposite to what would be expected with a microstrainer [38]. The decrease in efficiencies is probably caused by the higher forces on the particles being removed by the rotary fine screen. The thickness of the filtered mat apparently is not a factor here. Although the removal efficiencies are not significantly affected by the rotational speed of the screen, the hydraulic efficiency increases as the rotational speed increases, as the mesh of the collar screen becomes coarser, and as the velocity of the feed approaching the screen increases [38]. Thus, the screen rotational speed should be as high as possible without incurring other detrimental effects. This limiting speed is approximately 60 rpm for a 1.52-meter (5 foot) diameter drum or around 4.9 m/sec (16 fps). At higher rotational speeds the screen material ruptures because of overstressing.

Removal efficiencies ranged from 60 to 90 percent for settleable solids, 30 to 32 percent for suspended solids, and 16 to 25 percent for COD [38, 11].

The initial hydraulic efficiency (i.e., the fraction of influent water passing through the rotating screen) ranged between 85 and 90 percent. The hydraulic efficiency is highest immediately following backwashing, then slowly decreases until the concentrate flow rate reaches a preset value at which time backwash is initiated. It was reported that the average hydraulic efficiency of 85 percent at the beginning of a screening run decreased to an average of 72 percent just prior to backwashing [11]. Thus the screened solids removed (averaging 55 percent of the settleable solids, 27 percent of the SS, and 16 percent of the COD) were concentrated into approximately 20 to 25 percent of the total flow.

Screen cleaning – In the studies conducted on the rotary fine screen [38, 11], blinding (clogging of the screen) has been a problem. Blinding has been attributed to oil, grease, and industrial waste from a paint manufacturer. This problem is similar to that experienced during the development of microstrainers. The latest study at Shore Acres, California, solved this problem by enforcing an industrial waste ordinance prohibiting discharge of oil wastes to the sewer system.

To improve backwashing, a solution of hot water and liquid solvent or detergent has been found necessary to obtain effective cleaning of the screens. This may have been necessary only because of the nature of the common waste encountered in both studies [38, 11]. Of the solvents tested, acidic and alcoholic agents did not adequately clean the screens. Alkaline agents were reported not effective by Portland [11], but Cornell, Howland, Hayes & Merryfield [38] reported a caustic solution was the most efficient solvent. Chloroform, solvent parts cleaner, soluble pine oil, ZIF, Formula 409, and Vestal Eight offered limited effectiveness. ZEP 9658 cleaned the screens effectively, but this cleaner was not analyzed to determine its effect on effluent water quality. The removal of paint was done effectively only by hand cleaning using ZEP 9658.

Screen life – In the first study [38], the average screen life was approximately 4 hours. In a study conducted a year later [11] using a similar unit incorporating a new screen design and a rotational speed of 65 rpm, the average screen life was 34 hours. Reducing the rotational speed to 55 rpm increased the average screen life to 346 hours. Results of a subsequent study at Shore Acres, California, indicate that screen life may exceed 1 year. This extended life, however, is most likely attributable to the much lower hydraulic loading rate, 39.5 versus 123 l/sec (0.9 versus 2.8 mgd) or 30 versus 97 l/sec/sq m (44 versus 143 gpm/sq ft). The present predicted screen life is 1,000 hours. Some screen failures were attributed to punctures caused by objects present in the feed waters.

Design parameters – The design and operating parameters of the rotary fine screen are presented in Table 45. No mathematical modeling of the rotary fine screen has been performed. Further tests of the rotary fine screen are needed to determine more accurately the life of the screens, the removal efficiencies, and design parameters.

Two points should be remembered with respect to rotary fine screens: (1) waste flows from the rotary fine screen range from 10 to 20 percent of the total flow treated and may contain solvents that may be difficult to treat downstream;

Table 45. ROTARY FINE SCREEN DESIGN PARAMETERS

Screen opening, microns	74-167
Screen material	Stainless steel (tensile bolting cloth)
Peripheral speed of screen, fps	14.4-15.7
Drum speed, rpm	30-65
Flux rate, gpm/sq ft	100-122
Velocity of feed water striking screen, fps	9-12
Hydraulic efficiency, % of inflow	80-93
Backwash	
Volume, % of inflow	0.02-2.5
Pressure, psi	50
Temperature, deg C	77
Backwash solvents	ZEP 9658
Solvent dilution in backwash water	800:1-10:1
Treatment cycle times	4-1/2 min ON, 1-2 min OFF for backwashing

Note: fps x 0.305 = m/sec
gpm/sq ft x 0.679 = l/sec/sq m
psi x 0.0703 = kg/sq cm

and (2) the rotary fine screen requires a nearly fixed rate of flow. Thus a battery of many parallel units is required to treat combined sewer overflows.

Hydraulic Sieve – The hydraulic sieve, ranging in screen sizes from 8 to 60 mesh, consists of a fixed flat screen inclined at 25 to 35 degrees from the vertical and a header box that directs the flow in a flat sheet down the width of the screen. The liquid portion of the waste passes through the screen, and the strained solids are allowed to roll down to the base of the screen [21]. The solids are collected in a relatively dry form. The wires making up the screen are placed in the horizontal direction with a spacing between 290 to 1,600 microns.

The system was designed to remove relatively durable solids larger than the screen opening. To prevent clogging, the solids collected require some form of transportation other

than pumping if resuspension in water is to be avoided. This is one of the screening methods currently being tested for combined storm overflows at Fort Wayne, Indiana [28, 43]. The installed units are to handle 767 l/sec (17.5 mgd) using screens with openings of 1,525 microns (0.060 inch).

Advantages and Disadvantages – The four basic screening devices have been developed to serve one of two types of applications. The microstrainer is designed as a main treatment device that can remove most of the suspended contaminants found in a combined sewer overflow. The other three devices--drum screens, rotary fine screens, and hydraulic sieves--are basically pretreatment units designed to remove the coarser material found in waste flows. The advantages and disadvantages of each type are listed in Table 46.

Description of Demonstration Projects

Philadelphia, Pennsylvania – The use of a microstrainer to treat combined sewer overflows has been studied in Philadelphia [26, 27]. The facility includes microstraining and disinfection. The microstrainer was a 5-foot diameter by 3-foot long unit using either 35- or 23-micron screen openings during the various tests conducted. The drum was operated submerged at 2/3 of its depth. The complete unit was equipped to automatically control drum speed proportional to the headloss across the screen, with continuous backwash, and with an ultraviolet irradiation source to prevent fouling of the screen by bacterial slimes. The unit starts automatically whenever sufficient overflow occurs. Because of the physical configuration of the sewer, flow was pumped to the microstrainer. However, it is recommended that pumping be avoided whenever possible since large solids that would be readily removed by microstraining are broken up by the pumping. The study was conducted in three phases: (1) operation of full screen area using the 35 micron screen, (2) operation at full screen area using 23 micron screen, and (3) operation at 20 percent of the screen area using the 23 micron screen. The latter was to test increased loading rates since the facility had a limited pumping capacity. The facilities operated approximately 40 times per year on combined sewer overflows.

Milwaukee and Racine, Wisconsin [40] – The use of fine screens to remove most of the coarse solids at Milwaukee and Racine has been briefly described previously under Dissolved Air Flotation. One unit was used at Milwaukee and six are used at Racine. They operate at a continuous

Table 46. CHARACTERISTICS OF VARIOUS TYPES OF SCREENS

	Microstrainer	Drum screen	Rotary fine screen	Hydraulic sieve[a]
Principal use	Main treatment	Pretreatment to other devices and main treatment	Pretreatment to other devices and main treatment	Pretreatment to other devices
Approximate removal efficiency, %				
BOD	50	15	15	--
SS	70	40	35	--
Land requirements, sq ft/mgd	~ 15-20	15-20	24-62	20
Cost, $/mgd[b]	12,000	4,800	8,000	5,600
Can be used as a dry weather flow polishing device	Yes	No	No	No
Automatic operation	Possible with controls	Possible with controls	Possible with controls	No controls needed
Able to treat highly varying flows	Yes	Yes	Some limitation	Yes
Removes only particulate matter	Yes	Yes	Yes	Yes
Requires special shutdown and startup regimes	Yes	Some	Some	No
Screen life with continuous use	7-10 yr	10 yr	1,000 hr	20 yr
Uses special solvents in backwash water	No	No	Yes	No
High solids concentrate volume, % of total flow	0.5-1.0	0.5-1.0	10-20	< 0.5

a. Information on hydraulic sieves is limited. Formal study on treatment of combined sewer overflows is just beginning.

b. Based on a 25-mgd plant capacity.

Note: sq ft/mgd x 2.12 = sq m/cu m/sec

$/mgd x 0.38 = $/cu m/sec

drum speed with backwashing activation whenever headloss exceeds 6 inches. Collected solids are discharged to the float holding tanks. The screen size used in both cases was 297 microns.

Cleveland, Ohio [22] – The Cleveland, Ohio, study on dual-media filtration also included a fine screen as a pretreatment unit to the filtration process. The 420 micron screen was fitted over a 1.2 sq m (12.6 sq ft) drum unit. Drum speed and backwash conditions were not reported. More details on the layout of the facilities are given in this section under Filtration.

East Providence, Rhode Island [41] – This bench-scale study was conducted to test the applicability of using a drum screen and a diatomaceous earth filter in series to achieve significant removals when operating on combined sewer overflow. The study indicated good removals by the screening device in relation to other drum screens. The screening unit, however, was of different configuration than other drum screens. The device used was a small 259 sq cm (40 sq in.) unit consisting of a submerged rotating drum with the flow passing through the screen from the outside to the inside. Effluent was drawn off from the interior of the rotating drum. The backwash system ran continuously using submerged spray jets directed at the interior of the screen dislodging strained solids and allowing them to pass through ports separating dirty water from the rest of the influent water. Synthetic sewage was used during the study. Screen apertures tested were 150, 190, and 230 microns in size.

Portland, Oregon [38, 11] – A rotary fine screen unit was tested in Portland, Oregon, on both dry-weather flow and combined sewer overflows. The facility was constructed on a 183 cm (72-inch) diameter trunk sewer serving a 10,000-ha (25,000-acre) area. A portion of the flow was diverted to a bypass line where it first flowed through a bar screen before being lifted into the demonstration project by two 132 l/sec (2,100 gpm) turbine pumps. After passing through the rotary fine screen, both the concentrated solids and the effluent were returned to the Sullivan Gulch Pumping Station wet well. In a typical installation on a combined sewer overflow line, the effluent from the screens would pass to a receiving stream after disinfection. The concentrated solids would be returned to an interceptor sewer. The screening unit used a 152 cm (60-inch) diameter drum with 74, 105, and 167 micron screens. The units were operated at flow rates ranging from 43.2 to 126.2 l/sec (1 to 2.8 mgd). The range and levels of variables tested is listed in Table 47.

Table 47. RANGE AND LEVEL OF VARIABLES TESTED [38]

Variable	Range investigated	Level of best performance
Screen material	Dacron cloth, market grade Stainless steel fabric Tensile bolting cloth	Tensile bolting cloth
Screen mesh	105 to 230 (167 to 74 micron opening)	165 (105 micron opening)
Screen rotational speed, rpm	30 to 60	60
Influent flow rate, gpm	700 to 2,000	1,700
Screen hydraulic loading, gpm/sq ft	50 to 143	122
Velocity of feed water striking screen, ft/sec	3 to 12	11
Type of operation	Intermittent to continuous	4-1/2 min ON, 1/2 min OFF for backwash
Backwash ratio (gal. backwash water/1,000 gal. applied waste)	0.2 to 25.6	0.235

Note: gpm x 0.0631 = l/sec
gpm/sq ft x 0.679 = l/sec/sq m
ft/sec x 0.305 = m/sec
gal. x 3.785 = l

After several modifications of the screening units, the present configuration was finalized. In the final form the reported performance criteria were [38]:

Floatable solids removal	100%
Settleable solids removal	98%
Total suspended solids removal	34%
COD removal	27%
Screened effluent as % of influent	92%

Fort Wayne, Indiana [28] — Fort Wayne is a newly constructed screening facility designed to compare three types of screens: (1) fine screen, (2) rotary fine screen, and (3) static screens. The three units operate in parallel with first and last units each handling 767 l/sec (17.5 mgd) and the rotary fine screen handling 1,752 l/sec (40 mgd) for a total of 3,286 l/sec (75 mgd). The fine screen is a 3.7-meter by 3.7-meter (12-foot by 12-foot) unit with a 147-micron screen. Some headloss controls are provided. The rotary fine screen portion of the project

has eight 152-cm (60-inch) diameter units operating in parallel. They are to be operated sequentially to accommodate flow variation. The screen size is 105 microns. Twelve static screens using 1,525-micron (0.06-inch) clear opening screen represent the third portion of the facility. These are the manufacturer's standard units that have been used in industry to remove gross solids. A description of a typical unit was presented above. The combined sewer overflow facilities are located across the Maumee River from Fort Wayne's sewage treatment plant. Flows entering the facilities are sewage treatment plant bypass and combined sewer overflows. These flows are lifted to the screens by pumps after passing through a bar screen. Chlorination and a contact tank are provided.

Costs

Microstrainers and Drum Screens — The costs reported for microstrainers vary considerably, as shown in Table 48. The main reason is the variation in flux rates or loading coupled with the type of waste treated (i.e., combined sewer overflows versus secondary effluent) [30]. With the exception of the Philadelphia facility, all of the microstrainers are used to treat sewage effluent at appreciably lower flux rates which necessarily increased the cost. During the Philadelphia study it was found possible to use a flux rate of 73.3 cu m/hr/sq m (30 gpm/sq ft); therefore, the costs at the three other locations listed in Table 48 have been modified to reflect this increase in loading rate. According to the figures presented in Table 48, the average capital cost is approximately $248/l/sec ($11,000/mgd) for treating combined sewer overflows. The operation and maintenance costs have not been adjusted. The approximate cost is $0.0013 to $0.0026/1,000 l ($0.005 to $0.01/1,000 gal.) for assuming 300 hours of operation per year. The single capital cost cited for a fine screen is only the equipment cost and does not include installation. Operation and maintenance costs should be comparable to those for microstrainers.

Rotary Fine Screens — Cost data for rotary fine screens for combined sewer overflows are based on a preliminary design estimate for a screening facility in Seattle, Washington, and actual construction costs at Fort Wayne, Indiana [38, 28]. The two costs were $700,000 and $250,000, for plants of 1,095 l/sec (25 mgd) and 1,640 l/sec (37.5 mgd), respectively. The differences in cost are due, in part, to the fact that the Fort Wayne installation is a demonstration prototype project where three types of screens operating in parallel are treating a total flow of 3,285 l/sec (75 mgd) in a single building. The cost for the rotary fine screen

Table 48. COST OF MICROSTRAINERS AND FINE SCREENS FOR 25-MGD PLANTS[a]

	Influent source	Loading rate, gpm/sq ft	Capital cost[b]	Modified capital cost[c]	Operation and maintenance cost	
					Annual	¢/1,000 gal.
Microstrainers						
Philadelphia, Pa. [26]	Combined sewer overflow	30	$ 283,500	$283,500	$ 490	0.19
Taft Institute [37]	Activated sludge effluent	16	382,800	245,000	1,480	0.57
Hypothetical [13]	Sewage effluent	5-10	1,180,800	354,000	2,620	1.01
Chicago, Ill. [23]	Activated sludge effluent	6.6	1,556,600	411,000	2,580	0.99
Fine screens (drum)						
Fort Wayne, Ind. [28]	Combined sewer overflow	--	119,000[d]	--	--	--

a. ENR = 2000.

b. Installed.

c. Based on a loading rate of 25 gpm/sq ft.

d. Equipment cost only.

Note: ¢/1,000 gal. x 0.264 = ¢/1,000 liters
mgd x 43.808 = l/sec
gpm/sq ft x 0.679 = l/sec sq m

has been separated and does not include the pump station cost. The Seattle estimate is for a complete facility including pumping. The estimated operation and maintenance costs are approximately $0.0066/1,000 l ($0.025/1,000 gal.).

Hydraulic Sieve – At the time this text was prepared, no actual prototype combined sewer overflow treatment facilities including hydraulic sieves had been completed. However, one such facility was under construction at Fort Wayne, Indiana. At that site, the capital cost of the hydraulic sieve units, including a proportionate amount of the building cost scaled up to 1,095 l/sec (25 mgd) capacity, is $138,000 [28].

FILTRATION

Introduction

In the physical treatment processes, filtration is one step finer than screening. Solids are usually removed by one or more of the following removal mechanisms: straining, impingement, settling, and adhesion. Filtration has not been used extensively in wastewater treatment, because of rapid clogging which is principally due to compressible solids being strained out at the surface and lodged within the pores of the filter media. In stormwater runoff, however, a large fraction of the solids are discrete, noncompressible solids that are more readily filtered [30].

Effluents from primary or secondary treatment plants and from physical-chemical treatment facilities contain compressible solids.

The discussion on filters handling discrete, noncompressible solids is presented here.

Design Criteria

Two factors affecting removal efficiency are flux rate and the type of solids. As one would expect, the removals are inversely proportional to the flux rate. At high flux rates, solids are forced through the filters reducing solids removal efficiency. Suspended solids removals were found to be better for inert solids (discrete, noncompressible solids) than for volatile solids (compressible solids). This is the same conclusion found for microstrainers.

Loading Rates – The difference between filtering compressible and noncompressible solids is basically the flux rate used. High-rate filters handling compressible solids are normally loaded at 12.2 to 24.5 cu m/hr/sq m (5 to 10 gpm/sq ft), whereas those handling noncompressible solids will filter at rates up to 73.4 cu m/hr/sq m (30 gpm/sq ft).

Chemicals – Many polyelectrolytes and some coagulants have been tested. Some polyelectrolytes have been found which increase removals of phosphorus and nitrogen. It is cautioned, however, that polyelectrolytes are noted for their unpredictability and the most effective polyelectrolyte must be determined for each wastewater.

Demonstration Projects

Studies have been made to investigate possible filtration techniques for combined sewer overflows. The different

methods attempted and general comments as to their success are listed in Table 49. The most successful was dual-media filtration using anthracite coal over sand with a fine (420-micron) screen as a pretreatment device. The use of the screen reduced the solids loading on the filter giving longer runs. In effect, this was equivalent to a multi-media filter.

Cleveland, Ohio – The successful combined sewer overflow filtration study conducted at Cleveland, Ohio, was the first to use a dual-media filter preceded by a fine screen on non-industrial wastewaters [22]. The filters had a 1.22-meter (4-foot) layer of anthracite coal with an effective size of 4 mm over a 0.92-meter (3-foot) layer of 2-mm effective size sand. The three filters were constructed using 15.2-cm (6-inch) diameter lucite tubes. The test procedure was to pump from an outfall all combined sewer overflows that occurred. The flows were treated by the 420-micron fine

Table 49. TYPES OF FILTRATION PROCESSES INVESTIGATED FOR COMBINED SEWER OVERFLOWS

Filter description	Ref. No.	Type of facility	Remarks
Single-media filtration	--	--	Easily clogged, acts like a strainer.
Mixed-media filtration			
With fine screen pretreatment	[22]	Pilot plant	Successful study with 50-90% removals.
Without pretreatment	[24]	Bench model	Short runs, lower removals.
Coal filtration	[34]	Prototype	Good for coarse solids.
Fiber glass plug filtration	[24]	Bench model	Partly successful, needs more work to verify the results.
Diatomaceous earth filtration	[41]	Bench model	Effective but costly.
Upflow filtration with garnet sand	[24]	Bench model	Unsuccessful.
Ultrasonic filtration using fine screens that are ultrasonically cleaned	[42]	Pilot plant	Unsuccessful.
Crazed resin filtration	[10]	Pilot plant	Unsuccessful.

screen during the overflow event and stored in two 19-cu m (5,000-gal.) tanks for the test filtration runs that followed. Each tank had a mixer to keep solids in suspension. Two pumps were then used to supply the filter with screened water.

Removals for this filter were 65 percent for SS, 40 percent for BOD_5, and 60 percent for COD [22]. The addition of polyelectrolyte increased the SS removal to 94 percent, the BOD_5 removal to 65 percent, and the COD removal to 65 percent. Inorganic coagulants, such as lime, alum, and ferric chloride, did not prove as successful as polymers. Run times averaged 6 hours at loading rates of 58.7 cu m/hr/sq m (24 gpm/sq ft). Backwashing of the filters consisted of alternately injecting air and water into the bottom of the filter columns. Air volume was varied from 38.4 to 283 cu m/hr/sq m (2.1 to 15.5 scfm/sq ft) over 2.5 to 29 minutes. Backwash water volume used ranged from 1.9 to 8.6 percent of the total combined sewer overflow filtered, with a median value of approximately 4 percent. The range of backwash water rate used was 75.8 to 220 cu m/hr/sq m (31 to 90 gpm/sq ft) over 4 to 25 minutes.

A list of the basic design data is presented in Table 50.

Others – Two other filtration processes, fiber glass plug filtration [24] and coal filtration [34], show some promise, but additional research is necessary to perfect them. Other methods, such as crazed resin filtration, upflow filtration with garnet sand, and filtration using ultrasonically cleaned fine screens, have not been successful and are not considered worthy of further effort at the present time.

Advantages and Disadvantages

The advantages of dual-media filtration are that (1) relatively good removals can be achieved; (2) process is versatile enough to be used as an effluent polisher; (3) operation is easily automated; and (4) small land area is necessary. Disadvantages are that (1) costs are high; (2) dissolved materials are not removed; and (3) storage of backwash water is required.

Costs

Cost data were developed from a design estimate for 1.1, 2.2, 4.4, and 8.8 cu m/sec (25, 50, 100, and 200 mgd) filtration plants at a satellite location [22]. The basic plant as envisioned for the cost estimate includes a low lift pump

Table 50. DESIGN PARAMETERS FOR FILTRATION MIXED MEDIA, HIGH RATE [22]

Filtering media	4 ft anthracite coal 3 ft sand #612
Effective size, mm	
Anthracite coal	4
Sand	2
Flux rate, gpm/sq ft	
Design	24
Range	8-40
Headloss, ft	5-30
Backwash	
Volume, % of inflow	4
Air (rate and time), scfm/sq ft, min	10, 10
Water (rate and time), gpm/sq ft, min	60, 20
Filtering aid	
Polyelectrolyte, type	Anionic
Pretreatment	420 micron ultrafine screen

Note: gpm x 0.679 = l/sec/sq m
ft x 0.305 = m
scfm/sq ft x 0.305 = cu m/min/sq m

station, fine screens, chlorination facilities, and dual-media filters with the same configuration as used at Cleveland. Filters would be designed to operate at 58.6 cu m/hr/sq m (24 gpm/sq ft). Effluent water would be used for backwashing. Collected solids from the screens and filters would be returned to the interceptor leading to the sewage treatment plant. The building housing the facilities would be mostly above ground and would be designed to be highly automated, capable of coming on-line automatically with automatic backwash capability. Using this as the basis for the cost estimate and an assumed figure of 300 hours of operation per year to handle combined storm overflows, the capital and operation and maintenance cost would be as shown on page 258.

Plant capacity		Capital cost, $	Operation and maintenance cost, $/yr
cu m/sec	mgd		
1.1	25	1,580,000	44,000
2.2	50	2,390,000	55,000
4.4	100	4,370,000	98,000
8.8	200	7,430,000	129,000

The cost data are based on an ENR of 2000.

The operating costs are estimated to be $0.0382/1,000 l ($0.141/1,000 gal.) for 300 hours of operating per year. The high cost could easily be reduced, however, by designing the system to serve also as a dry-weather effluent polisher during periods with no storm flows.

CONCENTRATION DEVICES

Concentration devices, such as the swirl regulator/concentrator and helical or spiral flow devices, have introduced an advanced form of sewer regulator--one capable of controlling both quantity and quality. These devices have been previously described in Section VIII. A prototype swirl regulator has recently been constructed in Syracuse, New York. A second generation swirl concentrator has been placed into operation as a treatment unit for municipal sewage grit separation in Denver, Colorado. Settleable solids removals ranging from 65 to more than 90 percent, corresponding to chamber retention times of approximately 5 to 15 seconds, have been predicted on the basis of hydraulic model tests. At the time of writing, no operational data were available. Indicated costs are approximately $285/cu m/sec ($6,500/mgd). A third generation swirl device has been developed to take the place of conventional primary sedimentation at 10 to 20 minute detention times.

Section XI

BIOLOGICAL TREATMENT

INTRODUCTION

Contaminants in sewage and stormwater can be removed by physical, chemical, and biological means. As noted previously, physical treatment involves the removal of contaminants through the controlled application of physical forces, as in the case of gravity settling or centrifugation. Unfortunately, because many of the contaminants in sewage are colloidal in size or dissolved, they cannot be removed by physical means. The removal of these contaminants is normally accomplished by chemical or biological means.

In biological treatment, the objective is to remove the nonsettleable colloidal solids and to stabilize the dissolved organic matter. This is normally accomplished by biologically converting a portion of the organic matter present in the sewage into cell tissue, which subsequently can be removed readily by gravity settling. The energy required for the synthesis of cell tissue is obtained from the oxidation of that portion of the organic matter not used for the synthesis of cell tissue. In general, biological treatment can be accomplished aerobically (in the presence of oxygen) or anaerobically (in the absence of oxygen). Typically, aerobic processes are used for the conversion of the organic matter in sewage to cell tissue, and anaerobic processes are used for the conversion of the cell tissue produced to stabilized end-products. In the later case, the cell tissue serves as the food source for the anaerobic bacteria.

The kinetics of biological conversion and growth are governed by the following factors: (1) the rate of substrate (food) utilization, (2) the growth rate of the organisms in the system, (3) the mass of organisms in the system, (4) the length of the contact time between the waste and the organisms, (5) types of organisms, and (6) environmental conditions, such as temperature, pH, nutrients, etc.

Operationally and from a design standpoint, the aforementioned factors are taken into account by considering (1) the food-to-microorganism ratio, (2) the sludge retention time, and (3) the hydraulic detention time.

The food-to-microorganism ratio is defined as the kilograms of BOD_5 (food) applied per unit time (often taken as the amount consumed) per kilogram of organisms in the system. The sludge age is defined by the kilograms of organisms wasted per day. The hydraulic detention time is defined as the value, given in units of time, obtained by dividing the volume of the reaction vessel by the flow rate.

Because the food-to-microorganism ratio and the sludge retention times are interrelated [17], both are commonly used in the design of biological systems. From field observations and laboratory studies, it has been found that as the sludge age is increased and, correspondingly, the food-to-microorganism ratio decreased, the settling characteristics of the organisms in the system are enhanced, and they can be removed easily by gravity settling. Typical values for the food-to-microorganism ratio and sludge age are given in reference [17].

As previously noted, the length of time the biomass is in contact with the waste BOD_5 is measured by the hydraulic detention time. The minimum time to achieve a given removal is dependent upon the food-to-microorganism ratio. Low ratios (i.e., a high number of bacteria per kilogram of BOD_5) allow faster utilization of a given amount of BOD_5. The minimum time required may vary considerably, from 10 to 15 minutes in contact stabilization, or less for trickling filters and rotating biological contactors, and up to 2 to 3 days for oxidation ponds. At the shorter contact times, the biomass only removes the dissolved matter and possibly some of the smaller colloidal matter [15]. At longer contact times, suspended organic matter is utilized.

In any biological system, these factors control the process. A mathematical model has been developed for the activated sludge system [17, 14]. Models for trickling filters, rotating biological contactors, and treatment lagoons have not been formulated. Empirical designs and design parameters are used instead.

APPLICATION TO COMBINED SEWER OVERFLOW TREATMENT

Biological treatment of wastewater, used primarily for domestic and industrial flows of organic nature, produces an effluent of high quality and is generally the least costly

of the process producing similar effluents. For combined sewer overflows, however, it has one serious drawback: the biomass used to assimilate the waste constituents found in waste flows must be either (1) kept alive during times of dry weather or (2) allowed to develop for each storm event. Also, biological treatment processes are upset by erratic loading conditions.

Two methods have been used to keep the biomass alive between storms at combined sewer overflow treatment facilities. The first method is to construct the wet-weather treatment facilities next to a dry-weather plant and to use the excess biomass therefrom as required. Contact stabilization of combined sewer overflows at Kenosha, Wisconsin, operates in this manner. The second method is to have a treatment process which can be used to treat wastewater with a high variation in flow rate and strength. During dry weather, it would be used for domestic flows and combined sewer overflows during wet weather. Trickling filters and rotating biological contactors (at least in EPA demonstration projects) are in this category. Storage of the biomass either in a tank in suspension or on a supporting medium by supplying air and no substrate is not an effective method [24].

The other approach is to store the combined sewer overflows for an extended period of time and allow the biomass to grow large enough to treat the stored flows successfully. Treatment lagoons are an example of this approach.

The more sophisticated schemes, such as the contact stabilization modification of activated sludge, trickling filters, and rotating biological contactors, provide good treatment of the overflows, but all should include storage or equalization ahead of them to prevent hydraulic overloading with attendant biomass washout during wet weather. This adds to the cost. Less sophisticated methods, such as oxidation lagoons, aerated lagoons, and facultative lagoons, require less attention, and the lagoons can act as storage units. Although they may not need dry-weather flow to keep them in operation, they do require more land.

Some other important considerations in the biological treatment of combined sewer overflows are:

1. Most biological treatment processes are familiar to designers and operators even though their application to combined sewer overflow treatment is not.

2. Some of the treatment methods may require pretreatment and entail a continuous cost even during dry weather to keep the biomass alive.

3. Shakedown runs are necessary to keep the units and the usual large number of automatic controls in operating order.

CONTACT STABILIZATION

Description of the Process

Contact stabilization is considered in lieu of other activated sludge process modifications for treating combined sewer overflows, because it requires less tank volume to provide essentially the same effluent quality. The overflow is mixed with returned activated sludge in an aerated contact basin for approximately 20 minutes at the design flow. Following the contact period, the activated sludge is settled in a clarifier. The concentrated sludge then flows to a stabilization basin where it is aerated for several hours. During this period, the organics from the overflow are utilized in growth and respiration and, as a result, become "stabilized." The stabilized sludge is then returned to the contact basin to be mixed with the incoming overflow. A schematic of a contact stabilization plant for treating combined sewer overflows is shown on Figure 50.

Demonstration Project, Kenosha, Wisconsin

A project sponsored by the EPA to evaluate the use of contact stabilization for treatment of combined sewer overflows from a 486-ha (1,200-acre) tributary area is presently underway at Kenosha, Wisconsin [23, 19]. It is an example of how contact stabilization can be used to treat combined sewer overflows using the waste activated sludge from a dry-weather activated sludge plant. At the Kenosha municipal sewage treatment plant, a 101-l/sec (23-mgd) facility, a new combined sewer overflow treatment facility was constructed. This facility consists of an aeration tank, a contact stabilization tank, and a new clarifier. The design capacity of the new facility is 88 l/sec (20 mgd). The stabilization tank, acting as the biosolids reservoir, receives the waste activated sludge from the main plant. This sludge is held for up to 7 days before final wasting. Thus, stabilized activated sludge is kept in reserve ready to treat combined sewer overflows when they occur. Photographs of the facility are shown on Figure 51.

Operation of the contact stabilization plant consists of directing the combined sewer overflow to the contact tank following comminution and grit removal, adding the reserve activated sludge, and then conducting the waste flows to a final clarifier for separation of the biosolids and other

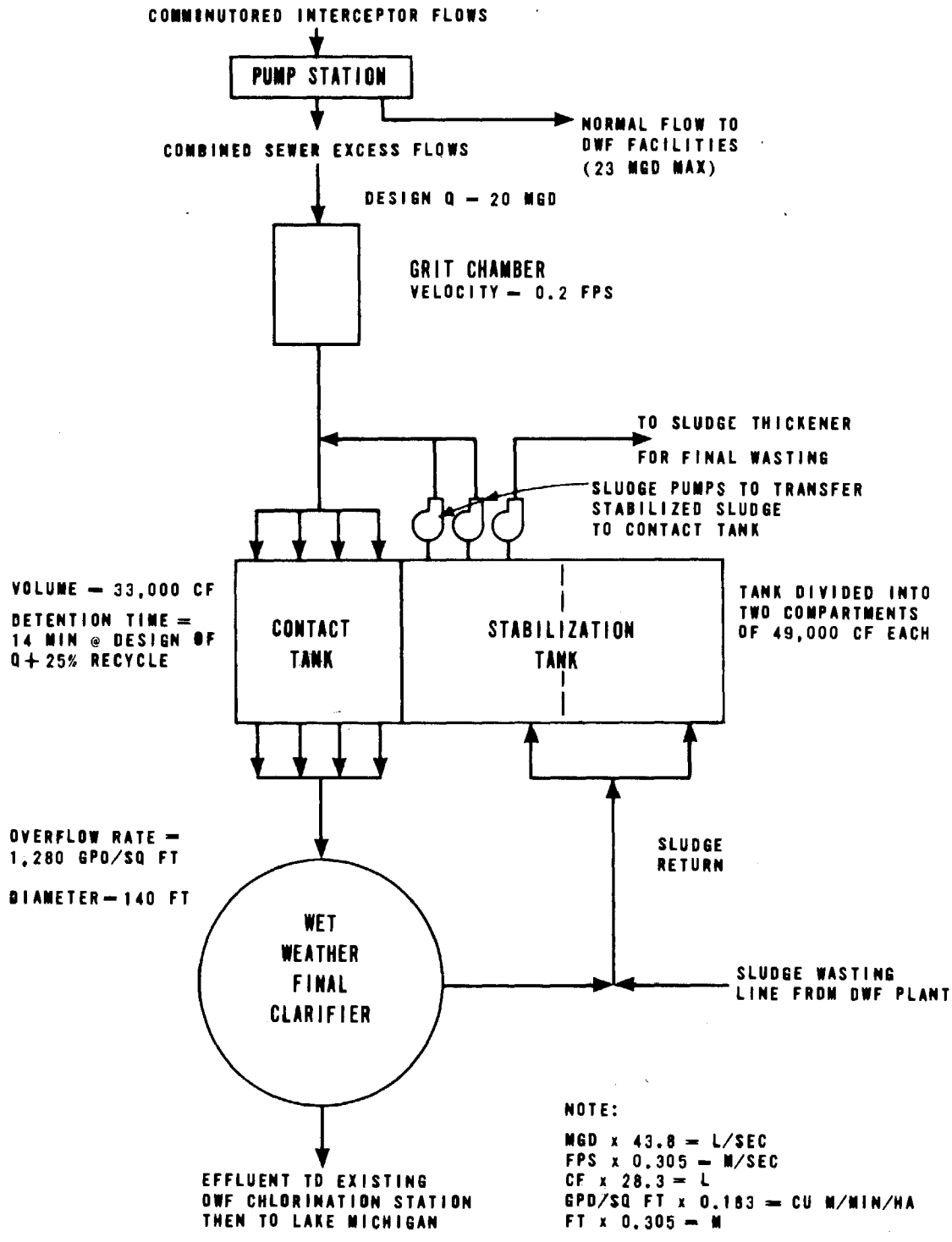

Figure 50. Contact stabilization plant [23]
Kenosha, Wisconsin

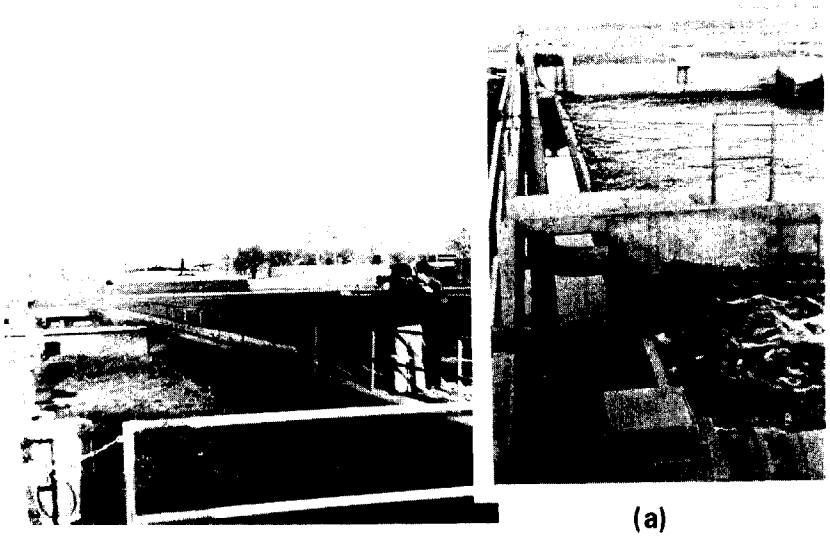

(a)

(b)

(c)

(d)

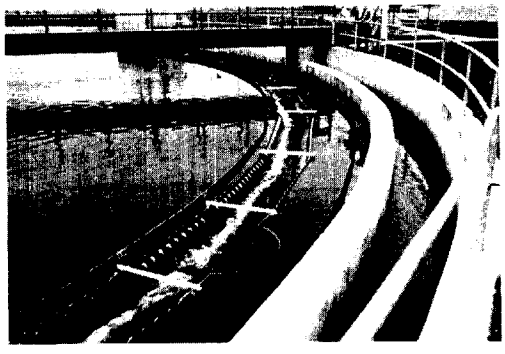

(e)

Figure 51. Combined sewer overflow treatment by contact stabilization (Kenosha)

(a) Contact tank with diffused air (b) Sludge stabilization tanks with floating aerators (c) Floating aerator anchoring and counterweight details (d) Closeup of aerator operation (e) Final contact tank (peripherally fed) and effluent

suspended matter from the final effluent. The solids are returned to the stabilization tank where they are aerated before being pumped back to the contact chamber. The plant has been constructed so that additional activated sludge may be obtained from the main plant, if necessary. During dry weather, the final clarifier is used for added clarification, and consideration has been given to using the stabilization compartment for aerobic digestion of the waste sludge.

Efficiency – The BOD_5 and SS removals achieved during 1972 at Kenosha's combined sewer overflow treatment facilities were 83 and 92 percent, respectively. The overall removals are summarized in Table 51.

Removals under steady-state conditions are directly related to sludge retention time (sludge age), food-to-microorganism

Table 51. CONTACT STABILIZATION REMOVALS DURING 1972 [23]

Parameter	Weighted mean[a] In, mg/l	Out, mg/l	% Removal
Total solids	704	455	35
Total volatile solids	270	140	48
Suspended solids	314	26.4	92
Suspended volatile solids	121	15.2	87
Total BOD_5	102	17.8	83
Dissolved BOD_5	24.1	7.6	68
Total organic carbon	113	22.8	80
Dissolved organic carbon	21.8	15.3	30
Total Kjeldahl - N	11.0	5.5	50
Total PO_4 - P	4.8	2.4	50
	Geometric mean In, no./ml	Out, no./ml	% Removal
Total coliform	34,786	2,883	91
Fecal coliform	2,308	374	83

a. Data from 23 storm events.

ratio, and detention times in the contact and stabilization tanks [17, 24, 15, 14]. In the work at Kenosha, however, it has not been possible to show any correlation between removals and these items, although it has been shown that operation based on an assumed uniform influent BOD_5 is sufficient for good BOD_5 and SS removals (80 and 90 percent, respectively).

Operating Parameters – With contact stabilization or any other activated sludge process, operation is normally based on the food-to-microorganism ratio or sludge retention time. Because of this, difficulties may be encountered when using an activated sludge process for treating a rapidly varying and intermittent flow. The sludge retention time is particularly difficult to control because overflows may not last long enough for the plant to stabilize and for proper wasting procedures to be instituted. Operating the plant on stored overflows could reduce this problem The food-to-microorganism ratio, which is interrelated to the sludge age, can be used to control the operation of the plant; however, it too is difficult to control since the concentration of both the incoming BOD_5 and the biological solids in the system must be known. This is further complicated because the BOD_5 concentration in the combined sewer overflow may vary significantly. Based on the results at Kenosha, it has been found that exact control is not necessary for good operation.

The operating parameters used for the contact stabilization plant at Kenosha are shown in Table 52. The values reported are averages, and the range was generally within ±60 percent of the value listed. For comparison, the design parameters for sewage treatment by contact stabilization found in the literature are also presented.

For units such as that at Kenosha, sophisticated design may not be warranted because the system is operated for such short periods that the biosolids and the kinetics of the system do not have a chance to adjust to the incoming flow before the storm is over. In this case, using the reported design equations should be sufficient. Abatement plans that include a contact stabilization process for the treatment of stored overflows for periods of time greater than 5 to 10 days may warrant more sophisticated design to achieve higher removal efficiencies. The use of the kinetic equations describing the metabolism of the bacteria, as formulated by McCarty [14], Metcalf & Eddy [17], and others, may prove useful under such circumstances.

Results of Operational Tests – The work at Kenosha has not been able to show any adverse condition that affects removals. Based on the results of 23 storms studied, the

Table 52. CONTACT STABILIZATION OPERATING PARAMETERS

Parameter	Kenosha, Wis. [23]	Range of values reported in the literature
Sludge retention time, day	4[a]	4-15
Food-to-microorganism ratio, F/M, lb BOD_5/lb MLSS/day		
Contact tank and stabilization tank	0.21	0.15-0.6
Contact tank alone	2.66	--
Loading rate, lb BOD_5/1,000 cf	108	30-125
MLSS, mg/l		
Contact tank	3,000	1,000-3,000
Stabilization tank	12,000	4,000-10,000
Detention time, hr		
Contact tank	0.25	0.25-1.0
Stabilization tank	3	3-6
Recycle ratio, Qr/Q	.12-.58	0.25-1.0
Volume of air required, cf/lb BOD_5		
Contact tank	470	1,000-1,200
Stabilization tank	110	
BOD_5 removal, %	83	80-90

a. Controlled principally by time between storms.

Note: lb BOD_5/lb MLSS/day x 1.0 = kg BOD_5/kg MLSS/day
lb BOD_5/1,000 cf x 16.02 = g BOD_5/1,000 cu m
cf/lb BOD_5 x 62.4 = l/kg BOD_5

number of data points was not sufficient to produce significant correlations between the many parameters tested (i.e., optimum food-to-microorganism ratio, sludge retention time, detention times in contact and stabilization tanks, system efficiencies as a function of time after rainfall, temperature, optimum startup and shutdown, etc.) [23]. The optimum values for these parameters should become known as testing continues.

Some degradation in the settling characteristics of the sludge was noted when the sludge age reached 10 days. The completion of the study should provide more definitive answers to the possible correlation among the various parameters mentioned above.

The only operational consideration reported is the type of aeration system. Diffused aeration proved to be better than mechanical aeration primarily because of accumulation of ice on the mechanical aerators during freezing conditions (see the discussion of Treatment Lagoons later in this section for additional information on this problem).

Advantages and Disadvantages

Some advantages of the contact stabilization process for the treatment of excess (combined sewer) flows in this application are: (1) high degree of treatment; (2) central location of maintenance personnel and equipment; and (3) reduction of the loadings on dry-weather facilities, by dual use of facilities, during normal operations and emergency shutdown of the main plant, making the whole very versatile. Contact stabilization shows definite promise as a method for treating combined sewer overflows when used in combination with a dry-weather activated sludge treatment plant. Disadvantages are: (1) high initial cost, (2) the facilities must be located next to a dry-weather activated sludge plant, (3) adequate interceptor capacity must exist to convey the storm flow to the treatment plant, and (4) expansion of major interceptors may be required.

TRICKLING FILTERS

Description of Process

Trickling filters are widely employed for the biological treatment of municipal sewage. The filter is usually a shallow, circular tank of large diameter filled with crushed stone, drain rock, or other similar media. Settled sewage is applied intermittently or continuously over the top surface of the filter by means of a rotating distributor and is collected and discharged at the bottom. Aerobic conditions are maintained by a flow of air through the filter bed induced by the difference in specific weights of the atmosphere inside and outside the bed.

The term "filter" is a misnomer, because the removal of organic material is not accomplished with a filtering or straining operation. Removal is the result of an adsorption process occurring at the surface of biological slimes covering the filter media.

Classification — Trickling filters are classified by hydraulic or organic loading. Until recently, there were only two flow classifications: low rate and high rate. A third classification, ultrahigh rate, has been added since the advent of plastic medium filters. Although the distinctions are based on hydraulic loading, they are centered in reality around the organic loading that the filter can handle. A comparison of the three classifications of trickling filters is presented in Table 53.

The type of medium used varies considerably. Rock, slag, hard coal, redwood slats, and corrugated plastic have been used. Rock, slag, and hard coal have relatively low surface

Table 53. COMPARISON OF LOW-RATE, HIGH-RATE, AND ULTRAHIGH-RATE TRICKLING FILTERS

Factor	Low-rate	High-rate	Utrahigh-rate
Hydraulic loading, mgad	1 to 4	10 to 40	40 to 120
Organic loading, lb BOD_5/acre-ft/day	300 to 1,000	1,000 to 5,000	2,000 to 10,000 (and above)
Depth, ft	6 to 10	3 to 8	20 to 40
Recirculation	None	1:1 to 4:1	1:1 to 4:1
Medium	Rock[a]	Rock[a]	Plastic or redwood slats
Power requirements	None	10 to 50 hp/ mil gal.	--
Filter flies	Many	Few, larvae are washed away	None
Sloughing	Intermittent	Continuous	Continuous
Operation	Simple	Some skill	Some skill
Dosing interval	Not more than 5 min (generally intermittent)	Not more than 15 sec (continuous)	Generally continuous
Nitrification	Fully nitrified	Nitrification at low loadings	Nitrification at low loadings

a. Media could also be slag or hard coal.

Source: Adapted from [17].

Note: mgad x 0.108 = cu m/sec/ha
lb/acre-ft/day x 0.368 = g/cu m/day
ft x 0.305 = m
hp x 0.746 = kw
mil gal. x 3.785 = Ml

area per unit volume and are quite heavy, thus limiting the depth of filter. Redwood slats and corrugated plastic are much lighter and can be constructed with a larger surface area per unit volume.

Operation – The operation of most high-rate and ultrahigh-rate trickling filters is in series with a second or third filter and/or with recirculation. The purpose is to provide high removals by increasing the contact time of the waste with the biomass attached to the filter material. When operating alone without recirculation, trickling filters used for treating domestic wastes remove between 50 and 75 percent of the BOD_5.

Under storm conditions, the trickling filter must handle highly varying flows. Applying a varying organic load to a filter does not produce optimum removals. It is generally thought that only sufficient biomass adheres to the supporting medium to handle the normal organic load. As the loading increases above this level, the maximum BOD_5 utilization rate of the biomass is reached. This is not a sharp distinction because some excess biomass always adheres to the medium and can accept some of the organic load.

A varying hydraulic load also affects removals. The increased shearing action of high flows causes excess sloughing or washing off of the biomass. To help dampen this effect, filters operating in series under dry-weather conditions can be operated in parallel, thereby reducing some of the increased hydraulic load on each filter. A maximum overall flow variation (maximum/minimum) of 8 to 10 is acceptable while still achieving significant removals [20].

Design – Trickling filter design has been based primarily on empirical formulas. This does not imply that the basic biological kinetics are not operative; rather, it means that mathematical description of the process has not been formulated. There are several design equations in the literature that may be used for the design of trickling filters [17, 6]. In designing a trickling filter to treat overflows, it must be remembered that dry-weather flow is needed to keep the biomass active between storms. Generally, two or more units should be used to provide high removals by operating in series during dry weather and in parallel during storm events to accommodate the flow variation needed.

Demonstration Project, New Providence, New Jersey

Trickling filters have been used extensively throughout the United States to treat domestic flows, but only one facility (at New Providence, New Jersey) has been designed to treat

both dry-weather flow and combined sewer overflows from heavily infiltrated sanitary sewers. This plant represents one of the configurations that can be used to treat combined sewer overflows. The plant, shown schematically on Figure 52, is designed for a dry-weather flow of 26.3 l/sec (0.6 mgd) and a maximum wet-weather flow of 263 l/sec (6.0 mgd). The plant includes a main pump station, primary and secondary clarifiers, two trickling filters, chlorine contact tank, administration building, and other miscellaneous items. One of the filters, 11 meters in diameter by 4.4 meters high (36 feet by 14.4 feet), is packed with plastic medium and the other, 19.8 meters in diameter by 1.8 meters (65 feet by 6 feet), is packed with stone. Photographs of the plant are presented on Figure 53.

The unique feature of the plant is its method of filter operation designed to keep a live biomass available on both filters all of the time. To do so, the filters operate in series with the plastic medium filter in lead position for treating all flows up to 123 l/sec (2.8 mgd). At this point, an automatic transfer to parallel operation is accomplished and maintained until flows again drop within the series range. In parallel operation, the normal combined sewer overflow treatment mode, both filters receive equal flow, resulting in a much higher (3 to 1) unit loading on the smaller plastic medium filter.

Efficiency – The removals have been reported to be 85 to 95 percent for both BOD_5 and SS during dry-weather flow and 65 to 90 percent during wet-weather flow. There was no significant removal of total nitrogen or phosphorus. The loadings and the average removals for the first two years of operation are presented in Table 54.

During combined sewer overflows, it has been found that the removal efficiencies dropped when the hydraulic loading increased above 1.56 cu m/hr/sq m (40 mgad) for the plastic medium and above 0.48 cu m/hr/sq m (12.2 mgad) for the rock trickling filter. Also, the change from series operation to parallel operation reduces removals as recirculation is stopped and the waste flows pass through only one filter before being discharged. Although this reduction occurred, both filters recovered rapidly returning to dry-weather removal rates at the end of the storm. It may also be possible to improve removals by reducing the difference between dry-weather flow loading and wet-weather flow loading. The plant was originally designed for an increase of 10 to 15 times dry-weather flow. An overflow rate in the secondary clarifier of 2.65 cu m/hr/sq m (1,560 gpd/sq ft) was found to be too high during peak flows to achieve good removals.

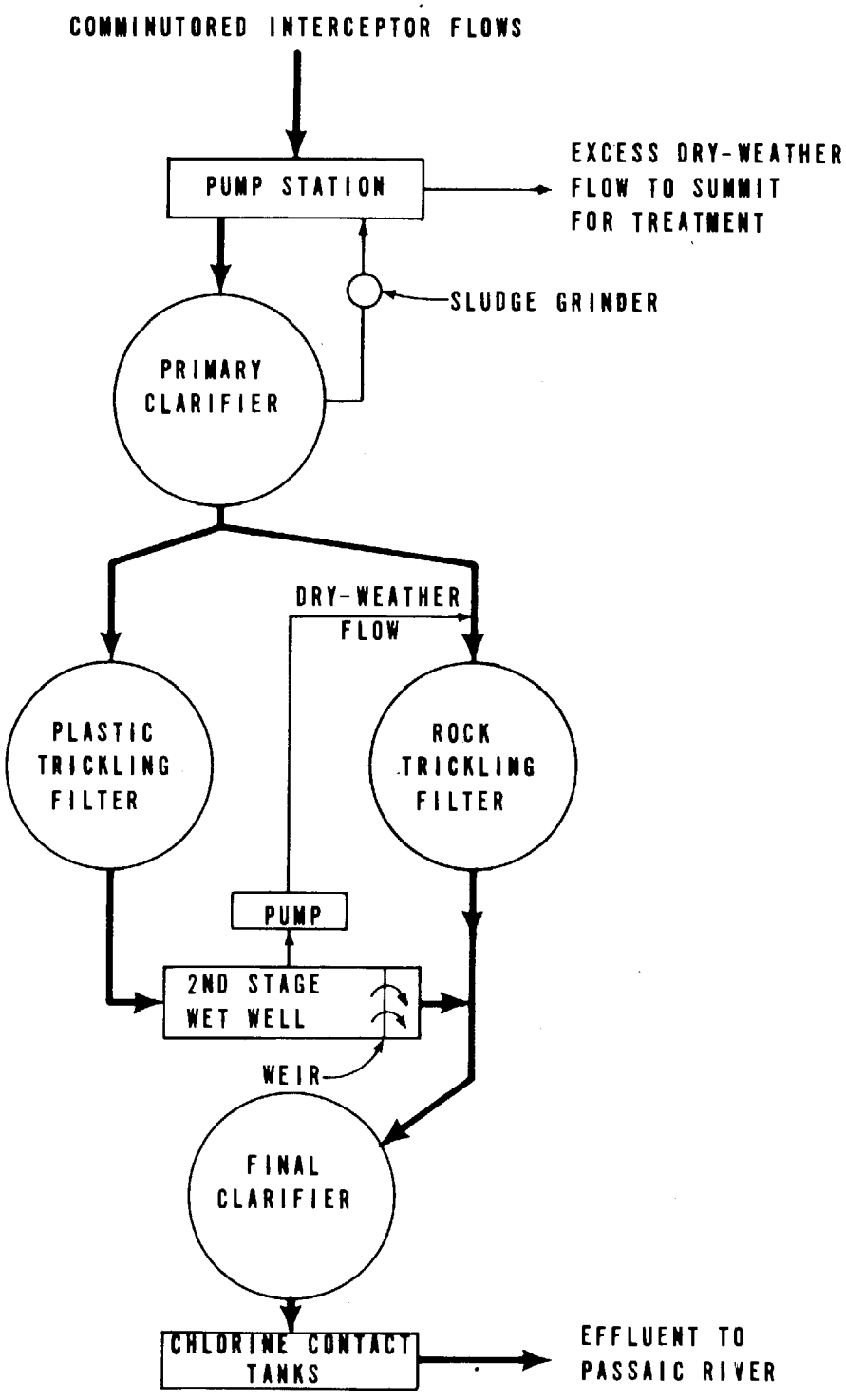

Figure 52. Trickling filter plant schematic, New Providence, N.J.

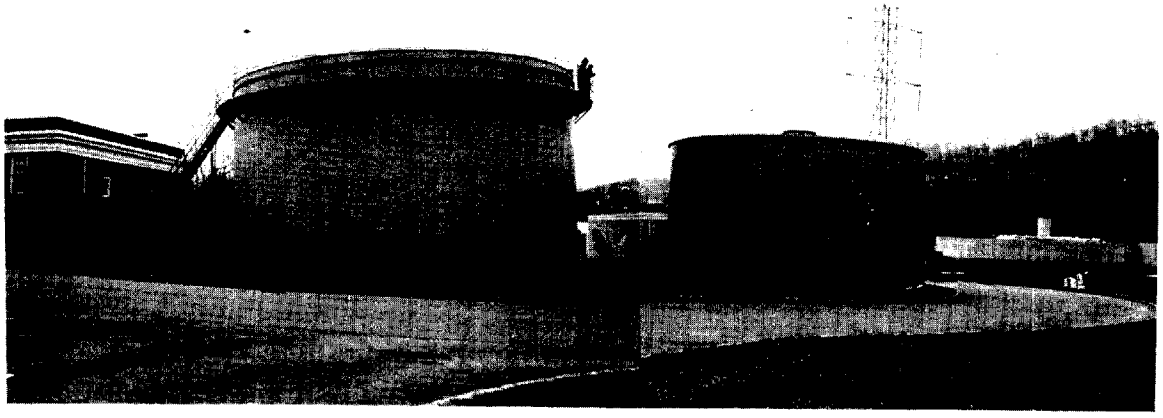

(a)

(b)

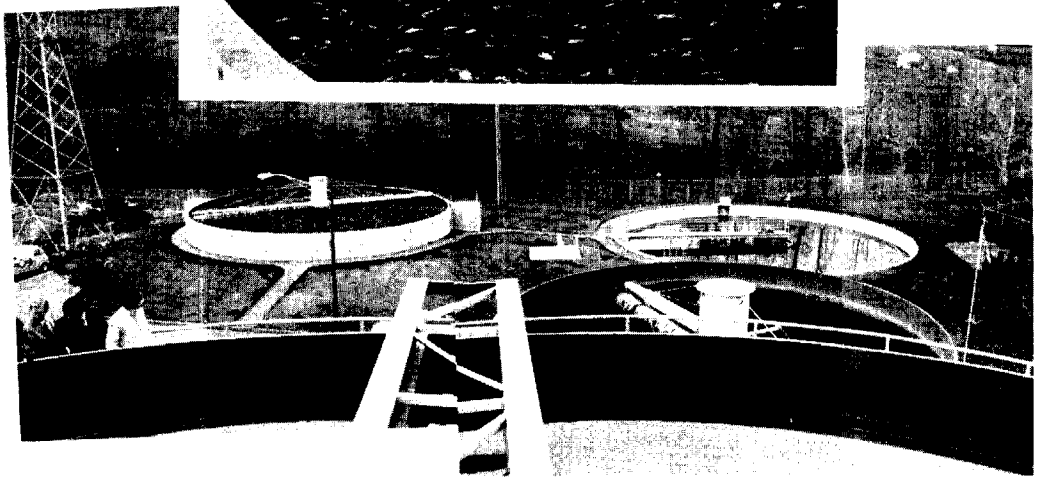

(c)

Figure 53. Combined sewer overflow treatment by high-rate trickling filtration (New Providence)

(a) Composite view of plant showing relative elevations of facilities (from left to right: pumping station, primary clarifier/storage tank, plastic media filter, rock media filter) (b) High-rate application on rock media (c) Composite view from top of primary clarifier/storage tank (final clarifier is at right rear)

Table 54. TRICKLING FILTER REMOVALS [20]
NEW PROVIDENCE, NEW JERSEY

Condition	Average treated flow, mgd	Recirculation rate, mgd	BOD Trickling filters Influent, mg/l	BOD Trickling filters Effluent, mg/l	BOD Trickling filters Removal, %	BOD Overall[a] removal, %	SS Trickling filters Influent, mg/l	SS Trickling filters Effluent, mg/l	SS Trickling filters Removal, %	SS Overall[a] removal, %
Dry weather flow										
First year	0.54	0.8	104	23	78	86	86	20	77	87
Part of second year	0.56	--	--	9	--	94	--	12	--	93
Wet weather flow										
First year	3.96[b]	0.to 0.8	86	39	53	64	64	36	42	67
Part of second year	1.72[c]	--	--	17	--	87	--	20	--	86

a. Includes removals by primary sedimentation.

b. Average wet weather flow; average peak flows were 6.0 mgd with no recirculation.

c. Wet weather flow rate was reduced by approximately 1.5 mgd by pumping to another treatment plant.

Note: mgd x 43.8 = l/sec

In comparing the plastic medium and the rock filter, it was noted that up to 2-1/2 times the BOD_5 removal per unit volume was possible with the plastic medium. Also, on a capital cost basis, the plastic medium outperformed the rock by 2 to 1 ($/kg BOD_5 removed/1,000 cu m).

Design Parameters — The average hydraulic and organic loadings applied to the New Providence facilities are slightly above the recommended design values. The recommended values are:

	Plastic Medium	Rock
Hydraulic loading	2.73 cu m/hr/sq m (70 mgad)	0.78 cu m/hr/sq m (20 mgad)
Organic loading	1.36 kg BOD_5/day cu m (85 lb BOD_5/day/1,000 cf or 3,700 lb BOD_5/acre-ft/day)	0.64 kg BOD_5/day/cu m (40 lb BOD_5/day/1,000 cf or 1,742 lb BOD_5/acre-ft/day)

Additional design parameters were included previously in Table 53.

Advantages and Disadvantages

Advantages of trickling filters include: (1) they handle varying hydraulic and organic loads, (2) are simple to operate, (3) have ability to withstand shockloads, and (4) have

ability to recover rapidly from high flows. Trickling filters are not without disadvantages, however. They need a continuous base flow to keep the biomass active, which is most important in using them to treat combined sewer overflow, and removals decrease when high flow and BOD_5 loadings are applied. Problems may be encountered when treating more dilute combined sewer overflow or storm sewer discharge.

ROTATING BIOLOGICAL CONTACTORS

Rotating biological contactors are a recent development in biological treatment. The method was first developed in Germany in 1955 to treat domestic wastes. Recently, rotating biological contactors have been tried with combined sewer overflows because of their reported ability to handle highly varying flows. A description of an EPA-sponsored demonstration project in Milwaukee, Wisconsin, is included later in this section.

Description of Process

The rotating biological contactor is similar to a cross between a trickling filter and an activated sludge system. It consists of a shaft supporting a set of rotating discs upon which a biomass is grown and a shallow contact tank that houses the shaft-disc assemblies, as shown on Figure 54.

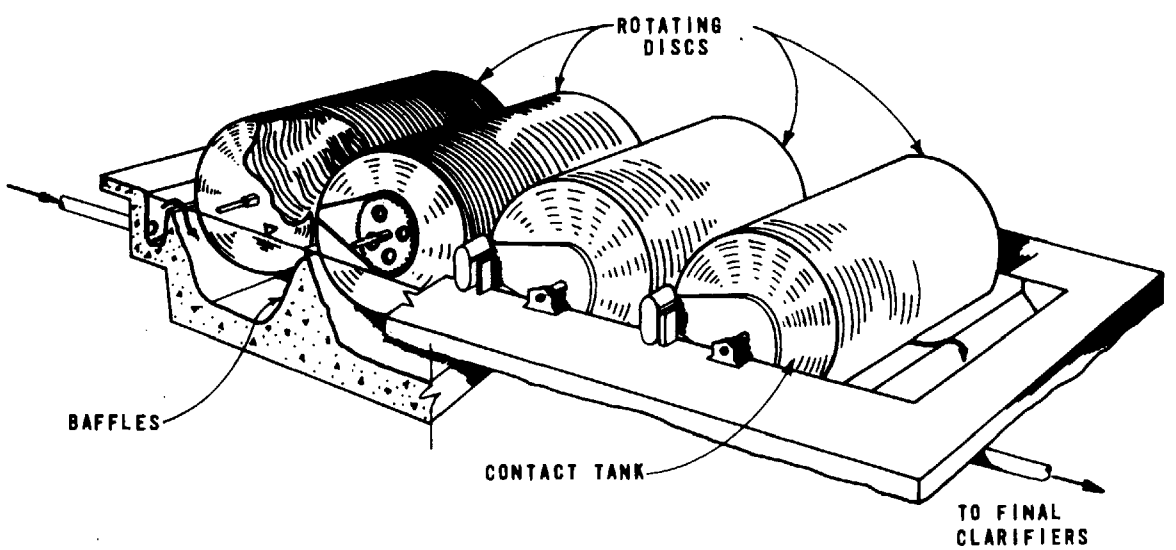

Figure 54. Rotating biological contactor

The rotating discs are partially submerged and baffles are used between each shaft-disc unit to prevent short-circuiting. The waste flow enters the contact tank at one end and is allowed to flow either perpendicular to or parallel to one or more units for treatment. The removal of organic matter from the waste flow, either municipal sewage or combined sewer overflow, is accomplished by adsorption of the organic matter at the surface of the biological growth covering the rotating discs. Rotational shearing forces cause sloughing of excess biomass. Secondary clarification should follow the rotating biological contactor treatment to remove sloughed biomass.

As in all biological systems, because microorganisms have a maximum metabolism rate, only a given amount of substrate can be removed with a given amount of biomass. Although this is true generally in the rotating biological contactor, excess biomass can be held on the disc and can effectively act as a reserve for use at higher loadings. The effectiveness, however, is somewhat limited by the oxygen transfer rate and the substrate diffusion gradient through the layer of biomass on each disc. This is similar to what happens in trickling filters. In general, though, the reserve biomass reduces the importance of maintaining a uniform loading rate.

Efficiency

The reported BOD_5 removal efficiencies range from 60 to 95 percent [7, 2, 3, 26]. The higher values are for more recent installations treating dry-weather flow. Suspended solids removals are also in this range. Removals for settleable solids, nitrogen, and phosphorus have been reported to be 80 to 90, 40, and 50 percent, respectively. When treating combined sewage flows, controlled treatment (70 percent or better COD removal efficiency) was reportedly maintained up to 8 to 10 times dry-weather flow [7]. A linear reduction in COD removal efficiency from 70 down to 20 percent was reported for the flow range from 10 to 30 times dry-weather flow.

Operational Considerations

Conditions noted to affect the BOD_5 and COD removals in a rotating biological contactor are (1) organic loading rate, (2) contact time, (3) effluent settling, (4) the number of units in series, and (5) high flow rates. The most important condition is high flow rates which affects the first three of the conditions just enumerated. The maximum allowable variation in flow is approximately 10 times the base

The rotating discs are partially submerged and baffles are used between each shaft-disc unit to prevent short-circuiting. The waste flow enters the contact tank at one end and is allowed to flow either perpendicular to or parallel to one or more units for treatment. The removal of organic matter from the waste flow, either municipal sewage or combined sewer overflow, is accomplished by adsorption of the organic matter at the surface of the biological growth covering the rotating discs. Rotational shearing forces cause sloughing of excess biomass. Secondary clarification should follow the rotating biological contactor treatment to remove sloughed biomass.

As in all biological systems, because microorganisms have a maximum metabolism rate, only a given amount of substrate can be removed with a given amount of biomass. Although this is true generally in the rotating biological contactor, excess biomass can be held on the disc and can effectively act as a reserve for use at higher loadings. The effectiveness, however, is somewhat limited by the oxygen transfer rate and the substrate diffusion gradient through the layer of biomass on each disc. This is similar to what happens in trickling filters. In general, though, the reserve biomass reduces the importance of maintaining a uniform loading rate.

Efficiency

The reported BOD_5 removal efficiencies range from 60 to 95 percent [7, 2, 3, 26]. The higher values are for more recent installations treating dry-weather flow. Suspended solids removals are also in this range. Removals for settleable solids, nitrogen, and phosphorus have been reported to be 80 to 90, 40, and 50 percent, respectively. When treating combined sewage flows, controlled treatment (70 percent or better COD removal efficiency) was reportedly maintained up to 8 to 10 times dry-weather flow [7]. A linear reduction in COD removal efficiency from 70 down to 20 percent was reported for the flow range from 10 to 30 times dry-weather flow.

Operational Considerations

Conditions noted to affect the BOD_5 and COD removals in a rotating biological contactor are (1) organic loading rate, (2) contact time, (3) effluent settling, (4) the number of units in series, and (5) high flow rates. The most important condition is high flow rates which affects the first three of the conditions just enumerated. The maximum allowable variation in flow is approximately 10 times the base

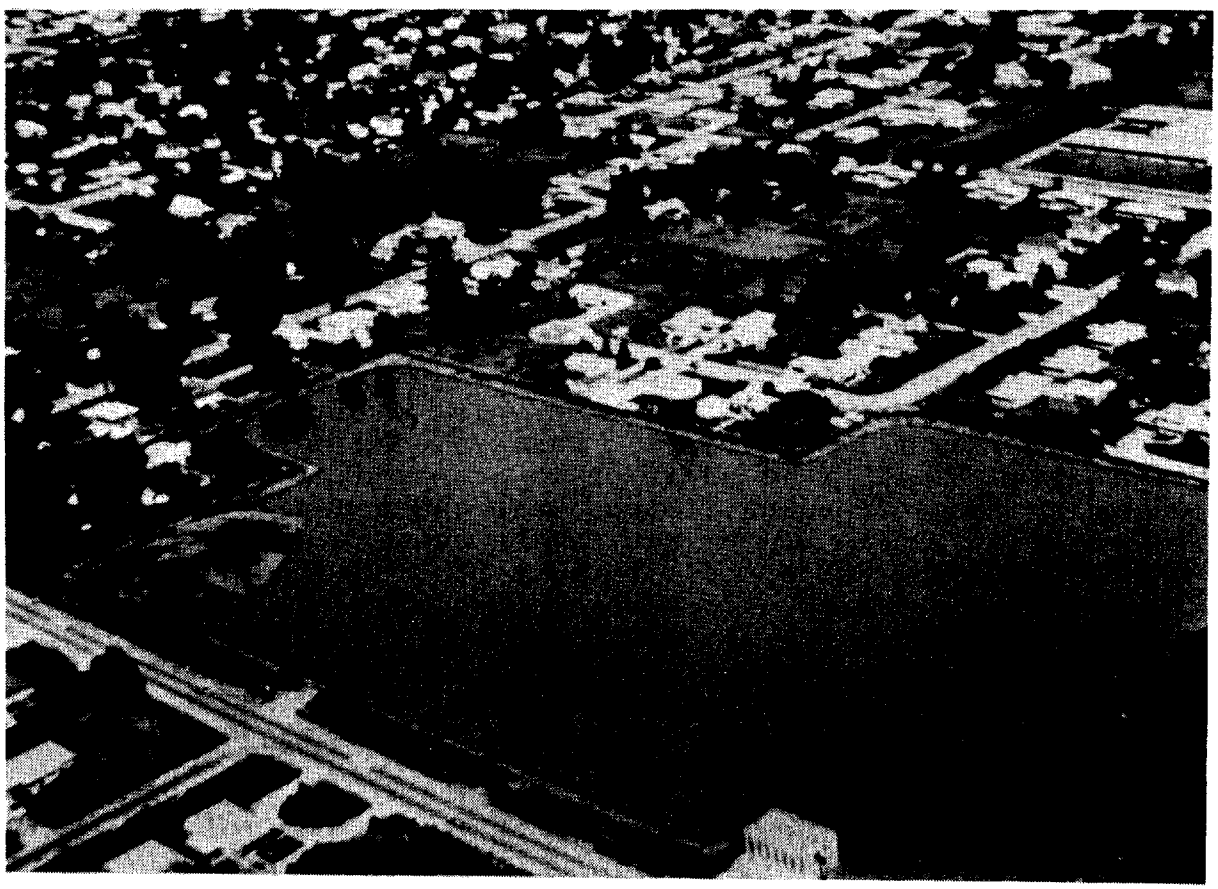

Figure 18. Stormwater surface detention pond (Chicago)

Table 54. TRICKLING FILTER REMOVALS [20]
NEW PROVIDENCE, NEW JERSEY

Condition	Average treated flow, mgd	Recirculation rate, mgd	BOD				SS			
			Trickling filters			Overall[a] removal, %	Trickling filters			Overall[a] removal, %
			Influent, mg/l	Effluent, mg/l	Removal, %		Influent, mg/l	Effluent, mg/l	Removal, %	
Dry weather flow										
First year	0.54	0.8	104	23	78	86	86	20	77	87
Part of second year	0.56	--	--	9	--	94	--	12	--	93
Wet weather flow										
First year	3.96[b]	0.to 0.8	86	39	53	64	64	36	42	67
Part of second year	1.72[c]	--	--	17	--	87	--	20	--	86

a. Includes removals by primary sedimentation.

b. Average wet weather flow; average peak flows were 6.0 mgd with no recirculation.

c. Wet weather flow rate was reduced by approximately 1.5 mgd by pumping to another treatment plant.

Note: mgd x 43.8 = l/sec

In comparing the plastic medium and the rock filter, it was noted that up to 2-1/2 times the BOD_5 removal per unit volume was possible with the plastic medium. Also, on a capital cost basis, the plastic medium outperformed the rock by 2 to 1 ($/kg BOD_5 removed/1,000 cu m).

Design Parameters — The average hydraulic and organic loadings applied to the New Providence facilities are slightly above the recommended design values. The recommended values are:

	Plastic Medium	Rock
Hydraulic loading	2.73 cu m/hr/sq m (70 mgad)	0.78 cu m/hr/sq m (20 mgad)
Organic loading	1.36 kg BOD_5/day cu m (85 lb BOD_5/day/1,000 cf or 3,700 lb BOD_5/acre-ft/day)	0.64 kg BOD_5/day/cu m (40 lb BOD_5/day/1,000 cf or 1,742 lb BOD_5/acre-ft/day)

Additional design parameters were included previously in Table 53.

Advantages and Disadvantages

Advantages of trickling filters include: (1) they handle varying hydraulic and organic loads, (2) are simple to operate, (3) have ability to withstand shockloads, and (4) have

recharge of groundwater. Erosion control measures in construction areas will minimize the increased solids loadings in runoff from such areas.

4. Drainage pipes and other flood control structures will be used only where the natural system is inadequate, such as at high density urban activity centers. Plans presently call for the use of porous pavements to reduce runoff from streets.

5. Control will be exercised over the type and amount of fertilizers, pesticides, and herbicides to minimize pollution of the runoff.

It has been estimated that the drainage system will cost an average of $243/ha ($600/acre), compared with perhaps $486/ha ($1,200/acre) for a conventional system [2].

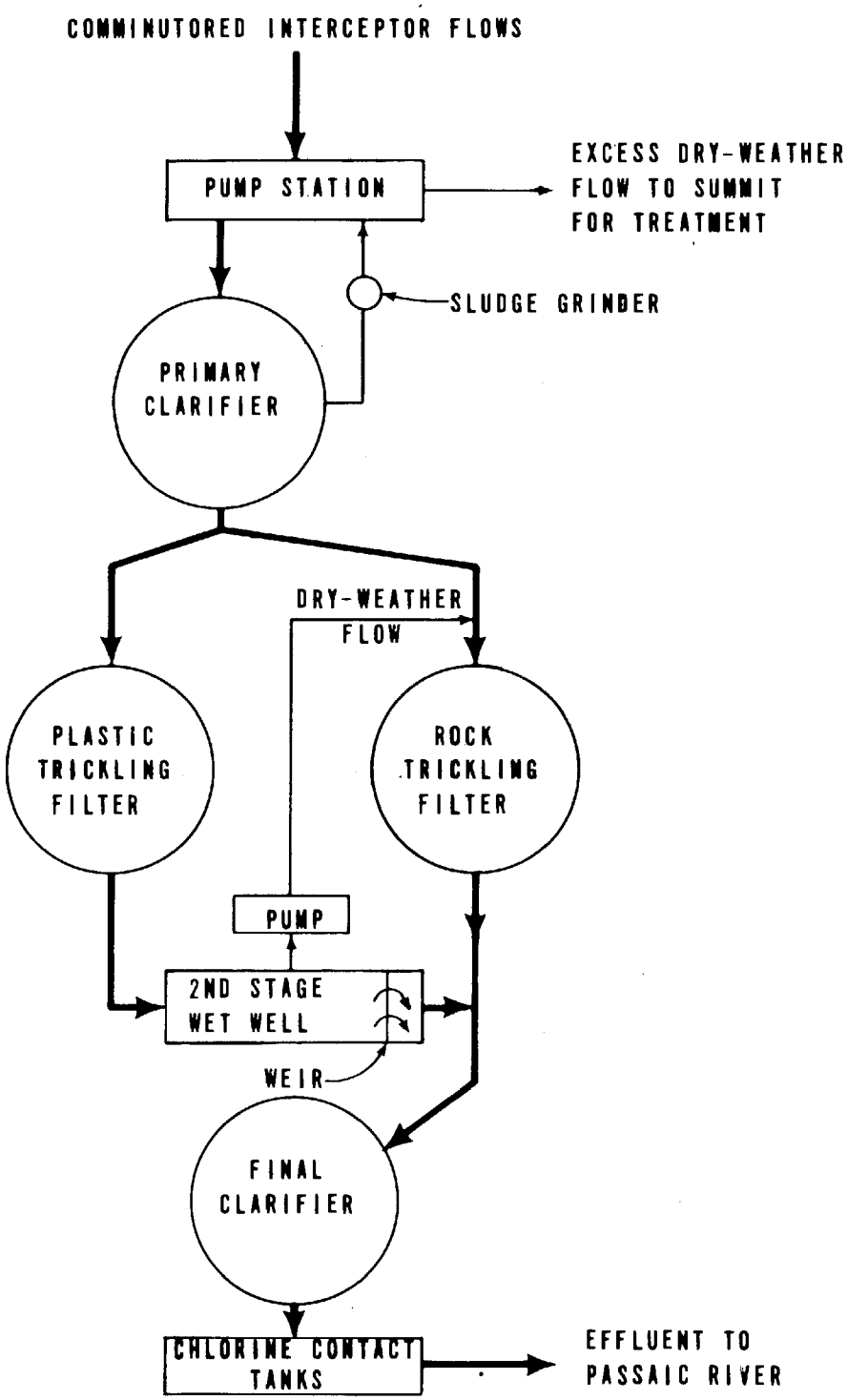

Figure 52. Trickling filter plant schematic, New Providence, N.J.

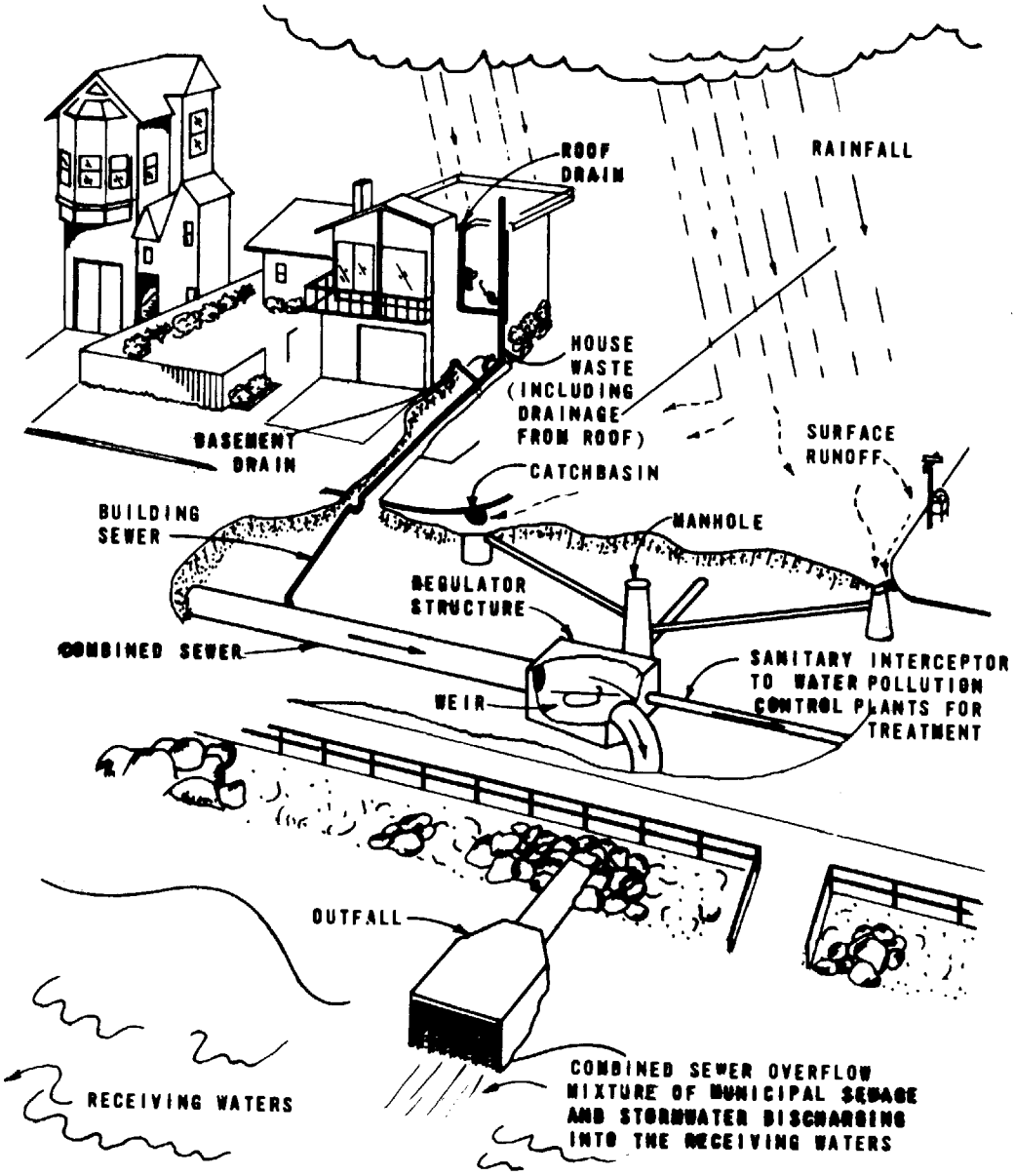

Figure 19. Common elements of an interceptor and transport system [6]

area per unit volume and are quite heavy, thus limiting the depth of filter. Redwood slats and corrugated plastic are much lighter and can be constructed with a larger surface area per unit volume.

Operation – The operation of most high-rate and ultrahigh-rate trickling filters is in series with a second or third filter and/or with recirculation. The purpose is to provide high removals by increasing the contact time of the waste with the biomass attached to the filter material. When operating alone without recirculation, trickling filters used for treating domestic wastes remove between 50 and 75 percent of the BOD_5.

Under storm conditions, the trickling filter must handle highly varying flows. Applying a varying organic load to a filter does not produce optimum removals. It is generally thought that only sufficient biomass adheres to the supporting medium to handle the normal organic load. As the loading increases above this level, the maximum BOD_5 utilization rate of the biomass is reached. This is not a sharp distinction because some excess biomass always adheres to the medium and can accept some of the organic load.

A varying hydraulic load also affects removals. The increased shearing action of high flows causes excess sloughing or washing off of the biomass. To help dampen this effect, filters operating in series under dry-weather conditions can be operated in parallel, thereby reducing some of the increased hydraulic load on each filter. A maximum overall flow variation (maximum/minimum) of 8 to 10 is acceptable while still achieving significant removals [20].

Design – Trickling filter design has been based primarily on empirical formulas. This does not imply that the basic biological kinetics are not operative; rather, it means that mathematical description of the process has not been formulated. There are several design equations in the literature that may be used for the design of trickling filters [17, 6]. In designing a trickling filter to treat overflows, it must be remembered that dry-weather flow is needed to keep the biomass active between storms. Generally, two or more units should be used to provide high removals by operating in series during dry weather and in parallel during storm events to accommodate the flow variation needed.

Demonstration Project, New Providence, New Jersey

Trickling filters have been used extensively throughout the United States to treat domestic flows, but only one facility (at New Providence, New Jersey) has been designed to treat

(50 million persons) was served in whole or in part by combined sewer systems [42]. Furthermore, it was reported that there were 14,212 overflows in the total 641 jurisdictions surveyed; of these, 9,860 combined sewer overflows were reported from 493 jurisdictions. Until 1967, the most common remedial method reported was sewer separation, and of 274 jurisdictions with plans for corrective facilities construction, 222 indicated that some degree of sewer separation would be undertaken.

Detailed Analysis

Sewer separation will continue to be used to some degree in the future and thus an investigation of the methods, their advantages and disadvantages, and their costs is warranted. There are three categories of sewer separation systems: pressure, vacuum, and gravity.

The most comprehensive study of the pressure or "sewer within a sewer" concept was published by the ASCE [12] in 1969. The greatest disadvantage of pressure systems is generally higher costs, as shown in a comparison of pressure and gravity system costs in the cities of Boston, Milwaukee, and San Francisco presented in Table 26. The ratios of pressure to gravity costs are 1.4, 1.5, and 1.5, respectively. The in-sewer pressure lines varied from 6.3 to 40.6 cm (2-1/2 to 16 inches) in diameter and pressure control valves limited the line pressure to 2.11 kg/sq cm (30 psi). A major portion of the costs is the "in-house separation" which can be as high as 82 percent of the total cost for separation using a pressure system [12]. Besides the high costs, other disadvantages of pressure systems are that (1) they are difficult to maintain; (2) they require complex controls; and (3) they are dependent on electricity for operation. It is important to realize that approximately 72 percent of all combined sewers are less than 0.61 meters (2.0 feet) in diameter, making it difficult to install the pressure pipe.

The advantages are that (1) as an alternative, they provide an additional degree of latitude in sewer design, (2) there is minimal construction interference to commerce and traffic, and (3) they are handy in low areas.

Sewer separation of existing combined sewers has historically been accomplished by utilizing gravity systems. The advantages of gravity sewer separation are that (1) all sanitary sewage is treated prior to discharge; (2) treatment plants operate more efficiently under the relatively stable sanitary flows; (3) other alternatives are less reliable

Advantages and Disadvantages

Some advantages of the contact stabilization process for the treatment of excess (combined sewer) flows in this application are: (1) high degree of treatment; (2) central location of maintenance personnel and equipment; and (3) reduction of the loadings on dry-weather facilities, by dual use of facilities, during normal operations and emergency shutdown of the main plant, making the whole very versatile. Contact stabilization shows definite promise as a method for treating combined sewer overflows when used in combination with a dry-weather activated sludge treatment plant. Disadvantages are: (1) high initial cost, (2) the facilities must be located next to a dry-weather activated sludge plant, (3) adequate interceptor capacity must exist to convey the storm flow to the treatment plant, and (4) expansion of major interceptors may be required.

TRICKLING FILTERS

Description of Process

Trickling filters are widely employed for the biological treatment of municipal sewage. The filter is usually a shallow, circular tank of large diameter filled with crushed stone, drain rock, or other similar media. Settled sewage is applied intermittently or continuously over the top surface of the filter by means of a rotating distributor and is collected and discharged at the bottom. Aerobic conditions are maintained by a flow of air through the filter bed induced by the difference in specific weights of the atmosphere inside and outside the bed.

The term "filter" is a misnomer, because the removal of organic material is not accomplished with a filtering or straining operation. Removal is the result of an adsorption process occurring at the surface of biological slimes covering the filter media.

Classification — Trickling filters are classified by hydraulic or organic loading. Until recently, there were only two flow classifications: low rate and high rate. A third classification, ultrahigh rate, has been added since the advent of plastic medium filters. Although the distinctions are based on hydraulic loading, they are centered in reality around the organic loading that the filter can handle. A comparison of the three classifications of trickling filters is presented in Table 53.

The type of medium used varies considerably. Rock, slag, hard coal, redwood slats, and corrugated plastic have been used. Rock, slag, and hard coal have relatively low surface

overall because of external power requirements; (4) no land acquisition is necessary; (5) receiving water pollution loads can be reduced by 50 percent (according to independent studies [49, 30]); and (6) little increase in manpower is required.

Disadvantages of gravity systems may be divided into three categories: nonquantifiable, separation effectiveness, and costs. Nonquantifiable disadvantages, which based on past experience are the most important, are that (1) considerable work is involved in in-house plumbing separation; (2) there are business losses during construction; (3) traffic is disrupted; (4) political and jurisdictional disputes must be resolved; (5) extensive policing is necessary to ensure complete and total separation; and (6) considerable time is required for completion (e.g., in 1957 separation in Washington, D.C., was estimated to take until sometime after the year 2000 to complete) [24]. Separation effectiveness disadvantages are as follows: (1) there is only a partial reduction of the pollutional effects of combined sewer overflows [30]; (2) urban area stormwater runoff contains significant contaminants [7, 4]; and (3) it is difficult to protect storm sewers from sanitary connections (either authorized or unauthorized). Estimated costs for gravity sewer separation are shown for various cities in Table 26.

The cost disadvantages of separation, when compared to some conceptive alternative solutions, are indicated in Table 27. Again, the major reason for the higher costs of sewer separation are in-house plumbing changes which can be as high as 82 percent of the total sewer separation costs [12].

Conclusions

On the basis of currently available information, it appears that sewer separation of existing combined sewer systems is not a practical and economical solution for combined sewer overflow pollution abatement. Several cited alternatives listed in Table 27 suggest other solutions, most of which are considerably less expensive and should give better results with respect to receiving water pollution abatement. In addition, storm sewer discharges may not be allowed at all in the future, thus forcing collection and treatment of all sewage and stormwater prior to discharge. In this case, the argument for either separate or combined sewers is moot.

The choice between sewer separation and other alternatives will be controlled by the uniqueness of each situation. The examples cited in Table 27 leave no doubt that any alternative to sewer separation is the better choice. However,

ratio, and detention times in the contact and stabilization tanks [17, 24, 15, 14]. In the work at Kenosha, however, it has not been possible to show any correlation between removals and these items, although it has been shown that operation based on an assumed uniform influent BOD_5 is sufficient for good BOD_5 and SS removals (80 and 90 percent, respectively).

Operating Parameters – With contact stabilization or any other activated sludge process, operation is normally based on the food-to-microorganism ratio or sludge retention time. Because of this, difficulties may be encountered when using an activated sludge process for treating a rapidly varying and intermittent flow. The sludge retention time is particularly difficult to control because overflows may not last long enough for the plant to stabilize and for proper wasting procedures to be instituted. Operating the plant on stored overflows could reduce this problem The food-to-microorganism ratio, which is interrelated to the sludge age, can be used to control the operation of the plant; however, it too is difficult to control since the concentration of both the incoming BOD_5 and the biological solids in the system must be known. This is further complicated because the BOD_5 concentration in the combined sewer overflow may vary significantly. Based on the results at Kenosha, it has been found that exact control is not necessary for good operation.

The operating parameters used for the contact stabilization plant at Kenosha are shown in Table 52. The values reported are averages, and the range was generally within ±60 percent of the value listed. For comparison, the design parameters for sewage treatment by contact stabilization found in the literature are also presented.

For units such as that at Kenosha, sophisticated design may not be warranted because the system is operated for such short periods that the biosolids and the kinetics of the system do not have a chance to adjust to the incoming flow before the storm is over. In this case, using the reported design equations should be sufficient. Abatement plans that include a contact stabilization process for the treatment of stored overflows for periods of time greater than 5 to 10 days may warrant more sophisticated design to achieve higher removal efficiencies. The use of the kinetic equations describing the metabolism of the bacteria, as formulated by McCarty [14], Metcalf & Eddy [17], and others, may prove useful under such circumstances.

Results of Operational Tests – The work at Kenosha has not been able to show any adverse condition that affects removals. Based on the results of 23 storms studied, the

INFILTRATION/INFLOW CONTROL

A serious problem results from (1) excessive infiltration into sewers from groundwater sources and (2) high inflow rates into sewer systems through direct connections from sources other than those which the sewers are intended to serve. Inflow does not include, and is distinguished from, infiltration. The sources and control of infiltration and inflow are discussed in this subsection.

Sources

Infiltration is the volume of groundwater entering sewers and building sewer connections from the soil through defective joints, broken, cracked, or eroded pipe, improper connections, manhole walls, etc. Inflow is the volume of any kind of water discharged into sewer lines from such sources as roof leaders, cellar and yard drains, foundation drains, commercial and industrial so-called "clean water" discharges, drains from springs and swampy areas, depressed manhole covers, cross connections, etc.

Inflow sources generally represent a deliberate connection of a drain line to a sewerage system. These connections may be authorized and permitted; or they may be illicit connections made for the convenience of property owners and for the solution of on-property problems, without consideration of their effects on public sewer systems.

The intrusion of these waters takes up flow capacity in the sewers. Especially in the relatively small sanitary sewers, these waters may cause flooding of street and road areas and backflooding into properties. This flooding constitutes a health hazard. Thus these sanitary sewers actually function as combined sewers, and the resulting flooding becomes a form of combined sewer overflow.

The two types of extraneous water, inflow and infiltration, which intrude into sewers do not differ significantly in quality, except for the pollutants unavoidably or deliberately introduced into waters by commercial-industrial operations [13]. Foundation inflow, for example, does not vary greatly from the kind of water that infiltrates sewer lines from groundwater sources. Basement drainage may carry wastes and debris originating in homes, including laundry wastewater.

Inflow Control

Correction of inflow conditions is dependent on regulatory action on the part of city officials, rather than on public

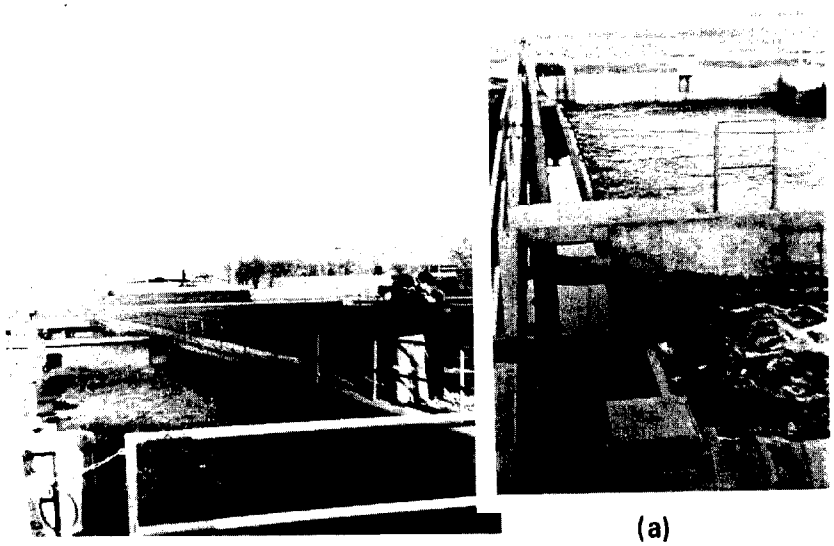

(a)

(b)

(c)

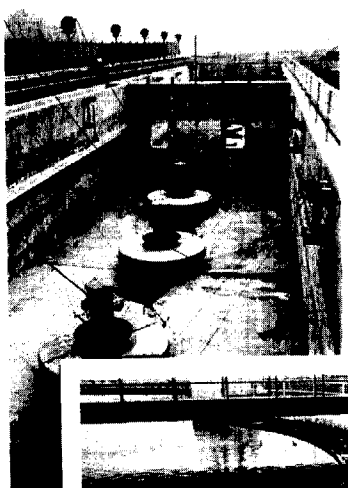

(d)

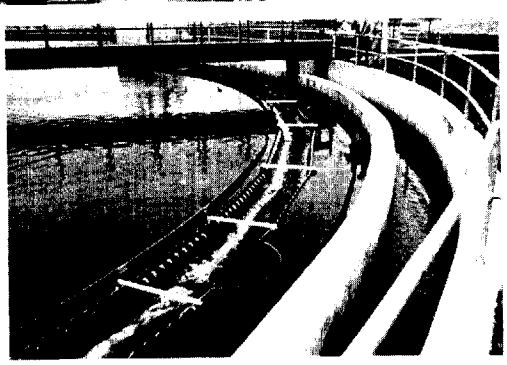

(e)

Figure 51. Combined sewer overflow treatment by contact stabilization (Kenosha)

(a) Contact tank with diffused air (b) Sludge stabilization tanks with floating aerators (c) Floating aerator anchoring and counterweight details (d) Closeup of aerator operation (e) Final contact tank (peripherally fed) and effluent

Choice of sewer pipe — Improvements in pipe materials assure the designer's ability to provide proper materials to meet any rational infiltration allowances he wishes to specify. The upgrading of pipe manufacture to meet rigid quality standards and specifications has eliminated the basic question of watertightness of pipe material. The important issues to consider in pipe material selection are structural integrity, strength of the wastewater character, and local soil or gradient conditions. Combinations of these factors may make one material better suited than another or preferable under certain special installation conditions. In such situations, pipe materials are often chosen for reasons other than their relative resistance to infiltration. The cost of the pipe is usually a small part of the total project cost. For rough estimating purposes, the cost of installed sewer pipes (excluding manholes, laterals and connections, appurtenances, etc.) ranges from $0.97 to $1.55 per cm diameter per linear meter ($1.25 to $2.00 per inch diameter per linear foot).

Materials commonly used for sewer pipe construction include (1) asbestos cement, (2) bituminous coated corrugated metal, (3) brick, (4) cast iron or ductile iron, (5) concrete (monolithic or plain), (6) plastic (including glass fiber reinforced plastic, polyvinylchloride, ABS, and polyethylene), (7) reinforced concrete, (8) steel, (9) vitrified clay, and (10) aluminum. All of these materials, with the possible exceptions of the plastics and aluminum, have been used in sewer construction for many years.

Since sewer pipe made from the plastic materials is relatively new, a brief description of the use of plastic pipes is included below.

Solid wall plastic pipe usually refers to materials such as polyvinylchloride (PVC), chlorinated polyvinylchloride (CPVC), polyvinyldichloride (PVDC), and polyethylene. These materials are lightweight, have high tensile strength, have excellent chemical resistance, and can be joined by solvent welding, fusion welding, or threading. The PVC is probably the most commonly used plastic pipe because it is stronger and more rigid than most of the other thermoplastics; however, PVC is available only in diameters up to 30.5 cm (12 inches).

Polyethylene pipe is finding major use as a liner for deteriorated existing sewer lines [26]. Several lengths of polyethylene pipe can be joined by fusion welding into a long, flexible tube. This tube is then pulled into the existing sewer. When the existing house laterals have been connected to this new pipe liner, the result is a watertight

3. Shakedown runs are necessary to keep the units and the usual large number of automatic controls in operating order.

CONTACT STABILIZATION

Description of the Process

Contact stabilization is considered in lieu of other activated sludge process modifications for treating combined sewer overflows, because it requires less tank volume to provide essentially the same effluent quality. The overflow is mixed with returned activated sludge in an aerated contact basin for approximately 20 minutes at the design flow. Following the contact period, the activated sludge is settled in a clarifier. The concentrated sludge then flows to a stabilization basin where it is aerated for several hours. During this period, the organics from the overflow are utilized in growth and respiration and, as a result, become "stabilized." The stabilized sludge is then returned to the contact basin to be mixed with the incoming overflow. A schematic of a contact stabilization plant for treating combined sewer overflows is shown on Figure 50.

Demonstration Project, Kenosha, Wisconsin

A project sponsored by the EPA to evaluate the use of contact stabilization for treatment of combined sewer overflows from a 486-ha (1,200-acre) tributary area is presently underway at Kenosha, Wisconsin [23, 19]. It is an example of how contact stabilization can be used to treat combined sewer overflows using the waste activated sludge from a dry-weather activated sludge plant. At the Kenosha municipal sewage treatment plant, a 101-l/sec (23-mgd) facility, a new combined sewer overflow treatment facility was constructed. This facility consists of an aeration tank, a contact stabilization tank, and a new clarifier. The design capacity of the new facility is 88 l/sec (20 mgd). The stabilization tank, acting as the biosolids reservoir, receives the waste activated sludge from the main plant. This sludge is held for up to 7 days before final wasting. Thus, stabilized activated sludge is kept in reserve ready to treat combined sewer overflows when they occur. Photographs of the facility are shown on Figure 51.

Operation of the contact stabilization plant consists of directing the combined sewer overflow to the contact tank following comminution and grit removal, adding the reserve activated sludge, and then conducting the waste flows to a final clarifier for separation of the biosolids and other

made of natural rubber, synthetic rubber, or various other elastomers. These joints are used on asbestos cement pipe, cast iron pipe, concrete pipe, vitrified clay pipe, and certain types of plastic pipes. Compression gasket joints are most effective against infiltration while still providing for deflection of the pipe.

Chemical weld joints – Chemical weld joints are used to join certain types of plastic pipes and glass fiber pipes. The joints provide a watertight seal. It has been reported that, on the basis of field tests, jointing under wet or difficult-to-see conditions does not lend itself to precise and careful workmanship. Thus special care is necessary in preparing these joints in the field. More experience with these pipes in sewer applications is necessary to determine the longevity of this type of joint.

Heat shrinkable tubing – A new type of joint developed recently is the heat shrinkable tubing (HST) [27]. The HST material begins as an ordinary plastic or rubber compound which is then extruded into sections of tubing. The tubing is then heated and stretched in diameter but not in length. After cooling it retains the expanded diameter. If a length of 8-inch diameter tubing is expanded to 16 inches, it will conform to any shape between 8 and 16 inches when reheated. This characteristic gives the HST the ability to form a tight fit around sewer pipe joints.

The material recommended for HST joints is a polyolefin which has a high degree of chemical resistance and the ability to resist scorching and burning, and is both economical and easy to apply. To further assure HST joint strength and resistance to internal pressure, a hot melt adhesive is recommended as an inner surface sealant. The adhesive material has a melting temperature close to that of the HST and will bind the tubing and pipe materials together as the tubing cools to its final shape. Both propane torches and catalytic heaters can be used as the heat source.

Physical properties of the HST reportedly were better than those of currently used joint materials:

> The coupling of commercial sewer pipe, both butt-end and bell and spigot, with watertight joints using heat shrinkable plastic tubing is feasible and economically practical. Used in conjunction with a hot melt adhesive it can surpass in physical and chemical strength any of the conventional joints presently being used with clay, concrete, and asbestos-cement nonpressure sewer pipe. [27]

Operationally and from a design standpoint, the aforementioned factors are taken into account by considering (1) the food-to-microorganism ratio, (2) the sludge retention time, and (3) the hydraulic detention time.

The food-to-microorganism ratio is defined as the kilograms of BOD_5 (food) applied per unit time (often taken as the amount consumed) per kilogram of organisms in the system. The sludge age is defined by the kilograms of organisms wasted per day. The hydraulic detention time is defined as the value, given in units of time, obtained by dividing the volume of the reaction vessel by the flow rate.

Because the food-to-microorganism ratio and the sludge retention times are interrelated [17], both are commonly used in the design of biological systems. From field observations and laboratory studies, it has been found that as the sludge age is increased and, correspondingly, the food-to-microorganism ratio decreased, the settling characteristics of the organisms in the system are enhanced, and they can be removed easily by gravity settling. Typical values for the food-to-microorganism ratio and sludge age are given in reference [17].

As previously noted, the length of time the biomass is in contact with the waste BOD_5 is measured by the hydraulic detention time. The minimum time to achieve a given removal is dependent upon the food-to-microorganism ratio. Low ratios (i.e., a high number of bacteria per kilogram of BOD_5) allow faster utilization of a given amount of BOD_5. The minimum time required may vary considerably, from 10 to 15 minutes in contact stabilization, or less for trickling filters and rotating biological contactors, and up to 2 to 3 days for oxidation ponds. At the shorter contact times, the biomass only removes the dissolved matter and possibly some of the smaller colloidal matter [15]. At longer contact times, suspended organic matter is utilized.

In any biological system, these factors control the process. A mathematical model has been developed for the activated sludge system [17, 14]. Models for trickling filters, rotating biological contactors, and treatment lagoons have not been formulated. Empirical designs and design parameters are used instead.

APPLICATION TO COMBINED SEWER OVERFLOW TREATMENT

Biological treatment of wastewater, used primarily for domestic and industrial flows of organic nature, produces an effluent of high quality and is generally the least costly

include the maximum infiltration anticipated during the life of the sewer, while the construction allowance should be the maximum allowable infiltration at the time of construction. The construction infiltration will increase continuously throughout the life of the project. APWA has recommended the establishment of a construction infiltration allowance of 185 l/cm diameter/km/day (200 gal./inch diameter/mile/day) or less. This is not unreasonable in light of improvements in pipe and joint materials and construction methods.

Average and peak design flows should be related to the actual conditions for the area under design. Too often flow criteria are taken from a standard textbook. Adequate subsurface investigations should be undertaken to establish conditions that may affect pipe and joint selection or bedding requirements. Consideration should be given to the constructability and maintainability of the sewer system. This calls for direct communication between the designer and maintenance personnel.

Manholes should be designed with as few construction joints as possible. In recent years the development of custom-made precast manholes with pipe stubs already cast in place has reduced the problem of shearing and damage of connecting pipes. The use of flexible connectors at all joints adjacent to manholes reduces the possibility of differential settlement shearing the connecting pipes.

Manhole cover design is attracting serious attention in view of evidence that even small perforations can produce sizable contributions of extraneous inflow. A single 2.5-cm (1-inch) hole in a manhole top covered with 15.2 cm (6 inches) of water may admit 0.5 l/sec (11,520 gpd) [41]. Solid sealed covers should be used for manholes in areas subject to flooding. If solid covers are used, alternative venting methods must be used to admit air or remove sewer gases.

Construction considerations — The most critical factor relative to infiltration prevention is the act of construction. The capability of currently manufactured pipes and joints to be assembled allowing minimal infiltration must be coupled with good workmanship and adequate inspection, expecially at house connections.

Trenches should be made as narrow as possible but wide enough to permit proper laying of pipe, inspection of joints, and consolidation of backfill. Construction should be accomplished in dry conditions. If water is encountered

Plant capacity		Capital cost, $	Operation and maintenance cost, $/yr
cu m/sec	mgd		
1.1	25	1,580,000	44,000
2.2	50	2,390,000	55,000
4.4	100	4,370,000	98,000
8.8	200	7,430,000	129,000

The cost data are based on an ENR of 2000.

The operating costs are estimated to be $0.0382/1,000 l ($0.141/1,000 gal.) for 300 hours of operating per year. The high cost could easily be reduced, however, by designing the system to serve also as a dry-weather effluent polisher during periods with no storm flows.

CONCENTRATION DEVICES

Concentration devices, such as the swirl regulator/concentrator and helical or spiral flow devices, have introduced an advanced form of sewer regulator--one capable of controlling both quantity and quality. These devices have been previously described in Section VIII. A prototype swirl regulator has recently been constructed in Syracuse, New York. A second generation swirl concentrator has been placed into operation as a treatment unit for municipal sewage grit separation in Denver, Colorado. Settleable solids removals ranging from 65 to more than 90 percent, corresponding to chamber retention times of approximately 5 to 15 seconds, have been predicted on the basis of hydraulic model tests. At the time of writing, no operational data were available. Indicated costs are approximately $285/cu m/sec ($6,500/mgd). A third generation swirl device has been developed to take the place of conventional primary sedimentation at 10 to 20 minute detention times.

Identification of the drainage system includes a review of detailed maps of the sewer system; field checks of the line, grade, and sizes; and identification of sections and manholes that are bottlenecks.

To identify the scope of the infiltration, it is necessary to measure and record both dry- and wet-weather flows at key manholes. Groundwater elevations should be obtained simultaneously with sewer flow measurements.

A physical survey of the entire sewer system, or that portion of major concern, where every manhole is entered and sewers are examined visually to observe the degree and nature of deposition, flows, pipe conditions, and manhole condition should be made. Smoke testing may reveal infiltration sources only under low groundwater conditions. If the groundwater table is above the pipe, the smoke may be lost in the water. Soil conditions and groundwater conditions should also be noted.

An economic and feasibility study is necessary to determine the locations where the greatest amount of infiltration can be eliminated for the least expenditure of money. In some cases, it may be most cost effective to provide additional treatment capacity at the sewage treatment plant for the infiltration. Cost estimates can be developed for subsequent correctional stages as necessary.

Cleaning – A systematic program of sewer cleaning (1) can restore the full hydraulic capacity and self-scouring velocity of the sewer and its ability to convey infiltration without flooding; (2) can aid in the discovery of trouble spots, such as areas with possible breaks, offset joints, restrictions, and poor house taps, before any substantial damage is caused; and (3) is a necessary prerequisite to television and photographic inspection. It is one of the most important and useful forms of preventive maintenance. This type of program involves periodic cleaning on a regular, recurring basis.

By frequent hydraulic flushing of the sewers, the interval between mechanical cleanings of the sewer can be extended. This will be discussed in more detail later in this section.

Equipment used in cleaning falls into three general classifications: (1) rodding machines, (2) bucket machines, and (3) for small sewers, hydraulic devices. The rodding machine, which is used most commonly, removes heavy conglomerations of grease and root intrusions. The bucket machine utilizes two cables threaded between manholes. One cable

screen during the overflow event and stored in two 19-cu m (5,000-gal.) tanks for the test filtration runs that followed. Each tank had a mixer to keep solids in suspension. Two pumps were then used to supply the filter with screened water.

Removals for this filter were 65 percent for SS, 40 percent for BOD_5, and 60 percent for COD [22]. The addition of polyelectrolyte increased the SS removal to 94 percent, the BOD_5 removal to 65 percent, and the COD removal to 65 percent. Inorganic coagulants, such as lime, alum, and ferric chloride, did not prove as successful as polymers. Run times averaged 6 hours at loading rates of 58.7 cu m/hr/sq m (24 gpm/sq ft). Backwashing of the filters consisted of alternately injecting air and water into the bottom of the filter columns. Air volume was varied from 38.4 to 283 cu m/hr/sq m (2.1 to 15.5 scfm/sq ft) over 2.5 to 29 minutes. Backwash water volume used ranged from 1.9 to 8.6 percent of the total combined sewer overflow filtered, with a median value of approximately 4 percent. The range of backwash water rate used was 75.8 to 220 cu m/hr/sq m (31 to 90 gpm/sq ft) over 4 to 25 minutes.

A list of the basic design data is presented in Table 50.

Others – Two other filtration processes, fiber glass plug filtration [24] and coal filtration [34], show some promise, but additional research is necessary to perfect them. Other methods, such as crazed resin filtration, upflow filtration with garnet sand, and filtration using ultrasonically cleaned fine screens, have not been successful and are not considered worthy of further effort at the present time.

Advantages and Disadvantages

The advantages of dual-media filtration are that (1) relatively good removals can be achieved; (2) process is versatile enough to be used as an effluent polisher; (3) operation is easily automated; and (4) small land area is necessary. Disadvantages are that (1) costs are high; (2) dissolved materials are not removed; and (3) storage of backwash water is required.

Costs

Cost data were developed from a design estimate for 1.1, 2.2, 4.4, and 8.8 cu m/sec (25, 50, 100, and 200 mgd) filtration plants at a satellite location [22]. The basic plant as envisioned for the cost estimate includes a low lift pump

(1) replacement of broken sections, (2) insertion of various types of sleeves or liners, (3) internal sealing of joints and cracks with gels or slurries, and (4) external sealing by soil injection grouting. Additional detailed information is available in recent EPA reports on jointing materials [13, 41, 27] and sealants [29, 13, 41, 25].

The method most commonly used to correct structural defects and infiltration (in sections where major structural damage is not present) is internal sealing with gels or slurries.

The use of a chemical blocking method to seal sewer cracks, breaks, and bad joints is much more economical and feasible than sewer replacement or the inadequate concrete flooding method. With recent improvements in television and photographic inspection methods, sealing by chemical blocking appears to be an even more encouraging method than heretofore. Chemical blocking is accomplished by injecting a chemical grout and catalyst into the crack or break. A sealing packer is used to place the grout and catalyst. The packer has inflatable elements to isolate the leak, an air line for inflation, and two pipes for delivering the chemical grout and catalyst to the packer. An example of a packer is shown on Figure 20. During the repair the two inflatable end sections isolate the leak and chemical grout and catalyst are injected into the center section. Then the center section is inflated to force the grout from the annulus between the packer and the sewer wall into the leak. When the repair is complete, the packer is deflated and moved to the next repair location.

The current use of acrylamid gels as chemical blocking agents is restricted by their lack of strength and other physical limitations. Recently, improved materials, such as epoxy-based and polyurethane-based sealants, have been developed [29]. These new sealants have exhibited suitability even under conditions of erratic or intermittent infiltration where acrylamid gels failed because of repeated dehydration. The only difficulty in applying the new sealant materials has been that, because of the physical properties of the sealants, new application equipment incorporating a mixing mechanism is required. The cost of this new equipment is approximately the same as the existing equipment. Modification of existing packing equipment to accept the new sealants has been found to be feasible.

Sewers may also be sealed by inserting sleeves or liners, as discussed previously.

FILTRATION

Introduction

In the physical treatment processes, filtration is one step finer than screening. Solids are usually removed by one or more of the following removal mechanisms: straining, impingement, settling, and adhesion. Filtration has not been used extensively in wastewater treatment, because of rapid clogging which is principally due to compressible solids being strained out at the surface and lodged within the pores of the filter media. In stormwater runoff, however, a large fraction of the solids are discrete, noncompressible solids that are more readily filtered [30].

Effluents from primary or secondary treatment plants and from physical-chemical treatment facilities contain compressible solids.

The discussion on filters handling discrete, noncompressible solids is presented here.

Design Criteria

Two factors affecting removal efficiency are flux rate and the type of solids. As one would expect, the removals are inversely proportional to the flux rate. At high flux rates, solids are forced through the filters reducing solids removal efficiency. Suspended solids removals were found to be better for inert solids (discrete, noncompressible solids) than for volatile solids (compressible solids). This is the same conclusion found for microstrainers.

Loading Rates – The difference between filtering compressible and noncompressible solids is basically the flux rate used. High-rate filters handling compressible solids are normally loaded at 12.2 to 24.5 cu m/hr/sq m (5 to 10 gpm/sq ft), whereas those handling noncompressible solids will filter at rates up to 73.4 cu m/hr/sq m (30 gpm/sq ft).

Chemicals – Many polyelectrolytes and some coagulants have been tested. Some polyelectrolytes have been found which increase removals of phosphorus and nitrogen. It is cautioned, however, that polyelectrolytes are noted for their unpredictability and the most effective polyelectrolyte must be determined for each wastewater.

Demonstration Projects

Studies have been made to investigate possible filtration techniques for combined sewer overflows. The different

with grades too flat to be self-cleansing. However, such applications are relatively uncommon today. Because of the volume of flow required and the noted system limitations, stormwater applications to date have been limited to relatively small lateral sewers.

Cleansing deposited solids by flushing in combined sewer laterals with mild slopes (0.001 to 0.008) was studied using 30-cm (12-inch) and 46-cm (18-inch) clay sewer pipes, each 244 meters (800 feet) long [22]. Experimental data were then used to formulate a mathematical design model to provide an efficient means of selecting the most economical flushing system that would achieve a desired cleansing efficiency within the constraints set by the engineer and limitations of the design equations.

It was found that the cleansing efficiency of deposited material by periodic flush waves is dependent upon flush volume, flush discharge rate, sewer slope, sewer length, sewer flow rate, and sewer diameter. Neither details of the flush device inlet to the sewer nor slight irregularities in the sewer slope and alignment significantly affected the percent cleaning efficiencies.

Using sewage instead of clean water for flushing was found to cause a general, minor decrease in the efficiency of the cleansing operation. The effect is relatively small and is the result of the redeposition of solids by the trailing edge of the flush wave.

The effects of flush wave sequencing were found to be insignificant as long as the flush releases were made progressively from the upstream end of the sewer. Also, the cleansing efficiencies obtained by using various combinations of flush waves were found to be quite similar to those obtained using single flushes of equivalent volumes and similar release rates. However, both of these hypotheses are based on the limited findings from tests run on relatively short sewers. Therefore, further testing is required to give a complete picture of the relative importance of these two factors on the overall performance of a complete flushing system.

A prototype flush station developed during the study can be inserted in a manhole to provide functions necessary to collect sewage from the sewer, store it in a coated fabric tank, and release the stored sewage as a flush wave upon receipt of an external signal.

One prototype lateral flushing demonstration project was considered for an 11-ha (27-acre) drainage area in Detroit

has eight 152-cm (60-inch) diameter units operating in parallel. They are to be operated sequentially to accommodate flow variation. The screen size is 105 microns. Twelve static screens using 1,525-micron (0.06-inch) clear opening screen represent the third portion of the facility. These are the manufacturer's standard units that have been used in industry to remove gross solids. A description of a typical unit was presented above. The combined sewer overflow facilities are located across the Maumee River from Fort Wayne's sewage treatment plant. Flows entering the facilities are sewage treatment plant bypass and combined sewer overflows. These flows are lifted to the screens by pumps after passing through a bar screen. Chlorination and a contact tank are provided.

Costs

Microstrainers and Drum Screens – The costs reported for microstrainers vary considerably, as shown in Table 48. The main reason is the variation in flux rates or loading coupled with the type of waste treated (i.e., combined sewer overflows versus secondary effluent) [30]. With the exception of the Philadelphia facility, all of the microstrainers are used to treat sewage effluent at appreciably lower flux rates which necessarily increased the cost. During the Philadelphia study it was found possible to use a flux rate of 73.3 cu m/hr/sq m (30 gpm/sq ft); therefore, the costs at the three other locations listed in Table 48 have been modified to reflect this increase in loading rate. According to the figures presented in Table 48, the average capital cost is approximately $248/l/sec ($11,000/mgd) for treating combined sewer overflows. The operation and maintenance costs have not been adjusted. The approximate cost is $0.0013 to $0.0026/1,000 l ($0.005 to $0.01/1,000 gal.) for assuming 300 hours of operation per year. The single capital cost cited for a fine screen is only the equipment cost and does not include installation. Operation and maintenance costs should be comparable to those for microstrainers.

Rotary Fine Screens – Cost data for rotary fine screens for combined sewer overflows are based on a preliminary design estimate for a screening facility in Seattle, Washington, and actual construction costs at Fort Wayne, Indiana [38, 28]. The two costs were $700,000 and $250,000, for plants of 1,095 l/sec (25 mgd) and 1,640 l/sec (37.5 mgd), respectively. The differences in cost are due, in part, to the fact that the Fort Wayne installation is a demonstration prototype project where three types of screens operating in parallel are treating a total flow of 3,285 l/sec (75 mgd) in a single building. The cost for the rotary fine screen

associated with excess wet-weather flows are generally of short duration; thus, a marginally inadequate line can be bolstered by polymer injections at critical periods. In effect, this increases the overall treatment efficiency by allowing more of the flow to reach the treatment plant, while flooding from sewer surcharges is decreased.

The polymers tested in Richardson, Texas, included Polyox Coagulant-701, Polyox WSR-301, and Separan AP-30 [40]. The latter showed the greatest resistance to shear degradation (which may be important in very long channels) but was the least effective hydraulically. Tests conducted indicated that the polymers and nonsolvents were not detrimental to bacteria growth and therefore would not disrupt the biological treatment of sewage in wastewater treatment plants. Tests conducted on algae in a polymer environment indicated that the polymers have no toxic effects and only nominal nutrient effects. Fish bioassays indicated that in a polymer slurry concentration of 500 mg/l, some fish deaths resulted but that, in practice, concentrations above 250 mg/l would provide no additional flow benefits. It was reported that polymer concentrations of between 35 and 100 mg/l decreased flow resistance sufficiently to eliminate surcharges of more than 1.8 meters (6 feet) [40].

The Dallas Water Utilities District, Dallas, Texas has constructed a prototype polymer injection station (see Figure 21) for relief of surcharge-caused overflows at 15 points along a 2,440-meter (8,000-foot) stretch of the Bachman Creek sewer [36]. During storms, the infiltration ratio approaches 8 to 1. The sanitary sewer is 46 cm (18 inches) in diameter for the first 1,220 meters (4,000 feet) and then joins another 46-cm (18-inch) diameter sewer and continues on. The Dallas polymer injection station was built as a semiportable unit so that it can be removed and installed at other locations needing an interim solution once a permanent solution has been implemented at Bachman Creek.

The polymer injection unit is enclosed by a 1.3-cm (1/2-inch) steel sheet, 3.1 meters (10 feet) in diameter by approximately 7.9 meters (26 feet) in height. The upper half provides storage for 6,364 kg (14,000 lb) of dry polymer and also contains dehumidification equipment. The lower half contains a polymer transfer blower, a polymer hopper and agitator for dry feeding, a volumetric feeder and eductor, and appurtenances. The unit is entirely self-contained with only external power and water hookup necessary for the unit to be in operation.

drum speed with backwashing activation whenever headloss exceeds 6 inches. Collected solids are discharged to the float holding tanks. The screen size used in both cases was 297 microns.

Cleveland, Ohio [22] – The Cleveland, Ohio, study on dual-media filtration also included a fine screen as a pretreatment unit to the filtration process. The 420 micron screen was fitted over a 1.2 sq m (12.6 sq ft) drum unit. Drum speed and backwash conditions were not reported. More details on the layout of the facilities are given in this section under Filtration.

East Providence, Rhode Island [41] – This bench-scale study was conducted to test the applicability of using a drum screen and a diatomaceous earth filter in series to achieve significant removals when operating on combined sewer overflow. The study indicated good removals by the screening device in relation to other drum screens. The screening unit, however, was of different configuration than other drum screens. The device used was a small 259 sq cm (40 sq in.) unit consisting of a submerged rotating drum with the flow passing through the screen from the outside to the inside. Effluent was drawn off from the interior of the rotating drum. The backwash system ran continuously using submerged spray jets directed at the interior of the screen dislodging strained solids and allowing them to pass through ports separating dirty water from the rest of the influent water. Synthetic sewage was used during the study. Screen apertures tested were 150, 190, and 230 microns in size.

Portland, Oregon [38, 11] – A rotary fine screen unit was tested in Portland, Oregon, on both dry-weather flow and combined sewer overflows. The facility was constructed on a 183 cm (72-inch) diameter trunk sewer serving a 10,000-ha (25,000-acre) area. A portion of the flow was diverted to a bypass line where it first flowed through a bar screen before being lifted into the demonstration project by two 132 l/sec (2,100 gpm) turbine pumps. After passing through the rotary fine screen, both the concentrated solids and the effluent were returned to the Sullivan Gulch Pumping Station wet well. In a typical installation on a combined sewer overflow line, the effluent from the screens would pass to a receiving stream after disinfection. The concentrated solids would be returned to an interceptor sewer. The screening unit used a 152 cm (60-inch) diameter drum with 74, 105, and 167 micron screens. The units were operated at flow rates ranging from 43.2 to 126.2 l/sec (1 to 2.8 mgd). The range and levels of variables tested is listed in Table 47.

The unit is set up for fully automatic operation and may be started by any of three external level sensors located 458 meters (1,500 feet) upstream, at the injection site, and 458 meters (1,500 feet) downstream.

Several polymers were tested, and Polyox WSR-301 was chosen to be used when the Bachman Creek unit becomes operational. The polymer is expected to reduce the surcharge by 6.1 meters (20 feet) over the first 1,220-meter (4,000-foot) length. The maximum equipmental feed rate is expected to be 2.3 kg/min (5 lb/min). The actual polymer feed rate will be flow paced by the liquid level in the sewer to maintain a polymer concentration of about 150 ppm in the sanitary sewer. The unit is capable of supplying a dosage of 500 to 600 mg/l if needed. It is expected that the unit will be in operation about five times per year and that surcharge reduction will be complete in approximately 7 minutes after start of polymer injection (travel time in the affected reach of sewer).

The actual construction cost for the unit, including installation of the site, was $146,000 (ENR 2000). The unit was scheduled to be operable by mid-1973 with operational performance and data available one year thereafter. Maintenance is expected to be limited to a site visit and unit exercise every 2 months.

REGULATORS

Historically, combined sewer regulators represent an attempt to intercept all dry-weather flows, yet automatically provide for the bypass of wet-weather flows beyond available treatment/interceptor capacity. Initially, this was accomplished by constructing a low dam (weir) across the combined sewer downstream from a vertical or horizontal orifice as shown on Figure 22. Flows dropping through the orifices were collected by the interceptor and conveyed to the treatment facility (see Figure 19). The dams were designed to divert up to approximately 3 times the average dry-weather flow to the interceptor with the excess overflowing to the receiving water. Eventually more sophisticated mechanical regulators were developed in an attempt to improve control over the diverted volumes. No specific consideration was given to quality control.

Recent research, however, has resulted in several regulators that appear capable of providing both quality and quantity control via induced hydraulic flow patterns that tend to separate and concentrate the solids from the main flow [10, 50, 15]. Other new devices promise excellent quantity control without troublesome sophisticated design.

than pumping if resuspension in water is to be avoided. This is one of the screening methods currently being tested for combined storm overflows at Fort Wayne, Indiana [28, 43]. The installed units are to handle 767 l/sec (17.5 mgd) using screens with openings of 1,525 microns (0.060 inch).

Advantages and Disadvantages – The four basic screening devices have been developed to serve one of two types of applications. The microstrainer is designed as a main treatment device that can remove most of the suspended contaminants found in a combined sewer overflow. The other three devices--drum screens, rotary fine screens, and hydraulic sieves--are basically pretreatment units designed to remove the coarser material found in waste flows. The advantages and disadvantages of each type are listed in Table 46.

Description of Demonstration Projects

Philadelphia, Pennsylvania – The use of a microstrainer to treat combined sewer overflows has been studied in Philadelphia [26, 27]. The facility includes microstraining and disinfection. The microstrainer was a 5-foot diameter by 3-foot long unit using either 35- or 23-micron screen openings during the various tests conducted. The drum was operated submerged at 2/3 of its depth. The complete unit was equipped to automatically control drum speed proportional to the headloss across the screen, with continuous backwash, and with an ultraviolet irradiation source to prevent fouling of the screen by bacterial slimes. The unit starts automatically whenever sufficient overflow occurs. Because of the physical configuration of the sewer, flow was pumped to the microstrainer. However, it is recommended that pumping be avoided whenever possible since large solids that would be readily removed by microstraining are broken up by the pumping. The study was conducted in three phases: (1) operation of full screen area using the 35 micron screen, (2) operation at full screen area using 23 micron screen, and (3) operation at 20 percent of the screen area using the 23 micron screen. The latter was to test increased loading rates since the facility had a limited pumping capacity. The facilities operated approximately 40 times per year on combined sewer overflows.

Milwaukee and Racine, Wisconsin [40] – The use of fine screens to remove most of the coarse solids at Milwaukee and Racine has been briefly described previously under Dissolved Air Flotation. One unit was used at Milwaukee and six are used at Racine. They operate at a continuous

Conventional Designs

Conventional regulators can be subdivided into three major groups: (1) static, (2) semiautomatic dynamic, and (3) automatic dynamic. The grouping reflects the general trend toward the increasing degree of control and sophistication and, of course, the capital and operation and maintenance costs. Conventional regulator design, use, advantages, and disadvantages are well covered in the literature [10, 11, 32].

Static Regulators – Static regulators can be defined as fixed-position devices allowing little or no adjustment after construction.

Static regulators consist of horizontal or vertical fixed orifices, manually operated vertical gates, leaping and side-spill weirs and dams, and self-priming siphons. Typical static regulators are shown on Figure 23. With the exception of the vertical gate, which does not often move, they have no moving parts. Thus, they provide only minimal control, and they are least expensive to build, less costly to operate, and somewhat less troublesome to maintain. In view of the increasingly more stringent receiving water discharge limitations and the rising need of providing stormwater capacity in treatment plants, it is expected that the use of conventional static regulators will decline. System control, to utilize maximum capacity in the interceptor, requires flexibility virtually nonexistent with static regulators. Maintenance, with the exception of the vertical gate, is mostly limited to removal of debris blocking the regulator opening.

Semiautomatic Dynamic Regulators – Semiautomatic dynamic regulators can be defined as those which are adjustable over a limited range of diverted flow and contain moving parts but are not adaptable to remote control.

The family of semiautomatic dynamic (having moving parts) regulators consists of float-operated gates, mechanical tipping gates, and cylindrical gates. Typical semiautomatic dynamic regulators are shown on Figure 24. All require separate chambers to allow access for adjustment and maintenance. As a rule this group is more expensive to construct and to maintain than static regulators. They are more susceptible to malfunction from debris interfering with the moving parts and are subject to failure due to the corrosive environment. However, better flow control is provided because they respond automatically to combined sewer and interceptor flow variations. The adjustment of

Screen cleaning – In the studies conducted on the rotary fine screen [38, 11], blinding (clogging of the screen) has been a problem. Blinding has been attributed to oil, grease, and industrial waste from a paint manufacturer. This problem is similar to that experienced during the development of microstrainers. The latest study at Shore Acres, California, solved this problem by enforcing an industrial waste ordinance prohibiting discharge of oil wastes to the sewer system.

To improve backwashing, a solution of hot water and liquid solvent or detergent has been found necessary to obtain effective cleaning of the screens. This may have been necessary only because of the nature of the common waste encountered in both studies [38, 11]. Of the solvents tested, acidic and alcoholic agents did not adequately clean the screens. Alkaline agents were reported not effective by Portland [11], but Cornell, Howland, Hayes & Merryfield [38] reported a caustic solution was the most efficient solvent. Chloroform, solvent parts cleaner, soluble pine oil, ZIF, Formula 409, and Vestal Eight offered limited effectiveness. ZEP 9658 cleaned the screens effectively, but this cleaner was not analyzed to determine its effect on effluent water quality. The removal of paint was done effectively only by hand cleaning using ZEP 9658.

Screen life – In the first study [38], the average screen life was approximately 4 hours. In a study conducted a year later [11] using a similar unit incorporating a new screen design and a rotational speed of 65 rpm, the average screen life was 34 hours. Reducing the rotational speed to 55 rpm increased the average screen life to 346 hours. Results of a subsequent study at Shore Acres, California, indicate that screen life may exceed 1 year. This extended life, however, is most likely attributable to the much lower hydraulic loading rate, 39.5 versus 123 l/sec (0.9 versus 2.8 mgd) or 30 versus 97 l/sec/sq m (44 versus 143 gpm/sq ft). The present predicted screen life is 1,000 hours. Some screen failures were attributed to punctures caused by objects present in the feed waters.

Design parameters – The design and operating parameters of the rotary fine screen are presented in Table 45. No mathematical modeling of the rotary fine screen has been performed. Further tests of the rotary fine screen are needed to determine more accurately the life of the screens, the removal efficiencies, and design parameters.

Two points should be remembered with respect to rotary fine screens: (1) waste flows from the rotary fine screen range from 10 to 20 percent of the total flow treated and may contain solvents that may be difficult to treat downstream;

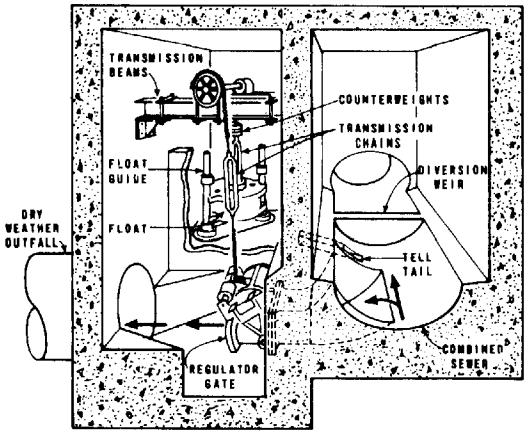

(a) AUTOMATIC SEWER REGULATOR [32]
(BROWN AND BROWN TYPE A).

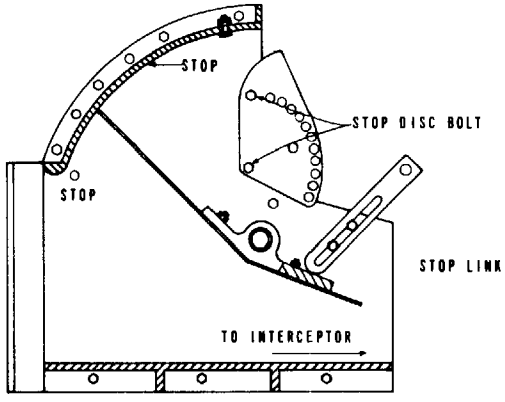

(b) TIPPING GATE REGULATOR [11]
USED BY ALLEGHENY COUNTY SEWAGE AUTHORITY

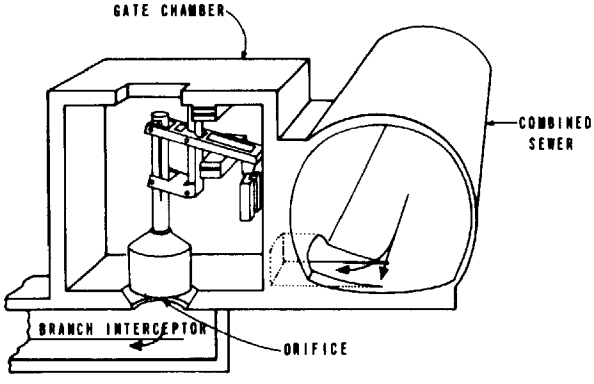

(c) CYLINDRICAL GATE REGULATOR [10]

Figure 24. Typical semiautomatic dynamic sewer regulators

Table 44. RECOMMENDED MICROSTRAINER DESIGN PARAMETERS FOR COMBINED SEWER OVERFLOW TREATMENT

Screen opening, microns	
Main treatment	23-35
Pretreatment	150-420
Screen material	Stainless steel
Drum speed, rpm	
Maximum speed	5-7
Operating range	0-max speed
Flux rate of submerged screen, gpm/sq ft	
Low rate	5-10
High rate	20-50
Headloss, in.	6-24
Submergence of drum, %	60-80
Backwash	
Volume, % of inflow	<0.5-3
Pressure, psi	40-50
Type of automatic controls	Drum speed proportional to headloss

Note: gpm/sq ft x 0.679 = l/sec/sq m
psi x 0.0703 = kg/sq cm

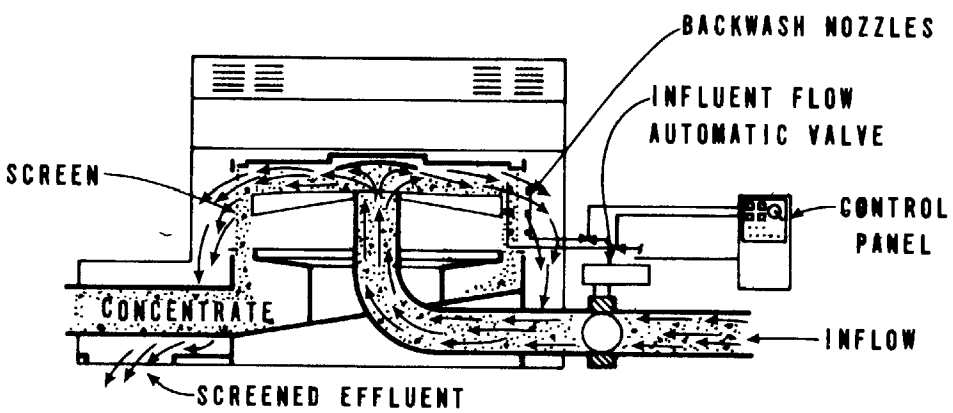

Figure 49. Rotary fine screen schematic [11]

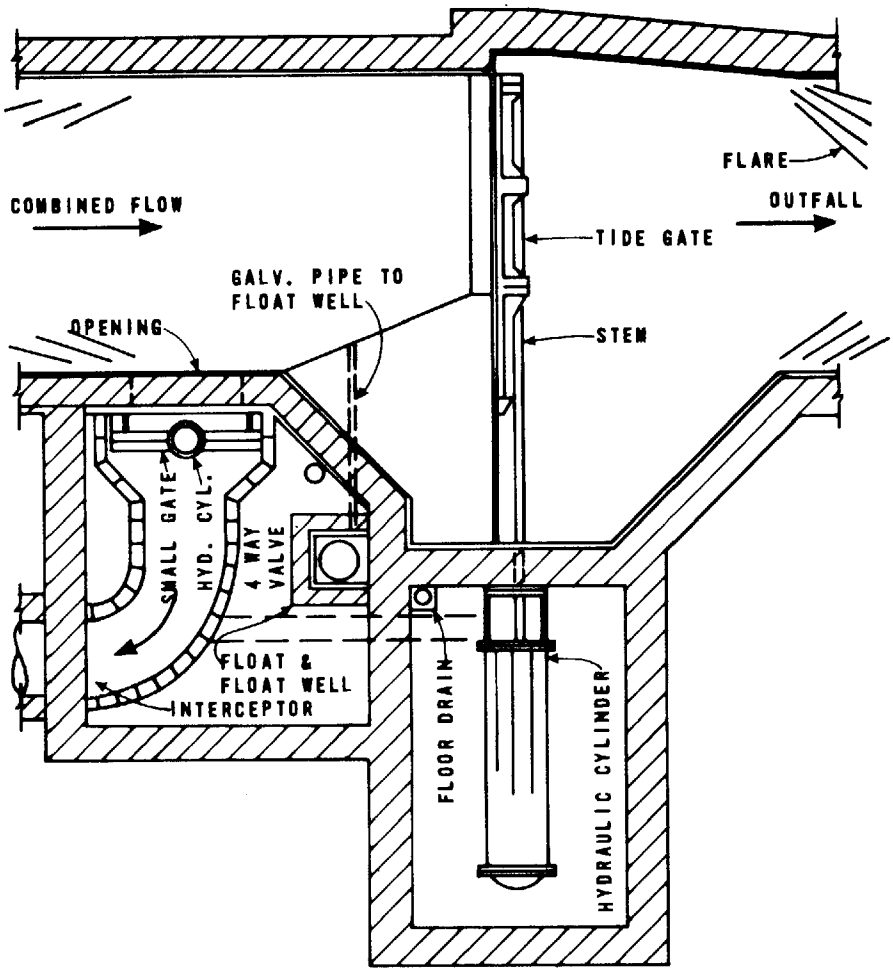

CYLINDER - OPERATED GATE REGULATOR

PHILADELPHIA [11]

Figure 25. Typical automatic dynamic sewer regulator

Table 43. DATA SUMMARY ON MICROSTRAINERS AND DRUM SCREENS

Location	Reference number	Screen opening, micron	Screen area: Total, sq ft	Screen area: Submerged, sq ft	Screen area: Submerged, %	Flux rate, gpm/sq ft	Headloss, in.	Backwash: Pressure, psi	Backwash: % of total flow
(1)	(2)	(3)	(4)	(5)	(6)	(7)	(8)	(9)	(10)
Philadelphia, Pa.	[27]	23	9.4	7.4	78	40	23	40	<0.5
	[26]	23	9.4	7.4	78	25	12[a]	40	NA[b]
	[26]	23	47.0	28[a]	60[a]	9.1	4.7[a]	40	NA
	[26]	23	47.0	35[a]	74[a]	6.9	3.6[a]	40	NA
	[26]	35	47.0	35[a]	74[a]	5.4	3.4[a]	40	NA
Milwaukee, Wis.	[40]	297	144.0	72-90	51-64	40-50	12-14 max	1[d]	0.85[e]
Cleveland, Ohio	[22]	420	12.6	NA	NA	100	NA	NA	NA
Lebanon, Ohio	[6]	23	15.0	9	60	~7.0	6 max	NA	5.3
Chicago, Ill.	[23]	23	314.0	NA	NA	6.6	6 max	20-55	3.0
Letchworth, England	[35]	23	47.0	NA	NA	3.1	NA	NA	NA
Lebanon, Ohio	[6]	35	15.0	9	60	~7.0	6 max	NA	5.3
East Providence, R.I.	[41]	150	0.28	0.28	100[f]	18-25	NA	NA	28
	[41]	190	0.28	0.28	100[f]	18-25	NA	NA	28[f]
	[41]	230	0.28	0.28	100[f]	18-25	NA	NA	28

Table 43 continued on page 243.

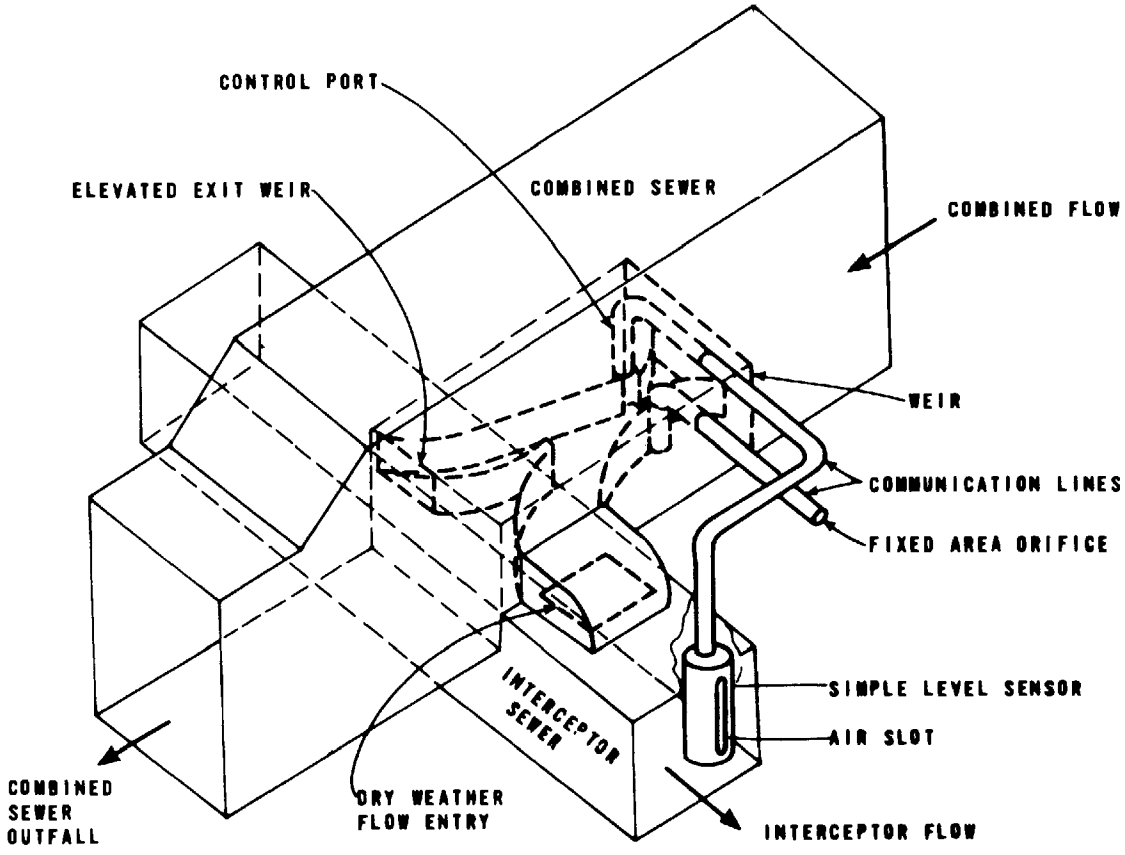

Figure 26. Schematic arrangement of a fluidic sewer regulator [10]

is induced by the kinetic energy of the sewage entering the tank (see Figure 27). Flow to the treatment plant is deflected, and discharges through a pipe at the bottom near the center of the channel. Excess flow in storm periods discharges over a circular weir around the center of the tank and is conveyed to receiving waters. The rotary motion causes the sewage to follow a long path through the channel thus setting up secondary flow patterns which create an interface between the fluid sludge mass and the clear liquid. The flow containing the concentrated solids is directed to the interceptor. Using synthetic sewage in model studies at Bristol, England, suspended solids removal efficiencies of up to 98 percent were reported [47]. Another series of experiments elsewhere on a model vortex regulator using raw sewage indicated poor performance in removing screenable solids under certain conditions [1]. This lack of overflow

preliminary and more work is needed to verify them at a larger scale and at the Philadelphia pilot plant site.

Screen cleaning – Of the several conditions which affect the operation of the microstrainer and drum screen, the most notable is proper cleaning of the screen. Spray jets, located on the outside of the screen at the top of the drum, are directed in a fan shape onto the screen. It has been found that the pressure of this backwash spray is more important than the quantity of the backwash [13, 6]. There does not seem to be any relationship between the volume of backwash water applied and the hydraulic loading of the microstrainer or drum screen. Thus, a constant backwash rate can be applied regardless of the hydraulic loading [23]. Results of tests at Philadelphia have indicated no backwashing problems.

Occasionally the microstrainer and, to a lesser degree, the drum screen cannot be effectively cleaned by the backwash jets. This condition, called "blinding" of the screen, is generally associated with oil, grease, and bacterial growths [13, 41, 23, 6]. Oil and grease cannot be removed effectively without using a detergent or other chemical, such as sodium hypochlorite, in the backwash water [6]. Generally, microstrainers and drum screens with the finer screen openings (<147 microns) should not be used in situations where excessive oil and grease concentrations are likely to be encountered from a particular drainage area. Bacterial growths also have caused blinding problems on microstrainers, although they have not been a major problem with drum screens. The use of ultraviolet light is an effective means of control, as mentioned previously. It is important, however, to use an ultraviolet light source of the proper frequency designed to minimize the amount of ozone created [29]. With proper construction of the microstrainer it is possible to reduce the chances of the creation of ozone [26].

Screen life – In a wet environment, ozone is relatively corrosive to the stainless steel screens. Since screens are woven with very fine stainless steel wires, the amount of corrosion needed to break through a strand of the wire is small [29]. In fact, it has been reported that ozone in a wet environment is more corrosive to the stainless steel wires than chlorine in a wet environment [29]. Therefore, it is important to reduce the concentration of ozone and/or chlorine in and around the microstrainer. Both chlorine and ozone have been used upstream of the microstrainer, but enough detention time has been allowed so that concentrations of these chemicals are relatively low. It is better

regulator and the swirl regulator/concentrator is the flow field pattern. Another major difference is that larger flow rates can be handled in the prototype swirl regulator/concentrator (at Lancaster, Pennsylvania, the estimated increase is 4 to 6 times greater) than in the equivalent size vortex regulator.

A hydraulic laboratory model was used to determine geometric configuration and settleable solids removal efficiencies. Figure 28 shows the hydraulic model in action. Note the solids separation and concentration toward the underflow pipe to the treatment plant.

As a result of both mathematical and hydraulic modeling, the performance of the prototype has been predicted. Based upon a peak storm flow to peak dry-weather flow ratio of 55 to 1, 90 percent of the solids (grit particles with a specific gravity of 2.65, having a diameter greater than 0.3 mm and settleable solids with a specific gravity of 1.2, having a diameter larger than 1.0 mm) are concentrated into 3 percent of the flow [50, 15]. Hydraulic testing indicates that removal efficiency increases as the peak storm flow to peak dry-weather flow decreases. The recommended configuration for the swirl regulator/concentrator is shown on Figure 29.

The foul-sewer channel in the bottom of the swirl concentrator is sized for peak dry-weather flow. During wet-weather flows the concentrated settleable solids are carried out the foul-sewer into an interceptor.

There are no moving parts so maintenance and adjustment requirements are minimal. Fine tuning control is provided via a separate chamber with a cylinder gate on the "foul sewer" outlet to the interceptor. Remote control, although not readily adaptable, could be accomplished by providing a larger-than-necessary foul sewer (also diminishes the chances of clogging) and throttling this line with a remotely controlled gate.

Spiral Flow Regulator – The spiral flow regulator is based on the concept of using the secondary helical motion imparted to fluids at bends in conduits to concentrate the settleable solids in the flow. A bend with a total angle between 60 and 90 degrees is employed. Hydraulic model studies of this device, carried out at the University of Surrey, England [44], indicated that this is a feasible

size of the screen openings because this determines the initial size of particles removed. The efficiencies of a microstrainer and drum screens treating a waste with a normal distribution of particle sizes will increase as the size of screen opening decreases. Suspended solids removals reported in various studies within the United States bear this out, as shown on Figure 48 [41, 26, 40, 22, 35, 27, 23]. In reality, however, removals are based on the relative sizes between the screen opening and the particle size. A drum screen with a large screen opening can achieve high removals if the majority of the solids in the waste flows are larger than the screen opening. It appears important not to pump ahead of microstrainers because this tends to break up fragile particles and thereby reduce removal efficiencies. The use of positive displacement pumps or spiral pumps may be permissible.

The second most important condition affecting removal efficiencies, especially for microstrainers, is the thickness of filtered material on the screen. Whenever the thickness of this filter mat is increased, the suspended matter removal

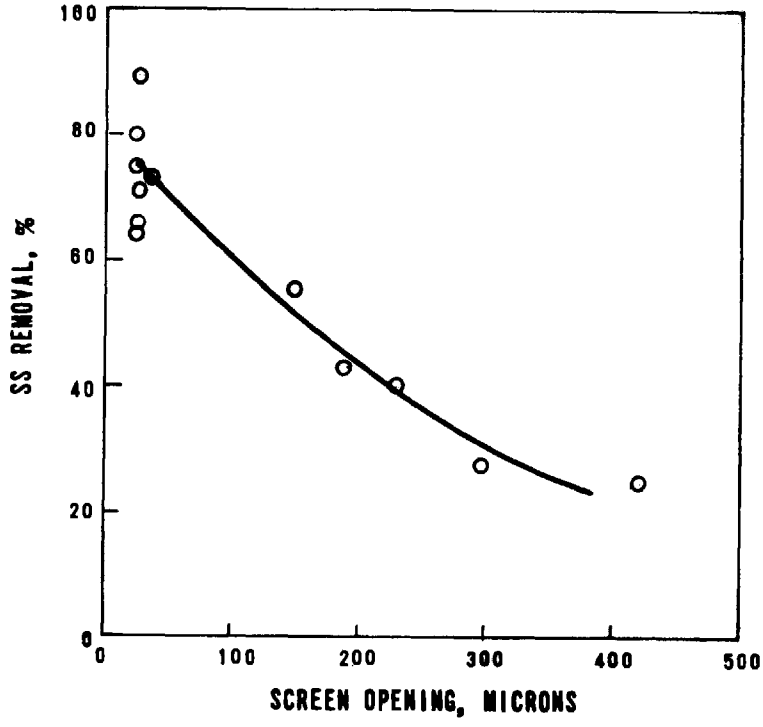

Figure 48. SS removal versus screen opening

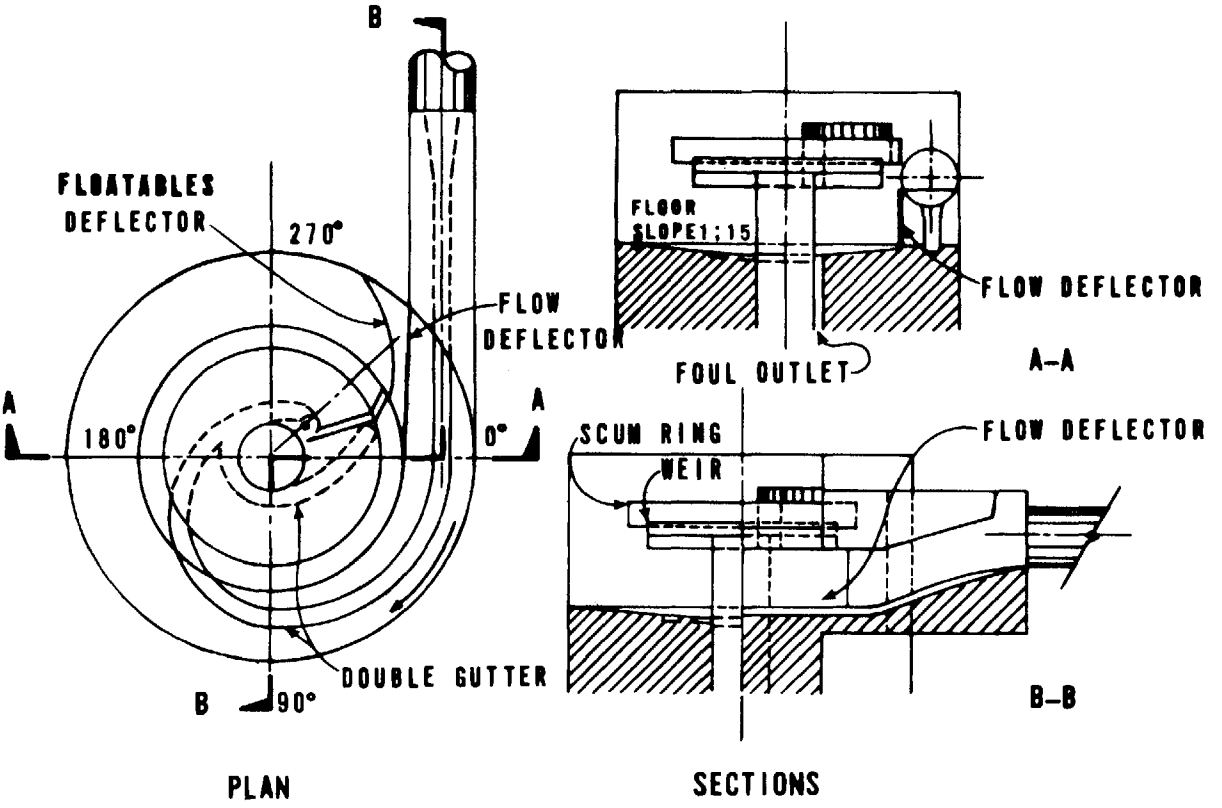

Figure 29. Recommended configuration for swirl concentrator [50]

means of separating solids from the overflow. The simplest form of the regulator is shown on Figure 30.

The heavily polluted sewage is drawn to the inner wall. It then passes to a semicircular channel situated at a lower level leading to the treatment plant. The proportion of the concentrated discharge will depend on the particular design. The overflow passes over a side weir for discharge to the receiving waters. Surface debris collects at the end of the chamber and passes over a short flume to join the sewer conveying the flow to the treatment plant.

The authors of the model study report that even the simplest application of the spiral flow separator will produce an inexpensive regulator that will be superior to many existing types. They also stated that further research is necessary to define the variables, the limits of applications, and the actual limitations of the spiral flow

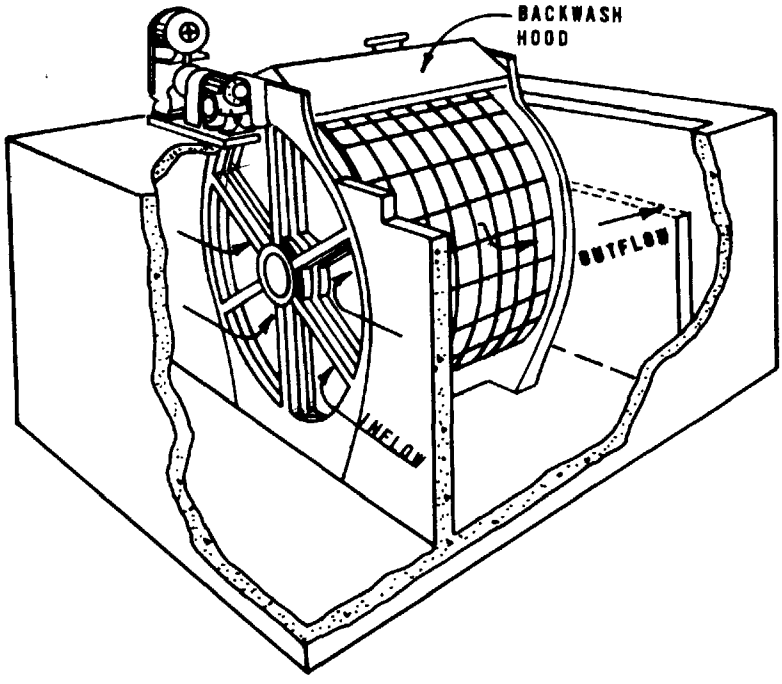

Figure 47. Schematic of a microstrainer or drum screen

The drum was completely submerged within an influent tank, and flow passed inward through the circumference of the drum. Submerged backwash jets were placed inside the drum.

Screen openings for microstrainers range from 15 to 65 microns and for drum screens, from 100 to 600 microns. The various sizes of screen openings that have been tested on combined sewer overflows, and other data, are listed in Table 42.

Microstrainers and drum screens can be used in many different treatment schemes. Their versatility comes from the fact that the removal efficiency is adjustable by changing the aperture size of the screen placed on the unit. The primary use of microstrainers would be in lieu of a sedimentation basin to remove suspended matter. They can also be used in conjunction with chemical treatment, such as ozone or chlorine for chemically disinfecting/oxidizing both organic and nonorganic oxidizable matter or microorganisms

regulator [44]. A prototype regulator has been successfully evaluated at Nantwich, England. A third generation device is being developed for American practice.

Stilling Pond Regulator – The stilling pond regulator, as used in England, is a short length of widened channel from which the settled solids are discharged to the interceptor [1]. Flow to the interceptor is controlled by the discharge pipe which is sized so that it will be surcharged during wet-weather flows. Its discharge will depend on the sewage level in the regulator. Excess flows during storms discharge over a transverse weir and are conveyed to the receiving waters. The use of the stilling pond may provide time for the solids to settle out when the first flush of stormwater arrives at the regulator and before discharge over the weir begins.

This type of regulator is considered suitable for overflows up to 85 l/sec (30 cfs). If the stilling pond is to be successful in separating solids, it is suggested that not less than a 3-minute retention be provided at the maximum rate of flow [34].

High Side-Spill Weirs – Unsatisfactory experience with side-spill weirs in England has led to the development of a high side-spill weir, referred to there as the high double side-weir overflow. These weirs are made shorter and higher than would be required for the normal side-spill weir. The rate of flow to the treatment plant may be controlled by use of a throttle pipe or a float-controlled mechanical gate.

The ratio of screenings in the overflow to screenings in the sewage passed on to treatment was 0.5, the lowest of the four types investigated in England. This device has the best general performance when compared to the English vortex and stilling pond regulators and the low side-overflow weir [1].

Tide Gates – Tide gates, backwater gates, or flap gates are used to protect the interceptors and collector sewers from high water levels in receiving waters and are considered a regulating appurtenance when used for this purpose.

Tide gates are intended to open and permit discharge at the outfall when the flow line in the sewer system regulator chamber produces a small differential head on the upstream face of the gate. Some types of gates are sufficiently heavy to close automatically, ahead of any water level rise in the receiving body. With careful installation and balancing, coupled with an effective preventive maintenance program, the ability of the gate to open during overflow

the same as for their use in dry-weather treatment facilities. The reader is referred to the literature for the necessary details [25]. Except for bar screens, their use for combined sewer overflows may be limited. Coarse screens are used as a pretreatment and protection device at the Cottage Farm Detention and Chlorination Facility in Boston. Bar screens are recommended for almost all storage and treatment facilities and pump stations for protection of downstream equipment. Typical screenings from a 1-inch bar screen are shown on Figure 46.

Fine Screens and Microscreens – Fine screens and microscreens are discussed together because in most cases they operate in a similar manner. The types of units found in these classifications are rotating fine screens, hereinafter referred to as drum screens; microscreens, commonly called microstrainers; rotary fine screens; and hydraulic sieves (static screens); vibrating screens; and gyratory screens. To date, vibrating screens and gyratory screens have not been used in prototype combined sewer overflow treatment facilities.

Description of Screening Devices

Microstrainers and Drum Screens – The microstrainer and drum screen are essentially the same device but with different screen aperture sizes. A schematic of a typical unit is shown on Figure 47. They are a mechanical filter using a variable, low-speed (up to 4 to 7 rpm), continuously backwashed, drum rotating about a horizontal axis and operating under gravity conditions. The filter usually is a tightly woven wire mesh fabric (called screen) fitted on the drum periphery in paneled sections. The drum is placed in a tank, and wastewater enters one end of the drum and flows outward through the rotating screen. Seals at the ends of the drum prevent water from escaping around the ends of the drum into the tank. As the drum rotates, filtered solids, trapped on the screen, are lifted above the water surface inside the drum. At the top of the drum, the solids are backwashed off the screen by high-pressure spray jets, collected in a trough, and removed from the inside of the drum. In most cases, both the rotational speed of the drum and the backwash rate are adjustable. Backwash water is usually strained effluent. The newer microstrainers use an ultraviolet light irradiation source alongside the backwash jets to prevent growth of organisms on the screens [36]. The drum is submerged from approximately two-thirds to three-quarters of its diameter.

As noted previously, the usual flow pattern is radially outward through the screen lining the drum; however, one drum screen application used a reverse flow pattern [41].

> Regulators and their appurtenant facilities should be recognized as devices which have the dual responsibility of controlling both quantity and quality of overflow to receiving waters, in the interest of more effective pollution control. [50]

As mentioned previously, new regulator devices have been developed that provide both quantity and quality control. These include electrode potential along with the swirl regulator/concentrator, spiral flow regulator, vortex regulator, and high side-spill weir. Thus, in the future, the choice of a regulator must be based on several factors including: (1) quantity control, (2) quality control, (3) economics, (4) reliability, (5) ease of maintenance, and (6) the desired mode of operation (automatic or semiautomatic).

Regulator Costs – Selected installed construction costs are shown in Table 29. These costs are to be used for order-of-magnitude reference only because of the wide variance of construction problems, unit sizes, location, number of units per installation, and special appurtenances.

The cost of maintaining sewer regulators as reported in a recent national survey also vary widely [10]. In most cases, the reported expenditures are probably not adequate to maintain the regulators in completely satisfactory condition. The annual cost per regulator required to conduct a minimal maintenance program is listed in Table 29.

REMOTE MONITORING AND CONTROL

One alternative to the tremendous cost and disruption caused by sewer separation is to upgrade existing combined sewer systems by installing effective regulators, level sensors, tide gates, rain gage networks, sewage and receiving water quality monitors, overflow detectors, and flowmeters and then apply computerized collection system control. Such system controls are being developed and applied in several U.S. cities. The concepts of control systems have been introduced in Section VI. As applied to collection system control, they are intended to assist a dispatcher (supervisor) in *routing and storing combined sewer flows to make the most effective use of interceptor and line capacities.* As the components become more advanced and operating experience grows, system control offers the key to total integrated system management and optimization.

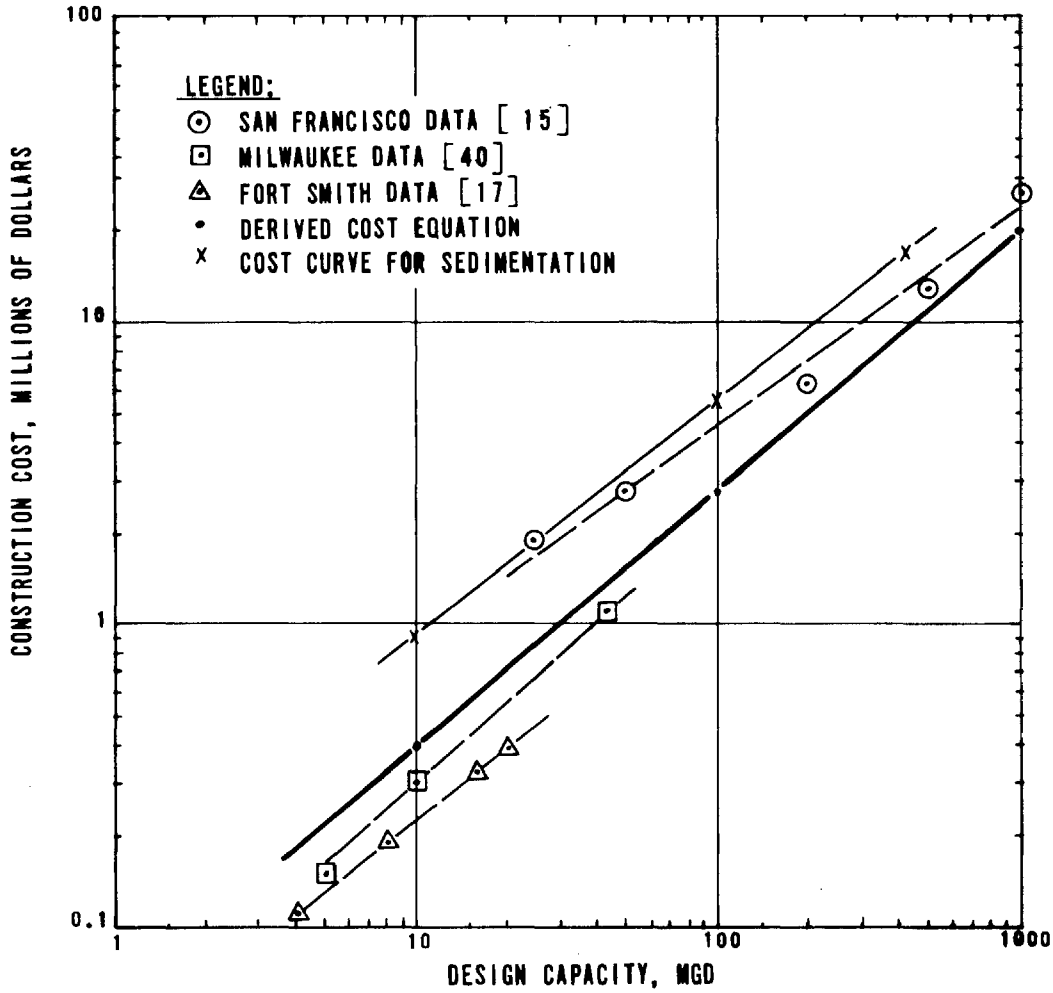

NOTE: MGD X 43.808 = L/SEC

Figure 45. Construction cost versus design capacity for dissolved air flotation, ENR 2000

System Components and Operations

The components of a remote monitoring and control system can be classified as either intelligence, central processing, or control.

The intelligence system is used to sense and report the minute-to-minute system status and raw data for predictions. Examples include flow levels, quantities, and (in some cases) characteristics at significant locations throughout the system; current treatment rates, pumping rates, and gate (regulator) positions; rainfall intensities; tide levels; and receiving water quality.

Quality observations and comparisons may assist in determining where *necessary* overflows can be discharged with the least impact. The central processing system is used to compile, record, and display the data. Also, on the basis of prerecorded data and programming, the processer (computer) may convert, for example, flow levels and gate positions into estimates of volumes in storage, overflowing, and intercepted and may compute and display remaining available capacities to store, intercept, treat, or bypass additional flows.

The control system provides the means of manipulating the system to maximum advantage. The devices include remotely operated gates, valves, inflatable dams, regulators, and pumps. Reactions to actuated controls and changed conditions (i.e., increased rainfall, pump failure, and blocked gate), of course, are sensed by the intelligence system, thus reinitiating the cycle.

Representative elements of a typical system are shown on Figure 31.

Because of the frequency and repetitiveness of the sensing and the short time span for decision-making, computers must form the basis of the control system. The complexity of the hydrology and hydraulics of combined systems also dictates the need for extensive preprogramming to determine cause-effect relationships accurately and to assist in evaluating alternative courses of action. To be most effective, real-time operational control must be a part of an overall management scheme included in what is sometimes called a "systems approach."

System Control

Before storm flow collection system control can be implemented, the direction, intensity, and duration of the storm

Table 39. SUMMARY OF PERFORMANCE CHARACTERISTICS, BAKER STREET DISSOLVED AIR FLOTATION FACILITY [16] SAN FRANCISCO, CALIFORNIA

	Effluent concentration, mg/l		Removal efficiency, %		
Constituent	Maximum	Minimum	Maximum	Minimum	Average
BOD_5	114.0	34.0	70.5	13.5	46.1
COD	205.0	53.0	77.0	10.8	44.4
Settleable solids	15.0	<0.1	93.5	0.0	47.7
Oil and grease	26.3	3.3	63.2	0.0	29.1
Floatables	0.57	<0.01	100.0	60.0	95.2
Total coliform	2.4×10^5 [a]	<30 [a]	>99.99	99.44	99.92
Fecal coliform	2.4×10^5 [a]	<30 [a]	>99.99	99.44	99.91
Total nitrogen	20.1	10.6	53.0	0.0	18.4
Orthophosphate	4.45	<0.07	99.0	43.4	80.9
Color	22.0	2.0	95.0	15.8	57.3

a. MPN/100 ml

Advantages and Disadvantages

The advantages of dissolved air flotation are that (1) moderately good SS and BOD_5 removals can be achieved; (2) the separation rate can be controlled by adjusting the amount of air supplied; (3) it is ideally suited for the high amount of SS found in combined sewer overflows; (4) capital cost is moderate owing to high separation rates, high surface loading rates, and short detention times; and (5) the system can be automated. Disadvantages of dissolved air flotation include: (1) dissolved material is not removed without the use of chemical additions; (2) operating costs are relatively high compared to other physical processes; (3) greater operator skill is required; and (4) provisions must be made to prevent wind and rain from disturbing the float.

should be known so that runoff quantities may be anticipated. Thus, the rain gage network forms an integral part of the system. Once the storm starts affecting the collection system, the flow quantity and movements must be known for decision-making, control implementation, and checking out the system response. The advantages of knowing whether or not an overflow is occurring are obvious, but consider the added advantage of knowing at the same time that the feeder line is only half full and/or that the interceptor/treatment works are operating at less than full capacity. By initiating controls, say closing a gate, the control supervisor can force the feeder line to store flows until its capacity is approached, or can increase diversion to the interceptor, or both. If he guesses wrong, the next system scan affords him the opportunity to revise his strategy accordingly.

Thus, system control or management converts the combined sewer system from an essentially static system to a dynamic system where the elements can be manipulated or operated as changing conditions dictate.

The degree of automatic control or computer intelligence level varies among the different cities. For example, in Cincinnati, monitoring to detect unusual or unnecessary overflows is applied and has been evaluated as being successful [5]. In Minneapolis-St. Paul, the Metropolitan Sewer Board is utilizing a central computer that receives telemetered data from rain gages, river level monitors, sewer flow and level sensors, and mechanical gate diversion points to assist a dispatcher in routing stormwater flows to make effective use of in-line sewer storage capacity [2]. The use of rain gages, level sensors, overflow detectors, and a central computer to control pump stations and selected regulating gates is underway in Detroit [3]. The Municipality of Metropolitan Seattle (METRO) is incorporating the main features of the above projects plus additional water quality monitoring functions [30]. The City and County of San Francisco have embarked on the initial phase of a system control project for which the ultimate goal is complete hands-off computerized automatic control. They are currently collecting data on rainfall and combined sewer flows to aid in the formulation of a system control scheme. More details of the San Francisco system are described in Section XIII under Master Plan Examples. The main difference between the San Francisco and Seattle projects, besides size, is hands-off versus hands-on automatic supervisory control [16].

As an example of a complex "systems approach" to collection system control, various aspects of the Seattle master plan are discussed in detail below.

Table 38. TYPICAL REMOVALS ACHIEVED WITH SCREENING/DISSOLVED AIR FLOTATION

	Without chemicals		With chemicals	
Constituents	Effluent, mg/l	% Removal	Effluent, mg/l	% Removal
SS	81-106	56	42-48	77
VSS	47[a]	53[a]	18-29	70
BOD	29-102	41	12-20	57
COD	123[a]	41[a]	46-83	45
Total N	4.2-16.8	14	4.2-15.9	17
Total P	1.3-8.8	16	0.5-5.6	69

a. Only one set of samples.

grit and most of the nonfloatable material successfully. The system used the split flow method for dissolving air into the flow. Approximately 20 percent of the total flow was pressurized to 2.8 to 3.5 kg/sq cm (40 to 50 psi) in a packless saturation tank, then remixed with the remainder of the flow for one minute in a mixing chamber. Flow then entered the flotation cell for flotation and removal of the floating matter (float) by scrapers. The float was collected in a holding tank for discharge back to the dry-weather interceptor.

Racine, Wisconsin – The Racine prototype facilities are essentially the same design as the one in Milwaukee. It, however, is constructed partly underground out of concrete. There are two plants: one 615 l/sec (14 mgd) and the other 1,925 l/sec (44 mgd) in size. Flow to each plant passes through a 2.5 cm (1-inch) bar screen before being lifted to the fine screens by screw pumps. Each plant is built with multiple flotation tanks to accommodate a high flow variation. A separate air saturation tank and pump serves each flotation tank. Flow into the flotation tanks is controlled by weirs which allow sequential filling of only as many tanks as are necessary to handle the flow.

3. Short-term weather prediction would be obtained by rain gages located throughout the METRO drainage area.

Water quality studies – Since 1963, METRO has been engaged in a comprehensive water quality monitoring program throughout the entire metropolitan drainage area. Upon receipt of the CATAD demonstration grant in 1967, additional specialized water quality monitoring studies were added to the existing program to concentrate on certain areas that contribute to combined sewer overflows.

The objectives of the demonstration grant water quality studies were twofold. First, new water quality studies were begun or old programs modified to show how receiving water quality and other dynamic system parameters have changed during the periods of expansion, interception, regulation, and separation. Second, a base level for various parameters was to be established to be used as a tool for measuring the results of the CATAD demonstration project. The studies have been divided into two general areas related to the collection system itself and the receiving waters adjacent to the municipality. Weather and other pertinent environmental factors are correlated with data from the two main study categories.

Overflow sampling was divided into three categories: physical and chemical sampling, bacteriological sampling, and overflow volume computation.

Examples of a typical sewer sampling station and receiving water sampling and monitoring station are shown on Figure 15 (a, b, c).

System Operation – The CATAD system controls comprise a computer-based central facility for automatic control of remote regulator and pumping stations. The control center is located at the METRO office building with satellite terminals at the West Point and Renton treatment plants. The principal features of the control center include a computer, its associated peripheral equipment, an operators console, map display, and logging and events printers [23].

Remote monitoring and control units have been provided for 36 remote pumping and regulator stations. Twenty-four remote control units have been installed at pumping and regulator stations on the trunk and interceptor sewers leading to the West Point sewage treatment plant and nine remote control units have been installed at pumping stations along the interceptor sewers transporting primarily sanitary

and bled off since oxygen has a higher solubility than nitrogen. Finally, the pressure release valve and the discharge line from the saturation tank should be designed to induce good mixing with the remainder of the flow and promote fine bubble formation [1].

Overflow Rate – The removals achieved by dissolved air flotation are governed by several factors. The most critical design parameter is the surface overflow rate which can be easily translated into the rise rate of the particle and air bubble. To remove an air particle with a given rise rate, the corresponding overflow rate must not be exceeded. In rough terms, it has been reported that overflow rates above 6.1 cu m/hr/sq m (3,600 gpd/sq ft) start to reduce removal efficiencies. Below this value the removals remain relatively constant.

Dissolved Air Requirements – Also important in affecting removals is the amount of air dissolved. An insufficient supply of dissolved air reduces the amount of air available for each solid particle, and thus the difference between the air-particle density and the density of water is not great enough to meet the minimum rise rate. Also, the better the atomization or bubble coverage over the plan area of the tank, the better the chance for collision between the bubbles and the suspended particles. The amount of air supplied to a split flow flotation facility is dependent on the percentage of flow saturated with air and the pressure. In the studies using combined sewer overflows, the optimum value for the percentage of flow pressurized averages around 20. In one study with a full flow system, removals were found to be directly related to the pressure used in the saturation tank, see Figure 44 [17]. The optimum pressure is 3.5 to 4.2 kg/sq cm (50 to 60 psi) which agrees with other studies performed [40, 2].

Flotation Aids – Probably, the most controllable factor affecting particle removals is the amount and type of chemicals added. In all studies, some kinds of chemicals were added to improve removals. In one case, small floating beads were used in lieu of air to provide the flotation [12]. This proved to be unsuccessful. The majority of chemicals added, however, were polyelectrolytes and ferric chloride. Ferric chloride has been reported to be the most successful and has improved SS removals by more than 30 percent. The use of polyelectrolytes alone and in one case bentonite clay with polyelectrolytes has not resulted in important increases in removal efficiencies. Lime and alum have also been used.

Table 30. TYPICAL CATAD REGULATOR STATION MONITORING HOURLY LOG

11/14/72 1000 W POINT SYS HOURLY LOG REGULATOR STATION

	TRKLVL INTLVL	TRKSET INTSET	TIDE	OUTPOS REGPOS	OVRFLO DIVFLO	TRKFLO UPSFLO	STOFLO DNSFLO	UNUSTO EXPHAZ
LOC DENNY RS								
	100.76			0.9	0.0	3.7	0.1	0.14
	0.00	96.56		100.9	3.6			
LUN DENNY RS								
	100.02	109.88	105.89	-0.2	0.0	10.6		
	94.73	96.56		100.5	10.6	32.6	47.0	
KING RS								
	105.23		105.34	-0.1	0.0	3.5	0.1	0.03
	97.70	102.40		99.3	3.4	1.4	4.9	-0.5
CONN RS								
	101.24	106.37	109.38	-0.2	0.0	3.1	0.0	0.31
	97.46	101.35		99.8	3.1	31.6	34.7	
LANDER RS								
	102.27	106.01	106.06	-0.1	0.0	6.3	0.0	0.57
	98.91	102.75		99.4	6.3	28.6	35.1	
2 HANFORD RS								
	100.97	105.23	104.81	0.0	0.0	6.4	0.7	2.15
	98.81	102.75		100.0	5.7	20.8	26.6	
BRANDON RS								
	102.37	105.93	105.59	-0.1	0.0	0.0		
	98.96	100.40		102.9	0.0	14.0	14.0	
MICHIGAN RS								
	101.50	105.69	105.35	-0.4	0.0	0.0		
	100.30	101.65		102.9	0.0	12.0	12.0	
CHELAN RS								
	101.56	107.98	105.61	0.1	0.0	4.4		
	100.53	103.21		100.3	4.4		2.7	
HARBOR RS								
	108.38		106.09	-0.2	0.0	0.9		
	108.08	109.13		99.5	0.9		0.9	
W MICH RS								
	116.46			0.0	0.0	0.7		
	107.41	108.37		99.9	0.7	3.1	3.8	
8TH SOUTH RS								
	100.49		105.76	0.3	0.0	2.8		
	98.12	99.58		100.4	2.8		2.2	
DEXTER RS								
	136.56	144.34			0.0	4.1	-0.1	1.09
	134.28	137.75		36.3	4.2		4.2	-3.6
L CITY RS								
	150.36	157.06			0.0	13.4		
	114.33			100.1	13.4		38.9	
1 HANFORD RS								
	101.61	108.05			0.0			
	95.40			-0.7				

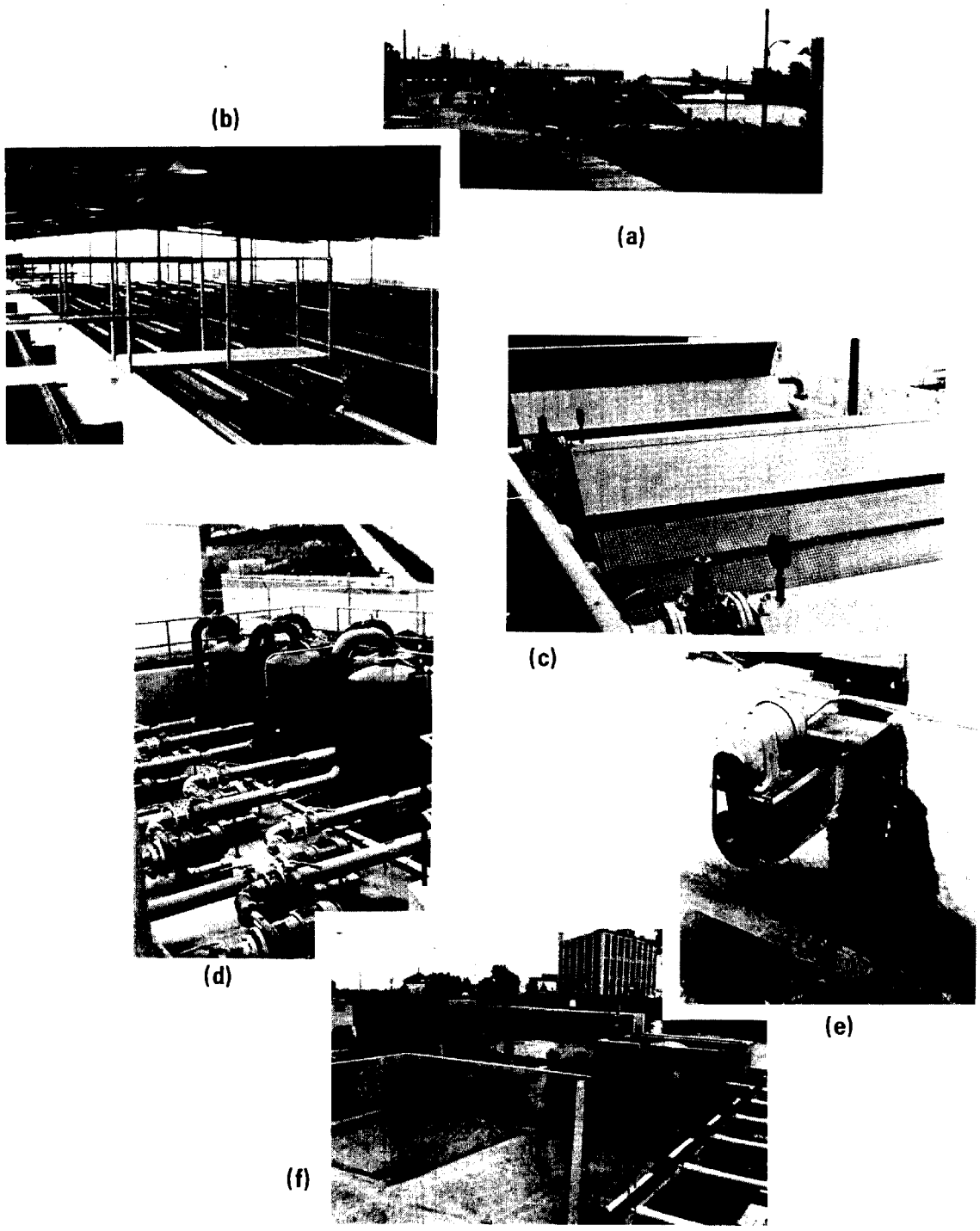

Figure 43. Dissolved air flotation facilities (Racine)

(a) Overview of site during construction (b) Overview of flotation tanks after light roof addition (c) Fine drum screen pretreatment units (d) Air saturation (pressurization) tanks (e) End of float drawoff (helical cross conveyor) (f) Float holding tanks (for temporary storage before feedback to interceptor)

The design of the METRO interceptor system provides a positive means for controlling these bypassed flows. A regulator station (Figure 32) at each major trunk sewer controls both the diversion of combined sewage into the interceptor and the overflow from the trunk (sewage in excess of the capacity of the interceptor). The volume of flow diverted to the interceptor is automatically controlled by modulating the regulator gate position in response to changes in the level of sewage in the interceptor. As the level in the interceptor rises above a preset maximum, the regulator gate closes to reduce the volume of diverted flow and maintain the preset level. Storm flow in excess of the diverted flow is stored in the trunk sewer and the level of the sewage in the trunk commences to rise. When the level rises above a preset maximum, the outfall gate will open automatically to discharge the excess storm flow and modulate to maintain the preset maximum level in the trunk.

Accomplishments – The most demonstrative method of pointing out accomplishments is to show the results of interception of an actual storm. Two days of CATAD printouts were obtained from METRO, one set for the storm flow that occurred on November 25, 1972, and the second set for the dry-weather flow on November 14, 1972. The dry-weather flow data were used to establish an approximate dry-weather flow base for comparison purposes. The particular regulator station analyzed is the Denny-Lake Union (identified as LUN DENNY RS in the CATAD printouts). A sample storm log is shown in Table 33. The data included in this log are the rainfall occurring and the maximum rainfall rate during the hour, the maximum overflow rate and the overflow volume occurring during the hour, and the total overflow volume from the start of the overflow. A 16-hour period from 0700 hours to 2300 hours was used for the comparison. From the data, hydrographs were generated which yielded a dry-weather flow volume of 140,540 cu m (37.13 mil gal.) and a wet-weather flow volume of 204,650 cu m (54.07 mil gal.). The potential overflow volume then is the difference between the two or 64,120 cu m (16.94 mil gal.). The amount of actual overflow from the station allowed by the CATAD system was 11,660 cu m (3.08 mil gal.). Thus the effective storm runoff containment for this particular storm and regulator station was approximately 82 percent.

Several improvements have been observed in Elliott Bay following the August 1970 interception and regulation of 12 major combined sewer overflows which are that reductions in coliform levels range from 63 to 98 percent and that monitoring indicates an improvement of between 2 and 3 mg/l of dissolved oxygen in the bay.

split flow flotation where part of the incoming flow is pressurized and mixed with air before being recombined with the remaining flow and entering the flotation tank. And the last is the recycle system in which a portion of the effluent is pressurized before being returned and mixed with the incoming flow. The last two methods are used for the larger size units since they require only a portion of the total flow to be pressurized. In combined sewer overflow treatment studies the split flow method has been used because the flotation tank only needs to be designed for the actual flow arriving at the plant and need not include any recycled flow. However, subsequent laboratory studies have indicated better removals may be achieved by using the recycle type of dissolved air flotation [39].

Typical facilities consist of saturation tanks to dissolve air into a portion of the flow, a small mixing chamber to recombine the flow that has been pressurized with that which has not, and flotation tanks or cells. In most flotation cells, two sets of flight scrapers, top and bottom, are used. These remove the accumulated float and settled sludge. At two major combined sewer overflow study sites, however, the bottom scrapers were not used. Instead, 50-mesh rotating fine screens ahead of the dissolved air flotation units removed the coarser material in the waste flows, thus eliminating the majority of settleable material. A schematic of the dissolved air flotation facilities at Racine, Wisconsin, is shown on Figure 42. Photographs of a typical dissolved air flotation facility are shown on Figure 43.

Design Criteria

The principal parameters that affect removal efficiencies are (1) overflow rate, (2) amount of air dissolved in the flows, and (3) chemical addition. Chemical addition has been used to improve removals, and ferric chloride has been the chemical most commonly added.

Any one of several methods may be used to size a dissolved air flotation facility. Values for design parameters used in the combined sewer overflow studies are listed in Table 37. The most commonly used design equation is that recommended by the American Petroleum Institute [1].

When designing dissolved air flotation, regardless of whether by formulated equations found in the literature or by the design parameters listed previously in Table 37, certain items should be remembered. First, the saturation tank should be a packless chamber to prevent solids plugging or buildup and second, excess amounts of air should be supplied

Section IX

STORAGE

Storage is, perhaps, the most cost effective method available for reducing pollution resulting from combined sewer overflows and to improve management of urban stormwater runoff. As such, it is the best documented abatement measure in present practice. Storage, with the resulting sedimentation that occurs, can also be thought of as a treatment process.

Storage facilities possess many of the favorable attributes desired in combined sewer overflow treatment: (1) they are basically simple in design and operation; (2) they respond without difficulty to intermittent and random storm behavior; (3) they are relatively unaffected by flow and quality changes; and (4) they are capable of providing flow equalization and, in the case of tunnels, transmission. Frequently they can be operated in concert with regional dry-weather flow treatment plants for benefits during both dry- and wet-weather conditions. Finally, storage facilities are relatively fail-safe and adapt well to stage construction. Drawbacks of such facilities are related primarily to their large size (real estate requirements), cost, and visual impact. Also, access to treatment plants or processes for dewatering, washdown, and solids disposal is required.

Storage facilities presently in operation have been sized on the basis of one or more of several possible criteria. The facilities should: (1) provide a specified detention time for runoff from a storm of a given duration or return frequency; (2) contain a given volume of runoff from the tributary area, such as the first 1.27 cm (1/2 inch) of runoff; (3) contain the runoff from a given volume of rain, such as the runoff from 1.27 cm (1/2 inch) of rain; or (4) contain a specified volume. Because storage facilities are generally designed to also function as sedimentation and/or disinfection tanks, a major advantage is the SS reduction of any overflows from the storage units. Particular

Other basic cost data for the sedimentation facilities have been presented previously in Table 34 in Section IX, Storage. The data are scattered and no acceptable curve can be derived from them. To assist in evaluating the data, four estimates were made using cost curves from the literature [18]. The resulting points form the curve shown on Figure 41. The curve is intended to give only an indication of the relative magnitude of construction costs for sedimentation facilities.

DISSOLVED AIR FLOTATION

Introduction

Dissolved air flotation is a unit operation used to separate solid particles or liquid droplets from a liquid phase. Separation is brought about by introducing fine air bubbles into the liquid phase. As the bubbles attach to the solid particles or liquid droplets, the buoyant force of the combined particle and air bubble is great enough to cause the particle to rise. Once the particles have floated to the surface, they are removed by skimming. The principal reason for using dissolved air flotation is because the relative difference between the specific gravity of the combined particle and air bubble and the effective specific gravity of water is made significantly higher and is more controllable than using plain sedimentation. Thus, according to Stokes' Law, the velocity of the particle and air bubble is greater than the particle itself because of the greater difference in specific gravities. In engineering terms this means higher overflow rates and shorter detention times can be used for dissolved air flotation than for conventional settling.

This process has a definite advantage over gravity sedimentation when used on combined sewer overflows in that particles with densities both higher and lower than the liquid can be removed in one skimming operation. Dissolved air flotation also aids in the removal of oil and grease which are not as readily removed during sedimentation.

There are two basic processes for forming the air bubbles: (1) dissolve air into the waste stream under pressure,then release the pressure to allow the air to come out of solution, and (2) saturate the waste with air at atmospheric pressure,then apply a vacuum over the flotation tank to reduce the pressure allowing the bubbles to form. The first process is used most commonly. There are three methods for implementing the first process. The first method is the full flow method where all the flow is pressurized and mixed with air before entering the flotation tank. The second is

Seattle, Washington – First operational in late 1971, the system presently has 10 fully equipped regulator stations. such as the one shown on Figure 32, with 3 more under design. All stations are monitored and are designed so that they may be operated by a supervisor from a central control console. Fully automated control will be attempted in 1973. The estimated maximum safe storage in the trunklines and interceptors is 121.1 Ml (32 mil gal.), or roughly equivalent to 0.13 cm (0.05 inches) of direct runoff from the combined sewer and partially separated sewer areas. Interceptor capacity is generally 3 times the estimated year 2000 dry-weather flow. Under supervisory operation, overflows have been reduced in volume by approximately 52 percent.

Minneapolis-St. Paul, Minnesota – This system, operational since April 1969, is quite similar to that in Seattle, except that inflatable Fabridams are used in place of the motor-operated outfall gates, as also shown on Figure 32. Fifteen Fabridams, operated by low pressure air, are located in the major trunks, which are 1.52 to 3.66 meters (5 to 12 feet) in diameter, immediately downstream of the regulator gates. Normally, they are kept in a fully inflated condition forming a dam to approximately mid-height of the conduits. When storm flows are sufficiently large so as to threaten to surcharge the trunk sewers, as indicated by the flow depth monitoring, the Fabridams may be deflated remotely from the control center. On the trunks where they are installed, the total overflow volume reduction has been estimated to range from 35 to 70 percent, depending on the nature of the storm event [7]. Based upon a comparison of pre- and post-project conditions, the number of overflows was reduced 58 percent (from 281 to 117) and the total overflow duration was reduced 88 percent (from 1,183 hours to 147 hours) from April 1969 to May 1970. A major accomplishment of the plan has been the almost total capture of the contaminated spring thaw runoff.

Detroit, Michigan – The Detroit Metropolitan Water Service (DMWS) has installed the nucleus of a sewer monitoring and remote control system for controlling combined sewer overflows from many small storms to the Detroit and Rouge rivers [1]. This system includes telemeter-connected rain gages, sewer level sensors, overflow detectors, a central computer, a central data logger, and a central operating console for pumping stations and selected regulating gates. The cost of the system was slightly over $2.7 million. This system has enabled DMWS to apply such pollution control techniques as storm flow anticipation, first flush interception, selective retention, and selective overflowing.

each tank. Settled solids are resuspended by using submerged eductors along the walls of the tanks. Each eductor is directed to the center channel and is activated after the tanks have been partially drained.

Saginaw, Michigan – The Weiss Street facility, a storage/clarifier combination with a 13,620 cu m (3.6 mil gal.) storage capacity, is currently under construction. The first of three tanks is designed to capture the grit and most of the heavier suspended matter. It operates in series with the remaining two tanks which operate in parallel. The tank bottoms are sloped and troughed to aid in the removal of the settled solids. The tanks are washed down under manual control after each storm using spray nozzles mounted along walkways next to the tanks. The first tank also has a clamshell bucket to remove grit. The last two tanks have horizontal screens placed below the water level just in front of the overflow weirs. A baffle is used to ensure water flows upward through the screens before overflowing the weir.

Operation

It is interesting to note that in all the storage/sedimentation projects, settled sludge is stored until after the storm event. At this time, the contents in the tanks, including the solids, are slowly drained back to the interceptor. The notable exception to this procedure is at Chippewa Falls, Wisconsin, where solids are removed from the basin after dewatering using a front end loader or an ordinary street sweeper for disposal at a sanitary landfill.

Several different methods for resuspending or removing the settled solids are used at the various other storage/sedimentation facilities. At the Humboldt Avenue facility in Milwaukee, Wisconsin, mechanical mixers are used to resuspend the settled solids. Traveling bridges with hydraulic nozzles are used at the Spring Creek plant in New York City. At the Cottage Farm facility, a fixed water spray in conjunction with a sloped and troughed floor is used to flush the solids out of the basins.

The use of tube settlers and separators has been limited mainly to water treatment facilities and some secondary clarifiers at municipal sewage treatment plants. Their use in the storm overflow facilities is found presently only at the Bachman Stormwater Plant in Dallas. To date, the operating data for this plant are insufficient for reaching any conclusions regarding the effectiveness of tube settlers for storm overflows [5, 4].

The operator, upon receiving advance information on storms from a remote rain gage, increases the treatment plant pumping rate. This lowers the surcharged interceptor gradient and allows for greater interceptor storage capacity and conveyance. This practice has enabled DMWS to contain and treat many intense spot storms entirely, in addition to many scattered citywide rains.

Off-Line

Typical off-line storage devices can range from lagoons [18], to huge primary settling tank-like structures [10, 2], to underground silos [8], to underwater bags [4], to void space storage, to deep tunnels [5], and mine labyrinths. In almost all cases, feedback of the retained flows to the sanitary system for ultimate disposal is proposed or practiced. The underground and offshore storage has been proposed to meet the severe land area and premium cost constraints.

Chippewa Falls, Wisconsin – A 36.45-ha (90-acre) combined sewer area of this Wisconsin community has been served by a 10.6-Ml (2.8-mil gal.) open storage lagoon since 1969 [18]. The storage volume is equivalent to 2.92 cm (1.15 inches) of runoff from the tributary area. A plan of the retention basin is shown on Figure 33. In the two-year period 1969-1970, the lagoon was 93.7 percent effective in capturing overflow volumes. During this period, the combined sewer overflows from 59 of 62 storms were totally contained by the basin. Flow storage in the basin up to 12 hours caused no adverse odor problems. The basin was paved with 5.08 cm (2 inches) of asphalt, and the most effective cleaning of solids was through the use of conventional street sweepers. The basin is dewatered to an existing activated sludge plant after storms with no adverse effect on the biological treatment process. Secondary clarifier capacity, however, had to be doubled to avoid excessive loss of solids during sustained high flows.

Akron, Ohio – An underground 2.7-Ml (0.7-mil gal.) capacity storage facility has been constructed in Akron, Ohio (see Figure 34), utilizing the concept of void space storage [17]. The basin is trapezoidal in cross section (3:1 side slopes) with top dimensions of 61 meters (200 feet) by 61 meters (200 feet) and a usable depth of 3.4 meters (11 feet). It serves a 76-ha (188.5 acre) combined sewered area. The rock fill material completely filling the basin in which the combined sewage is to be temporarily stored is washed gravel, graded from 6.3 to 8.9 cm (2-1/2 to 3-1/2 inches) in diameter. The effective void space is approximately 33 percent of the total volume. The fill is completely enclosed

Although sedimentation may be the preferred method for removing SS from combined sewer overflows, it is not always the most economical. The primary limitations are the large size of sedimentation facilities, the long detention times, and the low removal efficiency for colloidal matter [7].

Two solutions to these limitations are: (1) combining the sedimentation process with storage facilities, which is usually done simply by the nature of the storage configuration, and (2) using tube settlers or separators to reduce the detention time and improve SS removals. Several storage/sedimentation facilities have been constructed and operated with apparent success (see Table 35). Relatively little operational information is available, however. Further data will be available as some of the ongoing projects are completed.

Table 35. SUMMARY DATA ON SEDIMENTATION BASINS COMBINED WITH STORAGE FACILITIES

Location of facility	Size, mil gal.	Type of storage facility	Removal efficiency SS	Removal efficiency BOD_5, %	Type of solids removal equipment[a]
		a. In operation			
Cottage Farm Detention and Chlorination Facility, Cambridge, Mass.	1.3	Covered concrete tanks	45	Erratic	Manual washdown
Chippewa Falls, Wis.	2.8	Asphalt paved storage basin	18-70	22-74	Solids removal by street cleaners
Columbus, Ohio					
Whittier Street	4.0	Open concrete tanks	15-45	15-35	Mechanical washdown
Alum Creek	0.9	Covered concrete tank	NA[b]	NA	Mechanical washdown
Humboldt Ave., Milwaukee, Wis.	4.0	Covered concrete tanks	NA	NA	Resuspension of solids by mixers
Spring Creek Jamaica Bay, New York, N.Y.	10.0	Covered concrete tanks	NA	NA	Traveling bridge hydraulic mixers
		b. In planning or construction phase			
Mount Clemens, Mich.	5.8	Concrete tanks	--	--	Resuspension of solids and mechanical washdown by eductors
Lancaster, Pa.	1.2	Concrete silo	--	--	Air agitation and pumping
Weiss Street, Saginaw, Mich.	3.6	Concrete tanks	--	--	Mechanical and manual washdown

a. All facilities store solids during storm event and clean sedimentation basin when flows to the interceptor can handle the solid water and solids.

b. NA = not available.

Note: mil gal. x 3,785.0 = cu m

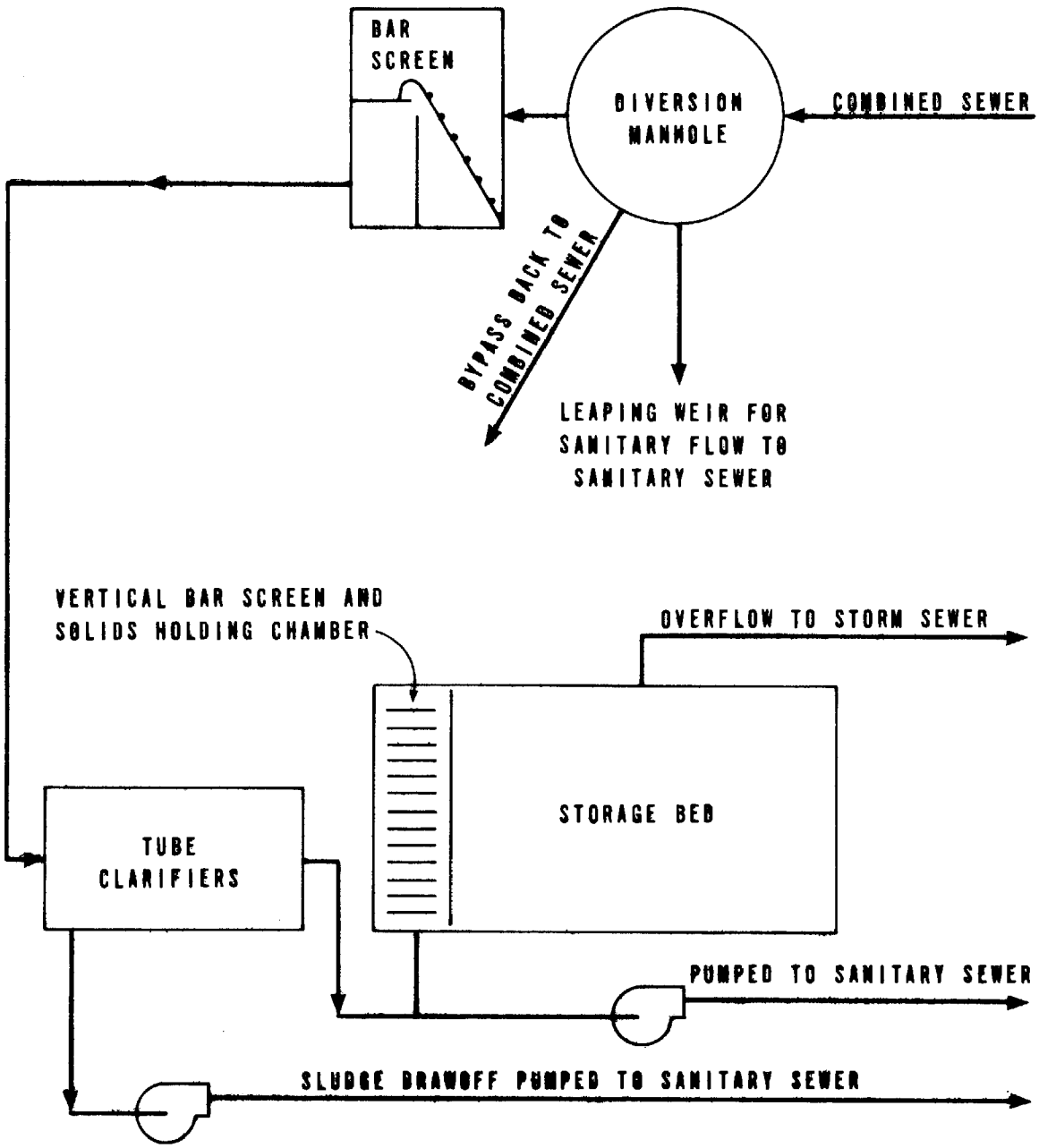

Figure 34. Schematic of detention facilities, Akron, Ohio [17]

Table 34. SUMMARY OF STORAGE COSTS FOR VARIOUS CITIES[a]

Location	Storage, mil gal.	Capital cost, $	Cost per acre, $/acre	Storage cost, $/gal.	Annual operation and maintenance cost, $
Seattle, Wash. [14]					
Control and monitoring system	--	3,500,000	--	--	--
Automated regulator stations	--	3,900,000			
	32.0	7,400,000	--	0.23	250,000
Minneapolis-St. Paul, Minn. [7]	--	3,000,000	5,550	--	--
Chippewa Falls, Wis. [18]					
Storage	2.8	744,000	8,260	0.26	2,500
Treatment	--	186,000	2,070	--	7,200
	2.8	950,000	10,330	0.26	9,700
Akron, Ohio [17]	0.7	441,000	2,340	0.62	23,300
Oak Lawn, Ill. [16]					
Melvina Ditch Detention Reservoir	53.7	1,388,000	540	0.03	--
Jamaica Bay, New York City, N.Y. [10,12]					
Basin	10.0	21,200,000	6,530	2.12	--
Sewer	13.0	--	--	--	--
	23.0	21,200,000	6,530	0.92	--
Humboldt Avenue, Milwaukee, Wis. [3, 13]	4.0	2,010,000	3,560	0.50	50,000
Boston, Mass. [6]					
Cottage Farm Stormwater Treatment Station	1.3	6,200,000	--	4.74[b]	65,000
Chicago, Ill. [9]					
Reservoirs	2,736.0	568,000,000	2,370	0.21	--
Collection, tunnel, and pumping[c]	2,834.0	755,000	3,150	0.27	--
Reservoirs and tunnels	5,570.0	1,323,000,000	5,500	0.24	--
Treatment	--	1,550,000,000	6,460	--	--
	5,570.0	2,873,000,000	11,960	0.24	8,700,000
Sandusky, Ohio [19]	0.2	535,000	36,000	2.67	6,380
Washington, D.C. [4]	0.2	883,000	29,430	4.41	3,340

a. ENR = 2000.

b. Includes pumping station, chlorination facilities, and outfall.

c. Includes 193.1 km (120 miles) of tunnels.

Note: $/acre x 2.47 = $/hectare; $/gal. x 0.264 = $/l; mil gal. x 3.785 = Ml

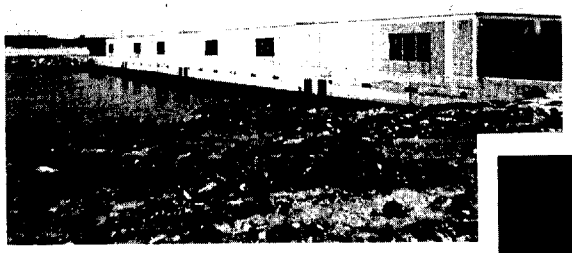

(a)

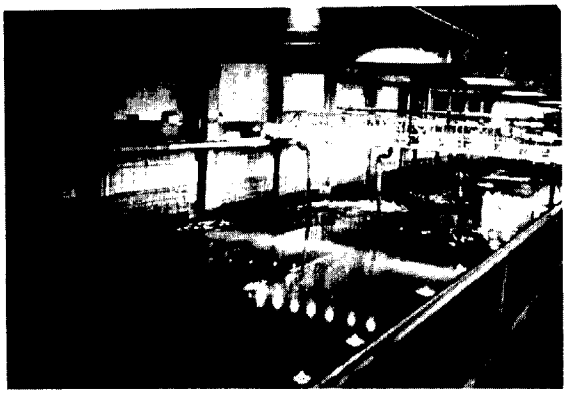

(b)

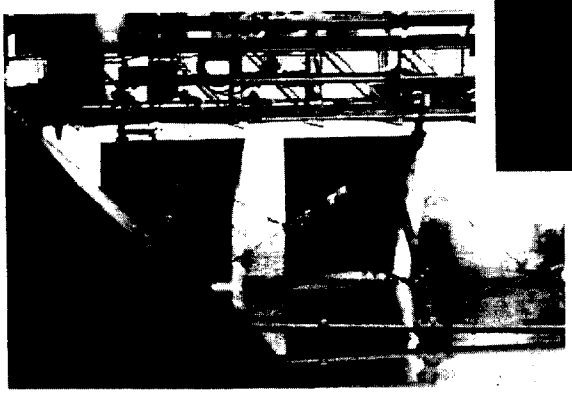

(c)

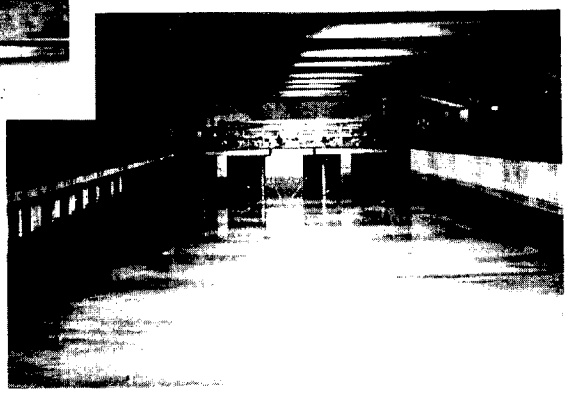

(d)

Figure 35. Jamaica Bay (Spring Creek auxiliary water pollution control plant) retention basin

(a) Exterior view of facility at discharge to receiving water (b) Traveling bridge collector with drop pipe assemblies (c) Closeup of bridge showing typical drop pipe and header for directing high pressure sprays on floor (d) One of six 50-ft wide bays, looking at inlet ports

underwater storage of combined sewer overflows from a 12.15-ha (30-acre) drainage area [4]. The plant consisted of a treatment facility (grit removal, bar rack, and comminution), underwater storage tanks, and the associated instrumentation, pumping, and control systems. Two 0.38-Ml (0.1-mil gal.) tanks were anchored underwater in the Anacostia River. The tanks were standard pillow tanks made of nylon-reinforced synthetic rubber.

Portions of the overflow from a combined sewer overflow line were diverted to the pilot plant. The flow entered the grit chamber of the pilot plant, then passed through a bar screen followed by a comminution before entering the underwater storage tanks. Material removed in the grit chambers was returned to the interceptor. After the storm subsided and during nonpeak hours, liquid was pumped from the tanks into the interceptor for transport to the dry-weather treatment plant. To prevent settlement of solids in the storage tanks, compressed air was forced into the tanks to agitate any settled sludge and to enable pumping out of all the contents of the storage tanks to the interceptor.

Of the numerous operational problems encountered during this project, the major one was clogging of the effluent port by the flexible tank top membrane during dewatering.

Sandusky, Ohio – A 0.76-Ml (0.2-mil gal.) capacity underwater storage facility was constructed and tested in Sandusky, Ohio. The facility consisted of three basic system components, the underwater storage tank with its associated piping and controls, a connecting structure to the existing outfall, and a control building to house instrumentation and pump systems [19]. Two 0.38-Ml (0.1-mil gal.) collapsible tanks serving a 6.0-ha (14.9-acre) area were anchored underwater in Lake Erie. The tanks consist of a steel pipe frame in the form of a modified octagon with a nylon-reinforced synthetic rubber flexible membrane top and bottom. A concrete pad was poured to fit the bottom contours of both storage tanks. The tank top conforms to the bottom contours when empty and the top rises upon filling.

Combined sewer overflow passes through a bar screen in a connecting chamber to remove all trash from the overflow before passing to the influent pipes to the tanks. A diversion weir allows control of the filling of one tank or the other. At high flow rates, both tanks fill simultaneously. After tank capacity is reached, the flow backs up in the connection chamber and passes out a safety overflow. Combined sewer overflow reaching the underwater storage tanks passes through a sedimentation control chamber over

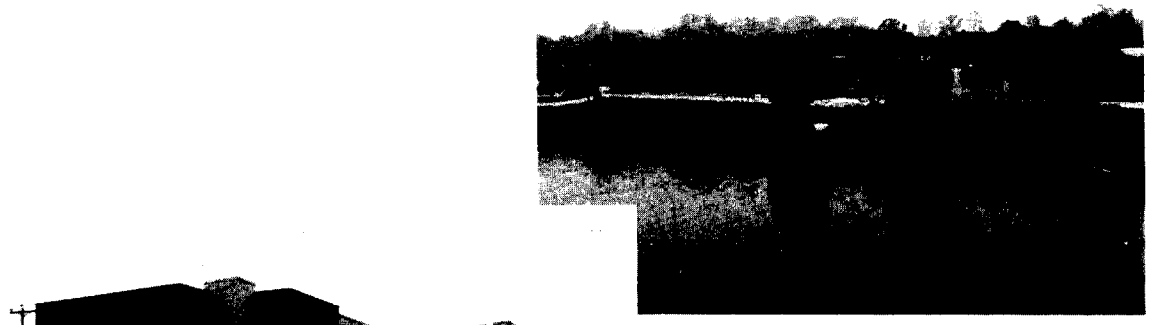

(a)

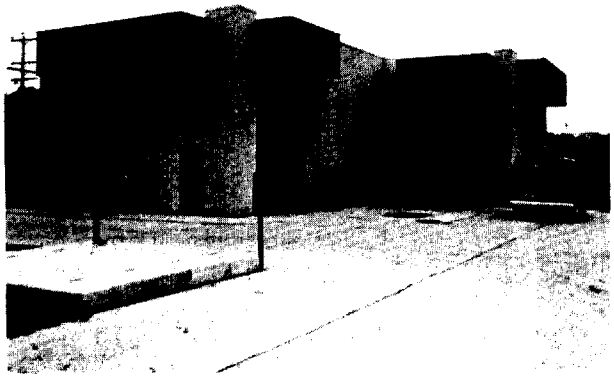

(b)

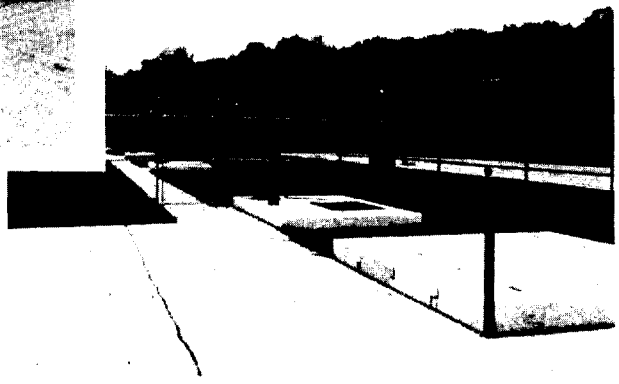

(c)

(d)

Figure 37. Humboldt Ave. (Milwaukee) retention basin

(a) Exterior view of the predominantly buried facility on the Milwaukee River
(b) Operations building housing chlorination, screening, and pumping equipment
(c) Looking over tanks from operations building (d) Walking above tanks
(note tank area did not require fencing

Chicago, Illinois – Chicago has pioneered in the development of abandoned mine storage, deep vertical drop shafts [11], and deep tunnels in hard rock [5] for the interception, conveyance, and temporary storage of combined sewer overflows. Three construction contracts partially funded by the EPA are presently in progress, representing a total investment in excess of $50 million (ENR 2000) providing over 17.7 km (11 miles) of tunnel and appurtenant drop shafts and pumping. Typical examples are shown on Figure 40. Under the recently adopted master plan for the 97,200-ha (240,000-acre) Greater Chicago service area, the following are to be accomplished: (1) treatment of all wet-weather flows at a dry-weather flow facility sized for 1.5 average dry-weather flow maximum rate; (2) interception of all existing wet-weather outfalls by a deep conveyance tunnel system; and (3) storage of all intercepted flows above treatment capacity at one large and two auxiliary reservoirs until they are absorbed by the dry-weather flow treatment facilities operating at nearly a constant maximum rate [9]. The cost for this plan has been estimated to be $2,873 million as opposed to $5,521 million for complete sewer separation, and separation would not meet the proposed water quality or flood control objectives.

The major reservoir would be a quarry 100.7 meters deep by 152.5 to 366.0 meters wide by 4.02 km long (330 feet by 500 to 1,200 feet by 2.5 miles). The combined sewer overflows retained in the reservoir would be aerated continuously, and accumulated solids would be removed periodically by dredging. Most storms would be dewatered in 2 to 10 days; the largest, in 50 days. The reservoir would be dewatered to a dry-weather treatment plant at a rate of 19.8 cu m/sec (450 mgd) or 0.5 times average dry-weather flow. The total storage provided would be equivalent to 7.98 cm (3.14 inches) of runoff, 70,309,500 cu m (57,000 acre-ft), or 9 percent of the annual average rainfall. Based upon this plan, the frequency of overflows to the Chicago River was estimated to be 4 times in 21 years.

The tunnels, a total of 193 km (120 miles) ranging from 3.05 to 12.81 meters (10 to 42 feet) in diameter, would be constructed in dolomite rock 45.8 to 88.5 meters (150 to 290 feet) below the surface. Drop shafts would be placed at approximately 0.80-km (1/2-mile) intervals, and a forced ventilation system providing one air change per hour during dewatering would be operated to control odors and gases. The tunnels would be constructed on self-cleansing gradients with additional provisions for flushing by introducing river water into the tunnel.

Washington, D. C. – At Washington, D. C., a pilot plant was built and tested to assess the feasibility of treatment and

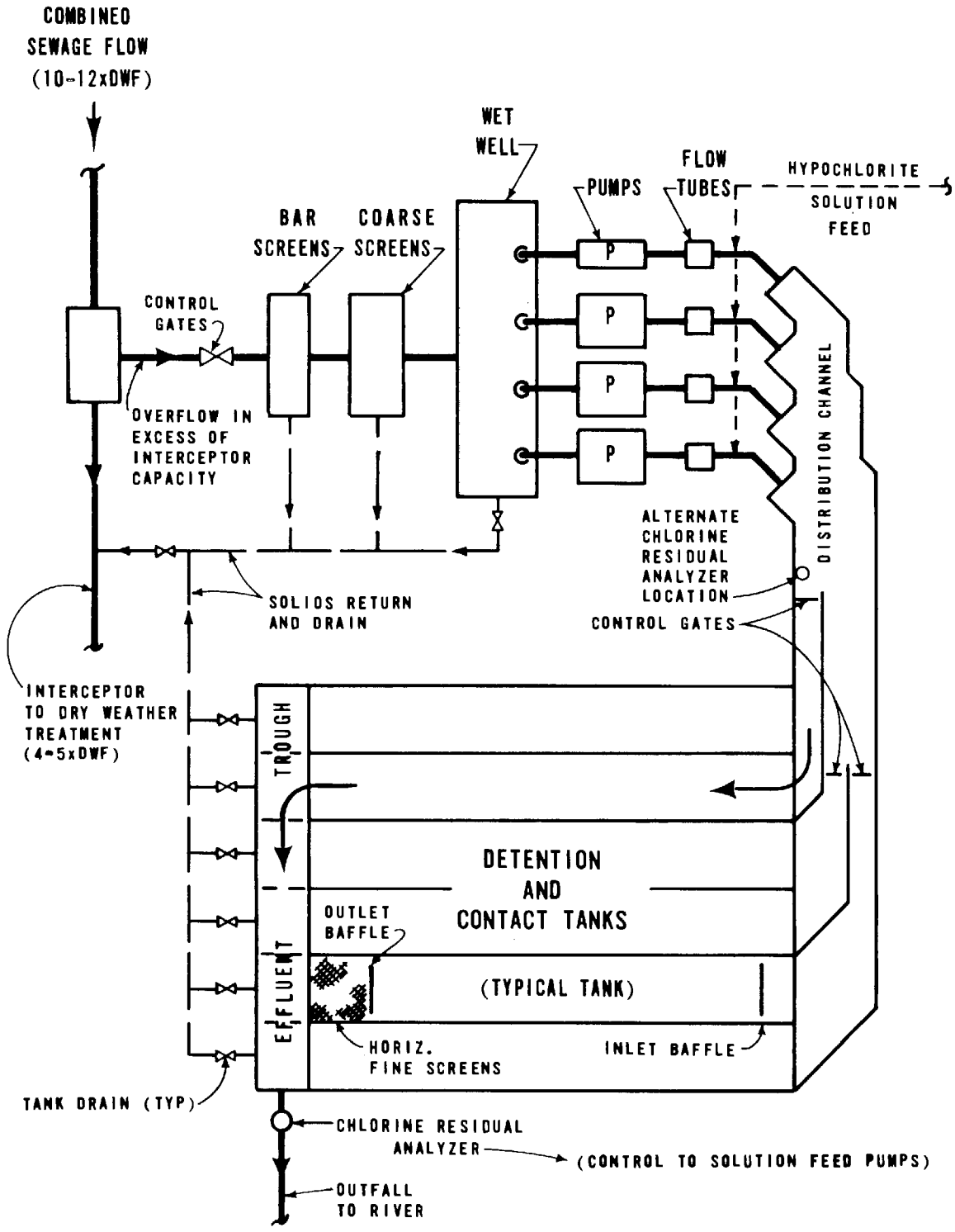

Figure 38. Schematic of Cottage Farm detention and chlorination facility, Boston, Massachusetts

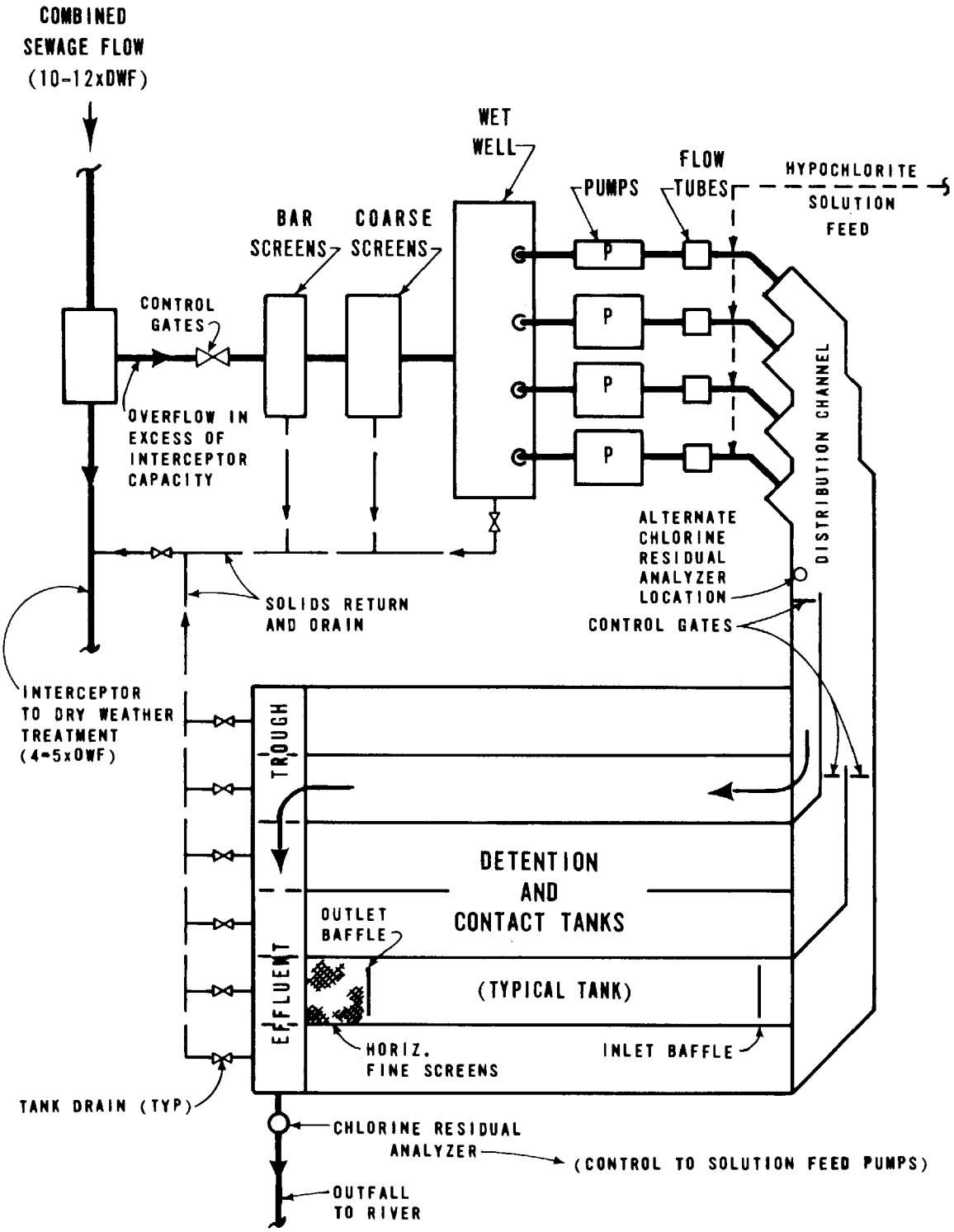

Figure 38. Schematic of Cottage Farm detention and chlorination facility, Boston, Massachusetts

Chicago, Illinois – Chicago has pioneered in the development of abandoned mine storage, deep vertical drop shafts [11], and deep tunnels in hard rock [5] for the interception, conveyance, and temporary storage of combined sewer overflows. Three construction contracts partially funded by the EPA are presently in progress, representing a total investment in excess of $50 million (ENR 2000) providing over 17.7 km (11 miles) of tunnel and appurtenant drop shafts and pumping. Typical examples are shown on Figure 40. Under the recently adopted master plan for the 97,200-ha (240,000-acre) Greater Chicago service area, the following are to be accomplished: (1) treatment of all wet-weather flows at a dry-weather flow facility sized for 1.5 average dry-weather flow maximum rate; (2) interception of all existing wet-weather outfalls by a deep conveyance tunnel system; and (3) storage of all intercepted flows above treatment capacity at one large and two auxiliary reservoirs until they are absorbed by the dry-weather flow treatment facilities operating at nearly a constant maximum rate [9]. The cost for this plan has been estimated to be $2,873 million as opposed to $5,521 million for complete sewer separation, and separation would not meet the proposed water quality or flood control objectives.

The major reservoir would be a quarry 100.7 meters deep by 152.5 to 366.0 meters wide by 4.02 km long (330 feet by 500 to 1,200 feet by 2.5 miles). The combined sewer overflows retained in the reservoir would be aerated continuously, and accumulated solids would be removed periodically by dredging. Most storms would be dewatered in 2 to 10 days; the largest, in 50 days. The reservoir would be dewatered to a dry-weather treatment plant at a rate of 19.8 cu m/sec (450 mgd) or 0.5 times average dry-weather flow. The total storage provided would be equivalent to 7.98 cm (3.14 inches) of runoff, 70,309,500 cu m (57,000 acre-ft), or 9 percent of the annual average rainfall. Based upon this plan, the frequency of overflows to the Chicago River was estimated to be 4 times in 21 years.

The tunnels, a total of 193 km (120 miles) ranging from 3.05 to 12.81 meters (10 to 42 feet) in diameter, would be constructed in dolomite rock 45.8 to 88.5 meters (150 to 290 feet) below the surface. Drop shafts would be placed at approximately 0.80-km (1/2-mile) intervals, and a forced ventilation system providing one air change per hour during dewatering would be operated to control odors and gases. The tunnels would be constructed on self-cleansing gradients with additional provisions for flushing by introducing river water into the tunnel.

Washington, D. C. – At Washington, D. C., a pilot plant was built and tested to assess the feasibility of treatment and

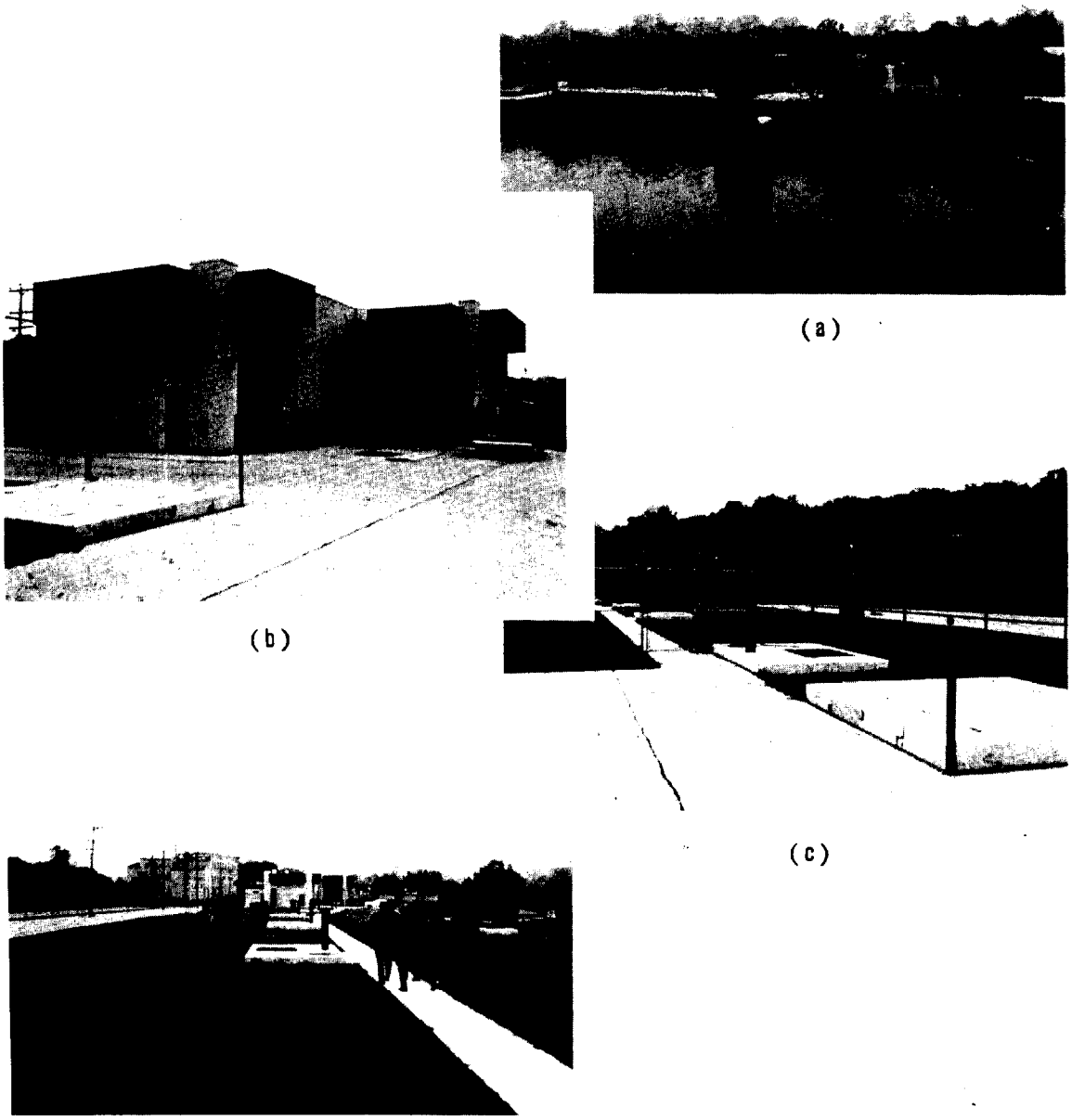

Figure 37. Humboldt Ave. (Milwaukee) retention basin

(a) Exterior view of the predominantly buried facility on the Milwaukee River
(b) Operations building housing chlorination, screening, and pumping equipment
(c) Looking over tanks from operations building (d) Walking above tanks
(note tank area did not require fencing

underwater storage of combined sewer overflows from a 12.15-ha (30-acre) drainage area [4]. The plant consisted of a treatment facility (grit removal, bar rack, and comminution), underwater storage tanks, and the associated instrumentation, pumping, and control systems. Two 0.38-Ml (0.1-mil gal.) tanks were anchored underwater in the Anacostia River. The tanks were standard pillow tanks made of nylon-reinforced synthetic rubber.

Portions of the overflow from a combined sewer overflow line were diverted to the pilot plant. The flow entered the grit chamber of the pilot plant, then passed through a bar screen followed by a comminution before entering the underwater storage tanks. Material removed in the grit chambers was returned to the interceptor. After the storm subsided and during nonpeak hours, liquid was pumped from the tanks into the interceptor for transport to the dry-weather treatment plant. To prevent settlement of solids in the storage tanks, compressed air was forced into the tanks to agitate any settled sludge and to enable pumping out of all the contents of the storage tanks to the interceptor.

Of the numerous operational problems encountered during this project, the major one was clogging of the effluent port by the flexible tank top membrane during dewatering.

Sandusky, Ohio — A 0.76-Ml (0.2-mil gal.) capacity underwater storage facility was constructed and tested in Sandusky, Ohio. The facility consisted of three basic system components, the underwater storage tank with its associated piping and controls, a connecting structure to the existing outfall, and a control building to house instrumentation and pump systems [19]. Two 0.38-Ml (0.1-mil gal.) collapsible tanks serving a 6.0-ha (14.9-acre) area were anchored underwater in Lake Erie. The tanks consist of a steel pipe frame in the form of a modified octagon with a nylon-reinforced synthetic rubber flexible membrane top and bottom. A concrete pad was poured to fit the bottom contours of both storage tanks. The tank top conforms to the bottom contours when empty and the top rises upon filling.

Combined sewer overflow passes through a bar screen in a connecting chamber to remove all trash from the overflow before passing to the influent pipes to the tanks. A diversion weir allows control of the filling of one tank or the other. At high flow rates, both tanks fill simultaneously. After tank capacity is reached, the flow backs up in the connection chamber and passes out a safety overflow. Combined sewer overflow reaching the underwater storage tanks passes through a sedimentation control chamber over

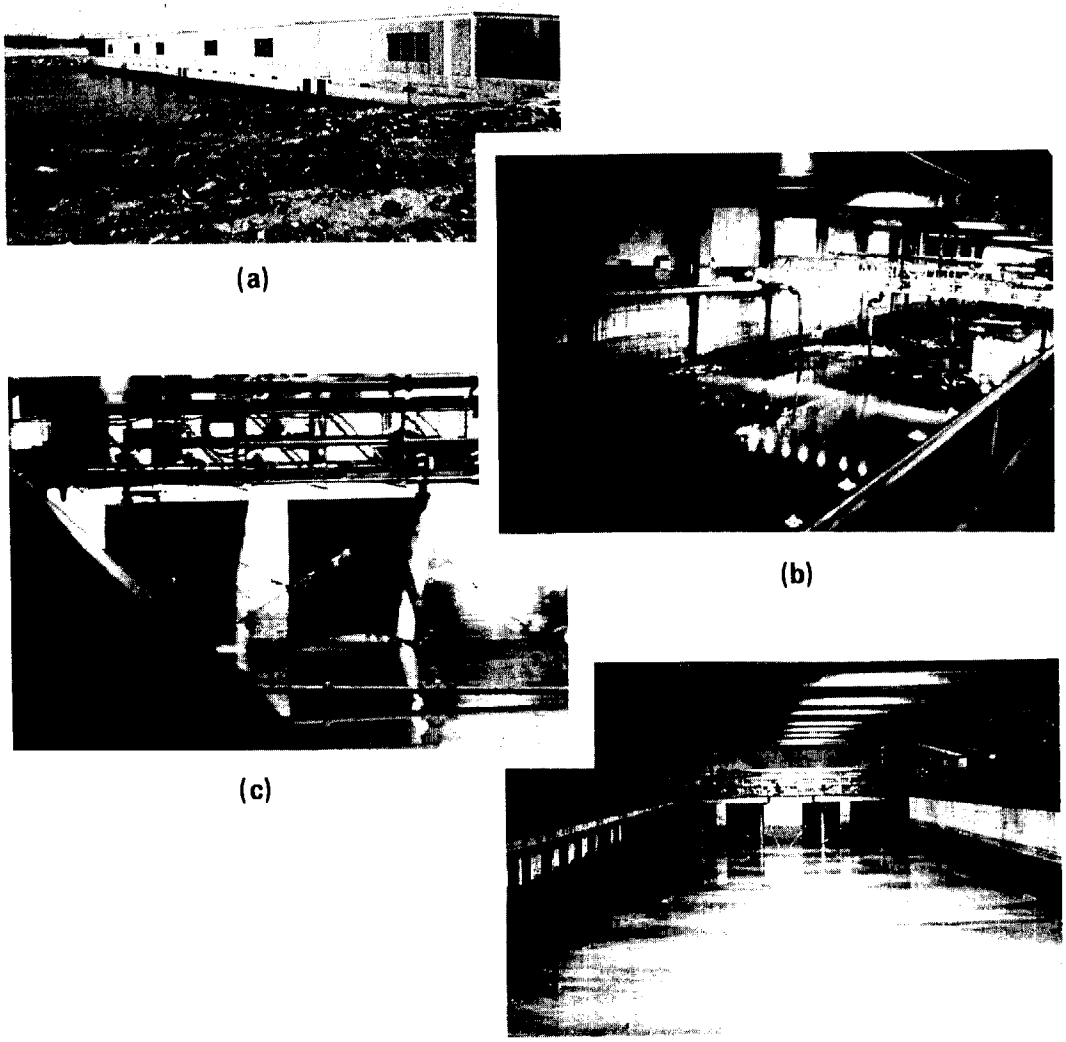

Figure 35. Jamaica Bay (Spring Creek auxiliary water pollution control plant) retention basin

(a) Exterior view of facility at discharge to receiving water (b) Traveling bridge collector with drop pipe assemblies (c) Closeup of bridge showing typical drop pipe and header for directing high pressure sprays on floor (d) One of six 50-ft wide bays, looking at inlet ports

Table 34. SUMMARY OF STORAGE COSTS FOR VARIOUS CITIES[a]

Location	Storage, mil gal.	Capital cost, $	Cost per acre, $/acre	Storage cost, $/gal.	Annual operation and maintenance cost, $
Seattle, Wash. [14]					
Control and monitoring system	--	3,500,000	--	--	--
Automated regulator stations	--	3,900,000			
	32.0	7,400,000	--	0.23	250,000
Minneapolis-St. Paul, Minn. [7]	--	3,000,000	5,550	--	--
Chippewa Falls, Wis. [18]					
Storage	2.8	744,000	8,260	0.26	2,500
Treatment	--	186,000	2,070	--	7,200
	2.8	950,000	10,330	0.26	9,700
Akron, Ohio [17]	0.7	441,000	2,340	0.62	23,300
Oak Lawn, Ill. [16]					
Melvina Ditch Detention Reservoir	53.7	1,388,000	540	0.03	--
Jamaica Bay, New York City, N.Y. [10,12]					
Basin	10.0	21,200,000	6,530	2.12	--
Sewer	13.0	--	--	--	--
	23.0	21,200,000	6,530	0.92	--
Humboldt Avenue, Milwaukee, Wis. [3, 13]	4.0	2,010,000	3,560	0.50	50,000
Boston, Mass. [6]					
Cottage Farm Stormwater Treatment Station	1.3	6,200,000	--	4.74[b]	65,000
Chicago, Ill. [9]					
Reservoirs	2,736.0	568,000,000	2,370	0.21	--
Collection, tunnel, and pumping[c]	2,834.0	755,000	3,150	0.27	--
Reservoirs and tunnels	5,570.0	1,323,000,000	5,500	0.24	--
Treatment	--	1,550,000,000	6,460	--	--
	5,570.0	2,873,000,000	11,960	0.24	8,700,000
Sandusky, Ohio [19]	0.2	535,000	36,000	2.67	6,380
Washington, D.C. [4]	0.2	883,000	29,430	4.41	3,340

a. ENR = 2000.

b. Includes pumping station, chlorination facilities, and outfall.

c. Includes 193.1 km (120 miles) of tunnels.

Note: $/acre x 2.47 = $/hectare; $/gal. x 0.264 = $/l; mil gal. x 3.785 = Ml

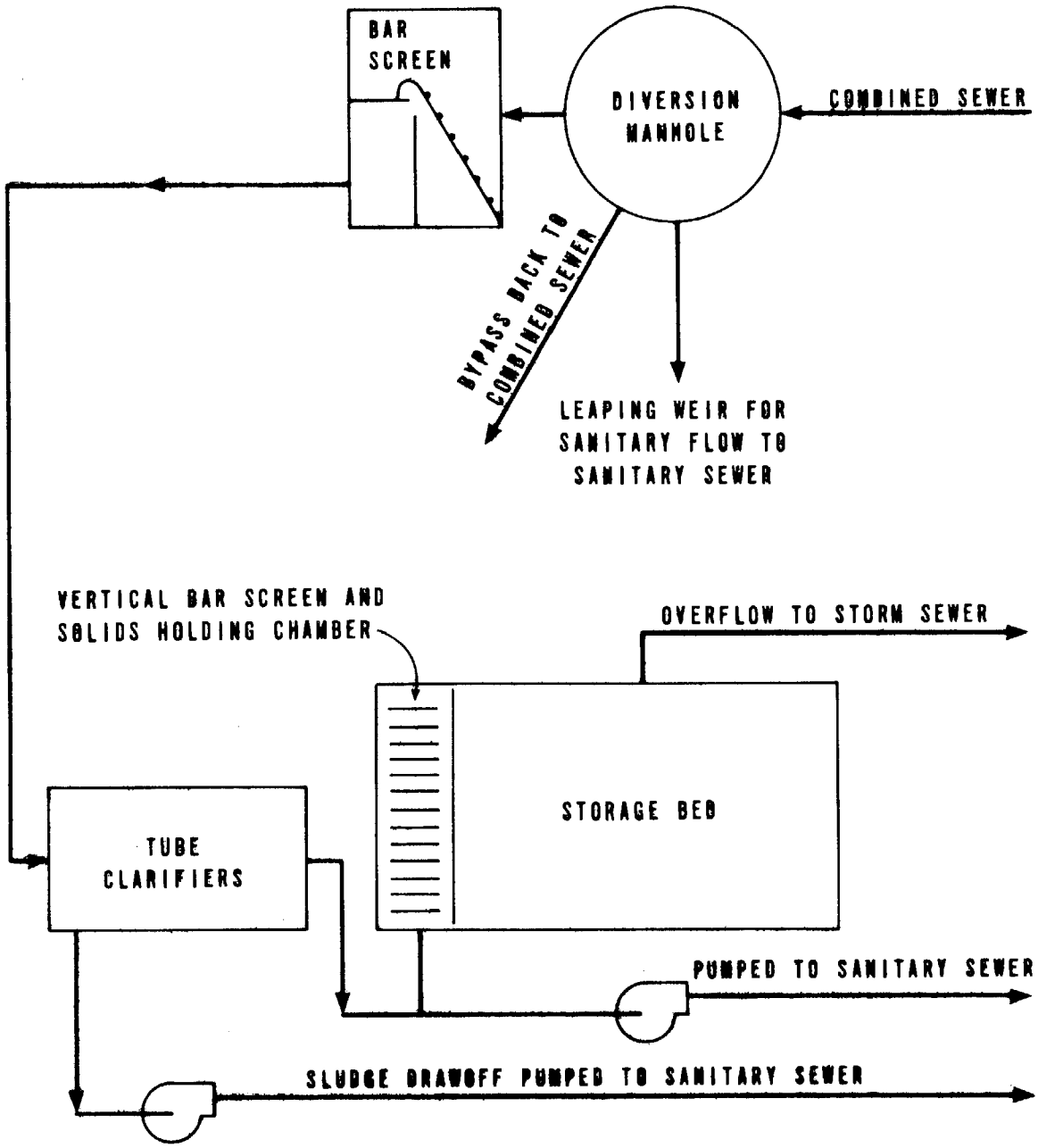

Figure 34. Schematic of detention facilities, Akron, Ohio [17]

Although sedimentation may be the preferred method for removing SS from combined sewer overflows, it is not always the most economical. The primary limitations are the large size of sedimentation facilities, the long detention times, and the low removal efficiency for colloidal matter [7].

Two solutions to these limitations are: (1) combining the sedimentation process with storage facilities, which is usually done simply by the nature of the storage configuration, and (2) using tube settlers or separators to reduce the detention time and improve SS removals. Several storage/sedimentation facilities have been constructed and operated with apparent success (see Table 35). Relatively little operational information is available, however. Further data will be available as some of the ongoing projects are completed.

Table 35. SUMMARY DATA ON SEDIMENTATION BASINS COMBINED WITH STORAGE FACILITIES

Location of facility	Size, mil gal.	Type of storage facility	Removal efficiency		Type of solids removal equipment[a]
			SS	BOD_5, %	
		a. In operation			
Cottage Farm Detention and Chlorination Facility, Cambridge, Mass.	1.3	Covered concrete tanks	45	Erratic	Manual washdown
Chippewa Falls, Wis.	2.8	Asphalt paved storage basin	18-70	22-74	Solids removal by street cleaners
Columbus, Ohio					
Whittier Street	4.0	Open concrete tanks	15-45	15-35	Mechanical washdown
Alum Creek	0.9	Covered concrete tank	NA[b]	NA	Mechanical washdown
Humboldt Ave., Milwaukee, Wis.	4.0	Covered concrete tanks	NA	NA	Resuspension of solids by mixers
Spring Creek Jamaica Bay, New York, N.Y.	10.0	Covered concrete tanks	NA	NA	Traveling bridge hydraulic mixers
		b. In planning or construction phase			
Mount Clemens, Mich.	5.8	Concrete tanks	--	--	Resuspension of solids and mechanical washdown by eductors
Lancaster, Pa.	1.2	Concrete silo	--	--	Air agitation and pumping
Weiss Street, Saginaw, Mich.	3.6	Concrete tanks	--	--	Mechanical and manual washdown

a. All facilities store solids during storm event and clean sedimentation basin when flows to the interceptor can handle the solid water and solids.

b. NA = not available.

Note: mil gal. x 3,785.0 = cu m

The operator, upon receiving advance information on storms from a remote rain gage, increases the treatment plant pumping rate. This lowers the surcharged interceptor gradient and allows for greater interceptor storage capacity and conveyance. This practice has enabled DMWS to contain and treat many intense spot storms entirely, in addition to many scattered citywide rains.

Off-Line

Typical off-line storage devices can range from lagoons [18], to huge primary settling tank-like structures [10, 2], to underground silos [8], to underwater bags [4], to void space storage, to deep tunnels [5], and mine labyrinths. In almost all cases, feedback of the retained flows to the sanitary system for ultimate disposal is proposed or practiced. The underground and offshore storage has been proposed to meet the severe land area and premium cost constraints.

Chippewa Falls, Wisconsin – A 36.45-ha (90-acre) combined sewer area of this Wisconsin community has been served by a 10.6-Ml (2.8-mil gal.) open storage lagoon since 1969 [18]. The storage volume is equivalent to 2.92 cm (1.15 inches) of runoff from the tributary area. A plan of the retention basin is shown on Figure 33. In the two-year period 1969-1970, the lagoon was 93.7 percent effective in capturing overflow volumes. During this period, the combined sewer overflows from 59 of 62 storms were totally contained by the basin. Flow storage in the basin up to 12 hours caused no adverse odor problems. The basin was paved with 5.08 cm (2 inches) of asphalt, and the most effective cleaning of solids was through the use of conventional street sweepers. The basin is dewatered to an existing activated sludge plant after storms with no adverse effect on the biological treatment process. Secondary clarifier capacity, however, had to be doubled to avoid excessive loss of solids during sustained high flows.

Akron, Ohio – An underground 2.7-Ml (0.7-mil gal.) capacity storage facility has been constructed in Akron, Ohio (see Figure 34), utilizing the concept of void space storage [17]. The basin is trapezoidal in cross section (3:1 side slopes) with top dimensions of 61 meters (200 feet) by 61 meters (200 feet) and a usable depth of 3.4 meters (11 feet). It serves a 76-ha (188.5 acre) combined sewered area. The rock fill material completely filling the basin in which the combined sewage is to be temporarily stored is washed gravel, graded from 6.3 to 8.9 cm (2-1/2 to 3-1/2 inches) in diameter. The effective void space is approximately 33 percent of the total volume. The fill is completely enclosed

each tank. Settled solids are resuspended by using submerged eductors along the walls of the tanks. Each eductor is directed to the center channel and is activated after the tanks have been partially drained.

Saginaw, Michigan – The Weiss Street facility, a storage/clarifier combination with a 13,620 cu m (3.6 mil gal.) storage capacity, is currently under construction. The first of three tanks is designed to capture the grit and most of the heavier suspended matter. It operates in series with the remaining two tanks which operate in parallel. The tank bottoms are sloped and troughed to aid in the removal of the settled solids. The tanks are washed down under manual control after each storm using spray nozzles mounted along walkways next to the tanks. The first tank also has a clamshell bucket to remove grit. The last two tanks have horizontal screens placed below the water level just in front of the overflow weirs. A baffle is used to ensure water flows upward through the screens before overflowing the weir.

Operation

It is interesting to note that in all the storage/sedimentation projects, settled sludge is stored until after the storm event. At this time, the contents in the tanks, including the solids, are slowly drained back to the interceptor. The notable exception to this procedure is at Chippewa Falls, Wisconsin, where solids are removed from the basin after dewatering using a front end loader or an ordinary street sweeper for disposal at a sanitary landfill.

Several different methods for resuspending or removing the settled solids are used at the various other storage/sedimentation facilities. At the Humboldt Avenue facility in Milwaukee, Wisconsin, mechanical mixers are used to resuspend the settled solids. Traveling bridges with hydraulic nozzles are used at the Spring Creek plant in New York City. At the Cottage Farm facility, a fixed water spray in conjunction with a sloped and troughed floor is used to flush the solids out of the basins.

The use of tube settlers and separators has been limited mainly to water treatment facilities and some secondary clarifiers at municipal sewage treatment plants. Their use in the storm overflow facilities is found presently only at the Bachman Stormwater Plant in Dallas. To date, the operating data for this plant are insufficient for reaching any conclusions regarding the effectiveness of tube settlers for storm overflows [5, 4].

Seattle, Washington – First operational in late 1971, the system presently has 10 fully equipped regulator stations. such as the one shown on Figure 32, with 3 more under design. All stations are monitored and are designed so that they may be operated by a supervisor from a central control console. Fully automated control will be attempted in 1973. The estimated maximum safe storage in the trunklines and interceptors is 121.1 Ml (32 mil gal.), or roughly equivalent to 0.13 cm (0.05 inches) of direct runoff from the combined sewer and partially separated sewer areas. Interceptor capacity is generally 3 times the estimated year 2000 dry-weather flow. Under supervisory operation, overflows have been reduced in volume by approximately 52 percent.

Minneapolis-St. Paul, Minnesota – This system, operational since April 1969, is quite similar to that in Seattle, except that inflatable Fabridams are used in place of the motor-operated outfall gates, as also shown on Figure 32. Fifteen Fabridams, operated by low pressure air, are located in the major trunks, which are 1.52 to 3.66 meters (5 to 12 feet) in diameter, immediately downstream of the regulator gates. Normally, they are kept in a fully inflated condition forming a dam to approximately mid-height of the conduits. When storm flows are sufficiently large so as to threaten to surcharge the trunk sewers, as indicated by the flow depth monitoring, the Fabridams may be deflated remotely from the control center. On the trunks where they are installed, the total overflow volume reduction has been estimated to range from 35 to 70 percent, depending on the nature of the storm event [7]. Based upon a comparison of pre- and post-project conditions, the number of overflows was reduced 58 percent (from 281 to 117) and the total overflow duration was reduced 88 percent (from 1,183 hours to 147 hours) from April 1969 to May 1970. A major accomplishment of the plan has been the almost total capture of the contaminated spring thaw runoff.

Detroit, Michigan – The Detroit Metropolitan Water Service (DMWS) has installed the nucleus of a sewer monitoring and remote control system for controlling combined sewer overflows from many small storms to the Detroit and Rouge rivers [1]. This system includes telemeter-connected rain gages, sewer level sensors, overflow detectors, a central computer, a central data logger, and a central operating console for pumping stations and selected regulating gates. The cost of the system was slightly over $2.7 million. This system has enabled DMWS to apply such pollution control techniques as storm flow anticipation, first flush interception, selective retention, and selective overflowing.

Other basic cost data for the sedimentation facilities have been presented previously in Table 34 in Section IX, Storage. The data are scattered and no acceptable curve can be derived from them. To assist in evaluating the data, four estimates were made using cost curves from the literature [18]. The resulting points form the curve shown on Figure 41. The curve is intended to give only an indication of the relative magnitude of construction costs for sedimentation facilities.

DISSOLVED AIR FLOTATION

Introduction

Dissolved air flotation is a unit operation used to separate solid particles or liquid droplets from a liquid phase. Separation is brought about by introducing fine air bubbles into the liquid phase. As the bubbles attach to the solid particles or liquid droplets, the buoyant force of the combined particle and air bubble is great enough to cause the particle to rise. Once the particles have floated to the surface, they are removed by skimming. The principal reason for using dissolved air flotation is because the relative difference between the specific gravity of the combined particle and air bubble and the effective specific gravity of water is made significantly higher and is more controllable than using plain sedimentation. Thus, according to Stokes' Law, the velocity of the particle and air bubble is greater than the particle itself because of the greater difference in specific gravities. In engineering terms this means higher overflow rates and shorter detention times can be used for dissolved air flotation than for conventional settling.

This process has a definite advantage over gravity sedimentation when used on combined sewer overflows in that particles with densities both higher and lower than the liquid can be removed in one skimming operation. Dissolved air flotation also aids in the removal of oil and grease which are not as readily removed during sedimentation.

There are two basic processes for forming the air bubbles: (1) dissolve air into the waste stream under pressure, then release the pressure to allow the air to come out of solution, and (2) saturate the waste with air at atmospheric pressure, then apply a vacuum over the flotation tank to reduce the pressure allowing the bubbles to form. The first process is used most commonly. There are three methods for implementing the first process. The first method is the full flow method where all the flow is pressurized and mixed with air before entering the flotation tank. The second is

Section IX

STORAGE

Storage is, perhaps, the most cost effective method available for reducing pollution resulting from combined sewer overflows and to improve management of urban stormwater runoff. As such, it is the best documented abatement measure in present practice. Storage, with the resulting sedimentation that occurs, can also be thought of as a treatment process.

Storage facilities possess many of the favorable attributes desired in combined sewer overflow treatment: (1) they are basically simple in design and operation; (2) they respond without difficulty to intermittent and random storm behavior; (3) they are relatively unaffected by flow and quality changes; and (4) they are capable of providing flow equalization and, in the case of tunnels, transmission. Frequently they can be operated in concert with regional dry-weather flow treatment plants for benefits during both dry- and wet-weather conditions. Finally, storage facilities are relatively fail-safe and adapt well to stage construction. Drawbacks of such facilities are related primarily to their large size (real estate requirements), cost, and visual impact. Also, access to treatment plants or processes for dewatering, washdown, and solids disposal is required.

Storage facilities presently in operation have been sized on the basis of one or more of several possible criteria. The facilities should: (1) provide a specified detention time for runoff from a storm of a given duration or return frequency; (2) contain a given volume of runoff from the tributary area, such as the first 1.27 cm (1/2 inch) of runoff; (3) contain the runoff from a given volume of rain, such as the runoff from 1.27 cm (1/2 inch) of rain; or (4) contain a specified volume. Because storage facilities are generally designed to also function as sedimentation and/or disinfection tanks, a major advantage is the SS reduction of any overflows from the storage units. Particular

split flow flotation where part of the incoming flow is pressurized and mixed with air before being recombined with the remaining flow and entering the flotation tank. And the last is the recycle system in which a portion of the effluent is pressurized before being returned and mixed with the incoming flow. The last two methods are used for the larger size units since they require only a portion of the total flow to be pressurized. In combined sewer overflow treatment studies the split flow method has been used because the flotation tank only needs to be designed for the actual flow arriving at the plant and need not include any recycled flow. However, subsequent laboratory studies have indicated better removals may be achieved by using the recycle type of dissolved air flotation [39].

Typical facilities consist of saturation tanks to dissolve air into a portion of the flow, a small mixing chamber to recombine the flow that has been pressurized with that which has not, and flotation tanks or cells. In most flotation cells, two sets of flight scrapers, top and bottom, are used. These remove the accumulated float and settled sludge. At two major combined sewer overflow study sites, however, the bottom scrapers were not used. Instead, 50-mesh rotating fine screens ahead of the dissolved air flotation units removed the coarser material in the waste flows, thus eliminating the majority of settleable material. A schematic of the dissolved air flotation facilities at Racine, Wisconsin, is shown on Figure 42. Photographs of a typical dissolved air flotation facility are shown on Figure 43.

Design Criteria

The principal parameters that affect removal efficiencies are (1) overflow rate, (2) amount of air dissolved in the flows, and (3) chemical addition. Chemical addition has been used to improve removals, and ferric chloride has been the chemical most commonly added.

Any one of several methods may be used to size a dissolved air flotation facility. Values for design parameters used in the combined sewer overflow studies are listed in Table 37. The most commonly used design equation is that recommended by the American Petroleum Institute [1].

When designing dissolved air flotation, regardless of whether by formulated equations found in the literature or by the design parameters listed previously in Table 37, certain items should be remembered. First, the saturation tank should be a packless chamber to prevent solids plugging or buildup and second, excess amounts of air should be supplied

The design of the METRO interceptor system provides a positive means for controlling these bypassed flows. A regulator station (Figure 32) at each major trunk sewer controls both the diversion of combined sewage into the interceptor and the overflow from the trunk (sewage in excess of the capacity of the interceptor). The volume of flow diverted to the interceptor is automatically controlled by modulating the regulator gate position in response to changes in the level of sewage in the interceptor. As the level in the interceptor rises above a preset maximum, the regulator gate closes to reduce the volume of diverted flow and maintain the preset level. Storm flow in excess of the diverted flow is stored in the trunk sewer and the level of the sewage in the trunk commences to rise. When the level rises above a preset maximum, the outfall gate will open automatically to discharge the excess storm flow and modulate to maintain the preset maximum level in the trunk.

Accomplishments – The most demonstrative method of pointing out accomplishments is to show the results of interception of an actual storm. Two days of CATAD printouts were obtained from METRO, one set for the storm flow that occurred on November 25, 1972, and the second set for the dry-weather flow on November 14, 1972. The dry-weather flow data were used to establish an approximate dry-weather flow base for comparison purposes. The particular regulator station analyzed is the Denny-Lake Union (identified as LUN DENNY RS in the CATAD printouts). A sample storm log is shown in Table 33. The data included in this log are the rainfall occurring and the maximum rainfall rate during the hour, the maximum overflow rate and the overflow volume occurring during the hour, and the total overflow volume from the start of the overflow. A 16-hour period from 0700 hours to 2300 hours was used for the comparison. From the data, hydrographs were generated which yielded a dry-weather flow volume of 140,540 cu m (37.13 mil gal.) and a wet-weather flow volume of 204,650 cu m (54.07 mil gal.). The potential overflow volume then is the difference between the two or 64,120 cu m (16.94 mil gal.). The amount of actual overflow from the station allowed by the CATAD system was 11,660 cu m (3.08 mil gal.). Thus the effective storm runoff containment for this particular storm and regulator station was approximately 82 percent.

Several improvements have been observed in Elliott Bay following the August 1970 interception and regulation of 12 major combined sewer overflows which are that reductions in coliform levels range from 63 to 98 percent and that monitoring indicates an improvement of between 2 and 3 mg/l of dissolved oxygen in the bay.

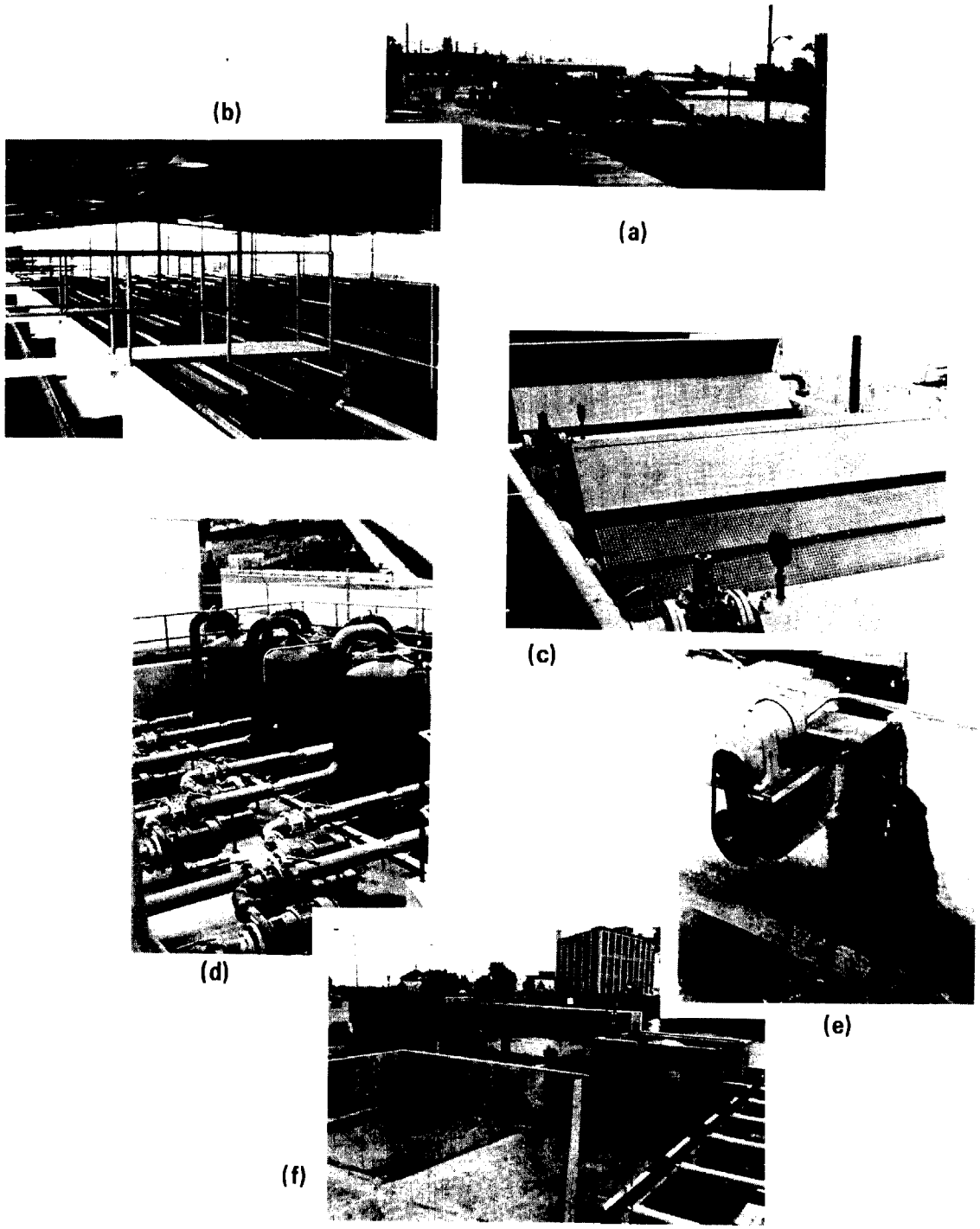

Figure 43. Dissolved air flotation facilities (Racine)

(a) Overview of site during construction (b) Overview of flotation tanks after light roof addition (c) Fine drum screen pretreatment units (d) Air saturation (pressurization) tanks (e) End of float drawoff (helical cross conveyor) (f) Float holding tanks (for temporary storage before feedback to interceptor)

Table 30. TYPICAL CATAD REGULATOR STATION MONITORING HOURLY LOG

11/14/72 1000 W POINT SYS HOURLY LOG REGULATOR STATION

	TRKLVL INTLVL	TRKSET INTSET	TIDE	OUTPOS REGPOS	OVRFLO DIVFLO	TRKFLO UPSFLO	STOFLO DNSFLO	UNUSTO EXPHAZ
LOC DENNY RS								
	100.76			0.9	0.0	3.7	0.1	0.14
	0.00	96.56		100.9	3.6			
LUN DENNY RS								
	100.02	109.88	105.89	-0.2	0.0	10.6		
	94.73	96.56		100.5	10.6	32.6	47.0	
KING RS								
	105.23		105.34	-0.1	0.0	3.5	0.1	0.03
	97.70	102.40		99.3	3.4	1.4	4.9	-0.5
CONN RS								
	101.24	106.37	109.38	-0.2	0.0	3.1	0.0	0.31
	97.46	101.35		99.8	3.1	31.6	34.7	
LANDER RS								
	102.27	106.01	106.06	-0.1	0.0	6.3	0.0	0.57
	98.91	102.75		99.4	6.3	28.6	35.1	
2 HANFORD RS								
	100.97	105.23	104.81	0.0	0.0	6.4	0.7	2.15
	98.81	102.75		100.0	5.7	20.8	26.6	
BRANDON RS								
	102.37	105.93	105.59	-0.1	0.0	0.0		
	98.96	100.40		102.9	0.0	14.0	14.0	
MICHIGAN RS								
	101.50	105.69	105.35	-0.4	0.0	0.0		
	100.30	101.65		102.9	0.0	12.0	12.0	
CHELAN RS								
	101.56	107.98	105.61	0.1	0.0	4.4		
	100.53	103.21		100.3	4.4		2.7	
HARBOR RS								
	108.38		106.09	-0.2	0.0	0.9		
	108.08	109.13		99.5	0.9		0.9	
W MICH RS								
	116.46			0.0	0.0	0.7		
	107.41	108.37		99.9	0.7	3.1	3.8	
8TH SOUTH RS								
	100.49		105.76	0.3	0.0	2.8		
	98.12	99.58		100.4	2.8		2.2	
DEXTER RS								
	136.56	144.34			0.0	4.1	-0.1	1.09
	134.28	137.75		36.3	4.2		4.2	-3.6
L CITY RS								
	150.36	157.06			0.0	13.4		
	114.33			100.1	13.4		38.9	
1 HANFORD RS								
	101.61	108.05			0.0			
	95.40			-0.7				

and bled off since oxygen has a higher solubility than nitrogen. Finally, the pressure release valve and the discharge line from the saturation tank should be designed to induce good mixing with the remainder of the flow and promote fine bubble formation [1].

Overflow Rate – The removals achieved by dissolved air flotation are governed by several factors. The most critical design parameter is the surface overflow rate which can be easily translated into the rise rate of the particle and air bubble. To remove an air particle with a given rise rate, the corresponding overflow rate must not be exceeded. In rough terms, it has been reported that overflow rates above 6.1 cu m/hr/sq m (3,600 gpd/sq ft) start to reduce removal efficiencies. Below this value the removals remain relatively constant.

Dissolved Air Requirements – Also important in affecting removals is the amount of air dissolved. An insufficient supply of dissolved air reduces the amount of air available for each solid particle, and thus the difference between the air-particle density and the density of water is not great enough to meet the minimum rise rate. Also, the better the atomization or bubble coverage over the plan area of the tank, the better the chance for collision between the bubbles and the suspended particles. The amount of air supplied to a split flow flotation facility is dependent on the percentage of flow saturated with air and the pressure. In the studies using combined sewer overflows, the optimum value for the percentage of flow pressurized averages around 20. In one study with a full flow system, removals were found to be directly related to the pressure used in the saturation tank, see Figure 44 [17]. The optimum pressure is 3.5 to 4.2 kg/sq cm (50 to 60 psi) which agrees with other studies performed [40, 2].

Flotation Aids – Probably, the most controllable factor affecting particle removals is the amount and type of chemicals added. In all studies, some kinds of chemicals were added to improve removals. In one case, small floating beads were used in lieu of air to provide the flotation [12]. This proved to be unsuccessful. The majority of chemicals added, however, were polyelectrolytes and ferric chloride. Ferric chloride has been reported to be the most successful and has improved SS removals by more than 30 percent. The use of polyelectrolytes alone and in one case bentonite clay with polyelectrolytes has not resulted in important increases in removal efficiencies. Lime and alum have also been used.

3. Short-term weather prediction would be obtained by rain gages located throughout the METRO drainage area.

Water quality studies – Since 1963, METRO has been engaged in a comprehensive water quality monitoring program throughout the entire metropolitan drainage area. Upon receipt of the CATAD demonstration grant in 1967, additional specialized water quality monitoring studies were added to the existing program to concentrate on certain areas that contribute to combined sewer overflows.

The objectives of the demonstration grant water quality studies were twofold. First, new water quality studies were begun or old programs modified to show how receiving water quality and other dynamic system parameters have changed during the periods of expansion, interception, regulation, and separation. Second, a base level for various parameters was to be established to be used as a tool for measuring the results of the CATAD demonstration project. The studies have been divided into two general areas related to the collection system itself and the receiving waters adjacent to the municipality. Weather and other pertinent environmental factors are correlated with data from the two main study categories.

Overflow sampling was divided into three categories: physical and chemical sampling, bacteriological sampling, and overflow volume computation.

Examples of a typical sewer sampling station and receiving water sampling and monitoring station are shown on Figure 15 (a, b, c).

System Operation – The CATAD system controls comprise a computer-based central facility for automatic control of remote regulator and pumping stations. The control center is located at the METRO office building with satellite terminals at the West Point and Renton treatment plants. The principal features of the control center include a computer, its associated peripheral equipment, an operators console, map display, and logging and events printers [23].

Remote monitoring and control units have been provided for 36 remote pumping and regulator stations. Twenty-four remote control units have been installed at pumping and regulator stations on the trunk and interceptor sewers leading to the West Point sewage treatment plant and nine remote control units have been installed at pumping stations along the interceptor sewers transporting primarily sanitary

Table 38. TYPICAL REMOVALS ACHIEVED WITH SCREENING/DISSOLVED AIR FLOTATION

	Without chemicals		With chemicals	
Constituents	Effluent, mg/l	% Removal	Effluent, mg/l	% Removal
SS	81-106	56	42-48	77
VSS	47[a]	53[a]	18-29	70
BOD	29-102	41	12-20	57
COD	123[a]	41[a]	46-83	45
Total N	4.2-16.8	14	4.2-15.9	17
Total P	1.3-8.8	16	0.5-5.6	69

a. Only one set of samples.

grit and most of the nonfloatable material successfully. The system used the split flow method for dissolving air into the flow. Approximately 20 percent of the total flow was pressurized to 2.8 to 3.5 kg/sq cm (40 to 50 psi) in a packless saturation tank, then remixed with the remainder of the flow for one minute in a mixing chamber. Flow then entered the flotation cell for flotation and removal of the floating matter (float) by scrapers. The float was collected in a holding tank for discharge back to the dry-weather interceptor.

Racine, Wisconsin – The Racine prototype facilities are essentially the same design as the one in Milwaukee. It, however, is constructed partly underground out of concrete. There are two plants: one 615 l/sec (14 mgd) and the other 1,925 l/sec (44 mgd) in size. Flow to each plant passes through a 2.5 cm (1-inch) bar screen before being lifted to the fine screens by screw pumps. Each plant is built with multiple flotation tanks to accommodate a high flow variation. A separate air saturation tank and pump serves each flotation tank. Flow into the flotation tanks is controlled by weirs which allow sequential filling of only as many tanks as are necessary to handle the flow.

should be known so that runoff quantities may be anticipated. Thus, the rain gage network forms an integral part of the system. Once the storm starts affecting the collection system, the flow quantity and movements must be known for decision-making, control implementation, and checking out the system response. The advantages of knowing whether or not an overflow is occurring are obvious, but consider the added advantage of knowing at the same time that the feeder line is only half full and/or that the interceptor/treatment works are operating at less than full capacity. By initiating controls, say closing a gate, the control supervisor can force the feeder line to store flows until its capacity is approached, or can increase diversion to the interceptor, or both. If he guesses wrong, the next system scan affords him the opportunity to revise his strategy accordingly.

Thus, system control or management converts the combined sewer system from an essentially static system to a dynamic system where the elements can be manipulated or operated as changing conditions dictate.

The degree of automatic control or computer intelligence level varies among the different cities. For example, in Cincinnati, monitoring to detect unusual or unnecessary overflows is applied and has been evaluated as being successful [5]. In Minneapolis-St. Paul, the Metropolitan Sewer Board is utilizing a central computer that receives telemetered data from rain gages, river level monitors, sewer flow and level sensors, and mechanical gate diversion points to assist a dispatcher in routing stormwater flows to make effective use of in-line sewer storage capacity [2]. The use of rain gages, level sensors, overflow detectors, and a central computer to control pump stations and selected regulating gates is underway in Detroit [3]. The Municipality of Metropolitan Seattle (METRO) is incorporating the main features of the above projects plus additional water quality monitoring functions [30]. The City and County of San Francisco have embarked on the initial phase of a system control project for which the ultimate goal is complete hands-off computerized automatic control. They are currently collecting data on rainfall and combined sewer flows to aid in the formulation of a system control scheme. More details of the San Francisco system are described in Section XIII under Master Plan Examples. The main difference between the San Francisco and Seattle projects, besides size, is hands-off versus hands-on automatic supervisory control [16].

As an example of a complex "systems approach" to collection system control, various aspects of the Seattle master plan are discussed in detail below.

Table 39. SUMMARY OF PERFORMANCE CHARACTERISTICS, BAKER STREET DISSOLVED AIR FLOTATION FACILITY [16] SAN FRANCISCO, CALIFORNIA

	Effluent concentration, mg/l		Removal efficiency, %		
Constituent	Maximum	Minimum	Maximum	Minimum	Average
BOD_5	114.0	34.0	70.5	13.5	46.1
COD	205.0	53.0	77.0	10.8	44.4
Settleable solids	15.0	<0.1	93.5	0.0	47.7
Oil and grease	26.3	3.3	63.2	0.0	29.1
Floatables	0.57	<0.01	100.0	60.0	95.2
Total coliform	2.4×10^5 [a]	<30 [a]	>99.99	99.44	99.92
Fecal coliform	2.4×10^5 [a]	<30 [a]	>99.99	99.44	99.91
Total nitrogen	20.1	10.6	53.0	0.0	18.4
Orthophosphate	4.45	<0.07	99.0	43.4	80.9
Color	22.0	2.0	95.0	15.8	57.3

a. MPN/100 ml

Advantages and Disadvantages

The advantages of dissolved air flotation are that (1) moderately good SS and BOD_5 removals can be achieved; (2) the separation rate can be controlled by adjusting the amount of air supplied; (3) it is ideally suited for the high amount of SS found in combined sewer overflows; (4) capital cost is moderate owing to high separation rates, high surface loading rates, and short detention times; and (5) the system can be automated. Disadvantages of dissolved air flotation include: (1) dissolved material is not removed without the use of chemical additions; (2) operating costs are relatively high compared to other physical processes; (3) greater operator skill is required; and (4) provisions must be made to prevent wind and rain from disturbing the float.

System Components and Operations

The components of a remote monitoring and control system can be classified as either intelligence, central processing, or control.

The intelligence system is used to sense and report the minute-to-minute system status and raw data for predictions. Examples include flow levels, quantities, and (in some cases) characteristics at significant locations throughout the system; current treatment rates, pumping rates, and gate (regulator) positions; rainfall intensities; tide levels; and receiving water quality.

Quality observations and comparisons may assist in determining where *necessary* overflows can be discharged with the least impact. The central processing system is used to compile, record, and display the data. Also, on the basis of prerecorded data and programming, the processer (computer) may convert, for example, flow levels and gate positions into estimates of volumes in storage, overflowing, and intercepted and may compute and display remaining available capacities to store, intercept, treat, or bypass additional flows.

The control system provides the means of manipulating the system to maximum advantage. The devices include remotely operated gates, valves, inflatable dams, regulators, and pumps. Reactions to actuated controls and changed conditions (i.e., increased rainfall, pump failure, and blocked gate), of course, are sensed by the intelligence system, thus reinitiating the cycle.

Representative elements of a typical system are shown on Figure 31.

Because of the frequency and repetitiveness of the sensing and the short time span for decision-making, computers must form the basis of the control system. The complexity of the hydrology and hydraulics of combined systems also dictates the need for extensive preprogramming to determine cause-effect relationships accurately and to assist in evaluating alternative courses of action. To be most effective, real-time operational control must be a part of an overall management scheme included in what is sometimes called a "systems approach."

System Control

Before storm flow collection system control can be implemented, the direction, intensity, and duration of the storm

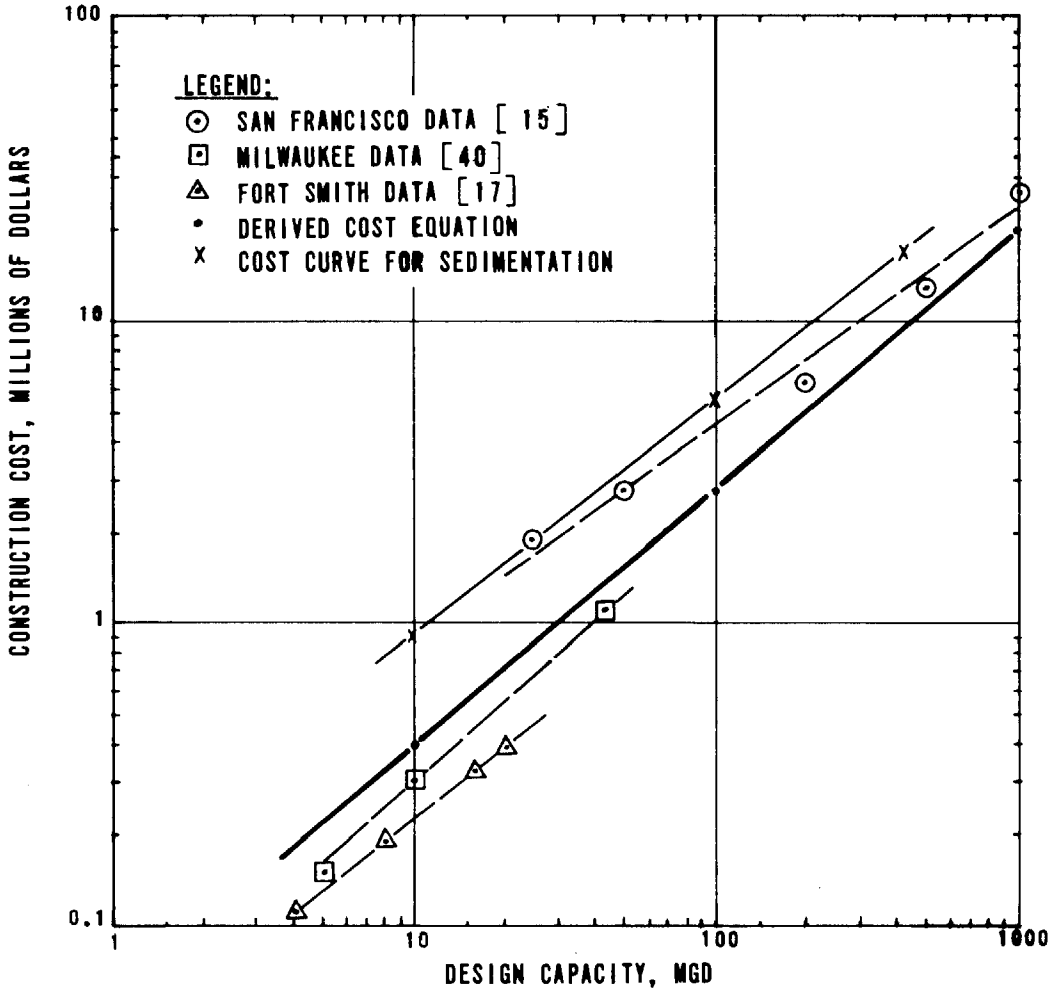

NOTE: MGD X 43.808 = L/SEC

Figure 45. Construction cost versus design capacity for dissolved air flotation, ENR 2000

> Regulators and their appurtenant facilities should be recognized as devices which have the dual responsibility of controlling both quantity and quality of overflow to receiving waters, in the interest of more effective pollution control. [50]

As mentioned previously, new regulator devices have been developed that provide both quantity and quality control. These include electrode potential along with the swirl regulator/concentrator, spiral flow regulator, vortex regulator, and high side-spill weir. Thus, in the future, the choice of a regulator must be based on several factors including: (1) quantity control, (2) quality control, (3) economics, (4) reliability, (5) ease of maintenance, and (6) the desired mode of operation (automatic or semiautomatic).

Regulator Costs – Selected installed construction costs are shown in Table 29. These costs are to be used for order-of-magnitude reference only because of the wide variance of construction problems, unit sizes, location, number of units per installation, and special appurtenances.

The cost of maintaining sewer regulators as reported in a recent national survey also vary widely [10]. In most cases, the reported expenditures are probably not adequate to maintain the regulators in completely satisfactory condition. The annual cost per regulator required to conduct a minimal maintenance program is listed in Table 29.

REMOTE MONITORING AND CONTROL

One alternative to the tremendous cost and disruption caused by sewer separation is to upgrade existing combined sewer systems by installing effective regulators, level sensors, tide gates, rain gage networks, sewage and receiving water quality monitors, overflow detectors, and flowmeters and then apply computerized collection system control. Such system controls are being developed and applied in several U.S. cities. The concepts of control systems have been introduced in Section VI. As applied to collection system control, they are intended to assist a dispatcher (supervisor) in *routing and storing combined sewer flows to make the most effective use of interceptor and line capacities.* As the components become more advanced and operating experience grows, system control offers the key to total integrated system management and optimization.

the same as for their use in dry-weather treatment facilities. The reader is referred to the literature for the necessary details [25]. Except for bar screens, their use for combined sewer overflows may be limited. Coarse screens are used as a pretreatment and protection device at the Cottage Farm Detention and Chlorination Facility in Boston. Bar screens are recommended for almost all storage and treatment facilities and pump stations for protection of downstream equipment. Typical screenings from a 1-inch bar screen are shown on Figure 46.

Fine Screens and Microscreens – Fine screens and microscreens are discussed together because in most cases they operate in a similar manner. The types of units found in these classifications are rotating fine screens, hereinafter referred to as drum screens; microscreens, commonly called microstrainers; rotary fine screens; and hydraulic sieves (static screens); vibrating screens; and gyratory screens. To date, vibrating screens and gyratory screens have not been used in prototype combined sewer overflow treatment facilities.

Description of Screening Devices

Microstrainers and Drum Screens – The microstrainer and drum screen are essentially the same device but with different screen aperture sizes. A schematic of a typical unit is shown on Figure 47. They are a mechanical filter using a variable, low-speed (up to 4 to 7 rpm), continuously backwashed, drum rotating about a horizontal axis and operating under gravity conditions. The filter usually is a tightly woven wire mesh fabric (called screen) fitted on the drum periphery in paneled sections. The drum is placed in a tank, and wastewater enters one end of the drum and flows outward through the rotating screen. Seals at the ends of the drum prevent water from escaping around the ends of the drum into the tank. As the drum rotates, filtered solids, trapped on the screen, are lifted above the water surface inside the drum. At the top of the drum, the solids are backwashed off the screen by high-pressure spray jets, collected in a trough, and removed from the inside of the drum. In most cases, both the rotational speed of the drum and the backwash rate are adjustable. Backwash water is usually strained effluent. The newer microstrainers use an ultraviolet light irradiation source alongside the backwash jets to prevent growth of organisms on the screens [36]. The drum is submerged from approximately two-thirds to three-quarters of its diameter.

As noted previously, the usual flow pattern is radially outward through the screen lining the drum; however, one drum screen application used a reverse flow pattern [41].

regulator [44]. A prototype regulator has been successfully evaluated at Nantwich, England. A third generation device is being developed for American practice.

Stilling Pond Regulator – The stilling pond regulator, as used in England, is a short length of widened channel from which the settled solids are discharged to the interceptor [1]. Flow to the interceptor is controlled by the discharge pipe which is sized so that it will be surcharged during wet-weather flows. Its discharge will depend on the sewage level in the regulator. Excess flows during storms discharge over a transverse weir and are conveyed to the receiving waters. The use of the stilling pond may provide time for the solids to settle out when the first flush of stormwater arrives at the regulator and before discharge over the weir begins.

This type of regulator is considered suitable for overflows up to 85 l/sec (30 cfs). If the stilling pond is to be successful in separating solids, it is suggested that not less than a 3-minute retention be provided at the maximum rate of flow [34].

High Side-Spill Weirs – Unsatisfactory experience with side-spill weirs in England has led to the development of a high side-spill weir, referred to there as the high double side-weir overflow. These weirs are made shorter and higher than would be required for the normal side-spill weir. The rate of flow to the treatment plant may be controlled by use of a throttle pipe or a float-controlled mechanical gate.

The ratio of screenings in the overflow to screenings in the sewage passed on to treatment was 0.5, the lowest of the four types investigated in England. This device has the best general performance when compared to the English vortex and stilling pond regulators and the low side-overflow weir [1].

Tide Gates – Tide gates, backwater gates, or flap gates are used to protect the interceptors and collector sewers from high water levels in receiving waters and are considered a regulating appurtenance when used for this purpose.

Tide gates are intended to open and permit discharge at the outfall when the flow line in the sewer system regulator chamber produces a small differential head on the upstream face of the gate. Some types of gates are sufficiently heavy to close automatically, ahead of any water level rise in the receiving body. With careful installation and balancing, coupled with an effective preventive maintenance program, the ability of the gate to open during overflow

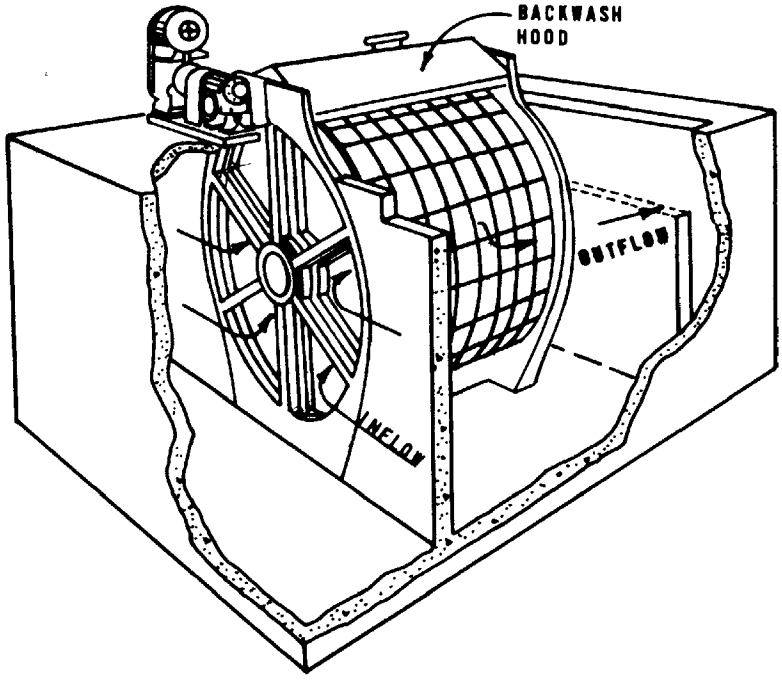

Figure 47. Schematic of a microstrainer or drum screen

The drum was completely submerged within an influent tank, and flow passed inward through the circumference of the drum. Submerged backwash jets were placed inside the drum.

Screen openings for microstrainers range from 15 to 65 microns and for drum screens, from 100 to 600 microns. The various sizes of screen openings that have been tested on combined sewer overflows, and other data, are listed in Table 42.

Microstrainers and drum screens can be used in many different treatment schemes. Their versatility comes from the fact that the removal efficiency is adjustable by changing the aperture size of the screen placed on the unit. The primary use of microstrainers would be in lieu of a sedimentation basin to remove suspended matter. They can also be used in conjunction with chemical treatment, such as ozone or chlorine for chemically disinfecting/oxidizing both organic and nonorganic oxidizable matter or microorganisms

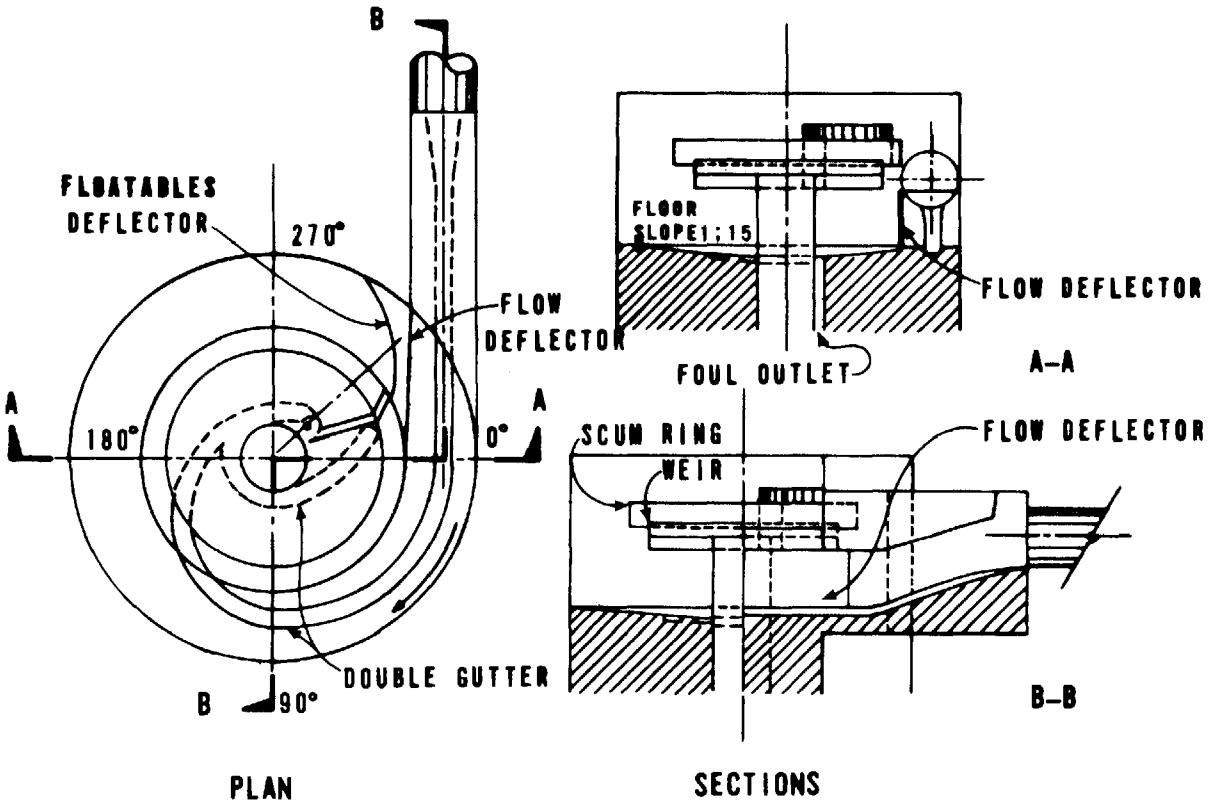

Figure 29. Recommended configuration for swirl concentrator [50]

means of separating solids from the overflow. The simplest form of the regulator is shown on Figure 30.

The heavily polluted sewage is drawn to the inner wall. It then passes to a semicircular channel situated at a lower level leading to the treatment plant. The proportion of the concentrated discharge will depend on the particular design. The overflow passes over a side weir for discharge to the receiving waters. Surface debris collects at the end of the chamber and passes over a short flume to join the sewer conveying the flow to the treatment plant.

The authors of the model study report that even the simplest application of the spiral flow separator will produce an inexpensive regulator that will be superior to many existing types. They also stated that further research is necessary to define the variables, the limits of applications, and the actual limitations of the spiral flow

size of the screen openings because this determines the initial size of particles removed. The efficiencies of a microstrainer and drum screens treating a waste with a normal distribution of particle sizes will increase as the size of screen opening decreases. Suspended solids removals reported in various studies within the United States bear this out, as shown on Figure 48 [41, 26, 40, 22, 35, 27, 23]. In reality, however, removals are based on the relative sizes between the screen opening and the particle size. A drum screen with a large screen opening can achieve high removals if the majority of the solids in the waste flows are larger than the screen opening. It appears important not to pump ahead of microstrainers because this tends to break up fragile particles and thereby reduce removal efficiencies. The use of positive displacement pumps or spiral pumps may be permissible.

The second most important condition affecting removal efficiencies, especially for microstrainers, is the thickness of filtered material on the screen. Whenever the thickness of this filter mat is increased, the suspended matter removal

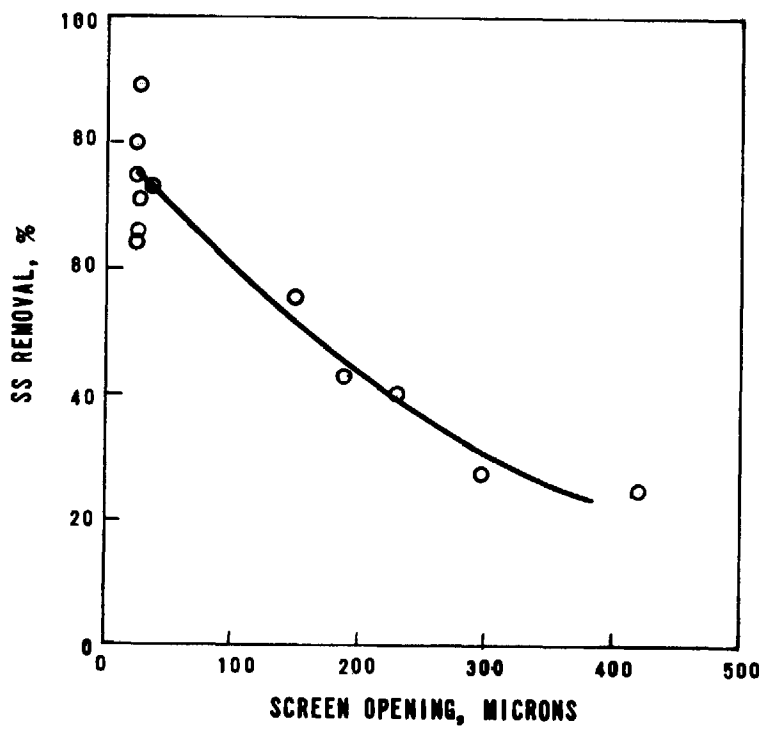

Figure 48. SS removal versus screen opening

regulator and the swirl regulator/concentrator is the flow field pattern. Another major difference is that larger flow rates can be handled in the prototype swirl regulator/concentrator (at Lancaster, Pennsylvania, the estimated increase is 4 to 6 times greater) than in the equivalent size vortex regulator.

A hydraulic laboratory model was used to determine geometric configuration and settleable solids removal efficiencies. Figure 28 shows the hydraulic model in action. Note the solids separation and concentration toward the underflow pipe to the treatment plant.

As a result of both mathematical and hydraulic modeling, the performance of the prototype has been predicted. Based upon a peak storm flow to peak dry-weather flow ratio of 55 to 1, 90 percent of the solids (grit particles with a specific gravity of 2.65, having a diameter greater than 0.3 mm and settleable solids with a specific gravity of 1.2, having a diameter larger than 1.0 mm) are concentrated into 3 percent of the flow [50, 15]. Hydraulic testing indicates that removal efficiency increases as the peak storm flow to peak dry-weather flow decreases. The recommended configuration for the swirl regulator/concentrator is shown on Figure 29.

The foul-sewer channel in the bottom of the swirl concentrator is sized for peak dry-weather flow. During wet-weather flows the concentrated settleable solids are carried out the foul-sewer into an interceptor.

There are no moving parts so maintenance and adjustment requirements are minimal. Fine tuning control is provided via a separate chamber with a cylinder gate on the "foul sewer" outlet to the interceptor. Remote control, although not readily adaptable, could be accomplished by providing a larger-than-necessary foul sewer (also diminishes the chances of clogging) and throttling this line with a remotely controlled gate.

Spiral Flow Regulator – The spiral flow regulator is based on the concept of using the secondary helical motion imparted to fluids at bends in conduits to concentrate the settleable solids in the flow. A bend with a total angle between 60 and 90 degrees is employed. Hydraulic model studies of this device, carried out at the University of Surrey, England [44], indicated that this is a feasible

preliminary and more work is needed to verify them at a larger scale and at the Philadelphia pilot plant site.

Screen cleaning – Of the several conditions which affect the operation of the microstrainer and drum screen, the most notable is proper cleaning of the screen. Spray jets, located on the outside of the screen at the top of the drum, are directed in a fan shape onto the screen. It has been found that the pressure of this backwash spray is more important than the quantity of the backwash [13, 6]. There does not seem to be any relationship between the volume of backwash water applied and the hydraulic loading of the microstrainer or drum screen. Thus, a constant backwash rate can be applied regardless of the hydraulic loading [23]. Results of tests at Philadelphia have indicated no backwashing problems.

Occasionally the microstrainer and, to a lesser degree, the drum screen cannot be effectively cleaned by the backwash jets. This condition, called "blinding" of the screen, is generally associated with oil, grease, and bacterial growths [13, 41, 23, 6]. Oil and grease cannot be removed effectively without using a detergent or other chemical, such as sodium hypochlorite, in the backwash water [6]. Generally, microstrainers and drum screens with the finer screen openings (<147 microns) should not be used in situations where excessive oil and grease concentrations are likely to be encountered from a particular drainage area. Bacterial growths also have caused blinding problems on microstrainers, although they have not been a major problem with drum screens. The use of ultraviolet light is an effective means of control, as mentioned previously. It is important, however, to use an ultraviolet light source of the proper frequency designed to minimize the amount of ozone created [29]. With proper construction of the microstrainer it is possible to reduce the chances of the creation of ozone [26].

Screen life – In a wet environment, ozone is relatively corrosive to the stainless steel screens. Since screens are woven with very fine stainless steel wires, the amount of corrosion needed to break through a strand of the wire is small [29]. In fact, it has been reported that ozone in a wet environment is more corrosive to the stainless steel wires than chlorine in a wet environment [29]. Therefore, it is important to reduce the concentration of ozone and/or chlorine in and around the microstrainer. Both chlorine and ozone have been used upstream of the microstrainer, but enough detention time has been allowed so that concentrations of these chemicals are relatively low. It is better

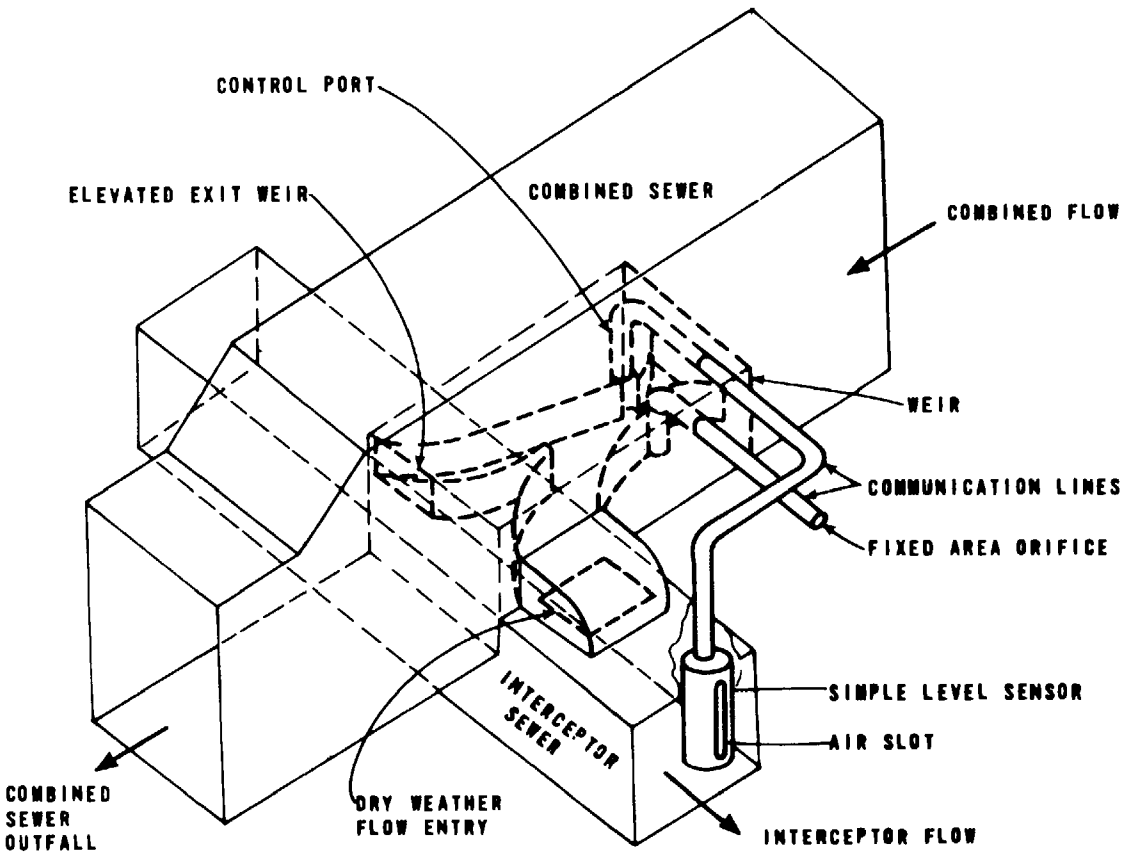

Figure 26. Schematic arrangement of a fluidic sewer regulator [10]

is induced by the kinetic energy of the sewage entering the tank (see Figure 27). Flow to the treatment plant is deflected, and discharges through a pipe at the bottom near the center of the channel. Excess flow in storm periods discharges over a circular weir around the center of the tank and is conveyed to receiving waters. The rotary motion causes the sewage to follow a long path through the channel thus setting up secondary flow patterns which create an interface between the fluid sludge mass and the clear liquid. The flow containing the concentrated solids is directed to the interceptor. Using synthetic sewage in model studies at Bristol, England, suspended solids removal efficiencies of up to 98 percent were reported [47]. Another series of experiments elsewhere on a model vortex regulator using raw sewage indicated poor performance in removing screenable solids under certain conditions [1]. This lack of overflow

Table 43. DATA SUMMARY ON MICROSTRAINERS AND DRUM SCREENS

Location	Reference number	Screen opening, micron	Screen area: Total, sq ft	Screen area: Submerged, sq ft	Screen area: Submerged, %	Flux rate, gpm/sq ft	Headloss, in.	Backwash: Pressure, psi	Backwash: % of total flow
(1)	(2)	(3)	(4)	(5)	(6)	(7)	(8)	(9)	(10)
Philadelphia, Pa.	[27]	23	9.4	7.4	78	40	23	40	<0.5
	[26]	23	9.4	7.4	78	25	12[a]	40	NA[b]
	[26]	23	47.0	28[a]	60[a]	9.1	4.7[a]	40	NA
	[26]	23	47.0	35[a]	74[a]	6.9	3.6[a]	40	NA
	[26]	35	47.0	35[a]	74[a]	5.4	3.4[a]	40	NA
Milwaukee, Wis.	[40]	297	144.0	72-90	51-64	40-50	12-14 max	1[d]	0.85[e]
Cleveland, Ohio	[22]	420	12.6	NA	NA	100	NA	NA	NA
Lebanon, Ohio	[6]	23	15.0	9	60	~7.0	6 max	NA	5.3
Chicago, Ill.	[23]	23	314.0	NA	NA	6.6	6 max	20-55	3.0
Letchworth, England	[35]	23	47.0	NA	NA	3.1	NA	NA	NA
Lebanon, Ohio	[6]	35	15.0	9	60	~7.0	6 max	NA	5.3
East Providence, R.I.	[41]	150	0.28	0.28	100[f]	18-25	NA	NA	28
	[41]	190	0.28	0.28	100[f]	18-25	NA	NA	28[f]
	[41]	230	0.28	0.28	100[f]	18-25	NA	NA	28

Table 43 continued on page 243.

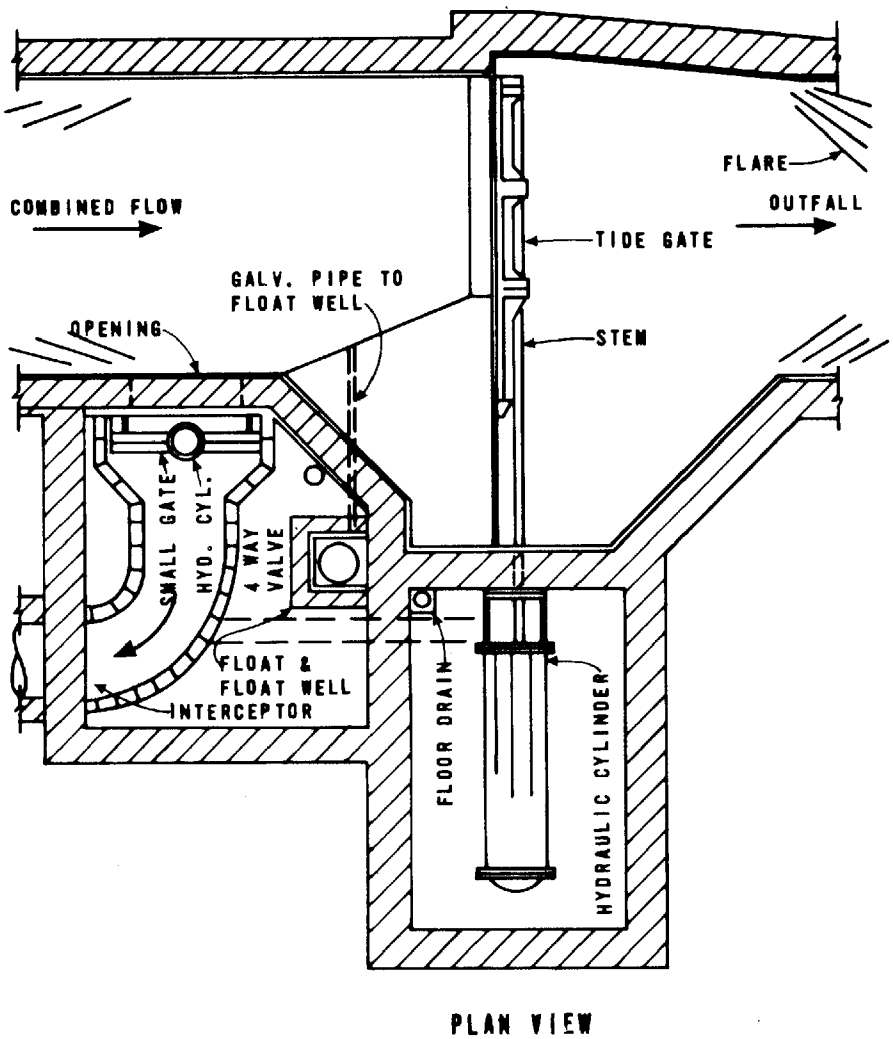

CYLINDER - OPERATED GATE REGULATOR

PHILADELPHIA [11]

Figure 25. Typical automatic dynamic sewer regulator

Table 44. RECOMMENDED MICROSTRAINER DESIGN PARAMETERS FOR COMBINED SEWER OVERFLOW TREATMENT

Screen opening, microns	
Main treatment	23-35
Pretreatment	150-420
Screen material	Stainless steel
Drum speed, rpm	
Maximum speed	5-7
Operating range	0-max speed
Flux rate of submerged screen, gpm/sq ft	
Low rate	5-10
High rate	20-50
Headloss, in.	6-24
Submergence of drum, %	60-80
Backwash	
Volume, % of inflow	<0.5-3
Pressure, psi	40-50
Type of automatic controls	Drum speed proportional to headloss

Note: gpm/sq ft x 0.679 = l/sec/sq m
psi x 0.0703 = kg/sq cm

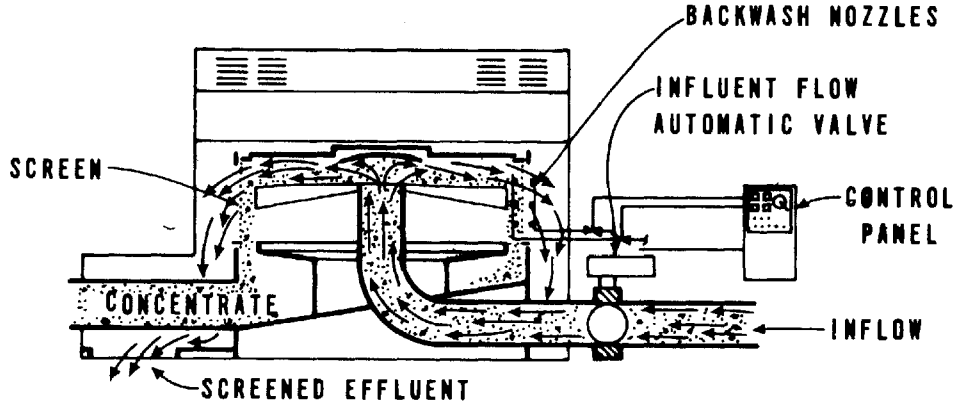

Figure 49. Rotary fine screen schematic [11]

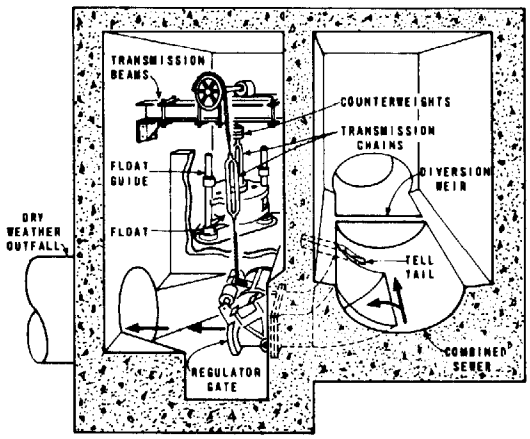

(a) AUTOMATIC SEWER REGULATOR [32]

(BROWN AND BROWN TYPE A).

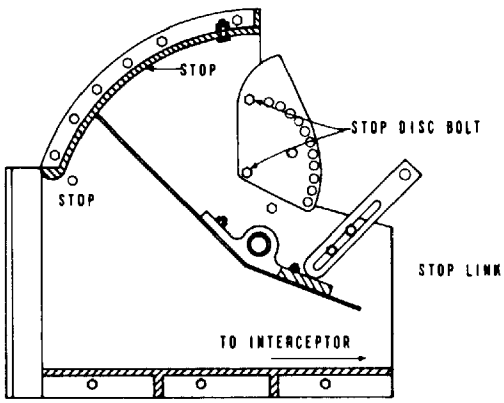

(b) TIPPING GATE REGULATOR [11]

USED BY ALLEGHENY COUNTY SEWAGE AUTHORITY

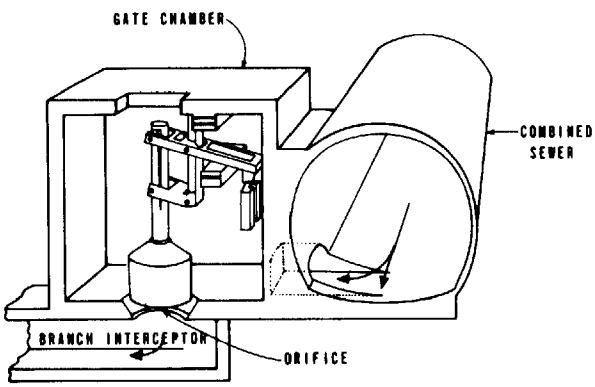

(c) CYLINDRICAL GATE REGULATOR [10]

Figure 24. Typical semiautomatic dynamic sewer regulators

Screen cleaning – In the studies conducted on the rotary fine screen [38, 11], blinding (clogging of the screen) has been a problem. Blinding has been attributed to oil, grease, and industrial waste from a paint manufacturer. This problem is similar to that experienced during the development of microstrainers. The latest study at Shore Acres, California, solved this problem by enforcing an industrial waste ordinance prohibiting discharge of oil wastes to the sewer system.

To improve backwashing, a solution of hot water and liquid solvent or detergent has been found necessary to obtain effective cleaning of the screens. This may have been necessary only because of the nature of the common waste encountered in both studies [38, 11]. Of the solvents tested, acidic and alcoholic agents did not adequately clean the screens. Alkaline agents were reported not effective by Portland [11], but Cornell, Howland, Hayes & Merryfield [38] reported a caustic solution was the most efficient solvent. Chloroform, solvent parts cleaner, soluble pine oil, ZIF, Formula 409, and Vestal Eight offered limited effectiveness. ZEP 9658 cleaned the screens effectively, but this cleaner was not analyzed to determine its effect on effluent water quality. The removal of paint was done effectively only by hand cleaning using ZEP 9658.

Screen life – In the first study [38], the average screen life was approximately 4 hours. In a study conducted a year later [11] using a similar unit incorporating a new screen design and a rotational speed of 65 rpm, the average screen life was 34 hours. Reducing the rotational speed to 55 rpm increased the average screen life to 346 hours. Results of a subsequent study at Shore Acres, California, indicate that screen life may exceed 1 year. This extended life, however, is most likely attributable to the much lower hydraulic loading rate, 39.5 versus 123 l/sec (0.9 versus 2.8 mgd) or 30 versus 97 l/sec/sq m (44 versus 143 gpm/sq ft). The present predicted screen life is 1,000 hours. Some screen failures were attributed to punctures caused by objects present in the feed waters.

Design parameters – The design and operating parameters of the rotary fine screen are presented in Table 45. No mathematical modeling of the rotary fine screen has been performed. Further tests of the rotary fine screen are needed to determine more accurately the life of the screens, the removal efficiencies, and design parameters.

Two points should be remembered with respect to rotary fine screens: (1) waste flows from the rotary fine screen range from 10 to 20 percent of the total flow treated and may contain solvents that may be difficult to treat downstream;

Conventional Designs

Conventional regulators can be subdivided into three major groups: (1) static, (2) semiautomatic dynamic, and (3) automatic dynamic. The grouping reflects the general trend toward the increasing degree of control and sophistication and, of course, the capital and operation and maintenance costs. Conventional regulator design, use, advantages, and disadvantages are well covered in the literature [10, 11, 32].

Static Regulators – Static regulators can be defined as fixed-position devices allowing little or no adjustment after construction.

Static regulators consist of horizontal or vertical fixed orifices, manually operated vertical gates, leaping and side-spill weirs and dams, and self-priming siphons. Typical static regulators are shown on Figure 23. With the exception of the vertical gate, which does not often move, they have no moving parts. Thus, they provide only minimal control, and they are least expensive to build, less costly to operate, and somewhat less troublesome to maintain. In view of the increasingly more stringent receiving water discharge limitations and the rising need of providing stormwater capacity in treatment plants, it is expected that the use of conventional static regulators will decline. System control, to utilize maximum capacity in the interceptor, requires flexibility virtually nonexistent with static regulators. Maintenance, with the exception of the vertical gate, is mostly limited to removal of debris blocking the regulator opening.

Semiautomatic Dynamic Regulators – Semiautomatic dynamic regulators can be defined as those which are adjustable over a limited range of diverted flow and contain moving parts but are not adaptable to remote control.

The family of semiautomatic dynamic (having moving parts) regulators consists of float-operated gates, mechanical tipping gates, and cylindrical gates. Typical semiautomatic dynamic regulators are shown on Figure 24. All require separate chambers to allow access for adjustment and maintenance. As a rule this group is more expensive to construct and to maintain than static regulators. They are more susceptible to malfunction from debris interfering with the moving parts and are subject to failure due to the corrosive environment. However, better flow control is provided because they respond automatically to combined sewer and interceptor flow variations. The adjustment of

than pumping if resuspension in water is to be avoided. This is one of the screening methods currently being tested for combined storm overflows at Fort Wayne, Indiana [28, 43]. The installed units are to handle 767 l/sec (17.5 mgd) using screens with openings of 1,525 microns (0.060 inch).

Advantages and Disadvantages – The four basic screening devices have been developed to serve one of two types of applications. The microstrainer is designed as a main treatment device that can remove most of the suspended contaminants found in a combined sewer overflow. The other three devices--drum screens, rotary fine screens, and hydraulic sieves--are basically pretreatment units designed to remove the coarser material found in waste flows. The advantages and disadvantages of each type are listed in Table 46.

Description of Demonstration Projects

Philadelphia, Pennsylvania – The use of a microstrainer to treat combined sewer overflows has been studied in Philadelphia [26, 27]. The facility includes microstraining and disinfection. The microstrainer was a 5-foot diameter by 3-foot long unit using either 35- or 23-micron screen openings during the various tests conducted. The drum was operated submerged at 2/3 of its depth. The complete unit was equipped to automatically control drum speed proportional to the headloss across the screen, with continuous backwash, and with an ultraviolet irradiation source to prevent fouling of the screen by bacterial slimes. The unit starts automatically whenever sufficient overflow occurs. Because of the physical configuration of the sewer, flow was pumped to the microstrainer. However, it is recommended that pumping be avoided whenever possible since large solids that would be readily removed by microstraining are broken up by the pumping. The study was conducted in three phases: (1) operation of full screen area using the 35 micron screen, (2) operation at full screen area using 23 micron screen, and (3) operation at 20 percent of the screen area using the 23 micron screen. The latter was to test increased loading rates since the facility had a limited pumping capacity. The facilities operated approximately 40 times per year on combined sewer overflows.

Milwaukee and Racine, Wisconsin [40] – The use of fine screens to remove most of the coarse solids at Milwaukee and Racine has been briefly described previously under Dissolved Air Flotation. One unit was used at Milwaukee and six are used at Racine. They operate at a continuous

The unit is set up for fully automatic operation and may be started by any of three external level sensors located 458 meters (1,500 feet) upstream, at the injection site, and 458 meters (1,500 feet) downstream.

Several polymers were tested, and Polyox WSR-301 was chosen to be used when the Bachman Creek unit becomes operational. The polymer is expected to reduce the surcharge by 6.1 meters (20 feet) over the first 1,220-meter (4,000-foot) length. The maximum equipmental feed rate is expected to be 2.3 kg/min (5 lb/min). The actual polymer feed rate will be flow paced by the liquid level in the sewer to maintain a polymer concentration of about 150 ppm in the sanitary sewer. The unit is capable of supplying a dosage of 500 to 600 mg/l if needed. It is expected that the unit will be in operation about five times per year and that surcharge reduction will be complete in approximately 7 minutes after start of polymer injection (travel time in the affected reach of sewer).

The actual construction cost for the unit, including installation of the site, was $146,000 (ENR 2000). The unit was scheduled to be operable by mid-1973 with operational performance and data available one year thereafter. Maintenance is expected to be limited to a site visit and unit exercise every 2 months.

REGULATORS

Historically, combined sewer regulators represent an attempt to intercept all dry-weather flows, yet automatically provide for the bypass of wet-weather flows beyond available treatment/interceptor capacity. Initially, this was accomplished by constructing a low dam (weir) across the combined sewer downstream from a vertical or horizontal orifice as shown on Figure 22. Flows dropping through the orifices were collected by the interceptor and conveyed to the treatment facility (see Figure 19). The dams were designed to divert up to approximately 3 times the average dry-weather flow to the interceptor with the excess overflowing to the receiving water. Eventually more sophisticated mechanical regulators were developed in an attempt to improve control over the diverted volumes. No specific consideration was given to quality control.

Recent research, however, has resulted in several regulators that appear capable of providing both quality and quantity control via induced hydraulic flow patterns that tend to separate and concentrate the solids from the main flow [10, 50, 15]. Other new devices promise excellent quantity control without troublesome sophisticated design.

drum speed with backwashing activation whenever headloss exceeds 6 inches. Collected solids are discharged to the float holding tanks. The screen size used in both cases was 297 microns.

Cleveland, Ohio [22] – The Cleveland, Ohio, study on dual-media filtration also included a fine screen as a pretreatment unit to the filtration process. The 420 micron screen was fitted over a 1.2 sq m (12.6 sq ft) drum unit. Drum speed and backwash conditions were not reported. More details on the layout of the facilities are given in this section under Filtration.

East Providence, Rhode Island [41] – This bench-scale study was conducted to test the applicability of using a drum screen and a diatomaceous earth filter in series to achieve significant removals when operating on combined sewer overflow. The study indicated good removals by the screening device in relation to other drum screens. The screening unit, however, was of different configuration than other drum screens. The device used was a small 259 sq cm (40 sq in.) unit consisting of a submerged rotating drum with the flow passing through the screen from the outside to the inside. Effluent was drawn off from the interior of the rotating drum. The backwash system ran continuously using submerged spray jets directed at the interior of the screen dislodging strained solids and allowing them to pass through ports separating dirty water from the rest of the influent water. Synthetic sewage was used during the study. Screen apertures tested were 150, 190, and 230 microns in size.

Portland, Oregon [38, 11] – A rotary fine screen unit was tested in Portland, Oregon, on both dry-weather flow and combined sewer overflows. The facility was constructed on a 183 cm (72-inch) diameter trunk sewer serving a 10,000-ha (25,000-acre) area. A portion of the flow was diverted to a bypass line where it first flowed through a bar screen before being lifted into the demonstration project by two 132 l/sec (2,100 gpm) turbine pumps. After passing through the rotary fine screen, both the concentrated solids and the effluent were returned to the Sullivan Gulch Pumping Station wet well. In a typical installation on a combined sewer overflow line, the effluent from the screens would pass to a receiving stream after disinfection. The concentrated solids would be returned to an interceptor sewer. The screening unit used a 152 cm (60-inch) diameter drum with 74, 105, and 167 micron screens. The units were operated at flow rates ranging from 43.2 to 126.2 l/sec (1 to 2.8 mgd). The range and levels of variables tested is listed in Table 47.

associated with excess wet-weather flows are generally of short duration; thus, a marginally inadequate line can be bolstered by polymer injections at critical periods. In effect, this increases the overall treatment efficiency by allowing more of the flow to reach the treatment plant, while flooding from sewer surcharges is decreased.

The polymers tested in Richardson, Texas, included Polyox Coagulant-701, Polyox WSR-301, and Separan AP-30 [40]. The latter showed the greatest resistance to shear degradation (which may be important in very long channels) but was the least effective hydraulically. Tests conducted indicated that the polymers and nonsolvents were not detrimental to bacteria growth and therefore would not disrupt the biological treatment of sewage in wastewater treatment plants. Tests conducted on algae in a polymer environment indicated that the polymers have no toxic effects and only nominal nutrient effects. Fish bioassays indicated that in a polymer slurry concentration of 500 mg/l, some fish deaths resulted but that, in practice, concentrations above 250 mg/l would provide no additional flow benefits. It was reported that polymer concentrations of between 35 and 100 mg/l decreased flow resistance sufficiently to eliminate surcharges of more than 1.8 meters (6 feet) [40].

The Dallas Water Utilities District, Dallas, Texas has constructed a prototype polymer injection station (see Figure 21) for relief of surcharge-caused overflows at 15 points along a 2,440-meter (8,000-foot) stretch of the Bachman Creek sewer [36]. During storms, the infiltration ratio approaches 8 to 1. The sanitary sewer is 46 cm (18 inches) in diameter for the first 1,220 meters (4,000 feet) and then joins another 46-cm (18-inch) diameter sewer and continues on. The Dallas polymer injection station was built as a semiportable unit so that it can be removed and installed at other locations needing an interim solution once a permanent solution has been implemented at Bachman Creek.

The polymer injection unit is enclosed by a 1.3-cm (1/2-inch) steel sheet, 3.1 meters (10 feet) in diameter by approximately 7.9 meters (26 feet) in height. The upper half provides storage for 6,364 kg (14,000 lb) of dry polymer and also contains dehumidification equipment. The lower half contains a polymer transfer blower, a polymer hopper and agitator for dry feeding, a volumetric feeder and eductor, and appurtenances. The unit is entirely self-contained with only external power and water hookup necessary for the unit to be in operation.

has eight 152-cm (60-inch) diameter units operating in parallel. They are to be operated sequentially to accommodate flow variation. The screen size is 105 microns. Twelve static screens using 1,525-micron (0.06-inch) clear opening screen represent the third portion of the facility. These are the manufacturer's standard units that have been used in industry to remove gross solids. A description of a typical unit was presented above. The combined sewer overflow facilities are located across the Maumee River from Fort Wayne's sewage treatment plant. Flows entering the facilities are sewage treatment plant bypass and combined sewer overflows. These flows are lifted to the screens by pumps after passing through a bar screen. Chlorination and a contact tank are provided.

Costs

Microstrainers and Drum Screens – The costs reported for microstrainers vary considerably, as shown in Table 48. The main reason is the variation in flux rates or loading coupled with the type of waste treated (i.e., combined sewer overflows versus secondary effluent) [30]. With the exception of the Philadelphia facility, all of the microstrainers are used to treat sewage effluent at appreciably lower flux rates which necessarily increased the cost. During the Philadelphia study it was found possible to use a flux rate of 73.3 cu m/hr/sq m (30 gpm/sq ft); therefore, the costs at the three other locations listed in Table 48 have been modified to reflect this increase in loading rate. According to the figures presented in Table 48, the average capital cost is approximately $248/l/sec ($11,000/mgd) for treating combined sewer overflows. The operation and maintenance costs have not been adjusted. The approximate cost is $0.0013 to $0.0026/1,000 l ($0.005 to $0.01/1,000 gal.) for assuming 300 hours of operation per year. The single capital cost cited for a fine screen is only the equipment cost and does not include installation. Operation and maintenance costs should be comparable to those for microstrainers.

Rotary Fine Screens – Cost data for rotary fine screens for combined sewer overflows are based on a preliminary design estimate for a screening facility in Seattle, Washington, and actual construction costs at Fort Wayne, Indiana [38, 28]. The two costs were $700,000 and $250,000, for plants of 1,095 l/sec (25 mgd) and 1,640 l/sec (37.5 mgd), respectively. The differences in cost are due, in part, to the fact that the Fort Wayne installation is a demonstration prototype project where three types of screens operating in parallel are treating a total flow of 3,285 l/sec (75 mgd) in a single building. The cost for the rotary fine screen

with grades too flat to be self-cleansing. However, such applications are relatively uncommon today. Because of the volume of flow required and the noted system limitations, stormwater applications to date have been limited to relatively small lateral sewers.

Cleansing deposited solids by flushing in combined sewer laterals with mild slopes (0.001 to 0.008) was studied using 30-cm (12-inch) and 46-cm (18-inch) clay sewer pipes, each 244 meters (800 feet) long [22]. Experimental data were then used to formulate a mathematical design model to provide an efficient means of selecting the most economical flushing system that would achieve a desired cleansing efficiency within the constraints set by the engineer and limitations of the design equations.

It was found that the cleansing efficiency of deposited material by periodic flush waves is dependent upon flush volume, flush discharge rate, sewer slope, sewer length, sewer flow rate, and sewer diameter. Neither details of the flush device inlet to the sewer nor slight irregularities in the sewer slope and alignment significantly affected the percent cleaning efficiencies.

Using sewage instead of clean water for flushing was found to cause a general, minor decrease in the efficiency of the cleansing operation. The effect is relatively small and is the result of the redeposition of solids by the trailing edge of the flush wave.

The effects of flush wave sequencing were found to be insignificant as long as the flush releases were made progressively from the upstream end of the sewer. Also, the cleansing efficiencies obtained by using various combinations of flush waves were found to be quite similar to those obtained using single flushes of equivalent volumes and similar release rates. However, both of these hypotheses are based on the limited findings from tests run on relatively short sewers. Therefore, further testing is required to give a complete picture of the relative importance of these two factors on the overall performance of a complete flushing system.

A prototype flush station developed during the study can be inserted in a manhole to provide functions necessary to collect sewage from the sewer, store it in a coated fabric tank, and release the stored sewage as a flush wave upon receipt of an external signal.

One prototype lateral flushing demonstration project was considered for an 11-ha (27-acre) drainage area in Detroit

FILTRATION

Introduction

In the physical treatment processes, filtration is one step finer than screening. Solids are usually removed by one or more of the following removal mechanisms: straining, impingement, settling, and adhesion. Filtration has not been used extensively in wastewater treatment, because of rapid clogging which is principally due to compressible solids being strained out at the surface and lodged within the pores of the filter media. In stormwater runoff, however, a large fraction of the solids are discrete, noncompressible solids that are more readily filtered [30].

Effluents from primary or secondary treatment plants and from physical-chemical treatment facilities contain compressible solids.

The discussion on filters handling discrete, noncompressible solids is presented here.

Design Criteria

Two factors affecting removal efficiency are flux rate and the type of solids. As one would expect, the removals are inversely proportional to the flux rate. At high flux rates, solids are forced through the filters reducing solids removal efficiency. Suspended solids removals were found to be better for inert solids (discrete, noncompressible solids) than for volatile solids (compressible solids). This is the same conclusion found for microstrainers.

Loading Rates – The difference between filtering compressible and noncompressible solids is basically the flux rate used. High-rate filters handling compressible solids are normally loaded at 12.2 to 24.5 cu m/hr/sq m (5 to 10 gpm/sq ft), whereas those handling noncompressible solids will filter at rates up to 73.4 cu m/hr/sq m (30 gpm/sq ft).

Chemicals – Many polyelectrolytes and some coagulants have been tested. Some polyelectrolytes have been found which increase removals of phosphorus and nitrogen. It is cautioned, however, that polyelectrolytes are noted for their unpredictability and the most effective polyelectrolyte must be determined for each wastewater.

Demonstration Projects

Studies have been made to investigate possible filtration techniques for combined sewer overflows. The different

(1) replacement of broken sections, (2) insertion of various types of sleeves or liners, (3) internal sealing of joints and cracks with gels or slurries, and (4) external sealing by soil injection grouting. Additional detailed information is available in recent EPA reports on jointing materials [13, 41, 27] and sealants [29, 13, 41, 25].

The method most commonly used to correct structural defects and infiltration (in sections where major structural damage is not present) is internal sealing with gels or slurries.

The use of a chemical blocking method to seal sewer cracks, breaks, and bad joints is much more economical and feasible than sewer replacement or the inadequate concrete flooding method. With recent improvements in television and photographic inspection methods, sealing by chemical blocking appears to be an even more encouraging method than heretofore. Chemical blocking is accomplished by injecting a chemical grout and catalyst into the crack or break. A sealing packer is used to place the grout and catalyst. The packer has inflatable elements to isolate the leak, an air line for inflation, and two pipes for delivering the chemical grout and catalyst to the packer. An example of a packer is shown on Figure 20. During the repair the two inflatable end sections isolate the leak and chemical grout and catalyst are injected into the center section. Then the center section is inflated to force the grout from the annulus between the packer and the sewer wall into the leak. When the repair is complete, the packer is deflated and moved to the next repair location.

The current use of acrylamid gels as chemical blocking agents is restricted by their lack of strength and other physical limitations. Recently, improved materials, such as epoxy-based and polyurethane-based sealants, have been developed [29]. These new sealants have exhibited suitability even under conditions of erratic or intermittent infiltration where acrylamid gels failed because of repeated dehydration. The only difficulty in applying the new sealant materials has been that, because of the physical properties of the sealants, new application equipment incorporating a mixing mechanism is required. The cost of this new equipment is approximately the same as the existing equipment. Modification of existing packing equipment to accept the new sealants has been found to be feasible.

Sewers may also be sealed by inserting sleeves or liners, as discussed previously.

screen during the overflow event and stored in two 19-cu m (5,000-gal.) tanks for the test filtration runs that followed. Each tank had a mixer to keep solids in suspension. Two pumps were then used to supply the filter with screened water.

Removals for this filter were 65 percent for SS, 40 percent for BOD_5, and 60 percent for COD [22]. The addition of polyelectrolyte increased the SS removal to 94 percent, the BOD_5 removal to 65 percent, and the COD removal to 65 percent. Inorganic coagulants, such as lime, alum, and ferric chloride, did not prove as successful as polymers. Run times averaged 6 hours at loading rates of 58.7 cu m/hr/sq m (24 gpm/sq ft). Backwashing of the filters consisted of alternately injecting air and water into the bottom of the filter columns. Air volume was varied from 38.4 to 283 cu m/hr/sq m (2.1 to 15.5 scfm/sq ft) over 2.5 to 29 minutes. Backwash water volume used ranged from 1.9 to 8.6 percent of the total combined sewer overflow filtered, with a median value of approximately 4 percent. The range of backwash water rate used was 75.8 to 220 cu m/hr/sq m (31 to 90 gpm/sq ft) over 4 to 25 minutes.

A list of the basic design data is presented in Table 50.

Others – Two other filtration processes, fiber glass plug filtration [24] and coal filtration [34], show some promise, but additional research is necessary to perfect them. Other methods, such as crazed resin filtration, upflow filtration with garnet sand, and filtration using ultrasonically cleaned fine screens, have not been successful and are not considered worthy of further effort at the present time.

Advantages and Disadvantages

The advantages of dual-media filtration are that (1) relatively good removals can be achieved; (2) process is versatile enough to be used as an effluent polisher; (3) operation is easily automated; and (4) small land area is necessary. Disadvantages are that (1) costs are high; (2) dissolved materials are not removed; and (3) storage of backwash water is required.

Costs

Cost data were developed from a design estimate for 1.1, 2.2, 4.4, and 8.8 cu m/sec (25, 50, 100, and 200 mgd) filtration plants at a satellite location [22]. The basic plant as envisioned for the cost estimate includes a low lift pump

Identification of the drainage system includes a review of detailed maps of the sewer system; field checks of the line, grade, and sizes; and identification of sections and manholes that are bottlenecks.

To identify the scope of the infiltration, it is necessary to measure and record both dry- and wet-weather flows at key manholes. Groundwater elevations should be obtained simultaneously with sewer flow measurements.

A physical survey of the entire sewer system, or that portion of major concern, where every manhole is entered and sewers are examined visually to observe the degree and nature of deposition, flows, pipe conditions, and manhole condition should be made. Smoke testing may reveal infiltration sources only under low groundwater conditions. If the groundwater table is above the pipe, the smoke may be lost in the water. Soil conditions and groundwater conditions should also be noted.

An economic and feasibility study is necessary to determine the locations where the greatest amount of infiltration can be eliminated for the least expenditure of money. In some cases, it may be most cost effective to provide additional treatment capacity at the sewage treatment plant for the infiltration. Cost estimates can be developed for subsequent correctional stages as necessary.

Cleaning – A systematic program of sewer cleaning (1) can restore the full hydraulic capacity and self-scouring velocity of the sewer and its ability to convey infiltration without flooding; (2) can aid in the discovery of trouble spots, such as areas with possible breaks, offset joints, restrictions, and poor house taps, before any substantial damage is caused; and (3) is a necessary prerequisite to television and photographic inspection. It is one of the most important and useful forms of preventive maintenance. This type of program involves periodic cleaning on a regular, recurring basis.

By frequent hydraulic flushing of the sewers, the interval between mechanical cleanings of the sewer can be extended. This will be discussed in more detail later in this section.

Equipment used in cleaning falls into three general classifications: (1) rodding machines, (2) bucket machines, and (3) for small sewers, hydraulic devices. The rodding machine, which is used most commonly, removes heavy conglomerations of grease and root intrusions. The bucket machine utilizes two cables threaded between manholes. One cable

Plant capacity		Capital cost, $	Operation and maintenance cost, $/yr
cu m/sec	mgd		
1.1	25	1,580,000	44,000
2.2	50	2,390,000	55,000
4.4	100	4,370,000	98,000
8.8	200	7,430,000	129,000

The cost data are based on an ENR of 2000.

The operating costs are estimated to be $0.0382/1,000 l ($0.141/1,000 gal.) for 300 hours of operating per year. The high cost could easily be reduced, however, by designing the system to serve also as a dry-weather effluent polisher during periods with no storm flows.

CONCENTRATION DEVICES

Concentration devices, such as the swirl regulator/concentrator and helical or spiral flow devices, have introduced an advanced form of sewer regulator--one capable of controlling both quantity and quality. These devices have been previously described in Section VIII. A prototype swirl regulator has recently been constructed in Syracuse, New York. A second generation swirl concentrator has been placed into operation as a treatment unit for municipal sewage grit separation in Denver, Colorado. Settleable solids removals ranging from 65 to more than 90 percent, corresponding to chamber retention times of approximately 5 to 15 seconds, have been predicted on the basis of hydraulic model tests. At the time of writing, no operational data were available. Indicated costs are approximately $285/cu m/sec ($6,500/mgd). A third generation swirl device has been developed to take the place of conventional primary sedimentation at 10 to 20 minute detention times.

include the maximum infiltration anticipated during the life of the sewer, while the construction allowance should be the maximum allowable infiltration at the time of construction. The construction infiltration will increase continuously throughout the life of the project. APWA has recommended the establishment of a construction infiltration allowance of 185 l/cm diameter/km/day (200 gal./inch diameter/mile/day) or less. This is not unreasonable in light of improvements in pipe and joint materials and construction methods.

Average and peak design flows should be related to the actual conditions for the area under design. Too often flow criteria are taken from a standard textbook. Adequate subsurface investigations should be undertaken to establish conditions that may affect pipe and joint selection or bedding requirements. Consideration should be given to the constructability and maintainability of the sewer system. This calls for direct communication between the designer and maintenance personnel.

Manholes should be designed with as few construction joints as possible. In recent years the development of custom-made precast manholes with pipe stubs already cast in place has reduced the problem of shearing and damage of connecting pipes. The use of flexible connectors at all joints adjacent to manholes reduces the possibility of differential settlement shearing the connecting pipes.

Manhole cover design is attracting serious attention in view of evidence that even small perforations can produce sizable contributions of extraneous inflow. A single 2.5-cm (1-inch) hole in a manhole top covered with 15.2 cm (6 inches) of water may admit 0.5 l/sec (11,520 gpd) [41]. Solid sealed covers should be used for manholes in areas subject to flooding. If solid covers are used, alternative venting methods must be used to admit air or remove sewer gases.

Construction considerations — The most critical factor relative to infiltration prevention is the act of construction. The capability of currently manufactured pipes and joints to be assembled allowing minimal infiltration must be coupled with good workmanship and adequate inspection, expecially at house connections.

Trenches should be made as narrow as possible but wide enough to permit proper laying of pipe, inspection of joints, and consolidation of backfill. Construction should be accomplished in dry conditions. If water is encountered

Operationally and from a design standpoint, the aforementioned factors are taken into account by considering (1) the food-to-microorganism ratio, (2) the sludge retention time, and (3) the hydraulic detention time.

The food-to-microorganism ratio is defined as the kilograms of BOD_5 (food) applied per unit time (often taken as the amount consumed) per kilogram of organisms in the system. The sludge age is defined by the kilograms of organisms wasted per day. The hydraulic detention time is defined as the value, given in units of time, obtained by dividing the volume of the reaction vessel by the flow rate.

Because the food-to-microorganism ratio and the sludge retention times are interrelated [17], both are commonly used in the design of biological systems. From field observations and laboratory studies, it has been found that as the sludge age is increased and, correspondingly, the food-to-microorganism ratio decreased, the settling characteristics of the organisms in the system are enhanced, and they can be removed easily by gravity settling. Typical values for the food-to-microorganism ratio and sludge age are given in reference [17].

As previously noted, the length of time the biomass is in contact with the waste BOD_5 is measured by the hydraulic detention time. The minimum time to achieve a given removal is dependent upon the food-to-microorganism ratio. Low ratios (i.e., a high number of bacteria per kilogram of BOD_5) allow faster utilization of a given amount of BOD_5. The minimum time required may vary considerably, from 10 to 15 minutes in contact stabilization, or less for trickling filters and rotating biological contactors, and up to 2 to 3 days for oxidation ponds. At the shorter contact times, the biomass only removes the dissolved matter and possibly some of the smaller colloidal matter [15]. At longer contact times, suspended organic matter is utilized.

In any biological system, these factors control the process. A mathematical model has been developed for the activated sludge system [17, 14]. Models for trickling filters, rotating biological contactors, and treatment lagoons have not been formulated. Empirical designs and design parameters are used instead.

APPLICATION TO COMBINED SEWER OVERFLOW TREATMENT

Biological treatment of wastewater, used primarily for domestic and industrial flows of organic nature, produces an effluent of high quality and is generally the least costly

made of natural rubber, synthetic rubber, or various other elastomers. These joints are used on asbestos cement pipe, cast iron pipe, concrete pipe, vitrified clay pipe, and certain types of plastic pipes. Compression gasket joints are most effective against infiltration while still providing for deflection of the pipe.

Chemical weld joints – Chemical weld joints are used to join certain types of plastic pipes and glass fiber pipes. The joints provide a watertight seal. It has been reported that, on the basis of field tests, jointing under wet or difficult-to-see conditions does not lend itself to precise and careful workmanship. Thus special care is necessary in preparing these joints in the field. More experience with these pipes in sewer applications is necessary to determine the longevity of this type of joint.

Heat shrinkable tubing – A new type of joint developed recently is the heat shrinkable tubing (HST) [27]. The HST material begins as an ordinary plastic or rubber compound which is then extruded into sections of tubing. The tubing is then heated and stretched in diameter but not in length. After cooling it retains the expanded diameter. If a length of 8-inch diameter tubing is expanded to 16 inches, it will conform to any shape between 8 and 16 inches when reheated. This characteristic gives the HST the ability to form a tight fit around sewer pipe joints.

The material recommended for HST joints is a polyolefin which has a high degree of chemical resistance and the ability to resist scorching and burning, and is both economical and easy to apply. To further assure HST joint strength and resistance to internal pressure, a hot melt adhesive is recommended as an inner surface sealant. The adhesive material has a melting temperature close to that of the HST and will bind the tubing and pipe materials together as the tubing cools to its final shape. Both propane torches and catalytic heaters can be used as the heat source.

Physical properties of the HST reportedly were better than those of currently used joint materials:

> The coupling of commercial sewer pipe, both butt-end and bell and spigot, with watertight joints using heat shrinkable plastic tubing is feasible and economically practical. Used in conjunction with a hot melt adhesive it can surpass in physical and chemical strength any of the conventional joints presently being used with clay, concrete, and asbestos-cement nonpressure sewer pipe. [27]

3. Shakedown runs are necessary to keep the units and the usual large number of automatic controls in operating order.

CONTACT STABILIZATION

Description of the Process

Contact stabilization is considered in lieu of other activated sludge process modifications for treating combined sewer overflows, because it requires less tank volume to provide essentially the same effluent quality. The overflow is mixed with returned activated sludge in an aerated contact basin for approximately 20 minutes at the design flow. Following the contact period, the activated sludge is settled in a clarifier. The concentrated sludge then flows to a stabilization basin where it is aerated for several hours. During this period, the organics from the overflow are utilized in growth and respiration and, as a result, become "stabilized." The stabilized sludge is then returned to the contact basin to be mixed with the incoming overflow. A schematic of a contact stabilization plant for treating combined sewer overflows is shown on Figure 50.

Demonstration Project, Kenosha, Wisconsin

A project sponsored by the EPA to evaluate the use of contact stabilization for treatment of combined sewer overflows from a 486-ha (1,200-acre) tributary area is presently underway at Kenosha, Wisconsin [23, 19]. It is an example of how contact stabilization can be used to treat combined sewer overflows using the waste activated sludge from a dry-weather activated sludge plant. At the Kenosha municipal sewage treatment plant, a 101-l/sec (23-mgd) facility, a new combined sewer overflow treatment facility was constructed. This facility consists of an aeration tank, a contact stabilization tank, and a new clarifier. The design capacity of the new facility is 88 l/sec (20 mgd). The stabilization tank, acting as the biosolids reservoir, receives the waste activated sludge from the main plant. This sludge is held for up to 7 days before final wasting. Thus, stabilized activated sludge is kept in reserve ready to treat combined sewer overflows when they occur. Photographs of the facility are shown on Figure 51.

Operation of the contact stabilization plant consists of directing the combined sewer overflow to the contact tank following comminution and grit removal, adding the reserve activated sludge, and then conducting the waste flows to a final clarifier for separation of the biosolids and other

Choice of sewer pipe — Improvements in pipe materials assure the designer's ability to provide proper materials to meet any rational infiltration allowances he wishes to specify. The upgrading of pipe manufacture to meet rigid quality standards and specifications has eliminated the basic question of watertightness of pipe material. The important issues to consider in pipe material selection are structural integrity, strength of the wastewater character, and local soil or gradient conditions. Combinations of these factors may make one material better suited than another or preferable under certain special installation conditions. In such situations, pipe materials are often chosen for reasons other than their relative resistance to infiltration. The cost of the pipe is usually a small part of the total project cost. For rough estimating purposes, the cost of installed sewer pipes (excluding manholes, laterals and connections, appurtenances, etc.) ranges from $0.97 to $1.55 per cm diameter per linear meter ($1.25 to $2.00 per inch diameter per linear foot).

Materials commonly used for sewer pipe construction include (1) asbestos cement, (2) bituminous coated corrugated metal, (3) brick, (4) cast iron or ductile iron, (5) concrete (monolithic or plain), (6) plastic (including glass fiber reinforced plastic, polyvinylchloride, ABS, and polyethylene), (7) reinforced concrete, (8) steel, (9) vitrified clay, and (10) aluminum. All of these materials, with the possible exceptions of the plastics and aluminum, have been used in sewer construction for many years.

Since sewer pipe made from the plastic materials is relatively new, a brief description of the use of plastic pipes is included below.

Solid wall plastic pipe usually refers to materials such as polyvinylchloride (PVC), chlorinated polyvinylchloride (CPVC), polyvinyldichloride (PVDC), and polyethylene. These materials are lightweight, have high tensile strength, have excellent chemical resistance, and can be joined by solvent welding, fusion welding, or threading. The PVC is probably the most commonly used plastic pipe because it is stronger and more rigid than most of the other thermoplastics; however, PVC is available only in diameters up to 30.5 cm (12 inches).

Polyethylene pipe is finding major use as a liner for deteriorated existing sewer lines [26]. Several lengths of polyethylene pipe can be joined by fusion welding into a long, flexible tube. This tube is then pulled into the existing sewer. When the existing house laterals have been connected to this new pipe liner, the result is a watertight

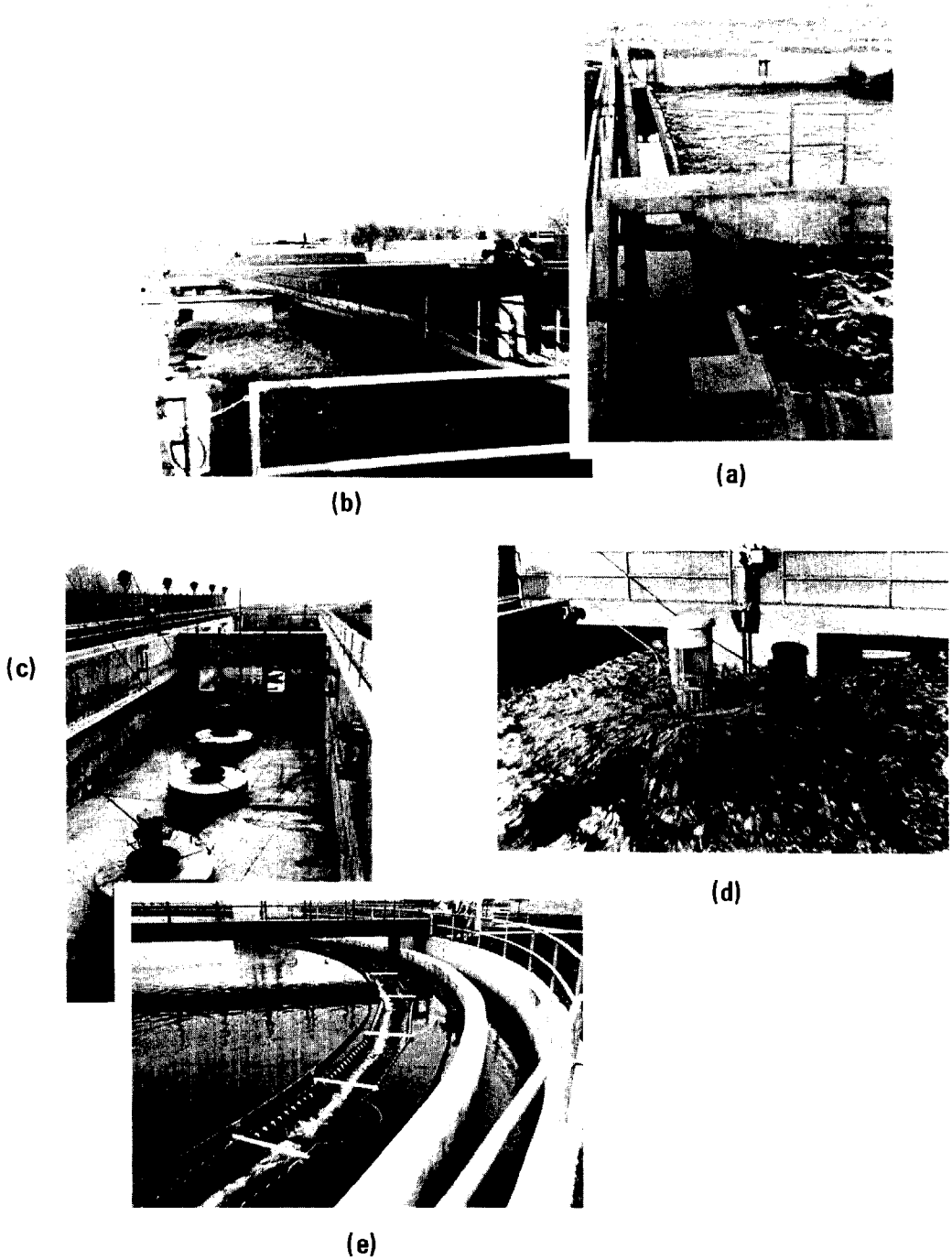

Figure 51. Combined sewer overflow treatment by contact stabilization (Kenosha)

(a) Contact tank with diffused air (b) Sludge stabilization tanks with floating aerators (c) Floating aerator anchoring and counterweight details (d) Closeup of aerator operation (e) Final contact tank (peripherally fed) and effluent

INFILTRATION/INFLOW CONTROL

A serious problem results from (1) excessive infiltration into sewers from groundwater sources and (2) high inflow rates into sewer systems through direct connections from sources other than those which the sewers are intended to serve. Inflow does not include, and is distinguished from, infiltration. The sources and control of infiltration and inflow are discussed in this subsection.

Sources

Infiltration is the volume of groundwater entering sewers and building sewer connections from the soil through defective joints, broken, cracked, or eroded pipe, improper connections, manhole walls, etc. Inflow is the volume of any kind of water discharged into sewer lines from such sources as roof leaders, cellar and yard drains, foundation drains, commercial and industrial so-called "clean water" discharges, drains from springs and swampy areas, depressed manhole covers, cross connections, etc.

Inflow sources generally represent a deliberate connection of a drain line to a sewerage system. These connections may be authorized and permitted; or they may be illicit connections made for the convenience of property owners and for the solution of on-property problems, without consideration of their effects on public sewer systems.

The intrusion of these waters takes up flow capacity in the sewers. Especially in the relatively small sanitary sewers, these waters may cause flooding of street and road areas and backflooding into properties. This flooding constitutes a health hazard. Thus these sanitary sewers actually function as combined sewers, and the resulting flooding becomes a form of combined sewer overflow.

The two types of extraneous water, inflow and infiltration, which intrude into sewers do not differ significantly in quality, except for the pollutants unavoidably or deliberately introduced into waters by commercial-industrial operations [13]. Foundation inflow, for example, does not vary greatly from the kind of water that infiltrates sewer lines from groundwater sources. Basement drainage may carry wastes and debris originating in homes, including laundry wastewater.

Inflow Control

Correction of inflow conditions is dependent on regulatory action on the part of city officials, rather than on public

ratio, and detention times in the contact and stabilization tanks [17, 24, 15, 14]. In the work at Kenosha, however, it has not been possible to show any correlation between removals and these items, although it has been shown that operation based on an assumed uniform influent BOD_5 is sufficient for good BOD_5 and SS removals (80 and 90 percent, respectively).

Operating Parameters – With contact stabilization or any other activated sludge process, operation is normally based on the food-to-microorganism ratio or sludge retention time. Because of this, difficulties may be encountered when using an activated sludge process for treating a rapidly varying and intermittent flow. The sludge retention time is particularly difficult to control because overflows may not last long enough for the plant to stabilize and for proper wasting procedures to be instituted. Operating the plant on stored overflows could reduce this problem The food-to-microorganism ratio, which is interrelated to the sludge age, can be used to control the operation of the plant; however, it too is difficult to control since the concentration of both the incoming BOD_5 and the biological solids in the system must be known. This is further complicated because the BOD_5 concentration in the combined sewer overflow may vary significantly. Based on the results at Kenosha, it has been found that exact control is not necessary for good operation.

The operating parameters used for the contact stabilization plant at Kenosha are shown in Table 52. The values reported are averages, and the range was generally within ±60 percent of the value listed. For comparison, the design parameters for sewage treatment by contact stabilization found in the literature are also presented.

For units such as that at Kenosha, sophisticated design may not be warranted because the system is operated for such short periods that the biosolids and the kinetics of the system do not have a chance to adjust to the incoming flow before the storm is over. In this case, using the reported design equations should be sufficient. Abatement plans that include a contact stabilization process for the treatment of stored overflows for periods of time greater than 5 to 10 days may warrant more sophisticated design to achieve higher removal efficiencies. The use of the kinetic equations describing the metabolism of the bacteria, as formulated by McCarty [14], Metcalf & Eddy [17], and others, may prove useful under such circumstances.

Results of Operational Tests – The work at Kenosha has not been able to show any adverse condition that affects removals. Based on the results of 23 storms studied, the

overall because of external power requirements; (4) no land acquisition is necessary; (5) receiving water pollution loads can be reduced by 50 percent (according to independent studies [49, 30]); and (6) little increase in manpower is required.

Disadvantages of gravity systems may be divided into three categories: nonquantifiable, separation effectiveness, and costs. Nonquantifiable disadvantages, which based on past experience are the most important, are that (1) considerable work is involved in in-house plumbing separation; (2) there are business losses during construction; (3) traffic is disrupted; (4) political and jurisdictional disputes must be resolved; (5) extensive policing is necessary to ensure complete and total separation; and (6) considerable time is required for completion (e.g., in 1957 separation in Washington, D.C., was estimated to take until sometime after the year 2000 to complete) [24]. Separation effectiveness disadvantages are as follows: (1) there is only a partial reduction of the pollutional effects of combined sewer overflows [30]; (2) urban area stormwater runoff contains significant contaminants [7, 4]; and (3) it is difficult to protect storm sewers from sanitary connections (either authorized or unauthorized). Estimated costs for gravity sewer separation are shown for various cities in Table 26.

The cost disadvantages of separation, when compared to some conceptive alternative solutions, are indicated in Table 27. Again, the major reason for the higher costs of sewer separation are in-house plumbing changes which can be as high as 82 percent of the total sewer separation costs [12].

Conclusions

On the basis of currently available information, it appears that sewer separation of existing combined sewer systems is not a practical and economical solution for combined sewer overflow pollution abatement. Several cited alternatives listed in Table 27 suggest other solutions, most of which are considerably less expensive and should give better results with respect to receiving water pollution abatement. In addition, storm sewer discharges may not be allowed at all in the future, thus forcing collection and treatment of all sewage and stormwater prior to discharge. In this case, the argument for either separate or combined sewers is moot.

The choice between sewer separation and other alternatives will be controlled by the uniqueness of each situation. The examples cited in Table 27 leave no doubt that any alternative to sewer separation is the better choice. However,

Advantages and Disadvantages

Some advantages of the contact stabilization process for the treatment of excess (combined sewer) flows in this application are: (1) high degree of treatment; (2) central location of maintenance personnel and equipment; and (3) reduction of the loadings on dry-weather facilities, by dual use of facilities, during normal operations and emergency shutdown of the main plant, making the whole very versatile. Contact stabilization shows definite promise as a method for treating combined sewer overflows when used in combination with a dry-weather activated sludge treatment plant. Disadvantages are: (1) high initial cost, (2) the facilities must be located next to a dry-weather activated sludge plant, (3) adequate interceptor capacity must exist to convey the storm flow to the treatment plant, and (4) expansion of major interceptors may be required.

TRICKLING FILTERS

Description of Process

Trickling filters are widely employed for the biological treatment of municipal sewage. The filter is usually a shallow, circular tank of large diameter filled with crushed stone, drain rock, or other similar media. Settled sewage is applied intermittently or continuously over the top surface of the filter by means of a rotating distributor and is collected and discharged at the bottom. Aerobic conditions are maintained by a flow of air through the filter bed induced by the difference in specific weights of the atmosphere inside and outside the bed.

The term "filter" is a misnomer, because the removal of organic material is not accomplished with a filtering or straining operation. Removal is the result of an adsorption process occurring at the surface of biological slimes covering the filter media.

Classification – Trickling filters are classified by hydraulic or organic loading. Until recently, there were only two flow classifications: low rate and high rate. A third classification, ultrahigh rate, has been added since the advent of plastic medium filters. Although the distinctions are based on hydraulic loading, they are centered in reality around the organic loading that the filter can handle. A comparison of the three classifications of trickling filters is presented in Table 53.

The type of medium used varies considerably. Rock, slag, hard coal, redwood slats, and corrugated plastic have been used. Rock, slag, and hard coal have relatively low surface

(50 million persons) was served in whole or in part by combined sewer systems [42]. Furthermore, it was reported that there were 14,212 overflows in the total 641 jurisdictions surveyed; of these, 9,860 combined sewer overflows were reported from 493 jurisdictions. Until 1967, the most common remedial method reported was sewer separation, and of 274 jurisdictions with plans for corrective facilities construction, 222 indicated that some degree of sewer separation would be undertaken.

Detailed Analysis

Sewer separation will continue to be used to some degree in the future and thus an investigation of the methods, their advantages and disadvantages, and their costs is warranted. There are three categories of sewer separation systems: pressure, vacuum, and gravity.

The most comprehensive study of the pressure or "sewer within a sewer" concept was published by the ASCE [12] in 1969. The greatest disadvantage of pressure systems is generally higher costs, as shown in a comparison of pressure and gravity system costs in the cities of Boston, Milwaukee, and San Francisco presented in Table 26. The ratios of pressure to gravity costs are 1.4, 1.5, and 1.5, respectively. The in-sewer pressure lines varied from 6.3 to 40.6 cm (2-1/2 to 16 inches) in diameter and pressure control valves limited the line pressure to 2.11 kg/sq cm (30 psi). A major portion of the costs is the "in-house separation" which can be as high as 82 percent of the total cost for separation using a pressure system [12]. Besides the high costs, other disadvantages of pressure systems are that (1) they are difficult to maintain; (2) they require complex controls; and (3) they are dependent on electricity for operation. It is important to realize that approximately 72 percent of all combined sewers are less than 0.61 meters (2.0 feet) in diameter, making it difficult to install the pressure pipe.

The advantages are that (1) as an alternative, they provide an additional degree of latitude in sewer design, (2) there is minimal construction interference to commerce and traffic, and (3) they are handy in low areas.

Sewer separation of existing combined sewers has historically been accomplished by utilizing gravity systems. The advantages of gravity sewer separation are that (1) all sanitary sewage is treated prior to discharge; (2) treatment plants operate more efficiently under the relatively stable sanitary flows; (3) other alternatives are less reliable

area per unit volume and are quite heavy, thus limiting the depth of filter. Redwood slats and corrugated plastic are much lighter and can be constructed with a larger surface area per unit volume.

Operation – The operation of most high-rate and ultrahigh-rate trickling filters is in series with a second or third filter and/or with recirculation. The purpose is to provide high removals by increasing the contact time of the waste with the biomass attached to the filter material. When operating alone without recirculation, trickling filters used for treating domestic wastes remove between 50 and 75 percent of the BOD_5.

Under storm conditions, the trickling filter must handle highly varying flows. Applying a varying organic load to a filter does not produce optimum removals. It is generally thought that only sufficient biomass adheres to the supporting medium to handle the normal organic load. As the loading increases above this level, the maximum BOD_5 utilization rate of the biomass is reached. This is not a sharp distinction because some excess biomass always adheres to the medium and can accept some of the organic load.

A varying hydraulic load also affects removals. The increased shearing action of high flows causes excess sloughing or washing off of the biomass. To help dampen this effect, filters operating in series under dry-weather conditions can be operated in parallel, thereby reducing some of the increased hydraulic load on each filter. A maximum overall flow variation (maximum/minimum) of 8 to 10 is acceptable while still achieving significant removals [20].

Design – Trickling filter design has been based primarily on empirical formulas. This does not imply that the basic biological kinetics are not operative; rather, it means that mathematical description of the process has not been formulated. There are several design equations in the literature that may be used for the design of trickling filters [17, 6]. In designing a trickling filter to treat overflows, it must be remembered that dry-weather flow is needed to keep the biomass active between storms. Generally, two or more units should be used to provide high removals by operating in series during dry weather and in parallel during storm events to accommodate the flow variation needed.

Demonstration Project, New Providence, New Jersey

Trickling filters have been used extensively throughout the United States to treat domestic flows, but only one facility (at New Providence, New Jersey) has been designed to treat

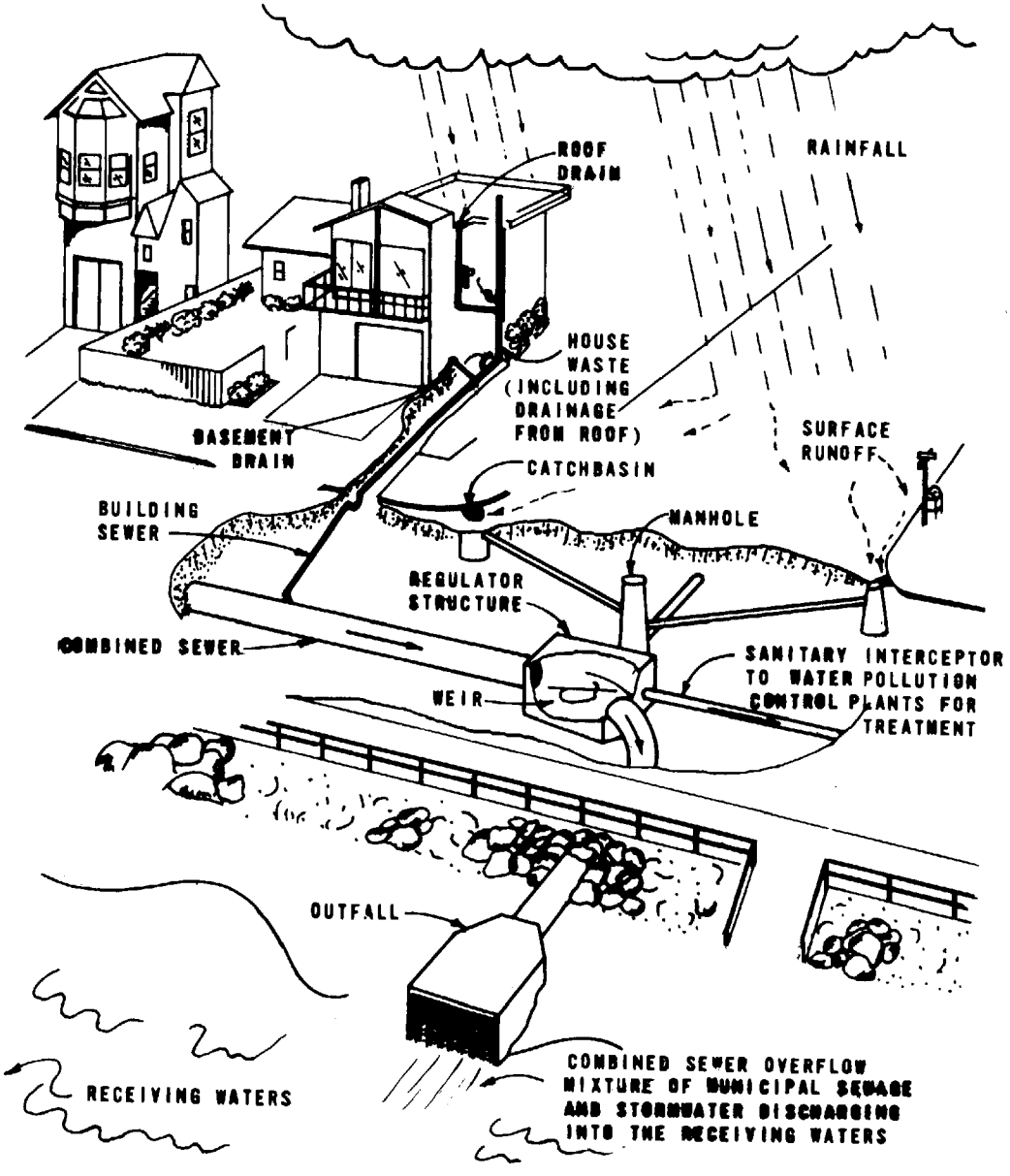

Figure 19. Common elements of an interceptor and transport system [6]

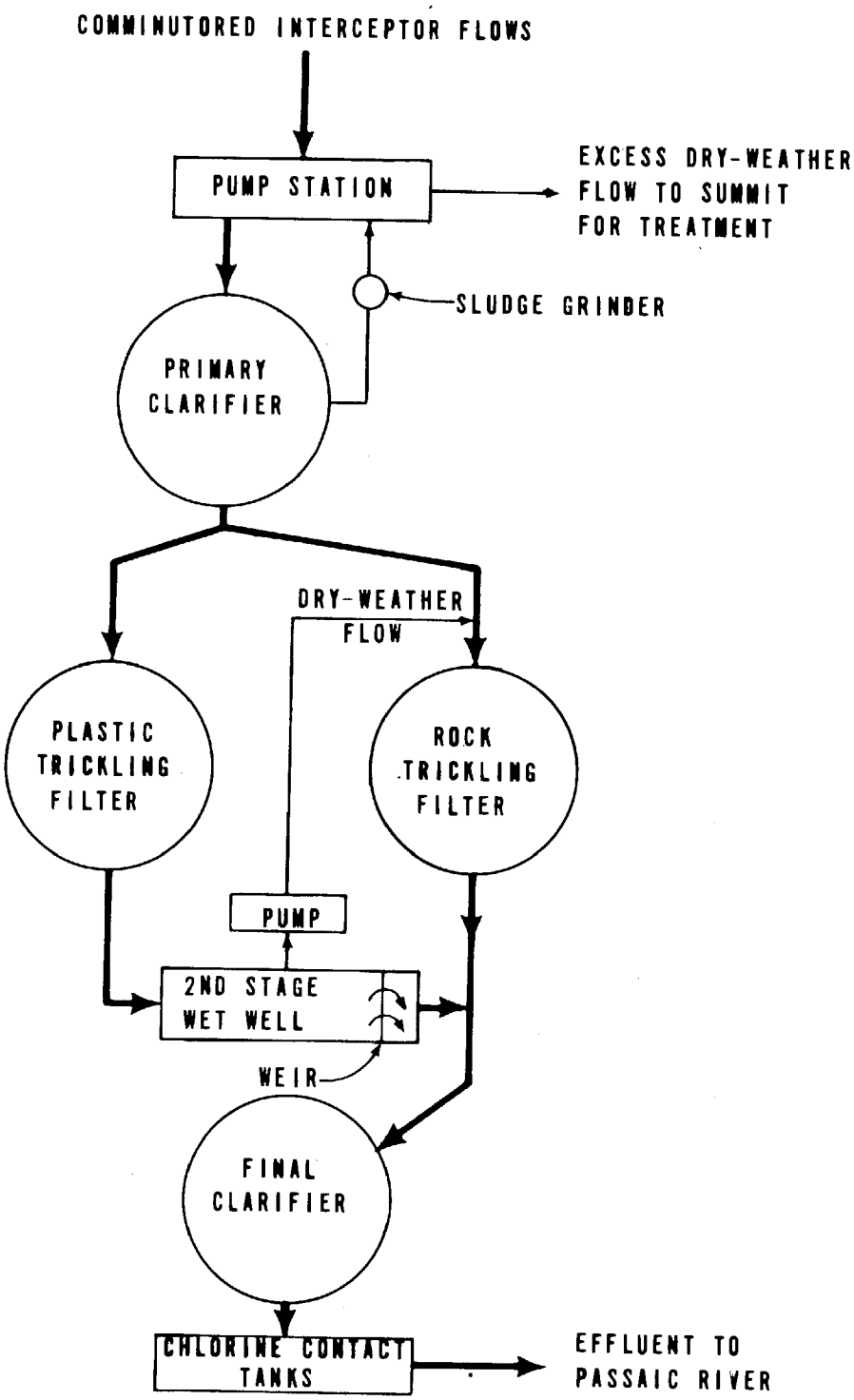

Figure 52. Trickling filter plant schematic, New Providence, N.J.

recharge of groundwater. Erosion control measures in construction areas will minimize the increased solids loadings in runoff from such areas.

4. Drainage pipes and other flood control structures will be used only where the natural system is inadequate, such as at high density urban activity centers. Plans presently call for the use of porous pavements to reduce runoff from streets.

5. Control will be exercised over the type and amount of fertilizers, pesticides, and herbicides to minimize pollution of the runoff.

It has been estimated that the drainage system will cost an average of $243/ha ($600/acre), compared with perhaps $486/ha ($1,200/acre) for a conventional system [2].

Table 54. TRICKLING FILTER REMOVALS [20] NEW PROVIDENCE, NEW JERSEY

Condition	Average treated flow, mgd	Recirculation rate, mgd	BOD				SS			
			Trickling filters			Overall[a] removal, %	Trickling filters			Overall[a] removal, %
			Influent, mg/l	Effluent, mg/l	Removal, %		Influent, mg/l	Effluent, mg/l	Removal, %	
Dry weather flow										
First year	0.54	0.8	104	23	78	86	86	20	77	87
Part of second year	0.56	--	--	9	--	94	--	12	--	93
Wet weather flow										
First year	3.96[b]	0.to 0.8	86	39	53	64	64	36	42	67
Part of second year	1.72[c]	--	--	17	--	87	--	20	--	86

a. Includes removals by primary sedimentation.

b. Average wet weather flow; average peak flows were 6.0 mgd with no recirculation.

c. Wet weather flow rate was reduced by approximately 1.5 mgd by pumping to another treatment plant.

Note: mgd x 43.8 = l/sec

In comparing the plastic medium and the rock filter, it was noted that up to 2-1/2 times the BOD_5 removal per unit volume was possible with the plastic medium. Also, on a capital cost basis, the plastic medium outperformed the rock by 2 to 1 ($/kg BOD_5 removed/1,000 cu m).

Design Parameters – The average hydraulic and organic loadings applied to the New Providence facilities are slightly above the recommended design values. The recommended values are:

	Plastic Medium	Rock
Hydraulic loading	2.73 cu m/hr/sq m (70 mgad)	0.78 cu m/hr/sq m (20 mgad)
Organic loading	1.36 kg BOD_5/day cu m (85 lb BOD_5/day/1,000 cf or 3,700 lb BOD_5/acre-ft/day)	0.64 kg BOD_5/day/cu m (40 lb BOD_5/day/1,000 cf or 1,742 lb BOD_5/acre-ft/day)

Additional design parameters were included previously in Table 53.

Advantages and Disadvantages

Advantages of trickling filters include: (1) they handle varying hydraulic and organic loads, (2) are simple to operate, (3) have ability to withstand shockloads, and (4) have

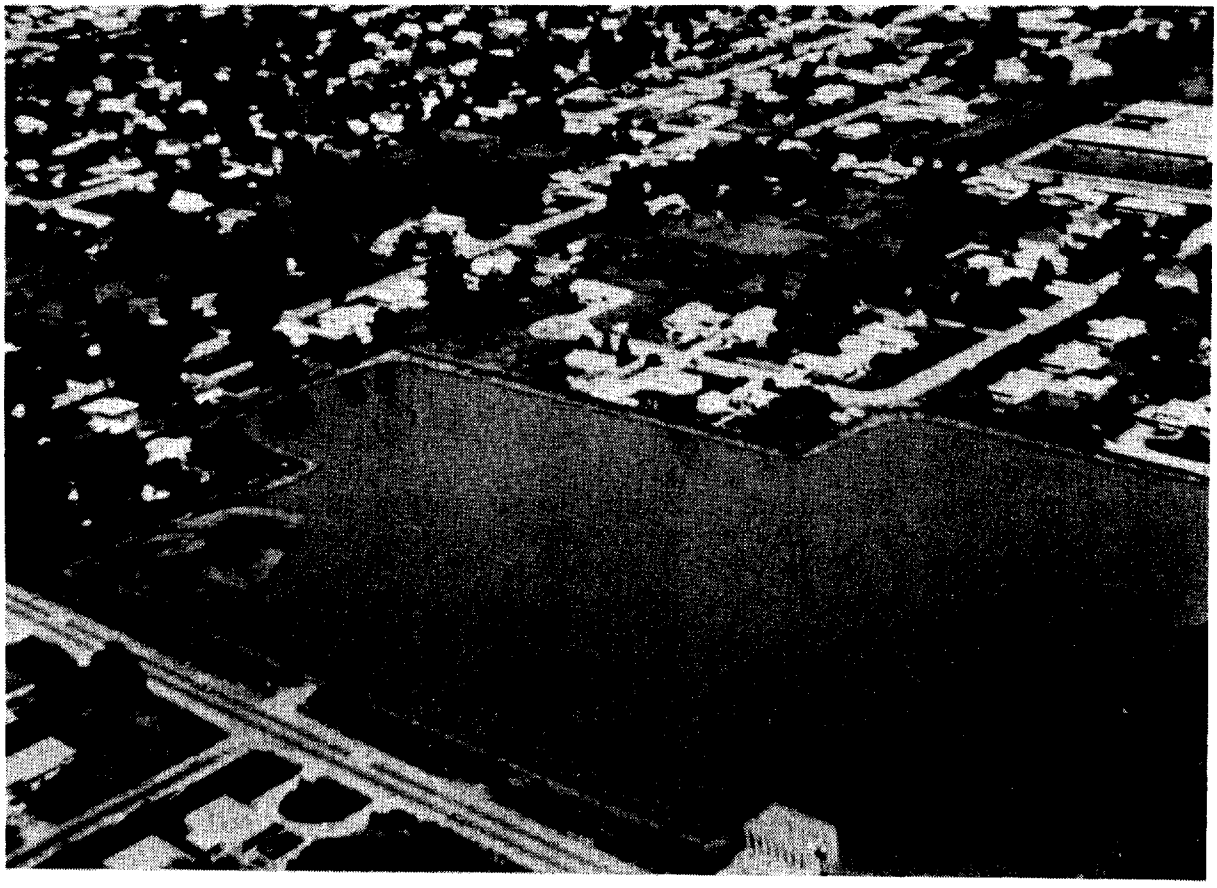

Figure 18. Stormwater surface detention pond (Chicago)

The rotating discs are partially submerged and baffles are used between each shaft-disc unit to prevent short-circuiting. The waste flow enters the contact tank at one end and is allowed to flow either perpendicular to or parallel to one or more units for treatment. The removal of organic matter from the waste flow, either municipal sewage or combined sewer overflow, is accomplished by adsorption of the organic matter at the surface of the biological growth covering the rotating discs. Rotational shearing forces cause sloughing of excess biomass. Secondary clarification should follow the rotating biological contactor treatment to remove sloughed biomass.

As in all biological systems, because microorganisms have a maximum metabolism rate, only a given amount of substrate can be removed with a given amount of biomass. Although this is true generally in the rotating biological contactor, excess biomass can be held on the disc and can effectively act as a reserve for use at higher loadings. The effectiveness, however, is somewhat limited by the oxygen transfer rate and the substrate diffusion gradient through the layer of biomass on each disc. This is similar to what happens in trickling filters. In general, though, the reserve biomass reduces the importance of maintaining a uniform loading rate.

Efficiency

The reported BOD_5 removal efficiencies range from 60 to 95 percent [7, 2, 3, 26]. The higher values are for more recent installations treating dry-weather flow. Suspended solids removals are also in this range. Removals for settleable solids, nitrogen, and phosphorus have been reported to be 80 to 90, 40, and 50 percent, respectively. When treating combined sewage flows, controlled treatment (70 percent or better COD removal efficiency) was reportedly maintained up to 8 to 10 times dry-weather flow [7]. A linear reduction in COD removal efficiency from 70 down to 20 percent was reported for the flow range from 10 to 30 times dry-weather flow.

Operational Considerations

Conditions noted to affect the BOD_5 and COD removals in a rotating biological contactor are (1) organic loading rate, (2) contact time, (3) effluent settling, (4) the number of units in series, and (5) high flow rates. The most important condition is high flow rates which affects the first three of the conditions just enumerated. The maximum allowable variation in flow is approximately 10 times the base

dry-weather flow without excessive sloughing of the biomass from the discs, and to retain good BOD_5 and SS removals, it may have to be much less [7].

Large increases in flow rates, at least up to tenfold, can be tolerated, with removals of about 60 percent if the detention times are 30 minutes or greater during the higher flow [2]. This is shown in Table 55. Continuous operation under this condition eventually affects removal rates. In a study by Marki, as reported by Antonie, it was noted that the system took 1 day to return to steady-state removal efficiency after being operated at high hydraulic loadings [2]. The same conclusion was also reached at Milwaukee [5].

Contact times (hydraulic detention times) significantly affected removals. Generally, the longer the contact time, the higher the removals. Contact times of less than 15 to 30 minutes result in removal efficiencies of less than 60 to 70 percent. The results of several studies on this subject are shown on Figure 55.

Another important aspect is that a continuous base flow is required to keep the biomass alive between storms. Therefore, either the unit is used as the dry-weather facility, as an auxiliary dry-weather facility, or it is placed upstream of the main plant to treat domestic flows from a nearby interceptor during dry weather and storm flows in wet weather.

Table 55. ROTATING BIOLOGICAL CONTACTORS--VARIATION IN REMOVALS RESULTING FROM FLOW INCREASES OF 10 TIMES DUE TO WET WEATHER [2]

	Condition A		Condition B	
Type of operation	Residence time, min	BOD_5 reduction, %	Residence time, min	BOD_5 reduction, %
Steady state	120	92.5	300	94.6
For 8 hr/wk	12	46.9	30	65.0
Following day	120	85.2	300	77.6

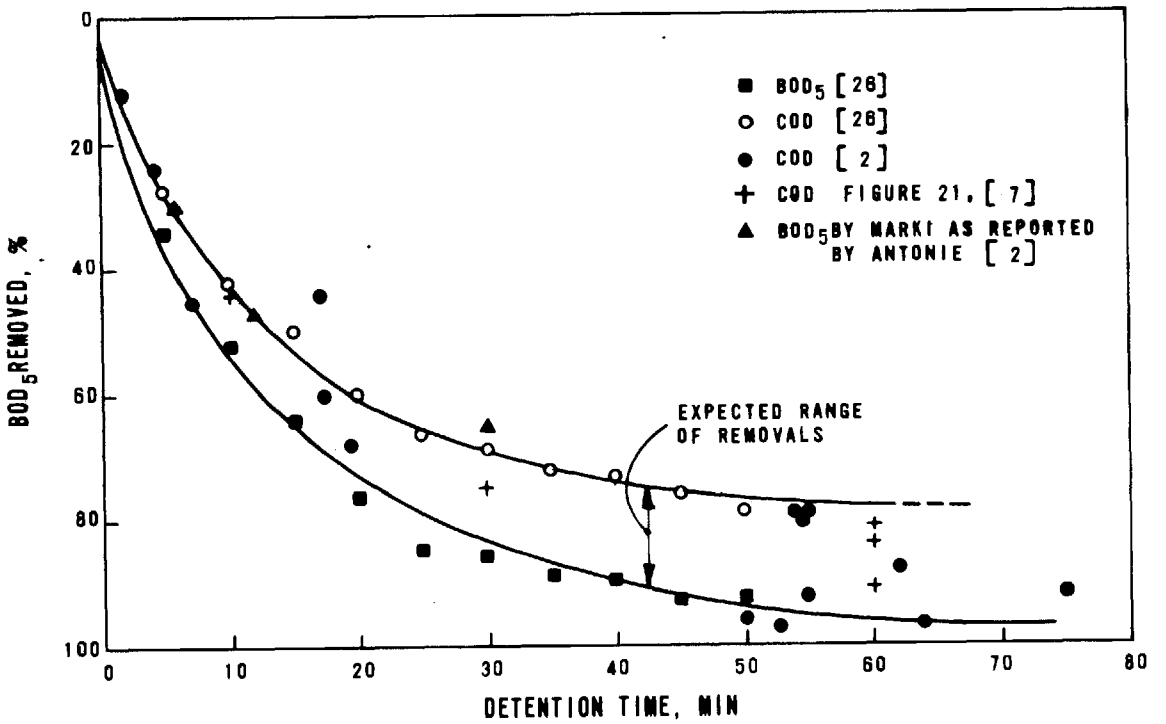

Figure 55. The effect of removals with varying contact times for rotating biological contactors

Several studies of methods for keeping the microorganisms alive between storm events have been made. In one test, the rotating biological contactor was operated for 8 hours a day and remained idle for 16 hours. The discs were rotated in the contacting tank, although there was no flow. The biomass remained active, but 4 hours of operation under normal conditions were required to bring removal rates back up to steady-state values. This 4-hour lag to reach peak efficiency would be too long for most combined sewer overflow conditions. A second condition was then tested. The facility was operated at the design flow and loadings for 8 hours and then for 16 hours at 25 percent of its design flow and organic loading. In almost all cases, removals during the entire 8-hour period were at peak efficiencies. The little lag time noticed during the first part of the 8-hour period was considered insignificant. Further study is needed to determine whether the rotating biological contactor can be operated during dry-weather flow conditions, with less than 25 percent of the flow and organic loading,

and still achieve this rapid startup. It is interesting to note, however, that this situation is reminiscent of an over-designed plant running at one-quarter load for two-thirds of the time. In a full-scale system, this would be the same as designing a rotating biological contactor treatment plant to handle the combined sewer overflows and to utilize it during dry-weather flows at much lower flow rates and organic loadings.

Another finding in research studies was that several units in series produce better removals than a single unit [26], and that the percentage of removal versus the number of units in series follows a curve similar to the contact time curve shown on Figure 55. In other words, the greater the number of units in series, the higher the removals [26]. The maximum number of units in series tested to date are the 12 shaft-disc assemblies in the Milwaukee prototype plant [7].

Design Parameters

The only formal method for designing a rotating biological contactor is that reported in manufacturers' catalogs. General design parameters reported from various sources, including the demonstration project at Milwaukee funded by EPA, are reported in Table 56. Three major design parameters are: (1) the biomass required, which is a function of the surface area upon which it will adhere; (2) the contact time; and (3) the number of shaft-disc assemblies in series needed to achieve the desired removal efficiency. The design procedure would be first to determine the disc area required from the curves on Figure 56, and then to determine the minimum detention time needed to achieve the design removal from the curves on Figure 55. The detention time should be based on the expected maximum flow. One particular point in any design of a rotating biological contactor, for obvious reasons, is the need for enclosing the unit in areas subject to freezing ambient temperatures.

Advantages and Disadvantages

The principal advantages of the rotating biological contactor are: (1) it has low power requirements, (2) a fair degree of flow variation can be handled, (3) shockloads are handled effectively, and (4) there are no fly and odor problems. On the other hand, the disadvantages are that (1) it requires a base flow to keep the biomass active, (2) there is little control of biological process, (3) more work is needed to define its capabilities, and (4) it must be enclosed in freezing climates.

Table 56. ROTATING BIOLOGICAL CONTACTOR DESIGN PARAMETERS [7, 4, 26, 2]

Design parameter	Range
Hydraulic loading rate, gpd/sq ft	2-8
Organic loading rate, lb BOD_5/day/1,000 sq ft	5-15
Detention time, min	15-20
Number of shaft-discs in series	4-10
Peripheral speed of discs, fpm	60
Approximate required power, kwh/1,000 lb BOD_5	4-5

Note: gpd/sq ft x 0.2828 = cu m/min/ha

lb BOD_5/day/1,000 sq ft x 4.88 = kg BOD_5/day/1,000 sq m

fpm x 0.0051 = m/sec

kwh/1,000 lb BOD x 2.2 = kwh/1,000 kg BOD_5

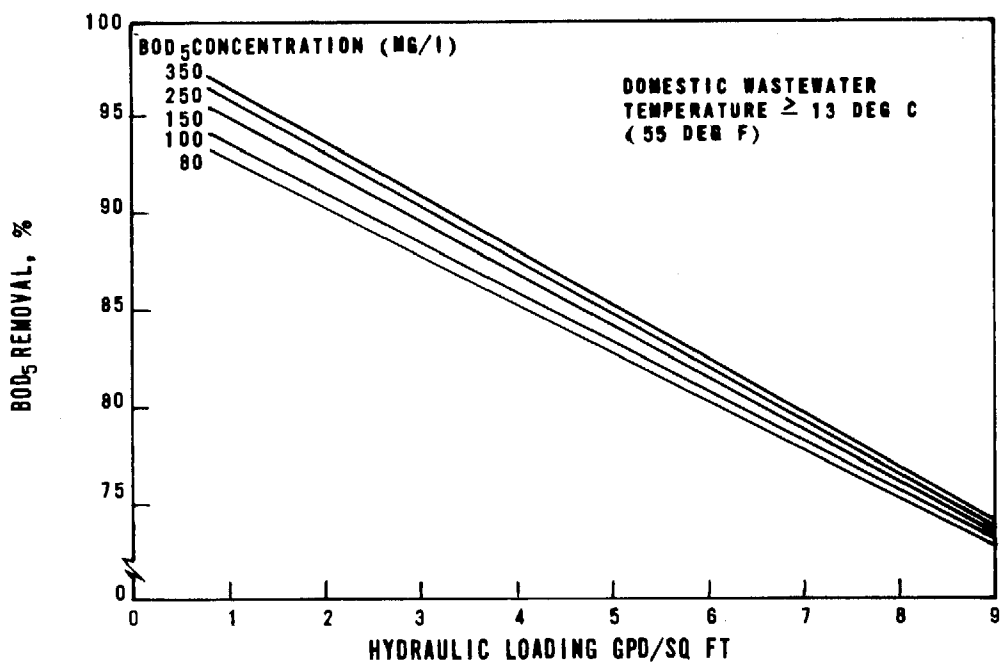

NOTE: GPD/SQ FT x 0.283 = CU M/MIN/HA

Figure 56. Hydraulic loading versus design BOD_5 removals for rotating biological contactors [4]

The major use of the rotating biological contactor is expected to be in treating both dry- and wet-weather flows in smaller communities. It fits their requirements because it is relatively easy to operate and can handle fairly wide variations in flow rates.

Demonstration Project, Milwaukee, Wisconsin

In Milwaukee, the application of the rotating biological contactor to combined sewer overflows was studied in three phases: (1) bench model testing, (2) pilot-plant testing, and (3) prototype facilities [9, 7]. The first two phases simulated combined sewer overflows, and the prototype was constructed on a 30-inch combined sewer to test the concept under actual conditions. Average dry-weather flow from the 14-ha (35-acre) tributary area was 2.2 l/sec (0.05 mgd). The prototype facility was designed for dry-weather flow conditions but had a hydraulic capacity of approximately 30 times the dry-weather flow, or 66 l/sec (1.5 mgd). The facility consisted of a pump station, a grit chamber that also acted as a small surge chamber, and 2 bays with 12 shaft-disc assemblies in each bay. The bottom was contoured to the discs, and a screw auger was placed down the center of each bay to remove settled sloughed biomass. The initial concept was to use this tank as a combination contact tank and settling chamber, but this proved unworkable.

In the Milwaukee study, overall BOD_5 removals were cited in the 70 to 90 percent range at design average dry-weather loadings; however, organic loadings in excess of 3 to 4 times dry-weather loadings reduced BOD_5 removal efficiencies to below 50 percent. Pilot-plant studies showed that the removals for COD were approximately 33 percent during these high loadings. The removal efficiencies calculated from the reported raw data obtained during the pilot-plant operation are presented in Table 57. Controlled treatment during wet-weather flows (70 percent or better COD removal efficiency) was maintained at hydraulic loadings up to 8 to 10 times dry-weather flow.

The variation in removal efficiencies can be attributed to changes in (1) organic loading rate, (2) contact time, (3) number of units in series, (4) effluent settling, and (5) high flow rates. At Milwaukee, BOD_5 removals decreased when loadings increased above 0.032 kg BOD_5/day/sq m (6.6 lb BOD_5/day/1,000 sq ft) of disc area. Below this loading rate, removals remained in the 90 percent range. When the loading rate was between 0.027 and 0.062 kg BOD_5/day/sq m (5.5 and 12.7 lb BOD_5/day/1,000 sq ft) of disc area, BOD_5 removals

Table 57. REMOVALS REPORTED IN PILOT-PLANT STUDIES OF ROTATING BIOLOGICAL CONTACTORS MILWAUKEE, WISCONSIN

	Dry-weather hydraulic loading, 2-4 gpd/sq ft			Wet-weather hydraulic loading, 11-12 gpd/sq ft		
Parameter	Influent, mg/l	Effluent, mg/l	% removal	Influent, mg/l	Effluent, mg/l	% removal
BOD_5	345	79	77	395[a]	181[a]	54
COD	550	165	70	617	394	33
Settleable solids	9.2	0.9	90	10.2	1.7	82
Suspended solids	349	68	77	315[b]	96[b]	70[b]
Nitrogen	40.5	24.7	38	--	--	--
Phosphorus	8.5	4.0	53	--	--	--

a. Derived from BOD:COD ratios. A single BOD_5 test was run with 80 percent removal.

b. Only two data points.

Source: Derived from data reported in [7].

Note: gpd/sf x 0.283 = cu m/min/ha

dropped from 90 to 70 percent. The relationship between BOD_5 removal and BOD_5 loading rate is shown on Figure 57.

As a result of the study at Milwaukee, clarification is recommended following the rotating biological contactor. At times, the prototype plant ran for several days discharging enough sloughed biomass to make the BOD_5, COD, SS, etc., higher in the effluent than in the influent. It was also reported that pretreatment by sedimentation improved removals.

TREATMENT LAGOONS

Since treatment lagoons are based on biological processes, three basic systems are available: anaerobic, aerobic, and facultative. Several different types of lagoons have been developed, using either one or more of these systems. These types are referred to as oxidation ponds, aerated lagoons, facultative lagoons, or anaerobic lagoons.

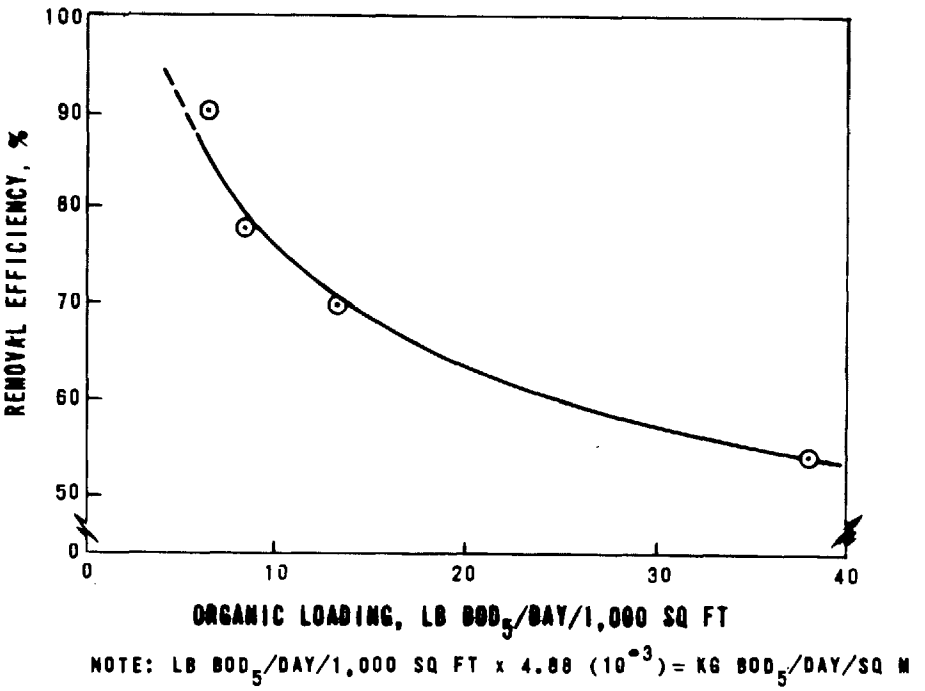

Figure 57. Relationship of removal efficiency to the organic loading rate for rotating biological contactors

Anaerobic lagoons, as the name implies, are devoid of oxygen and use anaerobic bacteria to decompose and stabilize the waste to carbon dioxide and methane gas. Settling is an important aspect of the operation of anaerobic lagoons. Unlike the other types of lagoons, anaerobic lagoons also require relatively stable feeding rates to prevent an upset in the treatment--that is, to ensure the maintenance of the delicate balance between acid-forming bacteria and methane-forming bacteria. This basic criterion alone is sufficient to eliminate anaerobic lagoons as a method of treating highly variable combined sewer flows.

The locations, types, and sizes of treatment lagoons used in combined sewer overflow treatment demonstration projects sponsored by EPA are listed in Table 58. Photographs of different combined sewer overflow treatment lagoons are

Table 58. COMPARISON OF DIFFERENT TYPES OF LAGOONS TREATING STORM FLOWS FOR VARIOUS CITIES

Location	Type of lagoon	Size, acres	Volume, mil gal.	Detention time, days	Design flow rate, mgd[a]
Springfield, Ill.	Equalization-oxidation pond	10	22.4	0.3	67
Shelbyville, Ill.					
Southeast site	Storage-oxidation pond	1	1.9	5.0	0.3[a]
Southwest site	Storage basin	3.9	4.0	2.8	1.4[a]
	Facultative pond	10.8	13.0	9.0	1.4[b]
	Facultative pond	2.1	2.1	1.5	1.4[b]
Mt.Clemens, Mich.	Storage-aerated lagoon	1.5	5.6	5.6	64.6[c]
	Oxidation pond	2.8	8.2	8.2	1.0
	Aerated lagoon	2.3	7.0	7.0	1.0
East Chicago,Ind.	Aerated facultative lagoon	∿30	185	1.0	185

a. Designed outflow rate; inflow can be much greater.

b. Storm flow rate; the ponds also treat 0.3 mgd of trickling filter effluent.

c. Design storm flow rate; outflow is 1.0 mgd.

Note: acre x 0.405 = ha
mil gal. x 3,785.0 = cu m
mgd x 3,785.0 = cu m/day

shown in Figure 58. In most cases, these treatment lagoons offer multiple uses and benefits. They can be used to supplement dry-weather treatment plants by acting as effluent polishers and inflow equalization basins (as in Rohnert Park, California); they offer some storage and settling capacity and flow attenuation for wet-weather flows; and they can be used as a central component of a community recreational area.

The average removals reported at the various study sites are listed in Table 59. The reported pollutant removal efficiencies for lagoons treating combined sewer overflows are somewhat varied, but the overall quality of the effluent is good. No attempt is made here to distinguish the difference between lagoon types.

The main factor affecting removal efficiencies for all types of lagoons is carryover of algae and other microorganisms in the effluent. This was true to some degree at all demonstration sites. At Mount Clemens, Michigan, in anticipation of this problem, a two-stage pressure sand filter and a microstrainer were installed to polish the effluent.

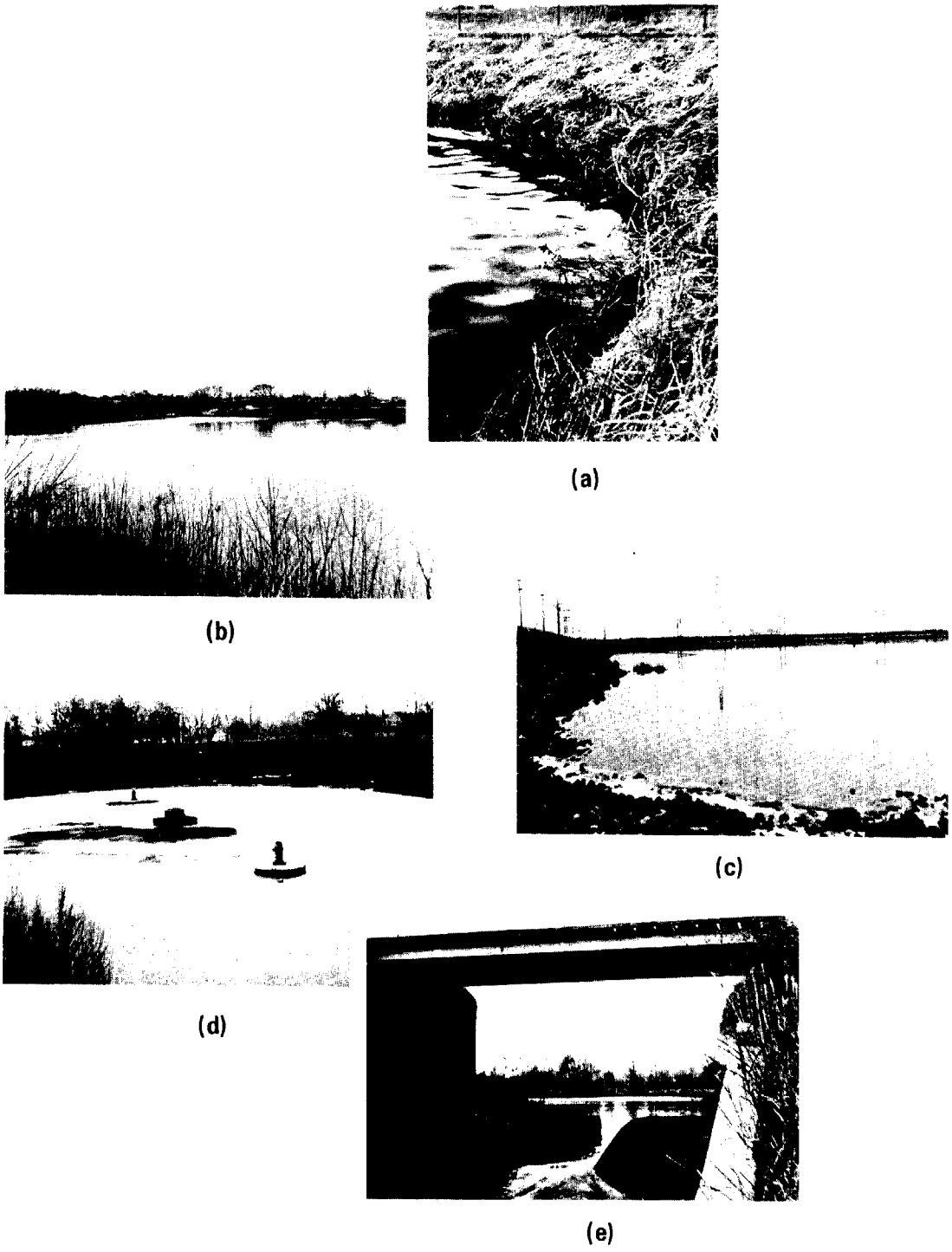

Figure 58. Combined sewer overflow treatment lagoons

(a) View of oxidation pond detailing grass embankment (Shelbyville) (b) Oxidation pond following primary clarification (Springfield) (c) Facultative lagoon with riprap embankment (E. Chicago) (d) Aerated lagoon, pond no. 1 (Mt. Clemens) (e) Compound overflow weir outlet (Springfield)

Table 59. REMOVAL EFFICIENCIES OF TREATMENT LAGOONS FOR VARIOUS CITIES (PERCENT)

Parameter	Springfield, Ill.[a]	Shelbyville, Ill.[b,c]		Mount Clemens, Mich.	East Chicago, Ind.[c]
		Southeast	Southwest		
BOD_5	27	47	91	91	∿50
SS	20	57	-4	92	∿50
VSS	Increased	30	28	NA[d]	NA
DO	Increased	NA	NA	NA	NA
Phosphorus	22	40	69	NA	NA
Nitrogen	NA	56	62	NA	NA
Coliforms	72	86	96	NA	NA

a. Based on daily samples, not necessarily coincident with storm flows.

b. Two sites at Shelbyville, both of which are oxidation ponds.

c. Figures presented are for dry-weather flow conditions and do not represent removals achieved during storm overflows.

d. Not available.

Two major operational problems were experienced. During freezing weather, floating aerators proved to be troublesome. The spray from floating aerators freezes on the motors, causing the units to overturn. Thus, their use was limited to periods when freezing of the spray did not occur. The second problem was inadequate provision for sludge storage in some of the ponds. The use of sedimentation tanks or basins ahead of the lagoons is necessary to reduce the SS load to the ponds.

Design criteria for lagoons used to treat combined sewer overflows have not yet been established. Conventionally, lagoon design is based upon the BOD_5 loading rate and flow rate. However, the wide variation of the BOD_5 loading rate for combined sewer overflows with respect to time simply means design cannot be based only on this parameter.

The advantages, disadvantages, and possible uses of the treatment lagoon are varied. Its major advantages are: (1) low capital costs, (2) virtually unattended operation, (3) low operation and maintenance costs, (4) capability of being easily modified to act also as a storage unit, and (5) ability to act as a polishing lagoon during dry weather.

Some disadvantages include: (1) large land areas are required; (2) proper design of discharge facilities is necessary to prevent discharge of algae and other microorganisms to the receiving water; (3) the degree of treatment is difficult to predict; (4) there are potential nuisance problems, such as mosquitoes, flies, and odors; and (5) sludge deposits reduce treatment capacity.

The following discussion of the various types of treatment lagoons begins with oxidation ponds and continues with aerated lagoons and facultative lagoons.

Oxidation Ponds

An oxidation pond generally is a shallow earthen basin designed to promote a symbiotic existence between algae and bacteria. Its depth is such that oxygen from algae and surface regeneration can keep the total volume of the pond aerobic. Several ponds are normally used together, most often in series operation, which helps reduce the amount of suspended solids in the effluent. Design of oxidation ponds usually includes consideration for sludge storage within the pond. The digestion of sludge deposits is sometimes anaerobic; however, this is not considered a limit in the definition of the oxidation pond as an aerobic system. Oxidation ponds that are used to treat municipal wastes have very long detention times, ranging from 20 to 120 days. The trend in treating combined sewer overflows is to use detention times of less than 20 days.

Removal Efficiencies — In oxidation ponds, removal efficiencies for suspended solids and BOD_5 can vary tremendously from positive to negative numbers. The reported ranges in removals are 60 to -50 percent for suspended solids and 70 to -10 percent for BOD_5 [17]. The reason for the high variation is that most of the influent BOD_5 is converted into suspended algae mass. This mass exerts a BOD_5 demand and creates suspended solids which are sometimes carried over in the effluent.

Factors Affecting Removal Efficiencies — Many factors affect the removal rates and efficiencies in oxidation ponds. Some

of the more significant ones (listed in general order of importance) are as follows:

1. Detention time.

2. Sufficient supply of oxygen either from algae, surface reaeration, or some mechanical means.

3. Mixing of the pond contents by wind or mechanical means.

4. Organic loading rate.

5. Removal of microorganisms and algae from the effluent.

6. Temperature.

7. Sludge storage capacity which, if insufficient, can reduce detention time and cause carryover in the effluent.

Most of these factors are also relevant to aerated and facultative lagoons and will be referred to in the subsections which follow.

The most important condition affecting removals is the detention time. Pollutant removals are obtained both by bacteria metabolizing the waste organics and by sedimentation. Thus, the detention time is based on the metabolism rate, the amount of biomass present in the ponds, and the temperature. A 10-degree Celsius drop in temperature reduces the metabolism rate by about one-half. It has been shown that with a detention time of 1 day up to 85 percent of the BOD_5 can be removed [5]. In the kinetic equations proposed by McCarty, a 1-day detention time may be too close to the minimum to be used in design [14]. In a recent study of treatment lagoons, it was reported that detention times of 2 to 3 days were required for conversion of all the biodegradable matter to new cells, and an additional 18 days were required for bacterial predators to consume these new cells [29]. This would reduce the need for effluent clarification and sludge-handling equipment.

Detention time can also affect removals by modifying the settling characteristics of the biomass. In a basin with plug flow or complete mix with no recycle, as is the case in treatment lagoons, the sludge age is equal to hydraulic detention time. Longer sludge ages result in better settling [15]. Poor settling means low BOD_5 removals due to carryover of cell tissue in the effluent.

The next two most important conditions affecting removals are (1) enough algae to supply the needed oxygen for bacterial assimilation of the waste organics and (2) proper mixing. The amount of algae in a pond is dependent upon the quantity of sunlight and usable carbon for algae synthesis. The quantity of sunlight varies with the latitude of the site and the amount of normal cloud cover [16]. In general, the more northern latitudes have less sunlight. During the winter in northern areas, the amount of sunlight for algae growth is affected also by ice cover. Carbon sources for algae include carbon dioxide, carbonates, and bicarbonates found in the influent water and carbon dioxide given off during respiration by the bacteria and algae. These two factors must therefore be considered when designing oxidation ponds.

Sufficient mixing is necessary to (1) ensure dispersion of the waste and oxygen throughout the pond volume, (2) ensure good bacterial action, (3) eliminate areas deficient in DO, and (4) prevent short-circuiting. Mixing can be accomplished by allowing the wind to mix the pond, using surface aerators, or recirculating.

Good mixing and high algae production, however, have limits. An oxidation pond can be overloaded with biodegradables. An overloaded pond results in septic conditions with slower anaerobic stabilization of the waste. Also, operational problems occur, such as odors (hydrogen sulfide, etc.). It is important, therefore, to keep the loadings within the mixing and oxygen production capabilities of the ponds.

Operational Considerations — Algae removal has been one of the most common problems in oxidation ponds [27, 15]. Several methods have been tried to reduce algae concentrations in the effluent. Those mentioned in the literature are long detention times, ponds in series, rock filters, sand filters, and chlorination, to name a few. A more detailed explanation of these methods is given in Table 60. Some of these methods can be used together to produce the desired results. A typical oxidation pond outlet with three concentric baffles to reduce the presence of algae is shown on Figure 59. Microstraining of pond effluent has not yet proven successful when using screen openings of 21 microns in size or larger [27, 10].

Design Parameters — Many design procedures for oxidation ponds are cited in the literature [17, 29, 13, 16]. The recommended design parameters for treatment of waste flows are presented in Table 61.

Table 60. METHODS OF REDUCING ALGAE IN THE OXIDATION POND EFFLUENT

Method	Description
Long detention times	Use of long detention times of 120 to 160 days allows endogenous respiration to reduce algae concentration [29].
Series of ponds	A series of ponds with outlets from each pond designed to reduce the carry-over of algal mass (see Figure 59 for a typical outlet) [29].
Settling	Prevention of wind action or other mixing action to allow settling of algae, bacteria, and other settleable material to improve the effluent. Settling should be done in the second or third pond in a series [29].
Rock filtration	Use of 1- to 2-inch rock around the outlet pipe to act in a manner similar to tube settlers [29].
Chlorination	Use of chlorine dosages high enough to kill the algae; provide a small pond for settling of the algae before discharge [29].
Chemical precipitation	Use of chemical coagulants to remove algae [29].
Filtration	Use of dual-media high rate filtration to remove algae [27, 8, 21].
Macroorganisms	Use of crustaceans, such as Daphnie, in a final pond to feed upon the algae and other suspended organic matter [11].

Note: inch x 2.54 = cm

Aerated Lagoons

There are two types of aerated lagoons: (1) the complete mix system, simulating a modification of activated sludge treatment; and (2) the aerated oxidation pond in which complete mixing is not achieved but enough oxygen is supplied for bacterial activity. Aerated lagoons are usually earthen basins, lined or unlined. Unlike oxidation ponds, oxygen is supplied by mechanical or diffused aeration equipment.

Aeration Equipment – At least six different types of aeration equipment can be used in an aerated lagoon, as shown on Figure 60. Floating mechanical aerators are used most widely. The floating rotor aeration unit, sometimes called a Kessener Brush or cage rotor, is a relatively recent development. Weighted plastic tubing with openings along

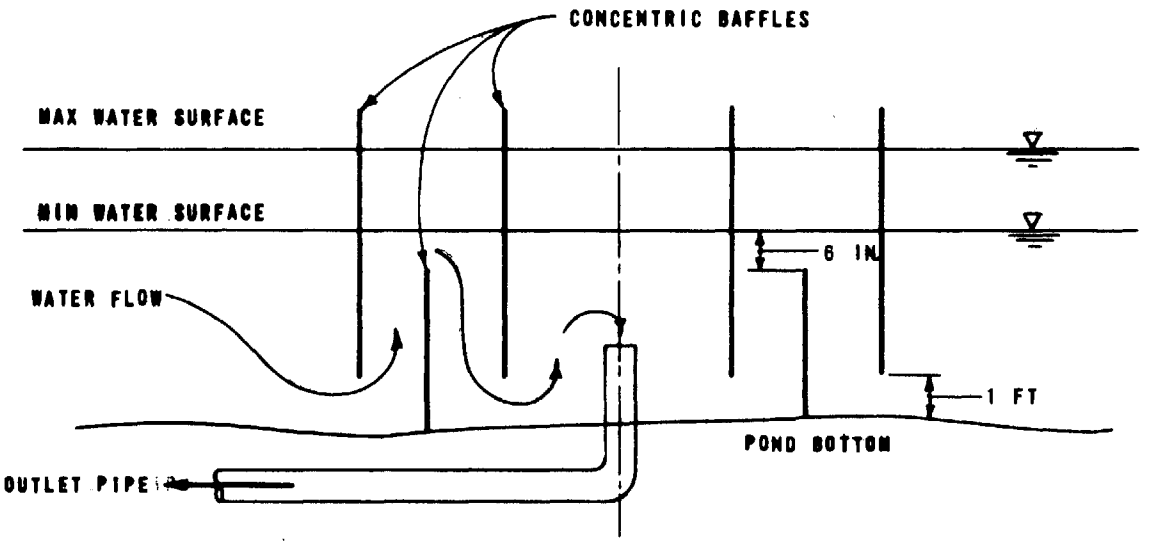

Figure 59. Typical oxidation pond outlet with three concentric baffles to reduce the presence of algae in the effluent

Table 61. OXIDATION POND DESIGN PARAMETERS [17, 29, 5, 16]

Organic loading rate, lb BOD_5/acre/day	21-50
Detention time, days	
Overall	30-160
Per pond	10-40
Optimum	20
Depth, ft	2-5
Optimum	4
Number of ponds	2-6
Pond configuration:	
Shape	Adaptable to terrain
Inlet	Center generally preferred (anything that reduces short-circuiting)
Outlet	Designed to vary pond level from 2 to 5 ft in-6 in. increments and to reduce the amount of algae transfer

Note: lb BOD_5/acre/day x 1.12 = kg BOD_5/ha/day
feet x 0.305 = m
inch x 2.54 = cm

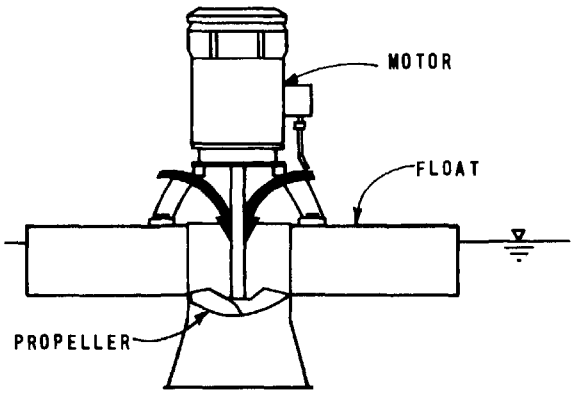

(a) FLOATING (MECHANICAL) AERATOR

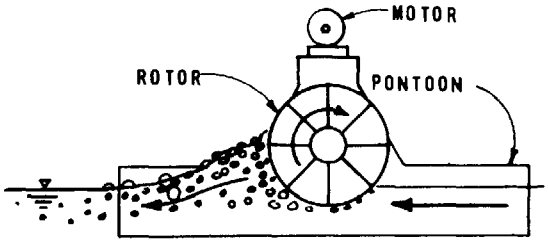

(b) AERATION ROTOR

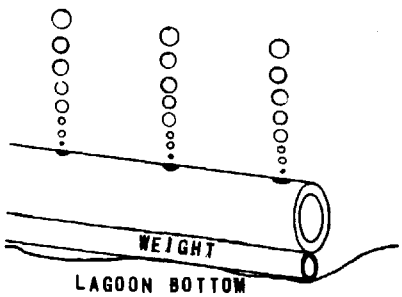

(c) PLASTIC TUBING AERATOR

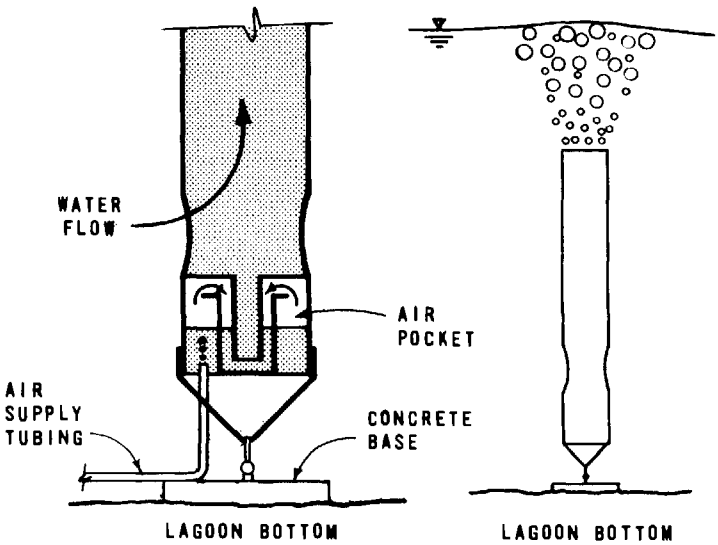

(d) AIR GUN AERATOR

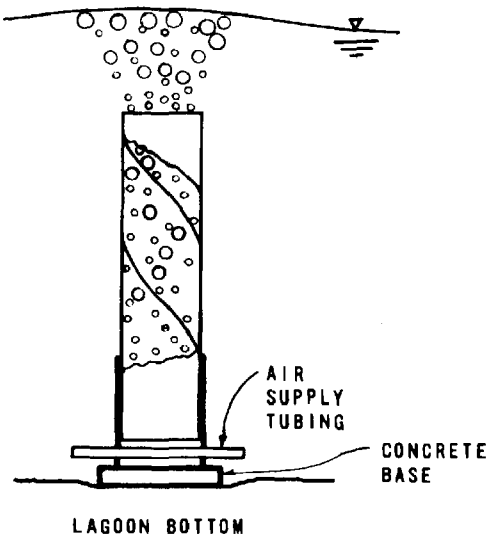

(e) HELICAL AERATOR

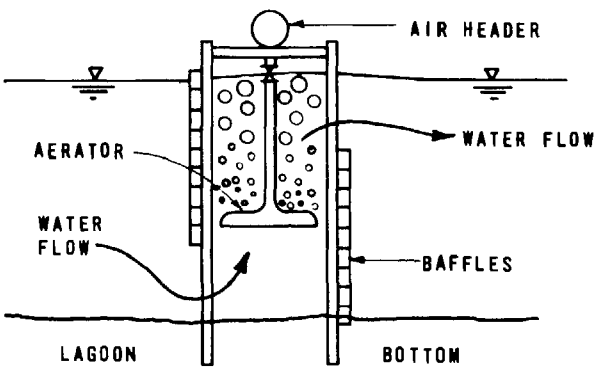

(f) INKA AERATOR

Figure 60. Types of aerators

its length has been used to supply extra oxygen to overloaded oxidation ponds. The tubing is used extensively in the northern climates where freezing of the ponds is a common occurrence. The remaining three types of aerators, also diffused aeration systems, are the helical diffuser, the air gun, and the INKA system. The air gun, used for deeper ponds, operates in a pulsating manner, discharging air up through a vertical tubing and drawing in behind it a column of water. It not only aerates the water but also has good pumping action. The helical diffuser is made of extruded plastic formed into a cylinder with a spiral interior baffle designed to lengthen the flow pattern of air bubbles and water. In the diffuser, air is injected at the bottom of the vertical extruded plastic tube, which sits on the bottom of the pond. The air bubbles rise in a spiral manner up the plastic pipe drawing in water behind them. The INKA system consists of an 8-foot by 5-foot diffuser plate placed in between vertical baffles to create an airlift pump effect, thus circulating the water past the diffusers. The advantages and disadvantages of each type are listed in Table 62.

Table 62. TYPES OF AERATION EQUIPMENT FOR AERATED LAGOONS

Types	Advantages	Disadvantages	Depths at which commonly used, ft
Floating mechanical aerator	Good mixing and aeration capabilities; not affected by sludge deposits; easily removed for maintenance.	Ice problems cause turning over during freezing weather; ragging problems without a weedless impeller.	10-15
Floating rotor aeration unit	Probably unaffected by ice; not affected by sludge deposits.	Possible ragging problem.	~3-10
Plastic tubing diffuser	Not affected by floating debris or ice; no ragging problems.	Calcium carbonate buildup blocks air diffusion holes; is affected by sludge deposits.	3-10[a]
Air guns	Not affected by ice; good mixing; good for deep lagoons.	Calcium carbonate buildup blocks air holes; potential ragging problems; is affected by sludge deposits.	12-20
INKA system	Not affected by ice or sludge deposits; good mixing.	Potential ragging problems.	8-15
Helical diffuser	Not affected by ice; relatively good mixing.	Potential ragging problems; is affected by sludge deposits.	8-15

a. Has also been used in lakes at much deeper depths.

Note: ft x 0.305 = m

Removal Efficiencies – Regardless of the type of aerator, most aerated lagoons are constructed in multiple ponds. The ponds may be used in either series or parallel operation. Final clarification is required to achieve good BOD_5 and SS removals. Removals range from 75 to 95 percent for both BOD_5 and SS when sufficient settling is provided [29, 17, 13]. With detention times of less than 3 to 5 days and no settling, the removals are much lower.

As previously discussed, DO concentration, adequate mixing, control of biological solids carryover, short-circuiting, and temperature all have an effect on removal efficiency. In most cases, detention times longer than 2 days provide sufficient treatment for the dissolved portion of the waste. For good settling, detention times should be more than 3 to 4 days. In most designs, neither DO nor mixing are problems. Problems generally occur in providing adequate mixing in a lagoon designed as a complete mix system. When mixing is incomplete, settling occurs. This removes some of the biomass from intimate contact with the waste material and leads to a reduction in efficiency.

Design Considerations – The method of design for an aerated lagoon depends on the type to be constructed. Aerated oxidation ponds are normally designed by using empirical design parameters. The kinetic design approach is not used because settling is difficult to account for and the flow regime is difficult to analyze. Typical design parameters found in the literature are listed in Table 63. Factors that must be considered include (1) BOD_5 removal, (2) effluent characteristics, (3) oxygen requirements, (4) temperature effects, and (5) energy requirements for mixing. For actual design methods, the reader is directed to the many presented in the literature [17, 29, 25, 5].

Complete mix aerated lagoons often are designed using empirical parameters. It is also possible, however, to use kinetic equations to design a proposed pond. A complete description of the kinetic equation method for designing an aerated lagoon can be found in reference 17.

All aerated lagoons should include some process for removing biosolids from the effluent. The most common process is final settling, either in a concrete tank or in a small non-aerated final pond. In aerated oxidation ponds, settling normally occurs within the ponds, and a final pond or settling tank is not required. Other forms of removing biosolids, such as sand filters, can be used. The design of ponds used for solids removal should include volume for storage of the accumulated sludges. No annual sludge volume accumulation in ponds for treating combined sewer overflows has been reported.

Table 63. AERATED LAGOON DESIGN PARAMETERS

Description	From the literature	Aerated oxidation pond	Complete mix aerated lagoon
Organic loading, lb BOD_5/acre day	100-1,000	100-500	500-1,000
Detention time, days	2-10	5-11	1-8
Optimum, days	--	--	4-6
Number of ponds	2-6	2-6	1-4
Depth, ft	8-15	6-10	10-15
Mixing requirements for a complete mix regime			
hp/1,000 cf	--	--	0.2-0.5
Minimum pond velocity, fps	--	--	0.5
Type of aeration and amount of oxygen transfer[a]			
Floating aerators, lb O_2/hp/hr	1.8-4.5	--	--
Floating rotor aeration unit, lb O_2/hp/hr	∿3-4	--	--
Plastic tubing aerator, lb O_2/hr/100 ft	0.2-0.7	--	--
@ air supplied, scfm/100 ft	1-2	--	--
Air gun, lb O_2/hr/gun	0.8-1.6	--	--
@ air supplied, scfm/gun	3-18	--	--
Helical aerator, lb O_2/hr/aerator	1.2-4.2	--	--
@ air supplied, scfm/aerator	8-30	--	--
INKA aerator	Unknown	--	--

a. All of the oxygen transfer figures are general and should be verified for design.

Note: lb BOD_5/acre/day x 1.1208 = kg BOD_5/ha/day
ft x 0.3048 = m
fps x 0.3048 = m/sec
lb O_2/hp/hr x 0.6083 = kg O_2/kwh
lb O_2/hr/100 ft x 1.4882 = kg O_2/hr/100 m
lb O_2/hr/unit (gun, aerator) x 0.4536 = kg O_2/hr/unit
scfm/100 ft x 0.9284 = cu m/min/1,000 m
scfm/aerator x 0.0283 = cu m/min/aerator

Facultative Lagoons

Facultative lagoons contain three zones or layers of biological activity: (1) the upper or aerobic layer, (2) the middle or facultative layer, and (3) the lower or anaerobic layer. Facultative lagoons are deeper than those previously discussed, and intermixing of the layers is minimized. Such systems utilize the good features of both the anaerobic and the aerobic lagoons. Settled materials, along with some of the dissolved and suspended material, are allowed to stabilize anaerobically into gaseous end-products and humus. In the upper layer, the dissolved and suspended matter is oxidized. The presence of this zone also helps to eliminate the undesirable gaseous end-products given off in the anaerobic zone. The facultative zone acts as a transition zone with both aerobic and anaerobic metabolism of the waste products occurring. The chemical reactions within each zone are shown on Figure 61.

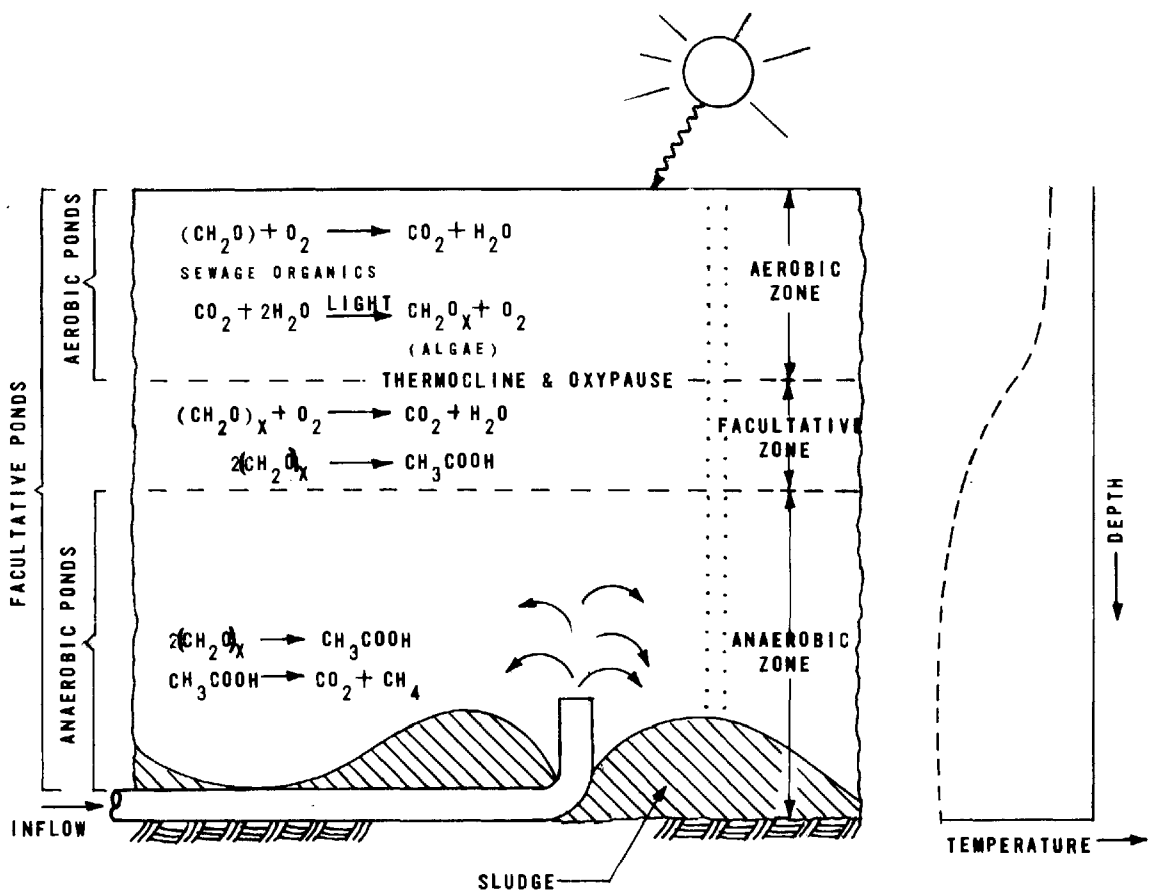

Figure 61. Reactions found in facultative lagoons [18]

Originally, facultative ponds used algae to keep the upper layer aerobic. Recently, aeration equipment has been added to some ponds to ensure sufficient DO to keep them from becoming completely anaerobic. However, the aerator size must be limited to prevent the pond from becoming a completely mixed system.

Removal Efficiencies – BOD_5 removals up to 90 to 95 percent have been reported for facultative ponds treating municipal sewage. The most common figures, however, are between 70 and 85 percent [29, 5, 12, 16]. Higher bacterial removals have been reported for facultative lagoons than for aerated lagoons or oxidation ponds [16, 5]. For facultative ponds treating combined sewer overflows, BOD_5 removal efficiencies ranging from 50 to 90 percent and SS removals of approximately 50 percent have been reported.

Operational Considerations – In most cases, the factors affecting oxidation ponds and aerated lagoons also control the performance of facultative ponds. Detention time, proper supply of oxygen either by algae or aeration equipment, sludge age for good settling characteristics, algae removal in the effluent, temperature, and short-circuiting all affect removals [16, 17, 12, 18]. The notable exception is the need for mixing. In facultative ponds, some mixing of the upper and lower layers is important to promote good distribution of pollutants throughout the individual layers. Complete intermixing should be avoided to prevent odors from escaping through the aerated zones without being oxidized. This is usually handled by making the ponds deep enough to create a thermocline, which limits mixing between layers, and by using multiple small ponds to limit wind mixing. Care, with respect to mixing, must be exercised when using mechanical aeration equipment. Isolating the anaerobic zone has also been accomplished by pond configuration, as shown on Figure 62 [16, 18].

The principal conditions affecting operation of facultative lagoons are the type of aeration equipment (if used) and adequate sludge storage. When facultative lagoons use aeration equipment to supply additional oxygen, care is needed in selecting the proper type, with mixing restrictions and cold-weather problems in mind. The lack of sludge storage capacity may necessitate excessive maintenance in removing accumulating sludges and also can prevent proper operation of the lagoon.

Design Parameters – From a survey of the literature, a lack of specified design parameters is evident. Most facultative lagoons are designed for 56 kg BOD_5/ha/day (50 lb BOD_5/acre /day) or less, depending on the geographical latitude of the

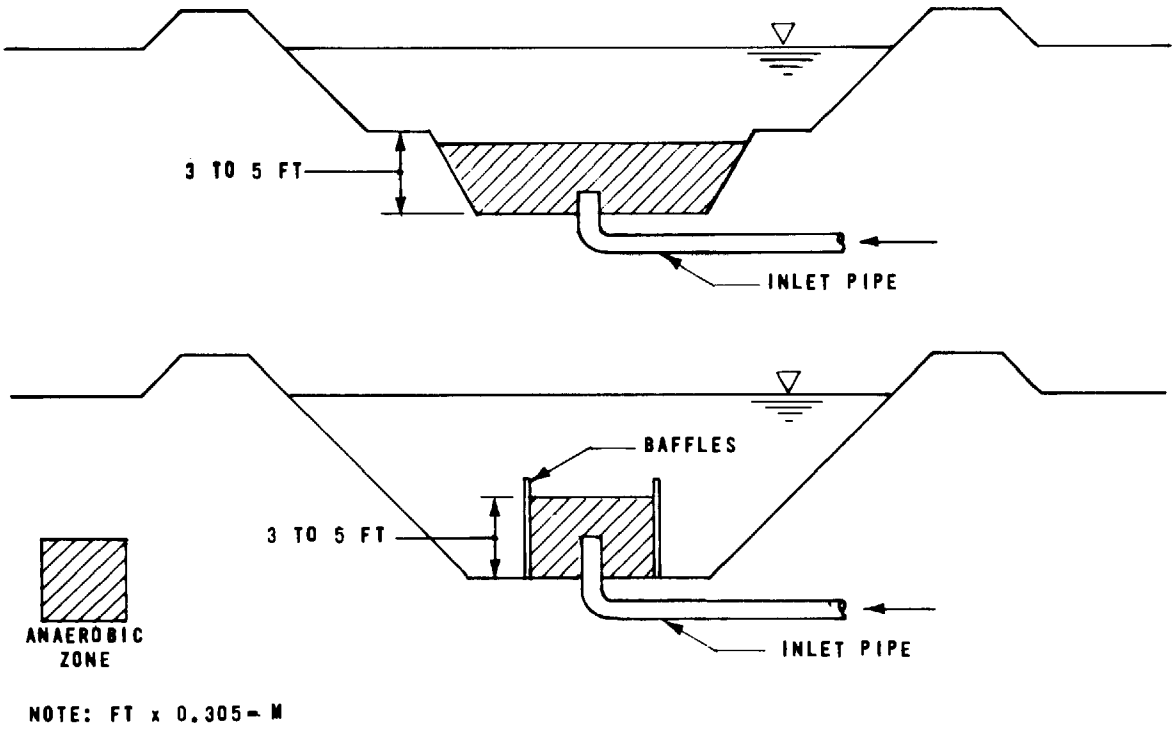

Figure 62. Two pond configurations to promote anaerobic zones and decomposition of settled material [18]

site location. Generally, loadings are reduced in the more northerly latitudes. In areas of possible ice cover during the winter, the normal loading is 17 kg BOD_5/ha/day (15 lb BOD_5/acre/day). Predicting the final performance of facultative lagoons is difficult, regardless of the design procedure used [12]. Design parameters reported in the literature are listed in Table 64.

Demonstration Projects

Springfield, Illinois [22] – Combined sewer overflows from a pumping station in Springfield to a natural drainage channel reportedly were responsible for repeating instances of fish kills in Sugar Creek during the 1960s. About 95 percent of the flow in the channel during storm periods originates at the pumping station. The pump station serves a tributary area of 894 ha (2,210 acres) and has a maximum capacity of 856 l/sec (19.5 mgd) or approximately 5 times the average daily flow. The combined sewers entering the

Table 64. FACULTATIVE LAGOON DESIGN PARAMETERS [17, 16, 29]

Organic loading in summer, lb BOD_5/acre/day	15-80
Detention time, days	7-120[a]
Depth	
Total, ft	6-12
Anaerobic zone, ft	3-4
Number of ponds	2-10
Pond configuration:	
Shape	Not important
Inlet	Center inlet superior, near bottom
Outlet	Designed to reduce amount of algae transfer when not using mechanical aeration

a. 120 days for complete treatment with good coliform removals [28].

Note: lb BOD_5/acre/day x 1.12 = kg BOD_5/ha/day
ft x 0.305 = m

pump station have a combined capacity of 23,000 l/sec (494 mgd).

To abate this combined sewer overflow pollution problem, a storage/oxidation pond was constructed in 1967. The main purpose of the pond was to provide flow attenuation of the combined sewer overflows. The 4.1-ha (10-acre) pond was designed to provide 8 hours of detention at a flow rate of 2,940 l/sec (67 mgd). It was estimated that a 5-hour detention time would account for approximately 70 percent removal of SS and 30 percent removal of BOD_5 from the combined sewer overflows by sedimentation alone. Further improvements would occur as the pond functioned as an oxidation pond between storm events.

Performance of the pond during a 20-month period of observation indicated that it was successful in preventing severe deterioration of downstream water quality due to combined

sewer overflows. Average annual BOD_5 reduction was 27 percent. Best evidence of the efficiency of the facility was afforded by the fact that incidence of fish kills was limited following construction of the storage/oxidation pond.

Plans are presently underway to expand the facility to 3,280 l/sec (75 mgd), including the construction of a clarifier and chlorination facility ahead of the existing pond. The new clarifier is necessary to reduce the sediment buildup in the existing pond. Approximately 21 percent of the pond had been filled with sediment after 2-1/2 years of operation.

Shelbyville, Illinois [1] – Three different combined sewer overflow treatment units were constructed during 1968-69. Two units included storage/oxidation ponds and one unit was a primary sedimentation tank. The two storage/oxidation pond treatment schemes are described below.

Southeast site – A single-cell oxidation pond serves as a combined sewer overflow treatment facility for a 17.8-ha (44-acre) tributary area. The pond was designed and constructed by building an earthen embankment across the lower reaches of a natural ravine downstream from an existing combined sewer overflow. At the maximum water depth of 2.4 meters (8 feet), the pond has a volume of 7,230 cu m (255,600 cu ft) and a surface area of 0.41 ha (1 acre). The volume is sufficient to contain the 10-year storm of 1-hour duration.

The liquid level in the pond is controlled by two 30.5-cm (12-inch) square sluice gates mounted in an effluent structure. One gate is located at an elevation corresponding to the pond bottom, and the second gate is mounted 0.6 meter (2 feet) higher. The lower gate is normally closed, and the upper one is set to drain a full pond to the 0.6-meter (2-foot) level in five days.

Normal pond operation is a flow-through pattern, and during dry weather, the average water depth is 0.6 meter (2 feet). During wet weather, the pond discharge increases as the depth of water over the effluent sluice gate increases. There is always about 0.5 l/sec (12,000 gal./day) of dry-weather flow into the pond from undetermined sources. The pond, at the 0.6-meter (2-foot) level, provides a detention time of 6 days at this flow. The average BOD_5 loading for the dry-weather flow is 35.5 kg/ha/day (31.7 lb/acre/day).

During dry weather, the effluent contained 15.7 mg/l BOD_5 and 31 mg/l SS. This was the result of removal efficiencies

of 47 and 57 percent for BOD_5 and SS, respectively. During periods following combined sewer overflows, the pond was found to discharge a very low BOD_5 effluent (6 mg/l). Suspended solids in the effluent were considerably higher (50 to 75 mg/l) with only a moderate average decrease with time. Both SS and BOD_5 were discharged in greater concentrations during periods of high influent flows because of carryover and short-circuiting. Fecal coliforms were also reduced across the pond.

Southwest site – To provide treatment for combined sewer overflows from a tributary area of 183 ha (450 acres) during wet weather, as well as tertiary treatment for a dry-weather trickling filter plant effluent, a storm-holding lagoon and a two-cell facultative pond were constructed. The first cell is designated as the stabilization pond and the second cell is the polishing pond. The storm-holding lagoon has a capacity of 15,140 cu m (535,000 cu ft) at a maximum depth of 2.4 meters (8 feet). This lagoon was sized to contain the expected runoff from a 10-year storm of 1-hour duration. The maximum flow anticipated is 4,820 l/sec (110 mgd).

Effluent from the storm-holding lagoon is pumped to the stabilization pond. The pumps can empty the lagoon in about 5 days. Effluent from the trickling filter plant is pumped to the stabilization pond. The effluent from the stabilization pond flows by gravity to the polishing pond. Effluent from the polishing pond is chlorinated before discharge to the receiving water stream.

BOD_5 and SS removal efficiencies for the storm-holding lagoon were reported to be 73 and 86 percent, respectively. Based on dry-weather performance, the two-cell facultative pond and chlorination system following the storm-holding lagoon will provide significant reductions in soluble nutrients and complete elimination of measurable fecal coliform organisms.

East Chicago, Indiana – The recently completed combined sewer overflow treatment facility at East Chicago consists of a pumping station and a 12.1-ha (30-acre) facultative lagoon that is 12.2 meters (40 feet) deep. During storm conditions, the combined sewer overflow is pumped to a diversion structure at the outlet weir where excessive flows can be bypassed directly to the Little Calumet River. During normal storm conditions, the flow enters the lagoon for treatment. Nine surface aerators provide oxygen to the top few feet of the water in the lagoon for aerobic oxidation of the organic matter in the combined sewer overflow. The sludge that settles to the bottom is decomposed anaerobically. Effluent from the lagoon is discharged

through a slotted weir having a maximum capacity of 876 l/sec (20 mgd).

This is a dual-purpose lagoon, since it also provides effluent polishing for a municipal sewage treatment plant. Evaluation of the lagoon is underway currently. Thus, no operational data are available at present.

Mount Clemens, Michigan [27, 8, 21] – At Mount Clemens, combined sewer overflows from an 86-ha (212-acre) test area are treated in three lagoons in series. The first lagoon acts as a combination storage basin and aeration lagoon, the second as an oxidation pond, and the third as another aeration lagoon. The average depth of the lagoons is 2.4 to 3.1 meters (8 to 10 feet). Overflows up to a design maximum rate of 2,800 l/sec (65 mgd) are directed to the first lagoon for storage and partial treatment. They are then pumped at a constant 43.8-l/sec (1-mgd) rate through a microstrainer to the second pond, and then flow by gravity to the third lagoon. The design retention times in the ponds are 4 days, 8 days, and 7 days, respectively. Effluent from the final lagoon is discharged to the Clinton River following high-rate pressure filtration and chlorination. During dry weather, water in the last two ponds is recycled through the filters and reclaimed for recreational purposes (fishing and boating).

The lagoons or "lakelets" are free-form in shape and set within an attractive 9.7-ha (24-acre) park site with scenic walks, benches, and picnic sites. The variable-level lakelet 1 is obscured from public view, but lakelets 2 and 3 are to be opened for small-boat sailing, canoeing, and fishing.

In 28 combined sewer overflow operations in the period August to December 1972, BOD_5 and SS removals averaged better than 90 percent, with average effluent concentrations of 5.2 mg/l and 14.5 mg/l, respectively. The main factor affecting removal efficiencies was carryover of algae and other microorganisms in the effluent. At Mount Clemens, in anticipation of this problem, a two-stage pressure sand filter and a microstrainer were installed to polish the effluent. Sand filtration proved the most successful.

Two major operational problems were experienced. During freezing weather, spray freezes on the motors, causing the units to overturn; thus, their use was limited to periods when freezing of the spray did not occur. The second problem was inadequate provision for sludge storage in some of the lagoons.

In response to highly favorable public reaction and to offset the problems experienced, plans are underway to greatly extend and expand the present facilities. A schematic diagram of the proposed modified facilities is shown on Figure 63. The plan is to construct some new interceptors to drain combined sewer overflows from about 4/5 of the city to diversion structures. The rest of the city is on a separated system. The diverted combined sewer overflows would be pumped to a new retention structure. This structure would provide some sedimentation in a prestorage unit and aeration in the retention basin. Stormwater would be pumped from here after equalization to a new clarifier and dual-bed filtration unit and then to the existing lagoons. The first lagoon will use air guns for aeration, and the last lagoon will use tube-diffused aeration. The lagoons will be stone lined and will have shallow side slopes to improve their appearance. It is interesting to note that the land around the pond site is being built up with high rise apartment buildings.

COSTS

Costs for the various EPA demonstration grant projects have been collected for comparison purposes. Construction costs and the available operation and maintenance costs are presented in Table 65. The costs are also given on the basis of capacity and tributary area. It should be remembered that those costs are generally derived from a single prototype facility and costs for future facilities could vary tremendously from those presented.

The cost of the Kenosha contact stabilization plant is based on the cost of an aeration chamber, secondary clarifier, some site piping, pumps, and controls. The capital cost does not include the cost for headworks and chlorination facilities. The operation and maintenance cost is based on limited data, since the study is still underway.

At New Providence, New Jersey, the total construction costs of $1,410,000 (ENR 2000) were for a complete treatment plant, including modifications of an existing main pump station and new primary and secondary clarifiers, two trickling filters, chlorine contact tank, administration building, and miscellaneous items. Land costs were not reported. Since it is unrealistic to charge all of these costs to storm facilities alone, the costs for the plastic medium filter and the final clarifier, one-half the costs for the electrical equipment and site piping, the chemical feed equipment, and one-half the cost of the construction site work were combined to form the cost of the storm facilities. The remaining costs were

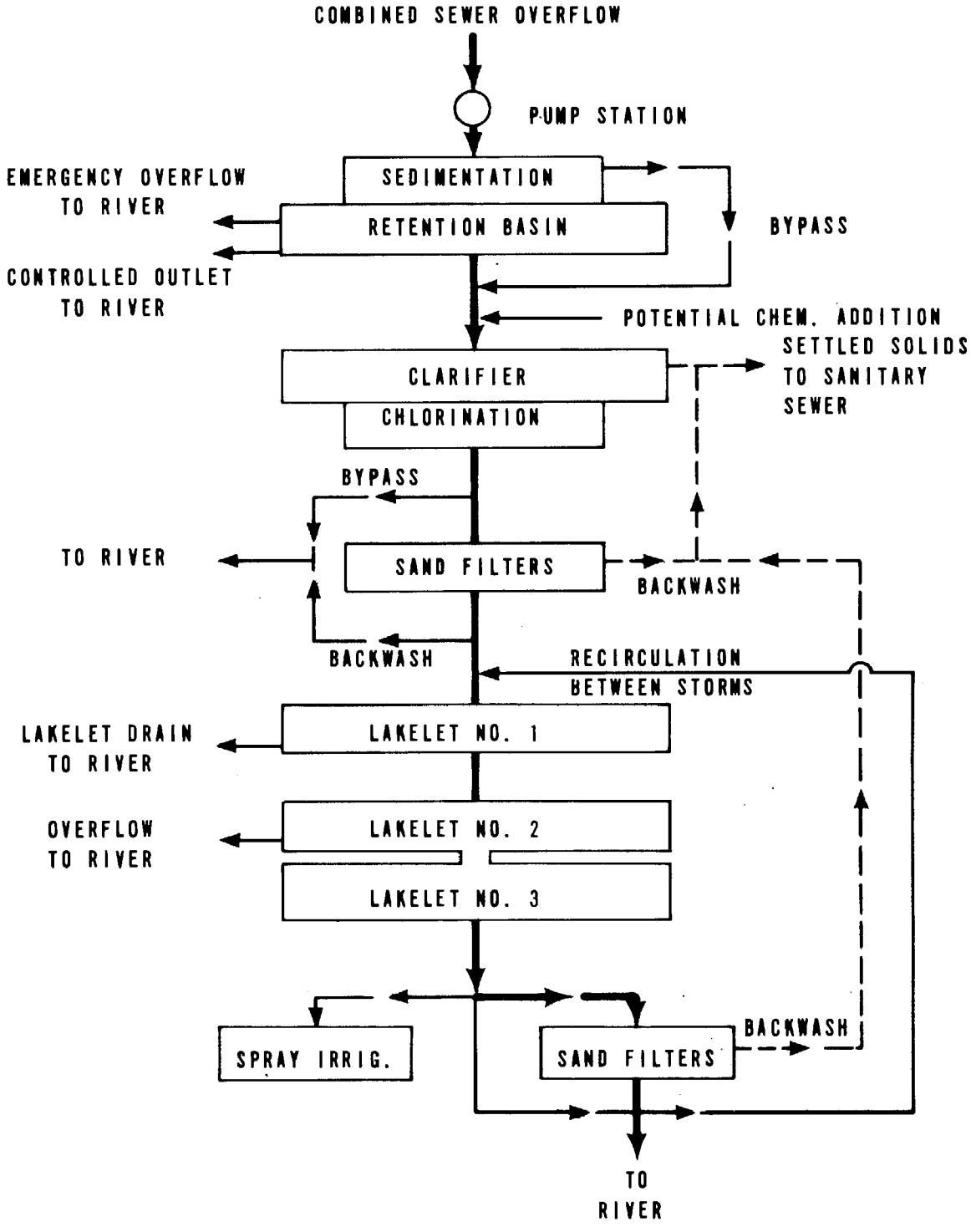

Figure 63. Schematic of retention and treatment facilities, including proposed modifications, Mount Clemens, Michigan

Table 65. CAPITAL AND OPERATION AND MAINTENANCE COSTS FOR BIOLOGICAL TREATMENT[a]

Type of plant and location	Plant capacity, mgd	Capital cost (construction cost excluding land)			Operation and maintenance cost (annual cost assuming 250 hr/yr of operation), ¢/1,000 gal.
		$	$/mgd	$/tributary-acre	
Contact stabilization					
Kenosha, Wis.	20	1,566,000[b]	78,300	1,710	4.8
Trickling filter					
New Providence, N.J.	6	475,000[c]	79,150	--	∿6.1[d]
Rotating biological contactor					
Milwaukee, Wis.	10.4	312,000	30,000	8,940	4.4
Oxidation ponds					
Shelbyville, Ill.	110	2,600,000	23,625	4,875	--
Springfield, Ill.	67	432,000	6,445	250	1.0
Aerated lagoon					
Mount Clemens, Mich.	65	1,080,000	16,615	5,100	--
Facultative lagoon					
East Chicago, Ind.	20	--	--	--	--

a. ENR = 2000.

b. Cost of pumps, aeration tanks, and final clarifier.

c. Includes cost of plastic medium filter, final clarifier, piping, electrical work, chemical feed, and site work.

d. Approximate cost of dry-weather flow.

Note: mgd x 43.8 = l/sec
$/mgd x 0.0228 = $/l/sec
¢/1,000 gal. x 0.264 = ¢/1,000 l

attributed to the dry-weather portion of the plant. The total annual operation and maintenance costs were $127,000. The combined sewer overflow treatment facilities portion of these costs were assumed to be equivalent to 3 percent of this value, assuming that wet-weather flows occur only 3 percent of the time.

Costs reported for the Milwaukee rotating biological contactor plant did not include a secondary clarifier. Consequently, an estimate for a clarifier has been included in the capital cost shown in Table 65. Two 38.1-meter (125-foot) diameter clarifiers with an overflow rate of 2.04 cu m/hr/sq m (1,200 gpd/sq ft) would be required.

Additional cost data for oxidation ponds to treat 1,095 l/sec (25 mgd) of overflow are presented in Table 66. The original cost data for treating combined sewer overflows by means of oxidation ponds varied tremendously because of the variable pond volumes and detention times. To eliminate this difference, ponds at all sites listed in the table were adjusted to a 10-day detention time at a capacity of 1,095 l/sec (25 mgd). Both the results of this modification and the original data are shown. The modified capital costs are within 30 percent of each other; the average cost is $1,731,100. Probably the best way to express cost is by dollars per cubic meter. The average for this value is $1.83/cu m ($2,256/acre-ft).

Cost data for aerated lagoons treating combined sewer overflows should be similar to costs for oxidation ponds except for the added capital and operation and maintenance costs for the aeration equipment.

Table 66. COST FOR OXIDATION PONDS TO TREAT 25 MGD OF OVERFLOW[a]

Item	Springfield	Shelbyville Southeast	Shelbyville Southwest
Original data adjusted to 25-mgd flow rates			
Capital cost, excluding land cost:	$ 188,000	$ 689,000	$1,814,000
Detention time, days	0.9	5.0	10.5
Volume of ponds at design level, acre-ft	6.9	384	806
Operation and maintenance cost for 250 hr/yr of operation	$ 2,200	--	--
Cost to treat 1,000 gal. of overflow for 250 hr/yr, ¢/1,000 gal.	0.02		
Modified data			
Capital cost, excluding land cost at a dentention time of 10 days	$2,090,700	$1,376,400	$1,726,200
Capital cost per acre-ft of pond volume	$ 2,725	$ 1,794	$ 2,250

a. ENR = 2000.

Note: acre-ft x 1,233.4 = cu m
¢/1,000 gal. x 0.264 = ¢/1,000 l
$/acre-ft x 8.11 ($10^{-4}$) = $/cu m

Section XII

PHYSICAL-CHEMICAL SYSTEMS

When a high-quality effluent is required, such as may be expected in stormwater reclamation and reuse, physical-chemical treatment systems may become both feasible and desirable. As used in this text, physical-chemical systems imply a means of treatment in which the removal of pollutants is brought about primarily by chemical clarification in conjunction with physical processes. The process string generally includes preliminary treatment, chemical clarification, filtration, carbon adsorption, and disinfection.

In this section, the basic unit processes are discussed and examples are cited for the treatment of municipal wastewater and potential applications on storm sewer discharges and combined sewer overflows. The inclusion of the municipal wastewater examples is considered necessary because of the very limited data base for operating installations.

INTRODUCTION

Physical-chemical treatment is not a new technology. In fact, chemical precipitation, discovered in 1762, was a well-established method of sewage treatment in England as early as 1870 [18]. Chemical treatment was also used extensively in the United States in the 1890s and early 1900s, but with the development of biological treatment, the use of chemicals was largely abandoned [18]. In the 1930s, a number of physical-chemical systems were evaluated. These systems produced results that were superior to primary sedimentation followed by activated sludge but at a cost of 1.5 to 2 times that of conventional treatment [10].

During the last 12 years, EPA-supported research has advanced physical-chemical treatment technology to the point where it is becoming competitive in cost with biological treatment, especially for situations where significant phosphorus removal is required [14].

Physical-chemical processes are of particular importance in storm flow treatment because of their adaptability to automatic operation (including almost instantaneous startup and shutdown), excellent resistance to shockloads, nonsusceptibility to biological upsets or toxicity, and ability to consistently produce a high-quality effluent.

The most promising combination of unit processes that will produce the desired effluent quality at a reasonable cost appears to be chemical clarification followed by adsorption on activated carbon. Several variations of this scheme, which have been proposed and tested on a pilot scale, are discussed in this section. Other processes that are in the developmental stage but are far from the comparative evaluation stage, are ultrafiltration, sorbent resins, magnetic separation, ultrasonic flocculation, and reverse osmosis [4, 5].

UNIT PROCESSES

The major unit processes utilized in physical-chemical treatment are discussed below. It is emphasized that (1) most of these studies were at pilot-plant scale and (2) all of the investigations were performed under unique local conditions. Even with all of the testing that has been done to date, not enough data are available from prototype facilities to have developed standardized design criteria. Thus, pilot studies should still be performed prior to designing a full-scale installation.

Chemical Clarification

Chemical clarification provides the major portion of the pollutant removal achieved by physical-chemical processes. Raw wastewater, after coarse screening and grit removal, is treated with a coagulating chemical. Chemicals commonly used are lime, iron or aluminum salts, polyelectrolytes, and combinations thereof. Following chemical addition, the wastewater is then allowed to flocculate and settle. The resulting sludge can be dewatered and either disposed of or processed for recovery of chemicals. Lime sludges can be recalcined for lime recovery if this proves economical.

At the present time, there is no rational method for predicting the dose of chemical required. Jar tests are most commonly used for planning purposes. Fortunately, field control of the coagulant dose is possible. The suggested method for controlling chemical dosages is monitoring the turbidity of the clarifier effluent [14]. With lime as the coagulant, however, excellent control is achieved with

pH measurement. Monitoring of phosphorus also appears promising because good clarification is usually obtained when sufficient chemical is added to provide phosphorus removal.

Treatment efficiencies obtained with chemical clarification in pilot plants at various locations are presented in Table 67. In addition to the expected high removals of SS and phosphorus, significant organic removals were obtained. On the basis of these and other data, it can be conservatively estimated that chemical clarification of raw sewage will consistently provide 65 to 75 percent removal of the organics. With this degree of organic removal, the carbon adsorption need provide only a small increment of additional removal to match the performance of a good secondary treatment system [13].

Design criteria for the coagulation equipment are similar to those used in water treatment plants. Generally, these consist of a flash mix of 1 minute, flocculation for 15 to 30 minutes, and sedimentation at upflow rates of 20.35 to 40.7 l/min/sq m (0.5 to 1.0 gpm/sq ft) [14].

Table 67. ACHIEVEMENTS OF CHEMICAL CLARIFICATION [14]

Plant	Chemical	BOD_5 removal, %	SS removal, %	Phosphorus removal, %
Blue Plains, Washington, D.C.	Lime pH 11.5	80	90	95
Ewing-Lawrence Sewage Authority, Trenton, N.J.	170 mg/l ferric chloride	80	95	90
New Rochelle, N.Y.	Lime pH 11.5	80	98	98
Westgate, Va.	125 mg/l ferric chloride	70	--	--
Salt Lake City, Utah	80-100 mg/l ferric chloride	75	--	80

Sludge disposal is a major consideration in the economics of any chemical clarification system. Only limited data are available on the characteristics of sludges resulting from chemical treatment of raw sewage. Typically, the *dry weight* of sludge solids produced by physical-chemical treatment is much greater than that produced by activated sludge--almost twice as much. However, because of better thickening characteristics, the *volume* (wet) may be greater than or less than sludge from conventional processes.

Chemical Recovery

In the case where lime is used as the coagulant, lime recovery by recalcination may be economical. This serves two purposes: (1) the cost of makeup lime is reduced because of partial recovery through recalcination, and (2) ultimate disposal of the organic solids is accomplished because the organics are destroyed by combustion along with the regeneration of lime. This has been successfully demonstrated at the tertiary plant at South Lake Tahoe, California. It was found that no significant saving in chemical cost was accomplished by recalcining the lime sludge but that sludge disposal costs were reduced because only a portion of the lime sludge must be disposed of to prevent buildup of inerts [24].

The recovery of alum has been investigated in one pilot plant study [22]. Alum is recovered by acidifying the thermally regenerated carbon-alumina slurry to a pH of 2.0 prior to recycle for raw sewage treatment. Further studies may prove alum recovery competitive with lime recovery by recalcination.

Recovery schemes for iron sludges have not yet been developed. In the event that an iron recovery system is developed involving incineration, it should be pointed out that the use of fluidized bed furnaces on high iron content sludges has resulted in some operational problems in at least one installation [1]. The primary problems encountered were manifested in failures of the scrubber material and in depositions of solid materials in the reactor duct work and other sections of the scrubber system. It was concluded by the investigators that the presence of high concentrations of iron and chloride in the plant influent due to infiltration (brackish) was the major source of the problems.

Filtration

The unit process of filtration has been previously discussed under physical treatment in Section X. From the standpoint

of a physical-chemical plant, two additional major considerations must be resolved: (1) the location of the filter in the process train and (2) the types and depths of media.

Where granular carbon columns are used, usually it is necessary to locate the filter ahead of packed bed columns to prevent rapid clogging of the column and after expanded bed columns to capture column carryover solids. In powdered carbon systems, a filter usually has to be located at the end of the process to capture solids carryover from the clarifier.

To offset the limitations of surface filtration by single-medium filters (which usually capture the particles within the first inch of filter medium [25]), in-depth filtration by dual-media or tri-media filters has been developed. The intent again is to utilize the full depth of the filter in separating out the solids; thus, the desired gradation in direction of flow is from coarse to fine. To maintain this gradation during backwashing operations, media of different *densities* as well as sizes are required.

It should be recognized that there is no one mixed-media design that will be optimum for all wastewater filtration applications. Small quantities of high-strength biological floc, typically found in activated sludge effluents, may be satisfactorily removed by a good dual-media design, while a weak floc or increased solids loading may best be removed by a mixed, tri-media bed filter. The marked effect that the quality and quantity of the floc to be removed can have on media selection is clearly indicated by the data in Table 68. The data are for raw water treatment plants. From this it can be seen that, in most cases, pilot test of various media designs can be more than justified by improved plant performance.

Data on the performance of several filter systems on municipal sewage are shown in Table 69.

Carbon Adsorption

The role of the carbon adsorption step is to remove soluble organics from the wastewater. Organics removal capacity of carbon is usually expressed in terms of pounds of organics removed (either as COD or TOC) per pound of carbon. For general purposes, a capacity of 0.5 kg of COD per kg (0.5 lb of COD per lb) of granular carbon is reasonable [14]. This is approximately equal to a requirement of 60 mg/l activated carbon (500 lb of activated carbon per million gallons of sewage treated). It must be remembered that this value is

Table 68. ILLUSTRATIONS OF VARYING MEDIA DESIGN FOR VARIOUS TYPES OF FLOC REMOVAL [7]

Location	Type of application	Garnet		Silica sand		Coal	
		Size[a]	Depth, in.	Size[a]	Depth, in.	Size[a]	Depth, in.
Fort St. John, Ore.	Very heavy loading of fragile floc	-40x80	8	-20x40	12	-10x20	22
Buffalo Pound, Ore.	Moderate loading of very strong floc	-20x40	3	-10x20	12	-10x16	15
Peoria, Ore.	Moderate loading of fragile floc	-40x80	3	-20x40	9	-10x20	18

a. Size: -40x80 = passing No.40 and retained on No.80 U.S.sieves.

Note: in. x 2.54 = cm

Table 69. EXAMPLES OF FILTER PERFORMANCE

Location	Scale of installation	Feed	Type of filter	BOD_5, mg/l		COD, mg/l		Total phosphorus, mg/l		Turbidity, JTU[a]		SS, mg/l	
				Inf.	Eff.	Inf.	Eff.	Inf.	Eff.	Inf.	Eff.	Inf.	Eff.
Stanford University [25]	Pilot	Settled secondary effluent	Dual-media	--	--	--	--	--	--	--	--	23.2	1.5
Lake Tahoe [9]	Full	Chemically treated secondary effluent	Tri-media	9	5	23	15	0.65	0.05	7.0	0.3	15	0
Bernards Township [20]	Pilot	Settled trickling filter effluent	Moving bed[b]	65	12	--	--	9.37	0.51	33	7	50	15
Bernards Township [20]	Pilot	Unsettled trickling filter effluent	Moving bed	55	3.8	--	--	19.1	0.99	39	3.4	86	7.1
Bernards Township [20]	Pilot	Primary effluent	Moving bed	67	12	--	--	14.6	1.3	53	3.7	77	11
Bernards Township [20]	Pilot	Raw wastewater	Moving bed	115	19	--	--	21.5	2.16	123	16.7	156	27
Washington, D.C. [20]	Pilot	Chemically clarified raw sewage	Dual-media	--	--	--	--	--	--	--	--	15	4.5

a. Jackson turbidity units.

b. A single-medium filter operating essentially continuously and in a closed loop. See [20].

suggested only as a starting point, since experience shows that the actual requirement varies considerably.

Carbon contacting systems generally employ granular activated carbon. The wastewater is passed either downward or upward through the columns containing the carbon. Downflow columns function as packed beds and additionally accomplish filtration of the wastewater. Flow rates of 1.4 to 5.4 l/sec/sq m (2 to 8 gpm/sq ft) have been used. In this flow range, essentially equivalent adsorption efficiency is obtained from either packed or expanded (upflow) beds when the same contact time is used. At flow rates below 2 gpm/sq ft, adsorption efficiency is reduced, while at flow rates above 8 gpm/sq ft, excessive pressure drop takes place. Contact times ranged from 30 to 60 minutes on an empty bed basis. In general, increases of contact time up to about 30 minutes yield proportional increases in organic removal. At contact times above 30 minutes, the rate of increase falls off; beyond 60 minutes, additional contact time yields no appreciable increase in adsorption [14]. Gravity flow carbon beds are usually designed for operation at the upper end of the flow rate range. A pressure vessel carbon bed is more expensive to construct but requires less land area and provides a greater ability to handle fluctuating flow rates.

Periodic backwashing of the downflow bed must be provided, even if prefiltration is utilized, because suspended solids will accumulate in the bed. Bacterial growth also occurs on the carbon granules and tends to reduce the adsorptive capacity and plug the bed. To assure removal of the gelatinous biological growth, surface wash and air scour should be included in the backwash system.

Backwashing downflow carbon beds effectively relieves clogging but does not completely remove biological growth. Consequently, a significant amount of biological activity is present in the beds at all times leading to the development of anaerobic conditions and the production of sulfides. Aeration of the column feed has been utilized, but this leads to excessive biological growth and subsequent excessive backwash requirements.

To overcome these difficulties, upflow carbon columns have been developed which are operated in a slightly expanded mode (10 to 15 percent expansion). This allows for significant accumulation of biological activity on the carbon granules with little increase in pressure loss. Thus, aerobic conditions which eliminate sulfide generation can be maintained.

Backwash facilities must also be provided for expanded bed systems to remove excess biological growth. The flow rate range used for expanded bed columns is somewhat more restrictive than with packed bed columns. Flow rates above 162.8 to 203.5 l/sec/sq m (4 to 5 gpm/sq ft) are required for the proper degree of expansion of the carbon granule sizes commercially available (2,380 by 545 microns or 1,000 by 370 microns [8 by 30 mesh or 16 by 40 mesh]). In addition, care must be exercised to prevent hydraulic surges that will carry carbon out of the system. When the expanded bed system is used, it must be followed by filtration.

The latest development in activated carbon contacting systems applied to wastewater treatment involves the utilization of powdered activated carbon (particle size less than 74 microns [200 mesh]). This method provides for a mixture of carbon slurry and wastewater in a reactor clarifier. Polymer addition is usually required to achieve a good gravity separation of the carbon from the wastewater following contact. A demonstration application on combined sewer overflows is described later in this section.

Activated Carbon Regeneration

For activated carbon to be more economical, *in situ* regeneration and reuse of the spent carbon should be included in the systems. There are few options available to the designer in the area of regeneration techniques. Regeneration by several means, particularly chemical, has been attempted in the past, but it now appears that the only presently feasible method for destroying the adsorbed organics is thermal regeneration [22, 9, 21]. The usual equipment for thermal regeneration of granular or powdered carbon is either a multiple hearth or the fluidized-bed furnace (as yet untried at full-scale), respectively. Unfortunately, capital costs for thermal regeneration are relatively high. In the case of smaller plants, this may leave only two choices: (1) do not regenerate and use the carbon only once, or (2) construct the furnace and share its use with another physical-chemical plant in the immediate area.

Overall carbon losses of 5 to 10 percent per regeneration cycle are typical for granular activated carbon regeneration utilizing multiple hearth furnaces. At a 10 percent carbon loss per cycle, approximately 5 percent of the original carbon remains after 30 cycles. Because virgin granular carbon costs 53 to 66¢ per kg (24 to 30¢ per pound), considerable savings can be achieved by regeneration. To put regeneration into a recognizable time frame, the Lake Tahoe plant in a 4-1/2-year period of operation between 1965 and 1970, had regenerated the original carbon four times [9].

In a pilot-scale powdered activated carbon regeneration process utilizing a fluidized-bed furnace, overall carbon losses of 2 to 10 percent per regeneration cycle were reported [22]. Even though virgin powdered carbon costs less than granular carbon, 18 to 22¢ per kg (8 to 10¢ per pound), considerable savings are possible with regeneration. It has also been demonstrated that thermally regenerated activated carbon (both granular and powdered) has essentially the same adsorptive capacity as the virgin carbon.

PERFORMANCE OF PHYSICAL-CHEMICAL SYSTEMS

Operational and design data are available on one full-scale and several pilot-scale physical-chemical treatment systems. One pilot study, in Albany, New York, operated both on combined sewer overflows and municipal sewage. This study is described in detail in the next subsection. The remaining systems operated exclusively on municipal sewage feed with various levels of pretreatment. Average operating and performance data for each of the systems are shown in Tables 70 and 71, respectively. A brief description of the major systems follows.

Table 70. OPERATING DATA OF PHYSICAL-CHEMICAL TREATMENT PLANTS FOR VARIOUS CITIES

Location	Scale of installation	Type of feed	Design flow	Chemicals added		Filters		Activated carbon		
				Coagulant, mg/l	Filter aid, mg/l	Type	Loading gpm/sq ft	Type	Carbon dosage lb/mil gal.	Loading gpm/sq ft
South Lake Tahoe, Calif. [9]	Full	Settled secondary effluent	7.5 mgd	Lime, 400; polymer, 0.25	Alum, 1-20; polymer, 0.01-0.10	Tri-media	5.0	Granular, pressure upflow	250	6.4
Ewing-Lawrence Sewage Authority, Trenton, N.J. [12]	Pilot	Primary effluent	0.08 mgd	Ferric chloride, 170	--	Dual-media	1.8	Granular, expanded-bed	190	5.0
Rocky River, Ohio [23]	Pilot	Raw sewage	0.007 mgd	Polymer, 0.3	--	--	--	Granular, gravity packed-bed	500	4.0
Washington, D.C. [2]	Pilot	Weak raw sewage	.1 mgd	Lime, 350; ferric hydroxide, 5	--	Dual-media	3.0	Granular, gravity packed-bed	--	7.0
Dallas, Tex. [13]	Pilot	Primary effluent	1 mgd	Lime, 350	--	Multi-media	3.0	Granular	--	--
Pomona, Calif. [19]	Pilot	Settled secondary effluent	0.3 mgd	--	--	--	--	Granular	350	7.0
Albany, N.Y. [22][a]	Pilot	Combined sewer overflow	0.1 mgd	Alum, 200; lime, 190	Polymer	Tri-media	5.0	Powdered	1,700-5,000	--

a. Alum recovered by acidification with sulfuric acid at a dosage of 0.6 lb/lb carbon.

Note: lb/mil gal. x 0.120 = mg/l
gpm/sq ft x 0.679 = l/sec/sq m
mgd x 43.8 = l/sec

Table 71. PERFORMANCE DATA OF PHYSICAL-CHEMICAL TREATMENT PLANTS FOR VARIOUS CITIES

Location	BOD_5, mg/l			COD, mg/l			Total organic carbon, mg/l			SS, mg/l			Phosphorus, mg/l		
	Inf.	Eff.	%	Inf.	Eff.	%	Inf.	Eff.	%	Inf.	Eff.	%	Inf.	Eff.	%
South Lake Tahoe, Calif. [9][a]	30	1	97	40	10	75	--	--	--	26	0	100	6	0.1	98
Ewing-Lawrence Sewage Authority, Trenton, N.J. [12][b]	52	5	90	--	--	--	46.3	4.3	91	62	9	85	30	3	90
Rocky River, Ohio [23][c]	118	8	93	235	44	81	52	13	75	107	7	94	--	--	--
Washington, D.C. [2][d]	127	5.4	96	308	12.8	96	100	6.0	94	161	4.3	97	8.5	0.14	98
Dallas, Tex. [13][e]	45	3	93	117	29	75	34	9	74	41	5	88	11.9	0.1	99
Pomona, Calif. [19][f]	--	--	--	47	9.5	80	13.0	2.5	85	10	1	90	--	--	--
Albany, N.Y. [22][g]	100	6.0	94	383	23	94	--	--	--	420	4.2	99	--	--	--

	Nitrogen, mg/l			Methylene blue active substance			Coliforms, MPN/100 ml			Turbidity, JTU[h]		
	Inf.	Eff.	%	Inf.	Eff.	%	Inf.	Eff.	%	Inf.	Eff.	%
South Lake Tahoe, Calif. [9][a]	25.5	0.6	98	2.0	0.1	95	2.5×10^6	50	99^+	50	0.3	99^+
Ewing-Lawrence Sewage Authority, Trenton, N.J. [12][b]	--	--	--	--	--	--	--	--	--	35	1.5	96
Rocky River, Ohio [23][c]	--	--	--	--	--	--	--	--	--	--	--	--
Washington, D.C. [2][d]	21.2	4.5	79	--	--	--	--	--	--	--	--	--
Dallas, Tex. [13][e]	6.4	2.5	61	--	--	--	60×10^5	9	99^+	9	0.8	91
Pomona, Calif. [19][f]	6.7	3.7	45	--	0.4	--	--	--	--	10.3	1.6	85
Albany, N.Y. [22][g]	--	--	--	--	--	--	--	--	--	--	1.0	--

a. Nitrogen removed as ammonia by air stripping.
b. No filter after expanded-bed carbon columns, phosphorus removed as phosphate.
c. No filtration or phosphorus removal.
d. Nitrogen removed as total nitrogen by ion exchange.
e. Nitrogen removed as ammonia; phosphorus removed as total phosphorus.
f. Nitrogen removed as nitrate by volunteer denitrification.
g. No phosphorus removed (see text for explanation).
h. Jackson turbidity unit.

South Lake Tahoe, California [9]

This is a full-scale 328.5 l/sec (7.5 mgd) plant utilizing physical-chemical treatment as a tertiary step for upgrading the biological plant effluent. The secondary effluent is first dosed with recalcined lime (sometimes alum) at rates up to 400 mg/l and rapid-mixed for 1 minute, followed by 5 minutes of air-agitated flocculation. Polymer is then added prior to clarification (0.25 mg/l). The chemically clarified effluent passes through an ammonia stripping tower, is recarbonated, and then is filtered by tri-media filters. After filtration, the effluent is run through pressure upflow granular carbon columns followed by chlorination prior to discharge. Carbon and lime are regenerated and recalcined, respectively, in separate multiple hearth furnaces.

Ewing-Lawrence Sewerage Authority, Trenton, New Jersey [12]

This pilot plant was established primarily to compare the performance of expanded bed and packed bed activated carbon adsorption systems in the direct physical-chemical treatment of raw sewage and/or primary effluent.

The feed wastewater used throughout the study was first dosed with ferric chloride, followed by rapid mixing, followed by two-stage slow mixing flocculation. The flocculated effluent then was clarified in an upflow clarifier followed by dual-media gravity filtration. The filtered wastewater was then pumped to a storage tank for feeding to the carbon adsorbers. A flow diagram of the pilot-plant clarification system used in this study is shown on Figure 64.

One important aspect of this pilot study was that the entire system was designed for essentially automatic operation. A technician visited the plant daily to take samples, adjust flows, and perform routine maintenance. Few problems were reported after shakedown, demonstrating that ease of automation is one strong argument in favor of physical-chemical plants over biological plants, particularly in the case of treating storm flows.

Rocky River, Ohio [23]

This pilot-plant study was performed to provide design data for a 438-l/sec (10-mgd) physical-chemical plant for Cuyahoga County, Ohio. The decision to upgrade the existing primary plant by addition of a phyical-chemical plant, rather than by a conventional secondary plant, was prompted by extremely limited land space and the fact that the construction costs were estimated to be substantially lower.

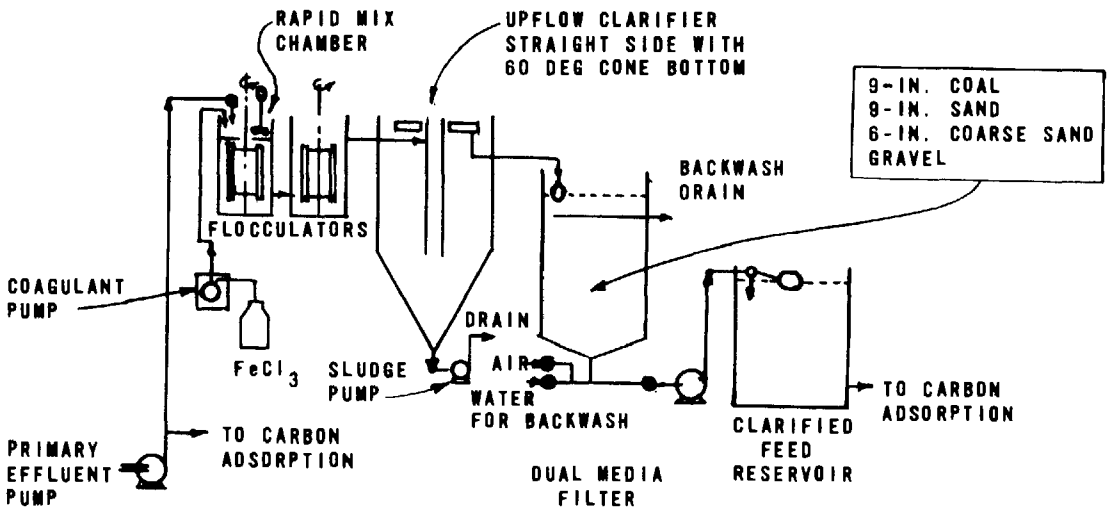

Figure 64. Flow diagram of clarification system [12]

Raw sewage was chemically clarified using a polymer. No additional chemical treatment for further coagulation or phosphorus removal was applied. The clarified wastewater (approximately 50 mg/l SS) was then fed to a four-stage gravity flow granular activated carbon column system. The carbon columns served the dual purpose of filtration and adsorption. Overall system average removals were better than those from most secondary treatment plants.

Washington, D. C. [2]

This study of physical-chemical treatment of raw sanitary wastewater was conducted at a pilot plant in Washington, D. C. The plant was operated jointly by the EPA and the District of Columbia. Figure 65 is a flow diagram of the pilot plant used in this study. The automated pilot system consists of cyclone degritting, two-stage (high-pH) lime precipitation (for high phosphorus removals) with intermediate recarbonation, dual-media filtration, pH control, selective ion exchange (for ammonia removal), and downflow granular activated carbon adsorption. Overall, the physical-chemical treatment produced very consistent removals of organics and demonstrated high operational stability.

Dallas, Texas [13, 15]

This 43-l/sec (1-mgd) pilot plant, located at the Dallas Water Reclamation Research Center, is being jointly studied

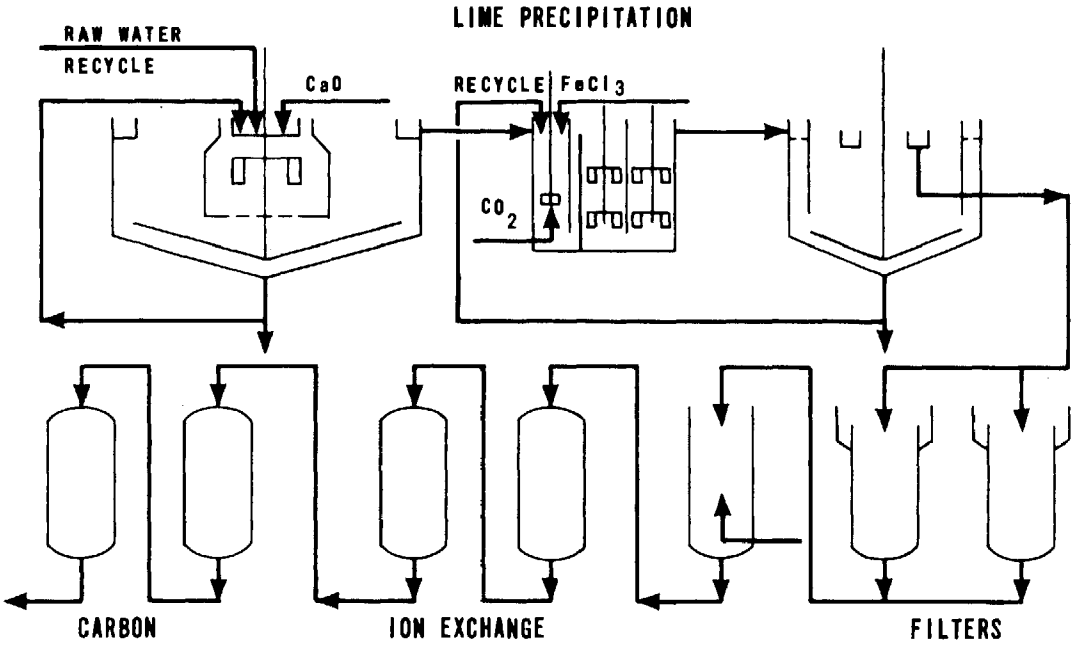

Figure 65. Physical-chemical treatment pilot plant [2] Washington, D.C.

at the present time by the EPA, the Dallas Water Utilities Department, and the Civil Engineering Department of Texas A&M University. The plant consists of two complete mix activated sludge systems (aeration basins and final clarifier), a chemical treatment module, two filters, two activated carbon contactors, two chlorine contact basins, two small oxidation ponds, and the necessary chemical feed equipment. The plant is quite flexible and offers the opportunity to evaluate many different sequences of unit processes. Influent to the pilot plant comes from a wastewater treatment plant (two-stage high-rate trickling filter) and is available from any point in the process sequence.

Pomona, California [19]

The Pomona study was one of the first field applications of carbon adsorption in the United States and has been on-line since 1965. The plant is jointly operated by the EPA and the Sanitation District of Los Angeles County. The purpose of the pilot-plant study was to provide a simple and reliable adsorption system that would be capable of receiving and

removing suspended solids from an activated sludge plant effluent. The design features a four-stage packed bed pressure downflow granular activated carbon column and includes a thermal carbon regeneration process.

STORM FLOW APPLICATIONS

Whereas several combined sewage treatment demonstration projects have evaluated the benefits of chemical aids to process operations, only one pilot operation representing a complete physical-chemical treatment system has been implemented. This project and two representative planning studies are discussed in this subsection.

Again, the feasibility of multiprocess physical-chemical systems in storm flow applications will largely depend on the effluent quality objectives, the degree of preunit flow attenuation, and the ability to maximize the use of the facilities between storms. These aspects are well demonstrated in the following projects.

Albany, New York [22]

In this project, raw municipal sewage and combined sewer overflows were contacted with powdered activated carbon to remove dissolved organics. Alum was then used to aid in subsequent clarification. Addition of polyelectrolyte was followed by a short flocculation period. Solids were separated from the liquid stream by gravity settling, and the effluent was then disinfected and discharged or filtered prior to discharge. A process flow sheet is shown on Figure 66.

The pilot plant was composed of two major systems: a liquid treatment system and a carbon regeneration facility. The liquid treatment system was housed almost entirely in a 40-foot trailer van. The major components are: (1) a surge tank, (2) a pipe reactor and static mixers, (3) chemical addition equipment, (4) flocculation chambers, (5) tube settler, (6) a tri-media filter, and (7) a centrifuge for sludge dewatering.

A solid bowl centrifuge is used to dewater sludge which is then stored in a holding tank for subsequent pumping to the carbon regeneration facility. The carbon sludge was readily dewaterable. After some operation experience, it was found that (1) rapid mixing of the dewatered sludge reduced its viscosity rendering it more pumpable, and (2) the addition of the same polymer used in the waste treatment process to the sludge at a dosage of 1 kg/1,000 kg (2 lb/ton) of dry

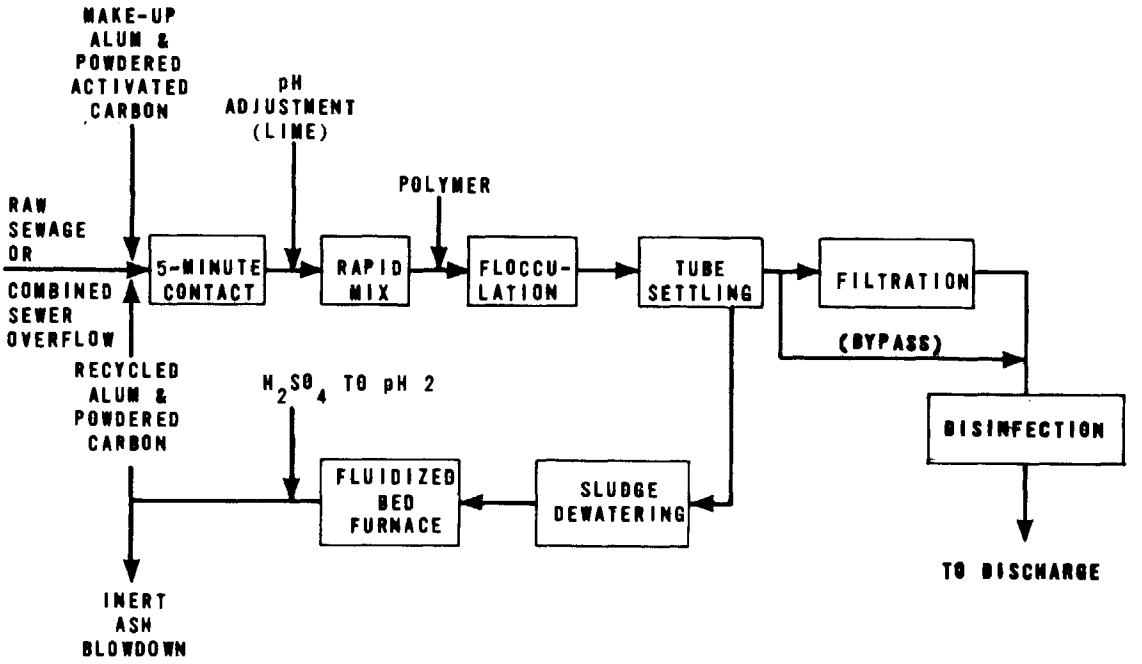

Figure 66. Process flow sheet for physical-chemical pilot plant [22] Albany, New York

solids increased the solids capture from 20 to 95 percent. It was also found that sludge more than 2 to 3 days old required polymer doses as high as 2 kg/1,000 kg (4 lb/ton) to achieve the same 95 percent solids capture in the centrifuge.

The carbon-alumina sludge is thermally regenerated in a fluidized inert sand bed [26]. The regenerated carbon-alumina slurry is collected in storage tanks. After collection, the slurry is acidified with sulfuric acid to reclaim the alum before reuse in the system. Makeup alum and carbon are added at the same time. Average carbon losses per regeneration cycle were 9.7 percent. Approximately 91 percent of the alum can be recovered by acidification of the carbon-alumina slurry after thermal regeneration of the carbon sludge. Even after seven regeneration cycles, the adsorption performance of the carbon was essentially that of virgin carbon.

Two types of sewage were studied, combined sewer overflows and municipal sewage, but only the combined sewer overflow portion of the study will be of concern in this text.

Nine storm events occurred during the pilot-plant study period. These ranged in duration from 2 to 7 hours. The amounts of total rainfall during a single storm ranged from 0.13 to 2.87 cm (0.05 to 1.13 inches).

Powdered carbon dosages ranged from 500 to 1,300 mg/l during the storm events. When compared to carbon dosages for treating primary or secondary effluent, these values at first appear to be extremely high. Rough calculations of pounds of COD removed per pound of carbon used for overall treatment show an average of 1.1 kg of COD removed per kilogram of carbon used (1.1 lb COD per pound of carbon), which is considerably higher than that for granular carbon.

Attempts to match the pilot-plant flow variation to the combined sewer flow variations were not completely successful. However, during a storm, the pilot-plant flow, initially 2.2 l/sec (35 gpm), was increased to 4.7 l/sec (75 gpm) in a period of less than 2 minutes during the peak storm loading, with no observable effluent quality degradation or operational upsets. Thus, it appears that plant performance is highly insensitive to rapid changes in flow rates if chemical feed rates are rapidly adjusted to correspond to the increased flow. This is a strong point in favor of physical-chemical treatment of storm flows. During the peak pollutant loadings of these storms, the effluent quality remained essentially unaffected.

Some advantages of a powdered carbon system over a granular carbon system are: (1) the carbon dosage can be varied with the strength of the influent waste stream; (2) fluidized bed furnaces can be used for regeneration and they are simpler to operate and maintain than multiple hearth furnaces; (3) granular carbon columns and their attendant sophisticated piping systems, including backwashing facilities, are eliminated; and (4) overall, a powdered carbon system is simpler to operate and maintain.

One major disadvantage of a powdered carbon system is that phosphorus removal is greatly reduced when compared to granular carbon systems. This results from the acidification step for alum recovery. Acidification redissolves the aluminum hydroxide releasing the alum for reuse in coagulation. Unfortunately, acidification also redissolves phosphate, thus recycling it to the effluent. Hence, the only phosphorus removal is accomplished by blowdown of the regenerated carbon-alum stream. This amounts to a phosphorus removal of about 31 percent when 5 percent blowdown occurs.

San Francisco, California [3]

The San Francisco City engineering staff has recommended physical-chemical treatment as the most suitable treatment process to manage its total wastewater system. The conceptualized plant would be built according to a building block type construction method, allowing split flow integration of dry- and wet-weather facilities. The split flow option will permit variable degrees of treatment depending on the volume of inflow. The building block method permits construction to proceed on a smaller increment basis to keep pace with the development and construction of the automated combined sewer collection/storage system (see Section XIV).

Three levels of treatment would be provided. Level 1 would handle up to 43,808 l/sec (1,000 mgd) while sequential Levels 2 and 3 could handle up to 25 percent of this maximum inflow.

As conceived, the Level 1 physical-chemical treatment process includes bar screens, grit chambers, chemical sedimentation with ferric chloride and polymers, and chlorination and dechlorination. Add-on Level 2 treatment includes high dose lime chemical sedimentation, subsequent recarbonation, and lime recalcination. Finally, add-on Level 3 includes superchlorination or, alternatively, ammonia stripping, dual-media filtration, and carbon adsorption.

Estimated removal efficiencies for the overall system, taking into account flow splitting and overflow, are 90 percent COD, 98 percent SS, 85 percent total nitrogen, 93 percent total phosphorus, 90 percent hexane extractable material, and 95 percent floatables.

As San Francisco is sewered on the combined plan, this dual-use treatment prospect offers excellent potential for maximizing both dry- and wet-weather performance.

Kingman Lake, Washington, D. C. [6]

This conceptual engineering study involved the investigation of the reclamation of combined sewer overflows and utilization of the reclaimed waters in a major water-oriented recreation facility. The treatment process selected to follow a large combined sewer overflow storage reservoir was a total physical-chemical system including chemical clarification, filtration, carbon adsorption, disinfection, and carbon regeneration. To increase the beneficial use of the facilities, lake water would be directly processed and recycled in

the periods between storms. Lake quality suitable for boating and fishing is expected in one segment and suitable for swimming in a second. This project is described further in Section XIV.

COSTS OF PHYSICAL-CHEMICAL TREATMENT

Representative capital and operation and maintenance costs projected from data developed within each project are summarized in Table 72, along with a description of what is believed to be included. Note that the operation and maintenance costs presume continuous year-around operation. Much higher unit costs would therefore be expected for intermittent storm operations. The wide variations in both systems and projected costs emphasize the requirement for independent estimates for each particular installation.

Table 72. ESTIMATED CAPITAL AND OPERATION AND MAINTENANCE COSTS FOR TYPICAL PHYSICAL-CHEMICAL TREATMENT PLANT

Location	Capital costs, $			Operation and maintenance costs, ¢/1,000 gal.			Definition of costs
	10 mgd	25 mgd	100 mgd	10 mgd	25 mgd	100 mgd	
Hypothetical CAST[a] [11]	4,822,000	9,680,800	28,330,500	9.7	7.1	5.3	See definition 1
Hypothetical PCT[b] [8]	6,656,000	13,409,000	42,379,000	16.3	13.4	10.3	See definition 2
South Lake Tahoe, Calif. [9]	4,870,300	9,907,400	29,010,600	13.0	10.8	8.6	See definition 3
Ewing-Lawrence Sewage Authority, Trenton, N.J. [12]							
Packed bed	3,548,700	7,218,900	21,138,300	12.8	10.6	8.0	See definition 4
Expanded bed	3,411,900	6,940,600	20,323,400	12.3	10.2	8.0	See definition 5
Washington, D.C. [2]	27,065,700	55,060,700	161,227,200	31.4	26.0	19.6	See definition 6
Rocky River, Ohio [23]	2,416,000	4,914,700	14,391,200	3.0	2.5	1.9	See definition 7
Pomona, Calif. [19]	2,942,700	5,986,200	17,528,600	4.2	3.5	2.6	See definition 8
Albany, N.Y. [22]	1,791,300	3,643,900	10,670,100	18.8	15.6	11.7	See definition 9

a. CAST = conventional activated sludge treatment (for comparison only).

b. PCT = physical-chemical treatment

Note: mgd x 43.808 = l/sec
¢/1,000 gal. x 0.264 = ¢/1,000 l

For definition of costs, see page 325.

Table 72 (Continued)

Definition of costs

1. Capital costs include raw wastewater, primary sludge, and recirculation pumping; screening, grit chambers, primary and secondary clarifiers; diffused air aeration; chlorination feed system and contact basins; vacuum filtration; sludge incineration; administration and laboratory facilities; garage and shop facilities; yardwork; interest during construction, land, legal, administrative; and engineering. Operation and maintenance costs include all materials, supplies, and labor.
2. Capital costs include two-stage lime clarification, dual-media filtration, ammonia stripping, granular carbon adsorption, and lime recalcination. Unknown whether pretreatment and chlorination are included.
3. Capital costs include coagulation chemicals addition systems, flash mixing, flocculation, phosphorus removal, ammonia stripping, recarbonation, multi-media filtration, granular activated carbon adsorption, chlorination, recalcination, and carbon regeneration. Operation and maintenance costs include all materials and labor. The PCT is preceded by a complete activated sludge treatment system. Costs for general facilities are not clearly serparated into CAST and PCT components.
4. Capital costs include aerated grit chambers, flocculation, clarifier, sludge thickener, drum filter, two-stage packed bed activated carbon contactors, combined duty multi-hearth furnace for recalcination and incineration of clarifier sludge, carbon storage, multi-hearth carbon regeneration furnace, all piping, foundations, roads, fences, instrumentation, pumps, buildings, utilities, and engineering. Operation and maintenance costs include all materials and labor. The cost analysis is for the treatment of raw sewage; chlorination and nitrogen removal systems are excluded.
5. Capital and operation and maintenance costs include the above except that the carbon contactors are the expanded bed type.
6. Capital costs include bar screens, cyclone degritting, two-stage high-pH lime treatment, dual-media filtration, ion exchange and regeneration, carbon adsorption, recalcination, recarbonation, sludge disposal, and complete automation of the plant. Operation and maintenance costs include fuel, electricity, materials, and labor. Costs are scaled from a 13,140-l/sec (300-mgd) PCT plant cost estimate. At first glance the estimated costs seem extremely high until it is considered that (1) this is a complete PCT plant designed for treating raw sewage; (2) application of PCT to a plant of this scale has no precedent; (3) ion exchange regeneration by air stripping requires expensive heating during the winter months; and (4) other independent studies generated similar estimated costs [17, 16].
7. Capital costs include only an add-on granular activated carbon column process and the building for it without carbon regeneration. Operation and maintenance costs include only the add-on activated carbon process materials and labor. Existing facilities to be utilized for pretreatment consist of chemical coagulation, settling, and chlorination.
8. Capital costs include only gravity packed bed granular activated carbon adsorption columns and a carbon regeneration system. Operation and maintenance costs include only labor and make-up carbon. Process is designed to handle secondary process effluent, not raw sewage.
9. Capital costs include screens, grit chambers, overflow facilities, pipe reactor vessels, pumps, chemical storage, carbon slurry tanks, sludge storage, agitators, flocculators, tube settlers, filtration, chlorination, carbon regeneration/sludge incineration, fluidized bed furnace, chemical make-up system, 10 percent contingencies, and land. Operation and maintenance costs include all materials, power, and labor. Plant is designed for raw stormwater treatment.

Section XIII

DISINFECTION

Three categories of human enteric organisms of the greatest consequence in producing disease are bacteria, viruses, and amoebic cysts. Typical waterborne bacterial diseases are typhoid, cholera, paratyphoid, and bacillary dysentery. Diseases caused by waterborne viruses include poliomyelitis and infectious hepatitis.

Disinfection refers to the selective destruction of pathogenic microorganisms. Generally, not all of the organisms are destroyed during the process. Viruses, cysts, and bacterial spores are the most hardy.

AGENTS AND MEANS

In the field of wastewater treatment, the most common methods for accomplishing disinfection are through the use of:

1. Chemical oxidizing agents
2. Physical agents
3. Mechanical means
4. Radiation

In applying the disinfection agents or means, the following factors must be considered: (1) contact time, (2) concentration and type of chemical agent, (3) intensity and nature of physical agent, (4) temperature, (5) numbers of organisms, (6) types of organisms, and (7) nature of the suspending liquid. Typical removal efficiencies for various treatment processes are reported in Table 73.

Chemical Agents

The requirements for an ideal chemical disinfectant and the characteristics of the most commonly used chemical

Table 73. REMOVAL OR DESTRUCTION OF BACTERIA BY DIFFERENT WASTEWATER TREATMENT PROCESSES

Process	Removal, %
Physical	
Coarse screens	0-5
Fine screens	10-20
Grit chambers	10-25
Plain sedimentation	25-75
Chemical precipitation	40-80
Mechanical	
Trickling filters	90-95
Activated sludge	90-98
Chemical oxidation	
Chlorination of treated sewage	98-99

disinfectants are listed in Table 74. Although no such ideal compound has been found, these requirements should be considered in evaluating proposed or recommended disinfectants.

Chemical agents used for disinfection include chlorine gas or liquid, sodium or calcium hypochlorite, ozone, bromine, and iodine. Chlorine dioxide is being evaluated as a disinfectant in two current EPA-sponsored demonstration projects.

Chlorine — The common sources of chlorine for use in disinfection are (1) liquified chlorine gas, (2) sodium or calcium hypochlorite, and (3) electrolytic generation.

Chlorine gas — Liquified chlorine gas is available in 45- to 68-kg (100- to 150-lb) cylindrical containers, 907-kg (1-ton) containers, and 1,450- to 4,980-kg (16- to 55-ton) railroad tank cars. In most cases, liquified chlorine gas is delivered to the plant site by truck or railroad. It is extremely

Table 74. COMPARISON OF IDEAL AND ACTUAL CHEMICAL DISINFECTANT CHARACTERISTICS[a]

Characteristic	Ideal disinfectant	Chlorine	Sodium hypochlorite	Calcium hypochlorite	Chlorine dioxide	Ozone
Toxicity to microorganism	Should be highly toxic at high dilutions	High	High	High	High	High
Solubility	Must be soluble in water or cell tissue	Slight	High	High	High	High
Stability	Loss of germicidal action on standing should be low	Stable	Slightly unstable	Relatively stable	Unstable, must be generated as used	Unstable, must be generated as used
Nontoxic to higher forms of life	Should be toxic to microorganisms and nontoxic to man and other animals	Highly toxic to higher life forms	Toxic	Toxic	Toxic	Toxic
Homogeneity	Solution must be uniform in composition	Homogeneous	Homogeneous	Homogeneous	Homogeneous	Homogeneous
Interaction with extraneous material	Should not be absorbed by organic matter other than bacterial cells	Oxidizes organic matter	Active oxidizer	Active oxidizer	High	Oxidizes organic matter
Toxicity at ambient temperatures	Should be effective in ambient temperature range	High	High	High	High	Very high
Penetration	Should have the capacity to penetrate through surfaces	High	High	High	High	High
Noncorrosive and nonstaining	Should not disfigure metals or stain clothing	Highly corrosive	Corrosive	Corrosive	Highly corrosive	Highly corrosive
Deodorizing ability	Should deodorize while disinfecting	High	Moderate	Moderate	High	High
Detergent capacity	Should have cleansing action to improve effectiveness of disinfectant	--	--	--	--	--
Availability	Should be available in large quantities and reasonably priced	Low cost	Moderately low cost	Moderately low cost	Moderate cost	High cost

a. Adapted from Reference 11.

toxic and must be handled with due care and adequate safeguards. It may be introduced either directly into water through diffusers or dissolved in a small flow of water and carried as a solution to the point of application. Because the gas may escape through the water in a direct feed application, solution feed is preferable.

Hypochlorite – Hypochlorite is being used increasingly because it is safer than chlorine gas. It is available as either calcium hypochlorite or sodium hypochlorite.

Calcium hypochlorite is available in either dry or wet form. High-test calcium hypochlorite contains 70 percent available chlorine. The dry form (powder or granules) is more stable, but feeding the dry form is usually more costly and more difficult to control.

Sodium hypochlorite solution is the form of hypochlorite used most often. It is available in concentrations from 5 to 15 percent; 30 percent is maximum. The solutions decompose more rapidly at high concentrations and are affected by exposure to light and heat. They must therefore be stored in a cool location in corrosion-resistant tanks (such as PVC-lined steel or fiber glass).

When large quantities of hypochlorite are needed, attention has been given to on-site generation. Two methods are currently in use for on-site hypochlorite generation. In the first, sodium hydroxide and chlorine are reacted to form sodium hypochlorite. Such a plant, discussed in detail later in this section, was constructed in New Orleans, Louisiana. The second method of on-site hypochlorite generation is electrolysis of a sodium chloride brine solution.

One currently available process, developed by constructors John Brown Limited (C.J.B.) of Great Britain, involves the electrolysis of a combined flow of sewage and sea water at a ratio of 20:1 for in situ hypochlorite generation. The system will produce "equivalent hypochlorite concentration of 80 ppm." In the United States a prototype plant for on-site electrolytic hypochlorite generation from brine was constructed for the Somerville Marginal Conduit Pretreatment Facility described later in this section.

Chlorine dioxide – Chlorine dioxide (ClO_2) is a good bactericide at high pH values, but it decomposes rapidly (1 to 2 days) and is usually manufactured where it is to be used. This is normally accomplished by mixing solutions of sodium chlorite and chlorine in a reaction chamber. The resulting chlorine dioxide has an oxidizing ability nearly as high as hypochlorous acid, but does not react with ammonia to form chloramines, and will oxidize phenols without the formation of chlorophenols which affect taste and odor. Until recently, the lack of a satisfactory test for residual chlorine dioxide in the presence of residual chlorine has hindered its application in water and wastewater treatment. Its chief disadvantage, however, is that it costs more than other chlorine compounds. It also is explosive and picks up metal contaminants if held in contact with metal parts.

Ozone – Ozone is an allotropic form of oxygen with powerful oxidizing and disinfecting properties. It is about twice as potent as chlorine and has much shorter reaction times. It is very unstable, however, and requires on-site production because its half-life before breaking down to normal oxygen is measured in minutes. In water, it is difficult to obtain residuals after longer than 5 to 10 minutes. Of the many methods for producing ozone, the most practical for large-scale use is the electrical corona-discharge method.

As a disinfectant, ozone has the following advantages compared with chlorine:

1. Ozone is a more rapid and stronger oxidant than chlorine. Ozone also is much more effective against viruses.

2. Ozone is more effective in eliminating odor-causing compounds in water, such as phenols and amines. Chlorination merely converts these to compounds that are more amenable to oxidation, and the trend toward recycling and reusing water will intensify this problem.

3. The ozonation process introduces considerable amounts of air or oxygen into the waste, thus increasing the dissolved oxygen content of the receiving stream.

4. Ozone acts almost instantaneously (600 to 3,000 times more rapidly than chlorine) so shorter contact times are needed. It is only slightly affected by changes in temperature and pH.

5. No chloramine or chlorinated hydrocarbons, which can have toxic effects on aquatic life, are produced.

6. Ozone also oxidizes soluble organics.

The disadvantages associated with ozone are as follows:

1. Capital costs for ozone production equipment are relatively high.

2. Ozone is generally thought of as a dangerous substance.

3. The lack of a measurable residual makes it difficult to monitor the application rate.

4. To disinfect with ozone effectively, as with chlorine, SS reduction is of prime importance.

Ozone may be produced from either pure oxygen or air. The theoretical limit for ozone generation from pure oxygen is about 8 percent; the practical limit is about 6 percent. From air, the concentrations are approximately 2 percent and 1 percent, respectively. It takes about 50 kg (110 lb) of oxygen to produce 1 kg (2.2 lb) of ozone. For this reason, pure oxygen used to generate the ozone is recycled to

the generator. If air is used, there is no need for recycling.

Other Chemical Agents – Other chemical agents used in disinfection include bromine, iodine, fluorine, and potassium permanganate.

When bromine is used as a disinfectant, it is usually used for swimming pool disinfection. McKee [10] has shown that to achieve a 99.995-percent kill of coliforms in sewage at Pasadena, California, required about 45 mg/l of bromine (or iodine) but only 8 mg/l of chlorine. Bromine chloride, another chemical agent, acts like bromine but does not form persistent amines.

Iodine has high bactericidal effectiveness, a more stable residual than chlorine, and is not affected as much by pH. On a weight basis, it kills more viruses in a wide range of natural water than either chlorine or bromine, because inhibitory amines are not formed with iodine. At the present time, however, elemental iodine is not competitively priced at $2.86/kg ($1.30/lb).

Fluorine has been found too reactive to store and apply easily. Potassium permanganate is expensive and imparts a color that must be removed after using. Also, the pH for its most effective use is higher than the pH in most stormwaters and combined sewer overflows.

Physical Agents

Physical disinfectants that can be used are solids separation, heat, and radiation. Ultraviolet light has been used successfully for the sterilization of small quantities of water.

Ultraviolet Light – To ensure disinfection by ultraviolet light, the water must be relatively free of suspended matter that might shade the organisms against the light and the water depth must be shallow for adequate light penetration. Time and exposure intensity are also important. One hundred microwatts per square centimeter of 2,537 Angstrom light will produce high bacteria kills at a contact time of less than 1 minute [14]. Use of ultraviolet light for disinfection has found limited application probably because other methods are more economical. An example of an ultraviolet light arrangement for disinfection is shown in Figure 67.

Heat – Heating water to the boiling point will destroy the major disease-producing, nonspore forming bacteria. Heat is commonly used in the beverage and dairy industry, but it is

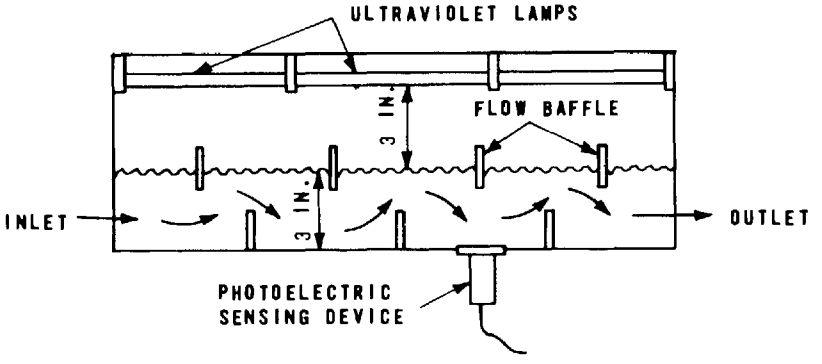

Figure 67. Ultraviolet light used as a method of disinfection

not a feasible means of disinfecting large quantities of combined sewer overflows or storm sewer discharges because of the high cost.

Mechanical Means

Bacteria are also removed by mechanical means during sewage treatment, by such processes as trickling filters and activated sludge. These processes, when applied to combined sewer overflows, also will remove bacteria. Additional mechanical means for removing bacteria from combined sewer overflow include microscreening; sand, dual-media and multi-media filtration; and carbon adsorption.

Gamma Radiation

The major types of radiation are electromagnetic, acoustic, and particle. Because of their penetrating power, gamma rays have been used to disinfect wastewater.

COMBINED SEWER OVERFLOW AND STORM SEWER DISCHARGE DISINFECTION

Conventional municipal sewage disinfection generally involves the use of chlorine gas or sodium hypochlorite as the disinfectant. To be effective for disinfection purposes, a contact time of not less than 15 minutes at peak flow rate and a chlorine residual of 0.2 to 2.0 mg/l are commonly recommended.

Where storm sewer discharge or combined sewer overflow disinfection is concerned, a different approach is required

mainly because such flows have characteristics of intermittent, high flow rate and high SS content, wide range of temperature variation, and variable bacterial quality. Current research on storm sewer discharge and combined sewer overflow disinfection techniques include such aspects as:

1. Application of high-rate (rapid-oxidizing) disinfectants.

2. Application of increased concentrations of disinfectants.

3. Use of various alternative disinfectants.

4. On-site generation of disinfectants to reduce the unit cost and counteract concentration decay during storage.

High-rate disinfection refers to achieving either a given percent or a given bacterial count reduction through the use of (1) decreased disinfectant contact time, (2) increased mixing intensity, (3) increased disinfectant concentration, (4) chemicals having higher oxidizing rates, or (5) various combinations of these.

Chlorination

Chlorination is the most commonly used and usually the most economical method of disinfection. Although chlorine gas is inexpensive, it is extremely hazardous. Moreover, it is available in a limited range of container sizes and these containers must be moved to the point of use. For this reason, it is undesirable to use chlorine gas for disinfection at locations that are not staffed continuously or that are accessible to the public.

Factors Affecting Disinfection by Chlorination – The extent of disinfection by chlorination is a function of (1) chlorine residual, (2) contact time, (3) mixing intensity, (4) chlorine demand, (5) nature and concentration of protective suspended solids, (6) pH, and (7) temperature. The first and last two parameters pertain to the chemical form and activity at which the disinfecting agent exists.

Contact time and mixing intensity – Contact time deals with the opportunity for destruction. Until recently, there has been little information on the effect of mixing intensities. Collins, Selleck, and White [3] have shown clearly the magnitude and influence of mixing intensity by the comparison of bacterial kills for two different mixing intensities, one from a tubular reactor and one from a stirred reactor.

Velocity gradient was first proposed by Camp and Stein to explain flocculation rates [2]. Glover further suggested the use of velocity gradient as a measurement of the mixing intensity [8].

$$G = \frac{1,730}{\sqrt{\mu}} \sqrt{VS}$$

where G = velocity gradient, sec^{-1}

μ = viscosity, centipoise

V = velocity, ft/sec

S = slope, ft/ft

From the Manning's Equation for flow in open channels

$$S = V^2 \left(\frac{n}{1.49}\right)^2 \left(\frac{1}{R}\right)^{4/3}$$

where S = slope, ft/ft

V = velocity, ft/sec

n = roughness factor

R = hydraulic radius, ft

Since the velocity gradient increases proportionally with n, Glover suggested and designed a contact basin incorporating parallel corrugated baffles. These baffles act to increase n value, causing flow turbulence. Limited test results indicated that by using corrugated baffles within the contact tank, disinfection can be achieved within 2 minutes to obtain a desired kill to less than 100 MPN total coliforms per 100 ml. Within practical limits, the same results were obtained for chlorine dosages of 15, 10, and 5 mg/l [8]. No minimum dosage was established. A comparison of data on the corrugated baffle contact tank, the tubular and stirred batch reactors in Collin's experiment, and a conventional contact basin is presented in Table 75. These results tend to support the following arguments:

1. Effective disinfection is achievable at low chlorine residual and reduced contact times when there

Table 75. COMPARISON OF DATA ON DISINFECTION DEVICES [8]

Type of chamber	Chlorine residual, mg/l	Contact time, t, sec	Velocity gradient, G, sec^{-1}	Gt, dimensionless	Fraction of organisms surviving, dimensionless
Tube [3]	5	60	6,800	4×10^5	6×10^{-4}
Stirred batch [3]	5	60	400	2.4×10^4	1×10^{-1}
Corrugated baffles	3	240	40	1×10^4	3×10^{-4}[a]
Corrugated baffles	3	120	40	4.8×10^3	1×10^{-3}[a]
Conventional	--	1,800	6	1.1×10^4	1×10^{-2} est.

a. Based on limited tests.

is sufficient mixing intensity, although further verification is essential.

2. By providing good mixing intensity and promoting plug flow, good bacterial kill performance can be achieved in corrugated baffle contact tanks.

3. The tubular reactor offers another possible application, but requires a long outfall conduit, and the conduit size and storm overflow rate must guarantee turbulent flow conditions.

One advantage of the high velocity gradient, short resident time contact chamber is that it is less sensitive to flow rate than the conventional contact chamber, and considerably less likely to be impaired by short circuiting. Nevertheless, the use of a Sutro weir was recommended [8] for the design, where sufficient head is available, to produce a rather constant Gt product at the peak design flow condition.

The primary concern in the corrugated baffle contact tank is to promote plug flow while maintaining good mixing intensity. Since the objective is plug flow, it is necessary to disperse the disinfectant throughout the flow before it enters the contact tank. One method for dispersing the disinfectant, which is becoming more commonly used, is rapid flash mixing using a mechanical mixer. This method has proved satisfactory in enhancing bacterial kill by ensuring complete dispersion of the disinfectant.

Temperature – It has been shown that temperature can be an important variable in disinfection. Specifically, with pH, initial bacterial count, and chlorine dioxide dosage held constant, it required 5 times as much contact time to obtain a 99 percent kill at 5 degrees C as it did to obtain the same kill at 30 degrees C [1]. Thus, temperature may be important in addition to the usual disinfection control parameters because the temperature range for combined sewer overflows is usually greater than that for municipal sewage. As a result, it might be necessary to vary disinfectant dosage seasonally or as affected by ambient temperature [4].

In results from recent tests conducted at Syracuse [12], it was reported that there appeared to be no difference in the effectiveness of either sodium hypochlorite or chlorine dioxide at temperatures ranging from 2 to 30 degrees C. This somewhat surprising result was attributed to the complex nature of the reactions between chlorine and chlorine dioxide and the constituents of sewage.

Chlorination control system – Flow fluctuation is usually greater for combined sewer overflows than for treatment-plant effluents. Hence, it is difficult to maintain a desired chlorine residual. The most suitable control system should provide automatic control on both inflow and effluent as compared to either one separately or manual control. Shown on Figure 68 is a schematic diagram of an automatic hypochlorite control system in New York City [16]. It includes the measurement of the upstream influent flow rate and the downstream chlorine residual. Information concerning the inflow rate and the residual are fed into a controller which directs the hypochlorite feed.

Alternatives to Chlorine Gas

Alternatives to chlorine gas for disinfection of combined sewer overflows and storm sewer discharges are being sought. Three major alternatives to chlorine gas are sodium hypochlorite, chlorine dioxide, and ozone, all of which can be generated on-site. Typical examples are (1) sodium hypochlorite generated either from sodium hydroxide and chlorine or electrolytically from brine, (2) chlorine dioxide generated from sodium chlorite and chlorine, and (3) ozone generated from air. The disinfectants used by various cities in treating combined sewer overflows and storm sewer discharges and their sources are listed in Table 76. In the case of generation involving chlorine as a reagent, the disinfectant is generated at treatment plants either for use at the treatment plant or for transfer to large holding tanks at the application sites. In either situation, the

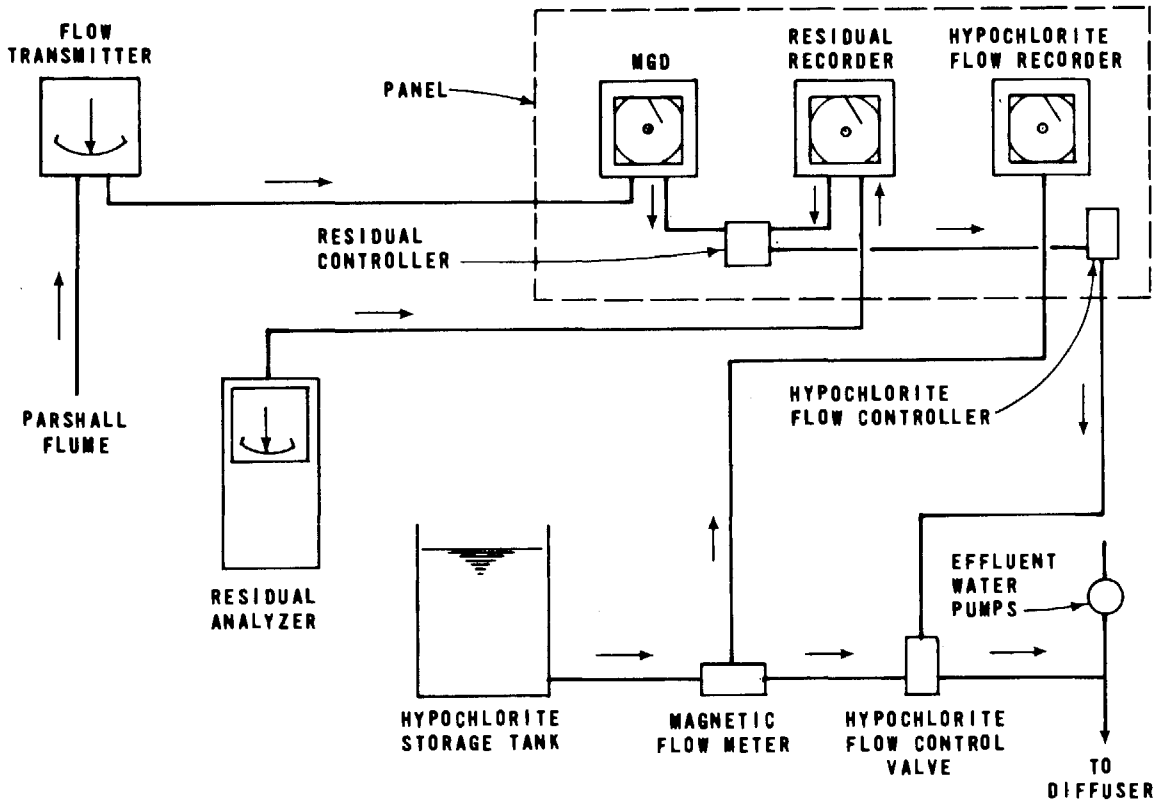

Figure 68. Chlorination control system, Oakwood Beach sewage treatment plant, New York City [16]

volume of chlorine used is considerably less when it is used as a reagent than when it is used alone.

Optimization of storage volume and generating capacity are important for on-site generation projects. This allows generation of the disinfectant to replenish supplies during periods when it is not being used. The critical parameters are the stability of the chemical produced and the frequency and magnitude of the overflow event in the drainage area.

Sodium Hypochlorite – Sodium hypochlorite or liquid bleach, manufactured by many companies in the United States, usually contains 12 to 15 percent available hypochlorite at the time of manufacture. It is available only in liquid form. For combined sewer overflow and storm sewer discharge applications, it is produced on-site either by reacting chlorine

Table 76. CHEMICAL DISINFECTION AGENTS AND SOURCES USED BY VARIOUS CITIES FOR COMBINED SEWER OVERFLOWS AND STORM SEWER DISCHARGES

Location and site	Chemical agent	Source
Cambridge, Massachusetts, Cottage Farm Storm Detention and Chlorination Facility	Sodium hypochlorite	Purchased. On-site generation from brine (experimental).
Dallas, Texas, Bachman Storm Water Plant	Chlorine	Purchased.
Kenosha, Wisconsin, contact stabilization	Chlorine	Purchased.
Milwaukee, Wisconsin, Humbolt Avenue Pollution Abatement Plant	Chlorine	Purchased.
Mount Clemens, Michigan, Combined Sewer Overflow Collection and Treatment Facility	Chlorine dioxide	On-site generation from sodium chlorite and chlorine.
New Orleans, Louisiana, 4 different storm sewer discharge sites	Sodium hypochlorite	Central generation from sodium hydroxide and chlorine. Transported to and stored at application sites.
New Providence, New Jersey, Sanitary and Storm Water Pollution Control Plant	Chlorine	Purchased.
New York City, New York, Spring Creek Auxiliary Pollution Control Plant	Sodium hypochlorite	Purchased.
Philadelphia, Pennsylvania, Callowhill Microstrainer Facility	Sodium hypochlorite Ozone	Purchased. On-site generation (experimental).
San Francisco, California, Baker Street Dissolved Air Flotation Facility	Sodium hypochlorite	Purchased.
Syracuse, New York	Chlorine dioxide Chlorine	On-site nitrosyl chloride generation system. Purchased.

with sodium hydroxide or by electrolysis from brine. Because sodium hypochlorite solutions are to some degree unstable, storage temperatures should not exceed 29 degrees C (85 degrees F) and the maximum shelf life is about 90 days. The stability of various sodium hypochlorite solutions is shown on Figure 69. As a result of the decay in strength indicated, it is necessary to adjust the hypochlorite feed rate at the time of application to maintain the desired concentration in the combined sewer overflow or storm sewer discharge.

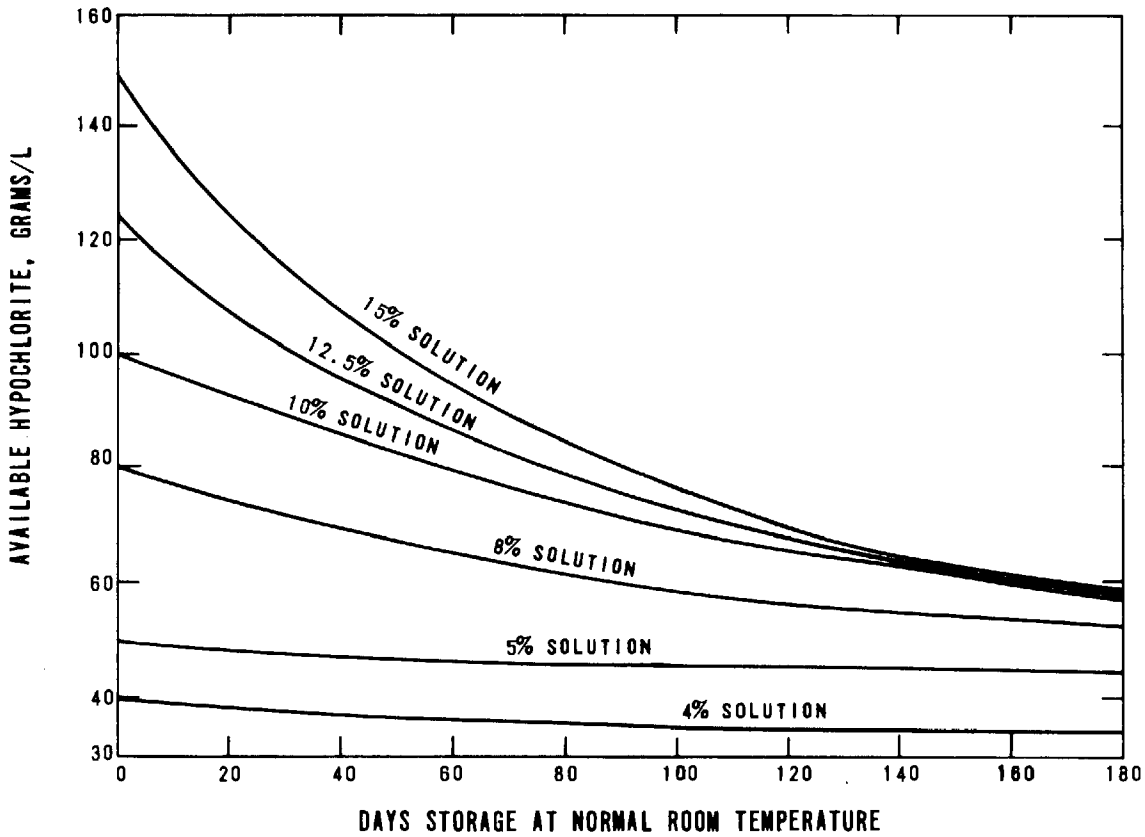

Figure 69. Stability of sodium hypochlorite solution [13]

Hypochlorite is attractive because it is safer to handle than chlorine gas. It can be generated between storms and stored until it is used. This reduces the capital costs by allowing the use of a small generating plant that can operate almost continuously, thus avoiding the problems of frequent shutdown and startup and having the plant idle for long periods. An example of a sodium hydroxide-chlorine gas hypochlorite generating plant for storm sewer discharge disinfection is shown on Figure 70. A recently developed electrolytic hypochlorite generator is shown on Figure 71.

Chlorine Dioxide – Chlorine dioxide is being used currently to disinfect storm flows at Mount Clemens, Michigan, and Syracuse, New York. It has a distinct advantage over chlorine for treating water having a high ammonia content because it reacts readily with oxidizable materials without

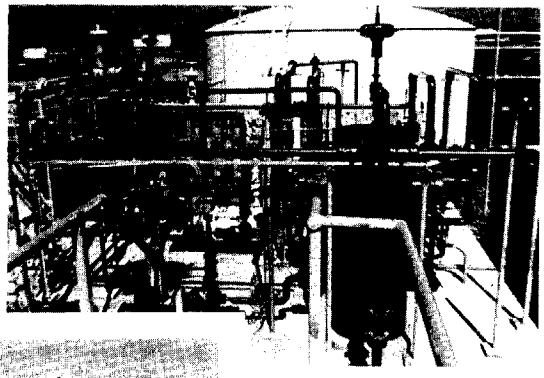

(a)

(b)

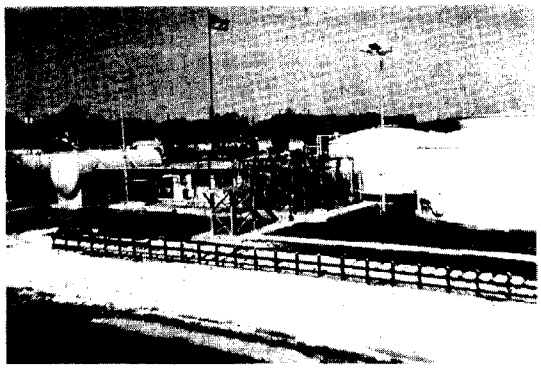

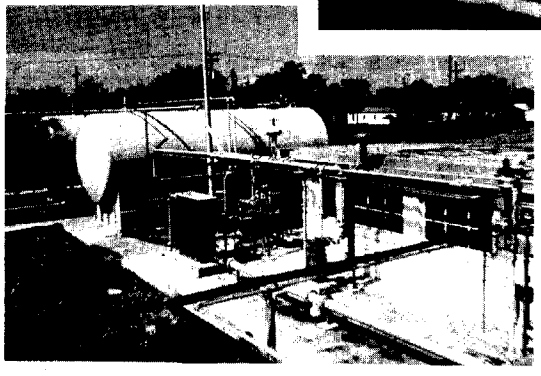

(c)

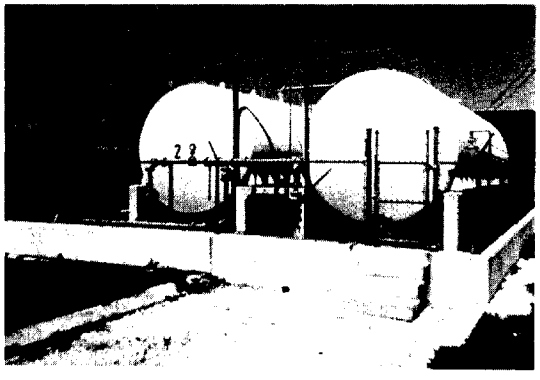

(d)

Figure 70. Hypochlorite generating plant for stormwater disinfection, New Orleans

(a) Detail of solution pumps and transfer piping with sodium hydroxide storage tanks in background (b) Overview of sodium hydroxide-chlorine gas hypochlorite generating plant. Chlorine gas is delivered in tank car quantities on the railroad siding in foreground (c) View of reaction chamber with manufactured hypochlorite storage tanks in background (d) Typical hypochlorite holding tanks at application site

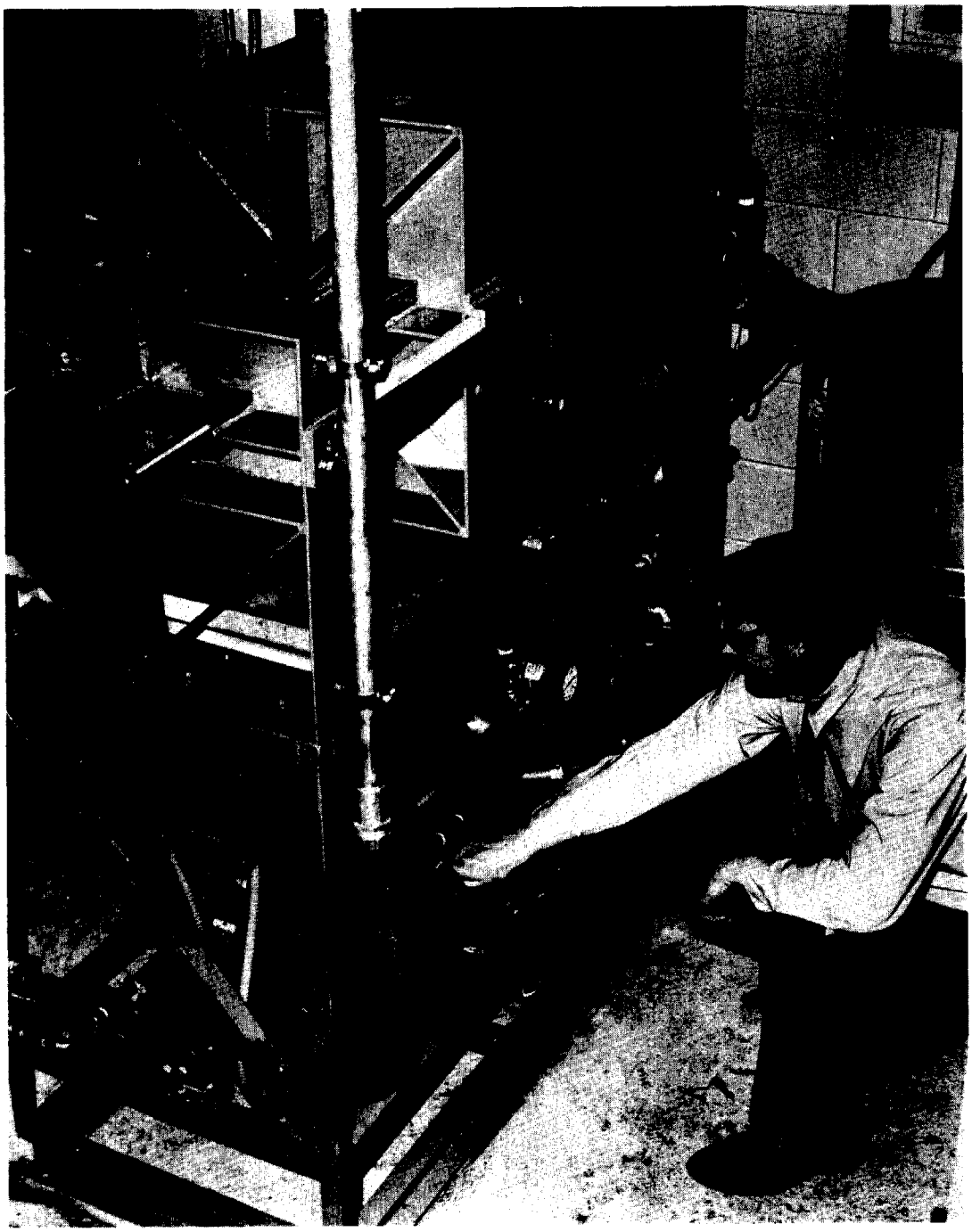

Figure 71. Electrolytic hypochlorite generator

Small 12-cell electrolytic generator capable of producing 1,515 to 1,890 liters per day (400 to 500 gpd) of 7-percent sodium hypochlorite solution

combining with ammonia to form chloramines. Chloramines have been reported to be toxic to some forms of aquatic life at concentrations as low as 10 μg/l [15].

Ozonation

Ozone is usually produced by passing high-voltage electricity through dry atmospheric air or oxygen between stationary electrodes. A small percentage of the oxygen is converted into ozone in the process. Ozone not only has a more rapid disinfecting rate than chlorine but also the further advantage of supplying additional oxygen to the wastewater. The increased disinfecting rate for ozone requires shorter contact times and thus effects a reduction in capital costs compared to those for a chlorine contact tank. Ozone does not produce chloramines or a long-lasting residual as chlorine does, but it is unstable and must be generated on-site just prior to application. Thus, unlike chlorine, no storage is required. In recent tests on combined sewer overflows in Philadelphia, equivalent disinfection was obtained using either 3.8 mg/l of ozone or 5 mg/l of chlorine [7].

DEMONSTRATION PROJECTS

New Orleans, Louisiana [5]

Storm sewer discharges being pumped from the east bank of New Orleans into Lake Pontchartrain, as shown by bacteriological testing during 1961 to 1966, contained excessive coliform bacteria concentrations. It was felt that disinfection on a large scale could restore the quality of the water to a level adequate for body contact sports. To accomplish this, the EPA sponsored a demonstration project in which disinfectant was added to the storm sewer discharges pumped by four drainage pumping stations located on three outfall canals on the east bank of New Orleans. The four pumping stations had a combined capacity of 313 cu m/sec (7,140 mgd) and each normally pumps in excess of 566,000 cu m (20,000,000 cu ft) per day of stormwater on rainy days.

The project included the design and construction of a sodium hypochlorite manufacturing plant to prepare the disinfectant. The manufacturing plant was located at the water purification plant of the Sewerage and Water Board of New Orleans because of the availability of personnel experienced in handling large quantities of chlorine. The disinfectant was manufactured at a continuous, automatically controlled plant with a capacity of 3,785 l/hr (1,000 gal./hr) of 120 g/l sodium hypochlorite. Also included at the plant was storage

for 151,400 l (40,000 gal.) of finished sodium hypochlorite. Photographs of the plant and storage tanks are shown on Figure 70. Disinfectant prepared at the manufacturing plant was stored at the feeding facilities located adjacent to each of the pumping stations. The disinfectant was transported to the feeding facilities in two 11,400 l (3,000 gal.) tank trucks.

Sodium hypochlorite was manufactured by reacting 50-percent sodium hydroxide, water, and chlorine under atmospheric conditions. The average manufacturing cost for the hypochlorite was $0.05/kg ($0.12/lb) of available chlorine. Total cost of the manufacturing facilities was $581,700 (ENR 2000).

Sodium hypochlorite was added to storm sewer discharges during 16 high-volume storms and more than 20 low-volume storms. During the 16 high-volume storms, 3,936,400 cu m (1,040,000,000 gal.) of stormwater were treated with more than 132,475 l (35,000 gal.) of sodium hypochlorite. The largest single treatment episode was 257,400 cu m (68,000,000 gal.) of stormwater with 30,660 l (8,100 gal.) of hypochlorite. Based upon results from the 16 high-volume storms, chlorine residuals greater than 0.5 mg/l resulted in 99.99-percent or greater reduction of coliform concentrations. However, upon cessation of disinfection, coliform levels in the outfall canals recovered within 24 to 30 hours. Total coliform concentrations recovered to those levels normally found in the outfall canal. Fecal coliform recovery levels were approximately two orders of magnitude less than normal endogenous levels. This rapid recovery changes the significance of the coliform levels. Their use as indicators of possible pathogenicity of the stormwater is obscured once disinfection has occurred.

Ionics Hypochlorite Generator [6]

An advanced electrolytic generator has been developed for on-site production of sodium hypochlorite from sodium chloride (salt) brine. In this system, an electrochemical cell electrolyzes high-purity sodium chloride brine (saturated at approximately 275,000 mg/l) to chlorine gas and sodium hydroxide solution, which are then reacted immediately outside the cell to produce a 5- to 10-percent sodium hypochlorite solution. The process requires 1.6 kwh of electricity and 0.95 kg (2.1 lb) of salt per 0.45 kg (1 lb) of sodium hypochlorite generated. The first field unit, shown on Figure 71, is scheduled for installation in the Somerville Marginal Conduit Pretreatment Facility, Somerville, Massachusetts.

This facility is being constructed to divert combined sewer overflow, which is being dumped into the Mystic River basin, into a tidal portion of the river. All overflow is to be screened and disinfected with hypochlorite. The conduit will act as the detention chamber with a 9.5-minute contact time for the 5-year storm and progressively longer times for less severe loads. The Somerville interception station has been designed on the basis of 240 hours per year of combined sewer overflow. The average flow of this overflow will be 3,940 l/sec (90 mgd) and the desired dosage level will be 4.3 mg/l of sodium hypochlorite. The annual consumption of hypochlorite will be 14,620 kg (32,200 lb) of available chlorine or approximately 134,600 to 168,250 l (35,560 to 44,450 gal.) of 7-percent hypochlorite solution.

The 12-cell field test unit was designed for a capacity of 6.8 kg (15 lb) of available chlorine per hour or 1,515 to 1,890 l/day (400 to 500 gpd). Since the annual consumption will be approximately 14,620 kg (32,200 lb), the system will run 2,400 hours per year or about 27 percent of the time. This results in a cost of $0.200/kg ($0.091/lb) of available chlorine. At that location, the quoted price for delivered hypochlorite is $0.385/kg ($0.175/lb) of available chlorine.

Delays in construction of the Somerville Marginal Conduit made initial testing at an alternate site necessary. The alternate site selected was the Cottage Farm Storm Detention and Chlorination Facility in Cambridge, Massachusetts.

Cottage Farm Storm Detention and Chlorination Facility, Boston, Massachusetts

The storage/sedimentation aspects of this facility have been discussed previously in Section IX, Storage. Its other major function is to disinfect all combined sewer overflows to prevent degradation of the water quality of the Charles River Basin. This facility was designed to use truck-delivered sodium hypochlorite solution (10- to 15-percent concentration). The concentration of the solution decays in storage. The hypochlorite solution is stored in two 15,900-l (4,200-gal.) fiber glass tanks. The estimated annual demand at this site is 22,700 kg (50,000 lb) of available chlorine. Average chlorine demand of the combined sewage varies from 1.3 to 4.5 mg/l.

The small 12-cell Ionics hypochlorite generator was operated at the facility on a test basis in October to December 1972 and part of 1973. High-purity brine was found to be necessary for generation of the hypochlorite. The maximum concentration produced was 7-percent hypochlorite at 1,515 to 1,890 l/day (400 to 500 gpd). This, plus decay, routinely

meant a feed concentration of approximately 4 percent, which required more solution than the hypochlorite tanks could store. Additional operating problems plagued the tests. The facility has returned to operating with truck-delivered hypochlorite.

Onondaga County, Syracuse, New York [12]

As a result of bench-scale studies investigating high-rate screening and high-rate disinfection, a demonstration combined sewer overflow treatment facility is being constructed in Syracuse, New York. The project is sponsored by EPA.

Three screening processes will be tested, each with a maximum capacity of 220 l/sec (5 mgd). The screening equipment will include a microstrainer with a mesh opening of 23 microns, a drum screen with a mesh opening of 71 microns, and a rotary fine screen with a mesh opening of 105 microns. Following each screening unit will be individual contact tanks so that several methods of disinfection can be tested also.

Disinfecting agents to be used are chlorine and chlorine dioxide. Chlorine will be provided from 1-ton chlorine gas cylinders. Chlorine dioxide will be generated by means of a Nitrosyl Chloride generation system at the demonstration site. The generation facilities and the feed systems were designed to provide disinfection with a single agent or a combination of the two agents at various quantities of either. The point of application of the disinfecting agent is variable also. The contact tanks were designed to accommodate flash mixing at the point of injection or flash mixing at several locations throughout the tank. Corrugated baffles will be added to one of the contact tanks to test the effects of continuous high turbulence on disinfection. A concentrated effort will be made to determine the effects of two-stage disinfection.

From bench-scale tests, it was determined that for a 12-hour overflow of 219 l/sec (5 mgd) (the maximum pumping capacity for each treatment unit), 227 kg (500 lb) of chlorine would be required at a dosage level of 25 mg/l to disinfect the entire overflow with a contact time of 60 seconds. The chlorine dioxide generator was sized on the basis of a 10-mg/l dosage level and a contact time of 60 seconds. In both cases, the target total coliform concentration level in the effluent is 1,000/100 ml.

It was reported also that effluent total coliform bacteria requirements of 1,000/100 ml and fecal coliform requirements of 200/100 ml can be reached by using 25 mg/l of

chlorine or 12 mg/l of chlorine dioxide in a single-stage disinfection process with a contact time of 60 seconds. Equivalent disinfection was accomplished in the same length of time using 8 mg/l of chlorine, followed 30 seconds later by 2 mg/l of chlorine dioxide. It is hoped that the results of bench-scale tests will be verified by the prototype facility when operation begins.

Philadelphia, Pennsylvania [7, 8]

This work consisted of the design, installation, operation, and evaluation of a commercial microstrainer, and of ozonation and chlorination at a typical combined sewer overflow. The results of the microstrainer evaluation were discussed previously in Section X. Also included in this project was the corrugated baffle chlorine contact tank mentioned previously in this section.

Chlorine contact times of only 2 minutes, under relatively high turbulence conditions with chlorine dosages as low as 5 mg/l, reduced total coliform concentrations from 1,000,000/100 ml in the combined sewer overflow down to 5 to 10/100 ml. Fecal coliform concentrations were similarly reduced, under the same conditions, from 100,000/100 ml down to 5 to 10/100 ml. These results were obtained in a specially designed contact tank using parallel corrugated baffles to provide high mixing intensities.

It was reported also that the use of ozone for disinfection of treated combined sewer overflows is feasible [7]. Ozone was generated by a commercially available ozonator with air as the input for application to microstrainer effluent. Figure 72 shows the ozone generation and its arrangement with the microstrainer unit. Ozone concentrations of 3.8 mg/l were required to match disinfection efficiencies of 5 mg/l of chlorine.

The capital cost of ozone generation facilities, when oxygen is used for the production, was considered to be lower than that for hypochlorite facilities.

COSTS

Cost data on chlorine gas and hypochlorite disinfection are presented in Table 77. Disinfectant costs for combined sewer overflow and storm sewer discharge treatment are higher than those for sewage treatment, as indicated in the table. This is the result of smaller total annual disinfectant volume requirements, increased disinfectant concentration requirements, and higher unit operation and maintenance costs for combined sewer overflow treatment facilities.

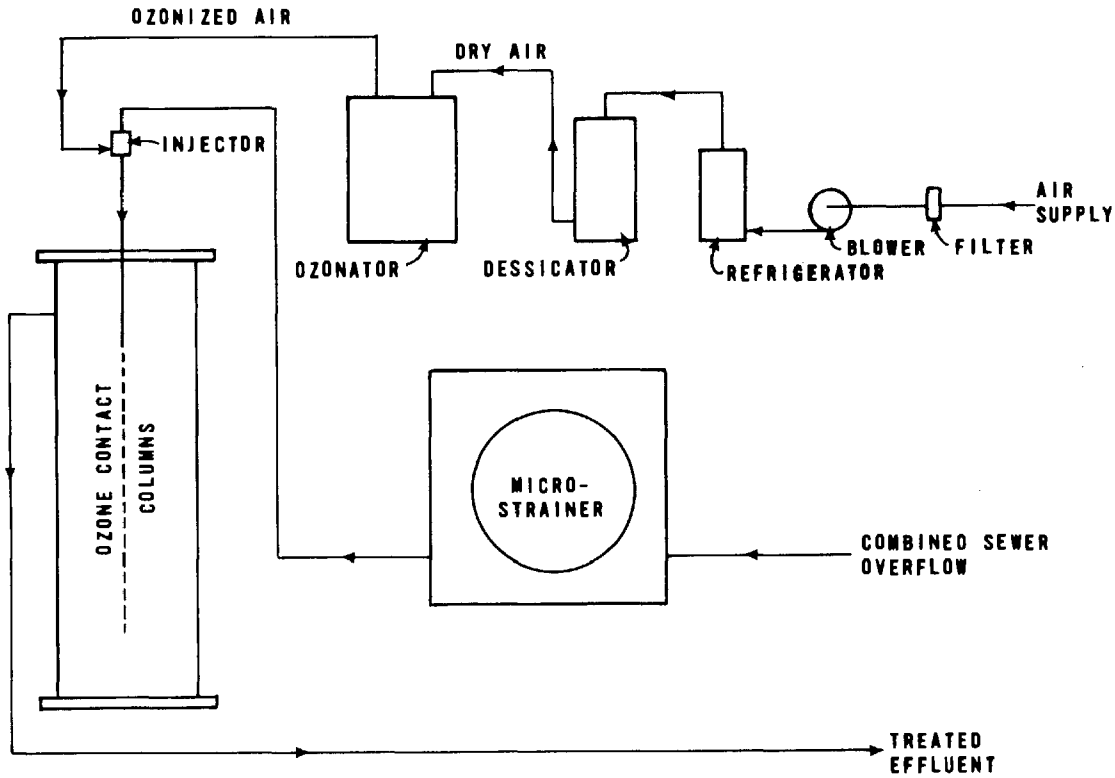

Figure 72. Schematic of ozone generation and injection for microstrainer facility

These costs could be reduced by using the facilities in conjunction with dry-weather flow treatment plants, whenever possible.

Generally speaking, chlorine gas has the lowest production and operation costs for large, continuous operation requirements. Disinfection using commercially purchased hypochlorite has low initial capital costs, but supply costs depend on the location, source, and quantity. Capital costs for on-site electrolytic hypochlorite generation are high, while operation costs are dependent upon the solution used (sea water or brine) for generation. The operation costs are lower for sea water, but technical difficulties associated with the use of sea water have been reported.

The operating costs for tertiary treatment of secondary treatment plant effluent using ozone are listed in Table 78. These unit costs would increase considerably when applied to

Table 77. COST DATA ON CHLORINE GAS AND HYPOCHLORITE DISINFECTION [13][a]

Location, agent, and source	Capital cost, $	Operating cost, $/yr	Cost/lb available chlorine, $
Akron, Ohio[b]			
Sodium hypochlorite			
Purchased	441,500	23,300	0.152-0.264
Cambridge, Massachusetts and Somerville, Massachusetts[b]			
Sodium hypochlorite			
Purchased	--	--	0.385
On-site generation	--	--	0.200
New Orleans, Louisiana[c]			
Sodium hypochlorite			
On-site generation	581,700	290,000	0.120
Saginaw, Michigan[d]			
Chlorine gas	161,000	2,300	0.35
Sodium hypochlorite			
Purchased	19,550	6,325-11,500	0.18-0.31
On-site generation	95,450-161,000	4,715-5,175	0.28-0.40
South Essex Sewerage District, Massachusetts[e]			
Chlorine gas	872,460	233,100	0.035
Sodium hypochlorite			
Purchased	421,800	364,080	0.046
On-site generation			
Sea water	1,665,000	160,950	0.035
Brine	1,665,000	303,030	0.051

a. ENR = 2000.

b. Combined sewer overflow disinfection.

c. Storm sewer discharge disinfection.

d. Combined sewer overflow disinfection at use rate of 42,000 lb/yr of chlorine.

e. Sewage treatment plant effluent disinfection at use rate of 24,000 lb/day of chlorine.

Note: $/lb x 2.2 = $/kg

Table 78. ESTIMATED COSTS OF TERTIARY TREATMENT PLANTS USING OZONE [9][a]

Item	Plant capacity, 1 mgd	Plant capacity, 10 mgd	Plant capacity, 100 mgd
Capital cost, $[b]	254,520	1,360,800	9,399,600
Operating cost, $/mil gal.	172.63	96.65	61.84
Operating cost, $/1,000 gal.	0.173	0.097	0.062

a. ENR = 2000.

b. Oxygen recycle system would be used.

Note: mgd x 43.808 = l/sec
$/mil gal. x 0.264 = $/Ml
$/1,000 gal. x 0.264 = $/1,000 l

combined sewer overflow disinfection because the flow would not be continuous for both. Additional ozone generation capacity would be required to handle the wet-weather flows. However, the dual use of such facilities for both dry- and wet-weather operation would reduce the cost slightly.

The capital costs for different disinfection agents and methods resulting from a study conducted at Philadelphia are shown in Table 79. The capital costs for ozone generation are usually the highest of the most commonly used processes. Ozone operation costs are very dependent on the cost of electricity and the source of the ozone (air or pure oxygen).

Table 79. COMPARISON OF ESTIMATED CAPITAL COSTS FOR 3 DIFFERENT DISINFECTION METHODS [7][a]

Disinfection method	Capital cost, $/mgd
2-Minute ozone contact (chamber with once-through oxygen-fed ozone generator)[b]	13,013
2-Minute chlorine contact (chamber with hypochlorite feeder)[c]	1,521
5-10 Minute conventional chlorine contact[d]	1,690

a. ENR = 2000.

b. Unit cost of ozone at $5.20/lb from oxygen @ $0.19/lb; dosage of 3.8 ppm; Otto plate type generator.

c. Unit cost of hypochlorite at $0.42/lb available chlorine; dosage of 15 ppm.

d. Unit cost at $0.42/lb available chlorine; dosage of 5 ppm.

Note: $/mgd x 0.0228 = $/l/sec
$/lb x 2.2 = $/kg

Part IV

IMPLEMENTATION

Section XIV

INTEGRATED SYSTEMS

The treatment and abatement methods described in Part III, Management Alternatives and Technology, have been discussed essentially as unique and singular solutions. In fact, many of these methods can and should be combined to optimize the effectiveness of any overall abatement program by maximizing the pollution reduction, enhancing the aesthetic and reuse potential, and minimizing the cost of the program. For example, reducing the source contaminants, solids and debris in stormwater runoff (source control); using regulators for maximizing storage capacity in sewers (system control and storage) and for coarse quantity/quality separation (preliminary treatment); and providing objective level treatment for the storm flow prior to discharge (treatment) could substantially reduce the pollution load on the receiving water. Thus, the purpose in this section is to deal with integrated systems for storm sewer discharge and combined sewer overflow treatment and abatement.

The interfacing of storm flow pollution abatement facilities with existing or proposed sewage collection systems and dry-weather flow treatment facilities is discussed first. Next, the availability and use of mathematical models for "planning," "predictive," and "decision-making" purposes is described and several examples of sewerage master plans using integrated approaches are presented. Finally, the importance of integrating the required facilities aesthetically into each local environment is emphasized.

INTERFACING WITH DRY-WEATHER FACILITIES

The principal purpose of the storm flow pollution abatement device or process is to reduce the contaminants in the flows discharged to receiving waters. Two methods available are: (1) source control to remove the contaminants before they are picked up by the stormwater, and (2) treatment of storm and combined sewer flows after contamination to remove pollutants before discharge. In this latter method, existing

dry-weather facilities or newly constructed facilities can be used. Storage devices are used to reduce the rate of flow, which enables the reduction in size of the required treatment facilities and leads to their more effective utilization. This discussion describes how each abatement device or process can fit into an existing system and how the devices interrelate with each other. The interfacing of the storm flow pollution abatement scheme with the existing sewerage system is important in the development of a total integrated waste flow system.

First, it is necessary to understand where individual units can be used in relation to a typical sewer network and sewage treatment plant. Basically, a storm flow treatment device may be located (1) at overflow points or possibly at key upstream locations, (2) at one or more central locations away from dry-weather facilities, or (3) adjacent to municipal sewage treatment plants. A fourth possibility exists when storm flows are treated at dry-weather plants after being stored. The first two possibilities are essentially the same except for size and number of stormwater treatment devices used. The first consists of many locations with small facilities; the second consists of one or two larger facilities at strategic points. Whenever several units are needed, it is usually economical to use the same type of device, equipment, and design to reduce operation and maintenance costs. Larger centralized facilities generally are associated with storage tunnels or other large storage devices because of the costs involved in transmitting large quantities of flow and providing peak flow rate capacities. Representative means of interfacing with existing sewerage systems are shown schematically on Figure 73. Although all facilities are shown downstream of the collection systems for clarity, upstream locations may offer benefits in particular applications as determined by limitations within the existing system.

As previously noted, the physical, biological, and physical-chemical processes used on storm flows each have limitations as to where they can be used. Biological treatment devices should be located at sewage treatment plants to provide a continuous active biomass. Physical and physical-chemical treatment devices may be placed at satellite locations. Although a complete physical-chemical treatment system could be placed at overflow points, its size and complexity generally limit it to a central location or next to dry-weather facilities. Physical treatment devices, with or without chemical additions, lend themselves more easily to remote locations at overflow points.

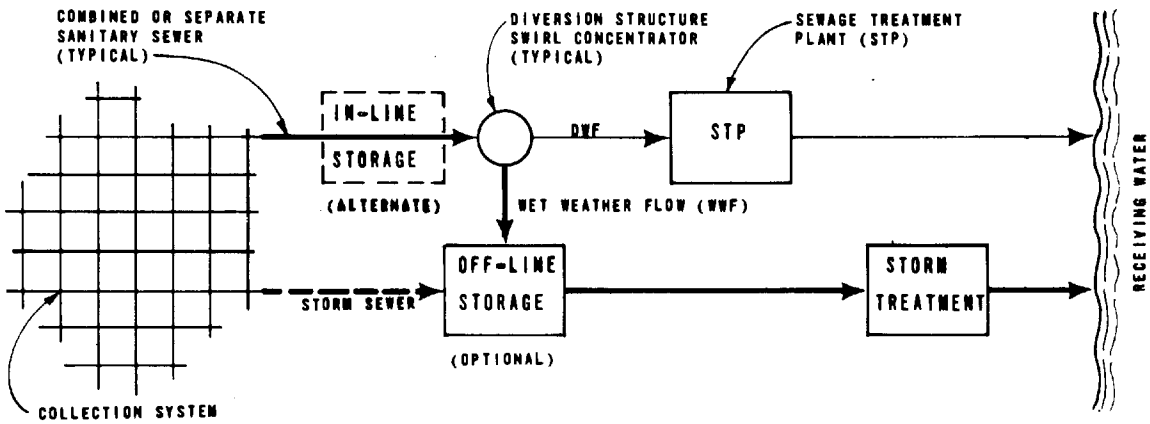

(a) SATELLITE AND CENTRALIZED FACILITIES

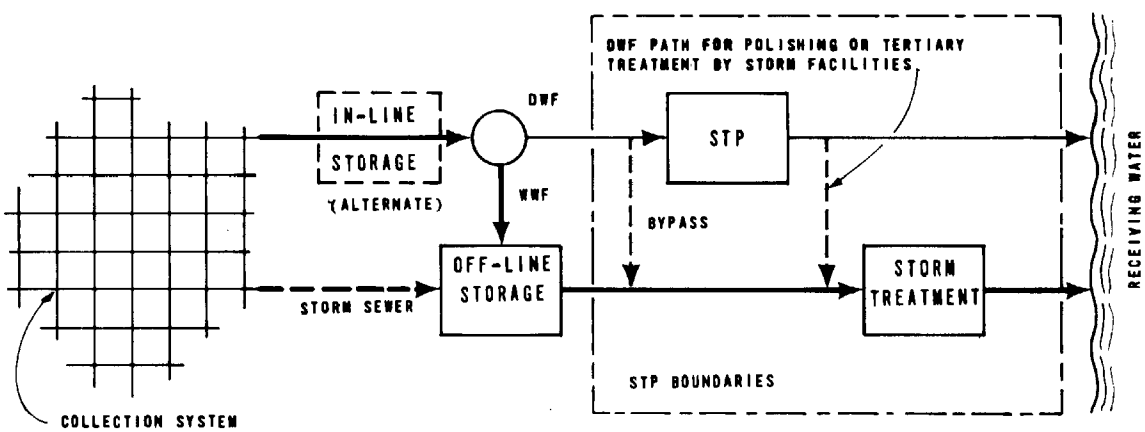

(b) FACILITIES IN CONJUNCTION WITH SEWAGE TREATMENT PLANT

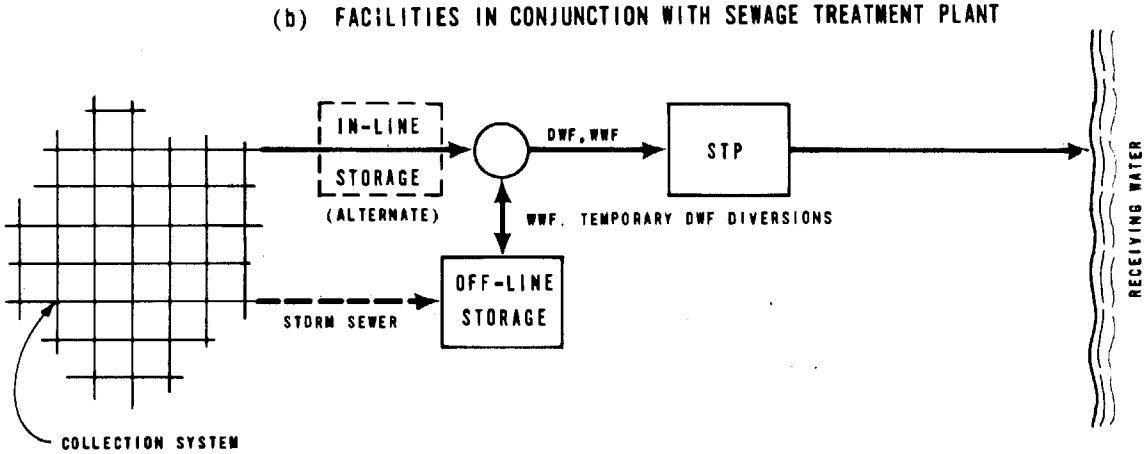

(c) STORAGE OF STORM FLOWS WITH TREATMENT AT SEWAGE TREATMENT PLANT

Figure 73. Methods of interfacing stormwater facilities with existing systems

Some storm flow treatment facilities offer the added advantage of acting as effluent polishers or tertiary treatment when operated in conjunction with a secondary sewage treatment plant. In addition, such facilities can become dual purpose by improving the effluent quality of the dry-weather flow during non-storm conditions and treating storm flows during wet weather. Storage and transmission (conduit) facilities may and should also provide dual-purpose relief or standby functions. This total system approach, of course, has the added benefit of reducing the overall cost of wastewater facilities construction and operation.

For example, storm flow facilities used in conjunction with sewage treatment plants, particularly the biological treatment devices, provide benefits by increasing dry-weather capacity, possibly postponing planned expansions, and providing versatility in handling breakdowns, maintenance, and other factors because of the ability to treat dry-weather flow in emergencies. Two advantages of interfacing storm flow treatment facilities with existing sewerage systems are that (1) solids removed from the storm flow can be discharged to the interceptor, and (2) most stormwater treatment processes can accommodate higher flow rate variations or provide flow equalization and control. A summary of potential interfacing actions is presented in Table 80.

INTERFACING UNIT PROCESSES

The interrelationships between storm flow devices and unit processes is second in importance only to interfacing with the dry-weather facilities. As indicated previously, storage, either in-line or off-line, is used to remove the peaks and valleys in the storm hydrograph. As such, its use with treatment devices is set. The relationships between the different treatment devices, on the other hand, are not so well defined. Classifying the units into main and complementary treatment units is an advantage, as it delineates the main blocks from which to build an abatement scheme. These are listed in Table 80.

Main treatment units (i.e., primary, secondary, and tertiary treatment) are considered as devices that remove a significant portion of the SS and/or dissolved organics. The remainder are pretreatment units. They can be used to assist the main process by protecting against damage (bar screens), or reducing coarse solids loading on the main process (fine screens ahead of dual-media filters, dissolved air flotation units, etc.). These interrelationships are shown in Table 81. The reader is referred to the discussions of the individual processes for details on their ability to interface with other processes. Of noteworthy

importance, however, is the ability of filters and microstrainers to polish sewage treatment plant effluent and of physical-chemical processes to act as a tertiary treatment plant. They therefore can act in a dual capacity. Sedimentation is easily incorporated into a storage facility, thus reducing the total cost of clarification and storage.

One process not mentioned yet in this discussion is disinfection. It is a process that will be used at almost all storm flow treatment facilities to reduce bacterial and virus counts. In some cases, disinfection has been applied within storage/sedimentation or other tankage to eliminate the need for a separate contact tank; in others, a contact tank is required.

The objective of interfacing is to use processes and/or equipment that are compatible with other processes and/or equipment and also with the existing system. At the same time, the devised storm flow facility must meet the pollution removal criteria necessary to protect the receiving waters. The objective pollution abatement system is one that makes a total wastewater system for the least cost.

The planning fundamentals were outlined in Section IV. A key planning tool, perhaps the most important aid in storm flow evaluations, is mathematical modeling. The available programs and application techniques are discussed next.

MATHEMATICAL MODELING TECHNIQUES

The complexity of modern sewerage systems, whether combined or separate sanitary and storm, makes it extremely difficult to evaluate the impact of additions, proposed modifications, or new systems rapidly and accurately. The time and manpower required to make such an evaluation by traditional methods can be tremendous. The application of computerized mathematical simulation modeling techniques to evaluate additions or changes to drainage areas and sewerage systems, to interpret storm phenomena, and to assess receiving water response, not only greatly reduces this time and manpower requirement but also allows the comparison of alternative courses of action. The use of computerized modeling techniques facilitates the necessary *regional planning* and direction of pollution abatement.

Under a concurrent EPA contract, existing mathematical models for the engineering assessment, control, planning, and design of storm and combined sewerage systems are being evaluated [1]. The purpose of the study is to evaluate comprehensive models and to provide guidelines for the

Table 80. INTERFACING STORM FLOW FACILITIES WITH EXISTING SEWERAGE SYSTEM

Storm flow facility	Type of unit	Primary purpose	Facility is dependent on DWF plants	Facility is good for satellite locations	Facility increases DWF plant versatility
STORAGE					
In-line	--	Flow attenuation	a	Yes	Yes
Off-line	--	Flow attenuation	a	Yes	Can
Basins	--	Flow attenuation	a	Yes	Can
Tanks	--	Flow attenuation	a	Yes	Can
Underground silos	--	Flow attenuation	a	Yes	Can
Underwater	--	Flow attenuation	a	Yes	Can
Deep tunnel	--	Flow attenuation	a	Yes	Can
Mined labyrinths	--	Flow attenuation	a	Yes	Can
TREATMENT					
Sedimentation	Primary	Removes SS	No	Yes	No
Dissolved air flotation	Primary	Removes SS	No	Yes	No
Bar screens	Pretreatment	Protects down-stream equipment	No	Yes	No
Rotary fine screens	Pretreatment	Roughing filter	No	Yes	No
Fine screens	Pretreatment	Roughing filter	No	Yes	No
Microstrainers	Primary	Removes SS	No	Yes	Yes
Filtration	Primary	Removes SS	No	Yes	Yes
Swirl concentrator	Pretreatment Primary	Quantity and quality regulator	No	Yes	Can
Contact stabilization	Secondary	Removes SS and dissolved organics	Yes	No	Yes
Trickling filters	Secondary	Removes SS and dissolved organics	Yes	No	Yes
Rotating biologi-cal contactors	Secondary	Removes SS and dissolved organics	Yes	No	Yes
Treatment lagoons	Secondary	Removes SS and dissolved organics	Not necessarily	Yes	Can
Physical-chemical treatment	Tertiary	Removes suspended and dissolved material	No	Yes	Yes
Disinfection	Post treatment	Reduces bacterial contamination	No	Yes	Can

Table 80. (Continued)

Storm flow facility	Generally acceptable max flow variation (times base flow)	Advantages	Limitations
STORAGE			
In-line	>10[b]	Uses existing facilities.	Limited to excess sewer capacity.
Off-line	>10	Location versatility. Can be combined with sedimentation.	Usually expensive.
Basins	>10	Inexpensive.	Large land requirements.
Tanks	>10	--	Large land requirements.
Underground silos	>10	Minimum land requirements.	--
Underwater	>10	Minimum land requirements.	Solids removal problems.
Deep tunnel	>10	Minimum land requirements; flow transmission.	Expensive.
Mined labyrinths	>10	Minimum land requirements.	Expensive.
TREATMENT			
Sedimentation	2-4[c]	Can be combined with storage.	Low removals.
Dissolved air flotation	2-4[c]	Good for satellite locations.	Somewhat complicated equipment.
Bar screens	>10	Rugged.	--
Rotary fine screens	1-2	--	Low flow variation.
Fine screens	5-10	Versatile; low land requirements.	--
Microstrainers	5-10	Versatile; low land requirements.	--
Filtration	2-4[b]	Good SS removal.	--
Swirl concentrator	>10	Solids separation.	--
Contact stabilization	1-2	Easily comhined with existing activated sludge plants.	Must be combined with DWF plant.
Trickling filters	5-10	Easily combined with existing trickling filter plants.	Must be combined with DWF plant.
Rotating biological contactors	5-10	Easily combined with existing rotating biological contactors.	Must be combined with DWF plant.
Treatment lagoons	>10	Can be used in conjunction with recreation facilities.	Large land requirements.
Physical-chemical treatment	2-4	Produces a reusable effluent.	High sludge (dry weight) volume.
Disinfection	>10	Protects public health.	Expensive.

a. Generally yes for dewatering and solids disposal. May also apply to primary and pretreatment devices.

b. For short periods of time.

c. Can be made to handle higher variations by using multiple units in parallel.

Table 81. GENERAL INTERFACING BETWEEN TYPES OF STORAGE AND TREATMENT DEVICES[a]

Proposed Process	Proposed Complementary/Supplementary Process																			
	In-line storage	Off-line storage	Sedimentation	Dissolved air flotation	Bar screens	Rotary fine screens	Fine screens	Microstrainers	Filtration	Swirl concentrators	Contact stabilization	Trickling filters	Rotating biological contactors	Treatment lagoons	Physical-chemical treatment	Coagulation w/sedimentation	Filtration	Carbon adsorption	Ammonia removal	Disinfection
In-line storage		○[b]	○	○		○	○	○	○		○	○	○	○	○					○
Off-line storage	◑[b]		○	○	◑	○	○	○	○	◑	○	○	○	○	○					○
Sedimentation[c]	◑	◑[d]			●	◑	◑		○	◑	○	○	○	○	○					○
Dissolved air flotation	◑	◑			●	◑	◑		○	◑	○	○	○	○	○					○
Bar screens																				
Rotary fine screens	●	●		○	●				○	◑	○	○	○	○	○					○
Fine screens	◑	◑		○	●				○	◑	○	○	○	○	○					○
Microstrainers	◑	◑			●				○						○					○
Filtration	◑	◑			●	●	●													○
Swirl concentrators																				
Contact stabilization[c]	●	●	◑		●	◑	◑	○	○	◑				○	○			○	○	○
Trickling filters[c]	●	●	●		●	◑	◑	○	○	◑				○	○					○
Rotating biological contactors[c]	●	●	◑		●	◑	◑	○	○	◑				○	○					○
Treatment lagoons	◑	◑	◑		●	◑	◑		○	◑										○
Physical-chemical treatment	●	●	◑		●	◑	◑			◑										
Coagulation w/sedimentation																	○	○	○	○
Filtration																◑		○	○	○
Carbon adsorption																◑	◑		○	○
Ammonia removal																◑[e]	◑[e]	○[e]		○
Disinfection	◑	◑	◑		●	◑		◑	◑	◑										

Key: ● = Required pretreatment device
◑ = Optional pretreatment device
○ = Effluent improving device

a. The combinations shown are only a general guide and do not replace a rigorous local evaluation.

b. To improve flow attenuation.

c. Grit chambers may also be required.

d. Sedimentation can be combined in one tank with the storage facility.

e. Depending on the type of ammonia removal device used.

Example: Assume sedimentation is to be used. Therefore, reading from the Proposed Process sedimentation line, the following can be used from the Proposed Complementary/Supplementary Process columns: in-line and off-line storage are optional preflow attenuation devices with the possibility that off-line storage uses the same tank as the sedimentation tank; bar screens are required pretreatment devices; rotary fine and ultrafine screens are optional pretreatment devices; filtration is a possible effluent improving device; swirl concentrators are possible pretreatment devices; and the biological and physical-chemical treatment units are also effluent improving devices to sedimentation.

practicing engineer to aid him in selecting the model most suited for his requirement. In light of this, only a general overview of the available models is included herein.

Available Models

Several models are presently available, each having a different level of sophistication. These range all the way from models that produce only the urban runoff hydrograph without the associated runoff quality to models that produce the runoff quantity and quality, route both through the sewer system along with the dry-weather flow, simulate the effects of various treatment and control facilities, and route the resulting quantity and quality through the receiving waters.

There are a number of mathematical models that carry out routine design functions or that simulate portions of complex urban wastewater management systems (such as rainfall-runoff computations and limited sewer flow routing) or the operation of a single storage reservoir or treatment plant, but only a few models have been developed that consider the entire sewerage system. Six of the more useful models are discussed briefly below.

Hydrograph-Volume Method – The Hydrograph-Volume Method (Ritter, 1971) was developed in Germany [18]. This model calculates the dry-weather flow and storm runoff, and routes the combined flows through a complex sewerage network. Its benefits appear to be in conduit sizing and design. The model does not simulate flow quality or control regulators. Cost computations appear to be external.

Road Research Laboratory Hydrograph Method – The British Road Research Laboratory (RRL) Method uses storm rainfall to provide a stormwater runoff hydrograph for the purpose of storm drainage design [23]. Rainfall is applied to the paved area of the drainage basin which is directly connected to the storm drainage system. Travel time to the nearest storm drainage inlet is computed for various increments of the total paved area that is directly connected. From this time-area information, the surface hydrograph arriving at the inlet is computed. The surface hydrograph is then routed through the storage available in a particular section of pipe. The surface hydrograph at the next downstream inlet is added, and the combined hydrograph is routed on downstream. Thus, the successive addition and routing of surface hydrographs produces an outflow hydrograph at the downstream discharge point. In the RRL method, the quality associated with the runoff is not computed. The application and use of the method is described in a recent EPA report [16].

Stanford Watershed Model (Hydrocomp Simulation Program) — The Stanford Watershed Model (Crawford and Linsley, 1966 [6]) along with its commercial successor, the Hydrocomp Simulation Program, is a comprehensive mathematical model that simulates watershed hydrology and flow routing. This model has been used extensively to simulate existing and planned surface water systems. Recently, it has been expanded to include water quality computations. It does not perform cost calculations, however, and has not been adapted to sewerage systems.

Urban Runoff Model — The Urban Runoff Model PDP-9 (UROM-9) was developed at the University of Minnesota for the Metropolitan Sewer Board, St. Paul, Minnesota [7]. The purpose of this model is to predict discharges in the Minneapolis-St. Paul interceptor sewers, given rainfall readings at various points around the Twin Cities. The model computes storm runoff from major catchments, combines the runoff with estimates of dry-weather flow, routes the combined flows through the interceptor system to the treatment plant, and computes overflows to the receiving water at control regulators. It uses monitored rainfall and flow level data from various points for real-time control of the overflows. The model has not been adapted to consider water quality aspects of the overflows. It is not intended for use for design purposes.

Urban Wastewater Management Model — The Urban Wastewater Management Model (Battelle-Northwest and Watermation, Inc., 1972) is a comprehensive mathematical model developed to continuously simulate time-varying wastewater flows and qualities in complex metropolitan combined sewerage systems [2, 17]. The model simulates major sewer system components, such as trunk and interceptor sewers, regulators, storage facilities, and treatment plants. It provides a means of evaluating the time-varying performance of a planned or existing sewerage system under a variety of rainfall conditions (considering both time and spatial rainfall variations) without simulating every pipe or manhole. The model simulates seven wastewater quality parameters: SS, BOD_5, COD, phosphate, nitrate, ammonia, and Kjeldahl nitrogen. The required operation of control regulators during real-time rainstorm events to minimize overflows is modeled. The model can also be used for design and planning studies. It computes sizes and costs of structural sewer system modifications, such as sewers, regulators, and storage and treatment facilities, that will result in the least-cost combination of alternatives for improving system performance.

Storm Water Management Model — The Storm Water Management Model (SWMM) (Metcalf & Eddy, Inc., University of Florida,

and Water Resources Engineers, 1971) was developed under the sponsorship of the EPA [19, 20, 21, 22]. It is a comprehensive mathematical model capable of representing urban stormwater runoff, storm sewer discharge, and combined sewer overflow phenomena. The SWMM has been demonstrated at more than 20 sites throughout the country ranging from 76 to 8,100 ha (187 to 20,000 acres). During demonstration, the SWMM has been verified to be capable of representing the gamut of urban stormwater runoff phenomena for various catchment systems [20]. This includes both quantity and quality from the onset of precipitation on the basin, through collection, conveyance, storage, and treatment systems, to points downstream from outfalls that are significantly affected by storm discharges. The SWMM is intended for use by municipalities, governmental agencies, and consultants as a tool for evaluating the pollution potential of existing systems, present and future, and for comparing alternative courses of remedial action. The use of correctional devices in the catchment, along with evaluation of their cost effectiveness, has also been demonstrated.

Application of Mathematical Models

The first step in model selection and application should be verification using local data. To this end, it is necessary to have data from one or more actual storm(s) for comparison with the computed values. For even a simple program that computes only the stormwater runoff hydrograph and routes it through the sewer system (without the associated quality), it is necessary to have data on the rainfall, catchment characteristics, sewer network, and measured sewer flows. As the programs become more and more sophisticated, additional input data are required. An example of the general data requirements for a comprehensive mathematical model is listed in Table 82.

Although the gathering of the mass of input data required for a very comprehensive model can be a formidable task, the use of such a model for evaluation of additions or proposed modifications to a sewer system can contribute to large cost savings.

The utility of model applications is illustrated in the following two examples representing a comprehensive approach and a "first cut" or roughing approach, respectively.

Example of Comprehensive Approach

The SWMM was applied in the Development of a Flood and Pollution Control Plan for the Chicagoland Area in 1972 [9]. The application spanned a two-year period.

Table 82. GENERAL DATA REQUIREMENTS, STORMWATER MANAGEMENT MODEL [19]

Item 1.	Define the Study Area (Catchment)
	Land use, topography, population distribution, census tract data, aerial photos, area boundaries.
Item 2.	Define the System
	Furnish plans of the collection system to define branching, sizes, and slopes. Types and general locations of inlet structures.
Item 3.	Define System Specialties
	Flow diversions, regulators, storage basins.
Item 4.	Define System Maintenance
	Street sweeping (description and frequency). Catchbasin cleaning. Trouble spots (flooding).
Item 5.	Define the Receiving Waters
	General description (estuary, river, or lake). Measured data (flow, tides, topography, water quality).
Item 6.	Define the Base Flow (DWF)
	Measured directly or through sewerage facility operating data. Hourly variation and weekday vs. weekend. DWF characteristics (composited BOD and SS results). Industrial flows (locations, average quantities, quality).
Item 7.	Define the Storm Flow
	Daily rainfall totals over an extended period (6 months or longer) encompassing the study events. Continuous rainfall hyetographs, continuous runoff hydrographs, and combined flow quality measurements (BOD and SS) for the study events. Discrete or composited samples as available (describe fully when and how taken).

Study Area – The study area encompassed a 970-sq km (375-sq mi) combined sewer area, of which 56 percent was within the limits of the City of Chicago. All major sewers and drains in the study area discharge to the Chicago River system (a series of natural and artificial waterways connected at the turn of the century to divert flows away from Lake Michigan and into the Illinois River). Altogether, there are more than 300 discharge points to the river system in its 120 km (75 miles) of waterway above the control works at Lockport, Illinois.

Step One – The consultant (Metcalf & Eddy, Inc.) applied the model to three large test areas selected by the city. One of these, Roscoe Avenue, an area of approximately 2,430 ha (6,000 acres), was selected because extensive monitoring data were available from an earlier Public Health Service study. The modeled results for several storms were compared with measured data on the basis of flow, BOD_5, and SS. The results were close, considering the difficulties in measuring flows and obtaining representative samples in very large sewers under storm conditions.

Step Two – The results were analyzed and adjustments recommended to improve correlation.

Step Three – The study area was broken down into approximately 60 subareas by combining adjacent catchment areas which could be assumed to overflow to the receiving water at a single point. These subareas were modeled by city personnel, trained and advised in the use of the model by the consultant.

Step Four – The waterways were modeled and appropriate controls and boundary conditions established. Dry-weather flow inputs were computed, including inflows diverted from Lake Michigan for flushing purposes. A comparison and correlation was made with extensive in-stream monitoring data which had been collected by the USPHS and a close fit established for flow, BOD_5, and DO.

Step Five – The Runoff-Transport results, prepared by city personnel and stored in tape files, were applied to the waterway model.

Step Six – Alternate storage-treatment schemes, developed by the city and its consultants, were tested, using the same input tape files, and the resulting modified output files were then applied to the waterway model and results compared.

Altogether, 18 plans were compared under each of four system constraints. The following conditions were fundamental to all plans:

1. Prevent backflow to Lake Michigan for all storms of record.

2. Satisfy applicable waterway standards (DO, coliforms).

The input hydrology spanned 21 years of rainfall record, including the largest storms in recorded history. The presently favored plans call for quarry (surface) storage in 2 or 3 units with treatment in conjunction with the existing dry-weather flow facilities.

Example of "First Cut" Approach

In a second application for a reconnaissance-level study for the District of Columbia [15], a simplified approach was successfully applied for determining the required storage volume for stormwater storage tanks coupled with alternative treatment rates. The procedure, similar to the mass-diagram or Rippl method for determining storage required in impounding reservoirs, lends itself to computer application. Assuming that the tank is empty at the beginning of the wet season, the maximum amount of stormwater that must be stored is equal to the difference between the runoff entering the tank and the amount drawn off to the treatment plant subsequent to the next wet period. By using daily or hourly rainfall records spanning several months or years, it was possible to determine both the maximum storage volume required and the presumed optimum storage volume/treatment rate to provide the most cost effective solution.

Increased use of simulation models to predict storm discharge and combined sewer overflow quantity and quality will allow many municipalities to evaluate the impact of changes or additions to their present sewer system more easily. The ability to evaluate a large number of alternatives in a relatively short period of time and for much less money (once the initial system has been computerized) is very attractive. The significant point is that, with comprehensive models, data can be developed on quantity (and quality, if desired) of storm discharges and combined sewer overflows that can be used in the decision-making process on problems concerning the handling of such discharges or overflows. This capability alone is a major landmark, because in the

past decisions on the amount of treatment or storage have, for lack of data, been somewhat arbitrary and without adequate consideration of the actual conditions in an existing combined sewer system.

MASTER PLAN EXAMPLES

Recognition of the pollution potential of combined sewer overflows and stormwater discharges, and concern about it, has emerged only during the last decade. While several large cities embarked on long-range sewer separation programs in the 1950s and earlier, these programs, in light of altered water quality objectives, are now subject to question and reevaluation.

Selected master plan examples demonstrating integrated approaches are summarized in Table 83. All represent combined systems, but the represented depths of investigations are widely varied.

The size and complexity of urban runoff management programs are so great that in-depth analyses, such as those of San Francisco and the city and metropolitan areas of Chicago, are rare. Other cities and metropolitan areas have contributed, frequently with EPA assistance, to limited-objective demonstration projects that explore alternative, and sometimes innovative, control schemes upon which to build master plan programs. Examples of both the in-depth approaches and limited-objective studies and projects are discussed herein for purposes of comparison.

An important consideration with respect to master plans is that regulatory constraints and public attitudes on pollution and environmental objectives are subject to change. The results tend to alter the ground rules for engineering assumptions so frequently that plans lacking flexibility may be or have become grossly outdated before implementation can be effected.

San Francisco, California

The San Francisco Master Plan for wastewater management has been under intensive development by the Department of Public Works and its consultants since 1969 [3, 8, 10]. Under the existing system, which is totally combined, overflows may occur whenever the rainfall exceeds 0.05 cm (0.02 inches) per hour. This happens approximately 80 times per year (on 46 days), through 41 bypass locations on the City's periphery, representing a total annual duration of approximately 200 hours. The estimated annual bypassed (overflowed) volume is 22,700 Ml (6 billion gallons).

Table 83. COMPARISON OF MASTER PLANS AND PROJECTS IN VARIOUS CITIES [8]

Item	San Francisco		Chicago	Boston	Seattle	New York	Washington, D.C.	
Year study completed	1972		1972	1967	1971	1968	1970	
Average annual rainfall, in.[a]	18.7		33.2	42.8	38.9	42.4	40.8	
Average summer rainfall (May-Sept.), in.	0.8		17.1	16.9	7.2	19.0	20.3	
Total combined sewered area, acres	24,000		240,000	12,000	23,400 (equiv.)	3,256	10,240 (DT) 4,066 (K)	
Proposed treatment capacity as a multiple of dry weather flow[b]	Alt. A	Alt. D					DT	K
	8.0	8.0	1.5	NA	3.0	1.5	5.0	2.0
Total storage capacity, in. runoff	0.10	0.63	3.14	1.84	0.05	0.26	4.31	1.58
Frequency of overflows per year	8	0.2	<0.2	<0.1	unknown	45	<0.1	1.0
Available level of treatment for captured flows	P	T	T	C	P	S	T	T
Estimated capital cost per acre[c]	$17,180	$36,940	$11,945	$61,905	$9,523	$6,523	$34,505	$16,840

a. At nearest major airport, 30 years of record.

b. Includes dry weather capacity where joint use planned.

c. ENR = 2000

Legend: P = primary
S = secondary
T = tertiary
C = chlorination only
DT = deep tunnel
K = Kingman Lake
NA = not available

Note: in. x 2.54 = cm
acre x 0.405 = ha
$/acre x 2.47 = $/ha

The conceived master plan will consolidate overflows to only 15 locations and reduce their probability of occurrence to eight times per year under a minimum program and to one time in five years under the maximum program. Control is to be achieved through a series of inland and shoreline storage basins (up to 30 to 45 total units) and conveyance/storage tunnels operated under extensive computer monitoring and control. Schematics of the basic components and their functional relationships are shown on Figure 74.

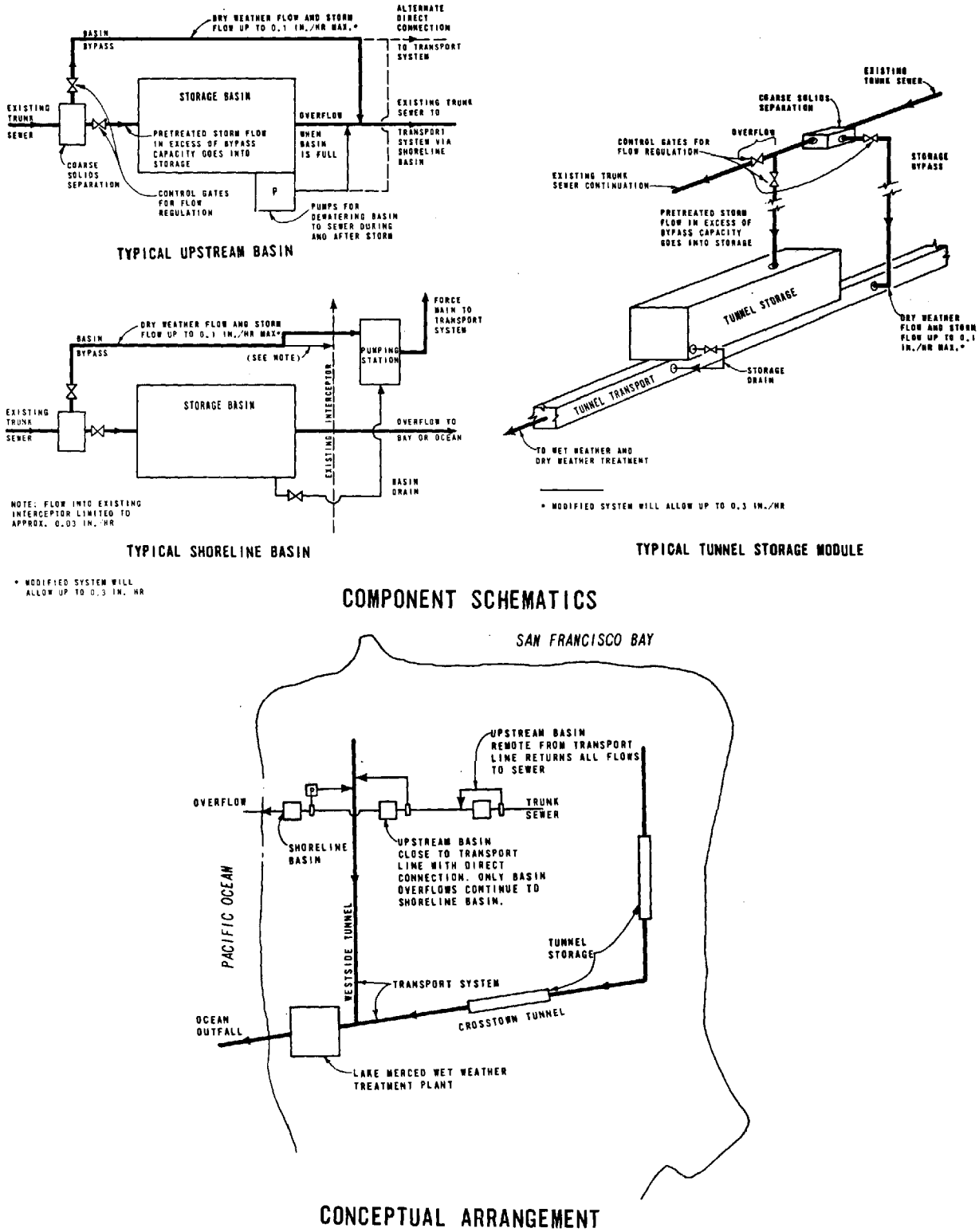

Figure 74. San Francisco master plan elements [8]

During the major portion of the year, wastes will receive secondary treatment at one of two dry-weather treatment plants. These treated effluents will be transmitted through tunnel and pipeline systems for ocean discharge approximately 6.4 km (4 miles) offshore. During storm conditions, flows exceeding the capacity of the secondary treatment plants will be transported to a 43.8-cu m/sec (1,000-mgd) plant for primary or higher-level treatment and the effluent discharged approximately 3.2 km (2 miles) offshore. Thus, the bypassing of untreated waste will be virtually eliminated, and a secondary benefit of flooding control (by the flow attenuating effects of upstream basins) will be achieved.

Significant within the plan, in addition to its advanced concepts of automated systems control and monitoring, are the relative wet-weather treatment capacity of 8 times the average dry-weather flow, the proposed use of physical-chemical treatment, and the approximate storage volumes of 10 to 50 percent of the runoff from a 1-year storm in the alternatives considered most feasible. The total program cost is estimated to be in the range of $450 to $900 million, combining both the dry- and wet-weather programs, and implementation is to be phased over a period of 30 years.

Chicago, Illinois

The Chicagoland area studies date back to the mid-1960s and the latest was completed in 1972 under the joint sponsorship of the Metropolitan Sanitary District of Greater Chicago; the Institute for Environmental Quality, State of Illinois; and the Department of Public Works, City of Chicago [9]. The criteria established for the comparison of alternative plans were to: (1) prevent backflow to Lake Michigan (source of potable water and high recreational use) for all storms of record; and (2) meet the applicable waterway standards (prescribe tertiary levels of treatment under dry-weather flow conditions and a high degree of treatment for all discharges). Backflow actions are emergency flood abatement measures wherein locks are opened permitting reverse flow in the canal system with resulting releases to and contamination of Lake Michigan.

In the final analysis, up to 4 modifications of each of 18 alternative plans were considered. The features of the recommended plan, incorporating conveyance tunnels, quarry storage, and low-rate feedback to dry-weather facilities for treatment, were discussed earlier in this section and in Section IX. An operational schematic of the system is shown on Figure 75. Of special interest are the provisions for selective bypassing should the storm exceed the system

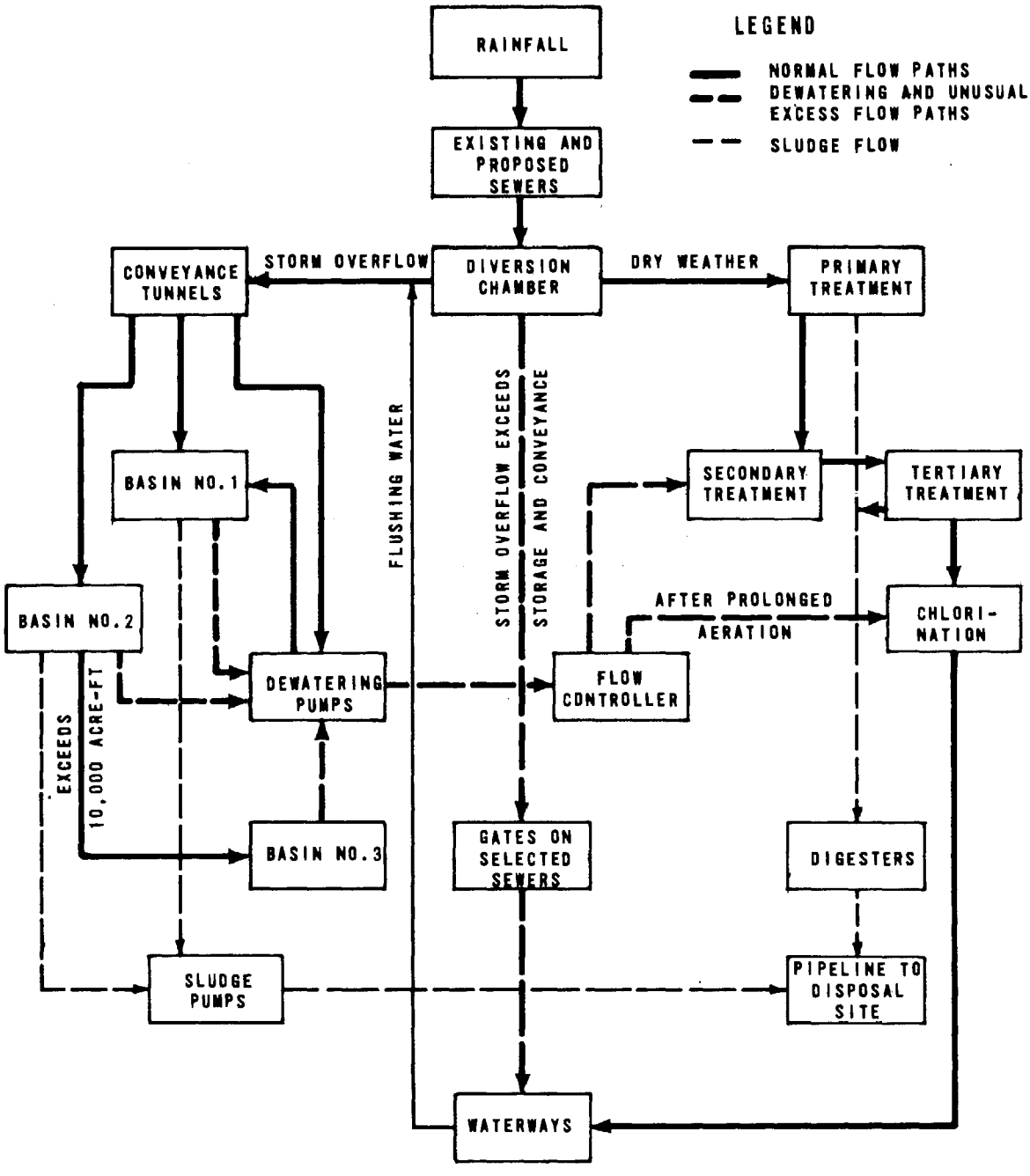

NOTE: ACRE-FT X 1,233.4 = CU M

Figure 75. Operational schematic of the recommended pollution control plan for Chicago [9]

capacity, the staging capabilities for filling the basins, and the provisions for alternative levels of treatment. The general operation is described as follows:

> ...Rainfall runoff and snow melt enters the sewer system mixing with household and industrial wastes. This combined flow travels through the sewers to a control or diversion chamber located near the waterways. In dry weather or very minor storm periods all of the flow is diverted to the existing interceptor for conveyance to the sewage treatment plants.
>
> In storm runoff periods exceeding the interceptor or treatment plant capacity, storm overflow passes through the drop shafts to the large conveyance tunnels under the waterways. Flow is conveyed to the storage reservoir, first in the primary basins Nos. 1 and 2. If flow exceeds 10,000 acre-feet, the capacity of the two primary basins, basin No. 3 will begin to fill. Immediately after the flows in the conveyance tunnels have subsided, the dewatering pumps are turned on at the principal reservoir site to pump the water in the tunnels...to the reservoir....The pumps have capacity to perform this operation in three days. Flushing water is then taken in from the waterway at selected drop shafts to clean certain conveyance tunnels.
>
> In the post storm period, the dewatering pumps will be operated to pump the stored water to the West-Southwest treatment plant. Pumping will be at a rate which when added to the plant, raw sewage influent will equal 1.5 times dry weather flow....
>
> In the very large storms, when the stored water has undergone prolonged aeration, increased pumping can be directed through the chlorination facilities and then to the waterways, if the quality of the aerated water would not violate waterway quality standards. However, this is not required as a part of the design.
>
> If the storm is of a magnitude that will exceed the storage or conveyance capacity, gates on selected gravity sewer systems can be operated to force the water to overflow to the waterway. Thus, in these rare events, priority can be given to small streams and the low elevation pumped areas. [9]

The total program cost, if phased over a 10-year construction period, is estimated to exceed $3 billion, of which approximately 45 percent is solely for wet-weather facilities.

Boston, Massachusetts

A wet-weather flow master plan, based largely on preliminary Chicago deep tunnel studies, was presented to the City of Boston in 1967 [12]. The four alternatives studied were: (1) complete separation, (2) chlorine detention tanks, (3) surface holding tanks, and (4) deep tunnels. Conclusions reached in the study were:

> At the present time [1967] no projects have been constructed or planned which will significantly improve water quality in the Boston area. To date, overflows of mixed sewage and storm water have been treated as minor problems, and solutions attempted have been and are totally inadequate. Because of the extremely high counts of coliform bacteria, indicative of pathogenic organisms in sewage, no relatively small amount of reduction in either the frequency, quantity or duration of overflows will significantly reduce the pollution hazards.
>
> The only solution worth the major effort required is one that would completely eliminate overflows. The proposed Deep Tunnel Plan for the Boston regional area appears to offer the best and the only feasible method for the elimination of overflows.
>
> Simply stated, the proposed Deep Tunnel Plan involves the construction, under the city, of large tunnels in rock, into which all of the overflows can be discharged through vertical shafts. The tunnels will store and conduct the overflows to a point where they can be screened, chlorinated and pumped through a long ocean outfall and disposed of into deep waters of Massachusetts Bay. [11]

The system was described as 4,860 ha (12,000 acres) of combined sewered area plus 4,050 ha (10,000 acres) of separately sewered area connected to the system for sanitary sewage flow transport.

The design basis was to capture completely the 15-year frequency 24-hour duration storm, assuming 90 percent runoff. A storage capacity of 4.64 cm (1.84 inches) of runoff was

indicated, coupled with continuous pumping to the ocean at rates up to 144,600 l/sec (3,300 mgd). The diffusers would be located 8.85 km (5.5 miles) from the nearest land area. The only treatment planned was chlorination (30-mg/l dose, 90-minute minimum retention time) with deep water ocean discharge and dilution ratios of 200 to 1 or better. A maximum of 2 days was allowed for dewatering the tunnels and, with this constraint, further treatment at the dry-weather flow facility (Deer Island) was considered unfeasible. To dispose of the runoff over a longer period was believed to entail a much greater increase in cost of storage than could be compensated for in reduced pumping (treatment) rate.

In May 1971, a demonstration surface detention and chlorination facility was placed into operation in Cambridge, Massachusetts, indicating a viable alternative to the deep tunnel plan (see Section IX). A new comprehensive evaluation, encompassing the entire greater Boston area, is now underway.

Seattle, Washington

Combined sewer overflow abatement activities in the Seattle area are described in a recent EPA report [14]. The project objectives are to:

1. Continuously monitor water depths and other factors needed to compute flows and capacities in sewers and treatment works.

2. Receive and process meterological data and predict runoff intensity and volume on the basis of historical records.

3. Reduce flow and store sewage in portions of the pipeline system to permit increased flow interception from areas experiencing high runoff rates.

4. Eliminate or reduce overflows to a level that would meet receiving water quality standards.

Toward this end, a series of remotely controlled and monitored regulator stations and a central control system were constructed (discussed earlier in Sections VIII and IX). Interception capacity is generally 3 times the estimated *future* dry-weather flow; thus, for many areas, excess capacity will be available for many years. The optimal utilization of this excess capacity, both for storage and accelerated interception and transport to treatment, is the key to the control system.

To supplement these capabilities, a partial separation project has been underway for several years. Approximately 7,290 ha (18,000 acres) of a total 14,580 ha (36,000 acres) of combined sewer area are presently programmed for partial separation, which is expected to result in a 70-percent reduction of flows in the combined system. All intercepted flows are presently given primary treatment prior to discharge. No special wet-weather treatment facility is contemplated presently.

This program first became operational in 1971. Highest priority is given to abating pollution associated with summer storm runoff. A 1-year frequency summer design storm having a peak runoff rate of 30 to 60 times dry-weather flow was cited in the report. The partial separation program, coupled with in-system storage, is expected to reduce the release of contaminants (total wet-weather) to the receiving waters by an estimated 30 to 50 percent. In the case of Lake Washington, a further reduction up to a total of 50 to 60 percent is anticipated by redirecting three-fourths of the new storm drainage out of the inland basin to the Sound. Early operations have been quite successful and programs are being developed and tested for complete automated control. However, population growth in the Seattle area will progressively reduce the available safe storage over a period of years and may largely offset improvements in system management.

Washington, D.C.

The District of Columbia started on a 50-year sewer separation program in the late 1950s. Costs for fringe areas separated to date have averaged between $51,110 and $76,660 per ha ($20,700 and $31,050 per acre). Recognizing the limitations of separation as a total solution, the program has not been funded since 1970, pending an assessment of alternatives.

A conceptual evaluation, completed under an EPA grant in August 1970, followed the earlier approaches in Chicago and Boston and recommended a system of deep rock tunnels and mined storage with dual treatment at Blue Plains (the regional dry-weather flow treatment plant) and a new wet-weather reclamation plant at Kingman Lake [4]. The storage would fully contain the combined area runoff (4,542,000 cu m [1,200 mil gal.] or 10.95 cm [4.31 inches] of overflow) from a 15-year frequency 24-hour duration storm. The combined treatment capacity of the two plants would be 19,275 l/sec (440 mgd); thus, they would be capable of dewatering storage from the 15-year storm in less than 3 days. The estimated

project cost of $353.3 million was approximately half the estimated cost for total separation and the benefits in reduced pollution were considerably greater.

A second study, completed concurrently and also funded by EPA, was made to investigate the reclamation aspects of combined sewer overflow abatement [5]. In this study, 662,375 cu m (175 mil gal.) of covered storage was recommended for a 1,645-ha (4,066-acre) area, which is equivalent to 4.01 cm (1.58 inches) of runoff. In addition, a 2,190 l/sec (50-mgd) wet-weather flow treatment facility was recommended to dewater the maximum storage volume in 3.5 days. The treated effluent would be utilized in a major water-oriented recreational facility, Kingman Lake. This natural appendage to the Anacostia River would be divided into two 18.6-ha (46-acre) lakes, one suitable for fishing and boating and the other for swimming. The treated effluent would be impounded in the fishing-boating lake and retreated in dry-weather periods in transit to the higher quality bathing and water contact lake.

The District recently engaged a consultant to review these and other alternatives and to recommend a Master Plan program. A reconnaissance level report was completed early in 1973, and a comprehensive analysis and action plan is expected within two years. The feasibility study plan found that storage of combined sewage within the core areas of the District with treatment of the captured flows at Blue Plains during and subsequent to each storm event to be the most cost-effective way of reducing wet-weather pollution of the receiving waters. A total storage capacity of 2,271,000 cu m (600 mil gal.), coupled with an average excess flow treatment rate of 10,950 l/sec (250 mgd), was estimated to be capable of limiting the average number of overflows to less than one per year. The annual overflow volume would be reduced by approximately 98 percent. Under this plan, the captured combined flows would be pumped to Blue Plains an average of 975 hours per year or 11 percent of the time. The maximum period that combined sewage would have to be stored would be 2.4 days [15].

ENVIRONMENTAL COMPATIBILITY

Facilities built for storm sewer discharge and combined sewer overflow abatement and control must be environmentally compatible from two different aspects: (1) they must meet the aesthetic requirements of the location, and (2) they must meet the abatement or control requirements from a receiving water quality standpoint. Care should be exercised during planning and construction to ensure that both of these criteria are met.

Characteristically, the location of storm flow pollution abatement facilities, based on need and cost constraints, will coincide with lands of high potential use and public access. It becomes imperative, therefore, that facilities not only perform effectively but that they do so without nuisance and that they enhance, not blight, the landscape. Many EPA Research, Development, and Demonstration projects have accomplished this task with distinction. A few of the more noteworthy are highlighted in this section.

Satellite Facilities

Satellite storage and treatment facilities, generally located near the intersection of a main trunk sewer and an interceptor, should receive priority consideration for aesthetic architectural treatment. These facilities usually are constructed in highly developed urban areas. In many cases, they are near, or within, public recreation areas. Examples include the Baker Street Dissolved Air Flotation Facility in San Francisco, the Cottage Farm Detention and Chlorination Facility in Boston, the Humboldt Avenue Retention Basin in Milwaukee, and the remotely operated regulator stations in Seattle. The addition in time and money required to enhance such facilities architecturally has resulted in increased public acceptance and, in some cases, increased real estate values.

The Baker Street Dissolved Air Flotation Facility, Figure 76, was built fronting on San Francisco Bay adjacent to a large yacht harbor and a popular public park. It is questionable whether most of the people who use the area even know there is a combined sewage overflow treatment facility there. Planter boxes have been incorporated into the design along with access hatch covers that double as benches. During the summer, there are usually a number of bathers sunning themselves on the seawall. The architectural treatment and low profile of the exterior of the building make it blend well with the surrounding area.

The Cottage Farm Detention and Chlorination Facility in Boston, Figure 39 (Section IX), is located on the bank of the Charles River across from Boston University. Because this reach of the river is a major boating and rowing recreation area, the storm flow detention tanks have been buried, and the surface has been planted with grass. The control and operations building blends well with the surrounding area.

The Humboldt Avenue Retention Basin in Milwaukee is located on the bank of the Milwaukee River, Figure 37 (Section IX). Although the facility is located in a present industrial

(a)

(b)

(c)

(d)

Figure 76. Baker Street dissolved air flotation facility, San Francisco

(a) General overview showing proximity to bathing beach (b) Control building and covered flotation tanks; tank access hatches serve as benches (c) View looking toward Golden Gate Bridge showing general landscaping (d) Control building looking toward yacht harbor entrance; note uncontrolled public access to facility

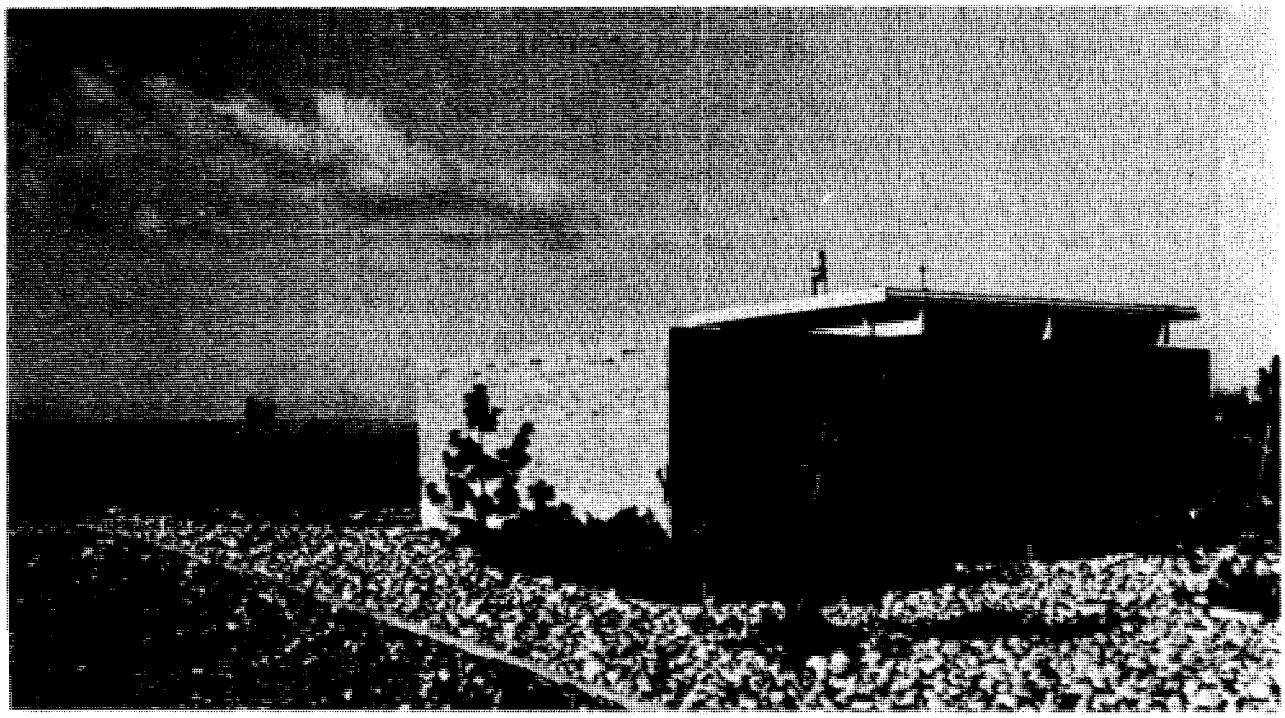

Figure 77. Remote-controlled regulator station
Seattle, Washington

area, aesthetics were a major consideration during design. The tank was buried and the surface was planted with grass, as was done at the Cottage Farm facility in Boston. The architectural treatment given to the control and operations building has produced a striking effect, while still providing vandal-resistant security. There has been no need to fence the tank area so it is open to public use.

The environmental compatibility of storm flow facilities is further demonstrated in the regulator stations in Seattle, Washington, as shown on Figure 77. One station in particular, the Dexter Avenue Regulator Station (not illustrated), serves a dual purpose, providing in addition to its storm flow control function both a minipark, complete with planted areas and benches, and a bus stop. The only evidence that the regulator facilities exist is a single access door in the retaining wall at the rear of the park.

Multiple-Use Facilities

Multiple-use facilities on a grander scale are demonstrated in the Kingman Lake conceptual plan and in the Mount Clemens combined sewer overflow reclamation facility, both discussed earlier in the text.

As a result of the public interest in abating pollution and the need for additional environmental and recreational facilities, the feasibility of a multipurpose project combining the collection and treatment of combined sewer overflows and recreational development in the Kingman Lake area was investigated [5]. The Kingman Lake area was recognized as having the potential to be developed as a major urban center for outdoor recreation. Yet in its present state the "lake" is fouled in part by combined sewer overflows and storm sewer discharges from the District of Columbia discharging to the Anacostia River. The conceptual plot plan for the project is shown on Figure 78. The general scheme of the project is the collection and storage of the combined sewer overflows followed by treatment of the overflows to a quality suitable for fishing and boating in the lower section of Kingman Lake and for public bathing in the upper section of the lake. Even a portion of the treatment facilities has been envisioned as having multiple uses with the surface of the covered storage basin being used as a parking lot and part of the route for trucks servicing the reclamation facility.

A system similar in concept but smaller in scale has been constructed and placed into operation in Mount Clemens, Michigan. The lakelets (described previously in Section XI) will provide a recreation area with boating, fishing,

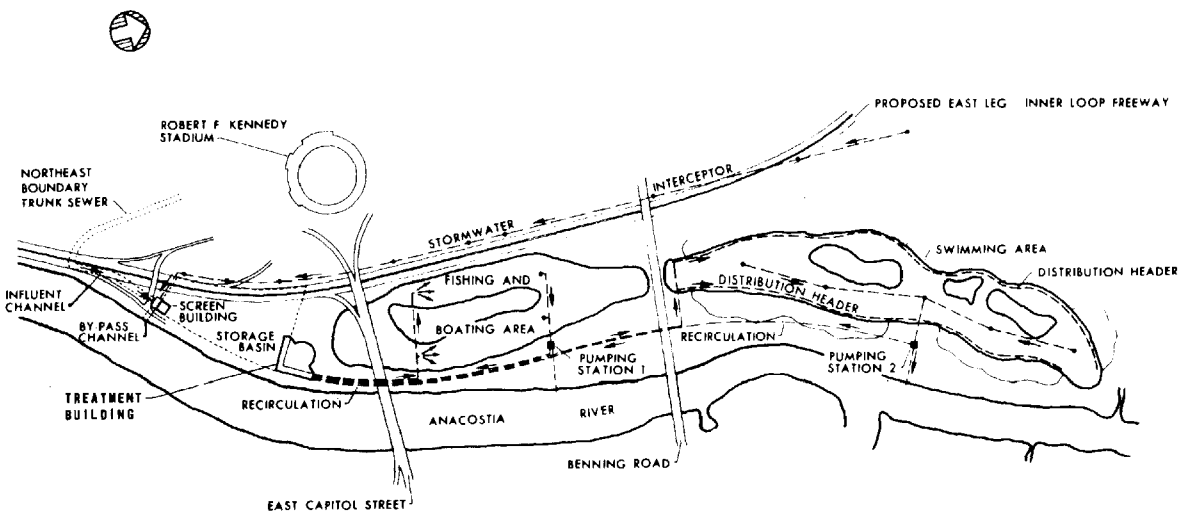

Figure 78. Conceptual plot plan of Kingman Lake water reclamation facility [5]

picnicking, etc., as well as a transitional buffer zone between residential developments and commercial industrial complexes. A model of the facility is shown on Figure 79. This project was the recipient of the Eminent Conceptor--1971 Consulting Engineers Council of Michigan Engineering Excellence Award, and was also the recipient of an Honor Award--1971 of the Consulting Engineers Council/U.S.A. Indicative of the project's success, the land around the pond site is being built up with high-rise apartment buildings.

Total Planned Communities

An appropriate final example is a new EPA project as a part of a planned community being developed near Houston [13]. Entitled "Maximum Utilization of Water Resources In a Planned Community," the study will focus on how a "natural drainage system" can be integrated into a reuse scheme for recreation and aesthetic purposes. Runoff will flow through low vegetated swales and into a network of wet-weather ponds, strategically located in areas of porous soils, as well as into variable-volume lakes. This attenuation process will allow some of the runoff to seep into the ground and retard

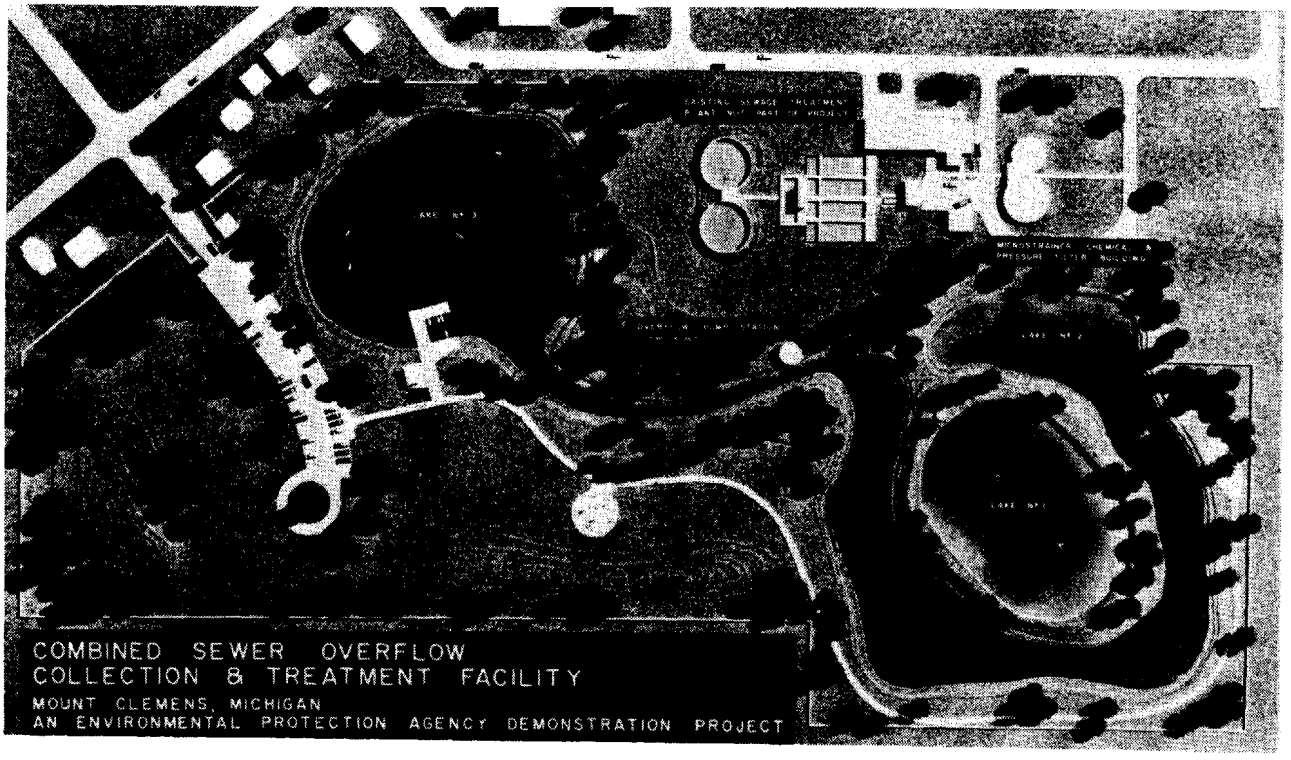

Figure 79. Combined sewer overflow collection and treatment facility, Mount Clemens, Michigan

the flow of water downstream, thus preventing floods caused by development. In addition, porous pavements will be utilized to further attenuate runoff, and the efficiency of street vacuum cleaning to reduce pollution load from streets will be demonstrated.

A 12-acre manmade lake, used as a pilot, will be the main focal point. Concentrations of various biocides, nutrients, and disinfectant residuals in runoff and their effect in the receiving lake system will be measured. Evaluation of a multiprocess and flexible stormwater pilot plant, which will treat runoff before it enters the lake, will also be part of this program. The pilot system evaluations will result in control recommendations for a larger 400-acre lake to be built in the future.

Considering urban runoff as a benefit as opposed to a wastewater, along with the concept of new community development which blends into and enhances its environment rather than upsetting it, will be employed and thoroughly evaluated for the first time. Hopefully, it will be shown that man and the natural environment can beneficially coexist.

Thus, as discussed in this section, integrated approaches, mathematical modeling, and environmental compatibility are both desirable and cost-effective adjuncts to wastewater management systems planning, design, and program implementation. Highlights pertaining to the operation and maintenance of storm flow facilities are detailed in the next section.

Section XV

OPERATION AND MAINTENANCE

The term maintenance in an engineering sense may be defined as the art of keeping plant equipment, structures, and other related facilities in a suitable condition to perform the services for which they are intended [12]. Operation of a storm flow system requires not only the physical operation of the various components but also their operation *in unison and on-call*. The components include the wet-weather treatment facilities, the dry-weather flow treatment facility, the collection and control network (whether multiple systems or combined), and the sludge-handling and disposal program.

A perspective of the problems, such as high turbulence, flow momentum, vast areas of tankage and channels, and restrictive environment, encountered may be seen on Figure 80 which illustrates a combined sewer overflow detention facility *before, during, and after* a storm event. Note the relative scale of the facilities from the figure in photo (e). One of the most remarkable insights from the series of photographs is that all were taken within the space of a few hours.

Discussed in this section are operating controls and options, sustaining (dry-weather) maintenance, support facilities and supply, safety, and solids-handling and disposal. The importance of each one of these aspects of operation and maintenance cannot be overemphasized. If the facility does not come on-line when needed, nothing will be accomplished. If it is not kept in good repair, the results may be catastrophic. Finally, if provisions are inadequate for the removal and ultimate disposal of the separated solids, a greater problem may have been generated than solved.

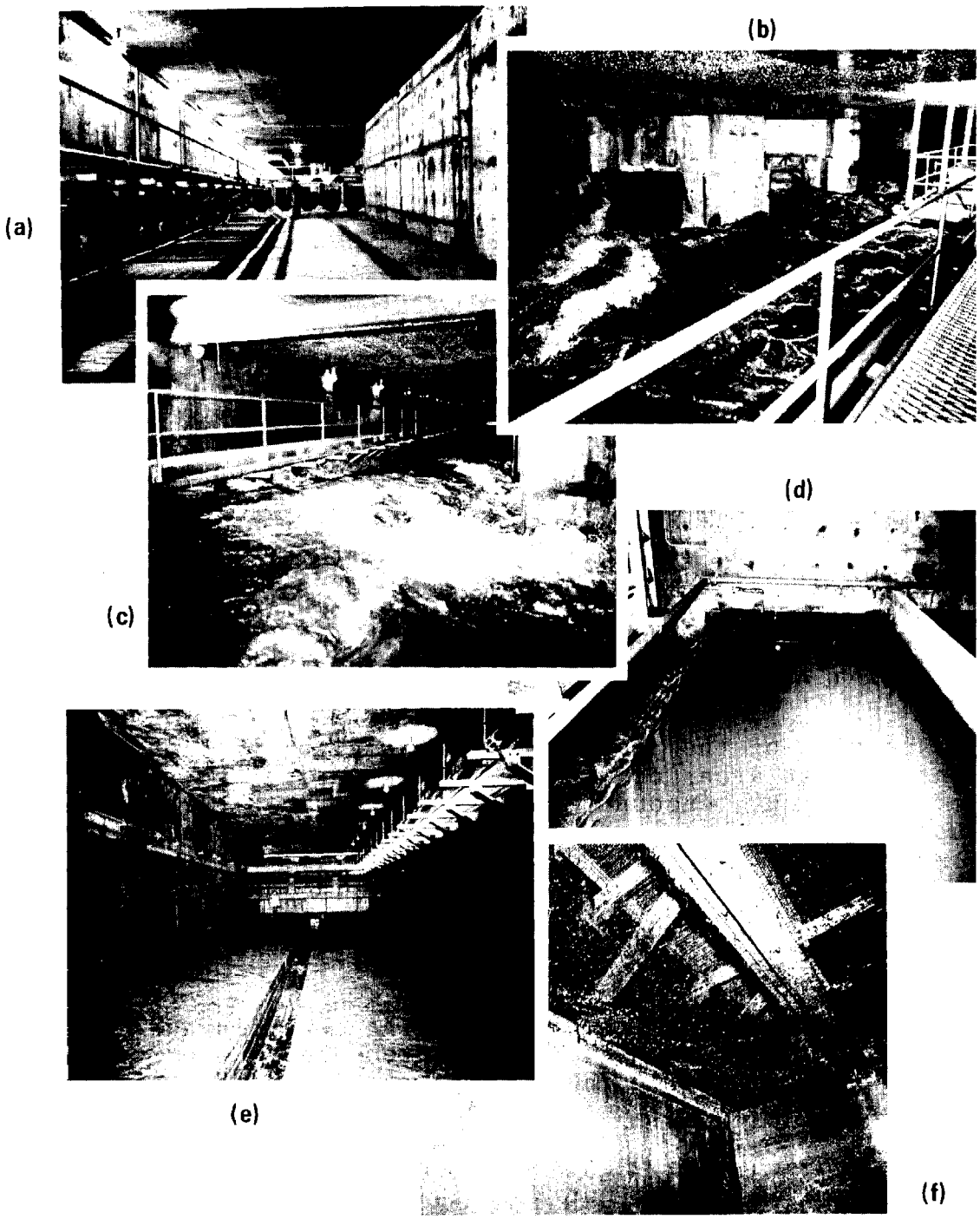

Figure 80. Stormwater detention facility (Boston): before, during, and after storm event

(a) Distribution channel before storm (b), (c) and (d) Distribution channel and detention/contact tank (effluent weir) during operation (e) and (f) Residual solids in tank and on effluent horizontal fine screens after storm

OPERATING CONTROLS AND OPTIONS

Operating controls can vary from simple orifices and other static devices to complete computer-run automation. The options range from flow routing and control to equipment startup and shutdown, to chemical feed, to process adjustments and equipment surveillance, and finally, to alarms and emergency action.

Collection system control has been discussed in Section VII. A brief review of the control panel from a storm flow detention-chlorination facility, shown on Figure 81, will serve to illustrate typical off-line facilities control. Equipment status and a simplified flow diagram are displayed across the upper half of the board, and actuating

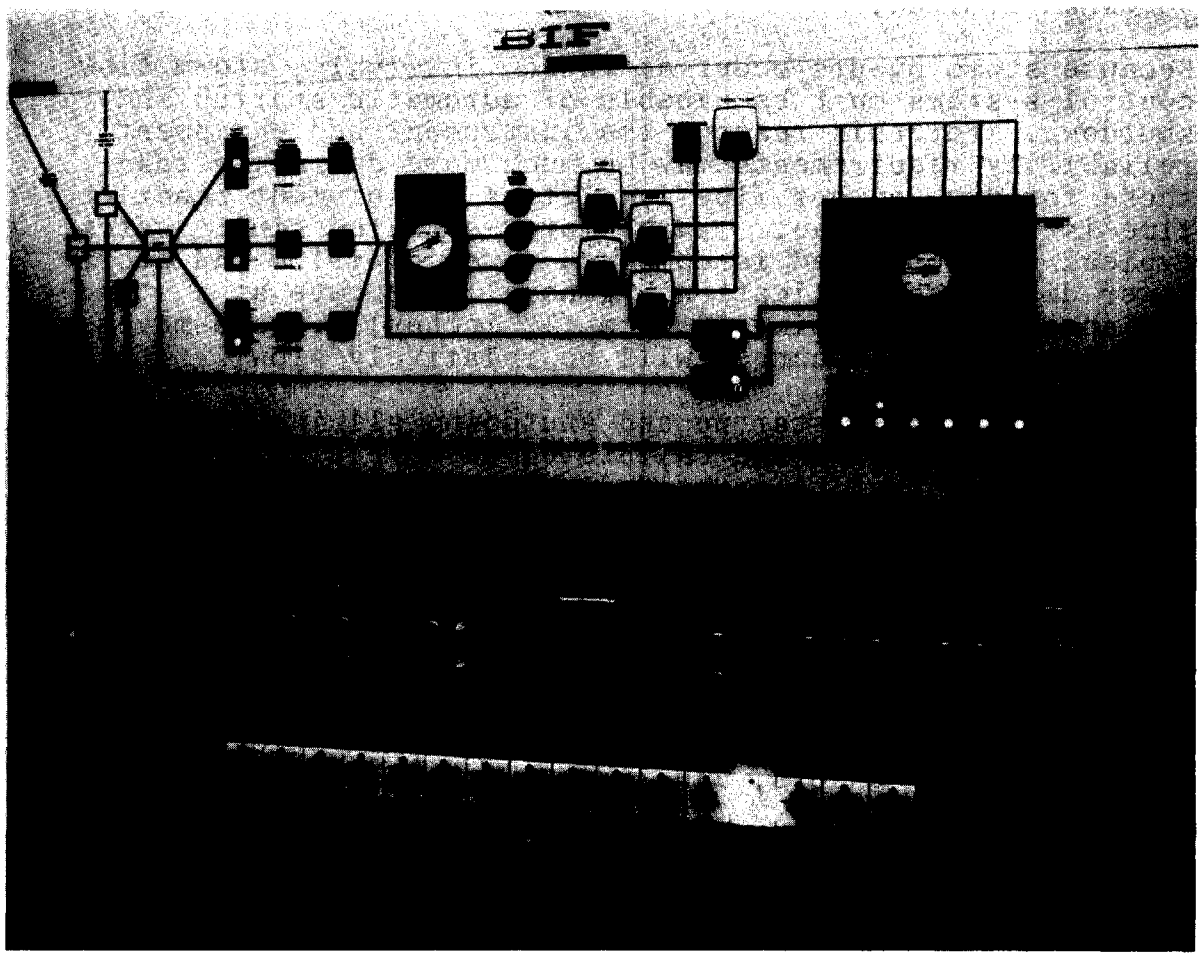

Figure 81. Control panel at the Cottage Farm detention and chlorination facility (Boston)

devices and alarms are arranged below. For example, reading from left to right are the status lights (open, throttled, closed) for three inlet sluice gates with their H-O-A (HAND-OFF-AUTOMATIC) control switches below; the sets of coarse and fine screens similarly controlled; the wet well level; the main sewage pumps (level-controlled); the pump discharge flow rates; the level in the detention tanks; and finally, the chlorine residual monitor. The important thing, again, is that the facility come on-line when needed and that it be able to protect itself and/or the public from major danger (e.g., automatic closure of inlet gates coincident with high wet well level alarm).

Several examples of operating controls and options are presented in Table 84. Note that the various control devices are fairly diverse, while the monitoring or status-indicating devices to which the control devices react are somewhat limited.

Because storm events occur at random intervals, storm flow control systems must be capable of automatic startup and shutdown. For this reason, the instrument and equipment reliability requirements may be much more demanding than those for dry-weather flow facilities. Equipment reaction time is very important. Large motor-operated sluice gates, typical of those used in combined sewer overflow and storm sewer discharge applications, generally operate at a standard speed approximating 30.5 cm (12 inches) of gate movement per minute; thus, changes will be relatively slow.

To ensure reliable startup and shutdown, all instrumentation must be checked and calibrated on a regular basis. All equipment must be exercised regularly to check and ensure readiness, and facility cleanup, lubrication, and dewatering must be done following each storm. Degradation of the retained flow and solids must be expected with increased retention times, and dewatering rates must be selected accordingly.

Components crucial to the operation, such as valves, flowmeters, chemical feeders, telemetry equipment, level sensors, pressure sensors, and limit switches, should be furnished with standbys to provide protection against operational failure.

Careful planning and design of combined sewer overflow and storm sewer discharge facilities permits minimization of cleanup and maintenance via increased automation. It must be remembered, however, that there will be a break-even point between capital costs and operation and maintenance costs for every system.

Table 84. EXAMPLES OF COMBINED SEWER SYSTEM OPERATION CONTROLS

Location, [Ref.]	Operation scale	Operation controlled	Monitoring devices	Control devices
Seattle, Wash. [14]				
Regulators	Full	Overflow quantity	Level sensors, rain gages, wind gages, automatic samplers, telemetry units, computer, position sensors	Gate regulators, tide gates, pumping stations by remote centralized operation
Boston, Mass. [7]				
Cottage Farm Storm Overflow Detention and Chlorination Facility	Full	Overflow quality and quantity	Level sensors, automatic sampler, Dall tube, residual chlorine analyzer	Pumping station, sodium hypochlorite feeder, gate regulators
Dallas, Tex. [11]				
Bachman Creek Polymer Injection Station	Full	Sewer surcharge	Level sensor, magnetic flowmeter, temperature probe, computer	Polymer injection feeder
San Francisco, Calif. [9]				
Baker Street Dissolved Air Flotation Facility	Full	Overflow quality	Magnetic flowmeters, level probes, differential pressure sensor	Polyelectrolyte feeders, solids pump, bypass gates, dissolved air flotation units
Mount Clemens, Mich. [13]				
Combined Sewer Overflow Collection and Treatment Facility	Full	Overflow quality	Magnetic flowmeters, level probes, automatic samplers, differential pressure sensors	Pumping stations, aerated lagoons, microstrainer drive, pressure filters, chlorine-chlorine dioxide feeders
Milwaukee, Wis. [2]				
Humboldt Avenue Combined Sewer Overflow Detention Tank	Full	Overflow quality and quantity	Level sensors, automatic samplers, magnetic flowmeters	Mixers, chlorinators, bar screen
Minneapolis, Minn. [8]				
Regulators	Full	Overflow quantity	Rain gages, computer, pressure sensors	Fabridam regulators, gate regulators by remote operation

SUSTAINING (DRY-WEATHER) MAINTENANCE

Sustaining, or preventive, maintenance is the one key to a successful storm sewer discharge or combined sewer overflow pollution abatement and control system. The performance of many existing systems could be greatly improved by strict adherence to a well-planned sustaining maintenance program. An example of what can result from a poor or nonexistent maintenance program is illustrated in one of the conclusions

drawn by investigators looking into the status of the ten sewage collection systems contained in that portion of the Hudson River Basin which lies within the waters of the Interstate Sanitation District (Connecticut, New Jersey, New York):

> In far too many cases, the personnel assigned to regulator maintenance duty are not properly equipped with either maintenance tools or the necessary safety equipment to properly service the regulators. A noticeable lack of understanding on the part of many of the maintenance personnel as to the purpose and proper operation of regulators was evident during field inspection. Additionally, many of the regulators were intentionally jammed or chained in the open position to maximize wet weather flow to the treatment plant. This can create a threefold problem of (a) an imbalance of sewage mixture from each regulator drainage basin during wet weather flow; (b) an unreasonably high wet weather flow to the treatment plant which in turn minimizes the effective treatment of this sewage; and (c) a surcharge of the interceptor system with associated local flooding of sewage into streets and basements. [5]

There are two general categories of combined sewer overflow and storm sewer discharge pollution abatement and control facilities requiring sustaining maintenance: in-line and off-line. The in-line facilities include various types of regulators, tide gates, polymer injectors, flushing systems, and flow and quality monitors. Off-line facilities include the various physical, biological, and physical-chemical treatment processes, as well as large storage facilities. These are generally much more sophisticated than the regulators.

In-Line Facilities

Generally, the sustaining maintenance required for regulators and tide gates increases as the degree of collection system control increases. For this reason the overall maintenance required increases as the complexity of the regulators increases (from static to semiautomatic dynamic to automatic dynamic). All regulators and tide gates are subject to the main problems of corrosion and clogging by debris. Detailed maintenance problems of the most common types of regulators are discussed elsewhere in the literature [4]. Maintenance problems associated with the

more recently developed regulators and other in-line facilities are discussed here.

Regulators – Static regulators require periodic checks to ensure that weirs and orifices have not become clogged or blocked. Floatables and deposited solids may need to be flushed into the interceptor to prevent their accumulation and the formation of nuisance problems. Included within this category are vortex, horizontal and vertical orifice, and spiral flow regulators; swirl concentrators; and side-spill and high side-spill weirs.

Semiautomatic dynamic regulators (such as tipping gates, cylindrical gate, and float-operated regulators) also require periodic inspection and maintenance. Regular lubrication of pivot points, bearings, and mechanical linkages is necessary. Floats and linkages must be free of debris to ensure smooth operation. Metal parts should be checked for corrosion. Orifices must be free of clogging and debris to ensure correct operation of the regulator. Cylinder seals must be tight.

Broad-crested inflatable fabric dams are not usually subject to clogging or jamming since they can be deflated. However, even when deflated, some buildup of solids occurs immediately upstream and requires periodic flushing. Fabric dams must be inspected regularly for punctures. The sophisticated control system, consisting of compressors, solenoid valves, sealed potentiometers, pressure transducers, etc., requires attention from skilled maintenance personnel. In a demonstration project in Minneapolis-St. Paul [8], about 50 percent of the Fabridams had to be replaced in the first two years of service (one after only one month). Most failures were due to problems with anchorage, which is extremely critical. Other failures were related to air leaks, punctures, and autodeflation. Two of the failures were described as "catastrophic," indicating the failures occurred with considerable sewage in storage, thereby releasing flood waves through the overflow pipes. Now, however, after 4 years of operation, 13 of the original 15 regulator stations are still in service. The weekly sustaining maintenance and inspection time for these stations involves approximately 12 to 16 hours by electricians and 120 hours by interceptor servicemen.

Fluidic regulators require periodic inspection to make certain that control system components are not clogged. The control system piping should be checked for air leaks at joints and seals. Occasional flushing of sediment and accumulated solids may be necessary after long periods of dry-weather flow.

Tide Gates – Periodic inspections are necessary to ensure correct operation. Lubrication of pivot points is a regular requirement. Hinge arms and gate openings must be checked regularly to be certain they are free of trash, timbers, or other debris that might keep the gate in a partially open position allowing inflow to the sewer system. The seating surfaces, subject to corrosion and warping, should be inspected to ensure positive sealing. At locations where numerous tide gates are used, remote alarm proximity switches should be incorporated in each gate. Such alarms would notify plant operators or maintenance personnel of tide gate openings or malfunctions along with malfunctioning regulators.

Other In-Line Facilities – Polymer injection facilities require checking of the storage tanks for leaks. Dehumidification equipment must be operational to prevent solidification of the polymer during storage. Injection pumps, mixers, and polymer feeders should be checked for clogging. Sewer liquid level sensors should be checked and cleaned periodically.

Regular inspection and maintenance of flushing systems is required to prevent corrosion and clogging. If sophisticated control systems are employed, skilled maintenance of valves, operators, etc., is necessary.

Capacitance probes, bubble tubes, and pressure transducers used for flow depth measurement require constant attention to prevent clogging or coating with grease. Any depth-measuring device presenting an obstruction to flow must be inspected regularly for structural damage. Instruments must be checked and calibrated regularly and require highly skilled maintenance.

A very graphic example of the types of problems encountered in one study pertaining to monitoring combined sewer overflows follows:

> During the monitoring program, several operating problems were encountered, the most significant of which were:
>
> 1. Difficulties in Pumping Wastewater Up from the Sewer--The submersible pump anchored to the bottom of the sewer was often clogged by solid wastes (such as cans, rags, wire, wood chips, tree stems, gravel, sand, etc.) and stopped working. There were also some pump stoppages during low-intensity storms, probably because of insufficient water depth in the sewer.

2. Physical Damage to Equipment Installed in the Sewer--During intense storms, heavy solid wastes (such as tires, concrete slabs, 55-gallon drums, mattresses, automobile radiators, chains, etc.) slammed into the protective cages of the submersible pumps and caused extensive damage to various equipment items. Bubbler lines were broken and torn loose; the protective cage was severely deformed and even disintegrated; pump braces were sheared off; pumps were washed away in the sewer; and the electric conduit was pulled out of its fastening studs.

3. Flooding of Lithium Chloride Release Station at Rose Park Playground--This station was sunk half way into the ground, at the request of the local residents. Consequently, the lower part of the structure was inundated by excess storm water runoff. This flooding caused minor damage to the bubbler instruments, the lithium chloride release system and the pressure-to-current transmitter. This problem was overcome by reinstalling the equipment above grade.

The equipment malfunctions and physical damage described above prevented complete coverage of all the storms that occurred during the monitoring period. [3]

Off-Line Facilities

Usually off-line treatment or storage facilities are larger and of more sophisticated design than in-line facilities. Several subtasks are integrated to accomplish the overall treatment task. Effective control and operation of such facilities are usually dependent upon varying degrees of instrumentation. This may range from a simple liquid level sensor all the way to highly instrumented, fully automated operation.

Required maintenance common to most off-line facilities may include lubricating of equipment; inspecting and cleaning of chemical pumps, electrical and pneumatic sensing probes, flow measuring and recording devices, and automatic samplers; checking and calibrating instruments; checking emergency power generators and starting batteries; and inspecting all pumps, valves, and piping. All equipment should be

operated for short periods at least twice a month. Good general housekeeping is essential for both successful operation and safety.

Maintenance problems peculiar to some of the more commonly used off-line abatement and treatment processes are described in the following discussion.

Physical Processes — Sedimentation basins and dissolved air flotation sludge holding tanks and flotation chambers should be dewatered and cleaned following each storm to prevent nuisance odors and restore full treatment capacity. Solids removal equipment, pumps, and other auxiliary equipment should be cleaned, inspected, and lubricated on a regular basis. Pretreatment devices, such as fine screens and cyclone grit removers, may require special attention. Chemical metering, mixing, and injection equipment should be serviced after each storm.

Screening devices, such as rotary fine screens, drum screens, and microstrainers, should be thoroughly inspected after each storm. Special attention should be given to the condition of the screens because they are susceptible to damage from sharp objects (causing rips, tears, or breaks), grease blinding, and algae growths. Screens should be cleaned or replaced as necessary. The equipment should be lubricated and operated on a regular basis during dry-weather periods.

Filters should be visually inspected after backwashing to verify their cleanliness. Pumps, valves, and other auxiliary equipment should be checked and serviced regularly. Disinfection may be necessary to prevent biological growth within the filter. Sludge holding tanks must be cleaned after each storm. Chemicals and polymers must be replenished, and metering and mixing equipment must be cleaned and inspected. The strength of the stored disinfectant should be monitored.

Biological Processes — Generally, biological processes do not require the detailed after-storm maintenance needed by physical processes. This is true because biological combined sewer overflow treatment processes are usually operated as, or in conjunction with, dry-weather flow facilities. They therefore receive the same maintenance care as the dry-weather facilities. Generally, it is necessary only to wash down the facility following a storm. During extended dry-weather periods, such equipment as pumps and valves, used only during combined sewer overflows, should be operated on a regular basis.

Lagoons require only minor maintenance, mostly of a cleanup nature, unless aerators are used. Aerators require periodic inspection and lubrication. The general ongoing maintenance required by lagoons is aquatic weed removal, embankment and access road inspection and repair, vegetation control, and periodic removal of accumulated sludge deposits.

Physical-Chemical Processes – Physical-chemical processes are generally rather complex in that considerable auxiliary equipment is required for their operation. This includes pumps, valves, instruments, chemical feeders and mixers, etc. Skilled personnel are required to maintain and calibrate the instruments and process controllers on a regular schedule. Sludge holding tanks must be cleaned following each storm. If recalcination and carbon regeneration equipment is used, special maintenance is usually required, especially for the instrumentation.

Practices for Improved Operation and Maintenance

Satisfactory operation of both in-line and off-line combined sewer overflow abatement and treatment facilities depends, to a large extent, on adequate regular inspection and maintenance. The purpose of this is twofold: first, to locate and correct any operational problems or failures and second, to prevent or reduce the probability of such problems or failures.

Inspection should be as frequent as necessary to keep such facilities in good operating condition. Generally, this means inspections both on a weekly schedule and following each major storm. Regulators with small orifices or drop inlets with grates may require more frequent inspection. It is recommended, however, that no regulator or tide gate be inspected less frequently than twice each month and after each storm [6]. This also applies to off-line facilities.

Maintenance of regulators should be carried out by crews of three to five men, depending on the type and complexity of the regulators used. A minimum crew of three men is recommended so that one man may remain at the surface while the other two enter the chamber. Other appurtenances, such as gate operators, depth probes, and telemetry equipment, may require additional highly skilled maintenance personnel.

Maintenance of off-line facilities should be carried out by as many men as necessary to complete the job rapidly and *safely*. This will, of course, depend on the size and complexity of the facility. For example, in the Humboldt Avenue Detention and Chlorination Facility demonstration project [2], it was assumed that normal tank operation would

require the attention of one man for approximately 2 hours per day, seven days per week, plus special visits during and immediately following each period of rainfall. Prior to tank startup, it was further assumed that two men would be required full-time to operate and maintain the tank equipment through a 3- to 6-month shakedown period. Because of equipment malfunctions and because it was necessary to obtain maximum benefit from the facility, the two-man operation was extended a full year. The tendency to underestimate actual staffing requirements appears common to most, if not all, of the demonstration projects surveyed--largely because of the unusual and demanding service requirements.

Complete records should be kept of all inspection and maintenance. The time and date of each inspection should be recorded, together with a description of the condition of the equipment and the work performed. The number of man-hours spent on each piece of equipment should be noted. These data should be tabulated for each piece of equipment and summarized for each facility, thus quickly revealing any equipment requiring excessive maintenance or that is out of service with unusual frequency. These records can provide the data needed to compare the cost and efficiency of different types of equipment for guidance in the design and purchase of new equipment or the remodeling of existing equipment. Such records also aid in the scheduling of preventive maintenance.

Maintenance Costs

The costs for maintaining sewer regulators, as reported in a recent national survey, are presented in Section VIII. Maintenance costs for off-line facilities are also presented in the discussion of the various different processes in Sections IX to XIII. Adjustments and the basis of costs are noted with the presentation of the costs.

SUPPORT FACILITIES AND SUPPLIES

The importance of maintenance support in the operation of both in-line and off-line control and treatment facilities increases as the number and/or size of such facilities increases. In view of the wide variety of control and treatment processes, no attempt will be made to cover the specific requirements of each individual process; only the common general requirements will be discussed. The four major requirements are (1) access to equipment, (2) adequate tools and equipment, (3) a specialized work area, and (4) spare parts stock.

The layout of control and treatment facilities should meet two criteria: (1) hydraulic requirements, and (2) operation and maintenance requirements. Very often, insufficient attention is given to operation and maintenance requirements. As a result, on-site maintenance may be badly hampered by lack of maneuvering space and room to use tools. The resulting inadequate maintenance may cause improper operation or failure of the equipment. Access means providing not only adequate servicing room, but also room and a means for removing the equipment from the structure. Invariably (in accordance with one of Murphy's Laws that if anything can go wrong, it will) every piece of equipment installed, at some time for some reason, may have to be removed. It is usually expensive to remove equipment by dismantling it and even more expensive to have to demolish a portion of the structure. Thus, attention should be paid to providing access and working room when designing control and treatment facilities.

Adequate tools should be readily available to perform the necessary maintenance. The nature of the tools stocked at any facility will be dependent on the particular type, size, and equipment involved. At a small facility where little or no mechanical equipment is used, only a few tools are needed. At a large plant, on the other hand, necessary tools and equipment may sometimes be extensive.

The following items are considered necessary for maintaining in-line control facilities [6]:

1. A half-ton panel truck with a two-way radio, winch, and A-frame

2. A portable generator

3. Two submersible pumps

4. A blower unit

5. Various chains, ropes, hoses, ladders, pikepoles, sewer hooks, sewer rods, chain jacks, tool kits, etc.

6. Sewer atmosphere testing meters, safety equipment, helmets, harnesses, first-aid kits, danger flags, signs, barricades, life jackets, gas masks, air packs, gas detector lamps, fire extinguishers, extension cords, protective clothing, etc.

7. Various spare parts

Maintenance shops are usually required in support of off-line treatment facilities. Occasionally, in-line control and treatment facilities also include large pieces of equipment. The importance of shops in the operation and maintenance of treatment facilities increases with the size of the plant. Shops may be classified as general repair shops and machine shops. These shops should be in the same building in adjoining rooms.

A single shop should be capable of supporting several in-line facilities and, possibly, several off-line facilities also. This is dependent on the number, size, and location of the facilities. It may be possible to expand existing dry-weather flow treatment plant shops to handle the additional maintenance. Cost savings can usually be expected when using this centralized maintenance concept. Wet-weather maintenance shops should be equipped and laid out similarly to those for dry-weather treatment facilities because most off-line wet-weather treatment facilities have maintenance requirements similar to those required for dry-weather treatment processes.

Since storm events occur without regard for unfilled parts orders or shipping dates, a spare parts inventory is essential as a backup to any maintenance program. A large stock of all parts is unnecessary, but those most subject to wear and frequent breakage should be on hand. This involves a storage room or compartments where these parts may be protected until used. This section of the maintenance facility should be separate from the repair shop itself so that it may be locked up and parts dispensed as necessary under an inventory system.

Administration facilities should be centralized by making use of existing dry-weather facilities, if possible. This avoids unnecessary records duplication and affords easy data assembly and analysis.

SAFETY

The Occupational Safety and Health Act (OSHA) of 1970, which became effective April 28, 1971, applies to every employee in the United States and its territories. The Act specifies three areas of principal concern:

1. Record-keeping requirements related to employees.

2. Rules and regulations pertaining to design features and safety requirements of facilities.

3. Rules and regulations pertaining to construction safety practices and precautions.

The hazards are a function of the working environment, operating procedures and practice, and condition and design of facilities. Sewage works deaths reported are considerably higher on a man-hour basis than those occurring in machine shops. Deaths in sewer manholes have been as many as 12 in a 2-year period and, in one case, 2 men died and 2 others were overcome, all in the same manhole.

> In Westchester County, New York, 1956, two men lost their lives by entering a manhole on a large diameter sewer to rescue a third man who had collapsed. The rescuers apparently were overcome and were swept away through the large sewer. Their bodies were recovered five hours later, a half mile down stream. [12]

The intention here is not to give a full synopsis of safety considerations, but rather to furnish a reminder that storm flow management applications expose personnel to very real and very dangerous environmental conditions. For example, in connection with sewer gas:

> *Sewer Gas* is a misnomer since it is not a single but a mixture of gases from the decomposition of organic matter. It is actually sewage sludge gas with a high content of carbon dioxide and varying amounts of methane, hydrogen, hydrogen sulfide and a small amount of oxygen. The hazard is usually from an explosive mixture of methane and oxygen or, more often, from an oxygen deficiency. This definition does not include the extraneous gases or vapors which may be present in sewers from gas main leaks or from gasoline or other volatile solvents which frequently find their way into sewers. [12]

The chemicals used or stored, such as chlorine, present another problem because of their toxicity, corrosiveness, etc. Plant features, such as railings, kickboards, safety treads, multiple access/egress points, ventilation, lighting, auxiliary power sources, and detection and observation points, must be fully incorporated into design and practice.

SOLIDS HANDLING AND DISPOSAL

Often, on process flow diagrams, the solids disposal problem is solved simply and easily by showing an arrow pointing off the diagram labelled "to solids disposal." In actuality, solids disposal is one of the largest problems faced by operators of treatment facilities. In stormwater and combined sewage treatment facilities, the solids disposal

problem may be orders of magnitude greater than that at separate sanitary sewage treatment plants. For example, the deposited solids in a combined sewer available for resuspension by storm flows may be similar to those shown on Figure 82.

The removal of solids deposited in sewers used for storm-water storage is a definite problem. One method for removing deposited solids is that used in the Red Run Drain Area near Detroit [1]. There, the detention structure, 19.8 meters by 6.1 meters by 3.35 km (65 by 20 by 11,000 feet), is being constructed with a partially sloping bottom leading to a central trough and a flushing system. Nozzles spaced at 2.03-meter (6.67-foot) centers along the ceiling at the outer walls discharge flushing water at rates up to 12.6 l/sec (200 gpm) to wash down the walls and the bottom to the central trough, as shown on Figure 83. Other sewer flushing methods are described in Section VIII. The remainder of this section will deal with the handling and disposal of solids from storm sewer discharge and combined sewer overflow treatment facilities.

The problem of solids handling and disposal from off-line combined sewer overflow facilities is threefold: (1) estimating the quantities, (2) collection, and (3) ultimate disposal.

Estimating Solids Removal

One of the greatest handicaps to the designer of combined sewer overflow abatement facilities is the lack of viable data on the amount of solids to be expected. This presently inadequate data base will be bolstered as further operating experience with the various demonstration projects is gained. Sharp departures from the norm must be expected, however, in individual applications. EPA is presently sponsoring a project to determine the solids content of combined sewer overflows.

Solids removal and disposal methods for several combined sewer overflow treatment demonstration projects are listed in Table 85. The figures listed in this table have been calculated from reported data and are presented here only to indicate orders of magnitude.

One item of major interest is the comparison of the solids resulting from normal dry-weather operation of a treatment facility and those resulting from wet-weather flows. The impact of imposing the additional solids from wet weather upon existing dry-weather facilities is illustrated in the following example.

Figure 82. Sludge bank in Conner Street sewer, Detroit [15]

A 2.3 m (7.5-foot) deep sludge bank resulting from in-line storage; two barrels of a three barrel sewer; each barrel, 4.8 m X 5.3 m (15.75 X 17.5 feet), contained sludge deposits extending downstream about 2,150 m (7,000 feet) and ranging from 1.5 m to 1.8 m (5 to 6 feet) in depth for the first 1,220 m (4,000 feet)

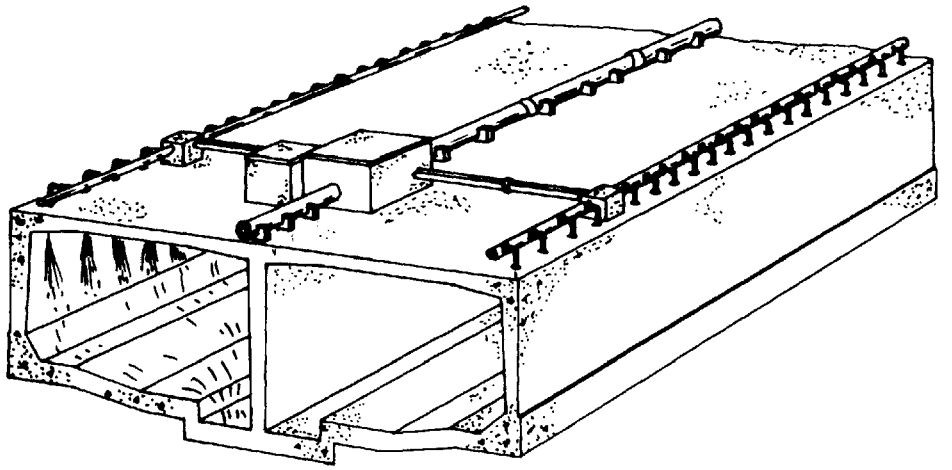

Figure 83. Flushing System, Red Run drain, Detroit [1]

The total sanitary sewage flow from a 1,000-ha (2,469-acre) area will be 141.7 l/sec (3.23 mgd), assuming 32.3 persons/ha (13.1 persons/acre) and 378 l/capita/day (100 gpcd) of flow. If the sewage contains 200 mg/l SS and 200 mg/l BOD_5 and is treated in a conventional activated sludge plant (assuming 65 percent SS and 35 percent BOD_5 removal in primary clarifiers), the sludge production will be approximately 2,470 kg/day (5,500 lb/day) of dry solids.

If a 1.27 cm/hr (0.5 in./hr) 2-hour duration rainstorm over the same area will result in 1.27 cm (0.5 inch) of runoff (assuming a runoff coefficient of 0.5), the total runoff volume will be 126,900 cu m (102.9 acre-ft). Assuming that the runoff rate is constant and all runoff occurs during the 2-hour storm duration, and that the storm flow can be characterized as having 600 mg/l SS during the first 30 minutes ("first flush" phenomenon) and 145 mg/l SS during the remaining 90 minutes, the total solids load is 32,835 kg (72,483 lb) SS, or approximately 13.3 times the average daily dry-weather flow solids production. Thus, the traditional oversight of not being concerned about storm flow solids beyond sending them to existing dry-weather flow facilities is somewhat frightening.

If the runoff is totally contained and sent to the dry-weather flow facility over 3 days (assuming no further storms occur during this period), the additional loading on

Table 85. SLUDGE PRODUCTION AND SOLIDS DISPOSAL METHODS FOR VARIOUS TREATMENT PROCESSES[a]

Treatment process	Sludge concentration, % solids	SS removal efficiency, %	Wet sludge volume cf/mil gal.	Dry solids volume, cf/mil gal.	Sludge disposal method for demonstration projects	Comments
Sedimentation	2.5-5.0[b]	40-75	260-1,000	10-20	Return to interceptor	Ultimate disposal with existing dry weather flow sludge
Dissolved air flotation	1.0-2.0	40-70	670-2,300	10-20	Return to interceptor	Ultimate disposal with existing dry weather flow sludge
Bar screens	NA[c]	--	1-4[d]	--	Landfill	For 3/4 in. to 1/2 in. bar spacing
Rotary fine screens	--	27-34	--	5-10	Return to interceptor	Ultimate disposal with existing dry weather flow sludge
Ultrafine screens and microstrainers	--	25-90	--	5-25	Return to interceptor	Ultimate disposal with existing dry weather flow sludge
Filtration	0.4-1.5[e]	50-90	1,100-7,500	10-25	Return to interceptor	Ultimate disposal with existing dry weather flow sludge
Contact stabilization	0.5-1.5	80-95	1,800-6,300[f]	20-25[f]	Return to interceptor	Ultimate disposal with existing dry weather flow sludge
Trickling filters and rotating biological contactors	3.0-10.0[g]	60-90	200-1,000	15-25	Return to interceptor	Ultimate disposal with existing dry weather flow sludge
Physical-chemical	2.0-5.0	80-100	530-1,700[h]	20-25[h]	Incineration	Ultimate disposal by landfill

a. Assuming 250 mg/l SS in the stormwater and dry solids specific gravity = 1.30.
b. Assuming continuous sludge collection.
c. NA = not available.
d. Volumes shown for screenings only, not SS.
e. Low value for unsettled backwash water and high value for settled backwash water.
f. Does not include waste biological solids produced in aeration tanks.
g. Assuming sludge recycle.
h. Does not include added chemicals.
Note: cf/mil gal. x 0.0075 = cu m/Ml
in. x 2.54 = cm

the dry-weather facility will be 10,945 kg/day (24,161 lb/day) SS. This amounts to 4.4 times the design SS loading. Such SS loadings could easily overload the grit chambers, primary clarifiers, and digesters, and could result in broken sludge collector mechanisms and in major process upsets.

The factors controlling SS removal are the total volume of wet-weather flow and the flow rate. In the case of the foregoing example, an increase in primary sedimentation capacity at existing dry-weather facilities may be required to enable them to handle the additional SS loadings from combined sewer overflows adequately or, alternatively, the

major portion of the inorganic solids may be removed at the overflow facility.

Collection

Equipment used in the collection and removal of solids from storage/sedimentation basins include rakes, chain and flights, water jets, and mechanical mixers. The sludge collection rakes, a direct adaptation from circular dry-weather flow sedimentation practice, are the most expensive, and the long periods of inactivity or nonsubmergence have resulted in bearing failures, squeegee blade warping, and other unanticipated failures.

The high-pressure water jets appear to be a favored solution incorporated in many designs. Location of the nozzles with respect to the surface to be cleaned (the force diminishes considerably with distance), easy access to the nozzles for routine maintenance, and a clean water source, are key design considerations.

Mechanical mixers have been successfully applied in the Humboldt Avenue detention facility design [2]. These strategically located devices have been used to resuspend the solids during dewatering operations, resulting in little or no long-term accumulations.

In all cases, supplemental manually directed fire hose streams have proven highly desirable.

Ultimate Disposal

By far the most common method of ultimate sludge disposal is landfilling. Several treatment processes are available for substantially reducing the sludge volume before ultimate disposal. These include heat treating, aerobic and anaerobic digestion, and incineration. All of these processes are limited to volumetric reduction of sludges containing a substantial organic content. Incineration is usually not feasible unless the sludge has a high organic content because the sludge must contribute a portion of the fuel value. Aerobic and anaerobic digestion also require high organic content sludges of a biodegradable nature because the bacteria utilize the organics as an energy source for cell synthesis. In storm sewer discharges and combined sewer overflows, the majority of solids are inorganic in nature. Thus, they have a low heating value and will degrade biologically very little.

To date, no storm flow treatment facility has been built specifically for solids handling and disposal. Generally,

as noted in Table 85, the solids removed by storm sewer discharge and combined sewer overflow treatment facilities, other than those operated as part of the dry-weather flow treatment facilities, are discharged to the interceptor for conveyance to the dry-weather plant for removal and ultimate disposal.

It is apparent that storm flow solids handling and disposal is indeed an important problem that no longer can be ignored. The solution of this problem will be different for each project, but each one will require careful storm flow quantity and quality characterization studies. Toward this end, the EPA has recently awarded a contract to study the handling and disposal of sludges arising from combined sewer overflow treatment [10]. An attempt is to be made to define the amounts, constitution, and composition of the sludges as a function of: (1) the nature of the combined sewer overflows from which they are derived, and (2) the treatment processes to which they are subjected. It is hoped that this identification endeavor will provide the background data necessary for the selection of appropriate solids handling and disposal systems for various treatment processes. The resulting recommendations for solids treatment and disposal methods should be a useful reference for designers of complete combined sewer overflow treatment and control systems in the future.

Part V

REFERENCES, GLOSSARY, AND CONVERSION FACTORS

Section XVI

REFERENCES

Cited References

Section III

1. A Letter Opinion. State of Maryland, Attorney General, Annapolis, Md. April 6, 1971.

2. Combined Sewer Overflow Abatement Alternatives: Washington, D C. Roy F. Weston, Inc. 11024 EXF. Environmental Protection Agency. August 1970.

3. Comptroller General of the United States. Need to Control Discharges From Sewers Carrying Both Sewage and Storm Runoff. Report to the Congress. March 28, 1973.

4. Georgia Water Quality Control Act. Georgia Code Annotated (Supplemental 1966), Ch. 17-5 and Ch. 88-26, as Amended by Public Acts of 1971 and Senate Bills 493 and 494, 1972 Legislature, Sections 2, 3, 10, 21A. 1972.

5. Illinois Water Pollution Control Rules. Illinois Pollution Control Board Rules and Regulations, Chapter 3, Parts I and IV. March 7, 1972.

6. Orange County, Florida, Subdivision Regulations. Orange County Planning Department (Ed.), Fla. October 1972.

7. Pollution Effects of Stormwater and Overflows From Combined Sewer Systems: A Preliminary Appraisal. U.S. Department of Health, Education, and Welfare. 1964.

8. Prevention and Correction of Excessive Infiltration and Inflow Into Sewer Systems: A Manual of Practice. American Public Works Association. 11022 EFF. Environmental Protection Agency. January 1971.

9. Problems of Combined Sewer Facilities and Overflows 1967. American Public Works Association. 11020--- 12/67. Environmental Protection Agency. December 1967.

10. Regulation No. R70-3. Secondary Treatment Dates, Mississippi River. Illinois Pollution Control Board. January 6, 1971.

11. Rules and Regulations, Sediment Control. State of Maryland, Department of Natural Resources, 8.05.03.01. Annapolis, Md. April 4, 1972.

12. Resolution No. 70-93, Amending Resolution No. 67-64. Special Time Schedule for the City and County of San Francisco Relative to Regulation of Discharges From Combined Sewers. California Regional Water Quality Control Board--San Francisco Bay Region. November 24, 1970.

13. Sediment Control Law. State of Maryland, Annotated Code, Chapter 245, Acts of 1970. April 22, 1970.

14. WPC Technical Policy 20-24, Design Criteria--Waste Treatment Plants and Treatment of Sewer Overflows. Illinois Environmental Protection Agency. Revised July 1971.

REFERENCES (Continued)

Section IV

1. City and County of San Francisco. Geissner, W.R., Cockburn, R.T., Coffee, H.C. Jr., Moss, F.H. Jr., and Noonan, M.E. San Francisco Master Plan for Waste Water Management: Preliminary Comprehensive Report. Department of Public Works. September 1971.

2. Flood Control Coordinating Committee. Development of a Flood and Pollution Control Plan for the Chicagoland Area: Summary of Technical Reports. Metropolitan Sanitary District of Greater Chicago, Institute of Environmental Quality, and Department of Public Works. August 1972.

3. Giessner, W. R., et al. Management of Wet Weather Flow. Presented at CWPCA Conference, San Diego. May 10, 1973.

4. Metcalf & Eddy, Inc. Reconnaissance Study of Combined Sewer Overflows and Storm Sewer Discharges. Prepared for District of Columbia. 1973.

5. Ministry of Housing and Local Government. Technical Committee on Storm Overflows and the Disposal of Storm Sewage. London, Her Majesty's Stationery Office. 1970.

6. U. S. Department of Commerce. Metropolitan Climatological Summaries: National Capital Area. July 1972.

7. U.S. Department of Commerce. Rainfall Frequency Atlas of the United States for Durations From 30 Minutes to 24 Hours and Return Periods From 1 to 100 Years. Technical Paper No. 40. May 1961.

8. Water Quality Management Planning for Urban Runoff. URS Research Company. Contract No. 68-01-1846. Draft report for Environmental Protection Agency. November 1973.

Section V

1. Bryan, E.H. Quality of Stormwater Drainage From Urban Land. Presented at the 7th American Water Resources Association Meeting, Washington, D.C. October 28, 1971.

2. Burm, R.J., Krawczyk, D.F., and Harlow, G.L. Chemical and Physical Comparison of Combined and Separate Sewer Discharges. Journal WPCF, 40, No. 1, pp 112-126. 1968.

3. Characterization and Treatment of Combined Sewer Overflows. Grant WPD-112-01-66, Engineering-Science, Inc. Environmental Protection Agency. November 1967.

4. City and County of San Francisco. Geissner, W.R., Cockburn, R.T., Coffee, H.C. Jr., Moss, F.H. Jr., and Noonan, M.E. San Francisco Master Plan for Waste Water Management: Preliminary Comprehensive Report. Department of Public Works. September 1971.

5. Combined Sewer Overflow Abatement Alternatives: Washington, D.C. Roy F. Weston, Inc. 11024 EXF. Environmental Protection Agency. August 1970.

6. Combined Sewer Overflow Abatement Plan: Des Moines, Iowa. Henningson, Durham & Richardson, Inc. 11024 FEG, Draft Report for Environmental Protection Agency. 1973.

7. Combined Sewer Overflow Seminar Papers. Seminar at Hudson-Delaware Basins Office. Edison, New Jersey, November 4-5, 1969. 11020--- 03/70. Environmental Protection Agency. March 1970.

8. Combined Sewer Overflow Study for the Hudson River Conference. Contract 68-01-0055. Interstate Sanitation Commission, New York City. Environmental Protection Agency. August 1972.

9. The Commonwealth of Massachusetts. Special Report of the Department of Public Health Relative to the Preparation of Plans and Maps for the Disposal of Sewage in the Merrimack River Valley. House No. 3733. 1964.

10. Crazed Resin Filtration of Combined Sewer Overflows. Hercules, Inc. 11020--- 10/69. Environmental Protection Agency. October 1968.

11. Dispatching System for Control of Combined Sewer Losses. Metropolitan Sewer Board, St. Paul, Minnesota. 11020 FAQ. Environmental Protection Agency. March 1971.

REFERENCES (Continued)

12. Engineering Investigation of Sewer Overflow Problem: Roanoke, Virginia. Hayes, Seay, Mattern & Mattern. 11024 DMS. Environmental Protection Agency. May 1970.

13. Environmental Impact of Highway Deicing. Edison Water Quality Laboratory. 11040 GKK. Environmental Protection Agency. June 1971.

14. FY 1972 Annual Report on the Quality of Urban Storm Runoff Entering the San Francisco Bay. The Hydrologic Engineering Center of Engineers, U.S. Army. June 1972.

15. J.B. Gilbert & Associates and Metcalf & Eddy, Inc. Evaluation San Francisco Wastewater Master Plan. Draft report. March 2, 1973.

16. Hypochlorination of Polluted Storm Water Pumpage at New Orleans. U.R. Pontius et al. 11203 FAS. Draft report for Environmental Protection Agency. March 1973.

17. Kluesener, J.W. and Lee, G.F. Nutrient Loading From a Separate Storm Sewer in Madison, Wisconsin. Bechtel Corporation and University of Wisconsin. Presented at 45th Annual Conference, Water Pollution Control Federation. Atlanta, Georgia. October 12, 1972.

18. Letter from Robert W. Agnew of Rex Chainbelt, Inc. to Richard Field of Environmental Protection Agency on CSO Data From Central States Meeting. June 19, 1972.

19. Los Angeles County Flood Control District, Memorandum on Storm Water Sampling Program from J.K. Mitchell to E.J. Zielbauer. File No. 2-19.012. August 16, 1968.

20. McKee, J.E. Loss of Sanitary Sewage Through Storm Water Overflow. Jour. Boston Soc. Civ. Engrs, 34, No. 2, p 55. 1947.

21. Metcalf & Eddy, Inc. American Sewage Practice, Vol. I: Design of Sewers, 2nd Edition. New York, McGraw-Hill Book Company. 1928.

22. Ministry of Housing and Local Government. Technical Committee on Storm Overflows and the Disposal of Storm Sewage. London, Her Majesty's Stationery Office. 1970.

23. Onondaga Lake Study. Onondaga County, Syracuse, New York. 11060 FAE. Environmental Protection Agency. April 1971.

24. Palmer, C.L. The Pollutional Effects of Storm-Water Overflows From Combined Sewers. Sewage and Industrial Wastes, 22, No. 2, pp 154-165. 1950.

25. Personal communication from K.L. Zippler, Elson T. Killam Associates, Inc. to W.G. Smith, Metcalf & Eddy, Inc., regarding 413TP - Treatment Plant, Borough of New Providence. April 26, 1973.

26. Pollutional Effects of Stormwater and Overflows From Combined Sewer Systems: A Preliminary Appraisal. U.S. Department of Health, Education, and Welfare. 1964.

27. Problems of Combined Sewer Facilities and Overflows 1967. American Public Works Association. 11020--- 12/67. Environmental Protection Agency. December 1967.

28. Schmidt, O. J. Pollution Control in Sewers. Jour. WPCF, 44: No. 7, p 1384. July 1972.

29. Sewer Bedding and Infiltration - Gulf Coast Area. Tulane University. 11022 DEI. Environmental Protection Agency. May 1972.

30. Shifrin, W.G. and Horner, W.W. Effectiveness of the Interception of Sewage-Storm Water Mixtures. Jour. WPCF, 33, No. 6, pp 650-720. 1961.

31. Storm and Combined Sewer Pollution Sources and Abatement: Atlanta, Georgia. Black, Crow and Eidsness, Inc. 11024 ELB. Environmental Protection Agency. January 1971

32. Storm Water Management Model, Vol. I: Final Report. Metcalf & Eddy, Inc., University of Florida, and Water Resources Engineers, Inc. 11024 DOC. Environmental Protection Agency. July 1971.

33. Storm Water Pollution From Urban Land Activity. Economics Systems Corporation. 11034 FKL. Environmental Protection Agency. July 1970.

34. Storm Water Problems and Control in Sanitary Sewers: Oakland and Berkeley, California. Metcalf & Eddy, Inc. 11024 EQG. Environmental Protection Agency. March 1971.

35. Stream Pollution and Abatement From Combined Sewer Overflows. Burgess and Niple, Limited. 11024 FKN. Environmental Protection Agency. November 1969.

36. Urban Runoff Characteristics--Vol. 1: Analytical Studies. University of Cincinnati. 11024 DQU. October 1972.

37. Urban Storm Runoff and Combined Sewer Overflow Pollution: Sacramento, California. Envirogenics Company. 11024 FKM. Environmental Protection Agency. December 1971.

38. Water Pollution Aspects of Street Surface Contaminants. J.D. Sartor and G.B. Boyd, Municipal Pollution Control Branch. 11034 FUJ. Environmental Protection Agency. November 1972.

39. Water Pollution Aspects of Urban Runoff. American Public Works Association. 11030 DNS 01/69. Environmental Protection Agency. January 1969.

Section VI

1. Agardy, F.J. and Kiado, M.L. Effects of Refrigerated Storage on the Characteristics of Wastes. Proceedings of the 21st Purdue Industrial Waste Conference, Purdue University, pp 226-233. May 1966.

2. Berthouex, P.M. Evaluating Economy of Scale. Journal WPCF, 44, No. 11, pp 2111-2119. 1972.

3. Combined Sewer Overflow Abatement Alternatives: Washington, D.C. Roy F. Weston, Inc. 11024 EXF. Environmental Protection Agency. August 1970.

4. Combined Sewer Overflow Abatement Plan: Des Moines, Iowa. Henningson, Durham & Richardson, Inc. 11024 FEJ. Draft report for Environmental Protection Agency. 1973.

5. Conceptual Engineering Report - Kingman Lake Project. Roy F. Weston, Inc. 11023 FIX. Environmental Protection Agency. August 1970.

6. Cost and Performance Estimates for Tertiary Wastewater Treating Processes. Robert A. Taft Water Research Center. 17090--- 06/69. Environmental Protection Agency. June 1969.

7. Ellis, W. and Johnston, C. T. A Field Method of Measuring and Recording Flow in Sewers. Public Works, 94, No. 6, pp 124-125. 1963.

8. Eshleman, P.W. and Blase, R.A. A Thermal Wave Flowmeter for Measuring Combined Sewer Flows. Office of Research and Monitoring. 11020 EYD. Environmental Protection Agency. March 1973.

9. Estimating Costs and Manpower Requirements for Conventional Wastewater Treatment Facilities. Black & Veatch. 17090 DAN. Environmental Protection Agency. October 1971.

10. A Flushing System for Combined Sewer Cleansing. FMC Corporation. 11020 DNO. Environmental Protection Agency. March 1972.

11. Giessner, W.R., et al. Management of Wet Weather Flow. Presented at CWPCA Conference, San Diego. May 10, 1973.

12. Hydrospace-Challenger, Inc. Sewer Flow Sampler. Preliminary rough draft. 1972.

13. Krenkel, P.A. (Ed.). Proceedings of the Specialty Conference on Automatic Water Quality Monitoring in Europe. Vanderbilt University. March 29-April 2, 1971.

14. Letter Progress Report. Badger Meter, Inc., to Sewerage Commission of the City of Milwaukee. 11024 FVQ. October 16, 1972.

15. Letter from W. H. Vander Heyden of Badger Meter, Inc. to John A. Lager of Metcalf & Eddy, Inc. on Badger Meter's ultrasonic flowmeters. September 25, 1973.

16. Maximizing Storage in Combined Sewer Systems. Municipality of Metropolitan Seattle. 11022 ELK. Environmental Protection Agency. December 1971.

17. McPherson, M.B. Feasibility of the Metropolitan Water Intelligence System Concept (Integrated Automatic Operational Control). American Society of Civil Engineers. December 1971.

18. Metcalf & Eddy, Inc. Reconnaissance Study of Combined Sewer Overflows and Storm Sewer Discharges. Prepared for District of Columbia. 1973.

19. Metcalf & Eddy, Inc. Wastewater Engineering: Collection, Treatment, Disposal. New York, McGraw-Hill Book Company. 1972.

20. National Pollution Discharge Elimination System Application for Permit to Discharge, Appendix A - Standard Analytical Methods (Interim). Federal Laws 71:5598-71:5603.

21. A Portable Device for Measuring Wastewater Flow in Sewers. Hittman Associates. Contract No. 14-12-909. Draft report for Environmental Protection Agency. May 1973.

22. Schontzler, J.G. Electronic Flow Measurement for Wastewater. Presented at the WWEMA Industrial Water and Pollution Conference. March 15, 1973.

23. Smith, R. Cost of Conventional and Advanced Treatment of Wastewater. Journal WPCF, 40, No. 9, pp 1546-1574. 1968.

24. Suspended Solids Monitor. American Standard, Inc. 11020 DZB. Environmental Protection Agency. August 1972.

25. System Monitoring and Remote Control. Detroit Metropolitan Water Department. 11020 FAX. Draft report for Environmental Protection Agency. November 1972.

26. Underwater Storage of Combined Sewer Overflows. Karl R. Rohrer Associates, Inc. 11022 ECV. September 1971.

27. USEPA Clean Water Fact Sheet: Storm and Combined Sewer Projects. April 1969.

28. Visit to the EPA Regional Office in Chicago, Illinois, and Four of Their On-going Projects. Memorandum for the Record, C.D. Tonkin, Metcalf & Eddy, Inc. January 29-February 6, 1973.

Section VII

1. Environmental Impact of Highway Deicing. Edison Water Quality Laboratory. 11040 GKK. Environmental Protection Agency. June 1971.

2. Everhart, R.C. New Town Planned Around Environmental Aspects. Civil Engineering-ASCE, 43, No. 9, pp 69-73. September 1973.

3. Guidelines for Erosion and Sediment Control Planning and Implementation. Maryland Department of Water Resources and Hittman Associates, Inc. 15030 FMZ. Environmental Protection Agency. August 1972.

4. Investigation of Porous Pavements for Urban Runoff Control. The Franklin Institute Research Laboratories. 11034 DUY. Environmental Protection Agency. March 1972.

5. Mammel, F.A. We are Using Salt--Smarter. Department of Public Works, Ann Arbor, Michigan, American City, LXXXVII, No. 1, pp 54-56. 1972.

6. Poertner, H.G. Better Storm Drainage Facilities at Lower Cost. Civil Engineering - ASCE, 43, No. 10, pp 67-70. October 1973.

7. Sartor, J.D. and Boyd, G.B. Water Pollution Aspects of Street Surface Contaminants. EPA-R2-72-081. Environmental Protection Agency. November 1972.

8. Sartor, J.D., Boyd, G.B., and Agardy, F.J. Water Pollution Aspects of Street Surface Contaminants. Presented at the 45th Annual Conference of the Water Pollution Control Federation. Atlanta, Georgia. October 1972.

9. Sediment Movement in an Area of Surburban Highway Construction, Scott Run Basin, Fairfax County, Virginia, 1961-64. Geological Survey Water-Supply Paper 1591-E. 1969.

10. Shaeffer, J.R. Storm Water for Fun and Profit. Water Spectrum, 2, No. 3, pp 29-34. Fall 1970.

11. Toxic Material Analysis of Street Surface Contaminants. R.E. Pitt and G. Amy. EPA-R2-73-283. Environmental Protection Agency. August 1973.

12. Water Pollution Aspects of Urban Runoff. American Public Works Association. 11030 DNS 01/69. Environmental Protection Agency. January 1969.

13. Field, R., et al. Water Pollution and Associated Effects From Street Salting. EPA-R2-73-257. Edison Water Quality Research Laboratory, Environmental Protection Agency. May 1973.

Section VIII

1. Ackers, P., et al. Storm Overflow Performance Studies Using Crude Sewage. Symposium on Storm Sewage Overflows, Institution of Civil Engineers, London. 1967.

2. Anderson, J.J. Real-Time Computer Control of Urban Runoff. ASCE J. Hyd. Div., 96, HY-1, pp 153-164. 1970.

3. Brown, J.W., and Suhre, D.T. Sewer Monitoring and Remote Control, Detroit. Presented at ASCE Annual and Environmental Meeting, Chicago, October 13-17, 1969. Preprint 1035.

4. Burm, R.J., Krawczyk, D.F., and Harlow, G.L. Chemical and Physical Comparison of Combined and Separate Sewer Discharges. Journal WPCF, 40, No. 1, pp 112-126. 1968.

5. Caster, A.D., and Stein, W.J. Pollution From Combined Sewers, Cincinnati, Ohio. Presented at ASCE National Water Resources Engineering Meeting, Memphis, January 26-30, 1970. Preprint 1090.

6. City and County of San Francisco. Geissner, W.R., Cockburn, R.T., Coffee, H.C. Jr., Moss, F.H. Jr., and Noonan, M.E. San Francisco Master Plan for Waste Water Management: Preliminary Report. Department of Public Works. September 1971.

7. Combined Sewer Overflow Abatement Alternatives: Washington, D.C. Roy F. Weston, Inc. 11024 EXF. Environmental Protection Agency. August 1970.

8. Combined Sewer Overflow Abatement Plan: Des Moines, Iowa. Henningson, Durham & Richardson, Inc. 11024 FEJ. Draft report for Environment Protection Agency. 1973.

9. Combined Sewer Overflow Seminar Papers. Seminar at Hudson-Delaware Basins Office, Edison, N.J., November 4-5, 1969. 11020--- 03/70. Environmental Protection Agency.

10. Combined Sewer Regulation and Management: A Manual of Practice. American Public Works Association. 11022 DMU. Environmental Protection Agency. July 1970.

11. Combined Sewer Regulator Overflow Facilities. American Public Works Association. 11022 DMU. Environmental Protection Agency. July 1970.

12. Combined Sewer Separation Using Pressure Sewers. American Society of Civil Engineers. 11020 EKO. Environmental Protection Agency. October 1969.

13. Control of Infiltration and Inflow into Sewer Systems. American Public Works Association. 11022 EFF. Environmental Protection Agency. December 1970.

14. Design of a Combined Sewer Fluidic Regulator. Bowles Engineering Corporation. 11020 DGZ. Environmental Protection Agency. October 1969.

15. Field, R. The Dual Functioning Swirl Combined Sewer Overflow Regulator/Concentrator. EPA-670/2-73-059. Edison Water Quality Research Laboratory, Environmental Protection Agency. September 1973.

16. Ellis, W. and Johnston, C.T. A Field Method of Measuring and Recording Flow in Sewers. Public Works, 94, No. 6, pp 124-125. 1963.

17. EPA Helps Metro Transfer Technology Into Clean Water. Technology Transfer Brochure. GPA 795-185. Environmental Protection Agency. November 1971.

REFERENCES (Continued)

18. Feasibility of a Stabilization-Retention Basin in Lake Erie at Cleveland, Ohio. Havens and Emerson. 11020--- 05/68. Environmental Protection Agency. May 1968.

19. Field, R. Combined Sewer Overflows. Civil Engineering-ASCE, pp 57-60. February 1973.

20. Flood Control Coordinating Committee. Development of a Flood and Pollution Control Plan for the Chicagoland Area: Summary of Technical Reports. Metropolitan Sanitary District of Greater Chicago, Institute of Environmental Quality, and Department of Public Works. August 1972.

21. Flow Augmenting Effects of Additives on Open Channel Flows. Columbia Researcy Corporation. EPA-R2-73-238. Environmental Protection Agency. February 1973.

22. A Flushing System for Combined Sewer Cleansing. FMC Corporation. 11020 DNO. Environmental Protection Agency. March 1972.

23. Gibbs, C.V., et al. System for Regulation of Combined Sewage Flows. ASCE San.J., 98, SA-6, pp 951-972. 1972.

24. Greeley, S.A. Marston, F.A., and Requardt, G.J. (Board of Engineers). Report to District of Columbia, Department of Sanitary Engineering, on Improvements to Sewerage System. February 28, 1957.

25. Ground Water Infiltration and Internal Sealing of Sanitary Sewers. Montgomery County Sanitary Department, Montgomery County, Ohio. 11020 DHQ. Environmental Protection Agency. June 1972.

26. Harlan, T.S. and Allman, W.B. Polyethylene Pipe Slipped Into Defective Sanitary Sewer. Civil Engineering, 43, No. 6, pp 78-81. 1973.

27. Heat Shrinkable Tubing as Sewer Pipe Joints. The Western Company. 11024 FLY. Environmental Protection Agency. June 1971.

28. Impregnation of Concrete Pipe. Southwest Research Institute. 11024 EQE. Environmental Protection Agency. June 1971.

29. Improved Sealants for Infiltration Control. The Western Company. 11020 DIH. Environmental Protection Agency. June 1969.

30. Maximizing Storage in Combined Sewer Systems. Municipality of Metropolitan Seattle. 11022 ELK. Environmental Protection Agency. December 1971.

31. Metcalf & Eddy, Inc. Reconnaissance Study of Combined Sewer Overflows and Storm Sewer Discharges. Prepared for District of Columbia. 1973.

32. Metcalf & Eddy, Inc. Wastewater Engineering: Collection, Treatment, Disposal. New York, McGraw-Hill Book Company. 1972.

33. Microstraining and Disinfection of Combined Sewer Overflows. Cochrane Division, Crane Company. 11023 EVO. Environmental Protection Agency. June 1970.

34. Oakley, H.R. Practical Design of Storm Sewage Overflows. Symposium on Storm Sewage Overflows. London, Institution of Civil Engineers. 1967.

35. Palmer, C.L. Feasibility of Combined Sewer Systems. Journal WPCF, 35, No. 2, pp 162-167. 1963.

36. Personal Communication from Dallas Water Utilities to W.G. Smith, Metcalf & Eddy, Inc., regarding site plan and break-down of costs for the Bachman Polymer Injection Station. March 9, 1973.

37. Personal communication from M.L. Robins of Metropolitan Sewer Board, St. Paul, Minnesota, to J.A. Lager, Metcalf & Eddy, Inc., regarding Minneapolis-St. Paul's combined sewer overflow control program. February 2, 1973.

38. Personal Communication from Paul L. Brunner, Fort Wayne City Utilities, to W.G. Smith, Metcalf & Eddy, Inc. regarding cost data for stormwater demonstration. Grant EPA-11020 GYU. May 8, 1973.

39. Personal communication from R. Staufer of Bowles Engineering Corporation to M.K. Mullis, Metcalf & Eddy, Inc., regarding costs of fluidic regulators. October 6, 1972.

40. Polymers for Sewer Flow Control. The Western Company. 11020 DIG. Environmental Protection Agency. August 1969.

41. Prevention and Correction of Excessive Infiltration and Inflow into Sewer Systems: A Manual of Practice. American Public Works Association. 11022 EFF. Environmental Protection Agency. January 1971.

42. Problems of Combined Sewer Facilities and Overflows 1967. American Public Works Association. 11020--- 12/67. Environmental Protection Agency. December 1967.

43. Proposed Combined Sewer Control by Electrode Potential. Merrimack College. 11024 DOK. Environmental Protection Agency. February 1970.

44. Prus-Chacinski, T.M. and Wielogorski, J.W. Secondary Motions Applied to Storm Sewage Overflows, pp 71-80.

45. Robins, M.L. Personal communication to W.G. Smith, Metcalf & Eddy, Inc., regarding Fabridams costs. March 9, 1973.

46. Sewer Bedding and Infiltration - Gulf Coast Area. Tulane University. 11022 DEI. Environmental Protection Agency. May 1972.

47. Smisson, B. Design, Construction and Performance of Vortex Overflows. Symposium on Storm Sewage Overflows. London, Institution of Civil Engineers. 1967.

48. Storage and Treatment of Combined Sewer Overflows. Clarence C. Oster, Lake Superior Basin Office-EPA. 11023 FIY. Chippewa Falls, Wisc. Environmental Protection Agency. October 1972.

49. Stream Pollution and Abatement From Combined Sewer Overflows. Burgess and Niple, Limited. 11024 FKN. Environmental Protection Agency. November 1969.

50. The Swirl Concentrator as a Combined Sewer Overflow Regulator Facility. American Public Works Association. EPA-R2-72-008. Environmental Protection Agency. September 1972.

51. Underwater Storage of Combined Sewer Overflows. Karl R. Rohrer Associates, Inc., 11022 ECV. Environmental Protection Agency. September 1971.

Section IX

1. Brown, J.W., and Suhre, D. Sewer Monitoring and Remote Control - Detroit. Presented at ASCE Annual and Environmental Meeting, Chicago. October 13-17, 1969. Preprint 1035.

2. City of Milwaukee. Humboldt Avenue Pollution Abatement Demonstration Project - General Project Description. December 1971. (Includes two drawings, 158a & 158b).

3. City of Milwaukee, Wisconsin. Humboldt Avenue Pollution Abatement Demonstration Project. Consoer, Townsend & Associates. 11020 FAU. Environmental Protection Agency. (Draft of Sections III-VII). May 1973.

4. Control of Pollution by Underwater Storage. Underwater Storage, Inc. and Silver, Schwartz, Ltd. 11020 DWF. Environmental Protection Agency. December 1969.

5. Deep Tunnels in Hard Rock. Proceedings of An Engineering Institute, presented by the University of Wisconsin-Milwaukee, November 9-10, 1970. 11020--- 02/71. Environmental Protection Agency.

6. Devenis, K. Cottage Farm Stormwater Treatment Station. Public Works, November 1971.

7. Dispatching System for Control of Combined Sewer Losses. St. Paul, Minnesota, Metropolitan Sewer Board. 11020 FAQ. Environmental Protection Agency, March 1971.

8. Field, R. and Struzeski, J. Management and Control of Combined Sewer Overflows. Presented at 36th Annual Sewage Works Operators' Conference. Springfield, Ill., April 21, 1971. In WPCF Journal, 44, No. 7, pp 1393-1415.

9. Flood Control Coordinating Committee. Development of a Flood and Pollution Control Plan for the Chicagoland Area: Summary of Technical Reports. Metropolitan Sanitary District of Greater Chicago, Institute of Environmental Quality, and Department of Public Works. August 1972.

10. Foerster, R.E. The Spring Creek Combined Sewer Overflow Project. Greeley and Hansen, Engineers. Presented at the New York State Water Pollution Control Association Annual Meeting, January 28, 1972.

11. Hydraulics of Long Vertical Conduits and Associated Cavitation. St. Anthony Falls Hydraulic Laboratory. 11034 FLU. Environmental Protection Agency. June 1971.

12. Letter from Andrew Warren to Tony Tafuri on bid cost of Spring Creek Project. September 1972.

13. Letter from D.R. Zwickey to Commissioner of Public Works, City of Milwaukee on bidder costs of Humboldt Avenue Pollution Abatement Demonstration Project. July 10, 1969.

14. Maximizing Storage in Combined Sewer Systems. Municipality of Metropolitan Seattle. 11022 ELK. Environmental Protection Agency. December 1971.

15. Metropolitan Water Intelligence Systems Completion Report-Phase 1. Colorado State University, Department of Civil Engineering. U.S. Department of the Interior, Office of Water Resources Research, Grant No. 14-31-0001-3410. June 1972.

16. Poertner, H.G. Better Storm Drainage Facilities at Lower Cost. Civil Engineering-ASCE, 43, No. 10, pp. 67-70. October 1973.

17. Rohrer, K.R. Assoc, Inc. Demonstration of Void Space Storage with Treatment and Flow Regulation. EPA Project 11020 DXH.

18. Storage and Treatment of Combined Sewer Overflows. C. C. Oster. Lake Superior Basin Office-EPA, Chippewa Falls, Wis. Environmental Protection Agency. October 1972.

19. Underwater Storage of Combined Sewer Overflows. Karl R. Rohrer Associates, Inc. 11022 ECV. Environmental Protection Agency. September 1971.

Section X

1. American Petroleum Institute. Manual on Disposal of Refinery Wastes, Volume on Liquid Wastes, Chapter 5, Oil-Water Separator Process Design. 1969.

2. American Petroleum Institute. Manual on Disposal of Refinery Wastes, Volume and Liquid Wastes, Chapter 9, Filtration, Flocculation, Flotation. 1969.

3. Babbit, H.E. Sewerage and Sewage Treatment, 8th Ed. New York, John Wiley & Sons. 1958.

4. Backman Stormwater Treatment Plant: Monthly Report. City of Dallas, Texas. 11020 FAW. Environmental Protection Agency. January 1973.

5. Bachman Stormwater Treatment Plant: Monthly Report. City of Dallas, Texas. 11020 FAW. Environmental Protection Agency. November 1972.

6. Bodien, D.G. and Stenberg, R.L. Microscreening Effectively Polishes Activated Sludge Plant Effluent. Water & Wastes Engineering, 3, No. 9, pp 74-77. 1969.

7. Cohen, J.M. Suspended and Colloidal Solids Removal. PPB 1703, EPA Internal Communication. June 1970.

8. Combined Sewer Overflow Seminar Papers. Edison Water Quality Research Laboratory. EPA 670/2-73-077. Environmental Protection Agency. September 1973.

9. Conceptual Engineering Report - Kingman Lake Project. Roy F. Weston, Inc. 11023 FIX. Environmental Protection Agency. August 1970.

REFERENCES (Continued)

10. Crazed Resin Filtration of Combined Sewer Overflows. Hercules, Inc. 11020--- 10/69. Environmental Protection Agency. October 1968.

11. Demonstration of Rotary Screening for Combined Sewer Overflows. City of Portland, Oregon. 11023 FDD. Environmental Protection Agency. July 1971.

12. Development of a Flocculation-Flotation Concept for Solids Separation in Storm Sewer Systems. Hercules, Inc. Contract No. 14-120855. Environmental Protection Agency. January 1972.

13. Diaper, E.W.J. Microstraining and Ozonation of Sewage Effluents. Presented at the 41st Annual Conference of the Water Pollution Control Federation, Chicago, Illinois. September 1968.

14. Diaper, E.W.J. and Glover, G.E. Microstraining of Combined Sewer Overflows. Journal WPCF, 43, No. 10, pp 2101-2113. 1971.

15. Dissolved Air Flotation: Appendix E--Costs for Dissolved Air Flotation Facilities. Engineering-Science, Inc. Environmental Protection Agency. July 1971.

16. Dissolved Air Flotation: Appendix G--Performance Evaluation of Baker Street Facility With Raw Sewage. Engineering-Science, Inc. Environmental Protection Agency. July 1971.

17. Dissolved-Air Flotation Treatment of Combined Sewer Overflows. Rhodes Technology Corporation. Contract No. 14-12-11. Environmental Protection Agency. January 1970.

18. Estimating Costs and Manpower Requirements for Conventional Wastewater Treatment Facilities. Black & Veatch. 17090 DAN. Environmental Protection Agency. October 1971.

19. Evaluation of Storm Standby Tanks. Dodson, Kinney and Lindblom. 11020 FAL. Environmental Protection Agency. March 1971.

20. Fuller, G.W. & McClintock, J.R. Solving Sewage Problems, 1st Ed. New York, McGraw-Hill Book Company. 1926.

21. Ginaven, M.E. A New Low Cost Device for Solids Recovery from Effluents. Cost Engineering, 16, No. 4, pp 4-10. 1971.

22. High Rate Filtration of Combined Sewer Overflows. Hydrotechnic Corporation. 11023 EYI. Environmental Protection Agency. April 1972.

23. Hulme. All You See is the Stream. The American City, pp 77. 1970.

24. Lee, J.A. et al. Filtering Combined Sewer Overflows. Journal WPCF, 44, No. 7, pp 1317-1333. 1972.

25. Metcalf & Eddy, Inc. Wastewater Engineering: Collection, Treatment, Disposal. New York, McGraw-Hill Book Company. 1972.

26. Microstraining and Disinfection of Combined Sewer Overflows. Cochrane Division, Crane Company. 11023 EVO. Environmental Protection Agency. June 1970.

27. Microstraining and Disinfection of Combined Sewer Overflows-Phase II. Cochrane Division, Crane Company. 11023 FWT. Environmental Protection Agency. July 1972.

28. Personal Communication from Paul L. Brunner, Fort Wayne City Utilities, to W.G. Smith, Metcalf & Eddy, Inc., regarding cost data for stormwater demonstration. Grant EPA-11020 GYU. May 8, 1973.

29. Personal phone communication regarding corrosion resistance of microstraining fabric with Jack B. Pratt, Western Manager, Cochrane Division of Crane Company. December 6, 1972.

30. Personal phone communication regarding design equations for microstrainers with E.W.T. Diaper and G.E. Glover of Cochrane Division of Crane Company. February 21, 1973.

31. Personal phone communication regarding operating characteristics of microstrainers with Jack Pratt, Western Manager, Cochrane Division of Crane Company. February 20, 1973.

REFERENCES (Continued)

32. Planning Drawings for the Wastewater Collection System and Treatment Facility at Mount Clemens. Spalding, DeDecker & Associates, Inc. January 1973.

33. Post-Construction Evaluation Plan, Mount Clemens, Michigan. Spalding, DeDecker & Associates, Inc., 1973.

34. Rapid-Flow Filter for Sewer Overflows. The Rand Development Corporation. Contract No. WA 67-2. Environmental Protection Agency. August 1969.

35. Reclamation of Water. Water Pollution Research, pp 120-123. 1966.

36. Rock Tunnel Summaries. Data for Chicago's Deep Tunnel. September 1970.

37. Roesler, J.F. Preliminary Design of Surface Filtration Units (Microscreening). Environmental Protection Agency. June 1969.

38. Rotary Vibratory Fine Screening of Combined Sewer Overflows. Cornell, Howland, Hayes and Merryfield. 11023 FDD. Environmental Protection Agency. March 1970.

39. Screening/Dissolved-Air Flotation Treatment of Combined Sewer Overflows. Envirex, Inc., for Combined Wastewater Systems Training Course, sponsored by EPA. November 1972-February 1973.

40. Screening/Flotation Treatment of Combined Sewer Overflows. Rex Chainbelt, Inc. 11020 FDC. Environment Protection Agency. January 1972.

41. Strainer/Filter Treatment of Combined Sewer Overflows. Fram Corporation. 11020 EXV. Environmental Protection Agency. July 1969.

42. Ultrasonic Filtration of Combined Sewer Overflows. American Process Equipment Corporation. 11023 DZF. Environmental Protection Agency. June 1970.

43. Visit to the EPA Regional Office in Chicago, Illinois, and Four of Their On-Going Projects. Memorandum for the Record, D.C. Tonkin, Metcalf & Eddy, Inc. January 29-February 6, 1973.

Section XI

1. An Evaluation of Three Combined Sewer Overflow Treatment Alternatives. Clark, Dietz and Associates-Engineers, Inc. 11020 FAM. Draft report for Environmental Protection Agency. October 1972.

2. Antonie, R.L. Response of the Bio-Disc Process to Fluctuating Wastewater Flows. Presented at the 25th Purdue Industrial Waste Conference. May 5-7, 1970.

3. Antonie, R.L. and Van Aacken, K. Rotating Discs Fulfill Dual Wastewater Role. Water and Wastes Engineering, 8, No. 1, pp 37-38. January 1971.

4. Autotrol Corporation. Bio-Surf Design Manual. 1972.

5. Canter, L.W., Englande, A.J., Jr., and Mauldin, A.F., Jr. Loading Rates on Waste Stabilization Ponds. ASCE San. Eng., 95, No. SA 6, pp 1117-1129. 1969.

6. Clark, J.W. and Viessman, W., Jr. Water Supply and Pollution Control. Scranton, International Textbook Company. 1965.

7. Combined Sewer Overflow Treatment by the Rotating Biological Contactor Process. Autotrol Corporation. Environmental Protection Agency. September 1972.

8. Combined Wastewater Collection and Treatment Facility, Mount Clemens, Michigan. V.W. Mahida. Spalding, DeDecker & Associates, Inc. Presented at 4th Annual Conference, Water Pollution Control Federation. San Francisco, California. October 3-8, 1971.

9. Design, Construction, Operation and Evaluation of a Demonstration Waste Treatment Device Termed the "Rotating Biological Contactor". Allis-Chalmers. Contract No. 14-12-24. Environmental Protection Agency. August 1969.

REFERENCES (Continued)

10. Diaper, E.W.J. Oxidation Pond Effluent Improvement. Presented at the 49th Texas Water and Sewage Works Association's Short School. College Station, Texas. March 1967.

11. Dinges, R. and Rust, A. The Role of Daphnia in Wastewater Oxidation Ponds. Public Works, 103, No. 10, pp 89-91, 128. October 1972.

12. Gloyna, E.F. Basis for Stabilization Ponds Designs. Water Quality Improvement: Water Resources Symposium No. 1, pp 397-408. Austin, University of Texas Press. 1968.

13. Gloyna, E.F. Waste Stabilization Ponds. Geneva, World Health Organization. 1971.

14. Lawrence, A.W. and McCarty, P.L. Unified Basis for Biological Treatment Design and Operation. ASCE San. Eng., 96, No. SA 3, pp 757-778. 1970.

15. McCarty, P.L. Discussion on paper by Siddiqi, R.H. et al. on "The Role of Enzymes in the Contact Stabilization Process." Advances in Water Pollution Research, Vol. 2, pp 372-376. Water Pollution Control Federation. 1967.

16. McGauhey, P.H. Engineering Management of Water Quality. New York, McGraw-Hill Book Company. 1968.

17. Metcalf & Eddy, Inc. Wastewater Engineering: Collection, Treatment, Disposal. New York, McGraw-Hill Book Company. 1972.

18. Oswald, W.J. Advances in Anaerobic Pond Systems Design. Water Quality Improvement: Water Resources Symposium No. 1, pp 409-426. Austin, University of Texas Press. 1968.

19. Personal communication from Rexnord, Inc. to Kenosha Water Utility regarding EPA Grant No. 11023 EKC: Rexnord Project No. FG 40009. Rexnord Progress Report No. 43. April 13, 1973.

20. Personal communication from K.L. Zippler, Elson T. Killam Associates, Inc. to W.G. Smith, Metcalf & Eddy, Inc., regarding 413TP -- Treatment Plant, Borough of New Providence. April 26, 1973.

21. Post-Construction Evaluation Plan, Mount Clemens, Michigan. Spalding, DeDecker & Associates, Inc., 1973.

22. Retention Basin Control of Combined Sewer Overflows. Springfield Sanitary District, Springfield, Illinois. 11023--- 08/70. Environmental Protection Agency. August 1970.

23. Rex Chainbelt, Inc. Kenosha Biosorption Project. January 1973.

24. Siddiqi, R.H. et al. The Role of Enzymes in the Contact Stabilization Process. Advances in Water Pollution Research, Vol. 2, pp 353-366. Water Pollution Control Federation. 1967.

25. Thirumurthi, D. Design Principles of Waste Stabilization Ponds. ASCE San. Eng., 95, No. SA 2, pp 311-330. 1969.

26. Torpey, W.N. et al. Rotating Discs with Biological Growths Prepare Wastewater for Disposal or Reuse. Journal WPCF, 43, No. 11, pp 2181-2188. November 1971.

27. Visit to the EPA Regional Office in Chacago, Illinois, and Four of Their On-Going Projects. Memorandum for the Record, C.D. Tonkin, Metcalf & Eddy, Inc. January 29-February 6, 1973.

28. Walters, C.F. et al. Microbial Substrate Storage in Activated Sludge. ASCE San. Eng., 94, No. SA 2, pp 257-269. 1968.

29. Waste Treatment Lagoons--State of the Art. Missouri Basin Engineering Health Council. 17090 EHX. Environmental Protection Agency. July 1971.

REFERENCES (Continued)

Section XII

1. Anooshian, A.A., Jenks, J., and Agardy, F.J. Fluidized Bed Sludge Incineration System-Review and Analysis, Phase 1. Estero Municipal Improvement District, Foster City, California. October 1970.

2. Bishop, D.F. et al. Physical-Chemical Treatment of Municipal Wastewater. Journal WPCF, 44, No. 3, pp 361-371. 1972.

3. City and County of San Francisco. Geissner, W.R., Cockburn, R.T., Coffee, H.C. Jr., Moss, F.H. Jr., and Noonan, M.E. San Francisco Master Plan for Waste Water Management: Preliminary Report. Department of Public Works. September 1971.

4. Cohen, J.M. Dissolved Refractory Organics. PPB 1702, EPA Internal Communication. June 1970.

5. Cohen, J.M. Suspended and Colloidal Solids Removal. PPB 1703, EPA Internal Communication. June 1970.

6. Conceptual Engineering Report - Kingman Lake Project. Roy F. Weston, Inc. 11023 FIX. Environmental Protection Agency. August 1970.

7. Conley, W.R. and Hsiung, K. Design and Application of Multimedia Filters. Journal AWWA, 61, p 97. February 1969.

8. Cost and Performance Estimates for Tertiary Wastewater Treating Processes. Robert A. Taft Water Research Center. 17090--- 06/69. Environmental Protection Agency. June 1969.

9. Culp, R.L. and Culp, G.L. Advanced Wastewater Treatment. New York, Van Nostrand-Reinhold Company. 1971

10. Culp, G.L. Chemical Treatment of Raw Sewage-2. Water and Wastes Engineering, 4, No. 10, pp 54-57. 1967.

11. Estimating Costs and Manpower Requirements for Conventional Wastewater Treatment Facilities. Black & Veatch. 17090 DAN. Environmental Protection Agency. October 1971.

12. Granular Carbon Treatment of Raw Sewage. FMC Corporation. 17050 DAL. Environmental Protection Agency. May 1970.

13. Graeser, H.J. Dallas Water Utilities. Journal AWWA, 64, No. 10, pp No. 638-641. 1972.

14. Kugelman, I.J. and Cohen, J.M. Chemical-Physical Processes. Presented at the Advanced Waste Treatment and Water Reuse Symposium, Cleveland, Ohio. March 1971.

15. Lager, J.A. and Smith, W.G. Memorandum for the Record--Dallas Inspection Trip. Metcalf & Eddy, Inc. March 16, 1973.

16. Metcalf & Eddy, Inc. Report to District of Columbia, Department of Sanitary Engineering, Washington, D.C., on Comparative Evaluation of Advanced Waste Treatment Systems. June 17, 1970.

17. Metcalf & Eddy, Inc. Report of District of Columbia, Department of Sanitary Engineering, Washington, D.C., on Comparative Evaluations of Secondary and Advanced Wastewater Treatment for the Water Pollution Control Plant. July 12, 1971.

18. Metcalf & Eddy, Inc. Wastewater Engineering: Collection, Treatment, Disposal. New York, McGraw-Hill Book Company. 1972.

19. Parkhurst, J.D. et al. Pomona Activated Carbon Pilot Plant. Journal WPCF, 39, No. 10, Part 2, pp R70-R81. 1967.

20. Process Design Manual for Suspended Solids Removal. Burns and Roe, Inc. 17030 GNO. Environmental Protection Agency Technology Transfer. October 1971.

21. Process Design Manual for Carbon Adsorption. Swindell-Dressler Co. 17020 GNR. Environmental Protection Agency. October 1971.

22. Physical-Chemical Treatment of Combined and Municipal Sewage. Battelle Northwest Laboratories. EPA-R2-73-149. February 1973.

23. Rizzo, J.L. and Schade, R.E. Secondary Treatment with Granular Activated Carbon. Water & Sewage Works, 116, No. 8, pp 307-312. 1969.

24. Smith, C.E. Recovery of Coagulant, Nitrogen Removal and Carbon Regeneration in Waste Reclamation. Final Report, FWPCA Grant WPD-85. June 1967.

25. Tchobanoglous, G. Filtration Techniques in Tertiary Treatment. Journal WPCF, 42, No. 4, pp 604-623. 1970.

26. The Development of a Fluidized-Bed Technique for the Regeneration of Powdered Activated Carbon. Battelle Memorial Institute. 17020 FBD. Environmental Protection Agency. March 1970.

Section XIII

1. Benarde, M.A., et al. Kinetics and Mechanism of Bacterial Disinfection by Chlorine Dioxide. Applied Microbiology, 15, No. 2, p 257. 1967.

2. Camp, T.R. and Stein, P.C. Velocity Gradients and Internal Work in Fluid Motion. Journal Boston Society of Civil Engineers, 30, No. 219. 1943.

3. Collins, H.F., Selleck, R.E., and White, G.C. Problems in Obtaining Adequate Sewage Disinfection. Proceedings of Sanitary Engineering Division, Am. Soc. of Civil Engineers. October 1971.

4. Field, R. and Struzeski, J. Management and Control of Combined Sewer Overflows. Presented at 36th Annual Sewage Works Operators' Conference, Springfield, Ill., April 21, 1971. In Journal WPCF, 44, No. 7, pp 1393-1415.

5. Hypochlorination of Polluted Storm Water Pumpage at New Orleans. Region VI, USEPA. 11023 FAS. Environmental Protection Agency. March 1973.

6. Hypochlorite Generator for Treatment of Combined Sewer Overflows. Ionics, Inc. 11023 DHE. Environmental Protection AGency. March 1972.

7. Microstraining and Disinfection of Combined Sewer Overflows. Cochrane Division, Crane Company. 11023 EVO. Environmental Protection Agency. June 1970.

8. Microstraining and Disinfection of Combined Sewer Overflows--Phase II. Cochrane Division, Crane Company. 11023 FWT. Environmental Protection Agency. July 1972.

9. Ozone Treatment of Secondary Effluents From Waste-Water Treatment Plants. Air Reduction Co., Inc. 17020 (14-12-114). Environmental Protection Agency. April 1969.

10. McKee, J.E., et al. Chemical and Colicical Effects of Halogens in Sewage. Journal WPCF, 32, No. 8, pp 795-819.

11. Metcalf & Eddy, Inc. Wastewater Engineering: Collection, Treatment, Disposal. New York, McGraw-Hill Book Company. 1972.

12. O'Brien & Gere, Inc. Contract No. S802400. Draft of report for Environmental Protection Agency concerning bench-scale disinfection tests at Syracuse, New York. 1973.

13. Personal Communication from D. Schwinn, Metcalf & Eddy, Inc., Boston, on disinfection methods investigated for Saginaw, Michigan storm water. 1971.

14. Screening/Flotation Treatment of Combined Sewer Overflows. Rex Chainbelt, Inc. 11020 FDC. Environmental Protection Agency. January 1972.

15. Spelman, P.T. Possible Alternatives to Chlorine Disinfection. Presented at 45th Annual Conference of WPCF, Atlanta. October 8-13, 1972.

16. Steffensen, S.W. and Nash, N. Hypochlorination of Wastewater Effluents in New York City. Presented at Joint Spring Meeting of the New York and New England Water Pollution Control Associations, Monticello, N.Y. June 15, 1966.

REFERENCES (Continued)

Section XIV

1. Battelle Memorial Institute. Evaluation of Mathematical Models for Engineering Assessment, Control, Planning, and Design of Storm and Combined Sewerage Systems. Project No. CI-73-0070. Environmental Protection Agency.

2. Battelle Pacific Northwest Laboratories. A Mathematical Model for Optimum Design and Control of Metropolitan Wastewater Management Systems. April 1973.

3. City and County of San Francisco. Geissner, W.R., Cockburn, R.I., Coffee, H.G. Jr., Moss, F.H., Jr., and Noonan, M.E. San Francisco Master Plan for Waste Water Management: Preliminary Comprehensive Report. Department of Public Works. September 1971.

4. Combined Sewer Overflow Abatement Alternatives: Washington, D.C. Roy F. Weston, Inc. 11024 EXF. Environmental Protection Agency. August 1970.

5. Conceptual Engineering Report - Kingman Lake Project. Roy F. Weston, Inc. 11023 FIX. Environmental Protection Agency. August 1970.

6. Crawford, N.H., and Linsley, R.K. Digital Simulation in Hydrology: Stanford Watershed Model IV. Stanford University, Dept. of Civil Engineering Technology Report 39. 1966.

7. Dispatching System for Control of Combined Sewer Losses. Metropolitan Sewer Board, St. Paul, Minnesota. 11020 FAQ. Environmental Protection Agency. March 1971.

8. Evaluation San Francisco Wastewater Master Plan. J. B. Gilbert & Associates. Sacramento, California. May 1973.

9. Flood Control Coordinating Committee. Development of a Flood and Pollution Control Plan for the Chicagoland Area: Summary of Technical Reports. Metropolitan Sanitary District of Greater Chicago, Institute of Environmental Quality, and Department of Public Works. August 1972.

10. Giessner, W.R., et al. Management of Wet Weather Flow. Presented at CWPCA Conference, San Diego. May 10, 1973.

11. Horsefield, D.R. The Deep Tunnel Plan for the Boston Area. Journal of the Boston Society of Civil Engineers, 55, No. 4. October 1968.

12. Improvements to the Boston Main Drainage System. Camp, Dresser, & McKee. Report to the City of Boston. September 1967.

13. Lager, J.A. and Field, R. Counter Measures for Pollution From Overflows -- The State of the Art. Presented at Water Pollution Control Federation 46th Annual Conference. Cleveland, Ohio. September 30-October 5, 1973.

14. Maximizing Storage in Combined Sewer Systems. Municipality of Metropolitan Seattle. 11022 ELK. Environmental Protection Agency. December 1971.

15. Metcalf & Eddy, Inc. Reconnaissance Study of Combined Sewer Overflows and Storm Sewer Discharges. Prepared for District of Columbia. 1973.

16. Paved Area Runoff. Illinois State Water Survey. 11030 FLN. Environmental Protection Agency. July 1972.

17. Pianno, F.R., Anderson, D.J., and Derbin, S. The Use of Mathematical Modeling to Evaluate Sewer Design and Operation. City of Cleveland exhibit handout, WPCF 46th Annual Conference. Cleveland, Ohio. September 30-October 5, 1973.

18. Ritter, F.G., and Warg, C. Upgrading City Sewer Installations. Engineering Digest. April 1971.

19. Storm Water Management Model, Vol. I, Final Report. Metcalf & Eddy, Inc., University of Florida, and Water Resources Engineers, Inc. 11024 DOC. Environmental Protection Agency. July 1971.

20. Storm Water Management Model, Vol. II, Verification and Testing. Metcalf & Eddy, Inc., University of Florida, and Water Resources Engineers, Inc. 11024 DOC. Environmental Protection Agency. August 1971.

21. Storm Water Management Model, Vol. III, User's Manual. Metcalf & Eddy, Inc., University of Florida, and Water Resources Engineers, Inc. 11024 DOC. Environmental Protection Agency. September 1971.

22. Storm Water Management Model, Vol. IV, Program Listing. Metcalf & Eddy, Inc., University of Florida, and Water Resources Engineers, Inc. 11024 DOC. Environmental Protection Agency. October 1971.

23. Terstriep, M.L. and Stall, J,B. Urban Runoff by the Road Research Laboratory Method. ASCE Hydraulic Division, 95, No. HY 6, pp 1809-1934. November 1969.

Section XV

1. Biehl, T.G. and Waring, M.D. In-Line Structure Stores and Treats Combined Overflow. Civil Engineering -- ASCE. September 1972.

2. City of Milwaukee, Wisconsin, Humboldt Avenue Pollution Abatement Demonstration Project, Sections III-VII. Consoer, Townsend & Associates. 11020 FAU. Draft report for Environmental Protection Agency. May 1973.

3. Combined Sewer Overflow Abatement Alternatives: Washington, D.C. Roy F. Weston, Inc. 11024 EXF. Environmental Protection Agency. August 1970.

4. Combined Sewer Regulator Overflow Facilities. American Public Works Association. 11022 DMU. Environmental Protection Agency. July 1970.

5. Combined Sewer Overflow Study for the Hudson River Conference. EPA-R2-73-152, report by Environmental Protection Agency. January 1973.

6. Combined Sewer Regulation and Management: A Manual of Practice. American Public Works Association. 11022 DMU. Environmental Protection Agency. July 1970.

7. Demonstrate Feasibility of the Use of Ultrasonic Filtration In Treating the Overflows From Combined and/or Storm Sewers. Acoustica Associates, Inc. 11020--- 09/67. Environmental Protection Agency. September 1967.

8. Dispatching System for Control of Combined Sewer Losses. Metropolitan Sewer Board, St. Paul, Minnesota. 11020 FAQ. Environmental Protection Agency. March 1971.

9. Dissolved Air Flotation: Appendix G--Performance Evaluation of Baker Street Facility With Raw Sewage. Engineering-Science, Inc. Environmental Protection Agency. July 1971.

10. Handling and Disposal of Sludges Arising From Combined Sewer Overflow Treatment. Envirex, Inc. EPA No. 800604. Environmental Protection Agency.

11. Lager, J.A., and Smith, W.G. Memorandum for the Record--Dallas Inspection Trip. Metcalf & Eddy, Inc. March 16, 1973.

12. Manual of Instruction for Sewage Treatment Plant Operators. New York State Department of Health, Health Education Service, Albany, New York. No date.

13. Mahida, V.U. Combined Wastewater Collection and Treatment Facility, Mount Clemens, Michigan. Spalding, DeDecker & Associates, Inc. Presented at 44th Annual Conference, Water Pollution Control Federation, San Francisco, California. October 3-8, 1971.

14. Maximizing Storage in Combined Sewer Systems. Municipality of Metropolitan Seattle. 11022 ELK. Environmental Protection Agency. December 1971.

15. System Monitoring and Remote Control. Detroit Metro Water Department. 11020 FAX. Draft report for Environmental Protection Agency. November 1972.

REFERENCES (Continued)

Uncited References

Abstracts

1. Storm Water Runoff from Urban Areas: Selected Abstracts of Related Topics. Robert A. Taft Sanitary Engineering Center. Environmental Protection Agency. April 1966.

2. Selected Urban Storm Water Runoff Abstracts. The Franklin Institute Research Laboratories. 11020 DES---06/69. Environmental Protection Agency. June 1969.

3. Selected Urban Storm Water Runoff Abstracts. The Franklin Institute Research Laboratories. Contract No. 14-12-467. Environmental Protection Agency. January 1969.

4. Selected Urban Storm Water Runoff Abstracts: July 1968-June 1970. The Franklin Institute Research Laboratories. 11024 EJC. Environmental Protection Agency. July 1970.

5. Selected Urban Storm Water Runoff Abstracts: First Quarterly Issue. The Franklin Institute Research Laboratories. 11024 EJC. Environmental Protection Agency. October 1970.

6. Selected Urban Storm Water Runoff Abstracts: Second Quarterly Issue. The Franklin Institute Research Laboratories. 11024 EJC. Environmental Protection Agency. January 1971.

7. Selected Urban Storm Water Runoff Abstracts: Third Quarterly Issue. The Franklin Institute Research Laboratories. 11024 FJE. Environmental Protection Agency. April 1971.

8. Selected Urban Storm Water Runoff Abstracts: June 1970-June 1971. The Franklin Institute Research Laboratories. 11024 FJE. Environmental Protection Agency. July 1971.

9. Selected Urban Storm Water Runoff Abstracts: July 1971-June 1972. The Franklin Institute Research Laboratories. 11020 HMM. Environmental Protection Agency. September 1972.

10. Selected Urban Storm Water Runoff Abstracts: July 1971-June 1972. The Franklin Institute Research Laboratories. Environmental Protection Agency Municipal Technology Branch. 11020 HMM. Environmental Protection Agency. December 1972.

11. Storm and Combined Sewer Pollution Control Program: Progress Report. Edison, New Jersey, Water Quality Laboratory. Environmental Protection Agency. September 1970.

12. Storm and Combined Sewer Pollution Control Program Reports: Research, Development, and Demonstration Grant, Contract, and In-House Project Reports. Edison, New Jersey, Water Quality Laboratory. Environmental Protection Agency. June 1972.

13. Storm and Combined Sewer Pollution Control Program Reports: Research, Development, and Demonstration Grant, Contract, and In-House Project Reports. Edison, New Jersey, Water Quality Laboratory. Environmental Protection Agency. January 1972.

14. Storm and Combined Sewer Demonstration Projects. Environmental Protection Agency. August 1969.

15. Storm and Combined Sewer Demonstration Projects. Environmental Protection Agency. January 1970.

16. Field, R. and Weigel, P. Urban Runoff and Combined Sewer Overflow. Journal WPCF, 45. No. 6, pp 1108-1115. 1973.

Biological Treatment

1. A Literature Search and Critical Analysis of Biological Trickling Filter Studies-Vol. I. The Dow Chemical Company. 17050 DDY. Environmental Protection Agency. December 1971.

2. A Literature Search and Critical Analysis of Biological Trickling Filter Studies-Vol. II. The Dow Chemical Company. 17050 DDY. Environmental Protection Agency. December 1971.

3. Feasibility Studies of Applications of Catalytic Oxidation in Wastewater. Southern Illinois University. 17020 ECI. Environmental Protection Agency. November 1971.

REFERENCES (Continued)

4. Design Guides for Biological Wastewater Treatment Processes. The City of Austin, Texas, and Center for Research in Water Resources. 11010 ESQ. Environmental Protection Agency. August 1971.

5. Marki, E. Results of Experiments by EWAG with the Rotating Biological Filter. Eidg. Technische Hochschule, Zurich-Forthildungskurs der EWAG. 1964.

6. Utilization of Trickling Filters for Dual Treatment of Dry and Wet Weather Flows. Edison Water Quality Research Laboratory. Preliminary report for Environmental Protection Agency. 1972.

Disinfection

1. An Investigation of Light-Catalyzed Chlorine Oxidation for Treatment of Wastewater. Midwest Research Institute. 17020 (14-12-72). Environmental Protection Agency. December 1968.

2. Browning, G.E. and McLaren, F.R. Experiences With Wastewater Disinfection in California. Journal WPCF, 39, No. 8, p 1351. 1967.

3. Disinfection Treatment of Combined Sewer Overflows. O'Brien and Gere Engineers, Inc. 11020 HFR. Trip report to review progress. February 5, 1973.

4. Evens, et al. Treatment of Urban Stormwater Runoff. Journal WPCF, 40, No. 5, Part 2, pp R162-R170. 1968.

5. Glover, G.E. High Rate Disinfection of Combined Sewer Overflow. Presented at Combined Wastewater Systems Training Course sponsored jointly by the N.Y. State Department of Environmental Conservation and Environmental Protection Agency. Rochester. November 29, 1972.

6. Glover, G.E. Problems in Obtaining Adequate Sewage Disinfection. ASCE Sanitary Engineering, 98, No. 4, pp 671-673. 1972.

7. Graber, S.D. Discussion/Communication on Hydraulic Model Studies of Chlorine Contact Tanks. Journal WPCF, 44, No. 10, pp 2029-2035. 1972.

8. Fair, G.M., Geyer, J.C., and Okun, D.A. Water and Wastewater Engineering: Volume 2-Water Purification and Wastewater Treatment and Disposal. New York, John Wiley & Sons. 1958.

9. Liquid Chlorine: Its Properties, Transportation Equipment, and Safe Handling. Allied Chemical Corporation. 1961.

10. Kothandaraman, V. and Evans, R.L. Hydraulic Model Studies of Chlorine Contact Tanks. Journal WPCF, 44, No. 4, pp 625-633. 1972.

11. Kothandaraman, V., et al. Performance Characteristics of Chlorine Contact Tanks. Journal WPCF, 45, No. 4, pp 611-619. 1973.

12. Ozone Bids for Tertiary Treatment. Environmental Science & Technology, 4, No. 11, pp 893-894. 1970.

13. Pearce, L. (Chairman). Chlorination in Sewage Disposal. Report of APHA Committee on Sewage Disposal. Printed by Wallace & Tiernan Co., Inc. 1933.

14. Proceedings of the National Specialty Conference on Disinfection. American Society of Civil Engineers. University of Massachusetts. Amherst. July 8-10, 1970.

15. Process Design Manual for Upgrading Existing Wastewater Treatment Plants. Roy F. Weston, Inc. 17090 GNQ. Environmental Protection Agency. October 1971.

16. Smith J.E. Treatment of Combined Sewer and Storm Water Overflows. Progress report to O'Brien & Gere Engineers, Inc., Syracuse, N.Y. July 10, 1973.

REFERENCES (Continued)

17. Struzeski, E. J., Jr. Current Status on Control and Treatment of Storm and Combined Sewer Overflows. Presented at the EPA Technology transfer Program, Design Seminar on Waste Water Treatment Facilities. Boston. May 26-27, 1971.

18. Weiss Street Combined Sewage Overflow Storage and Treatment Facility, Saginaw, Michigan. Metcalf & Eddy, Inc. October 1972.

19. Ozonation in Sewage Treatment. University Extension, University of Wisconsin. November 9-10, 1971.

20. Pavia, E.H. and Powell, C.J. Stormwater Disinfection at New Orleans. Journal WPCF, 41, No. 4, pp 591-606. 1969.

21. Post Construction Report: Storm Detention and Chlorination Station. The Commonwealth of Massachusetts, Metropolitan District Commission. 11020 FAT (7-Mass-1). Draft report for Environmental Protection Agency. March 1972.

22. Spring Creek Marinac Pollution Control Project--Report on Use of Hypochlorite for Treatment of Storm Overflows. Greeley & Hansen, Engineers. New York, N.Y. March 1964.

Dissolved Air Flotation

1. Development of a Flocculation-Flotation Concept for Solids Separation in Storm Sewer Systems. Hercules, Inc. 11023 EYC. Interim report for Environmental Protection Agency. April 1971.

2. Dissolved Air Flotation, Appendix A, Phase 1--Pre-Construction Studies on Quality and Quantity Relationships of Combined Sewage Flows and Receiving Water Studies at Outer Marina Beach. Engineering-Science, Inc. Grant No. WPRD-258-01-68. Environmental Protection Agency. July 1971.

3. Gupta, M.K. Feasibility Studies for the Upgradation of Flotation Treated Combined Sewer Overflows. Report for the Department of Natural Resources, Madison, Wisconsin. March 1973.

4. Smith, E.J. and Locy, V.P. Air Flotation Pilot Plant Operation at Niagara Falls. Presented to New York Sewage and Industrial Wastes Association. 1960.

5. The Use of Screening/Dissolved-Air Flotation for Treating Combined Sewer Overflows. Rex Chainbelt, Inc. Presented at Symposium on Storm and Combined Sewer Overflows. Chicago. June 22-23, 1970. Report for Environmental Protection Agency.

Drainage Area Control

1. A Search: New Technology for Pavement Snow and Ice Control. Edison Water Quality Research Laboratory. Z-800615. Environmental Protection Agency. December 1972.

2. Chiang, S.L. A Crazy Idea on Urban Water Management. Water Resources Bulletin, 7, No. 1, pp 171-174. 1971.

3. Cleveland, J.G., Reid, G.W., and Walters, P.R. Storm Water Pollution From Urban Land Activity. Presented at ASCE Annual and Environmental Meeting. Chicago. October 15-17, 1969. Preprint 1033.

4. Dawdy, D.R. Knowledge of Sedimentation in Urban Environments. ASCE Journal Hydraulic Division, 93, No. HY 6, pp 235-245. 1967.

5. Guy, H.P. Research Needs Regarding Sediment and Urbanization. ASCE Journal Hydraulic Division, 93, No. HY 6, pp 247-254.

6. Peters, G.L. and Troemper, A.P. Reduction of Hydraulic Sewer Loading by Downspout Removal. Journal WPCF, 41, No. 1, pp 63-81. 1969.

7. Reduction of Ground-Water Infiltration Into Sewers by Zone Pumping at Meridian, Idaho. Hoffman & Fiske Consulting Engineers. Grant 29-IDA-2. Environmental Protection Agency. June 1969.

8. Remus, G.J. Keep Street Debris Out of the Sewers. The American City, p 52. December 1968.

9. Request for Proposal Related to the Environmental Impact of Highway Deicing. Edison Water Quality Research Division, Environmental Protection Agency. February 24, 1972.

10. Scheidt, M.E. Environmental Effects of Highways. ASCE Sanitary Engineering Division 93, No. SA 5, pp 17-25. 1967.

11. Urban Soil Erosion and Sediment Control. National Association of Counties Research Foundation. 15030 DTL. Environmental Protection Agency. May 1970.

12. Wolman, M.G., and Schick, A.P. Effects of Construction on Fluvial Sediment, Urban and Suburban Areas of Maryland. Water Resources Research, 3, No. 2, pp 451-464. 1967.

Filtration

1. Berg, E.L. and Brunner, C.A. Pressure Filtration of Secondary Treatment Plant Effluent. Water & Wastes Engineering, 6, No.10, pp 54-58. 1969.

2. Hydrotechnic Corporation. Ultra High Rate Filtration System for Treatment of Combined Sewage Overflows. Presented at the WPCF Conference. San Francisco. October 4, 1971.

3. Lynam, B., Ettelt, G., and McAloon, T. Tertiary Treatment at Metro Chicago by Means of Rapid Sand Filtration and Microstrainers. Journal WPCF, 41, No.2, Part 1, p 247. 1969.

4. Mixon, F.O. Filterability and Microscreener Design. Journal WPCF, 42, No.11, pp 1944-1950. 1970.

5. Rimer, A.E. Filtration Through a Trimedia Filter. ASCE Sanitary Journal, 94, SA-3, pp 521-540. 1968.

Mathematical Modeling

1. Bowers, E.B., Harris, G.S., and Pabst, A.E. Status Report on the Real-Time Computation of Runoff and Storm Flow in the Minneapolis-St. Paul Interceptor Sewers. University of Minnesota, Memorandum No. M-118. 1968.

2. Chen, C.W. and Shubinski, R.P. Computer Simulation of Urban Storm Water Runoff. ASCE Hydraulics Division, 97, pp 289-301. 1971.

3. Feuerstein, D.L. A Method for Assessing the Extent of Pollution from Stormwater Runoff from an Urban Area. Envirogenics Company. Presented at the 43rd Annual Conference of the Water Pollution Control Federation. Boston. October 4-9, 1970.

4. Harris, G.S. Status Report on Real-Time Estimating of Runoff in the Minneapolis-St. Paul Metropolitan Area. University of Minnesota, Memorandum No. M-119. 1968.

5. Harris, G.S. Status Report on Mathematical Models of Major Diversion Structures in the Minneapolis-St. Paul Interceptor Sewer System. University of Minnesota, Memorandum No. M-120. 1968.

6. Harris, G.S. Status Report on Development of a Computer Program to Route Runoff in the Minneapolis-St. Paul Interceptor Sewers. University of Minnesota, Memorandum No. M-121. 1968.

7. Horn, D.R. and Dee, N. Synthesis of the Inlet Hydrograph from Pervious and Combination Pervious-Impervious Drainage Areas. The Johns Hopkins University, Technical Report 7. 1967.

8. Schaake, J.C., Jr., et al. Experimental Examination of the Rational Method. ASCE Hydraulics Division, 93, No. HY 6, pp 353-370. 1967.

9. Lorah, W.L. and Wright, K.R. Urban Storm Hydrograph Analysis in Denver Region. Presented at ASCE National Water Resources Engineering Meeting. Memphis. January 26-30, 1970. Preprint 1143.

REFERENCES (Continued)

10. The Effects of Urbanization on Unit Hydrographs for Small Watersheds, Houston, Texas, 1964-67. Tracor. Contract No. 14-01-0001-1580. U.S. Office of Water Resources Research. September 1968.

11. The Effects of Urbanization on Unit Hydrographs for Small Watersheds, Houston, Texas, 1964-67, Appendixes: Data Compilation, Volume 2. Tracor. Contract No. 14-01-0001-1580. U.S. Office of Water Resources Research. September 1968.

12. Tucker, L.S. Availability of Rainfall-Runoff Data for Sewered Drainage Catchments. American Society of Civil Engineers. Technical Memorandum No.8. 1969.

13. Zepp, P.L., et al. A Computer Program for Sewer Design and Cost Estimation. Regional Planning Council, Baltimore, Maryland. April 1969.

Physical-Chemical Treatment

1. A Comparison of Expanded-Bed and Packed-Bed Adsorption Systems. FMC Corporation. 17020--- 12/68. Environmental Protection Agency. December 1968.

2. Advanced Wastewater Treatment Using Powdered Activated Carbon in Recirculating Slurry Contactor-Clarifiers. Infilco. 17020 FKB. Environmental Protection Agency. July 1970.

3. Application of Hyperfiltration to Treatment of Municipal Sewage Effluents. Oak Ridge National Laboratory. 17030 EOH. Environmental Protection Agency. January 1970.

4. Appraisal of Granular Carbon Contacting--Phase I: Evaluation of the Literature on the Use of Granular Carbon for Tertiary Waste Water Treatment, Phase II: Economic Effect of Design Variables. Contract No. 14-12-105. The M.K. Kellogg Company. 17020 DVJ. Environmental Protection Agency. May 1969.

5. Appraisal of Granular Carbon Contacting--Phase III: Engineering Design and Cost Estimate of Granular Carbon Tertiary Waste Water Treatment Plant. Contract No. 14-12-105. Swindell-Dressler Company. 17020 DNJ. May 1969.

6. Beebe, R.L. and Stevens, J.I. Activated Carbon System for Wastewater Renovation. Water and Wastes Engineering, 4, No. 1, pp 43-45. 1967.

7. Carbon Column Operation in Waste Water Treatment. Syracuse University. 17020 DZO. Environmental Protection Agency. November 1970.

8. Demineralization of Wastewater by the Transport-Depletion Process. Southern Research Institute. 17040 EUN. Environmental Protection Agency. February 1971.

9. Electroosmotic Pumping for Dewatering Sewage Sludge. Rocketdyne. 17070 EHE. Environmental Protection Agency. July 1970.

10. Feasibility Studies of Applications of Catalytic Oxidation in Wastewater. Southern Illinois University. 17020 ECI. Environmental Protection Agency. November 1971.

11. Feasibility Study of Regenerative Fibers for Water Pollution Control. Uniroyal, Inc. 17040 DFC. Environmental Protection Agency. October 1970.

12. Full-Scale Raw Wastewater Flocculation with Polymers. Washington D.C. Department of Sanitary Engineering. 17050 EJB. Environmental Protection Agency. November 1970.

13. Full-Scale Wastewater Treatment with Powdered Activated Carbon. Zimpro, Inc. March 1, 1973.

14. Hager, D.G. and Reilly, P.B. Clarification-Adsorption in the Treatment of Municipal and Industrial Wastewater. Journal WPCF, 45, No. 5, Part 1, p 794. 1970.

15. Improving Granular Carbon Treatment. FMC Corporation. 17020 DGN. Environmental Protection Agency. July 1971.

16. Jelen, F.C. Cost and Optimization Engineering. San Francisco, McGraw-Hill Book Company. 1970. p 310.

17. Weber, W.J., et al. Physiochemical Treatment of Wastewater. Journal WPCF, 42, No. 1, p 83. 1970.

18. Westrick, J.J. Physical-Chemical Alternatives to Biological Treatment. Presented at the Seminar on Advanced Waste Treatment, FWPCA Federal Activities Branch. Washington. January 15, 1970.

19. Chemical Treatment of Combined Sewer Overflows. The Dow Chemical Company. 11023 FDB. Environmental Protection Agency. September 1970.

20. Rosenkranz, W.A. Storm and Combined Sewer Technology Branch Critique of In-Pipe Adsorption-Coagulation, Tube Settling, Multi-Media Filtration with Chemical Regeneration. Environmental Protection Agency. December 1971.

Sampling

1. Duff, H.W. and Hsieh, C.C. Seattle Rain-Gaging Program and Rainstorm Data. Presented at ASCE National Water Resources Engineering Meeting. Memphis. January 1970.

2. Proposal for the Development of Fluidic Sampling Equipment for Combined Sewer Usage. Peter A. Freeman Associates, Inc. May 1972.

3. Shelly, P.E. and Kirkpatrick, G.A. An Assessment of Automatic Sewer Flow Samplers. Hydrospace-Challenger, Inc. Contract No. 68-03-0155. Environmental Protection Agency. June 1973.

4. Suspended Solids Monitor. American Standard, Inc. 11020 DZB. Environmental Protection Agency. August 1972.

Screening

1. In-Sewer Fixed Screening of Combined Sewer Overflows. Envirogenics Company. 11024 FKJ. Environmental Protection Agency. October 1970.

2. Diaper, E.W.J. Tertiary Treatment by Microstraining. Water & Sewage Works, 116, No. 6, pp 202-207. 1969.

3. Diaper, E.W.J. A New Method of Treatment for Surface Water Supplies. Water & Sewage Works, 117, No. 11, p 373. 1970.

4. Glover, G.E. Application of Microstraining to Combined Sewer Overflow. Presented at Rochester, N.Y., Combined Wastewater Systems Training Course sponsored jointly by the N.Y. State Department of Environmental Conservation and Environmental Protection Agency. November 29, 1972.

5. Large-Scale Demonstration of Treatment of Storm-Caused Overflow by the Screening Method. City of Fort Wayne. 11020 GYU. Grant application. June 1972.

6. Lynam, B., Ettelt, G., and McAloon, T. Tertiary Treatment at Metro Chicago by Means of Rapid Sand Filtration and Microstrainers. Journal WPCF, 41, No.2, Part 1, p 247. 1969.

7. Mixon, F.O. Filterability and Microscreener Design. Journal WPCF, 42, No. 11, pp 1944-1950. 1970.

8. Sequential Screening Treatment of Combined Sewer Overflows. Rex Chainbelt, Inc. 11020 FDC. Environmental Protection Agency. August 1972.

9. The Use of Screening/Dissolved-Air Flotation for Treating Combined Sewer Overflows. Rex Chainbelt, Inc. Presented at Symposium on Storm and Combined Sewer Overflows. Chicago. June 22-23, 1970. Report for Environmental Protection Agency.

REFERENCES (Continued)

Sewer Design, Material, and Maintenance

1. Ahrens, J.F., et al. Chemical Control of Tree Roots in Sewer Lines. Journal WPCF, 42, No. 0, pp 1643-1655. 1970.

2. Evaluation of External Sealing Methods to Reduce Storm Flow Effect in Sewerage Systems. Final Progress Report, County of Sonoma Sanitation Department, WPD 111-01-66. Environmental Protection Agency. 1966.

3. FRP Pipe Design Manual. The Ceilcote Company. 1971.

4. Godfrey. What's New in Water and Sewer Pipe? Civil Engineering, 40, No. 10, pp 46-52. 1970.

5. Graeser, H.J. Dallas Has Modern Approach to Sewer Installation. Water & Sewage Works, 116, pp 326-331. 1969.

6. Lysne, D.K. Hydraulic Design of Self-Cleaning Sewage Tunnels. ASCE Sanitary Engineering, 95, No. SA 1, pp 17-36. 1969.

7. Peters, G.L. Report of A Sewer Sealing Process Using Infilcheck #10, A Product of Sealite, Inc. Springfield Sanitary District. October 9, 1968.

8. Polyethylene Manholes Reduce Pipeline Leaks. Chemical Engineering. April 3, 1972.

9. Pomeroy, R.D. Sanitary Sewer Design and Hydrogen Sulfide Control. Presented at the 1970 Concrete Pipe Sewer and Culvert Seminar, Sponsored by the Portland Cement Association and the California Precast Concrete Pipe Association: San Diego, April 14; Downey, April 15; Sacramento, April 16; Oakland, April 17, 1970.

10. Report on Springfield Illinois Treatment Project, Infilcheck 10. Springfield Sanitary District. October 15, 1968.

11. Rooting out a Sewer Problem. Water & Wastes Engineering, 9, No. 11, p. 26. 1972.

12. Sewer Renewal with Aldyl D Polyethylene Pipe. E. I. DuPont DeNemours & Co. Brochure and miscellaneous articles. 1973.

13. Stall, J.B. and Terstriep, M.L. Storm Sewer Design--An Evaluation of the RRL Method. 11030 FLN. Environmental Protection Agency. October 1972.

14. Supplemental Report on Sewer Sealing Using Infilcheck #10. Springfield Sanitary District. October 29, 1969.

15. Techite Technical Information. United Technology Center. 1968.

16. The Construction and Technical Evaluation of the Various Aspects of an Aluminum Storm Sewer System. Schedule of Prices and Tabulation of Bids. Chamlin & Associates, Inc., Peru, Illinois. 11032 DTI. June 1971.

17. Trenchless Sewer Construction and Sewer Design Innovations. Sussex County Council, Georgetown, Delaware. Demonstration Project No. S-800690. Environmental Protection Agency. June 1972.

18. Willhoff, T.L. ABS Truss Pipe for Sewers. Water & Wastes Engineering, 6, pp 40-42. 1969.

19. Lysne, D.K. Hydraulic Design of Self-Cleaning Sewage Tunnels. ASCE Sanitary Engineering, 95, SA 1, pp 17-36. 1969.

Sewer Separation

1. A Pressure Sewer System Demonstration. EPA Region I. 11022 DQI. Environmental Protection Agency. November 1972.

2. ASCE and Greeley and Hansen. Report on Milwaukee Study Area. American Society of Civil Engineers Combined Sewer Separation Project. December 1968.

REFERENCES (Continued)

3. Brown and Caldwell. Separation of Combined Wastewater and Storm Drainage Systems: San Francisco Study Area. American Society of Civil Engineers. 1968.

4. Project C--Improvements to the Sewerage System of the Nation's Capital. District of Columbia, Department of Sanitary Engineering. 1967.

5. Sewer Separation Program for Washington, D.C. District of Columbia, Department of Sanitary Engineering. 1960.

6. Sewer Within a Sewer. Water Works & Wastes Engineering, 1, No. 1, pp 36-37. 1964.

Sewer System Operation and Control

1. Anderson, J.J., et al. How to Control Sewer Overflows. Water & Wastes Engineering, 9, No. 9, pp 60-62. 1972.

2. Computerized Monitoring System Helps San Francisco Control Overflow. Honeywell, Inc. Water & Sewage Works, 119, No. 8, pp 44-45. 1972.

3. City and County of San Francisco Plan for Research, Development and Demonstration Period of Wet-Weather Upstream Control Program June 1972-February 1977. June 1972.

4. Development of New and Improved Devices for Automatic Sampling of Storm and Combined Sewer Flows. Hydrospace-Challenger, Inc. Negotiated contract with Environmental Protection Agency. July 1972.

5. Development of a Swirl Primary Separator and a Helical Combined Sewer Overflow Dual Functioning Regulator/Separator. APWA Contract Proposal, Additional Considerations, Environmental Protection Agency No. 802208. February 7, 1973.

6. Duff, H.W. and Hsieh, C.C. Seattle Rain-Gaging Program and Rainstorm Data. Presented at ASCE National Water Resources Engineering Meeting. Memphis. January 1970.

7. Eagleson, P.S. Unit Hydrograph Characteristics for Sewered Areas. ASCE Hydraulics Division, 88, No. HY 2, Proceedings Paper 3069, pp 1-25. 1962.

8. Gibbs, C.V. and Alexander, S.M. CATAD System Controls for Regulation of Combined Sewage Flows. Water & Wastes Engineering, 6, No. 8, pp 46-49. 1969.

9. Hastings, C.R. The LE Acoustic Flowmeter, an Application to Discharge Measurement. Presented at Annual Convention of The New England Water Works Association. Boston. September 1969.

10. Lager, J.A., Smith, W.G., and Mullis, M.K. Seattle-Portland inspection trip. Metcalf & Eddy, Inc. December 6-8, 1972.

11. Leiser, C.P. Samplers Used in Seattle, Washington. December 8, 1972.

12. Letter Progress Report. Badger Meter, Inc., to Sewerage Commission of the City of Milwaukee. 11024 FVQ. October 16, 1972.

13. MacGregor, D. Wastewater Measuring and Sampling Techniques. Tri-Aid Sciences, Inc. October 1969.

14. McPherson, M.B. Feasibility of the Metropolitan Water Intelligence System Concept (Integrated Automatic Operational Control). American Society of Civil Engineers. December 1971.

15. Magnetic Flowmeters. Fischer & Porter Catalog C10D.

16. Moorehead, G.J. Overflows from Combined Sewers in Washington, D.C. Journal WPCF, 33, No. 7, pp 711-720. 1961.

17. Portable Device for Measuring Wastewater Flow in Sewers. Hittman Associates, Inc. Contract No. 14-12-909. Environmental Protection Agency. December 1972.

18. Proposal for the Development of Fluidic Sampling Equipment for Combined Sewer Usage. Peter A. Freeman Associates, Inc. May 1972.

19. Report on Operations. Municipality of Metropolitan Seattle. 1971.

20. Shelley, P.E. and Kirkpatrick, G.A. An Assessment of Automatic Sewer Flow Samplers. Hydrospace-Challenger, Inc. Contract No. 68-03-0155. Environmental Protection Agency. June 1973.

21. Swirl Concentrator Promises to Reduce Pollution. APWA Reporter, p 24. May 1972.

22. Summary of Experimental Tests Results of Effects of Polymer Additives on Open Channel Flows. Columbia Research Corporation. Contract No. 68-01-0168. Environmental Protection Agency. December 1972.

23. Suspended Solids Monitor. American Standard, Inc. 11020 DZB. Environmental Protection Agency. August 1972.

24. Tarazi, D.S., et al. Comparison of Wastewater Sampling Techniques. Journal WPCF, 42, No. 5, Part 1, p 708. 1970.

25. Thomas, H.A. The Hydraulics of Flood Wave Movements in Rivers. Carnegie Institute of Technology Engineering Bulletin. 1934.

26. Tucker, L.S. Raingage Networks in the Largest Cities. American Society of Civil Engineers. Technical Memorandum No. 9. 1969.

27. Tucker, L.S. Oakdale Gaging Installation, Chicago - Instrumentation and Data. American Society of Civil Engineers. Technical Memorandum No. 2. 1968.

28. Weidner, R.B., Wiebel, S.R., and Robeck. G.G. An Automatic Mobile Sampling and Gaging Unit. Public Works, 99, No. 1, pp 78-80. 1968.

29. Eiffert, W.T and Fleming, P.J. Pollution Abatement Through Sewer System Control. Journal WPCF, 41, No. 2, pp 285-291. 1969.

30. Riddle, W.G Infiltration in Separate Sanitary Sewers. Journal WPCF, 42, No. 9, p 1676. 1970.

Storage

1. City of Milwaukee. Humboldt Avenue Pollution Abatement Demonstration Project. December 1971.

2. City of Milwaukee. Humboldt Avenue Pollution Abatement Demonstration Project - General Project Description. December 1971.

3. Combined Sewer Temporary Underwater Storage Facility. Melpar: An American Standard Company. 11022 DPP. Environmental Protection Agency. October 1970.

4. Combined Underflow-Storage Plan for Pollution and Flood Control in the Chicago Metropolitan Area. City of Chicago Department of Public Works, Bureau of Engineering. September 1969.

5. Composite Drainage Plan for the Chicago Area. City of Chicago, Department of Public Works, Bureau of Engineering. September 1968.

6. Demonstration of Void Space Storage With Treatment and Flow Regulation. Karl R. Rohrer Associates, Inc. 11020 DXH. Progress report for Environmental Protection Agency. January 1973.

7. Drainage Criteria Manual. Chapter on Storage. December 1968.

8. Escritt, L.B. Re-Examination of the Storm Tank Problem. Water & Waste Treatment, pp 298-300. September/October 1969.

9. Feasibility of a Stabilization-Retention Basin in Lake Erie at Cleveland, Ohio. Havens and Emerson. 11020--- 05/68. Environmental Protection Agency. May 1968.

10. Gregory, J.H., et al. Intercepting Sewers and Storm Stand-By Tanks at Columbus, Ohio. ASCE Proceedings, October 1933, Paper No. 1887, pp 1295-1331.

11. Knudsen, Jorgen. Operation of Detention Tank for Humboldt Avenue Project.

REFERENCES (Continued)

12. Lager, J.A. Storage of Urban Runoff. Lecture 11, presented at the Hydrological Engineering Center Stormwater Seminar. Davis. February 8, 1973.

13. Mallory, C.W. The Beneficial Use of Storm Water. Hittman Associates, Inc. 11030 DNK. Environmental Protection Agency. January 1973.

14. Report to City of Saginaw, Michigan, Upon the Recommended Plan for Abating Pollution From Combined Sewage Overflows. Metcalf & Eddy, Inc. 1972.

15. Silo in the Sewer Stores Storm Water Overflow. Engineering News-Record. May 25, 1972.

16. Table of Significant Data - Calumet Intercepting Sewer 18E, Extension-A System. Data for Chicago's Deep Tunnel. 1972.

17. Table of Significant Data - Southwest 13A. Data for Chicago's Deep Tunnel. July 1970.

18. The Impact of the Deep Tunnel Plan on the Water Resources of Northeast Illinois. Harza Engineering Company and Bauer Engineering, Inc. The Metropolitan Sanitary District of Greater Chicago. 1969.

19. Preload Prestressed Concrete. Preload Company, Inc. December 1972.

20. Silo Demonstration Project. Monthly Progress Report, December 1972. Meridian Engineering, Inc. for City of Lancaster, Pennsylvania. 11023 GSC. Environmental Protection Agency. January 1973.

21. Silo Demonstration Project, Monthly Progress Report, May 1972. Meridian Engineering, Inc. for City of Lancaster, Pennsylvania. 11023 GSC. Environmental Protection Agency. May 1972.

22. Silo Demonstration Project, Monthly Progress Report, June 1972. Meridian Engineering, Inc. for City of Lancaster, Pennsylvania. 11023 GSC. Environmental Protection Agency. July 1972.

23. Wright-McLaughlin Engineers. Urban Storm Drainage, Criteria Manual, Vol. 1. Report for Denver Regional Council of Governments. March 1969.

24. Koelzer, V.A., Bauer, W.J., and Dalton, F.E. The Chicago Area Deep Tunnel Project -- A Use of the Underground Storage Resource. Journal WPCF, 41, pp 515-534. 1969.

Stormwater Problem

1. A Comprehensive Plan for the Milwaukee River Watershed, Vol. 1: Inventory Findings and Forecasts. Planning Report No. 13. Southeastern Wisconsin Regional Planning Commission. December 1970.

2. Banks, N. Government R & D in Water Pollution Control. Surveyor, pp 34-37. September 23, 1972.

3. Cazzaza, J. Boston Still Faces a Pollution Control Problem. Water & Wastes Engineering, 7, No. 9, pp 44-47. 1970.

4. Combined Sewer Overflow Abatement Technology. Symposium on Storm and Combined Sewer Overflows, Chicago, Illinois, June 22-23, 1970. 11024--- 06/70. Environmental Protection Agency. June 1970.

5. Cordone, A.J. and Kelly, D.W. The Influences of Inorganic Sediment on the Aquatic Life of Streams. California Fish & Game, 47, No. 2, pp 189-228. 1961.

6. Cywin, A. and Rosenkranz, W.A. Advances in Storm and Combined Sewer Pollution Abatement Technology. Presented at the 4th Annual Conference of the Water Pollution Control Federation. San Francisco. October 3-8, 1971. Environmental Protection Agency.

7. Cywin, A. and Rosenkranz. W.A. Storm and Combined Sewer Research and Development. Presented at ASCE Annual and Environmental Meeting. Chicago. October 13-17, 1969. Preprint 1039.

8. DeFilippi, J.A. and Shih, C.S. Characteristics of Separated Storm and Combined Sewer Flows. Journal WPCF, 43, No. 10, pp 2033-2058. 1971.

9. Dobbins, W.E. Quantity and Composition of Storm Sewage Overflows. Presented at ASCE Sanitary Engineering Division Symposium on Treatment of Storm Sewage Overflows. April 17, 1962.

10. Engineering Investigation of Sewer Overflow Problem: Roanoke, Virginia. Hayes, Seay, Mattern & Mattern. 11024 DMS. Environmental Protection Agency. May 1970.

11. Espey, W.H., Morgan, C.W., and Masch, F.D. A Study of Some Effects of Urbanization on Storm Runoff From a Small Watershed. Technical Report HYO 07-6501. Texas Water Commission. July 1965.

12. Gibbs, C.F., Henry, C.J., and Kersnar, F.J. How Seattle Beat Pollution. Water & Wastes Engineering, 9, No. 2, pp 30-40. 1972.

13. Field, R. Annual Literature Review. Journal WPCF. June 1973.

14. Field, R. Management and Control of Combined Sewer Overflows: Program Overview. Presented at 44th Annual Meeting of the New York Water Pollution Control Association. New York. January 26-28, 1972.

15. Johnson, D.F. Nation's Capital Enlarges its Sewerage System. Civil Engineering, pp 428-431 and 502-505. 1958.

16. Johnson, R.E., et al. Dustfall as a Source of Water Quality Impairment. Journal of the Sanitary Engineering Division, SA 1, pp 245-267. February 1966.

17. McPherson, M.B. Hydrologic Effects of Urbanization in the United States. Technical Memorandum No. 17. American Society of Civil Engineers. June 1972.

18. McPherson, M.B. Urban Runoff. Technical Memorandum No. 18. American Society of Civil Engineers. August 1972.

19. Nash, N., Jerome, D., and Epstein, R. Characteristics of Combined Overflows. Paper received during visit to Jamaica Bay (Spring Creek) Project.

20. Nutrient Removal Using Existing Combined Sewer Overflow Treatment Facilities (Supplemental Work Proposal). Onondaga County, Syracuse, N.Y. 11020 HFR. Environmental Protection Agency. February 2, 1973.

21. Nicoli, E.H. Work in Scotland. Surveyor, pp 37-39. September 23, 1972.

22. Pollutional Effects of Stormwater and Overflows from Combined Sewer Systems: A Preliminary Appraisal. U.S. Department of Health, Education, and Welfare. 1964.

23. Romer, H. and Klashman, L.M. How Combined Sewers Affect Water Pollution. Parts 1 & 2. Public Works, 94, Nos. 3 & 4, pp 100 and 88. 1963.

24. Romer, H., Lagerre, G., and Gallagher, T. Effect of Combined Sewage Overflows on Waters Around New York City. Presented at the ASCE Sanitary Engineering Division Symposium on Treatment of Storm Sewage Overflows. April 17, 1962.

25. Rice, I.M. New Approach to Applied Research. Water & Wastes Engineering, 8, No. 2, pp 20-22. 1971.

26. Rosenkranz, W.A. Developments in Storm and Combined Sewer Pollution Control. Presented at Meeting of the New England Water Pollution Control Association.

27. Rosenkranz, W.A., Wright, D.R., and Cywin, A. Improving the Efficiency of Sewerage Systems. Presented at the Public Works Congress and Equipment Show. Miami Beach. October 19-24, 1968.

28. Soderlund, G., Lehtinen, H., and Friberg, S. Physicochemical and Microbiological Properties of Urban Storm-Water Run-off. Presented at the 5th International Water Pollution Research Conference. July-August, 1970.

29. Special Report of the Department of Public Health Relative to the Preparation of Plans and Maps for the Disposal of Sewage in the Merrimack River Valley. House No. 3733. The Commonwealth of Massachusetts. 1964.

REFERENCES (Continued)

30. Storm and Combined Sewer Pollution Sources and Abatement: Atlanta, Georgia. Black, Crow and Eidsness, Inc. 11024 ELB. Environmental Protection Agency. January 1971.

31. Systematic Study and Development of Long-Range Programs of Urban Water Resources Research (First Year Report). American Society of Civil Engineers. W69-03506. U.S. Office of Water Resources Research. September 1968.

32. Thomas, A.A. Design Criteria for Storm Water Disposal. Presented at the Fourth Annual Sanitary & Water Resources Engineering Conference. Vanderbilt University. June 4, 1965.

33. Ure, J.E. Reducing Pollution From Combined Sewer Overflows. APWA Reporter, pp 10-14. May 1972.

34. Viersman, W. Assessing the Quality of Urban Drainage. Public Works, 100, No. 10, pp 89-92. 1969.

35. Weather Bureau Rainfall Frequency Atlas of the United States. Technical Paper No. 4. U.S. Department of Commerce. Washington, D.C. May 1961.

36. Weibel, S.R., et al. Characterization, Treatment, and Disposal of Urban Stormwater. Presented at Third International Conference on Water Pollution Research. Munich, Germany. Water Pollution Control Federation. 1966.

37. Weibel, S.R., et al. Pesticides and Other Contaminants in Rainfall and Runoff. Journal AWWA, 58, No. 8, pp 1075-1084. 1966.

38. Wolman, M.G. and Schick, A.P. Effects of Construction on Fluvial Sediment, Urban and Suburban Areas of Maryland. Water Resources Research, 3, No. 2, pp 451-464. 1967.

39. Whipple, W., Jr. Preliminary Mass Balance of BOD on Three New Jersey Rivers. Rutgers University. U.S. Office of Water Resources Research. 1969.

40. Söderlund, G., Lehtinen, H., and Friberg, S. Physicochemical and Microbiological Properties of Urban Storm-Water Run-Off. Presented at the 5th International Water Pollution Research Conference. July-August 1970.

System Control

1. Computerized Monitoring System Helps San Francisco Control Overflow. Honeywell, Inc. Water & Sewage Works, 119, No. 8, pp 44-45. 1972.

2. Eagleson, P.S. Unit Hydrograph Characteristics for Sewered Areas. ASCE Hydraulic Division, 88, No. HY2, Proceedings Paper 3069, pp 1-25. 1962.

3. Gibbs, C.V., Henry, C.J., and Kersnar, F.J. How Seattle Beat Pollution. Water & Wastes Engineering, 9, No. 2, pp 30-40. 1972.

4. McPherson, M.B. Feasibility of the Metropolitan Water Intelligence System Concept (Integrated Automatic Operational Control). American Society of Civil Engineers. December 1971.

5. Research, Development and Demonstration Projects. Environmental Protection Agency. July 1970.

6. Thomas, H.A. The Hydraulics of Flood Wave Movements in Rivers. Carnegie Institute of Technology Engineering Bulletin. 1934.

Textbooks

1. Design and Construction of Sanitary and Storm Sewers. Prepared by a Joint Committee of the American Society of Civil Engineers and the Water Pollution Control Federation. 1969.

2. Fair, G.M., Geyer, J.C., and Okun, D.A. Waste and Wastewater Engineering: Volume I. Water Supply and Wastewater Removal. New York, John Wiley & Sons. 1966.

3. Hordenbergh, W.A. and Rodie, E.B. Water Supply and Waste Disposal. Scranton, International Textbook Company. 1966.

REFERENCES (Continued)

4. Imhoff, K. and Fair, G.M. Sewage Treatment. New York, John Wiley & Sons. 1956. 2nd Ed.

5. Klein, L. River Pollution --2: Causes and Effects. Washington, D.C., Butterworth & Co., Ltd. 1967.

6. Klein, L. River Pollution --3: Control. Washington, D.C., Butterworth & Co., Ltd. 1966.

7. Lund, H.F., ed. Industrial Pollution Control Handbook. New York, McGraw-Hill Book Company. 1971.

8. Metcalf & Eddy. American Sewerage Practice, Vol. II: Construction of Sewers. New York, McGraw-Hill Book Company. 1915.

9. Statistical Summary: 1968 Inventory--Municipal Waste Facilities in the United States. No. CWT-6. Environmental Protection Agency. 1970.

10. Thomann, R.V. Systems Analysis & Water Quality Management. New York, Environmental Research & Applications, Inc. 1972.

Urban Runoff Characteristics

1. Urban Runoff Characteristics--Vol. 1: Analytical Studies. University of Cincinnati. 11024 DQU. Environmental Protection Agency. October 1972.

2. Urban Runoff Characteristics--Vol. II: Field Data. University of Cincinnati. 11024 DQU. Environmental Protection Agency. October 1972.

3. Urban Runoff Characteristics--Vol. II (Cont'd): Field Data. University of Cincinnati. 11024 DQU. Environmental Protection Agency. October 1972.

Section XVII

GLOSSARY, ABBREVIATIONS, AND CONVERSION FACTORS

GLOSSARY

Aerated lagoon--A natural or artificial wastewater treatment lagoon (generally from 4 to 12 feet deep) in which mechanical or diffused-air aeration is used to supplement the oxygen supply.

Biological treatment processes--Means of treatment in which bacterial or biochemical action is intensified to stabilize, oxidize, and nitrify the unstable organic matter present. Trickling filters, activated sludge processes, and lagoons are examples.

Combined sewage--Sewage containing both domestic sewage and surface water or stormwater, with or without industrial wastes. Includes flow in heavily infiltrated sanitary sewer systems as well as combined sewer systems.

Combined sewer--A sewer receiving both intercepted surface runoff and municipal sewage.

Combined sewer overflow--Flow from a combined sewer in excess of the interceptor capacity that is discharged into a receiving water.

Detention--The slowing, dampening, or attenuating of flows either entering the sewer system or within the sewer system by temporarily holding the water on a surface area, in a storage basin, or within the sewer itself.

Dilution ratio--The ratio of the quantity of combined sewer overflow or storm sewer discharge to the average quantity of diluting water available after initial mixing at the point of disposal or at any point under consideration.

Disinfection--The art of killing the larger portion of microorganisms in or on a substance with the probability that all pathogenic bacteria are killed by the agent used.

Domestic sewage--Sewage derived principally from dwellings, business buildings, institutions, and the like. It may or may not contain groundwater.

Dual treatment--Those processes or facilities designed for operating on both dry- and wet-weather flows.

Dynamic regulator--A semiautomatic or automatic regulator device which may or may not have movable parts that are sensitive to hydraulic conditions at their points of installation and are capable of adjusting themselves to variations in such conditions or of being adjusted by remote control to meet hydraulic conditions at points of installation or at other points in the total combined sewer system.

Equalization--The averaging (or method for averaging) of variations in flow and composition of a liquid.

First flush--The condition, often occurring in storm sewer discharges and combined sewer overflows, in which a disproportionately high pollutional load is carried in the first portion of the discharge or overflow.

Industrial wastewaters--The liquid wastes from industrial processes, as distinct from domestic sewage.

Infiltrated municipal sewage--That flow in a sanitary sewer resulting from a combination of municipal sewage and excessive volumes of infiltration/inflow resulting from precipitation.

Infiltration--The water entering a sewer system and service connections from the ground, through such means as, but not limited to, defective pipes, pipe joints, connections, or manhole walls. Infiltration does not include, and is distinguished from, inflow.

Infiltration ratio--The ratio of rainfall volume entering the sewers to the total rainfall volume.

Inflow--The water discharged into a sewer system and service connections from such sources as, but not limited to, roof leaders, cellar, yard, and area drains, foundation drains, cooling water discharges, drains from springs and swampy areas, manhole covers, cross connections from storm sewers and combined sewers, catch basins, stormwaters, surface

runoff, street wash waters, or drainage. Inflow does not include, and is distinguished from, infiltration.

In-system--Within the physical confines of the sewer pipe network.

Intercepted surface runoff--That portion of surface runoff that enters a sewer, either storm or combined, directly through catch basins, inlets, etc.

Interceptor--A sewer that receives dry-weather flow from a number of transverse combined sewers and additional predetermined quantities of intercepted surface runoff and conveys such waters to a point for treatment.

Municipal sewage--Sewage from a community which may be composed of domestic sewage, industrial wastes, or both.

Nonsewered urban runoff--That part of the precipitation which runs off the surface of an urban drainage area and reaches a stream or other body of water without passing through a sewer system.

Overflow--(1) The flow discharging from a sewer resulting from combined sewage, storm wastewater, or extraneous flows and normal flows that exceed the sewer capacity. (2) The location at which such flows leave the sewer.

Oxidation pond--A basin (generally 2 to 6 feet deep) used for retention of wastewaters before final disposal, in which biological oxidation of organic matter is effected by natural or artificially accelerated transfer of oxygen to the water from air.

Physical-chemical treatment processes--Means of treatment in which the removal of pollutants is brought about primarily by chemical clarification in conjunction with physical processes. The process string generally includes preliminary treatment, chemical clarification, filtration, carbon adsorption, and disinfection.

Physical treatment operations--Means of treatment in which the application of physical forces predominates. Screening, sedimentation, flotation, and filtration are examples. Physical treatment operations may or may not include chemical additions.

Plug flow--The passage of liquid through a chamber such that all increments of liquid move only in the direction of flow and at equal velocity.

Pollutant--Any harmful or objectionable material in or change in physical characteristic of water or sewage.

Pretreatment--The removal of material such as gross solids, grit, grease, and scum from sewage flows prior to physical, biological, or physical-chemical treatment processes to improve treatability. Pretreatment may include screening, grit removal, skimming, preaeration, and flocculation.

Regulator--A structure which controls the amount of sewage entering an interceptor by storing in a trunk line or diverting some portion of the flow to an outfall.

Retention--The prevention of runoff from entering the sewer system by storing on a surface area or in a storage basin.

Sampling train--The intake, method for gathering and transporting, tubing, and storage container of a sewer flow sampler.

Sanitary sewer--A sewer that carries liquid and water-carried wastes from residences, commercial buildings, industrial plants, and institutions, together with relatively low quantities of ground, storm, and surface waters that are not admitted intentionally.

Sewer--A pipe or conduit generally closed, but normally not flowing full, for carrying sewage or other waste liquids.

Sewerage--System of piping, with appurtenances, for collecting and conveying wastewaters from source to discharge.

Static regulator--A regulator device which has no moving parts or has movable parts which are insensitive to hydraulic conditions at the point of installation and which are not capable of adjusting themselves to meet varying flow or level conditions in the regulator-overflow structure.

Storm flow--Overland flow, sewer flow, or receiving stream flow caused totally or partially by surface runoff or snowmelt.

Storm sewer--A sewer that carries intercepted surface runoff, street wash and other wash waters, or drainage, but excludes domestic sewage and industrial wastes.

Storm sewer discharge--Flow from a storm sewer that is discharged into a receiving water.

Stormwater--Water resulting from precipitation which either percolates into the soil, runs off freely from the surface, or is captured by storm sewer, combined sewer, and to a limited degree sanitary sewer facilities.

Surcharge--The flow condition occurring in closed conduits when the hydraulic grade line is above the crown of the sewer.

Surface runoff--Precipitation that falls onto the surfaces of roofs, streets, ground, etc., and is not absorbed or retained by that surface, thereby collecting and running off.

Trickling filter--A filter consisting of an artificial bed of coarse material, such as broken stone, clinkers, slate, slats, brush, or plastic materials, over which sewage is distributed or applied in drops, films, or spray from troughs, drippers, moving distributors, or fixed nozzles, and through which it trickles to the underdrains, giving opportunity for the formation of zoogleal slimes which clarify and oxidize the sewage.

Urban runoff--Surface runoff from an urban drainage area that reaches a stream or other body of water or a sewer.

Wastewater--The spent water of a community. See Municipal Sewage and Combined Sewage.

ABBREVIATIONS

Organizations

APWA	American Public Works Association
ASCE	American Society of Civil Engineers
DMWS	Detroit Metropolitan Water Service
EPA	U.S. Environmental Protection Agency
MSDGC	Metropolitan Sanitary District of Greater Chicago
NPDES	National Pollution Discharge Elimination System
NSF	National Science Foundation
OWRR	Office of Water Resources Research
RD&D	Research, Development, and Demonstration Program (EPA)
USPHS	U.S. Public Health Service

Symbols

%	percent
$	dollar
°C	degree(s) Celsius (Centigrade)
~	approximately
>	greater than
<	less than
≥	greater than or equal to
≤	equal to or less than
¢	cents
/	per

Abbreviations

ABS	acrylonitrile butadiene styrene
avg	average
BOD_5	biochemical oxygen demand (5-day)
cf of cu ft	cubic foot (feet)
cfs	cubic feet per second
cf/lb	cubic feet per pound
cm	centimeter(s)
cm/hr	centimeter(s) per hour
cm/yr	centimeter(s) per year
COD	chemical oxygen demand
CPVC	chlorinated polyvinylchloride
cu m	cubic meter(s)
cu m/day	cubic meter(s) per day
cu m/min/day	cubic meter(s) per minute per day
cu m/min/ha	cubic meter(s) per minute per hectare
cu m/min/100 l	cubic meter(s) per minute per 100 liters
cu m/sec	cubic meter(s) per second
cy	cubic yard
degree C	degree(s) Celsius (Centigrade)
degree F	degree(s) Fahrenheit
DO	dissolved oxygen
DWF	dry-weather flow
eff.	effluent
ENR	Engineering News-Record (index)
F/M	food-to-microorganism ratio
fpm	feet per minute
fps	feet per second
FRP	glass fiber-reinforced plastic
ft	foot (feet)
g	gram(s)
gal.	gallon(s)
gal./inch diameter/ mile/day	gallons per inch diameter per mile per day

gpd/sq ft	gallon(s) per day per square foot
gpm/sq ft	gallon(s) per minute per square foot
ha	hectare
hr/yr	hour(s) per year
HST	heat shrinkable tubing
in.	inch(es)
in./hr	inch(es) per hour
in./yr	inch(es) per year
JTU	Jackson turbidity unit
kg	kilogram(s)
kg/sq cm	kilograms per square centimeter
kl	kiloliter(s)
km	kilometer(s)
kwh	kilowatt hour(s)
lb	pound(s)
lb/day	pounds per day
lb/mil gal.	pounds per million gallons
lb/min	pound(s) per minute
lb/yr	pounds per year
l/day/ha	liter(s) per day per hectare
l/kg	liter(s) per kilogram
l/min/sq m	liter(s) per minute per square meter
l/sec	liter(s) per second
l/sec/sq m	liter(s) per second per square meter
m	meter(s)
max	maximum
mg	milligram(s)
mgad	million gallons per acre per day
mgd	million gallons per day
mg/l	milligrams per liter
mil gal.	million gallons
min	minute(s)
min	minimum
Ml	megaliter(s)

ml	milliliter(s)
MLSS	mixed liquor suspended solids
ml/l	milliliter(s) per liter
mm	millimeter(s)
MPN	most probable number
m/sec	meter(s) per second
N	nitrogen
NA	not available
N/A	not applicable
P	phosphorus
pcf	pounds per cubic foot
ppm	parts per million
psf	pounds per square foot
psi	pounds per square inch
PVC	polyvinylchloride
PVDC	polyvinyldichloride
rpm	revolutions per minute
RRL	Road Research Laboratory
scfm	standard cubic feet per minute
sq cm	square centimeter(s)
sq ft	square foot (feet)
sq ft/mgd	square feet per million gallons per day
sq in.	square inch(es)
sq km	square kilometer(s)
sq mi	square mile(s)
sq m/cu m/sec	square meter per cubic meter per second
SS	suspended solids
STP	sewage treatment plant
SWMM	Storm Water Management Model
TOC	total organic carbon
TS	total solids
TVS	total volatile solids
VS	volatile solids
VSS	volatile suspended solids
yr	year(s)

CONVERSION FACTORS
English to Metric

English unit	Abbr.	Multiplier	Abbr.	Metric unit
acre	acre	0.405	ha	hectare
acre-foot	acre-ft	1,233.5	cu m	cubic meter
cubic foot	cf	28.32	l	liter
cubic feet per minute	cfm	0.0283	cu m/min	cubic meters per minute
cubic feet per second	cfs	28.32	l/sec	liters per second
cubic inch	cu in.	16.39 0.0164	cu cm l	cubic centimeter liter
cubic yard	cy	0.765 764.6	cu m l	cubic meter liter
degree Fahrenheit	deg F	0.555 (°F-32)	deg C	degree Celsius
feet per minute	fpm	0.00508	m/sec	meters per second
feet per second	fps	0.305	m/sec	meters per second
foot (feet)	ft	0.305	m	meter(s)
gallon(s)	gal.	3.785	l	liter(s)
gallons per acre per day	gad	9.353	l/day/ha	liters per day per hectare
gallons per capita per day	gcd	3.785	l/capita/day	liters per capita per day
gallons per day	gpd	4.381×10^{-5}	l/sec	liters per second
gallons per day per square foot	gpd/sq ft	1.698×10^{-3} 0.283	cu m/hr/sq m cu m/min/ha	cubic meters per hour per square meter cubic meters per minute per hectare
gallons per minute	gpm	0.0631	l/sec	liters per second
gallons per minute per square foot	gpm/sq ft	2.445 0.679	cu/m/hr/sq m l/sec/sq m	cubic meters per hour per square meter liters per second per square meter
gallons per square foot	gpsf	40.743	l/sq m	liters per square meter
horsepower	hp	0.746	kw	kilowatts
inch(es)	in.	2.54	cm	centimeter
inches per hour	in./hr	2.54	cm/hr	centimeters per hour
million gallons	mil gal.	3.785 3,785.0	Ml cu m	megaliters (liters x 10^6) cubic meters
million gallons per acre per day	mgad	0.039	cu m/hr/sq m	cubic meters per hour per square meter
million gallons per day	mgd	43.808 0.0438	l/sec cu m/sec	liters per second cubic meters per second
mile	mi	1.609	km	kilometer
parts per billion	ppb	0.001	mg/l	milligrams per liter
parts per million	ppm	1.0	mg/l	milligrams per liter
pound(s)	lb	0.454 453.6	kg g	kilogram grams
pounds per acre per day	lb/acre/day	0.112	g/day/sq m	grams per day per square meter
pounds per day per acre	lb/day/acre	1.121	kg/day/ha	kilograms per day per hectare
pounds per 1,000 cubic feet	lb/1,000 cf	16.077	g/cu m	grams per cubic meter
pounds per million gallons	lb/mil gal.	0.120	mg/l	milligrams per liter
pounds per cubic foot	pcf	16.02	kg/cu m	kilograms per cubic meter
pounds per square foot	psf	4.882×10^{-4}	kg/sq cm	kilograms per square centimeter
pounds per square inch	psi	0.0703	kg/sq cm	kilograms per square centimeter
square foot	sq ft	0.0929	sq m	square meter
square inch	sq in.	6.452	sq cm	square centimeter
square mile	sq mi	2.590	sq km	square kilometer
square yard	sq yd	0.836	sq m	square meter
standard cubic feet per minute	scfm	1.699	cu m/hr	cubic meters per hour
ton (short)	ton	907.2 0.907	kg metric ton	kilograms metric ton
yard	yd	0.914	m	meter

Section XVIII

LIST OF PUBLICATIONS

1. Lager, J.A. and Field, R. Counter Measures for Pollution from Overflows - The State of the Art. Presented at Water Pollution Control Federation 46th Annual Conference. Cleveland, Ohio. September 30-October 5, 1973.

2. Lager, J.A. Stormwater Treatment: Four Case Histories. Prepared for presentation at ASCE National Meeting on Water Resources Engineering. Los Angeles, California. January 21-25, 1974.

3. Smith, W.G. Application of a Simulation Model for Routing Storm Flows through Sewer Systems. Presented at Central States Water Pollution Control Association 46th Annual Conference. Rockton, Illinois. June 12-15, 1973.

TECHNICAL REPORT DATA
(Please read Instructions on the reverse before completing)

EPORT NO. EPA-670/2-74-040	2.	3. RECIPIENT'S ACCESSION NO.
TLE AND SUBTITLE RBAN STORMWATER MANAGEMENT AND TECHNOLOGY: n Assessment		5. REPORT DATE December 1974; Issuing Date 6. PERFORMING ORGANIZATION CODE
UTHOR(S) ohn A. Lager and William G. Smith		8. PERFORMING ORGANIZATION REPORT NO.
RFORMING ORGANIZATION NAME AND ADDRESS etcalf & Eddy, Inc. alo Alto, California 94303		10. PROGRAM ELEMENT NO. 1BB034/ROAP 21ASZ/Task 1 11. CONTRACT/GRANT NO. 68-03-0179
PONSORING AGENCY NAME AND ADDRESS ational Environmental Research Center ffice of Research and Development .S. Environmental Protection Agency incinnati, Ohio 45268		13. TYPE OF REPORT AND PERIOD COVERED Final 14. SPONSORING AGENCY CODE

SUPPLEMENTARY NOTES

BSTRACT

comprehensive investigation and assessment of promising, completed, nd ongoing urban stormwater projects, representative of the state-of-he-art in abatement theory and technology, has been accomplished. The esults, presented in textbook format, provide a compendium of project nformation on management and technology alternatives within a frame-ork of problem identification, evaluation procedures, and program ssessment and selection. Essentially every metropolitan area of the nited States has a stormwater problem, whether served by a combined ewer system (approximately 29 percent of the total sewered population) r a separate sewer system. However, the tools for reducing stormwater ollution, in the form of demonstrated processes and devices, do exist nd provide many-faceted approach techniques to individual situations. hese tools are constantly being increased in number and improved upon s a part of a continuing nationwide research and development effort. he most promising approaches to date involve the integrated use of ontrol and treatment systems with an areawide, multidisciplinary erspective.

KEY WORDS AND DOCUMENT ANALYSIS

DESCRIPTORS	b. IDENTIFIERS/OPEN ENDED TERMS	c. COSATI Field/Group
infection, Drainage, *Water pollu-n, *Waste treatment, *Sewage treat-t, *Surface water runoff, *Runoff, ste water, *Sewage, Contaminants, ter quality, Cost analysis, *Cost ectiveness, *Storage tanks, *Storm ers, *Overflows--sewers, *Combined ers, Hydrology, Hydraulics, *Mathe-ical models, Remote control	Drainage systems, Water pollution control, Biological treatment, Pollution abatement, *Storm runoff, *Water pollution sources, Water pollution effects, *Wastewater treatment, *Urban hydrology, *Com-bined sewer overflows, Physical processes, Physical-chemical treatment	8H 13B

ISTRIBUTION STATEMENT RELEASE TO PUBLIC	19. SECURITY CLASS *(This Report)* UNCLASSIFIED 20. SECURITY CLASS *(This page)* UNCLASSIFIED	21. NO. OF PAGES 471 22. PRICE

Form 2220-1 (9-73)

GOVERNMENT PRINTING OFFICE: 1975-657-590/5331 Region No. 5-11