EPA-453/R-93-050a

Pulp, Paper, and Paperboard Industry-Background Information for Proposed Air Emission Standards

Manufacturing Processes at Kraft, Sulfite, Soda, and Semi-Chemical Mills

Emission Standards Division

U.S. ENVIRONMENTAL PROTECTION AGENCY
Office of Air and Radiation
Office of Air Quality Planning and Standards
Research Triangle Park, North Carolina 27711

October 1993

U.S. Environmental Protection Agency
Region 5, Library (PL-12J)
77 West Jackson Boulevard, 12th Floor
Chicago, IL 60604-3590

This report has been reviewed by the Emission Standards Division of the Office of Air Quality Planning and Standards, EPA, and approved for publication. Mention of trade names or commercial products is not intended to constitute endorsement or recommendation for use. Copies of this report are available through the Library Services Office (MD-35), U.S. Environmental Protection Agency, Research Triangle Park NC 27711, (919) 541-2777, or from National Technical Information Services, 5285 Port Royal Road, Springfield VA 22161, (703) 487-4650.

ENVIRONMENTAL PROTECTION AGENCY

Background Information
and Draft
Environmental Impact Statement
for Pulp, Paper, and Paperboard Industry

Prepared by:

10/26/93
(Date)

Bruce C. Jordan
Director, Emission Standards Division
U. S. Environmental Protection Agency
Research Triangle Park, NC 27711

1. National emission standards for hazardous air pollutants (NESHAP) are being proposed for the pulp and paper industry under authority of Section 112(d) of the Clean Air Act as amended in 1990. The proposed NESHAP requires controls for hazardous air pollutant emissions from wood pulping and bleaching processes at pulp mills and integrated mills (i.e., mills that combine on-site production of both pulp and paper).

2. Copies of this document have been sent to the following Federal Departments: Labor, Health and Human Services, Defense, Transportation, Agriculture, Commerce, Interior, and Energy; the National Science Foundation; the Council on Environmental Quality; members of the State Territorial Air Pollution Program Administrators; the Association of Local Air Pollution Control Officials; EPA Regional Administrators; and other interested parties.

3. The comment period for review of this document is 90 days from the date of publication of the proposed standard in the Federal Register. Mr. Stephen Shedd may be contacted at (919) 541-5397 regarding the date of the comment period.

4. For additional information contact:

   Mr. Stephen Shedd
   Chemicals and Petroleum Branch
   U. S. Environmental Protection Agency
   Research Triangle Park, North Carolina 27711
   Telephone: (919) 541-5397

5. Copies of this document may be obtained from:

   U. S. EPA Library (MD-35)
   Research Triangle Park, North Carolina 27711
   Telephone: (919) 541-2777

   National Technical Information Service
   5285 Port Royal Road
   Springfield, Virginia 22161
   Telephone: (703) 487-4650

TABLE OF CONTENTS

Section		Page
1.0	INTRODUCTION	1-1
1.1	SCOPE OF THE BACKGROUND INFORMATION DOCUMENT	1-2
1.2	DOCUMENT ORGANIZATION	1-4
2.0	PROCESS DESCRIPTIONS AND EMISSIONS ESTIMATES	2-1
2.1	INDUSTRY CHARACTERIZATION	2-1
2.1.1	Pulp Production	2-1
2.1.2	Paper Production	2-3
2.2	PROCESSES AND THEIR EMISSION POINTS	2-5
2.2.1	The Pulping Process	2-5
2.2.2	The Bleaching Process	2-22
2.3	BASELINE EMISSIONS	2-30
2.3.1	Summary of Federal Regulations	2-31
2.3.2	Summary of State Regulations	2-31
2.3.3	Baseline Emission Controls	2-34
2.3.4	Baseline Emissions	2-38
2.4	REFERENCES	2-40
3.0	EMISSION CONTROL TECHNIQUES	3-1
3.1	INTRODUCTION	3-1
3.2	APPLICABLE CONTROL TECHNIQUES FOR VENTS	3-3
3.2.1	Vent Gas Collection and Transport System	3-6
3.2.2	Applicable Vent Control Devices	3-9
3.3	APPLICABLE CONTROL TECHNIQUES FOR WASTEWATER EMISSION POINTS	3-21
3.3.1	Wastewater Collection System	3-21
3.3.2	Steam Stripper with Vent Control	3-21
3.3.3	Air Stripper with Vent Control	3-26
3.4	REFERENCES	3-27
4.0	MODEL PROCESS UNITS, CONTROL OPTIONS, AND ENVIRONMENTAL IMPACTS	4-1
4.1	MODEL PROCESS UNITS	4-1
4.1.1	Pulping Model Process Units	4-2
4.1.2	Bleaching Model Process Units	4-6

TABLE OF CONTENTS (Continued)

Section		Page
	4.1.3 Use of Model Process Units in Estimating National Emissions	4-8
4.2	CONTROL OPTIONS	4-9
4.3	ENVIRONMENTAL IMPACTS	4-11
	4.3.1 Air Impacts	4-12
	4.3.2 Energy Impacts	4-17
	4.3.3 Water Impacts	4-20
	4.3.4 Other Impacts	4-20
4.4	REFERENCES	4-21
5.0	ESTIMATED CONTROL COSTS	5-1
5.1	CONTROL COSTS	5-1
	5.1.1 Enclosure Costs	5-3
	5.1.2 Ductwork and Conveyance Costs	5-4
	5.1.3 Thermal Incineration System Costs	5-7
	5.1.4 Scrubber System Costs	5-12
	5.1.5 Steam Stripping Costs	5-18
5.2	CONTROL OPTIONS COSTS	5-21
5.3	REFERENCES	5-34
6.0	DATABASE SYSTEM FOR ESTIMATING NATIONAL IMPACTS	6-1
6.1	DATA INPUTS	6-1
6.2	CALCULATION OF NATIONAL EMISSIONS AND CONTROL IMPACTS	6-3
6.3	GENERATION OF SUMMARY OUTPUT FILES	6-4
6.4	REFERENCES	6-5
APPENDIX A		A-1
APPENDIX B		B-1
APPENDIX C		C-1

LIST OF TABLES

Table		Page
2-1	DISTRIBUTION OF CHEMICAL AND SEMI-CHEMICAL PULP PROCESSES IN THE UNITED STATES	2-4
2-2	MAJOR HAZARDOUS AIR POLLUTANTS EMITTED FROM PROCESS POINTS	2-6
2-3	TYPICAL VENT AND WASTEWATER STREAM CHARACTERISTICS FOR KRAFT PULPING EMISSION POINTS	2-10
2-4	TYPICAL UNCONTROLLED EMISSION FACTORS FOR KRAFT PULPING FACILITIES	2-11
2-5	COMPARISON OF COMMON CHEMICALS USED IN PULP BLEACHING	2-23
2-6	MOST COMMON KRAFT BLEACH SEQUENCES	2-26
2-7	TYPICAL VENT AND WASTEWATER STREAM CHARACTERISTICS FOR KRAFT BLEACH PLANT EMISSION POINTS	2-27
2-8	SUMMARY OF TYPICAL UNCONTROLLED EMISSION FACTORS FOR KRAFT BLEACH PLANT FACILITIES	2-28
2-9	SUMMARY OF FEDERAL REGULATIONS (NSPS) FOR EMISSIONS FROM KRAFT PULPING FACILITIES	2-32
2-10	SUMMARY OF STATE REGULATIONS FOR EMISSIONS FROM PULPING FACILITIES	2-33
2-11	SUMMARY OF EXISTING TECHNIQUES TO CONTROL HAP EMISSIONS FROM PULPING VENT SOURCES	2-35
2-12	SUMMARY OF EXISTING TECHNIQUES TO CONTROL HAP EMISSIONS FROM BLEACH VENT SOURCES	2-36
2-13	SUMMARY OF ADD-ON CONTROL STATUS OF WASTEWATER EMISSION SOURCES	2-37
2-14	SUMMARY OF ESTIMATED NATIONAL BASELINE EMISSIONS FROM CHEMICAL AND SEMI-CHEMICAL PULPING AND BLEACHING OPERATIONS	2-39
3-1	PULPING PROCESS MODIFICATIONS AND BLEACHING PROCESS SUBSTITUTIONS	3-2
3-2	PERCENT OF KRAFT MILLS USING COMBUSTION CONTROL DEVICES	3-4

LIST OF TABLES (Continued)

Table		Page
3-3	TYPICAL VENT CHARACTERISTICS FOR KRAFT PULPING EMISSION POINTS	3-5
3-4	SCRUBBER REDUCTION ESTIMATES	3-20
3-5	STEAM STRIPPER REMOVAL EFFICIENCIES	3-25
4-1	PULPING PROCESS CHARACTERISTICS AFFECTING EMISSIONS	4-3
4-2	PULPING MODEL PROCESS UNITS	4-4
4-3	BLEACHING MODEL PROCESS UNITS	4-7
4-4	SELECTED CONTROL OPTIONS AND CONTROL TECHNOLOGY EFFICIENCY	4-10
4-5	UNCONTROLLED EMISSIONS FOR AN EXAMPLE FACILITY	4-13
4-6	PRIMARY AIR IMPACTS FOR AN EXAMPLE MILL	4-14
4-7	EXAMPLE MILL SECONDARY AIR POLLUTION IMPACTS	4-16
4-8	EXAMPLE MILL ENERGY IMPACTS	4-19
5-1	ELEMENTS INCLUDED IN CONTROL COST CALCULATIONS FOR VARIOUS POINTS/DEVICES	5-2
5-2	DUCTWORK GENERAL DESIGN SPECIFICATIONS FOR VENTING TO AN EXISTING COMBUSTION DEVICE	5-5
5-3	THERMAL INCINERATOR GENERAL DESIGN SPECIFICATIONS FOR HALOGENATED VENT STREAMS	5-8
5-4	DESIGN PARAMETERS FOR POST INCINERATION SCRUBBER SYSTEM	5-14
5-5	DESIGN PARAMETERS FOR STAND-ALONE SCRUBBER SYSTEM	5-16
5-6	STAINLESS STEEL COST FACTORS	5-22
5-7	SUMMARY OF COSTS FOR CONTROL OPTIONS FOR AN EXAMPLE FACILITY	5-23
5-8	COST FOR MODEL MILL PULPING VENTS NOT REQUIRING ENCLOSURES USING AN EXISTING COMBUSTION DEVICE	5-25

LIST OF TABLES (Continued)

Table | Page

5-9 COSTS FOR MODEL MILL PULPING VENTS REQUIRING ENCLOSURES (FUGITIVE SOURCES) USING AN EXISTING COMBUSTION DEVICE 5-26

5-10 COSTS FOR CONTROL OF MODEL MILL BLEACHING VENT STREAMS USING A STAND-ALONE SCRUBBER 5-27

5-11 COSTS FOR CONTROL OF MODEL MILL BLEACHING VENT STREAMS USING AN INCINERATOR FOLLOWED BY A SCRUBBER 5-28

5-12 COST FOR CONTROL OF MODEL MILL PULPING WASTEWATER STREAMS USING A STEAM STRIPPER 5-30

5-13 COMPARISON OF TOTAL CAPITAL INVESTMENT (TCI) AND TOTAL ANNUAL COST (TAC) FOR MODEL MILLS WITH VARYING CAPACITIES 5-33

LIST OF FIGURES

Figure		Page
1-1	Segment of pulp and paper industry discussed in this document	1-3
2-1	Percentage of wood pulp produced by each process	2-2
2-2	Breakdown of emission points in typical kraft pulping and bleaching processes	2-7
2-3	Typical kraft process with chemical recovery practices	2-9
2-4	Typical sulfite pulping process practicing chemical recovery	2-18
2-5	Typical neutral sulfite semi-chemical pulping process	2-20
2-6	Typical down-flow bleach tower and washer	2-24
3-1	Discrete burner, thermal incinerator	3-14
3-2	Packed tower absorption process	3-18
3-3	Continuous integrated steam stripper system	3-23
4-1	Example air pollution impacts	4-18
6-1	National impacts estimation process	6-2

1.0 INTRODUCTION

National emission standards for hazardous air pollutants (NESHAP) are under development for the pulp and paper industry under authority of Section 112(d) of the Clean Air Act as amended in 1990. This background information document (BID) provides technical information and analyses used in the development of the proposed pulp and paper NESHAP. Effluent guidelines limitations for pulp and paper mills are being developed concurrently under the Clean Water Act. The U. S. Environmental Protection Agency (EPA) is coordinating these efforts to produce integrated decision-making for the air and water regulations for the pulp and paper industry. Technical information used for the development of effluent guidelines limitations is in separate documents. However, this BID does include air emission impact factors for the process technology options considered for establishing effluent guidelines limitations.

The EPA has conducted a number of public meetings to review and discuss the technical approach to developing these joint air and water regulations. An April 1994 preliminary draft of this document was reviewed by the public. All of the comments received on the preliminary draft, in addition to information provided at the public meetings, were reviewed and considered in revising this document. Comments and corrections were incorporated into the BID to ensure that the BID is technically accurate and describes the Agency's documented conclusions about the control technologies, emission factors, control costs, and other impacts upon which the proposed rule is based. Comments and data received that modify the proposal analyses were considered and evaluated to

determine the impact on proposal, but they were not incorporated into the proposal's analyses or this document. The EPA will continue to evaluate those comments and data, along with other public comments received on the proposed rule, and all comments will be considered in the development of the final NESHAP.

1.1 SCOPE OF THE BACKGROUND INFORMATION DOCUMENT

The scope of this document covers wood pulping and bleaching processes at pulp mills and integrated mills (mills that combine on-site production of both pulp and paper). Such mills would typically fall under standard industrial classification codes 2611 and 2621, respectively. Figure 1-1 provides an overview of the pulp and paper industry and identifies the segment of the industry discussed in this document. Detailed information about the production of paper (at integrated or non-integrated mills) is not included in this document. The secondary fibers segment of the industry, which consists of mills that manufacture pulp from recycled paper products, is also not included.

The pulping process is designed to separate the cellulose fibers in the wood chips. Pulp mills and integrated mills use a variety of methods to pulp wood. The three main types of pulping processes are chemical, semi-chemical, and mechanical. Chemical pulping is the most common of the three pulping processes. Chemical and semi-chemical pulping processes are the focus of this BID. Mechanical pulping processes are not included.

As shown in Figure 1-1, chemical and semi-chemical pulping processes are divided into two groups: process operations and chemical recovery. Air emissions from process operations are discussed in detail in this BID; emissions from the chemical recovery process will be evaluated at a later date in separate documents. The process operations covered in this BID include the pulping of wood chips, evaporation of weak spent cooking liquor, and pulp bleaching. Chemical recovery operations (not included in this document) include

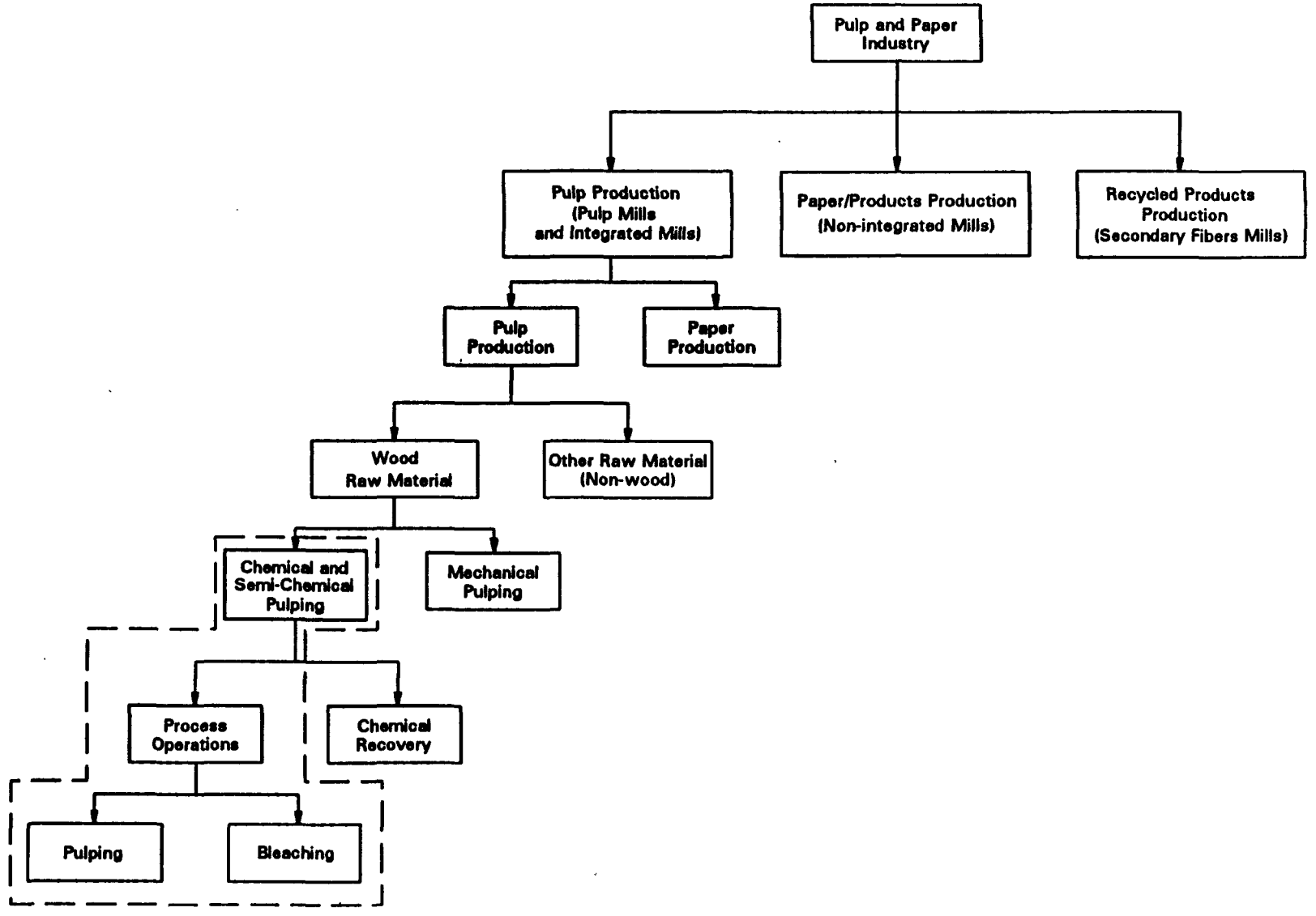

Note: Activities within the dashed lines are discussed in this document.

712B097R

Figure 1-1. Segment of Pulp and Paper Industry Discussed in This Document.

the equipment used to recover the cooking chemicals from the strong spent cooking liquor.

The purpose of this BID is to document the Agency's conclusions about hazardous air pollutant (HAP) emissions from this industry, the demonstrated technologies available to control HAP emissions, and the costs and other impacts of applying these technologies. Regulatory alternatives and the national environmental and cost impacts will be presented in other EPA documents.

1.2 DOCUMENT ORGANIZATION

Chapter 2.0 presents an overview of the pulp and paper industry, including process descriptions, air emission points, and estimated national baseline emissions. Control technologies are discussed in Chapter 3.0. The model process units that were developed to estimate the regulatory impacts on the industry are discussed in Chapter 4.0, along with options for controlling HAP emissions from pulping and bleaching vents and wastewater streams. Example environmental impacts are also shown in Chapter 4.0. Costs for controlling HAP emissions from the various emission points in the pulp and paper industry are discussed in Chapter 5.0. Chapter 6.0 gives a brief overview of the data base developed to estimate national environmental and cost impacts for the pulp and paper industry discussed above. The appendices include Field Test Data (Appendix A), Air Emission Estimates and Emission Factors Development (Appendix B), and Model Process Units (Appendix C).

2.0 PROCESS DESCRIPTIONS AND EMISSIONS ESTIMATES

This chapter presents an overview of the pulp and paper industry, focusing on the chemical pulping and bleaching processes used in the industry. Section 2.1 describes the character and distribution of pulp and paper mills in the United States; Section 2.2 discusses unit processes and their emission points; and Section 2.3 describes baseline emissions and control technologies.

2.1 INDUSTRY CHARACTERIZATION

The pulp and paper industry includes facilities that manufacture pulp, paper, or other products from pulp. Converting operations such as the production of paperboard products (e.g., containers and boxes) and coating or laminating are not included in the pulp and paper industry.

Based on responses to a 1992 EPA Office of Water survey (which are considered Confidential Business Information),[1] there are 565 operating pulp and paper facilities in the United States. Many of these pulp and paper facilities operate more than one type of pulping process; for example, they may produce pulps using a chemical (e.g., kraft or sulfite) process and a mechanical or semi-chemical process. Based on this survey, there are 253 wood pulping processes (chemical, semi-chemical, and mechanical) operating in the industry.

2.1.1 Pulp Production

Although other raw materials can be used, the material most commonly used in the manufacture of pulp is wood. Based on 1992 estimates, approximately 71.8 million tons of wood pulp are produced annually in the United States.[1] Figure 2-1 illustrates the percentage of wood pulp produced in the United States by each pulping process and the approximate number of

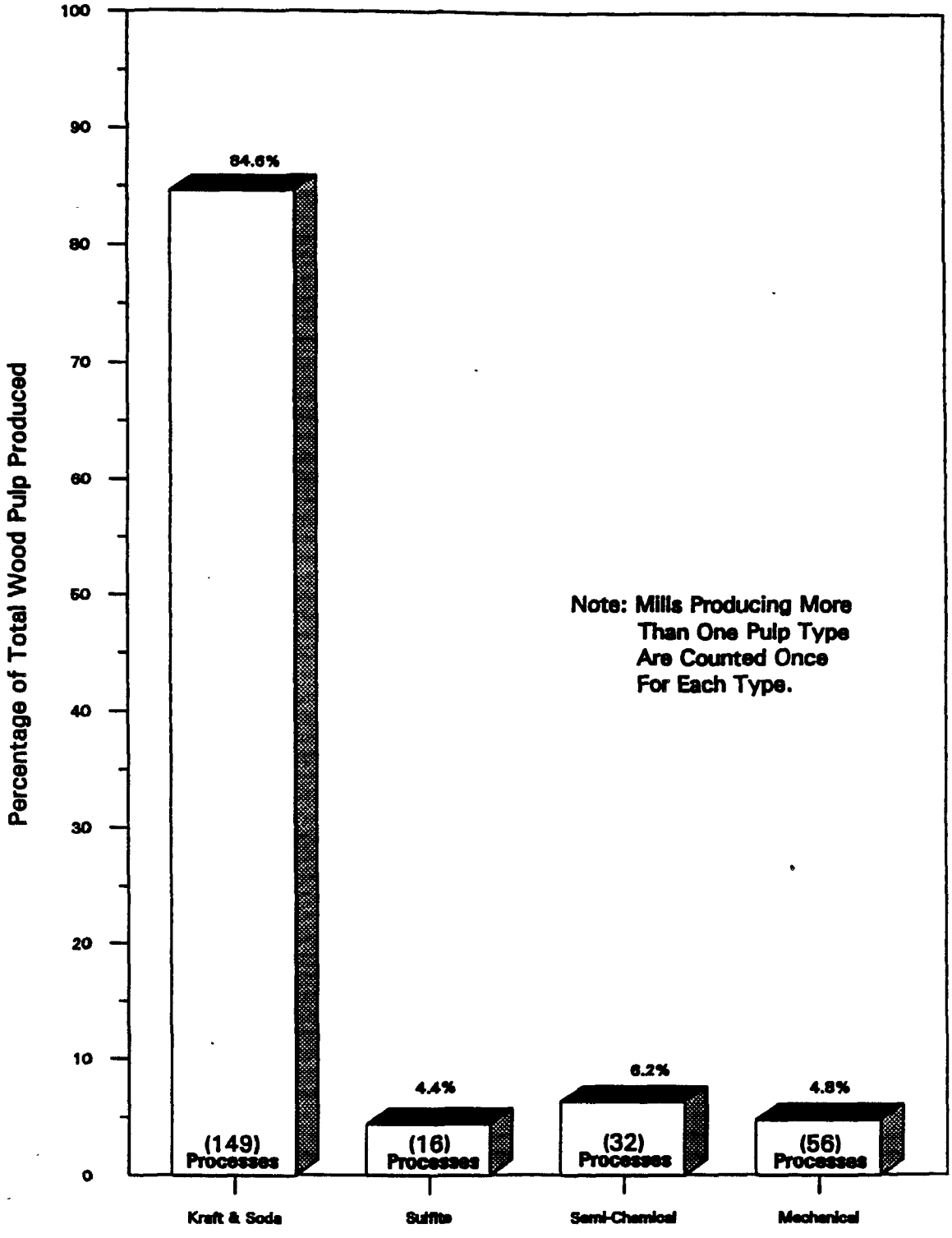

Figure 2-1. Percentage of Wood Pulp Produced by Each Process

7128098R

mills of each type. The pulping processes discussed in this document (kraft, soda, sulfite, and semi-chemical) account for approximately 68.4 million tons or 95 percent of total U.S. wood pulp production and are present at 161 mills that are being considered for the NESHAP supported by this document. Table 2-1 shows the distribution of the 565 mills in each State by type of chemical or semi-chemical pulping process used.[2] The States with the highest concentration of chemical pulp mills are Washington, Alabama, and Georgia.

Kraft (including soda) pulp production accounts for approximately 85 percent of U.S. wood pulp production.[1,3] There are approximately 149 kraft pulping processes,[1] located primarily in the southeastern United States. This region provides over 60 percent of the wood pulp in the United States.[3]

Figure 2-1 also shows that there are currently 16 sulfite pulping processes in the United States, which contribute approximately 4 percent of total U.S. wood pulp production.[1] The majority of sulfite mills are located in the north and northwest, where the softwood species used in sulfite pulping (spruce, hemlock, and fir) are more prevalent. However, sulfite pulp can also be produced using hardwoods such as poplar and eucalyptus.[4]

Approximately 32 pulping processes in the United States use semi-chemical pulping, which contributes approximately 6 percent of nationwide wood pulp production.[1,3] There is no geographic concentration of mills employing semi-chemical pulping technology because the technology can use a wide variety of wood species and, thus, is not restricted to a given region of the country.

2.1.2 Paper Production

According to the 1991 Lockwood-Post's Directory for Pulp, Paper and Allied Trades, approximately 38.7 million short tons of paper were produced in the United States in 1991.[5] Based on responses to the 1992 EPA Office of Water survey,

TABLE 2-1. DISTRIBUTION OF CHEMICAL AND SEMI-CHEMICAL PULP PROCESSES IN THE UNITED STATES[a,b]

State	Kraft/soda	Sulfite	Semi-chemical
Alabama	16		2
Alaska		2	
Arizona	2		
Arkansas	7		
California	3		
Florida	11	1	
Georgia	13		1
Idaho	1		
Indiana			1
Iowa			1
Kentucky	2		1
Louisiana	11		3
Maine	8	1	
Maryland	1		
Michigan	3		3
Minnesota	3		
Mississippi	5		
Montana	2		
New Hampshire	2		1
New York	1	1	2
North Carolina	7		1
Ohio	1		2
Oklahoma	1		1
Oregon	7		3
Pennsylvania	4	1	
South Carolina	6		1
Tennessee	3		1
Texas	8		
Virginia	5		3
Washington	12	5	3
Wisconsin	4	5	2
Total	149	16	32

a Based on Reference 2.
b Mills producing more than one pulp process are counted once for each pulp process.

integrated mills accounted for 25 percent of production, non-integrated mills for approximately 10 percent,[1] and secondary fiber mills for approximately 65 percent.[1]

2.2 PROCESSES AND THEIR EMISSION POINTS

This section provides a detailed discussion of process emission points for chemical and semi-chemical mills pulping wood, as well as the specific HAP's emitted from these points. Industry review of the emission factors presented in this section suggests that further testing be conducted to supplement existing data. Industry has provided some emissions data and is currently testing several pulp mills. These and any additional test data provided to the EPA will be considered for review and for incorporation into the final regulatory analysis.

A list of HAP's associated with process emission points is given in Table 2-2. As discussed in Chapter 1.0, the scope of this document is limited to points referred to as process operation points. Included in this group of points are the digester system, the knotter, the washer system, the evaporator system (in the chemical recovery area), coproduct recovery, and the bleaching process. Figure 2-2 provides a flow diagram of a typical kraft pulping operation and depicts process operations and chemical recovery points. Chemical recovery air emission points (other than the evaporator system) will be discussed in future documents.

The pulp production can be divided into two steps: the pulping process and the bleaching process. The exact processes used for pulping and bleaching depend on the end use of the pulp.

2.2.1 The Pulping Process

The pulping processes discussed in this document are kraft, sulfite, semi-chemical, and soda. Detailed documentation of the differences between the kraft and soda, sulfite, and semi-chemical pulping processes was provided by the industry. These differences are being considered in the

TABLE 2-2. MAJOR HAZARDOUS AIR POLLUTANTS EMITTED FROM PROCESS POINTS

Chemical name
1,4-Dichlorobenzene
2,4,5-Trichlorophenol
2-Butanone (MEK)
Acetaldehyde
Acetophenone
Acrolein
Carbon disulfide
Carbon tetrachloride
Chlorine
Chloroform
Formaldehyde
Hexane
Hydrochloric Acid
Methanol
Methyl chloroform
Methylene chloride
Propionaldehyde
Toluene

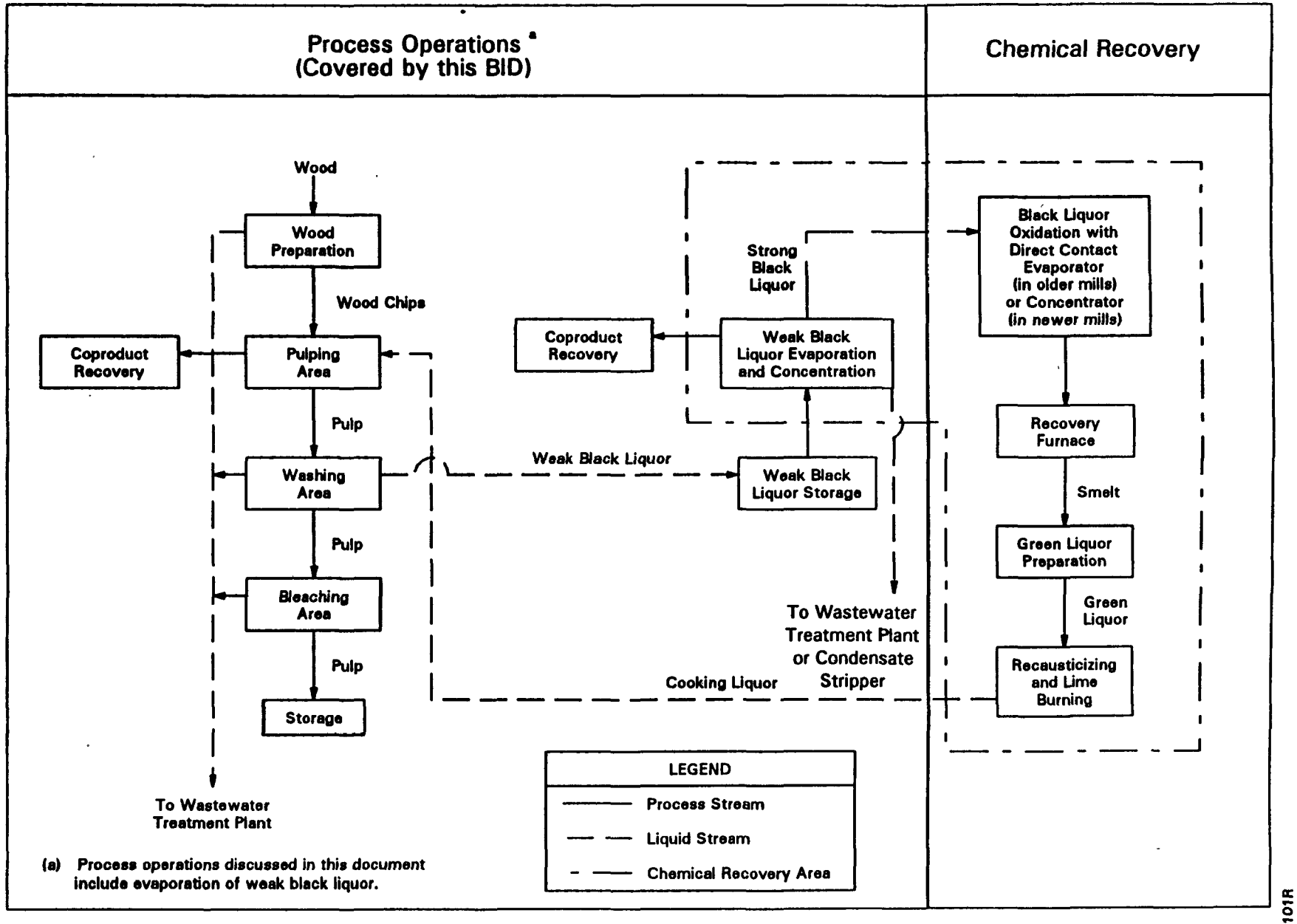

Figure 2-2. Breakdown of Emission Points in Typical Kraft Pulping and Bleaching Processes

7228101R

rule; however, they are not included specifically in this document.

The remainder of this section discusses these three pulping processes and their emission points. Despite their differences, all three pulping processes begin with the preparation of wood into wood chips. Wood chips are sent through a digestion process to chemically reduce the chips into a pulp. The pulp then goes through several steps where knots and oversize particles and spent chemicals from the digestion process are removed from the pulp. Some pulping processes, such as kraft, recover the spent chemicals for reuse in the pulping process. The remainder of this section discusses these three pulping processes and their emission points.

2.2.1.1 The Kraft Process. Figure 2-3 presents a typical kraft pulping process, with the emission points identified. Table 2-3 presents the vent and wastewater stream characteristics and the HAP emission characteristics, for the emission points shown in Figure 2-3.[1,3,6,7] Table 2-4 presents emission factors for these points. Emission factor ranges are given in Table 2-4 for the various emission points. Table 2-4 provides only a summary of the emission factors developed and shown in Appendix B. In most cases, the emission factors presented in Table 2-4 are of the same order of magnitude as those supplied by industry in June 1993 (NCASI technical bulletin 650).

The key components of the kraft pulping process, as shown in Figure 2-3, are digestion, deknotting, brownstock washing, screening, chemical recovery, and coproduct recovery. The kraft pulping process involves cooking wood chips in a white liquor solution of sodium hydroxide and sodium sulfide. This cooking or digestion process breaks down the wood structure by dissolving the lignin that holds the wood fibers together. The digestion process produces unbleached pulp (brownstock) and weak black liquor, which is a solution of solubilized lignin, water, hydrolysis salts, and sulphonation products.[8]

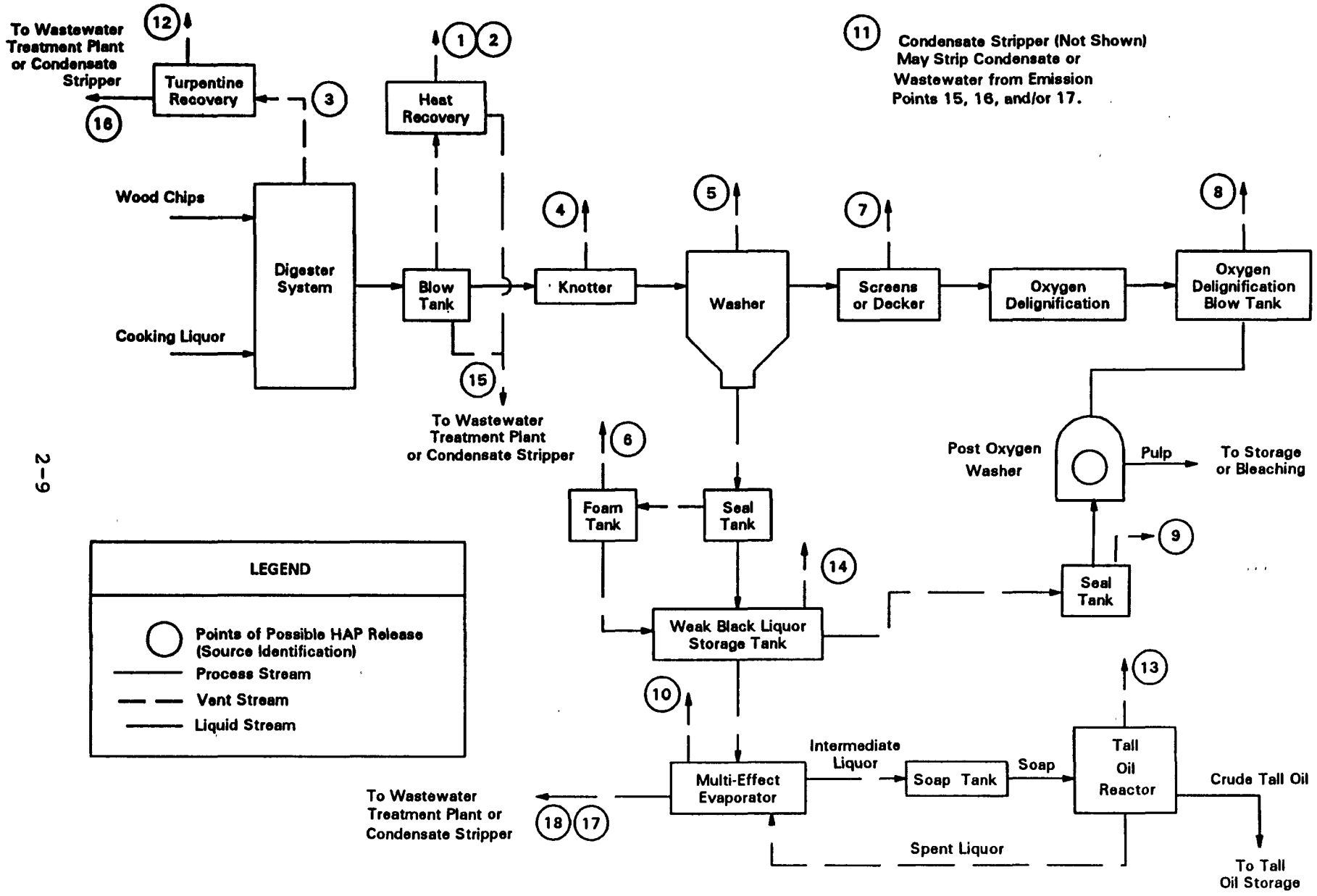

Figure 2-3. Typical Kraft Process with Chemical Recovery Practices

7228116R

TABLE 2-3. TYPICAL VENT AND WASTEWATER STREAM CHARACTERISTICS FOR KRAFT PULPING EMISSION POINTS

Emission point	Emission point ID	Emission point	Minimum capacity[a] (ADT/day)	Maximum capacity[a] (ADT/day)	Average capacity[a] (ADT/day)	Flow rate[b] (scmm/Mg pulp/day)	Temp.[b] (°C)	Moisture content[b] (%)	Heat content[d] (Kj/scm)
Vent	1	Batch digester blow gas	94	1800	720	1.3	82.5	30-99	70
	2	Continuous digester blow gas	94	1800	720	0.026	112.5	35-70	6
	3	Digester relief gas	94	1800	720	0.0026	42.5	3-20	18,400
	4	Knotter hood (vibratory screens)	94	1800	720	0.9	30	NA[c]	20
	5	Washer	65	1625	650	0.9	32.5	2-10	40
	6	Washer seal and foam tank	65	1625	650	0.18	65	15-35	20
	7	Decker/screen	65	1625	720	0.9	NA	NA	0.2
	8	Oxygen delignification blow tank	498	1300	930	0.026	NA	NA	150
	9	Oxygen delignification washer and seal tank	498	1300	930	0.18	NA	NA	50
	10	Evaporator/hotwell	65	1625	650	0.0027	112.5	50-90	21,300
	11	Condensate stripper	94	1800	720	0.0027	112.5	NA	NA
	12	Turpentine condenser	94	1800	720	0.00257	42.5	NA	18,800
	13	Tall oil reactor	65	1625	720	0.000069-0.00763	40	NA	210
	14	Weak black liquor/storage tank	65	1625	650	0.00274	NA	NA	2,000
Wastewater	15	Digester blow condensates	94	1800	720	0.69-1.4	40	NA	NA
	16	Turpentine decanter underflow	94	1800	720	0.11	40	NA	NA
	17	Evaporator condensates	65	1625	650	4.2-4.9	40	NA	NA

a Capacities are from Reference 3. ADT/day = Air dried short tons/day.
b Based on References 1, 3, and 7. Flow rates are reported at standard conditions of dry gas (21.1°C and 760 mm Hg).
c NA = Not available at this time.
d The heat content is the heating value released by the organics in the vent stream. Turpentine concentrations vary based on wood type and could increase these estimated values.

TABLE 2-4. TYPICAL UNCONTROLLED EMISSION FACTORS FOR KRAFT PULPING FACILITIES[a,b]

Emission source	Emission point ID	Emission point	Emission factor range (Kg/Mg pulp)				
			Total HAP[c]	Total VOC[c]	Methanol	Acetone	TRS
Vent	1	Batch digester blow gas	0.1	2.4-4.4	0.0062-0.091	0.0015	2.37-4.02
	2	Continuous digester blow gas	0.00035-0.00039	4-4.9	0.00024-0.0003	0.00004-0.0002	2.4-4.0
	3	Digester relief gas	0.004	2.6-2.7	0.003	0.00006	2.6-2.7
	4	Knotter hood (vibratory screens)	0.1-0.6	0.8-2.6	0.02-0.03	0.005-0.007	NA[d]
	5	Washer	0.026-0.35	1.8-3.4	0.0022-0.15	0.0005-0.033	1.4-2.1
	6	Washer seal and foam tank	0.2	1.6-5.8	0.18-0.19	0.01-0.04	0.22
	7	Decker/screen	0.003-0.005	0.01-0.023	0.002-0.003	0.005-0.007	NA
	8	Oxygen delignification blow tank	0.019-0.050	0.14	0.05-0.005	0.001	NA
	9	Oxygen delignification washer and seal tank	0.24	0.41	0.076	0.073	NA
	10	Evaporator/hotwell	0.002-0.02	3.1-5.4	0.0014-0.02	0.000007-0.002	3.5
	11	Condensate stripper	NA	NA	NA	NA	NA
	12	Turpentine condenser	0.004	4.1	0.003	0.0001	2.7
	13	Tall oil reactor	NA	0.006	NA	NA	0.10
	14	Weak black liquor storage tank	0.043-0.15	0.069-0.15	0.043-0.1	0.0005-0.01	NA
Wastewater	15	Digester blow condensates	0.10-0.62	0.34-1.20	0.1-0.59	0.0012-0.0043	0.33
	16	Turpentine decanter underflow	0.51	0.97	0.5	0.004	0.07
	17	Evaporator condensates	0.17-3.04	0.17-3.04	0.15-3.0	0.0039-0.01	0.52
	18	Evaporator surface condenser condensates	0.039-0.63	0.11-0.71	0.031-0.62	0.0025-0.001	0.26

[a] Capacities are shown on Table 2-3.
[b] Specific emission factors for these and other compounds are given in Appendix B. These ranges represent the variability of the emission factors associated with the model plants given in Appendix C.
[c] Total HAP and VOC emission factors are based on the sum of individual HAP and VOC emission factors.
[d] NA = Not available at this time.

The pulp and spent chemical slurry from the digester pass through a knotter, which removes oversize or undigested wood. The spent chemicals are then removed from the pulp in the washing process and are recovered for reuse in the chemical recovery process. The pulp is then screened to remove additional oversize wood particles and excess water is removed in the decker. In some processes, the pulp undergoes oxygen delignification to remove additional lignin prior to storage or bleaching. The following sections describe digestion, deknotting, brownstock washing, oxygen delignification, evaporation, and coproduct recovery.

2.2.1.1.1 Digester system. The digester system, which may be a batch or continuous process, is one of the key components in the pulping process and generally comprises a digester and blow tank or similar vessel. After cooking is completed in the digester, the weak black liquor and pulp are discharged into a low-pressure vessel typically called a blow tank. Heat recovery from the blow tank gases is often part of the blow tank system.

Blow gases may be vented to an accumulator or a vapor sphere for collection. Based on the total reduced sulfur (TRS) and terpene concentrations of the blow gas emissions, the gases may then be incinerated, stripped, or condensed for the recovery of turpentine. (The processes for recovering coproducts from digestion are discussed in Section 2.2.1.1.6) The pulp from the blow tank may then enter a defibering or deknotting stage prior to pulp washing to produce a higher-quality chemical pulp.

Because digester blow gas emissions differ between batch and continuous digesters, two emission point identifiers are shown in Figure 2-3 for digester blow gases (emission point ID's 1 and 2). Specifically, the batch digester releases gases in surges when the digester blows its entire load into a blow tank; continuous digester emissions are released at a constant rate. Thus, overall volumes of gases from continuous digesters are less than those from batch digesters. High-

pressure gases from the blow tank are typically sent to a primary condenser and then to an accumulator. The accumulator discharges foul condensate and blow gas. Vapors from the blow tank are recovered and condensed to recover some of the organic compounds.

Digester relief gases are also a point of potential emissions (emission point ID 3). However, as shown in Figure 2-3, relief gases from the pulping of softwoods can be condensed and retained to recover turpentine (see Section 2.2.1.1.6).[7]

A wide variety of volatile organic compounds (VOC) and reduced sulfur compound emissions are produced by the digestion process. In addition to HAP emissions from process vents, the wastewater produced by the digestion process (digester blow condensates, turpentine decanter underflows, and evaporator condensates) is a point of HAP emissions (predominantly methanol, as shown in Table 2-4, [emission point ID's 15, 16, 17, and 18]).

2.2.1.1.2 Deknotting process. The next step in the kraft process is often deknotting, as shown in Figure 2-3. Knots are large pieces of fiber bundles or wood that were not fully broken down during digestion. They are generally defined as the fraction of pulp that is retained (as wood chips or fiber bundles) on a 3/8-inch perforated plate.[9] Knots are removed from the pulp prior to washing and are either discarded as waste, burned, or returned to the digester for further digestion.

Two types of knotters are in current use. One type, an older design, is the open-top vibratory screen. The vibratory screen, which releases emissions directly to the atmosphere, is being phased out because of the large quantity of foam generated, which lowers the efficiency of the brownstock washer.[10] Emission factors for vibratory screen knotters are shown in Table 2-4.

The second type of knotter consists of a totally enclosed, pressurized, cylindrical, perforated screen. A

rotating foil in this type of knotter produces a series of vacuum and pressure pulses, which keeps the perforations clean and reduces foam buildup. Lower emissions are associated with this second type of knotter because it is an enclosed system.

2.2.1.1.3 Brownstock washing. Pulp from the blow tank and knotter is washed with water in a process commonly called brownstock washing, as shown in Figure 2-3. The purpose of washing is to remove weak black liquor from the pulp to recover sodium and sulfur and to avoid contamination during subsequent processing steps. The most common type of washer used in the industry is the rotary vacuum washer. Other types of washers include diffusion washers, rotary pressure washers, horizontal belt washers, wash press, and dilution/extraction.

Washers differ according to the method used to separate black liquor from brownstock pulp. All washers require the addition of water (fresh or recycled) to rinse the pulp and recover the black liquor. The rinsed pulp is screened for oversize particles and thickened in a decker (emission point ID 7), where excess water is removed prior to oxygen delignification, bleaching, or storage. The diluted or "weak" black liquor is recovered in filtrate tanks and sent to the chemical recovery process.

A foam tank is typically used to capture the foam separated in the filtrate tanks. Foam is formed when soap, which is dissolved by the caustic cooking liquors, goes through the washing process. If foam remains with the pulp, it can saponify and form "pellets" on wood that are extremely hard to disperse in the washing process, thereby reducing the washing efficiency.[11] Generally, defoaming is completed in the foam tank using centrifugal or mechanical force to break up the foamed mass. This force allows air trapped in the foam mass to vent to the atmosphere, as shown in Figure 2-3 and Tables 2-3 and 2-4 (emission point ID 6). The defoamed weak black liquor is typically piped to the chemical recovery process.

Emissions occur from the washing process as HAP compounds entrained in the pulp and black liquor slurry volatilize. The typical vent and stream characteristics and HAP emission characteristics of the brownstock washer are summarized in Tables 2-3 and 2-4, respectively (emission point ID 5). As with the digestion process, the quantity and type of emissions from a brownstock washer are a function of the pulp production, type of digestion (batch or continuous), and the type of wood pulped (softwood or hardwood), and also the point of shower water. Vent streams from washers are considerably lower in temperature and in moisture content than digester streams. The heat content of the brownstock washer vent varies with the type of enclosure used on the washer.

Washers such as the rotary vacuum drum washer are typically hooded and, therefore, not fully enclosed. These washers require large volumes of air to capture and vent moisture and fugitive emissions and, consequently, will have a dilute HAP concentration (and thus a lower heat content). Washers such as the diffusion washer or horizontal belt washer are enclosed or have limited exposure to ambient air. Vent streams from these washers, therefore, will have lower flow rates with higher HAP concentrations.

2.2.1.1.4 Oxygen delignification stage. Treatment of pulp with oxygen is used in some cases as a delignification step prior to bleaching; however, it may also be used for bleaching in alkaline conditions. Oxygen delignification, when used as a step prior to bleaching with chlorine chemicals, can help reduce bleach plant chemical use by removing more of the lignin from the pulp. In addition, the oxygen delignification stage effluent is compatible with the kraft chemical recovery process.[12] Because the resulting effluent can be recycled to the chemical recovery system, organic loading in the bleach plant wastewater is reduced.[12] Vent stream characteristics and HAP emission factors for the oxygen delignification stage are presented in Tables 2-3 and 2-4, respectively.

2.2.1.1.5 Chemical recovery. An essential element in the kraft pulp process is the recovery of sodium and sulfur from the weak black liquor recovered from brownstock washing and oxygen delignification processes, as shown in Figure 2-3. The general steps in the recovery of cooking chemicals (as shown in Figure 2-2) are evaporation or concentration, black liquor oxidation (optional), combustion/oxidation/reduction (recovery furnace), and recausticizing and calcining. This section only discusses evaporation; the remaining chemical recovery processes will be discussed in future documents.

For efficient chemical recovery of the inorganic chemicals, the evaporation of excess water is required. Large amounts of water (5 to 7 kilograms of water per kilogram of dry solids) are evaporated to achieve a desired black liquor solids concentration of 60 to 65 percent.[13] The water is typically removed from the spent cooking liquor in multiple-effect evaporators, which comprise a series of direct or indirect contact evaporators operated at different pressures so that the vapor from one evaporator body becomes the steam supply to the next evaporator.

Hazardous air pollutants are emitted from the evaporation process by two basic mechanisms. Non-condensible gases containing HAP's that have been vaporized during the process of concentrating the cooking liquor are emitted from the evaporator vents and hotwells. Hazardous air pollutant emissions also occur from the evaporator condensate streams because of the partitioning of certain compounds to the air from the liquid phase. These points are depicted in Figure 2-3 and Tables 2-3 and 2-4 (emission point ID's 10, 17, and 18).

2.2.1.1.6 Coproduct recovery. The kraft pulping process produces two saleable coproducts: turpentine and soap (tall oil). Turpentine is recovered from digester relief gases (as shown in Figure 2-3) when resinous softwoods such as pine are pulped. Generally, the digester relief gases are vented to a condenser to reduce the gas moisture content and to a cyclone separator to remove any small wood chips or fines. The

turpentine and water removed by the condenser are separated in a decanter. The turpentine, which is lighter than water, overflows from the decanter to a storage tank. The water removed from the decanter bottom overflow is combined with other process condensates for treatment. During the decanting process, HAP's are emitted through vents. As shown in Table 2-4 (emission point ID 16), methanol is emitted from the turpentine decanter at a level similar to that from a decker or screen.

Tall oil can also be recovered from the kraft pulping process. Tall oils are also found in resinous softwoods and are recovered from the evaporation process using a tall oil reactor, as shown in Figure 2-3. Significant HAP emissions are not expected from this step because it occurs after the weak black liquor has been stripped of volatiles in the evaporation process. Table 2-4 provides emission factors for this point (emission point ID 13).

2.2.1.1.7 Condensate steam stripping. Condensates from the digester and evaporator, as well as from turpentine recovery, are often combined and steam-stripped to remove VOC from the waste streams and to reduce odors. The VOC-laden steam is then typically sent to an existing combustion device, such as the power boiler, to take advantage of the heat content and to destroy the VOC. Table 2-3 provides vent characteristics for condensate steam stripping (emission point ID 11). Emission factor data for the condensate stripper vent are not available at this time.

2.2.1.2 The Sulfite Process. Figure 2-4 presents a typical sulfite process diagram. The sulfite process follows the same basic steps as the kraft system with the exception of coproduct recovery, which is not typically practiced in the sulfite pulping process. As in the kraft process, wood chips are transferred to a continuous or batch digester and cooked with cooking liquor. However, the sulfite process chemically pulps wood using sulfur dioxide absorbed in an acidic solution. Typical bases include calcium, magnesium, ammonium,

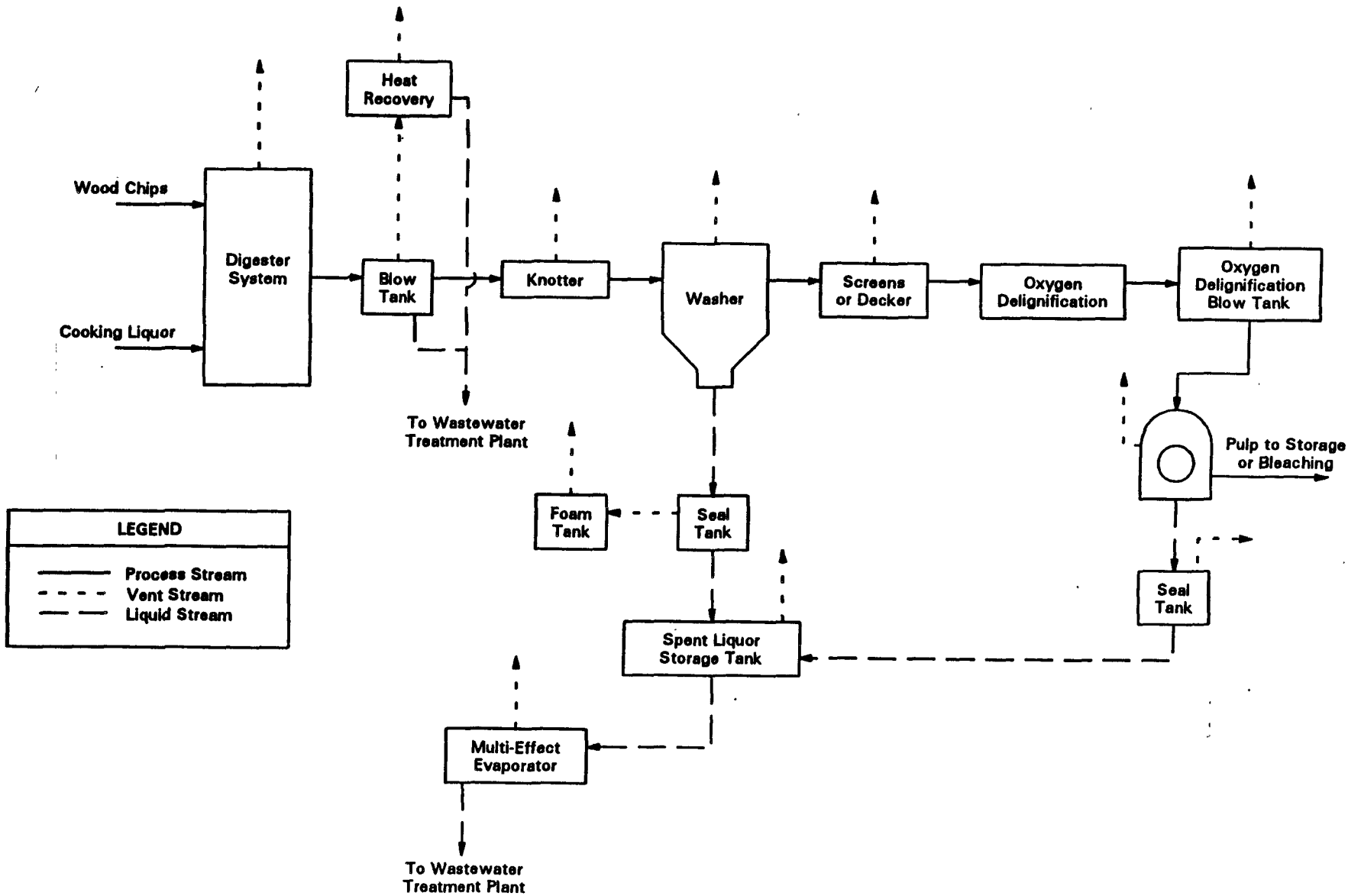

Figure 2-4. Typical Sulfite Pulping Process Practicing Chemical Recovery

7228117R

or sodium. As shown in Figure 2-4, after digestion, oversize particles are removed in the deknotting process and the pulp is washed to remove the spent chemicals, screened to remove oversize particles, and thickened to remove excess water. The chemicals removed in the washing process may then be recovered for reuse.

Spent cooking liquor removed from the washing process may be collected and recovered. In addition, chemicals can be recovered from gaseous streams (i.e., red stock washers). The cost of all the soluble bases (with the exception of calcium) makes chemical recovery economically feasible, which is also attractive because of the pollution control achieved. Chemical recovery is not practiced with the calcium-based sulfite process because recovery is not cost-effective.

The general steps of sulfite chemical recovery vary with the type of base being recovered. However, the process begins with evaporation, as discussed in Section 2.2.1.1.5. Because this BID only focuses on process operation points, the sulfite recovery process is not discussed in further detail. Appendix C includes HAP emission factors and vent and wastewater stream characteristics for the sulfite process. For a description of the deknotting and washing processes, refer to Sections 2.2.1.1.2 and 2.2.1.1.3.

2.2.1.3 <u>The Semi-Chemical Process</u>. The semi-chemical pulping process is a combination of the chemical pulping process and the mechanical pulping process and was developed to produce high-yield chemical pulps.[14] Figure 2-5 presents a typical semi-chemical process. The semi-chemical process follows steps similar to the kraft or sulfite processes discussed in Sections 2.2.1.1 and 2.2.1.2, namely, digestion and washing.

In the semi-chemical process, wood chips are partially digested with cooking chemicals to weaken the bonds between the lignin and the wood. Oversize particles are removed from the softened wood chips, then the chips are mechanically reduced to pulp by grinding them in a refiner, as in the

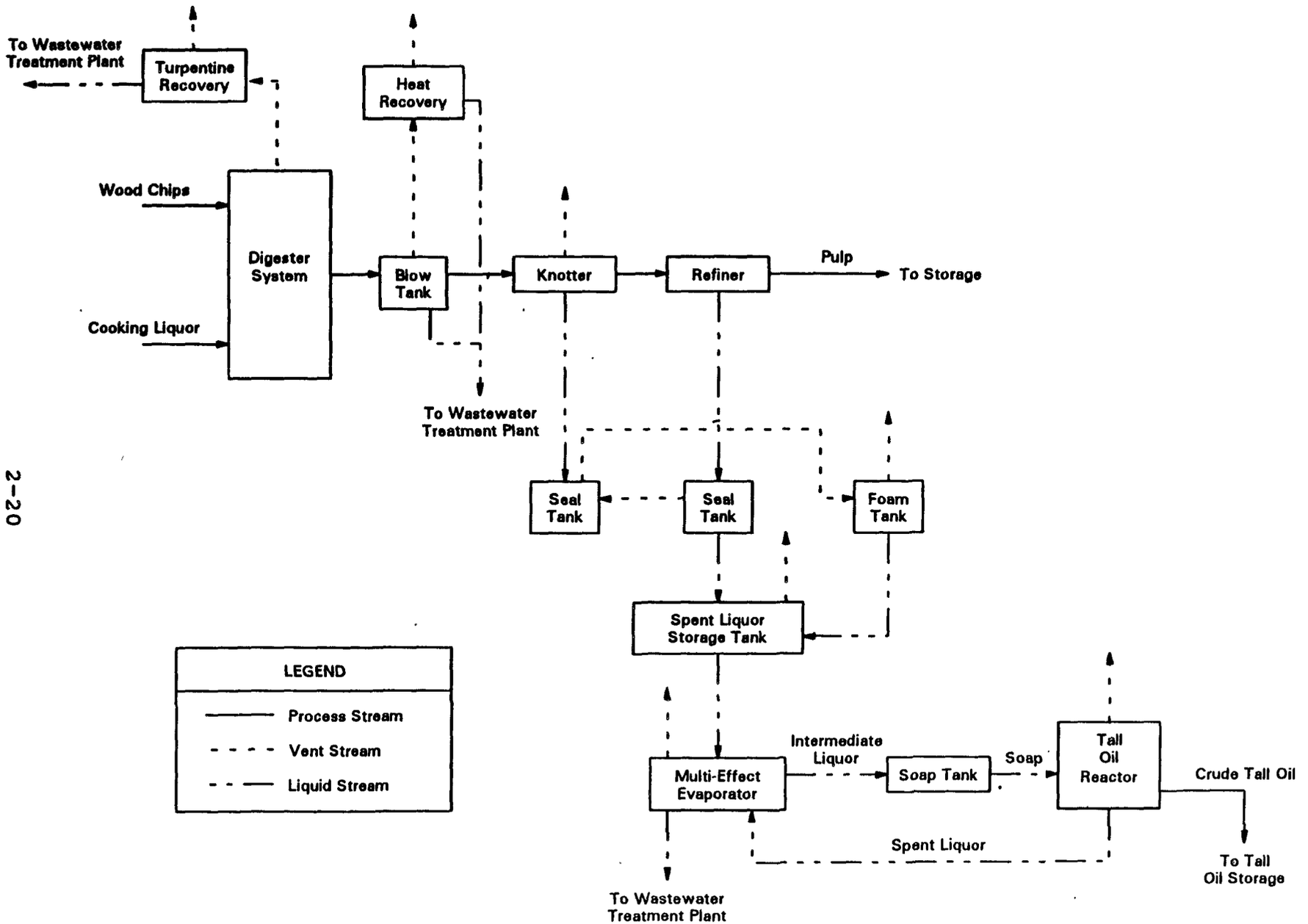

Figure 2-5. Typical Neutral Sulfite Semi-Chemical Pulping Process

7228118R

mechanical pulping process. The pulp is then sent to storage. Based on a voluntary industry survey, there are no semi-chemical mills that practice chemical recovery. However, some mills combine spent liquor from on-site semi-chemical process with spent liquor from an adjacent kraft process for chemical recovery.

There are two main types of semi-chemical pulping: neutral sulfite semi-chemical (NSSC) and neutral sulfite chemimechanical (NSCM). The most common semi-chemical process is the NSSC process.[15]

The only major difference between semi-chemical and kraft/sulfite pulping processes is that the semi-chemical digestion process is shorter and only partially delignifies wood chips. As with the kraft/sulfite pulping processes, HAP emission rates from the semi-chemical process are dependent on pulp production, wood type, and the chemicals used to weaken the bonds in the wood. Appendix C includes HAP emission factors and vent and wastewater stream characteristics for the semi-chemical process.

2.2.1.4 The Soda Process. The soda pulping process is essentially identical to the kraft pulping process, except that the chemicals used in the cooking process are predominantly sodium hydroxide. A small amount of sodium sulfide is added to the sodium hydroxide to maintain greater pulp strength and yield.[16] Kraft digestion and washing processes are discussed in Sections 2.2.1.1.1 and 2.2.1.1.3, respectively. Chemicals removed in the washing process are collected and recovered. Similar to the kraft process, the soda chemical recovery process begins with evaporation, as discussed in Section 2.2.1.1.5. As previously discussed, this BID only focuses on process operation points; therefore, the soda recovery process is not discussed in further detail.

Data for vent and stream characteristics and emission factors for the soda process are not available. Because little sulfur is added in the cooking liquor, sulfur compound

emissions will be small. However, organic emissions will be similar to those from the kraft process.

2.2.2 The Bleaching Process

The purpose of the bleaching process is to enhance the physical and optical qualities (whiteness and brightness) of the pulp. Two approaches are used in the chemical bleaching of pulps. One approach, called brightening, uses selective chemicals, such as hydrogen peroxide, that destroy chromatographic groups but do not materially attack the lignin. Brightening produces a product with a temporary brightness (such as newspaper). The other approach (true bleaching) seeks to almost totally remove residual lignin by adding oxidizing chemicals to the pulp in varying combinations of sequences, depending on the end use of the product. To produce a high-quality, stable paper pulp (such as for bond paper), bleaching methods that delignify the pulp must be used.

The most common bleaching and brightening agents are chlorine, chlorine dioxide, hydrogen peroxide, oxygen, caustic (sodium hydroxide), and sodium hypochlorite.[17] Two less common compounds presently used in the industry are ozone and hydrosulfite. Concern over chlorinated compounds such as dioxins, furans, and chloroform have prompted the pulp and paper industry to shift away from the application of chlorine and hypochlorite and toward the use of other bleaching chemicals such as chlorine dioxide in the bleaching process. Table 2-5 provides a summary of the basic functions of each of these bleaching chemicals.

Typically, the pulp is treated with each chemical in a separate stage, as shown in Figure 2-6. Each stage includes a tower, where the bleaching occurs; a washer, which removes bleaching chemicals and dissolved lignins from the pulp prior to entering the next stage; and a seal tank, which collects the washer effluent to be used as wash water in other stages or to be sewered. Bleaching processes use various combinations of chemical stages called bleaching sequences.

TABLE 2-5. COMPARISON OF COMMON CHEMICALS USED IN PULP BLEACHING

Bleaching compounds	Bleaching notation	Function
Chlorine	C	Oxidize and chlorinate lignin.
Caustic (sodium hydroxide)	E	Hydrolyze chlorolignin and solubilize lignin.
Hypochlorite	H	Oxidize and solubilize lignin.
Chlorine dioxide	D	Oxidize and solubilize lignin. In amounts with Cl_2 protects against degradation of pulp.
Oxygen	O	Oxidize and solubilize lignin.
Hydrogen peroxide	P	Oxidize and solubilize lignin in chemical and high-yield pulps.
Ozone	Z	Oxidize and solubilize lignin.
Hydrosulfite	S or Y	Reduce and decolorize lignin in high-yield pulps.

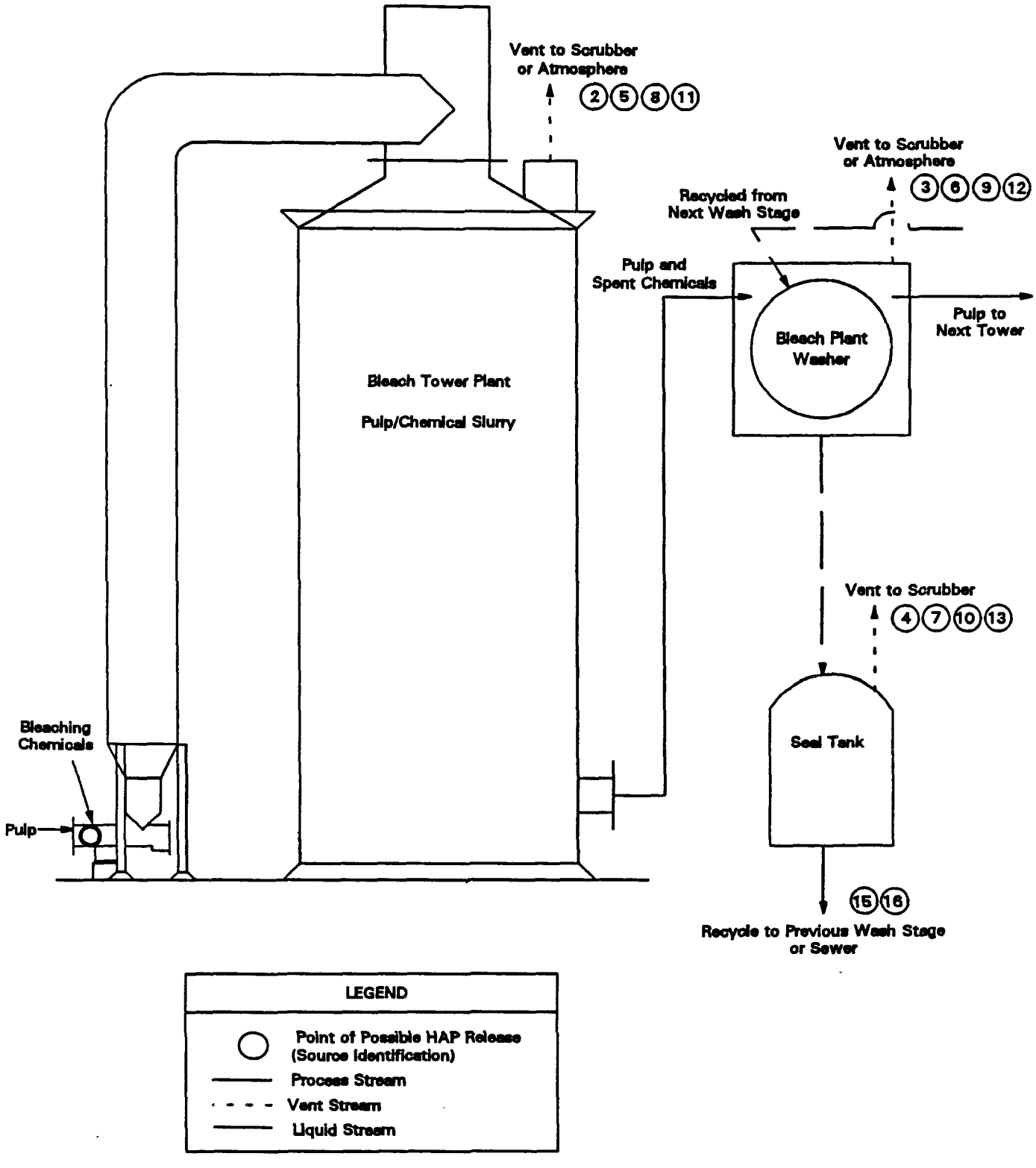

5015978R

Figure 2-6. Typical Down-flow Bleach Tower and Washer

Table 2-6 presents the most common sequences used in kraft bleaching.

Sections 2.2.2.1 through 2.2.2.6 present information on typical bleach stages. Tables 2-7 and 2-8 provide the typical vent and wastewater stream characteristics for bleaching kraft pulps, and HAP emission factors, respectively. Some of the identified HAP's emitted by bleaching vents include chlorine, chloroform, and methanol. The wastewater from bleach plants typically contains chloroform and methanol. In most cases, the emission factors presented in Table 2-8 are of the same order of magnitude as those supplied by industry in June 1993 (NCASI technical bulletin 650).

2.2.2.1 Chlorination Stage (C-Stage). The first stage in the bleaching process is typically chlorination. The primary function of the chlorination stage is to further delignify the pulp.[18] The pulp is generally pumped into a tower or stage similar to the one shown in Figure 2-6. During this process, chlorine reacts with lignin to form compounds that are water-soluble or soluble in an alkaline medium, which aids in delignifying the pulp before it proceeds to the next bleaching stage or stages.[18]

During bleaching, side reactions produce chloroform, phenol, chlorinated phenolics, and other chlorinated organics. These byproduct emissions, as well as unreacted chlorine, may be vented from the chlorination stage tower, the washer, and the seal tank. Tables 2-7 and 2-8 provide emissions data for these points.

2.2.2.2. Extraction Stage (E-Stage). The next stage after chlorination is typically the extraction stage. This stage and the remaining stages serve to bleach and whiten the delignified pulp. The extraction stage removes the chlorinated and oxidized lignin by solubilization in a caustic solution. After the extraction stage, the pulp is washed to remove the excess chemicals and solubilized lignin. The largest amount of unwanted lignin is removed in these first two stages (chlorination and extraction).[17] A portion of the

TABLE 2-6. MOST COMMON KRAFT BLEACH SEQUENCES[a]

Bleach sequences[b]	Number of mills with bleach sequence
C-E-H	4
C-E-HE-D	3
C-EO-HE-H-DE	3
CD-E-D-E-D	4
CD-E-H-D	3
CD-E-HE-D-E-D	3
CD-EO-D	9
CD-EO-H-D	3
CD-EOP-D	3
DC-EOP-D	4
DCD-EOP-D	6

[a] Bleaching sequences performed at three or more mills are listed. Approximately 90 other sequences are used at one or two mills for each sequence.

[b] Key:

C	=	Chlorination
E	=	Extraction
D	=	Chlorine dioxide
H	=	Hypochlorite
O	=	Oxygen
P	=	Peroxide
CD	=	Chlorine dioxide substitution
EO	=	Oxygen added to extraction stage
EOP	=	Peroxide and oxygen added to extraction stage

TABLE 2-7. TYPICAL VENT AND WASTEWATER STREAM CHARACTERISTICS FOR KRAFT BLEACH PLANT EMISSION POINTS

Emission source	Emission point	Minimum capacity[a] (ADT/day)	Maximum capacity[a] (ADT/day)	Average capacity[a] (ADT/day)	Flow rate[b] (scmm/Mg pulp/day)	Temp.[b] (°C)	Moisture content[b] (%)	Heat content[d] (Kj/scm)
Vent	C-stage tower	90	1500	600	0.024	60	NA[c]	20
	C-stage washer	90	1500	600	0.362	60	NA	6
	C-stage seal tank	90	1500	600	0.014	60	NA	1900
	E-stage tower	90	1500	600	0.024	60	NA	30
	E-stage washer	90	1500	600	0.362	60	NA	10
	E-stage seal tank	90	1500	600	0.014	60	NA	230
	D-stage tower	90	1500	600	0.024	60	NA	0.2
	D-stage washer	90	1500	600	0.362	60	NA	0.2
	D-stage seal tank	90	1500	600	0.014	60	NA	0.02
	H-stage tower	90	1500	600	0.024	60	NA	0.1
	H-stage washer	90	1500	600	0.362	60	NA	20
	H stage seal tank	90	1500	600	0.014	60	NA	5
Wastewater	Acid sewer (C,D, and H-stage filtrate)	90	1500	600	NA	--	--	--
	Caustic sewer (E-stage filtrate)	90	1500	600	NA	--	--	--

[a] Capacities are from References 1 and 3. ADT/day = Air dried short tons/day.
[b] Based on Reference 8. Flowrates are reported at standard conditions of dry gas (21.1°C and 760 mm Hg).
[c] NA = Not available at this time.
[d] The heat content is the heat released based on compounds in the vent stream (reference 6) and is at standard dry conditions.

TABLE 2-8. SUMMARY OF TYPICAL UNCONTROLLED EMISSION FACTORS FOR KRAFT BLEACH PLANT FACILITIES

		Emission factor range[a] (Kg/Mg pulp)				
Emission source	Emission point[b]	Total HAP[c]	Total VOC[c]	Chloroform	Chlorine	Methanol
Vent	C-stage tower	0.054-0.252	0.008-0.041	0.0009-0.01	0.05-0.21	0.00062-0.029
	C-stage washer	0.062-0.647	0.012-0.439	0.0009-0.0113	0.05-0.21	0.009-0.415
	C-stage seal tank	0.0084-0.323	0.007-0.32	5.5×10^{-5} - 7.2×10^{-4}	0.00127-0.0053	0.0067-0.311
	E-stage tower	0.013-0.026	0.011-0.026	0.0014-0.01	0-0.003	0.0027-0.0054
	E-stage washer	0.031-0.168	0.044-0.091	0.0014-0.01	0-0.003	0.0035-0.078
	E-stage seal tank	0.013-0.101	0.023-0.161	0.00009-0.0005	0-0.000076	0.0026-0.029
	D-stage tower	0.011-0.036	0.00004-0.018	0.00003-0.02	0.01	0.0000007-0.0002
	D-stage washer	0.01-0.06	0.0001-0.042	0.00003-0.02	0.01	0.00001-0.003
	D-stage seal tank	0.0005-0.02	0.00006-0.02	0.000003-0.001	0.0003	0.000008-0.002
	H-stage tower	0.088-0.62	0.056-0.119	0.04-0.05	0.01	0.00049-0.0063
	H-stage washer	0.15	0.15	0.04	0.01	0.091
	H stage seal tank	0.074	0.076	0.003	0.0003	0.068
Wastewater	Acid sewer (C,D, and H-stage filtrate)	0.12-0.52	0.12-0.53	0.0008-0.005	0	0.05-0.5
	Caustic sewer (E-stage filtrate)	0.042-0.32	0.04-0.32	0.0002-0.0023	0	0.03-0.3

[a] Specific emission factors for these and other compounds are given in Appendix B. These ranges represent the variability of the emission factors associated with the model plants given in Appendix C.

[b] Key: C-stage = Chlorination
E-stage = Extraction
D-stage = Chlorine dioxide
H-stage = Hypochlorite

[c] Total HAP and VOC emission factors are based on the sum of individual HAP and VOC emission factors.

filtrate from these stages may be reused and the remaining filtrate sewered to prevent precipitation of the solubilized chlorolignin compounds.[19] Emission factors for total HAP, chloroform, methanol, and chlorine released from the extraction stage tower, washer, and seal tank are shown in Table 2-8.

2.2.2.3 Chlorine Dioxide Stage (D-Stage) and Substitution Stage (C/D-Stage). Chlorine dioxide is often used in bleaching, either in the chlorination stage (as a substitute for some of the chlorine usage - chlorine dioxide substitution) or as an additional chlorine dioxide stage. The chlorine dioxide stage is similar to the chlorination stage and has similar emission points. Chlorine dioxide has 2.63 times greater oxidizing power (on a pound-per-pound basis) than chlorine and is used for nearly all high-brightness pulps.[20]

Chlorine dioxide has a high selectivity in destroying lignin without degradation of cellulose or hemicellulose. When chorine dioxide is added before chlorine less chlorinated organics are released into the effluent. Consequently, using the additional chlorine dioxide step has improved the delignification of the pulp and effluent characteristics.[21]

Chlorine dioxide is typically generated on site as a gas from the reaction of sodium chlorate in an acidic solution.[22] Tables 2-7 and 2-8 provide vent and wastewater stream characteristics and emission factor data for the chlorine dioxide stage components.

2.2.2.4 Hypochlorite Stage (H-Stage). Another common bleaching stage is hypochlorite. Hypochlorite is a true bleaching agent that destroys certain chromophoric groups of lignin; however, it also attacks the cellulose to some extent. High cellulose degradation occurs in kraft pulp, so the application of hypochlorite to kraft pulp is usually used only as an intermediate stage of the sequence or to produce semi-bleached pulps. Hypochlorite can also be used as an effective bleaching agent for sulfite pulps. However, the hypochlorite

stage has been identified as one of the most significant points of chloroform emissions.[23] Studies conducted by NCASI show that bleaching sequences without hypochlorite have lower chloroform emissions.[23] Vent and wastewater stream characteristics and HAP emission factors for the hypochlorite stage are given in Tables 2-7 and 2-8, respectively.

2.2.2.5 Ozone Bleaching Stage (Z-Stage). Ozone bleaching is effective for further delignification as well as bleaching and brightening. Ozone bleaching does not result in the formation or emission of chlorinated organic compounds such as chloroform.[24] Currently there is only one full-scale ozone bleaching line operating in the United States, and HAP emissions from this process have not been measured.

2.2.2.6 Peroxide Stage (P-Stage). Another potential bleaching stage is the peroxide stage. Peroxides, generally hydrogen peroxide, are effective lignin-preserving bleaching agents. Peroxides are frequently used as bleaching agents in the first extraction stage or in later stages of the bleaching process. Peroxides increase brightness without significant losses in the yield strength of highly lignified pulps and generate fewer chlorinated organic emissions. Emissions from this stage have not been measured.

2.3 BASELINE EMISSIONS

This section presents national baseline emission estimates for the process operation points in the pulp and paper industry. These emission estimates were developed based on the uncontrolled emission factors presented in this chapter, adjusted to account for the baseline level of control in place on these points. Baseline control levels were determined through a review of applicable State and Federal regulations and from information provided by many facilities regarding their current level of control. Sections 2.3.1 and 2.3.2 summarize Federal and State regulations, respectively, for the pulp and paper industry. Section 2.3.3 summarizes baseline controls assumed to be in place because of these

regulations. Section 2.3.4 presents national estimates of baseline emissions.

2.3.1 Summary of Federal Regulations

The EPA has developed new source performance standards (NSPS) for kraft pulp mills.[25] The NSPS established two emission limits for TRS compounds from points that include digester systems, multiple-effect evaporator systems, brownstock washers, and condensate strippers. Table 2-9 summarizes the Federal regulations for these process operation emission points and provides the maximum emission rates on a concentration basis.

Although these regulations do not specifically address HAP's from the pulping process, facilities with new processes affected by this rule are achieving the required TRS limits through the collection and combustion of vent gases, and are thereby reducing organic HAP emissions from these vents by at least 98 percent.

2.3.2 Summary of State Regulations

In addition to the NSPS, which applies to new and modified sources, many States have adopted similar limits for existing sources. State regulations pertaining specifically to process operation emission points are summarized in Table 2-10. Over 60 percent of the facilities in the United States are in States with current pulp and paper regulations. In determining baseline levels of control, it was assumed that facilities in States with TRS emission limits on digester systems, evaporators, brownstock washers, and condensate strippers are controlling these points through combustion, and facilities in States with bleach plant chlorine and chlorine dioxide limits are scrubbing the vents from these stages. Industry has commented that some States reported in Table 2-10 may have additional control. This information was used as a secondary determination of control if no information was provided through industry survey responses.[26]

In addition to the regulations summarized in Table 2-10, North Carolina, Tennessee, Maryland, and Michigan have passed

TABLE 2-9. SUMMARY OF FEDERAL REGULATIONS (NSPS) FOR EMISSIONS FROM KRAFT PULPING FACILITIES[a]

Process unit	Emission limits[b]	Method of control
Kraft digester system	5 ppm of TRS[c]	Lime kiln, recovery furnace, or combustion at a minimum of 1200 °F for 0.5 sec
Kraft brownstock washer system	5 ppm of TRS[c,d]	Lime kiln, recovery furnace, or combustion at a minimum of 1200 °F for 0.5 sec
Multiple-effect evaporator system	5 ppm of TRS[c]	Lime kiln, recovery furnace, or combustion at a minimum of 1200 °F for 0.5 sec
Condensate stripper system	5 ppm of TRSy[c]	Lime kiln, recovery furnace, or combustion at a minimum of 1200 °F for 0.5 sec
New, modified, or reconstructed kraft digester system	5 ppm of TRS[c]	Lime kiln, recovery furnace, or combustion at a minimum of 1200 °F for 0.5 sec

[a] New Source Performance Standards, 40 CFR 60, Subpart BB.
[b] Key: TRS = Total Reduced Sulfur
ppm = parts per million (by volume, dry basis)

[c] Corrected to 10 percent oxygen.
[d] Standard does not apply to facilities where implementation has been demonstrated to be technically or economically unfeasible.

TABLE 2-10. SUMMARY OF STATE REGULATIONS FOR EMISSIONS FROM PULPING FACILITIES

Process unit	Emission limits[a]	States regulating	Method of control
Kraft digester system	5 ppm of TRS	ME, VA	Combustion
		SC, GA, FL	Incineration
		ID, IN, CA, MS, LA	Not specified
	1.2 lb TRS/ton ADP	AL	Incineration
Kraft digester system/multiple-effect evaporators	0.6 lb TRS/ton ADP	MD	Not specified
	20 ppm of TRS	PA	Not specified
Kraft multiple-effect evaporators	5 ppm of TRS	VA, ME	Combustion
		FL, SC, GA	Incineration
		MS, TN, LA, CA	Not specified
	1.2 lb TRS/ton ADP	AL	Not specified
Kraft brownstock washer	5 ppm of TRS	ME[b]	Combustion
		CA	Not specified
Kraft condensate stripper	5 ppm of TRS	VA, ME	Combustion
		CA, LA	Not specified
		SC	Incineration
Bleach plant	3 lb/hr of Cl_2	ME	Not specified
	0.2 lb/hr of Cl_2	GA	Not specified
	3 lb/hr of ClO_2	ME	Not specified
	0.1 lb of ClO_2	GA	Not specified
Tall oil plant	0.5 lb TRS/ton oil	FL	Incineration
Sulfite mills	9.1 kg TRS/ton ADP	NH	Not specified
Effluent ponds	50 ppm H_2S	MT	Not specified

[a] Key:
TRS = Total Reduced Sulfur
ppm = parts per million
ADP = Air-Dried Pulp
Cl_2 = Chlorine
ClO_2 = Chlorine dioxide
H_2S = Hydrogen sulfide

[b] After January 1994.

regulations that limit toxic air pollutant emissions. These regulations limit the maximum ambient air concentrations of toxic air pollutants surrounding the pulping facilities, as determined by dispersion modeling. Although these regulations do not specifically limit HAP emissions from the pulping process, to compliance with these ambient air concentration limits achieves some HAP emission reduction. Some of the additional controls reported by facilities and incorporated into the baseline control evaluation were likely put into place to comply with these toxic air pollutant regulations.

2.3.3 Baseline Emission Controls

Summaries of existing control techniques used for pulping and bleaching vent points are presented in Tables 2-11 and 2-12, respectively. As shown in Table 2-11, emissions from nearly all kraft and sulfite digester blow and relief gases are being controlled, as are those from some of the semi-chemical digesters. In addition, turpentine decanter vents, evaporator noncondensibles, and evaporator hotwell vents are being controlled at most kraft and some sulfite mills. Much smaller percentages of washers, deckers, and knotters at kraft mills are being controlled. However, washers are being controlled at almost half of all sulfite mills. As shown in Table 2-12, scrubbing of bleach plant vents ranges from approximately 30 percent of individual extraction stage vents to approximately 90 percent of first stage chlorine dioxide vents. Combustion devices and gas absorbers (scrubbers) are discussed in Chapter 3.0.

Table 2-13 summarizes the extent to which wastewater from pulping unit processes is pretreated prior to discharge to the wastewater treatment system. Condensates from approximately 25 percent of kraft mill turpentine recovery units and evaporator systems are pretreated with air or steam stripping. A smaller percentage of the digester blow tank condensates in kraft, sulfite, and semi-chemical mills are pretreated as well. Steam strippers and air strippers are discussed in Chapter 3.0.

TABLE 2-11. SUMMARY OF EXISTING TECHNIQUES TO CONTROL HAP EMISSIONS FROM PULPING VENT SOURCES[a]

Vent emission source	Percent controlled in industry[b]		
	Kraft	Sulfite	Semi-chemical
Batch relief gas	97	100	0
Continuous relief gas	95	0	33
Batch blow gas	91	92	0
Continuous blow gas	88	0	25
Turpentine decanter vent	73	0	NA[c]
Evaporator (hotwell noncondensibles)	88	55	NA[c]
Washer screens	5	0	0
Washer filtrate tanks	11	57	0
Washer hood vent	6	38	0
Deckers	9	0	0
Knotters	8	0	NA[c]

a Data taken from Reference 3.
b Sources are assumed to be controlled with at least 98 percent destruction efficiency for VOC and organic HAP.
c For this analysis, only one semi-chemical mill was known to practice chemical recovery and none were known to practice turpentine recovery or bleaching.

TABLE 2. SUMMARY OF EXISTING TECHNIQUES TO CONTROL HAP EMISSIONS FROM BLEACH VENT SOURCES

Stage	Emission points controlled	Bleach lines controlling at baseline[a] (%)	Assumed Control efficiency[b] (%)
Chlorination	Tower	69	99% Cl and HCl
	Washer	69	
	Seal tank	62	
First extraction	Tower	28	99% Cl and HCl
	Washer	34	
	Seal tank	51	
Hypochlorite	Tower	18	99% Cl and HCl
	Washer	26	
	Seal tank	41	
First chlorine dioxide	Tower	95	99% Cl and HCl
	Washer	79	
	Seal tank	92	
Second extraction	Tower	32	99% Cl and HCl
	Washer	41	
	Seal tank	59	
Second chlorine dioxide	Tower	76	99% Cl and HCl
	Washer	57	
	Seal tank	76	

[a] Percent controlled at baseline for individual bleach stages. However, when the level of control is evaluated on a sequence basis, 15 percent of facilities have all equipment controlled.

[b] Control applied is a scrubber.

TABLE 2-13. SUMMARY OF ADD-ON CONTROL STATUS OF WASTEWATER EMISSION SOURCES[a]

Wastewater emission source	Percent of unit processes controlled		
	Kraft	Sulfite	Semi-Chemical
Digester blow condensates	12	3	3
Turpentine decanter underflow	22	0	NA[b]
"Foul" evaporator condensates	26	0	NA[b]
"Clean" evaporator condensates	0	0	NA[b]
Bleach plant wastewater	0	0	NA[b]

[a] Data taken from References 1 and 3.
[b] For this analysis, only one semi-chemical mill was known to practice chemical recovery and none were known to practice turpentine recovery or bleaching.

2.3.4 Baseline Emissions

Baseline emissions are essentially uncontrolled emissions adjusted for the effects of current State and Federal regulations, as well as additional controls known to be currently in place. Estimated baseline emissions from process operation points in the pulp and paper industry are summarized in Table 2-14. Estimates for baseline emissions of total HAP, total VOC, TRS, and 15 major HAP and VOC contributors are presented in Table 2-14. As shown in the table, methanol is the largest constituent contributing to total HAP and total VOC emissions for the included emission points.

Descriptions of the process used to estimate including national emissions using estimation process, the models and database developed for this purpose are given in Chapter 4.0 and Chapter 6.0, respectively. The estimated baseline emissions are based on emission factors (Appendix C), mill-specific data (e.g., pulp/bleach production), Federal/State regulations (Tables 2-11 and 2-12), and capture efficiency and emission reduction efficiency of the control devices (Chapter 3.0).

TABLE 2-14. SUMMARY OF ESTIMATED NATIONAL BASELINE EMISSIONS FROM CHEMICAL AND SEMI-CHEMICAL PULPING AND BLEACHING OPERATIONS[a]

Major Pollutants	Emissions (Mg/yr)
Total HAP	170,000
Total VOC	830,000
Total reduced sulfur	350,000
Methanol	120,000
Hexane	18,000
Toluene	14,000
Methyl ethyl ketone	6,000
Chloroform	3,300
Chlorine	2,800
Formaldehyde	2,100
Acetaldehyde	2,000
Methylene chloride	1,200
Propionaldehyde	700
Acrolein	700
Acetophenone	60
Hydrochloric acid	59
Methyl chloroform	22
Carbon disulfide	8

[a] Based on process operation emission points only (chemical recovery sources other than evaporation are not included).

2.4 REFERENCES

1. Responses to the 1990 U.S. EPA National Census of Pulp, Paper, and Paperboard Manufacturing Facilities Section 308 Questionnaire and supplements (Confidential Business Information). 1992.

2. Memorandum from Wendy Rovansek, Radian Corporation, to Pulp and Paper Project Team. Pulp and Paper Mill Math II. June 29, 1993.

3. 1991 Lockwood-Post's Directory of the Pulp, Paper, and Allied Trades. San Francisco, Miller Freeman Publications. 1990. p. 9.

4. Smook, G.A. Handbook for Pulp & Paper Technologists. Atlanta, GA, TAPPI and Montreal, Quebec, Canada, Canadian Pulp and Paper Association. 1987. p. 39.

5. Ref. 4, p. 2.

6. Memorandum from Greene, D.B. Radian Corporation, to Shedd, S.A., EPA/CPB. Heat Release Factors. September 30, 1993.

7. Environmental Pollution Control, Pulp and Paper Industry, Part I, Air. U. S. Environmental Protection Agency, Technology Transfer. Publication No. EPA-625/7-76-001. October 1976. p. 1-4, and pp. 2-10 through 2-11.

8. Ref. 5, p. 67.

9. Ref. 5, p. 89.

10. Ref. 5, p. 91.

11. McDonald, R.G. and J.N. Franklin, eds. Pulp and Paper Manufacture: The Pulping of Wood. Second Edition. Volume 1. New York, McGraw-Hill Book Company. 1969. p. 486.

12. Ref. 5, p. 164.

13. Ref. 5, p. 124.

14. Casey, J. Pulp and Paper Chemistry and Chemical Technology. Third Edition. Volume II. New York, John Wiley and Sons. 1980.

15. Ref. 5, p. 40.

16. Ref. 12, p. 350.

17. Ref. 5, p. 154.

18. Ref. 5, p. 160.

19. Ref. 5, p. 170.

20. Ref. 5, pp. 166 through 167.

21. Liebergott, N., et al. A comparison of the Order of Addition of Chlorine and Chlorine Dioxide in the Chlorination Stage. TAPPI Journal. October 1990. p. 207.

22. Ref. 5, p. 158.

23. Results of Field Measurements of Chloroform Formation and Release From Pulp Bleaching. Technical Bulletin No. 558. New York, National Council of the Paper Industry for Air and Stream Improvement, Inc. December 1988. p. 2.

24. Byrd, Medwich, V. Jr., et. al., "Delignification of Chemical Pulps with Ozone: A Literature Review." TAPPI Journal, March 1992.

25. Code of Federal Regulations, Title 40, Part 60, Subpart 280. Applicability and designation of affected facility. Washington, DC. U. S. Government Printing Office. June 23, 1989.

26. Responses to Industry Survey discussed in the following letter: J.E. Pinkerton, National Council of the Paper Industry for Air and Stream Improvement, Incorporated (NCASI), to J. Telander, EPA: 15B, and P. Lassiter, EPA: CPB. February 11, 1992. (Responses were claimed confidential business Information).

3.0 EMISSION CONTROL TECHNIQUES

3.1 INTRODUCTION

This chapter discusses demonstrated techniques that can be applied to reduce HAP emissions from the pulping and bleaching process points discussed in Chapter 2.0. Control devices are typically applied to an emission point vent or wastewater stream to reduce HAP's in the vent gas or wastewater stream. Details of these controls are presented in Section 3.2 (vent controls) and Section 3.3 (wastewater controls). The techniques presented are candidates for control options that may provide the basis for the emission reduction requirements of the pulp NESHAP. Industry has commented that the methanol removal efficiencies for scrubbers and steam strippers presented in this document are overstated. However, the information provided in this chapter documents the analyses to date, based on available data. As the industry provides data to support these comments, these data will be considered.

Process modifications and substitutions affect the formation of HAP compounds in pulping and bleaching processes by changing the emission point or by altering the process operating conditions or process chemicals used.[1] Table 3-1 presents a summary of the process modifications and process substitutions under consideration as candidate control techniques.

The pulping process modifications (extended cooking, oxygen delignification, and improved washing) reduce the quantity of lignin in the pulp going to the bleach plant, thereby potentially reducing the quantity of chlorinated organics formed. Appendix C includes emission factors for

TABLE 3-1. PULPING PROCESS MODIFICATIONS AND BLEACHING PROCESS SUBSTITUTIONS[a]

Pulping Process Modifications
Extended Cooking (modified continuous cook [MCC] and rapid displacement heating [RDH])
Oxygen Delignification
Improved Brownstock Washing
Bleaching Process Substitutions
Chlorine Dioxide Substitution
Elimination of Hypochlorite
Oxygen/Peroxide Use in Extraction
Split Chlorine Addition
Ozonation

[a] Reference 1.

several of the process modifications and substitutions discussed above.

The bleach plant process modifications and substitutions focus on reduced use of chlorine and hypochlorite to achieve a reduction in chloroform generation.

3.2 APPLICABLE CONTROL TECHNIQUES FOR VENTS

This section presents control devices that are applicable for reducing HAP emissions from pulping and bleaching process vents. Many kraft facilities currently control some of their pulping vents by ducting to a combustion device and some of their bleaching vents by scrubbing. Table 3-2 presents a summary of the combustion devices currently being used to control different pulping vents in kraft pulp mills.[2] As shown, the most commonly used combustion control devices are lime kilns and power boilers, and most facilities currently control their digester relief and blow gases, evaporator noncondensibles and hotwells, and (where applicable) turpentine decanter vents.

Although less frequently controlled than vents, fugitive sources such as knotters and washers are controlled by some facilities. Sulfite mills typically control their pulping and bleaching vents by scrubbing. Scrubbing of the pulping vents is used to recover sulfur dioxide, which is used to generate cooking liquor. These scrubbers are also believed to remove the majority of the methanol in the vent streams.

To determine a control strategy for the identified pulping and bleaching emission points, those points that are currently controlled were evaluated. For pulping vents, combustion devices were considered; for bleaching vents, scrubbing alone, scrubbing and ducting the scrubber off gases to a combustion device, and incineration followed by scrubbing were evaluated. For pulping emission points that may be currently hooded but not fully enclosed (i.e., fugitive points such as knotters and rotary vacuum pulp washers), enclosure followed by conveyance to a combustion device was evaluated. Table 3-3 presents pulping emission point vent stream

TABLE 3-2. PERCENT OF KRAFT MILLS USING COMBUSTION CONTROL DEVICES[a]

Emission Sources	Combustion device				
	Lime kiln	Power boiler	Recovery furnace	Incinerator	Total
Batch digester relief gas	44	26	0	27	97
Continuous digester relief gas	63	20	9	3	95
Batch digester blow gas	68	6	0	17	91
Continuous digester blow gas	47	30	7	4	88
Turpentine decanter vent	49	16	0	8	73
Evaporator vents (e.g., noncondensibles, hotwells)	68	20	0	0	88
Washer screens	5	0	0	0	5
Washer filtrate tanks	11	0	0	0	11
Washer hood vent	0	6	0	0	6
Deckers	3	6	0	0	9
Knotters	3	5	0	0	8

[a] Data taken from Reference 2.

TABLE 3-3. TYPICAL VENT CHARACTERISTICS FOR KRAFT PULPING EMISSION POINTS

Emission point	Capacity range[a] (ADT/day)	Flow rate[b] (scmm/Mg pulp/day)	Temp.[b] (°C)	Moisture content (%)	Heat content[c] (Kj/scm)	Enclosure needed for capture[d]
Batch digester blow gas	94-1800	1.3	65-100	30-99	70	No
Continuous digester blow gas	94-1800	0.026	75-150	35-70	6	No
Digester relief gas	94-1800	0.0026	25-60	3-20	18,400	No
Knotter hood (vibratory screens)	94-1800	0.9	20-75	2-10	20	Yes
Washer	65-1625	0.9	20-45	2-10	40	Yes
Washer seal tank and foam tank	65-1625	0.18	55-75	15-35	20	No
Decker/screen	65-1625	0.9	20-45	2-10	0.2	Yes
Evaporator/hotwell	65-1625	0.0027	80-145	50-90	21,300	No
Turpentine condenser	94-1800	0.0026	25-60	3-20	18,800	No

[a] Capacities are from Reference 3. ADT = Air dried short tons/day.
[b] Based on Reference 2. Flow rates are reported at standard conditions of dry gas (21.1°C and 760 mm Hg).
[c] The heat content is the heat released based on the compounds in the vent stream (reference 4) and is at dry standard conditions.
[d] If an emission point is open to the atmosphere (i.e., fugitive), an enclosure is needed for complete capture prior to conveyance; otherwise, the emission point is assumed to be achieving complete capture and only requires conveyance.

characteristics and identifies which points needed enclosures prior to routing to a combustion device.[2,3,4] The emission point characteristics presented in this table should be considered in selecting an appropriate control device. Section 3.2.1 discusses the vent gas collection and transport system that is used to capture and convey vent gas to a control device. Section 3.2.2 discusses applicable control devices for pulping and bleaching vent streams.

3.2.1 Vent Gas Collection and Transport System

To control HAP emissions from pulping and bleaching operations using stand-alone or existing devices, vent streams must be captured and transported to the control device. Additionally, the vent gas may be conditioned in the transport system to alter its characteristics before it reaches the control device.

Typical components of the capture and conveyance system are the hoods or enclosures, pipe or ductwork, the prime mover employed (i.e., fan), gas conditioning equipment (if needed), and safety devices.

Two methods are generally used to capture vent streams: (1) hard-piping and (2) hoods or enclosures. The method used depends on the emission point type and will affect the volumetric flow rate and relative organic compound concentration of the vent stream. When an emission point is an enclosed process with a vent, the vent can be hard-piped to a control device, thereby reducing the introduction of ambient air into the vent stream, and reducing the vent stream flow rate. Digester gases and evaporator vent gases are examples of vent points that can be hard-piped to a control device.

When an emission point is diffuse or large, such as a washer or decker, vent emissions may be captured using an enclosure or well-enclosed hood and then hard-piped to a control device. Hood collection efficiency is a function of capture velocity, which depends on the creation of an air flow

that is sufficient to capture the contaminated air emitted from the point and draw the air into the exhaust hood.[5] At a constant volumetric air flow rate, hood capture efficiency decreases as the distance between the point and the hood increases.[6] Based on discussions with vendors, enclosures can be constructed to achieve complete capture. A 34-percent reduction in flow was assumed when replacinga hood with an enclosure for pulping vent streams.[7]

The type of duct material used is determined by the characteristics of the gas in the vent stream. Two materials commonly used for ducts in the pulp industry are fiberglass and stainless steel. Fiberglass ducts have the advantages of relatively low cost, light weight, and corrosion resistance. Fiberglass is commonly used for venting bleach plant towers and washer hoods. The problems identified with using fiberglass ducting in the pulp industry are its inability to be electrically grounded to prevent the buildup of static charge and the absorption of hydrocarbons in its fiberglass resin.

Stainless steel is the preferred material of construction for non-condensible gas (NCG) transport systems.[8] Although it resists corrosion by water and sulfur compounds, stainless steel is susceptible to corrosion by chlorides and is, therefore, not used for conveying bleach plant vent gas streams.[9]

Ductwork may be insulated to reduce the amount of vent gas cooling that takes place in the ducting and to prevent freezing of moisture in the duct during winter.

Vent streams in the pulp industry, such as those from digester blow gas vents, may have sufficient pressure to convey the vent gases through the transport system to the control device. When insufficient pressure is provided by an emission point, or where the source of emissions has to be captured (such as pulp washer hood vents), fans must be used to convey the vent gases. However, fans may not be the most desirable prime movers in transport systems conveying

combustible gases. Process upsets and operating problems can occur at any pulp mill, and fans have been reported to be the spark source for explosions in transport systems where design flaws, inadequate maintenance, or improper operation allowed explosive gases to enter a fan that was designed for handling gases below their lower explosion limit (LEL).[10]

Explosion proof motors can be used; however, based on the concentrations of organics in the vent gases, the vent streams from points examined in this document would be below the LEL. In some cases, such as with low-volume, high-concentration (LVHC) streams (e.g., weak liquor storage tank vent stream), the gas concentration may exceed 25 percent of the LEL, the typical safety guideline level.[11] The explosive potential of the vent streams varies greatly depending on the concentration of turpentine. Flame arrestors have been incorporated into the duct design as a safety precaution.

Steam ejectors are preferred as prime movers in transport systems handling high-concentration NCG's. Steam ejectors eliminate the source of sparks from the system and provide dilution of NCG's with steam, which lowers the LEL. However, steam ejectors require a significant amount of steam, which is subsequently vented to the control device. Because of the potential impact of this steam on the control device, such as reduced heat content and increased volume of vent streams, steam ejectors are not normally used on high-volume, low-concentration (HVLC) vent streams.[12]

Vent gas may be conditioned to alter the moisture content or the temperature of the stream before it is vented to the control device. This may be accomplished using condensers, knockout drums, or entrainment separators in the gas transport system.

Preheating of vent gases is only performed when the stream is controlled with a combustion device. Vent streams may be preheated if their volumetric flow rates are large enough to affect combustion in the control device. Preheating

is generally only practiced on HVLC streams or streams with little or no turpentine, where the risk of explosion is sufficiently low.[13] Preheating would therefore be more applicable for streams such as knotter and washer vent streams in hardwood pulping processes and softwood pulping processes, where the turpentine concentration is sufficiently below the LEL. For this analysis, no preheating was assumed.

When ducting vent streams that contain potentially explosive compound concentrations, safety devices must be incorporated into the gas transport system. Flame arresters and rupture discs are components typically found in transport systems. Flame arresters prevent the propagation of fires through the duct system. Rupture discs are used to prevent damage to the gas transport system by rapidly venting gases during explosions. Monitoring equipment may also be used to provide real-time observations of vent stream parameters such as temperature and volume percent of combustible compounds (percent LEL).

3.2.2 Applicable Vent Control Devices

3.2.2.1 Combustion Control Devices. Combustion control devices destroy the chemical structure of the organic compound by oxidation at elevated temperatures. These devices operate on the principle that any VOC heated to a high enough temperature in the presence of sufficient oxygen will oxidize to carbon dioxide and water.[14] Combustion devices have been documented to control organic compounds by at least 98 percent under a wide range of vent stream and VOC characteristics.[15]

Two strategies are used in controlling vent gases with combustion devices. First, the vent gas stream may be used as auxiliary fuel if the stream has a high enough heat content (approximately 100 Btu/scf or greater).[16,17] Secondly, the vent gas stream may be used as combustion air if the stream has sufficient oxygen content (approximately 20 percent).

Because the basic operating principle of the various combustion control devices is similar, the factors that affect

their destruction efficiency are also similar. The destruction efficiency of these devices is a function of the temperature of the combustion chamber (or zone), the residence time of the pollutant in the combustion chamber, and the mixing in the combustion chamber of the pollutant, oxygen, and the hot gases generated by combustion.[14] Typical residence times for incinerators achieving at least 98 percent destruction efficiencies range from 0.25 to 1.5 seconds.[18] The temperature of the combustion chamber depends on the amount and heat content of the fuel burned, the percent excess air, the moisture content of the stream, and the amount of oxygen.

Applicable combustion devices discussed in this section include lime kilns, power boilers, recovery furnaces, thermal incinerators, and flares. Properly operated, each of these combustion devices can achieve destruction efficiencies of 98 percent or greater.

The lime kiln, power boiler, and recovery furnace are integral to mill processes. However, vent streams may be routed to these devices without interfering with the normal operation of the process. Mill combustion devices such as lime kilns and power boilers are occasionally shut down because of process upsets or maintenance. During this time, these devices will not be available to control vent gases. However, interruptions in combustion device service may also correspond with suspension of the processes that generate the emissions. For example, a mill may halt pulping processes (e.g., digestion) shortly after its recovery furnace goes down because of limited liquor reserve. Available data show an average unscheduled downtime between 1 and 5 percent for pulp mill combustion devices.[19] For costing purposes, these devices were assumed to operate 350 days per year.

3.2.2.1.1 Lime kiln. The lime kiln is an essential element of the causticizing cycle, and is used to calcine lime mud (calcium carbonate) to produce calcium oxide. The high temperatures encountered in the lime kiln (950 to 1,250°C)

make it very efficient in destroying VOC, with control efficiencies reported to be greater than 98 percent.

The lime kiln has been demonstrated in the pulp industry as a control device for LVHC emission points such as digester relief gases, digester blow gases, turpentine recovery system NCG's, and evaporator vent gases. These LVHC vent gas streams are generally used as supplementary fuel because these streams have been demonstrated to contain sufficient heat content. However, these vent streams may exceed the LEL if high levels of turpentine are present. Preheating of the vent gases is generally not practiced because of the risk of explosions from the turpentine in the vent stream.[13] The volumetric flow rate generated by typical pulp washers is usually too large to vent to the lime kiln. Therefore, the lime kiln may be less applicable for controlling HVLC vent streams.

The cross-media impacts resulting from venting HAP emission points to the lime kiln are the generation of the HAP-laden liquid stream from any gas conditioning equipment used (i.e., entrainment separator, condenser, or knock-out drum) and a potential increase in sulfur oxides emissions from the kiln exhaust due to the TRS compounds in the pulping vent streams. The condensate streams may be recycled back to mill processes (e.g., pulp washers) or sent to wastewater treatment depending on the volumes and characteristics of the wastewater generated.

3.2.2.1.2 Power boiler. Power boilers, which include coal, natural gas, oil, wood waste, or combination fuel-fired boilers, are designed to produce heat, steam, and electricity for mill operations. Power boilers with capacities greater than or equal to 150 million Btu/hr operate at high temperatures (generally greater than 1,000°C) and can serve as excellent control devices, providing at least 98 percent destruction of VOC.[20]

Power boilers have been demonstrated in the pulp industry as a control device for pulping vent emission points, and may be preferred over the lime kiln for burning vent gases because

they have less downtime and can handle larger vent gas volumes than the lime kiln.[21]

The vent gas stream is generally used as part or all of the combustion air needed by the boiler, although the stream may also serve as auxiliary fuel.[22] The emission points vented to the power boiler are both LVHC and HVLC streams such as digester relief and blow gases, turpentine recovery system, evaporator, and pulp washer hood vent gases. However, streams that contain high levels of turpentine, such as digester relief and blow gases from softwood pulping, may approach the LEL, and are more often vented to the lime kiln instead of to the power boiler. Other streams contain methanol and TRS, which at the reported concentrations in the HVLC streams, would be below the LEL yet still have some fuel value. The fuel credit from the heat of combustion of the organics in the stream, as well as the fuel penalty of heating the stream's moisture and air to combustion temperatures, were considered when venting these streams to existing combustion devices.[23]

Power boilers are not currently applied to control the unscrubbed halogenated vent gases associated with the bleaching process. However, a halogenated stream may first be scrubbed to remove the majority of the halogens prior to combustion. The impacts of venting chlorinated streams to the power boiler have not been fully evaluated. However, the introduction of bleach plant vent streams would likely result in an accelerated corrosion rate of the boiler.

Information detailing the use of gas conditioning techniques for vents ducted to power boilers is not available. The assumptions and basis for venting gas streams to an existing combustion device are discussed in Chapter 5.0. The cross-media impacts resulting from venting HAP emission points to the power boiler are identical to those discussed for lime kilns in Section 3.2.2.1.1.

3.2.2.1.3 Recovery furnace. The recovery furnace is the heart of the kraft liquor recovery process, and is used to recover the chemicals used in cooking liquor. Furnaces

generally serve as excellent control devices, providing at least a 98 percent destruction of VOC because of their high operating temperatures (generally exceeding 1,000°C).[15]

The recovery furnace has been demonstrated in the pulp industry as a control device for HVLC emission points. However, this combustion device is generally not preferred for controlling vent gases with high levels of turpentine because of the risk of explosions. The vent gases controlled by the recovery furnace should be conditioned to remove moisture because water may react violently with the smelt bed in the furnace.[15] The vent streams controlled in the recovery furnace would have similar characteristics and LEL to those controlled in the power boiler.

Recovery furnaces do not currently receive the unscrubbed halogenated vent gases associated with the bleaching process. However, a halogenated stream may first be scrubbed to remove the majority of the halogens prior to combustion. The impacts of venting chlorinated streams to the recovery furnace have not been fully evaluated.

The cross-media impacts resulting from venting HAP emission points to the recovery furnace are similar to those of lime kilns, as discussed in Section 3.2.2.1.1.

3.2.2.1.4 Thermal incinerator. Thermal incinerators operate on the principle that any VOC will oxidize to carbon dioxide and water if heated to a high enough temperature in the presence of a sufficient amount of oxygen.[24] A thermal incinerator is a refractory-lined chamber containing a burner or burners used to oxidize VOC-containing vent streams. Although there are many different incinerator designs, an example incinerator is shown in Figure 3-1. A discrete dual-fuel burner, an inlet for the vent stream, and a combustion air inlet are arranged in a premixing chamber to ensure thorough mixing. The mixture of hot combusting gases then passes into the main combustion chamber. This chamber is sized to allow the mixture enough time at the elevated temperature for oxidation to reach completion (residence times

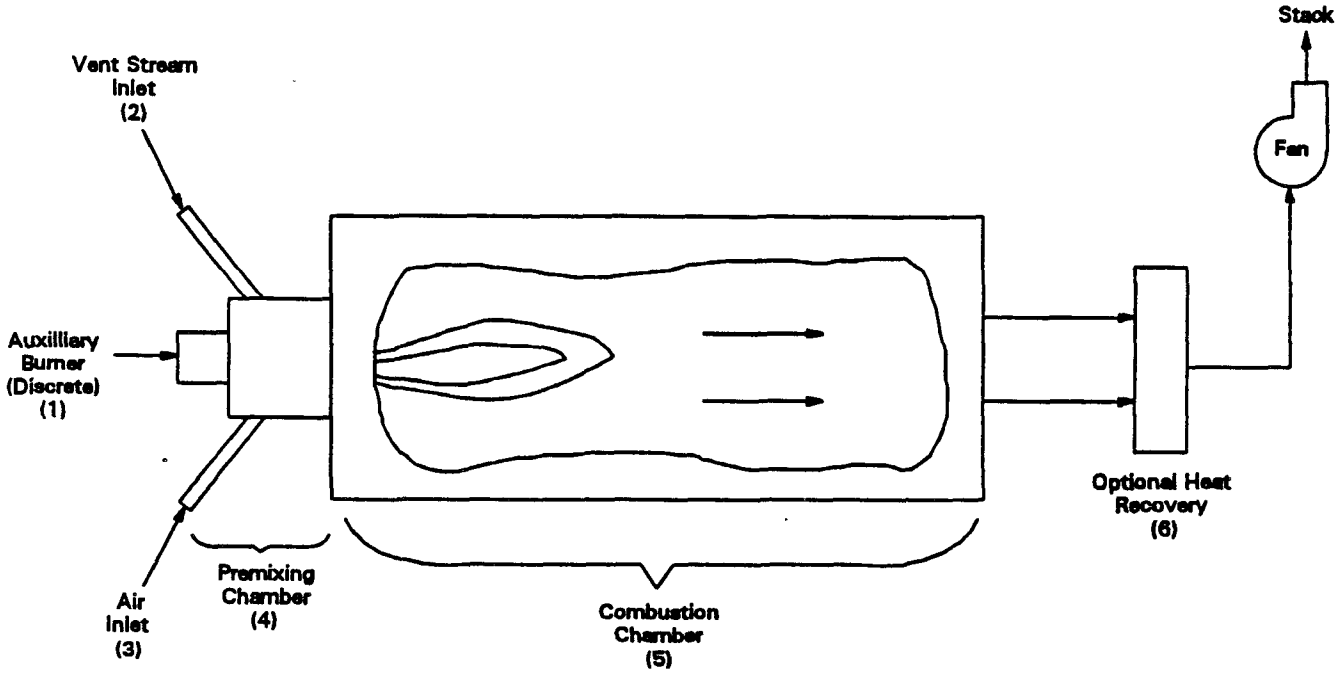

5316260R

Figure 3-1. Discrete Burner, Thermal Incinerator

of 0.3 to 1.0 seconds are common). Performance tests have demonstrated that properly operated thermal incinerators can achieve 98 percent or greater destruction efficiency for most VOC.[15]

Incinerators have been demonstrated in the pulp industry as an applicable control device for reducing gaseous emissions, and can be designed to control both LVHC and HVLC vent streams. Package single-unit thermal incinerators exist that can control streams with flow rates in the range of 14 to 1,400 standard cubic meters per minute (500 to 50,000 standard cubic feet per minute). However, combustion of a vent stream with a heat content less than approximately 100 Btu/scf, such as vent streams from the pulp washers, usually requires burning supplemental fuel to maintain the desired combustion temperature.[4,15]

Incinerators can be used in conjunction with gas absorbers to reduce HAP emissions from bleach plant vents. However, thermal oxidation of halogenated VOC requires higher temperatures to oxidize the halogenated organic compounds. The halogenated exhaust streams from the incinerator are quenched in order to lower their temperature and then routed through absorption equipment, such as a packed tower scrubber.[25] Section 3.2.3.2.3 discusses the operation and application of absorption equipment.

It has been reported in a literature survey that some mills (approximately 33 percent of the mills that responded to the survey) use entrainment separators to remove moisture from the vent gas prior to venting to an incinerator.[26] Loss of flame due to excessive moisture was also reported in the survey.[27] It is not known whether preheating of the vent gas is practiced with the use of an incinerator. Although incinerators can be designed with heat recovery to reduce auxiliary fuel costs, none of the facilities that responded to the survey use heat recovery because of the risk of explosions.[26]

Cross-media impacts resulting from venting emission points to an incinerator involve the liquid stream generated from the gas-conditioning equipment used to remove moisture from the vent stream, and potentially unburned hydrocarbons, nitrogen oxide, carbon monoxide, and sulfur oxides emissions associated with the incinerator exhaust. The impact of condensate streams has not been fully evaluated. These streams may be recycled back to mill processes (e.g., pulp washers) or sent to wastewater treatment, depending on the volumes generated. If a gas scrubber is used to remove acid gases from incinerator exhaust, brine solution, formed when neutralizing acid gases with caustic solution, must be disposed of, and is typically sent to the wastewater treatment system.

3.2.2.1.5 Flare. Flares are open combustion devices in which the oxygen necessary for combustion is provided by the ambient air in the proximity of the flame. Properly operated, flares have been shown to have VOC/HAP destruction efficiencies of 98 percent or greater.[28] Flares are capable of accepting fluctuations in VOC concentration and flow rate and are applicable for continuous, batch, and variable flow rate vent stream applications. However, sufficient heat content is necessary in the vent stream for proper operation. For this reason, flares are only used as backup systems at a few facilities in the pulp industry to primary combustion devices such as lime kilns.

3.2.2.2 Gas absorbers. Gas absorbers are used to recover sulfur dioxide from sulfite mill pulping vents and to control chorine, hydrochloric acid, and chlorine dioxide in bleach plant vent streams. Polar organic compounds such as methanol are also removed. This section only discusses bleach plant scrubbers because sulfite pulping vent scrubbers are an integral part of the chemical recovery process.

In the absorption process, soluble components of a waste gas mixture are dissolved in the scrubbing medium. The pollutant diffuses from the gas into the caustic solution when

the liquid contains less than the equilibrium concentration of the gaseous component. The difference between the actual concentration and the equilibrium concentration provides the driving force for absorption.[29]

Figure 3-2 presents a schematic of a packed absorption tower using countercurrent flow. The vent stream containing compounds to be absorbed is introduced near the bottom of the tower, passes through the packing material, and exits the tower near the top. The packing in the absorber tower helps to increase contact between the soluble compounds and the absorbing solution. The absorbing solution flows from the top of the column, countercurrent to the vapors, absorbing the solute from the gas phase.[29] The absorbing solution used in pulp mill bleach plant scrubbers is typically caustic and originates from bleach plant extraction stage filtrates (i.e., the caustic sewer), weak wash from the chemical recovery process, white liquor, sodium bisulfite (a byproduct from some chemical manufacturing operations), or from fresh caustic solution. Other media used include sulfur dioxide and chilled water.[30]

Removal efficiencies for gas absorbers vary based on column design, the type of absorbing solution, and the solubility of the compound being absorbed. Chlorine removal efficiencies as high as 99 percent have been documented with a caustic solution.[30] The chlorine reacts to form sodium chloride and sodium hypochloride.

Removal efficiencies for other compounds range from 0 to 99 percent. For example, polar compounds such as methanol approach 99 percent removal, and compounds such as chloroform have insignificant (approximately 0 percent) removal.[31] However, absorbed compounds such as methanol may volatilize back into the atmosphere from the waste treatment process, thus lowering the overall efficiencies of the scrubber as an air control device.

Using an Advanced System for Process Engineering (ASPEN) modeling approach, the scrubber removal efficiencies for

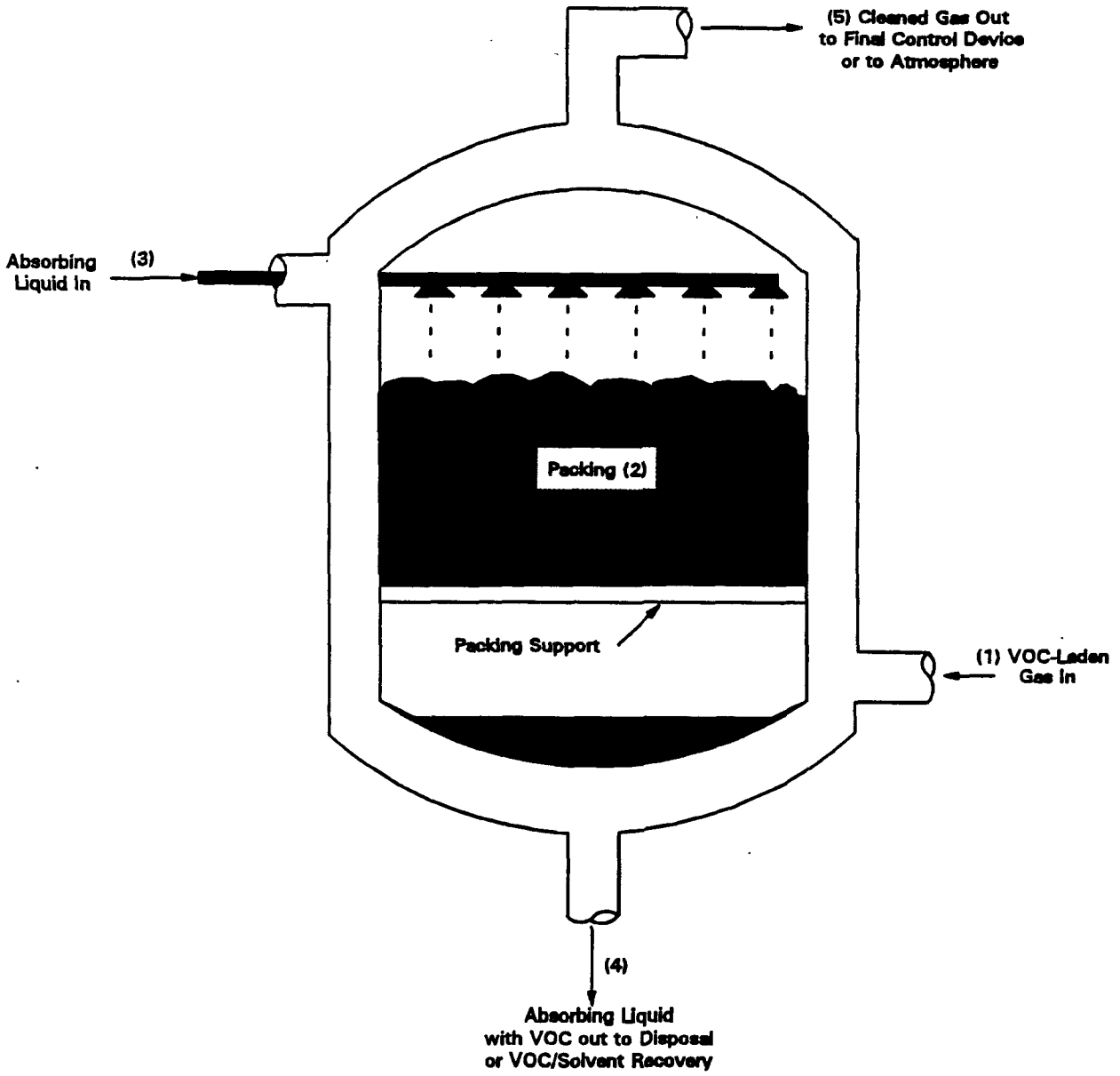

Figure 3-2. Packed Tower Absorption Process

specific compounds were estimated.[31] The emissions from the scrubber effluent (due to volatilization) were then estimated to approximate a net emission reduction.[31] Table 3-4 presents the modeled scrubber removal efficiencies and net emission reductions.

The cross-media impact associated with using gas absorbers with a caustic solution is the production of a brine solution. This solution is typically sewered with the bleach plant effluent into the wastewater treatment operations. This impact is discussed in Chapter 4.0. Some facilities use fresh caustic as the scrubbing medium and use the scrubber effluent in the extraction stage of the bleaching process.

3.2.2.3 Condensers. Moisture, VOC, and volatile HAP's can be removed from vent streams using condensation. In this technique, VOC, HAP and moisture are separated from vent streams by lowering the gas temperature enough to create a change from gas to liquid phase. In a two-component system where one of the components is non-condensible (e.g., air), condensation occurs at dew point (saturation) when the partial pressure of the volatile compound is equal to its vapor pressure. Condenser flow capacities are typically limited to approximately 57 scmm (2,000 scfm) for a single unit.[32]

Condensers are currently used in the pulp industry primarily to condition vent gases by removing moisture. Organics, such as turpentine, can also be recovered from digester blow gases using condensers. The removal efficiency of condensers varies, but can achieve as high as 90 percent in some cases.[33] Condensers may also be used as supplemental control techniques to lower moisture content and remove potentially explosive organic compounds from LVHC and HVLC streams before they are sent to the primary control device. The resulting condensate streams may be recycled back to mill processes (e.g., pulp washers), steam stripped, or sent to wastewater treatment, depending on the volumes generated.

TABLE 3-4. SCRUBBER REDUCTION ESTIMATES

Compound Classification[a]	Estimated Scrubber Removal (%)[b]	Estimated Reduction (%)[c]
Chlorine	99	99
High Solubility	99	75
Methanol		
Acetone		
Formaldehyde		
2,4,5-Trichlorophenol		
Pentachlorophenol		
Chlorophenolics		
Hydrochloric Acid		
Chlorine Dioxide		
Medium Solubility	60	35
Methyl Ethyl Ketone		
Acrolein		
Acetaldehyde		
Propionaldehyde		
Dichloroacetaldehyde		
Low Solubility	0	0
Chloroform		
Carbon Tetrachloride		
Methylene Chloride		
Toluene		
1,1,1-Trichloroethane		
Alpha-Pinene		
Beta-Pinene		
Chloromethane		
p-Cymene		
Average	---	70

a Compounds are classified by solubility. High-solubility compounds have solubilities greater than or equal to methanol; low-solubility compounds have solubilities less than or equal to chloroform; medium-solubility compounds were between methanol and chloroform.

b Based on a model scrubber designed to remove 99 percent of the chlorine, 99 percent of the methanol was removed and less than 1 percent of the chloroform was removed. (Reference 30)

c The volatility of the speciated compounds was evaluated and a fraction emitted was estimated based on the mass removed in the scrubber effluent.

3.2.2.4 Adsorbers. Carbon adsorbers are not currently used in the pulp industry, although regenerative carbon adsorbers, in conjunction with incineration, can be used to control HVLC vent streams.

3.3 APPLICABLE CONTROL TECHNIQUES FOR WASTEWATER EMISSION POINTS

In wood pulping, bleaching, and chemical recovery processes, wastewater streams containing HAP compounds are generated. Generally, wastewater passes through a series of collection units before being sent to treatment units. Many of the collection system units are open to the atmosphere and allow some of the HAP's to be emitted to the ambient air.[34] This section discusses control devices used to reduce HAP emissions from wastewater points. Section 3.3.1 briefly describes the techniques used to reduce HAP emissions from the wastewater collection system. Sections 3.3.2 and 3.3.3 discuss steam and air strippers with vent control, respectively.

3.3.1 Wastewater Collection System

To reduce HAP emissions from the pulping and bleaching wastewater points described in Chapter 2.0, the collection system that conveys the wastewaters to treatment operations (including strippers) should be designed in such a way as to reduce the amount of contact between the HAP-containing wastewater and the ambient air. This can be accomplished by using covers and water seals on collection system components.[35] Hard-piping the wastewater point to the treatment system or control device provides the best control of HAP emissions from wastewater.[36]

3.3.2 Steam Stripper with Vent Control

Steam strippers are currently used to reduce organic and sulfur compound loading in condensate streams generated by the pulping processes. Steam stripping involves the fractional distillation of wastewater to remove organic compounds. The basic operating principle of steam stripping is the direct contact of steam with wastewater. This contact provides heat for vaporization of the more volatile organic compounds.[37]

At a pulp mill, the steam stripper can be a stand-alone system or it can be integrated into the evaporator effects.

In the stand-alone steam stripping process, wastewater containing organic compounds is pumped to the stripping column. Heat is provided to the stripping column by direct injection of steam into the bottom of the column.[38] Generally, steam stripping columns are equipped with trays or packing to provide contact between the vapor and liquid phases. In the pulp industry, the overhead vapor stream containing organics and water is typically partially condensed, with the condensate routed back to the stripper column as reflux. The vapor stream is then incinerated in an on-site combustion device, as described in Section 3.2.2.[39] The treated wastewater stream is passed through a heat exchanger that cools the treated wastewater and preheats the stripper feed stream. The stripped wastewater is either reused in the process (i.e., as wash water) or discharged to wastewater treatment operations.

Alternatively, a steam stripper can be integrated with the evaporator set, as shown in Figure 3-3. In this case, the overhead vapor stream, which is predominantly steam, is routed to the next effects. A reflux tank is also incorporated to direct the bottoms from the upstream effect into the steam stripper. The vent gases from the reflux tank are typically sent to a combustion device.

Achievable VOC and HAP emission reductions are highly dependent on wastewater characteristics, such as organic concentration and composition, and the design and operation of the stripper as well as the collection and treatment systems. Steam stripper removal efficiencies ranging from 75 to 99 percent have been reported in the literature.[40]

The steam stripper design and operating parameters that have the greatest effect on the removal performance of organic compounds are the number of trays (or height of packing) and the steam-to-feed ratio (SFR). In general, the removal efficiency increases as the number of trays (height of packing) increases. (For a given stripper system, there will

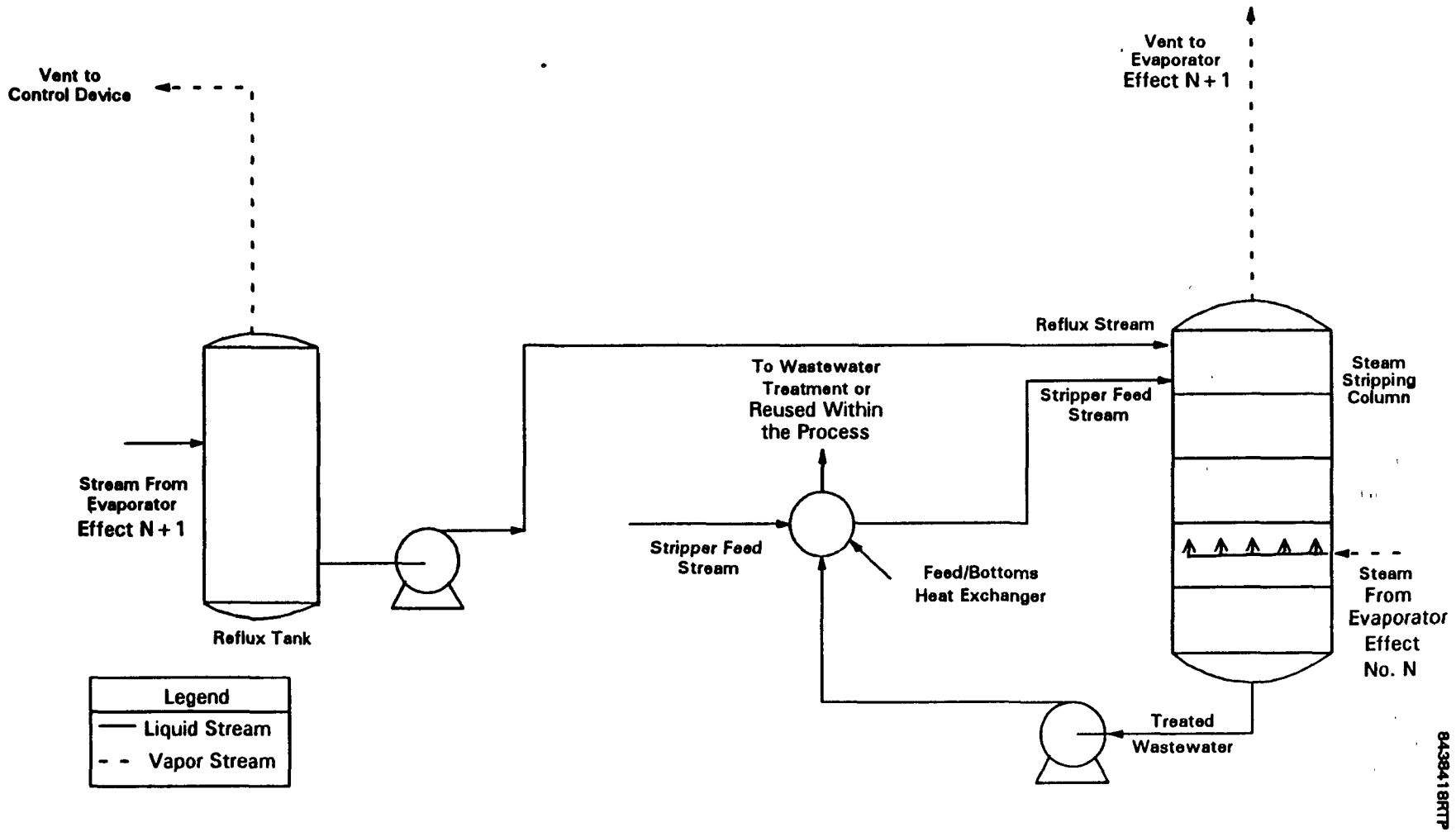

Figure 3-3. Continuous Integrated Steam Stripper System

be a maximum number of trays (packing height) beyond which no additional removal will be achieved.)

An increase in the SFR ratio will increase the ratio of the vapor-to-liquid flow through the column. This increases the stripping of organics into the vapor phase. Because additional heat is provided when the steam rate is increased, additional water is also volatilized. Therefore, an increase in the SFR ratio is also normally accompanied by an increase in the steam rate flowing out of the column in the overhead stream.[41]

Based on responses to an industry survey, the average SFR used for controlling pulping wastewater streams is 1.5 lb. stream/gal. wastewater.[42] The Kremser equation was then used to generate a relationship between the fraction of compound removed (Fr) and compound Henry's Law constant at an SFR of 1.5 lb/gal.[42] These Fr's are summarized in Table 3-5. Predicted HAP removals at an SFR of 1.5 lb/gal range from 90 to 99 percent.[42]

Steam strippers are currently used in the pulp industry to reduce TRS and organic compound loading in pulping process and chemical recovery evaporator wastewater or condensates. Typically, steam stripping is applied to condensate streams from the blow tank, turpentine recovery system, and the evaporators. Liquid streams from any gas-conditioning equipment used to remove moisture from vent gases may also be stripped to remove organics before being sewered.

The cross-media impacts associated with the use of steam strippers involve the organic-laden vent stream and stripped wastewater stream. Criteria pollutants (i.e., sulfur dioxide, oxides of nitrogen, carbon monoxide and particulates) will also be emitted from the fossil fuel burning required to generate the steam to operate the stripper. Sludges may be generated from the feed tanks and must be disposed. For this analysis, no auxiliary fuel is necessary for burning the steam stripper overheads vent stream because the heat content of this stream offsets the fuel required to bring to combustion temperature.[23]

TABLE 3-5. STEAM STRIPPER REMOVAL EFFICIENCIES

HAP Compound	Removal Efficiency[a]
Acetaldehyde	99
Acrolein	99
2-Butanone (MEK)	99
Formaldehyde	99
Methanol	90
Propionaldehyde	99
Total Reduced Sulfur (TRS)	94[b]

[a] Removal efficiency is based on a steam-to-feed ratio of 1.5 pounds of steam per gallon of wastewater. (Reference 42)

[b] Removal efficiency for TRS is based on the average removal efficiencies for hydrogen sulfide, dimethyl disulfide, dimethyl sulfide, and methyl mercaptan.

3.3.3 Air Stripper with Vent Control

Another control technique for reducing HAP emissions from wastewater is air stripping. The underlying principle for air stripping is vapor-liquid equilibrium. By forcing large volumes of air through the contaminated water, the air-water interface is increased, resulting in an increase in the transfer rate of the organic compounds into the vapor phase.[43] The overhead vent stream is then sent to a combustion device.

Although air strippers have been employed in the pulp industry to reduce TRS emissions, the organic concentrations in the condensate streams from the blow tank, turpentine recovery operations, and evaporators are generally too high to be effectively controlled by an air stripper.

3.4 REFERENCES

1. Summary of Technologies for the Control and Reduction of Chlorinated Organics from the Bleach Chemical Pulping Subcategories of the Pulp and Paper Industry. U. S. Environmental Protection Agency, Office of Water Regulations and Standards. Washington, D.C. April 27, 1990. pp. 20, 22, 25 through 27, 43, 54, and 63.

2. Responses to Industry Survey discussed in the following letter: J.E. Pinkerton, National Council of the Paper Industry for Air and Stream Improvement, Incorporated (NCASI), to J. Telander, EPA: 15B, and P. Lassiter, EPA: CPB. February 11, 1992. (Responses were claimed confidential business information).

3. Environmental Pollution Control, Pulp and Paper Industry, Part 1, Air. U.S. Environmental Protection Agency. Technology Transfer. Publication No. EPA/625/7-76-001. October 1976. p. 1-4.

4. Memorandum from Greene, D.B., Radian Corporation, to Shedd, S.A., EPA/CPB. Heat Release Factors. September 30, 1993.

5. Committee on Industrial Ventilation. Industrial Ventilation. 19th Edition. Ann Arbor, Michigan, Edwards Brothers Incorporated. 1986. p. 4-1.

6. Cooper, C.D. and F.C. Alley. Air Pollution Control: A Design Approach. Boston, PWS Engineering. 1986. pp. 219-220.

7. Memorandum from Greene, D.G., Radian Corporation, to Pulp and Paper NESHAP File. Brownstock Washer Enclosure Costs. July 21, 1993.

8. Collection and Burning of Kraft Non-Condensible Gases - Current Practices, Operating Experience, and Important Aspects of Design and Operation. Technical Bulletin No. 469. New York, National Council of the Paper Industry for Air and Stream Improvement, Inc. August 29, 1985. p. 40.

9. An Investigation of Corrosion in Particulate Control Equipment. U. S. Environmental Protection Agency, Office of General Enforcement. Washington, DC. Publication No. EPA-340/1-81-002. February 1981. p. 38.

10. Ref. 8, p. 41.

11. OAQPS Control Cost Manual. Fourth Edition. U. S. Environmental Protection Agency, Office of Air Quality Planning and Standards. Research Triangle Park, NC. Publication No. EPA 450/3-90-006. January 1990. p. 3-26.

12. Ref. 8, p. 42.

13. Ref. 8, p. 51.

14. Hazardous Air Pollutant Emissions from Process Units in the Synthetic Organic Chemical Manufacturing Industry--Background Information for Proposed Standard. Volume 1B, Control Technologies. U. S. Environmental Protection Agency, Office of Air Quality Planning and Standards. Research Triangle Park, NC. EPA-453/D-92-0166. November 1992. pp. 2-8 and 2-9.

15. Memorandum from Farmer, Jack R., EPA/CPB to Ajax, B., et al., EPA/CPB. Thermal Incinerators and Flares. August 22, 1980.

16. Ref. 8, p. 50

17. Memorandum from Pandullo, R.F., Radian Corporation, to Barbour, W., Radian Corporation, Evans, L., U.S. EPA, et al. Summary of April 11 Meeting to Discuss Thermal Incinerator Cost Issues. April 27, 1990.

18. Ref. 14, pp. 2-12 and 2-18.

19. Telecon. Bagley, C.J., Radian Corporation, with Holt, J., Hartford Steam Boiler, July 19, 1993. Discussion of Percent Downtime.

20. Ref. 14, p. 2-18.

21. Ref. 8, p. 56.

22. Memorandum from Seaman, J.C., Radian Corporation, to Project File. Control of Pulping Vent Streams in an Existing Combustion Device. September 29, 1993.

23. Memorandum from Greene, D.B., Radian Corporation, to Project File. Fuel Penalty. October 8, 1993.

24. Ref. 14, p. 2-7.

25. Ref. 14, p. 2-10.

26. Ref. 8, p. 59.

27. Ref. 8, p. 60.

28. Ref. 14, p. 2-6.

29. Ref. 14, pp. 2-48 and 2-49.

30. Bleach Plant Chlorine and Chlorine Dioxide Emissions and Their Control. Technical Bulletin No. 616. New York, National Council of the Paper Industry for Air and Stream Improvement, Inc., September 1991. pp 2 to 10.

31. Memorandum from Olsen, T.R., Radian Corporation, to Shedd, S.A., EPA/CPB. Model Scrubber Removal Efficiencies. September 17, 1993.

32. Ref. 14, p. 2-33.

33. Control Technologies for Hazardous Air Pollutants Handbook. Air and Energy Engineering Research Laboratory Office of Research and Development. U. S. Environmental Protection Agency, Research Triangle Park, NC. EPA/625/6-86/014. September 1986. p. 27.

34. Industrial Wastewater Volatile Organic Compound Emissions--Background Information for BACT/LAER Determinations. U. S. Environmental Protection Agency, Control Technology Center. Research Triangle Park, NC. Publication No. EPA-450/3-90-004. January 1990. p. 3-2 and 3-3.

35. Ref. 34, p. 4-20.

36. Ref. 34, p. 4-22.

37. Ref. 34, p. 4-3.

38. Ref. 34, p. 4-4.

39. Ref. 8, p. 30.

40. Ref. 34, p. 4-14.

41. Ref. 34, p. 4-13.

42. Memorandum from Fortier, G.E., Radian Corporation, to Pulp and Paper NESHAP Project File. Design Steam-to-Feed Ration of a Steam Stripper in Pulp Mills and Development of Fraction Removed Values. September 3, 1993.

43. Ref. 34, p. 4-18.

4.0 MODEL PROCESS UNITS, CONTROL OPTIONS, AND ENVIRONMENTAL IMPACTS

This chapter defines the model process units that were developed to analyze environmental and cost impacts on the pulp industry, the emission control options that were selected, and the environmental impacts of applying these controls to an example facility. Model process units are parametric descriptions of the types of processes that exist and that are likely to be constructed in the future. Control options are the set of demonstrated emission control techniques currently being evaluated in analyzing the MACT. The environmental impacts for these options include air, water, energy, and other impacts.

Section 4.1 describes the model process units developed for pulping and bleaching operations and how the units were used to estimate national emissions. The emission control options and environmental impacts for an example mill are presented in Section 4.2 and Section 4.3, respectively.

4.1 MODEL PROCESS UNITS

This section presents a discussion of the development of model process units and a brief description of how these models were used in estimating national emissions and impacts of control options. For the purpose of the analysis, the emission points within the scope of this document were divided into pulping and bleaching areas (as discussed in Chapter 2.0). The pulping area represents the pulping and washing processes, as well as chemical recovery through evaporation and oxygen delignification processes (where applicable). The bleaching area represents the chemical bleaching process. Industry has commented that the pulping and bleaching models used to analyze the environmental and

cost impacts do not represent the variability of emissions within the pulp industry. Industry is currently conducting a test program and all data provided to the EPA in a timely manner will be considered for review and incorporation into the final regulatory alternatives. Development of the pulping model process units is discussed in Section 4.1.1, and development of the bleaching model process units is discussed in Section 4.1.2. Section 4.1.3 briefly discusses the assignment of pulping and bleaching model process units to pulp mills within the industry for estimating national emissions and control impacts.

4.1.1 Pulping Model Process Units

Existing literature and source test data were used to develop air emission factors, as presented in Appendices B and C and Chapter 2.0. These data were evaluated to determine which parameters of the pulping process affect HAP emissions. Table 4-1 identifies seven parameters that have an effect on HAP emissions. Some of these parameters (e.g., pulping process, wood type, and pulp production capacity) affect the nature and quantity of the HAP formed and, therefore, potentially emitted. Other parameters (e.g., washer type, and digestion process) affect the concentration and flow rate of the emission point vent streams and, therefore, affect the control of these streams.

Eighteen model units were developed to characterize the pulping process area.[1,2] Table 4-2 describes each model unit and presents total uncontrolled HAP emission factors. The uncontrolled HAP emission factors were developed from the sum of individual HAP compound emission factors for both process vent and wastewater emission points. Speciated HAP, total volatile organic compounds (VOC), and total reduced sulfur (TRS) emission factors are presented in Appendix C for each emission point for these 18 model process units. In addition, other vent stream and wastewater stream characteristics (e.g., flow rate and concentration) are presented in Appendix C. As shown in Table 4-2, the total uncontrolled HAP

TABLE 4-1. PULPING PROCESS CHARACTERISTICS AFFECTING EMISSIONS

Process characteristics	Process parameters
Chemical pulping process	Kraft/soda Sulfite Semichemical
Wood type	Softwood Hardwood
Digestion process	Batch Continuous
Washer type	Vacuum drum Improved washing[a]
Additional delignification	Oxygen delignification
Coproduct recovery	Turpentine Tall oil
Capacity	Pulp production capacity

[a] Horizontal belt, diffusion, and baffle washer systems affected emissions in a similar manner (i.e., enclosed versus open or hooded).

TABLE 4-2. PULPING MODEL PROCESS UNITS

Model process unit	Pulping type	Digestion type	Wood type	Chemical recovery	Washer type	Oxygen delignification (Yes or No)	Uncontrolled HAP emission factor[a] (kg/Mg pulp)
P-1	Kraft	Batch	Hard	Kraft	Rotary drum	No	5.02
P-2	Kraft	Batch	Soft	Kraft	Rotary drum	No	1.99
P-3	Kraft	Continuous	Hard	Kraft	Improved washing	No	4.90
P-4	Kraft	Continuous	Hard	Kraft	Rotary drum	No	5.05
P-5	Kraft	Continuous	Soft	Kraft	Improved washing	No	1.94
P-6	Kraft	Continuous	Soft	Kraft	Rotary drum	No	2.26
P-7	Sulfite	ND[b]	Soft	Sulfite	Rotary drum	No	1.51
P-8	Sulfite	ND[b]	Hard	Sulfite	Rotary drum	No	4.46
P-9	Semichem/ kraft	ND[b]	Soft	Kraft	Rotary drum	No	1.64
P-10	Semichem/ kraft	ND[b]	Soft	Sulfite	Rotary drum	No	1.05
P-11	Kraft	Continuous	Hard	Kraft	Improved washing	Yes	5.16
P-12	Kraft	Continuous	Soft	Kraft	Improved washing	Yes	2.23

TABLE 4-2. PULPING MODEL PROCESS UNITS (Continued)

Model process unit	Pulping type	Digestion type	Wood type	Chemical recovery	Washer type	Oxygen delignification (Yes or No)	Uncontrolled HAP emission factor[a] (kg/Mg pulp)
P-13	Kraft	Batch	Hard	Kraft	Improved washing	Yes	5.13
P-14	Kraft	Batch	Soft	Kraft	Improved washing	Yes	1.96
P-15	Sulfite	Batch	Hard	Sulfite	Rotary drum	Yes	4.68
P-16	Sulfite	Batch	Soft	Sulfite	Rotary drum	Yes	1.75
P-17	Kraft	Batch	Hard	Kraft	Improved washing	No	4.87
P-18	Kraft	Batch	Soft	Kraft	Improved washing	No	1.67

[a] Includes emissions from vent and wastewater streams (See Appendix C for model process unit emission factors by individual emission point and compound).
[b] ND = Not defined.

emission factors vary from 1.05 to 5.16 kg HAP/Mg of pulp for the model process units. Other than pulping capacity, the factor that most affects emissions is wood type, with hardwood emission factors (4.46 to 5.16 kg HAP/Mg) being greater than softwood emission factors (1.05 to 2.26 kg HAP/Mg). Based on available data, other parameters have little effect on total pulping process emissions.

4.1.2 Bleaching Model Process Units

Bleaching model process units were developed in a similar manner as the pulping model process units described in the previous section. The bleaching process characteristics determined to have the most effect on HAP emissions are wood type, chemical use, and pulp bleaching capacity. The use of hypochlorite, chlorine, or chlorine dioxide was determined to affect HAP emissions.

From a review of available emissions data, twelve model process units were developed to characterize the bleaching area.[1,2] Table 4-3 describes each of these model process units and presents the total uncontrolled HAP emission factors for each model. The twelve models represent six bleaching sequences for hardwood and six for softwood, with variations in chemical use.

The model emission factors presented in Table 4-3 represent the total uncontrolled bleach plant emissions from both process vents and wastewater. The process vents include the tower vent, washer vent, and seal tank vent for each bleaching stage. The wastewater emission points include the caustic sewer and acid sewer. As shown in Table 4-3, the bleach plant total HAP emission factors range from 0.56 to 2.11 kg HAP/Mg of pulp. Similar to pulping, the hardwood bleaching emission factors are generally higher than those for softwood. However, the greatest decrease in HAP emissions is achieved through the elimination of all chlorine and chlorinated compounds. Speciated HAP and total VOC emission factors and other stream characteristics for each emission

TABLE 4-3. BLEACHING MODEL PROCESS UNITS

Model process unit	Bleaching sequence (% ClO_2 substitution)[a]	Wood type	Uncontrolled HAP emission factor (kg/Mg pulp)
B-1	CEHD (0%)	Hard	1.98
B-2	CEHD (0%)	Soft	1.30
B-3	CEDED (0%)	Hard	1.75
B-4	CEDED (0%)	Soft	1.06
B-5	CdEDED (low)[b]	Hard	2.11
B-6	CdEDED (low)[b]	Soft	1.04
B-7	CdEDED (high)[c]	Hard	1.67
B-8	CdEDED (high)[c]	Soft	1.45
B-9	CdEDED (100%)	Hard	1.66
B-10	CdEDED (100%)	Soft	1.45
B-11	O-E[d]	Hard	0.56
B-12	O-E[d]	Soft	0.59

[a] Key:
- C = Chlorine
- Cd = Chlorine dioxide substituted for chlorine
- D = Chlorine dioxide
- H = Hypochlorite
- E = Extraction
- O = Oxygen/ozone

[b] A low substitution range is 10 to 50 percent substitution. Less than 10 percent is considered to have the same emissions as 0 percent substitution.

[c] A high substitution range is 50 to 90 percent substitution. Greater than 90 percent is considered to have the same emissions as 100 percent substitution.

[d] The totally chlorine free model bleaching sequence is used in conjunction with oxygen delignification in the pulping model process units.

point for the twelve model process units are presented in Appendix C.

4.1.3 Use of Model Process Units in Estimating National Emissions

To estimate emissions on a national level, model mills were constructed using combinations of the 18 model pulping and 12 model bleaching processes. The composition and distribution of these model mills were designed to approximate the structure of the U.S. pulp industry. A database (discussed in Chapter 6.0) was assembled that contains production information and the geographic location of each wood pulp mill in the United States. Production information (including capacity, wood type, digestion type, washing type, and bleach sequence) was used to assign appropriate model pulping and bleaching units to individual mills. Geographic location was used to determine baseline control levels from State regulations. Section 4.1.3.1 discusses how the model process units were assigned to pulping and bleaching lines at individual mills and Section 4.1.3.2 summarizes how emissions were estimated using these models.

4.1.3.1 Model Assignment. Pulping and bleaching model process units were assigned to pulp mills within the industry based on the criteria presented in Tables 4-2 and 4-3. Because a mill could contain more than one pulping or bleaching process, individual pulp and bleach lines were evaluated for each facility. A pulping line was defined as the digesters associated with a specific washer. In other words, each line contained only one washer, but could contain multiple digesters. The pulping and bleaching model process units were presented in Sections 4.1.1 and 4.1.2. These models were assigned on a pulp and bleach-line basis, and then aggregated to represent the whole facility for each facility in the industry data base.

4.1.3.2 Estimating Emissions. Uncontrolled emissions for model process unit emission points were calculated by multiplying the assigned emission factors by the process unit production capacity. If the mill reported control of specific points, or baseline controls were required by applicable State or Federal regulations, baseline emissions were estimated by adjusting the uncontrolled emissions with the documented emission reduction efficiency of the assumed or documented control device in place. As discussed in Chapter 3.0, process vents were assumed to use combustion technology or scrubbing (sulfite mills); and a 98 percent organic HAP reduction efficiency was applied. Applicable wastewater points were assumed to be controlled by a steam stripper achieving a 70 to 99 percent removal efficiency of individual HAP's, depending on the pollutants present. Applicable bleach plant points were assumed to be controlled by a scrubber achieving 0 to 99 percent removal efficiency of individual HAP's, depending on the pollutants present as discussed in Section 3.2.2.2 on gas absorbers. To obtain the total baseline emissions for a process unit, emissions from individual streams were summed in the same manner as for uncontrolled emissions. Chapter 2.0 provides details on the basis for baseline controls in the pulp and paper industry.

4.2 CONTROL OPTIONS

Four control options are discussed in this document. One option applies to all pulping vents, two options apply to bleaching vents, and one option applies to pulping wastewater streams. Due to the high cost and low air emission reductions, no control options are currently being evaluated for bleaching wastewater streams. Table 4-4 describes each option, the control requirements, and specific emission points to which the option applies.

The control option for pulping vent emission points is collection and conveyance to an existing combustion device such as a power boiler or lime kiln (or scrubbing for sulfite mills), assuming a 98-percent organic reduction. As discussed

TABLE 4-4. SELECTED CONTROL OPTIONS AND CONTROL TECHNOLOGY EFFICIENCY

Option	Costing basis	Control efficiency (% reduction)	Process area	Emission source	Emission points
Combustion: capture and conveyance to an existing combustion device	Individual conveyance of vents with combined combustion	100/98[a]	Pulping	Vents	• Digester blow tank gases • Digester relief gases • Washer[b] • Foam tank • Evaporator vent • Knotter[b] • O_2 Delignification blow tank • O_2 Delignification washer[b] • O_2 Delignification seal tank • Deckers/screens[b] • Weak black liquor storage tank
Scrubbing	Combined and individual control of vents	0-90[c]	Bleaching	Vent	• Bleach plant washer[b] • Bleach plant tower • Bleach plant seal tank
Combustion followed by scrubbing	Combined and individual control of vents	98/99[c,d]	Bleaching	Vent	• Bleach plant washer[b] • Bleach plant tower • Bleach plant seal tank
Steam stripper w/air emissions control device: conveyance to an existing combustion device	Combined and individual control of wastewater streams	80-99[e]	Pulping	Wastewater	• Digester blow tank condensates • Evaporator condensates • Evaporator, surface condenser condensates • Turpentine recovery underflow

[a] With sources requiring enclosure, a 100 percent capture efficiency is assumed. Combustion reduces captured organics by 98 percent. (All sources requiring capture are footnoted with "b".)
[b] Emission points may require enclosure because they are hooded or partially open to the atmosphere.
[c] The emissions reduction for this control technology is variable and dependent on the solubility of the compound in the scrubbing medium and the volatility of the organic HAP's present.
[d] Ninety-eight percent reduction of organics/99 percent reduction of acid gases.
[e] The removal efficiency and emissions reduction for this control technology is variable and dependent on the volatility of the organic HAP's present.

in Chapter 3.0, these controls are currently being applied to some existing vent streams at most facilities. (Combustion of pulping vents in a stand-alone incinerator is possible, but for this option existing combustion devices were selected.) Capture is also necessary for those emission points that are hooded or partially open to the atmosphere (washers, knotters/screens, and deckers). As discussed in Chapter 3.0, complete capture was assumed to be achieved with enclosure of these points.

One control option for bleaching vent emission points is caustic scrubbing which achieves a weighted average of 70 percent reduction for organics and 99 percent reduction for chlorine.[3] A second control option for bleaching vent emission points is scrubbing the vent stream first, then ducting the scrubber off-gas to a combustion device. However, this control option only achieves an average total HAP reduction of 75 percent.[3] A third control option for bleaching vent emission points is thermal incineration followed by caustic scrubbing to achieve 98 percent reduction for organics and 99 percent reduction for chlorine and hydrochloric acid.

The control option for pulping wastewater emission points is collection of wastewater streams at the point of generation, handling in an enclosed collection system, and steam stripping to achieve an 80 to 99 percent organic reduction. The overheads from the stripper are assumed to be conveyed to an existing combustion device. As discussed in Chapter 3.0, the design steam stripper control efficiency is dependent on the volatility of the HAP's present in the wastewater stream.

4.3 ENVIRONMENTAL IMPACTS

This section presents the environmental impacts of applying the control options discussed in Section 4.2 to an example facility. These impacts have been revised from the preliminary draft BID based on internal review, and address most, if not all, of the comments provided by industry. The

example facility selected is a kraft hardwood pulping facility with batch digestion, rotary vacuum drum washing, and a CEHD sequence bleach plant (designated in Appendix C as pulping model P1 and bleaching model B1.)

Table 4-5 presents a summary of the total uncontrolled HAP emissions for this mill that pulps 1,000 air-dried tons per day. The uncontrolled HAP emissions are presented as total emissions for the pulping emission points and total emissions for bleaching emission points, as well as a total for the entire mill. In addition to uncontrolled emissions, baseline HAP emissions are presented in Table 4-5. These baseline emissions were estimated assuming that its digester relief, blow gases, and evaporator noncondensibles are combusted. No other baseline controls were assumed for this example. As discussed in Section 4.1, in estimating national emissions and control impacts, baseline control levels were considered in a plant-specific analysis.

This section presents the environmental impacts for application of the previously defined control options on this example mill. Section 4.3.1 presents the primary and secondary air impacts of these control options. Section 4.3.2 presents the energy impacts. Water impacts and other impacts are described in Sections 4.3.3 and 4.3.4, respectively.

4.3.1 Air Impacts

This section presents the primary and secondary air impacts resulting from the application of all control options, discussed in Section 4.2, on the example pulp mill. Primary air impacts include the reduction of HAP, VOC and TRS emissions directly attributed to the control option. Secondary air impacts evaluated are the increased criteria pollutant emissions resulting from steam generation for steam stripping, from auxiliary fuel combusted in the incinerator, and from combustion of vent streams.[4]

Table 4-6 presents primary air impacts for the example mill, by control option (as presented in Section 4.2). The

TABLE 4-5. UNCONTROLLED EMISSIONS FOR AN EXAMPLE FACILITY[a]

Line No.	Process Type	Line Capacity (ADTPD)	Assigned model process unit[b]	Total uncontrolled HAP emission factor (kg/Mg pulp)[b]	Total uncontrolled HAP emissions (Mg/yr)[c]	Baseline HAP emissions (Mg/yr)[d]
1	Pulping	1000	P1	4.39	1400	1360
2	Bleaching	1000	B1	1.98	630	630
	Total Mill			6.37	2030	1990

a Kraft hardwood pulping with batch digestion rotary vacuum drum washing and a CEHD bleach plant.
b Definition of pulping and bleaching models and total uncontrolled HAP factors as presented in Tables 4-2 and 4-7.
c HAP Emissions (Mg/yr) = capacity (air dried tons/day) * HAP emission factor (kg/Mg pulp)*(Mg/1.1 tons) * (Mg/1000 kg) * (350 days/yr).
d Assumes digester relief and blow gases and evaporator noncondensibles are being combusted at baseline.

TABLE 4-6. PRIMARY AIR IMPACTS FOR AN EXAMPLE MILL

Emission Source Type	Baseline Emissions (Mg/yr)[a]			Control Option	Emission Reduction (%)			Emission Reduction[b] (Mg/yr)		
	HAP	VOC	TRS		HAP	VOC	TRS	HAP	VOC	TRS
Pulping Vents	160	1160	570	Collection and Combustion[c]	98%[d]	98%[d]	98%[d]	150	1090	520
Bleaching Vents	550	420	0	Scrubbing[e]	70%[f]	70%[f]	NA	380	290	NA
				Incineration and Scrubbing[g]	98-99%[h]	98%[h]	NA	540	410	NA
Pulping Wastewater	1200	1300	270	Steam stripping[i]	90%[j]	90%[j]	94%[j]	1080	1200	250

a Baseline emissions assume control of digester relief and blow gases and evaporator noncondensibles using a combustion device with 98 percent efficiency. Emissions calculated from uncontrolled emission factors for an example 1000 ton/day kraft hardwood pulp mill with batch digestion, rotary vacuum drum washing, and a CEHD bleach plant using the following equation:

Emissions (Mg/yr) = 1000 (air dried tons/day) * (Uncontrolled emission factor + 1-0.98 * Emission factor for baseline controlled points [kg/Mg air dried pulp]) * (Mg/1.1 tons) * (Mg/1000 kg) * 350 (days/year)

b Emission reductions represent additional emission reductions beyond the baseline control level.

c Assumes capture and combustion of emissions from digester blow tank, digester relief gases, brownstock washer, brownstock foam tank, evaporator vent knotter, deckers/screens, and weak black liquor storage.

d Combustion reduces captured organics by 98%.

e Assumes tower, washer, and seal tank vents from all four stages are scrubbed.

f Percent emission reduction as follows: 99% chlorine, 99% Hcl, 70% methanol, 70% average for other HAP.

g Assumes tower, washer, and seal tank vents from all four stages are incinerated and scrubbed.

h 98% reduction of organics/99% reduction of acid gases.

i Assumes digester blow condensates and evaporator foul condensates are steam stripped.

j Percent emission reduction as follows: 90% methanol, 99% MEK, 94% TRS, 90% average for other HAP.

table presents uncontrolled and baseline emissions of HAP, VOC and TRS from pulping vents, bleaching vents and pulping wastewater. Estimated emission reductions for the different control options were calculated for these vent and wastewater streams and are presented in Table 4-6. For the control options selected, the pollutant removal efficiencies vary from 70 to 99 percent for total HAP, total VOC, and TRS, as shown in the table.

Table 4-7 presents secondary air pollution impacts for the same example mill.[4] As shown in Table 4-7, the greatest secondary impacts occur from the generation of steam used in steam stripping the pulping wastewater streams. Annual impacts of 63 Mg/yr sulfur dioxide, 172 Mg/yr carbon monoxide, and 123 Mg/yr nitrogen oxides were estimated to be generated from steam production for this option.[4] The secondary impacts were estimated based on calculating the amount of fuel required to generate the steam and the increase in criteria pollutants based on literature values.[4,5]

The impacts associated with combustion of pulping vents, including steam stripper overheads, were determined to be negligible (with the exception of sulfur dioxide from the combustion of TRS in the vent streams). All HVLC vent streams were assumed to be used as combustion air for existing on-site combustion devices, with no significant effect on the fuel usage requirements, while LVHC vent streams were assumed to be used as auxiliary fuel.[4] The sulfur dioxide impact was estimated based on the amount of total reduced sulfur in the vents requiring control. Although the additional moisture added to the combustion device will result in additional fuel requirements, the addition of organics to these combustion devices from the vent streams offsets the associated fuel requirements.[6]

Scrubbing bleach plant vent streams was assumed to have no impact on secondary air emissions; however, incineration followed by scrubbing of these vent streams will result in secondary air pollution impacts, resulting from the combustion

TABLE 4-7. EXAMPLE MILL SECONDARY AIR POLLUTION IMPACTS

Emission Source Type	Control Option[a]	Emissions (Mg/yr)[b,c]				
		PM	SO_2	CO	NO_x	VOC[d]
Pulping Vents	Collection and Combustion[e]	0	67	0	0	0
Bleaching Vents	Scrubbing	0	0	0	0	0
	Incineration and Scrubbing[f]	1.7	0.3	23	310	0
Pulping Wastewater	Steam Stripping[g]	.2	27	5	20	0

a Sources being controlled are defined explicitly in Tables 4-5 and 4-6.
b Reference 4.
c Criteria pollutant emissions calculated for an example 1,000 tons/day kraft hardwood pulp mill with batch digestion, rotary drum washing and a CEHD bleach plant.
d VOC generated from the control devices.
e Includes SO_2 resulting from incineration of TRS from pulping vents not controlled at baseline: washer vent and washer foam tank vent. These are HVLC vents routed to a power boiler assumed to be equipped with a venturi scrubber achieving 90 percent SO_2 emissions reduction.
f Criteria pollutant emission rates ignore any potential emission reduction of PM or SO_2 emissions that might occur as a result of scrubbing.
g Includes SO_2 resulting from incineration of TRS from wastewater streams not controlled at baseline: digester blow and evaporator foul condensates. The resulting steam stripper overheads are routed to a power boiler assumed to be equipped with a scrubber achieving 90 percent SO_2 emissions reduction and 90 percent PM emission reduction.

of these gases in a stand-alone incinerator. In addition, secondary air impacts from the combustion of auxiliary fuel is included.

Figure 4-1 graphically presents the primary and secondary of these gases in a stand-alone incinerator. In addition, secondary air impacts from the combustion of auxiliary fuel is included. air pollution impacts shown in Tables 4-6 and 4-7 for this example mill. The combined impacts for the control options for pulping and bleaching vents and pulping wastewater are shown in the figure. The control option selected for bleaching vents depicted in Figure 4-1 is scrubbing only (i.e., the impact for incineration followed by scrubbing is not shown).

4.3.2 Energy Impacts

The control options evaluated require additional energy in the form of electricity to operate fans and pumps, and additional fuel to generate steam and to combust bleach plant vents. Table 4-8 presents these energy impacts for the example mill, broken down by pulping vents, bleaching vents, and pulping wastewater control options.[4] As stated previously, no additional fuel requirement was assumed for combustion of pulping vent streams; however, additional energy will be required to transport the vent streams from the point to the combustion device.

The amount of electricity required to operate the fan or blower is estimated by calculating the horsepower required to transport the vent stream. Electricity to operate fans and pumps for operating scrubbers and steam strippers was calculated in a similar manner. When an incinerator is used to control HAP emissions from bleach vents, auxiliary fuel is required to sustain combustion. The auxiliary fuel was estimated based on the combustion temperature, VOC content of the stream, and volumetric flow rate. When a steam stripper is used, auxiliary fuel is required for the generation of the steam. The fuel requirement was estimated based on the steam requirements.

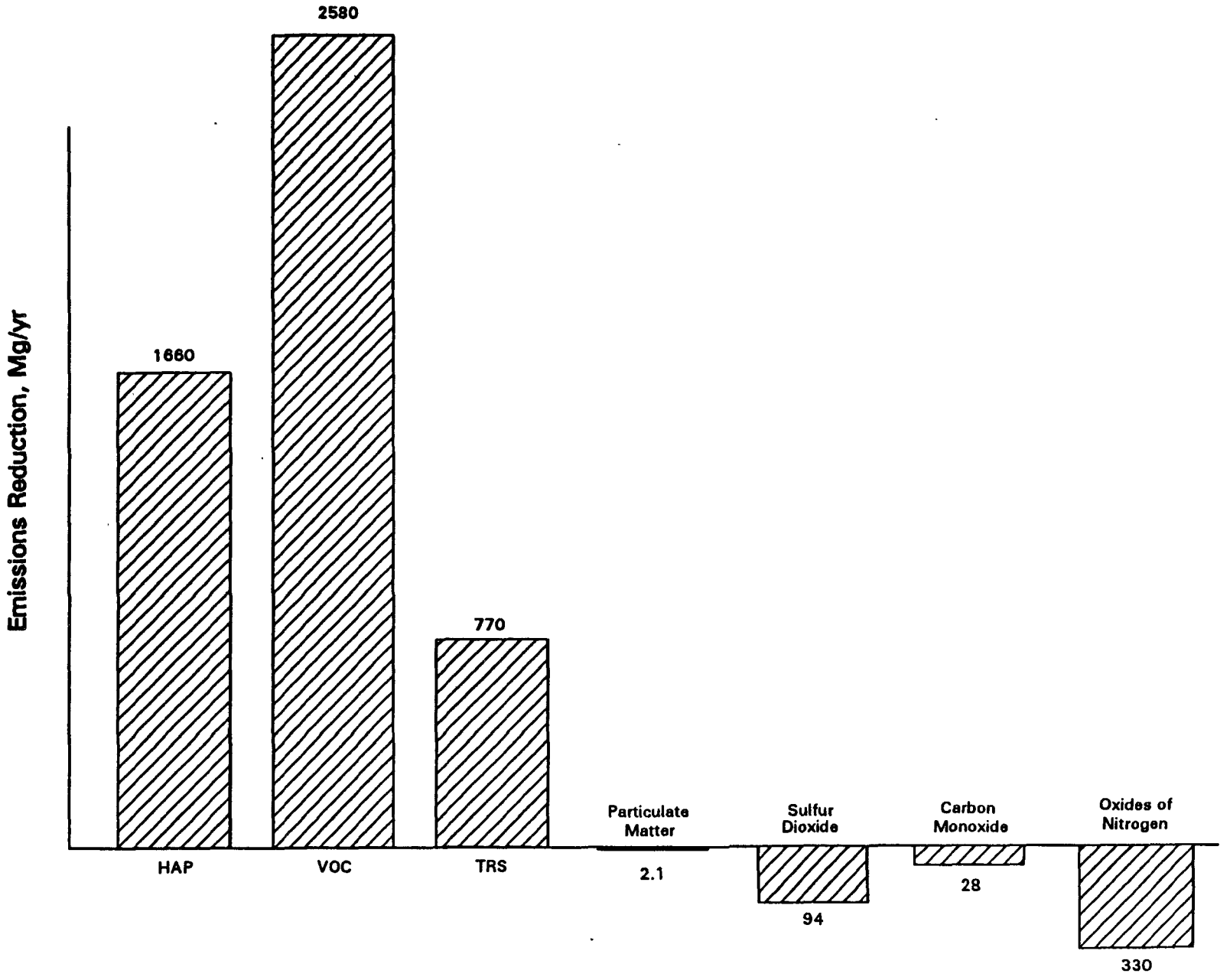

Figure 4-1. Example Mill Air Pollution Impacts

7228165RTP

TABLE 4-8. EXAMPLE MILL ENERGY IMPACTS[a,b]

Emission Source Type	Control Option[c]	Electricity (MMBtu/yr)	Auxiliary fuel (natural gas) (MMBtu/yr)	Auxiliary fuel required for steam generation (MMBtu/yr)	Total
Pulping Vent	Collection and Combustion	3,900	NA[d]	NA	3,900
Bleaching Vent	Scrubbing	9,500	NA[d]	NA	9,500
	Incineration and Scrubbing	9,500	1,050,000	NA	1,060,000
Pulping Wastewater	Steam Stripping	3,000	NA[d]	290,000	293,000

a Reference 4.
b Energy impacts calculated for an example 1,000 ton/day kraft hardwood pulp mill with batch digestion, rotary vacuum drum washing and a CEHD bleach plant.
c Sources being controlled are defined explicitly in Table 4-6.
d Additional fuel required from the moisture (above ambient combustion air) in these vent streams is offset by the fuel value of the vent streams.
NA = Not applicable.

The greatest impacts are incurred with incineration and scrubbing of bleaching vents, representing approximately 1.1×10^{12} Btu/year for the example mill. The next largest energy impact results from the generation of steam, used in steam stripping pulping wastewater streams; however, this fuel requirement is less than the fuel requirement for incineration of bleach plant vent streams.

4.3.3 Water Impacts

The water impacts associated with the control options discussed in this section are being evaluated quantitatively by EPA's Office of Water as part of the joint rulemaking effort, however, this section presents a qualitative discussion of the potential water impacts associated with these control options.

Control of pulping vents through collection and combustion in an existing combustion device was determined to have no impact on water pollution. Any condensates in the vent stream collection system can be returned to the weak black liquor recovery system or to the condensate steam strippers. Scrubbing of bleach plant vent streams will contribute approximately 1.5 pounds of sodium chloride to the wastewater (5 to 40 ppmw); however, this quantity is small compared to baseline total dissolved solids quantities.[7] Steam stripping of pulping wastewater streams will positively effect the quality of the pulp mill effluent, specifically methanol loading reductions. Lower methanol loadings will, consequently, reduce the biological oxygen demand loading.

4.3.4 Other Impacts

Other impacts considered for the control options discussed in this section include noise, visual impacts, odor impacts, solid waste impacts, and irreversible and irretrievable commitment of resources. Although some of the add-on control equipment will increase the noise level in a pulp mill, the incremental noise increase will be small compared to background levels. The increased noise levels

will occur from fans and pumps used to transport the vent streams and wastewater streams to the control devices. No visual impacts associated with the control options, however, a positive odor impact will result from the additional reduction in the malodorous total reduced sulfur compounds emissions. No expected secondary solid waste impacts associated with the control options discussed in this section. Any waste generated from steam strippers or scrubbers should be manageable within the existing waste treatment process. No significant increase in incinerator ash is expected. No irreversible or irretrievable commitments of resources associated with these control options have been identified.

4.4 REFERENCES

1. Memorandum from Olsen, T.R., and P.B. Murphy, Radian Corporation, to Lassiter, P.E., EPA/CPB. Database development and model approach. January 27, 1992.

2. Memorandum for Olsen, T.R., Radian Corporation, to Shedd, S.A., EPA/CPB. Revised Model Process Units for the Pulp and Paper NESHAP. September 21, 1993

3. Memorandum from Olsen, T.R., Radian Corporation, to Shedd, S.A., EPA/CPB. Model Scrubber Removal Efficiencies. September 17, 1993.

4. Memorandum from Bagley, C.J., Radian Corporation, to Shedd, S.A., EPA/CPB. Secondary Impacts. September 24, 1993.

5. Compilation of Air Pollutant Emission Factors. Volume I, Stationary Point and Area Sources. Fourth Edition. U.S. Environmental Protection Agency, Office of Air Quality Planning and Standards. Research Triangle Park, NC. Publication No. EPA/AP-42. Section 10.0. October 1986.

6. Memorandum from Greene, D.B., Radian Corporation, to Project File. Fuel Penalty. October 8, 1993.

7. Memorandum from Olsen, T.R., Radian Corporation, to Shedd, S.A., EPA/CPB. Pulp and Paper NESHAP Selection of Bleach Plant Scrubber Design and Costs. October 8, 1993.

5.0 ESTIMATED CONTROL COSTS

This chapter presents the approach taken to estimate the cost of controlling hazardous air pollutant (HAP) and volatile organic compound (VOC) emissions from the pulp industry as discussed in Chapters 2.0, 3.0, and 4.0. This chapter discusses the assumptions used for sizing the control technologies for each emission point, the method of estimating costs for control technologies (Section 5.1), and the estimated costs for an example facility (Section 5.2). Table 5-1 presents a summary of the elements included (enclosures, combustion devices, scrubbers, and steam strippers) in the control cost analysis for the emission points identified in previous chapters.

5.1 CONTROL COSTS

This section presents the methodologies used to determine the cost of controlling vent and wastewater emission points in model mills that are used to represent the pulp industry. The approach used to size and cost the control technologies was dictated by the EPA OAQPS Control Cost Manual (OCCM). This manual uses conservative estimates of design parameters where specific industry data are not available; thus, resulting cost estimates can be conservative (high). Consequently, significant changes in costs are not expected, and therefore, decisions made based on these preliminary analyses are valid. Sections 5.1.1 and 5.1.2 discuss costs for enclosures and vent gas conveyance systems. The control technology costs, including thermal incineration, scrubbing, and steam stripping, are discussed in Sections 5.1.3, 5.1.4, and 5.1.5. In each section, design assumptions, design parameters affecting costs, as well as estimated costs are presented.

TABLE 5-1. ELEMENTS INCLUDED IN CONTROL COST CALCULATIONS FOR VARIOUS POINTS/DEVICES

Emission point	Enclosure	Ductwork/ conveyance	Combustion devices[a]	Scrubber[b]	Steam stripper[c]
Pulping vents					
Digester relief gas		X	X		
Digester blow gases		X	X		
Knotters	X	X	X		
Pulp washers	X	X	X		
Deckers/screens	X	X	X		
Washer foam tank		X	X		
Evaporator vent		X	X		
Weak black liquor storage tank vent		X	X		
Oxygen delignification blow tank		X	X		
Oxygen delignification washer vent		X	X		
Bleaching vents					
Tower vents		X	X	X	
Washer vents		X	X	X	
Seal tank vents		X	X	X	
Pulping wastewater streams[d]		X	X		X

[a] For pulping vents, existing combustion devices were assumed to be applicable; however, stand-alone incinerators were considered for bleaching vents. The vent gas from the wastewater steam strippers was assumed to be combusted in an existing combustion device.
[b] Scrubbers were considered for bleach plant vents in two control options: as the primary control device; and as a secondary control following incineration.
[c] Including collection and transport of wastewater to steam stripper.
[d] The overheads from the steam stripper are conveyed to an existing combustion device.

5.1.1 Enclosure Costs

As shown in Table 5-1, the emission points that will require enclosures before an end-of-pipe control device can be used are the pulp washers, the knotters, and the screens/deckers. Enclosing these points reduces the volumetric flow rate typically associated with capture of the emissions and will increase the overall capture of VOC and HAP. Factors considered in estimating enclosure costs include the size of the enclosure, the materials of construction, and the need for equipment access. It should be noted that some washer designs, such as diffusion washers, do not require enclosures due to their design.

The costs for enclosing the systems (model washers, etc.) were developed based on vendor quotes for enclosures installed on pulp washers.[1] The enclosures are assumed to be a close-fitting panel hood design. Vendor cost quotes were obtained for enclosures constructed of fiber reinforced plastic (FRP) and designed to allow equipment access. An approximate purchased equipment cost of $40,000 was assumed for each enclosure at a typical (i.e., 1000 ton per day) mill. Additional supports are required for the close-fitting panel hood when designed for a rotary vacuum pulp washer to support the weight of the hood and to provide structural support for access openings. A washer line consisting of three rotary vacuum washer drums was assumed to require three enclosures, with two additional supports at $12,000 per set.[1] It was assumed that screens, knotters, and deckers each exist as single units, and require a single enclosure. For mills with larger capacities, it was assumed that multiple lines/units would be used and would require additional enclosures.

Direct and indirect installation costs were assumed to be 50 percent of the purchased equipment costs; therefore, the total capital investment was estimated to be 150 percent of the purchased equipment cost. The resulting total capital investment for enclosures in 4th Quarter 1991 dollars is approximately $64,000 for each screen, knotter and decker, and

$230,000 for washers. The costs were annualized assuming a 10 year equipment life at 10 percent interest rate. The resulting total annual costs (TAC) equal $10,400 for each screen, decker, and knotter and $37,500 for washers.

5.1.2 Ductwork and Conveyance Costs

Ductwork is used for the conveyance of vent streams from discrete points or from enclosures to the control devices discussed in Chapter 3.0. It was assumed that the mill would combine vent streams and send them through a single duct to the control device; therefore, the ductwork system was sized to allow multiple emission points from a process area (i.e., knotter and pulp washers) to be routed together to be conveyed through a common ductwork system.

5.1.2.1 Ductwork Design Considerations Affecting Cost. The ductwork system consists of the following equipment: ductwork and elbows, fan, knock-out drum(s), flame arrestor(s), rupture discs, supports, and insulation. Table 5-2 presents the assumptions used to calculate ductwork costs for venting pulping streams to an existing combustion device.

A minimum duct diameter of 8 inches was chosen to represent the smallest reasonable duct diameter from low-flow points. The main header diameter was based on the cumulative stream flow rate and an assumed maximum velocity through the duct (3,000 feet per minute) for combined vent streams.[2,3] The duct was assumed to have an overall length of 1,000 feet from the emission points to the combustion device based on site visits and mill teleconferences. For the flue gas from the combustion device to the scrubber, the overall duct length was assumed to be 300 feet, and for bleach plant emission points to a stand-alone scrubber, the overall duct length was assumed to be 100 feet. For this preliminary analysis, it was assumed that the cost of a large, constant diameter duct would approximate actual costs incurred by scaling up duct diameters with transition pieces. A comparison of these assumptions for a model mill is discussed in a separate memorandum.[2]

TABLE 5-2. DUCTWORK GENERAL DESIGN SPECIFICATIONS FOR VENTING TO AN EXISTING COMBUSTION DEVICE

Item	Specification	Design and Cost references
Minimum duct diameter	8 inches[a]	
Target pressure drop	20 to 40 inches of water	2
Maximum duct velocity	3,000 feet per minute	3
Duct length	1,000 feet[a]	2
Number of elbows per 100 feet of duct	2[a]	2
Fans per duct	1	2,5
Flame arrestor per duct	1	6
Knockout drum per duct	1	2
Number of rupture discs per 100 feet of duct	1	7
Thickness of steel	16 gauge	4

[a] Based on site visits to several mills.

5.1.2.2 Development of Ductwork Capital Costs. Duct and elbow cost equations were developed for carbon steel and adjusted to reflect the cost difference of stainless steel.[2,4] Additional costs were included for the fan, supports, insulation, knockout drum(s), flame arrestor(s), and rupture discs.[5,6,7,8] For bleaching vents controlled by an incinerator followed by a scrubber, a quench chamber is used to cool the stream. The halogenated streams from the combustion device are conveyed to the quench chamber by stainless steel ducts. After the incinerator gases are cooled by the quench chamber, FRP duct is used to convey the gases to the scrubber. To determine costs, an FRP multiplier is used in place of the stainless steel multiplier. The total capital investment was estimated as 3.02 times the sum of the individual purchased equipment costs to account for direct and indirect installation costs, including retrofit costs.[9,10]

5.1.2.3 Development of Ductwork System Annual Cost. Annual costs for the ductwork system include utility and maintenance costs, as well as annualized capital charges. It was assumed that an increase in operating labor due to the ductwork is insignificant.

Electricity is the only utility cost considered. The electricity requirement for the fan was calculated from the vent gas flow rate and the estimated pressure drop through the duct system and a cost of electricity of $0.04 per kilowatt-hr ($0.04/kW-hr).[11]

Maintenance material and labor are included under maintenance costs. Maintenance labor requirements are assumed to be 0.5 hour of labor per 8-hour shift. Maintenance material costs are assumed to be equal to maintenance labor costs.[12]

The annualized capital charges include capital recovery charges as well as taxes, insurance, administrative, and overhead charges. The capital recovery cost assumes a 10-year duct life and 10 percent interest rates, and is calculated using the following equation:

$$\text{Capital recovery cost} = \text{Total capital investment} * \text{Capital recovery factor (10 years, 10\%)}$$

Taxes, insurance, and administrative costs are assumed to be 4 percent of the total capital investment. Overhead is conservatively estimated to be 60 percent of the total labor and maintenance costs.[12]

5.1.3 Thermal Incineration System Costs

Thermal incinerator costs were developed using the cost equations presented in Chapter 3.0 of the OCCM.[13] As discussed in Chapters 3.0 and 4.0 of this document, a thermal incinerator may be used to control HAP and VOC emissions from halogenated bleaching vent streams. Thermal incinerators may also be used to control pulping vent streams if desired; however, for this analysis it was assumed that pulping vent streams would be controlled by an existing combustion device. Costs for a thermal incinerator for an example bleaching process are given in Section 5.2, and the design consideration for halogenated streams are given below.

5.1.3.1 Thermal Incinerator Design Considerations Affecting Costs. The thermal incinerator system for halogenated streams consists of the following equipment: combustion chamber, instrumentation, blower, collection fan, ductwork, and stack. The OCCM contains further discussion of incinerator control system design.[13] General thermal incinerator design parameters are presented in Table 5-3. Other key variables that affect costs are: vent stream flow rate and type of heat recovery (capital costs) and vent stream flow rate, vent stream heat content, and fuel requirements (annual costs).

The amount of oxygen in the vent stream or bound in the VOC establishes the supplemental combustion air requirement. In pulp mills (including pulping and bleaching vents), most of the vent streams are dilute streams and contain an oxygen percentage sufficient to support combustion.[14] Therefore,

TABLE 5-3. THERMAL INCINERATOR GENERAL DESIGN SPECIFICATIONS FOR HALOGENATED VENT STREAMS

Item	Specification
Emission control efficiency	98 percent or greater destruction of VOC
Minimum incinerator capacity[a]	500 scfm
Maximum incinerator capacity	50,000 scfm
Incinerator temperature	1,100 °C (2,000 °F)
Chamber residence times	1.00 sec
Supplemental fuel requirement	Natural gas required to maintain incinerator temperature

[a] Five hundred scfm is the minimum incinerator size used to determine capital cost.

for pulp mill vent streams, supplemental combustion air is not expected to be required. In fact, certain pulping vent gases, such as digester relief and blow gases, may have heat contents greater than approximately 100 Btu/scf due to the presence of turpentine compounds. In such cases, the vent stream may be used as supplemental fuel in combustion devices.[15] (See Chapter 3.0 for discussions on vent streams and their heat contents.)

The minimum and maximum incinerator flow rate for this cost analysis were 500 and 50,000 scfm, respectively. Flow rates greater than 50,000 scfm were assumed to be controlled by multiple incinerators.

Halogenated vent streams were not considered to be candidates for heat recovery systems and were costed assuming zero percent heat recovery. This design assumption was imposed because of the potential for corrosion in the heat exchanger and incinerator. Based on an analysis of chlorine, chlorine dioxide, extraction, and hypochlorite bleach plant stages, vent streams that would likely contain higher concentrations of halogens would be from the hypochlorite stage (chloroform) and the chlorination stage (chlorine). If the temperature of the flue gas leaving the heat exchanger were to drop below the acid dew point temperature for these vent streams, acid gases would condense. In cases such as bleaching vents steams where heat is not recovered, the annual fuel costs would be higher than for cases where heat recovery is practiced, other factors being held constant.

The destruction of VOC's is a function of incinerator temperature, residence time in the combustion chamber, and concentration of VOC's in the vent stream. Since these parameters affect capital and annual costs, their values had to be established. Previous EPA studies show that at least 98 percent destruction efficiency can be met in a thermal incinerator operated at a temperature of 1600°F and a residence time of 0.75 seconds.[16] Thermal oxidation of

halogenated VOC requires higher temperatures. Available data indicate that a temperature of 2,000°F and a residence time of one second are necessary to achieve at least 98 percent VOC destruction efficiency for halogenated vent streams.[17]

Auxiliary fuel will almost always be necessary for start-up of the unit. Also, in most cases, additional fuel must be added to maintain the incinerator temperature. With the following assumptions, the amount of auxiliary fuel required was estimated using the heat and energy balance around the combustion chamber.[18]

- The reference temperature is taken as the inlet temperature of the auxiliary fuel (77°F).
- No auxiliary combustion air is required (i.e., it is assumed that the oxygen content of the vent stream is at least 18 percent).
- Energy losses are assumed to be 10 percent of the total energy input to the incinerator above ambient conditions.
- At a constant moisture content, the heat capacities of the bleach plant vent streams entering and leaving the combustion chamber are approximately the same regardless of composition of the organics. This is true for waste streams which are dilute mixtures of organics in air, the properties of the streams changing only slightly on combustion.

These assumptions and subsequent calculations of the fuel requirements for a model vent stream are presented in a separate document.[19]

5.1.3.2 Development of Thermal Incinerator Capital Costs. The cost analysis for thermal incinerators presented below follows the methodology outlined in the OCCM. Equipment cost correlations are based on data provided by various vendors; each correlation is valid for incinerators in the 500 to 50,000 scfm range.[20] Thus, the smallest incinerator size used for determining equipment costs is 500 scfm; for flow rates greater than 50,000, additional incinerators are costed.

Equipment costs are given as a function of total volumetric flow through the incinerator and are accurate to within 30 percent. For halogenated streams, the equation used in the costing analysis, after converting to 4th Quarter 1991 dollars, is as follows:[21]

$$EC = 10{,}930\ Q_{TOT}^{0.2355}$$

where:

EC	=	Equipment costs (4th Quarter 1991 dollars); and
Q_{TOT}	=	Total volumetric flow rate through the incinerator including any additional air and fuel.

The cost for the conveyance of bleaching process vent streams to the incinerator is not included in the incinerator equipment cost. The methodology for calculating costs for the conveyance system for an incinerator is presented in Section 5.1.2.

Installation costs are estimated as a percentage of purchased equipment costs and include auxiliary equipment, instrumentation, sales taxes, and freight. Direct and indirect installation costs for thermal incinerators have been incorporated into the total capital investment. The total capital investment is estimated at 1.61 times the purchased equipment cost.

5.1.3.3 Development of Thermal Incinerator Total Annual Cost. Annual costs for the incinerator system include direct operating and maintenance costs, as well as annualized capital charges. The bases for determining thermal incinerator annual costs are presented below.

The utilities considered in the annual cost estimates include natural gas (auxiliary fuel) and electricity (incinerator fan). The fuel and electricity costs were assumed to equal $3.48 per 1,000 cubic feet of natural gas and $0.04/kW-hr, respectively. The procedure for estimating the

electricity requirement is described in Chapter 3.0 of the OCCM.[13] The procedure for estimating the natural gas requirement was presented in Section 5.1.3.1.

For this cost analysis it was assumed that the incinerator requires 0.5 hour of operating labor per 8-hour shift. Maintenance labor requirements are assumed to be identical to operating labor requirements. Supervisory cost is estimated to be 15 percent of the operating labor cost.[22] Maintenance material costs are assumed to be equal to maintenance labor costs.

The annualized capital charges include capital recovery charges as well as taxes, insurance, administrative and overhead charges. The capital recovery cost was calculated as described in previous sections. Taxes, insurance, and administrative costs were assumed to be 4 percent of the total capital investment. Overhead was estimated to be 60 percent of the total labor and maintenance costs.[23]

5.1.4 Scrubber System Costs

Scrubber costs were developed for two scenarios. Scrubber systems were applied as secondary control to remove acid gases from the incinerator exhaust after combustion of halogenated bleach plant streams (i.e., post-incineration scrubbers). Scrubbers were also used as a primary control for bleach plant vent streams, without incineration (i.e., stand-alone scrubbers). (However, based on recent industry comments, stand-alone scrubbers could be acting as emission points for methanol. Scrubber effluent could also emit volatile HAP's.) Design considerations for the two scrubbing scenarios described above are presented in the following two sections.

5.1.4.1 Post-Incineration Scrubber Design Considerations Affecting Costs. Scrubber systems consist of the following major equipment: quench chamber, packed tower, pump, ductwork, and fan. Post-incineration scrubber systems are designed to remove acid gases formed during combustion of halogenated organics. System elements and design assumptions

specific to this analysis are based on a waste gas stream (i.e., incinerator exhaust) with hydrochloric acid (HCl) as the most prevalent pollutant.

General scrubber design specifications are presented in Table 5-4. Column diameter and height are the primary design parameters that affect the capital cost of the scrubber. These design parameters establish the column shell geometry and the amount of packing required. The design procedure assumes no heat effects are associated with the absorption process and that both the gas and liquid streams are dilute. The liquid-to-vapor flow ratio is calculated from the inlet and outlet gas and liquid stream flow rates and is assumed to be constant through the scrubber.

The column diameter was estimated based on mass transfer equations in the literature,[24,25,26,27,28,29,30] using characteristics of the model vent stream, the absorption liquid (caustic solution), the packing material,[31] and an assumed column flooding condition of 60 percent. For this analysis, the diameters ranged from 3 to 15 feet, depending on the flow rate of the model vent streams. A detailed discussion of design procedures is presented in Chapter 9 of the OCCM.[32]

The height of the packed column was calculated by determining the number of theoretical transfer units required to obtain the desired removal efficiency and multiplying by the height of a transfer unit. The number of overall transfer units was estimated using the equilibrium-operating line graph, based on inlet and outlet conditions. For this analysis, the column height was approximately 30 feet.

5.1.4.2 <u>Stand-Alone Scrubber Design Considerations Affecting Costs</u>. The stand-alone scrubber system consists of the same major equipment as the post-incinerator scrubber system. The design assumptions were based on reported industry chlorine and chlorine dioxide gas scrubbers.[33] Information on one scrubber indicated that 99 percent chlorine reduction was being achieved using a five percent caustic

TABLE 5-4. DESIGN PARAMETERS FOR POST INCINERATION SCRUBBER SYSTEM

Parameters	Values
Waste gas flow rate entering absorber	400 to 80,000 scfm[a]
Temperature of waste gas stream (prior to quench chamber)	2,000 °F[a]
Pollutant in waste gas	HCl
Concentration of the Hcl entering absorber in waste gas	100 to 15,000 ppmv
HCl removal efficiency	99 percent (molar basis)
Scrubbing liquid	Caustic solution (white liquor, E-stage filtrate), 5 gal/1000 ft^3
Packing type	2-inch ceramic saddles or Raschig rings

[a] The incinerator off-gas passes through a quench chamber which reduces the waste gas flow rate and temperature prior to entering the duct to the scrubber.

solution (sodium hydroxide). Most scrubbing solutions were from existing caustic sources, such as white liquor, E-stage filtrate, and weak wash, and based on available information, scrubbers using these media can also achieve a 99 percent reduction in chlorine. An existing source of caustic solution was assumed for this costing analysis. For the cost analysis, the liquid to gas ratio and column height were given based on analysis of actual scrubber data and the diameter was varied based on a vent stream flow of 53 lb-mole per hour cubic foot through the column.

General scrubber design specifications are summarized in Table 5-5. The detailed design procedure used to select the stand-alone scrubber variables is described in a separate memorandum.[19] Costs were estimated for a scrubber system from cost factors provided in Chapter 9 of the OCCM.[34] The diameter for the scrubber ranged from 4 to 18 feet for systems scrubbing vent streams from 2,000 to 80,000 scfm. The representative column height was assumed to be 27 feet with 15 feet of packing.[19] A liquid to gas (L/G) ratio of 50 gallons per 1,000 ft^3 was assumed.[19]

5.1.4.3 Development of Scrubber Capital Costs. The cost methodology for the scrubber (both post-incineration and stand-alone) follows the procedure outlined in Chapter 9.0 of the OCCM.[34] The main components in scrubber cost are: tower, packing, and ductwork to the scrubber. The following equation was used in the cost analysis for the tower, after conversion to 4th Quarter 1991 dollars:

$$EC = (115, \$/ft^2) * (S, ft^2)$$

where:

EC	=	Equipment cost (4th Qtr 1991 dollars);
S	=	Column surface area (ft^2), approximated by $\pi * D (H_T + D/2)$;
D	=	Diameter of the tower (ft); and
H_T	=	Height of the tower (ft).

The cost for the column packing was based on the packing volume. The cost for 2-inch ceramic saddles or raschig rings

TABLE 5-5. DESIGN PARAMETERS FOR STAND-ALONE SCRUBBER SYSTEM

Parameters	Values
Waste gas flow rate entering absorber	2,000 to 80,000 scfm
Temperature of waste gas stream	140 °F
Pollutants in waste gas	Cl_2, ClO_2, HCl, Methanol, Chloroform
Chlorine removal efficiency[a]	99 percent (molar basis)
Scrubbing liquid	Caustic solution (white liquor, E-stage filtrate), 50 gal/1,000 ft^3
Packing type	2-inch ceramic saddles or Raschig rings
Packing height	15 feet
Column height	27 feet

[a] Removal efficiencies for other compounds range from 0 to 99 percent and are documented in a separate memorandum.[35]

is identical at $20 per cubic foot.[34] The methodology for calculating costs for the conveyance system for a scrubber system is the same as for the conveyance system to a combustion device presented in Section 5.1.2.

The total capital investment was estimated to be 2.20 times purchased equipment costs and include auxiliary equipment, instrumentation, sales taxes, and freight.[34]

5.1.4.3 Development of Scrubber Annual Cost. Annual costs for the scrubber system include direct operating costs, such as labor costs, utility costs, maintenance costs, operating material costs, and wastewater disposal costs and indirect operating costs, such as total annualized capital charges.

The cost for operating materials include that of the absorbing liquid used in the scrubber. According to a survey by the EPA's Office of Water, many mills in the pulp and paper industry currently purchase caustic (sodium hydroxide [NaOH]) for other mill purposes.[11] In many cases, caustic solutions from other mill processes (i.e., weak wash from the chemical recovery loop) are used in the scrubber by supplementing with fresh caustic as necessary. The caustic used in the scrubber may then be used in the bleach plant extraction stage or it may be disposed of for a negligible cost with the remainder of the mill wastewater that does not require control for air emissions.[36,37] For this analysis, water and caustic costs were assumed to be negligible because the scrubbing medium was assumed to exist on-site.[19]

The utility considered in the annual cost estimates is the cost of electricity. Electricity cost is dependant on the energy required to operate the fan and the pump to overcome the pressure drop in the column. For this analysis, an electricity cost of $0.04/kW-hr was used.[11]

The scrubber system maintenance and operating labor costs, supervisory costs, capital recovery charges as well as taxes, insurance, administrative and overhead charges were

calculated as described in Section 5.1.3, with the only exception being that a 15 year equipment life was assumed.

5.1.5 Steam Stripping Costs

This section discusses steam stripper design considerations affecting cost and the general methodology used to develop capital and annual costs for steam strippers. The costing methodology and assumptions documented in this section are those used in the proposed rulemaking package. Though industry has commented on the basis and additional information is being developed, the results have not been revised to reflect any changes at this time. Specific areas for future consideration are identified in the text of this section.

A survey was conducted by the American Paper Institute/National Council of the Paper Industry for Air and Stream Improvement (API/NCASI), and of the 140 responses, 31 mills reported the use of strippers to control emissions from wastewater. Based on these data, approximately 67 percent of these mills integrate the steam stripper into the evaporator set and 33 percent use stand-alone steam strippers.[38] Therefore, the (industry-wide) average costs presented in this analysis are prorated for these percentages. (Industry has recently commented that the questionnaire was misinterpreted and that a lower percentage of mills use integrated steam strippers.) For facilities that are not planning joint evaporator upgrades, it would be less expensive not to integrate and to retrofit the steam stripper into the evaporator system. The following discussion presents the design and cost methodologies for both integrated and stand-alone steam strippers.

5.1.5.1 Steam Stripper Design Considerations Affecting Cost. Factors affecting the costs for steam stripping include the steam usage (annual costs), tower height and diameter (capital and annual costs), and the stripper configuration (tray vs. packed-bed) (capital and annual costs). The most sensitive parameter for costing is steam use; therefore, any adjustments to the proportion of mills using integrated versus

stand-alone systems would have the most effect on costs for controlling air emission from wastewater. The steam stripper system design basis included a steam-to-feed ratio of 0.18 kg steam per liter of wastewater (1.5 lb/gal) which achieves a 90 percent removal efficiency for methanol based on representative data of pulp mill steam stripper performance.[39] The stripper was assumed to be a sieve tray column with 8 theoretical stripping trays.[38]

The column diameter and the size of the auxiliary equipment are a function of the wastewater feed rate. The column must be wide enough to provide a desired (low) pressure drop and liquid retention time in the column using correlations developed to prevent column flooding.

An integrated system uses steam from the evaporator set for operation. Due to the use of steam from the evaporator, the use of fresh steam for an integrated system is much lower than that of a stand-alone system. The steam does lose some of its heating value due to use in the steam stripper (approximately 6 to 12 percent of typical boiler capacity).[40] Consequently, it must be supplemented with make-up steam from remaining boiler supply for use in later effects. While it is not expected that an additional boiler would be required in this case, dedicated use of this steam could limit future operational flexibility.

It was assumed that the overhead stream from either (integrated or stand-alone) system would be ducted to an existing combustion device and would contribute some heat value; however, this heat value will be partially offset by the increased heat requirement to heat the high moisture content in the vent stream. In practice, a fuel-rich overhead stream is obtained by including reflux in the stripper design. Such a design would incur costs for the reflux tank and associated condenser, yet produce a recovery credit for using the overhead gases as fuel.[38]

The cost algorithm used in evaluating national impacts accounted for a recovery credit of $73,400 per year, based on

the approximated fuel value of the organics in the overhead stream; however, that costing approach did not include feed tank costs or reflux tank and condenser costs for the stand-alone system, nor did it assume that any equipment other than the sieve trays and pumps was constructed of stainless steel. The costs for the cooling load on the reflux condenser were also not included. In practice, the recovery credit is greater than the credit used in the analysis, but the system capital and annual costs including the items listed above are greater. The resulting annual costs are within 15 to 20 percent of those presented in this document.

5.1.5.2 Development of Steam Stripper Capital Costs. The capital costs for the steam stripper system are based on the following equipment components:

- Reflux tank (for integrated system);[41]
- Steam stripper column (including column shell, skirts, nozzles, manholes, platforms and ladders, and stainless steel sieve trays);[42,43]
- Flame arrestor;[44]
- Pumps;[45] and
- Feed Preheater.[46]

All costs are for carbon steel construction except for sieve trays and pumps. It was assumed that these components would be constructed of stainless steel because they are subject to the greatest wear and are exposed to the harshest conditions. No capital costs for additional boilers or cooling towers were included.

The total capital investment for a steam stripper system is calculated to be 2.20 times the purchased equipment costs. The purchased equipment cost includes costs for the equipment components, auxiliary piping (additional piping for combining wastewater streams and vent lines), instrumentation, sales tax, and freight.

Stainless steel construction cost factors are included for comparison because facilities with corrosive wastewater streams (i.e., high pH) will require a steam stripper system

constructed of a corrosion-resistant material. Equipment costs for stainless steel were estimated from the carbon steel costs, using a factor for conversion from carbon steel cost to 304 stainless steel cost. Table 5-6 presents the stainless steel cost factor for each equipment component.

5.1.5.3 Development of Steam Stripper Annual Costs. The total annual cost is the total of all costs incurred to operate the steam stripper system throughout the year. The annual operating costs comprise direct and indirect charges. Direct annual costs comprise expenses incurred during normal operation of the steam stripper process, including utilities, labor, and maintenance activities. For this preliminary analysis, it was assumed that existing steam capacity and cooling water would be used.

Electricity is needed to operate pumps and other electrical components in the system. The electricity required for the pumps is calculated using design flow rates for each pump and assuming a developed head of approximately 37 meters (120 ft) of water and a pump efficiency of 64 percent. For this analysis, electricity cost is assumed to be $0.04/kW-hr.[11] The steam costs are estimated using the design steam loading of 0.180 kg of steam per liter (1.50 lb/gal) of wastewater feed. For integrated systems, make-up steam use is approximately 12 percent of the steam use for the stand-alone system.[40] For this analysis, the steam cost is assumed to be $4.02/Mg.[11]

The steam stripper operating and maintenance labor costs, maintenance material costs, supervisory labor costs, administrative and overhead charges, capital recovery charges, taxes, and insurance were calculated as described in Section 5.1.3, with the only exception being that at 15 year equipment life was assumed.

5.2 CONTROL OPTIONS COSTS

Table 5-7 presents a summary of total capital investment and total annual cost for controlling an example mill using the control options presented in Chapter 4.0. The example

TABLE 5-6. STAINLESS STEEL COST FACTORS

Equipment component	Stainless steel cost factor	Reference
Steam stripper column - shell	1.7	42
Reflux tank	2.4	45
Feed preheater	0.8193 + 0.15984 * (ln A) where A is in ft^2	46

TABLE 5-7. SUMMARY OF COSTS FOR CONTROL OPTIONS FOR AN EXAMPLE FACILITY

Option	Emission points	Flow rate (scfm)	HAP conc.	TCI($)	TAC ($/yr)
Combustion of pulping vents: capture (enclosures where necessary) and conveyance to an existing combustion device	• Brownstock washer[a] • Brownstock foam tank • Knotter[a] • Deckers/screens[a] • Weak black liquor storage tank	34,900 scfm[b]	300 ppmv	1,920,000	429,000
Scrubbing of bleaching vents (combined vents)	• Bleach plant washers • Bleach plant towers • Bleach plant seal tanks	51,400 scfm	150 ppmv	860,000	287,000
Combustion of bleaching vents followed by scrubbing (combined vents)	• Bleach plant washers • Bleach plant towers • Bleach plant seal tanks	51,400 scfm	150 ppmv	4,320,00	3,840,000
Steam stripping of pulping wastewater (combined streams) followed by conveyance to an existing combustion device	• Digester blow tank condensates • Evaporator foul condensates	1,500 gal/min	1,350 ppmw	3,500,000	1,900,000

[a] Emission points that require enclosures.
[b] The flow rate for sources requiring enclosures was 29,000 scfm with a concentration of 150 ppmv (after enclosure installation) and for enclosed sources, the flowrate was 5,900 scfm with a concentration of 1,000 ppmw.

mill is identical to the model chosen for the examples given in Chapter 4.0 (i.e., pulping capacity 1,000 tons per day, pulping model P1 and bleaching model B1, as given in Appendix C). This model was chosen since it is used most often in representing mills in the industry. The assumption was made that this mill has existing baseline controls, as discussed in the examples in Chapter 4.0. Vents assumed to be controlled at baseline include the digester relief vent, digester blow gas vent, and the evaporator noncondensible gas vent. The costs to control these vents is not included in the cost examples to follow. Industry has commented that the control of evaporator condensate streams is less than what has been assumed for this analysis. However, for the purpose of this analysis, it was assumed that all pulping wastewaters generated are steam stripped due to the high concentrations of methanol present in the model (P1) condensate streams. This analysis also assumed that bleach plant wastewaters, including scrubber effluent, were not steam stripped.

A detailed breakdown of the costs for the selected control options (as in Chapter 4.0) are presented in Tables 5-8 to 5-12 for the example 1000 ton per day (TPD) facility. Brief discussions are given below.

The example costs for controlling pulping vents are based on ducting the vents to an existing combustion device. The costs to convey the vents are based on two procedures. Points that do not require enclosures are combined into a main duct which is piped to a retrofitted existing combustion device. The costs for controlling these vents are presented in Table 5-8. The pulping points that require enclosures (i.e., rotary vacuum pulp washer, knotter, and decker/screen) are enclosed and then combined in a second main duct and piped to the appropriately retrofitted control device. The costs for controlling these vents are presented in Table 5-9.

Two potential scenarios to control bleaching process vents (as discussed in Chapter 4.0) were selected for examples

TABLE 5-8. COSTS FOR MODEL MILL PULPING VENTS NOT REQUIRING ENCLOSURES USING AN EXISTING COMBUSTION DEVICE[a]

Cost component	Equipment size or cost factor	Component cost ($)	Total cost ($)
Equipment costs:[b]			
Ductwork	19 in. diameter 1000 ft. length 20 elbows	50,000	
Fan	16 in. diameter 17 hp 5,900 scfm	1,000	
Knockout drum	2 ft. diameter 5 ft. height 0.25 in. thickness	1,000	
Flame arrestor	19 in. diameter	32,000	
Rupture disc	10 discs	9,000	
Purchased equipment cost (PEC)	Sum of equipment costs	93,000	
Total capital investment (TCI)	3.02 * PEC		281,000
Total annual cost			83,000

[a] Includes brownstock washer foam tank and weak black liquor storage tank with a flowrate of 5,900 scfm.
[b] It was assumed that equipment costs are given as purchased equipment costs.

TABLE 5-9. COSTS FOR MODEL MILL PULPING VENTS REQUIRING ENCLOSURES (FUGITIVE SOURCES) USING AN EXISTING COMBUSTION DEVICE[a]

Cost component	Equipment size or cost factor	Component cost ($)	Total cost ($)
Equipment costs:[b]		249,000	
Ductwork	44 in. diameter 1000 ft. length 20 elbows		
Fan	44 in. diameter 50 hp 29,000 scfm	6,000	
Knockout drum	4.0 ft. diameter 12.0 ft. height 0.375 in. thickness	5,000	
Flame arrestor	45 in. diameter	111,000	
Rupture disc	10 discs	43,000	
Purchased equipment cost (PEC)	Sum of equipment costs	414,000	
Total capital investment (TCI)			
TCI_{duct}	3.02 * PEC	1,250,000	
$TCI_{enclosure}$	5 enclosures[c]	385,000	
TCI	TCI_{duct} + $TCI_{enclosure}$		1,635,000
Total annual cost (TAC)			
TAC_{duct}		288,000	
$TAC_{enclosure}$		58,000	
TAC	TAC_{duct} + $TAC_{enclosure}$		346,000

[a] Includes brownstock washer, knotter, and decker/screen with a flowrate of 29,000 scfm.
[b] It was assumed that equipment costs are given as purchased equipment costs.
[c] Total capital investment for the enclosures is based on one washer line with three washer hoods and supports ($230,000) and two single enclosure for the knotter and decker/screen ($64,000 each).

TABLE 5-10. COSTS FOR CONTROL OF MODEL MILL BLEACHING VENT STREAMS[a] USING STAND-ALONE SCRUBBER

Cost component	Equipment size or cost factor	Component cost ($)	Total cost ($)
Equipment costs:			
Scrubber column	15 ft. diameter 27 ft. height	187,000	
Packing	2,649 ft^3 volume	53,000	
Pump	2,570 gpm capacity	9,350	
Fan[b]	51,000 scfm	7,600	
Duct (Pipe & Elbows)[b]		74,000	
Equipment cost (EC)	Sum of equipment costs	330,000	
Purchased equipment cost (PEC)	1.18 * EC	390,000	
Total capital investment (TCI):			
TCI	2.20 * PEC	860,000	
Total Annual cost (TAC)			287,000

[a] Based on tower, washer, and seal tank vents from C, D, E, and H stages.
[b] Detailed equipment size and cost procedures for ductwork are presented in Table 5-8.

TABLE 5-11. COSTS FOR CONTROL OF MODEL MILL BLEACHING VENT STREAMS USING AN INCINERATOR FOLLOWED BY A SCRUBBER[a]

Cost component	Equipment size or cost factor	Component cost ($)	Total cost ($)
Equipment costs:[b]			
Incinerator = EC	1 incinerator 51,400 scfm	132,000	
Purchased equipment cost (PEC)	1.18 (EC)	156,000	
Total capital investment (TCI):			
$TCI_{incinerator}$	1.61 * PEC	250,000	
$TCI_{duct\ to\ incinerator}$	1 duct 1000 ft. length 48 in. diameter 20 elbows	2,830,000	
$TCI_{duct\ to\ scrubber}$	300 ft length 48 in. diameter 6 elbows	595,000	
$TCI_{scrubber}$	15 ft. diameter 27 ft. height	650,000	
TCI	$TCI_{incinerator} + TCI_{duct\ to\ incinerator} + TCI_{duct\ to\ scrubber} + TCI_{scrubber}$		4,320,000

TABLE 5-11. COSTS FOR CONTROL OF MODEL MILL BLEACHING VENT STREAMS USING AN INCINERATOR FOLLOWED BY A SCRUBBER (Concluded)

Cost component	Equipment size or cost factor	Component cost ($)	Total cost ($)
Total annual costs (TAC)			
$TAC_{incinerator}$		2,830,000	
$TAC_{duct\ to\ incinerator}$		650,000	
$TAC_{duct\ to\ scrubber\ and\ scrubber}$[b]		370,000	
TAC	$TAC_{incinerator} + TAC_{duct\ to\ incinerator} + TAC_{duct\ to\ scrubber\ and\ scrubber}$		3,840,000

[a] Based on tower, washer and seal tank vents from C, D, E, and H stages.
[b] Detailed equipment size and cost procedures for duct are presented in Table 5-8 and for scrubber in Table 5-10.

TABLE 5-12. COST FOR CONTROL OF MODEL MILL PULPING WASTEWATER STREAMS USING A STEAM STRIPPER

Cost component	Equipment size or cost factor	Component cost ($)	Total cost ($)
Equipment costs:			
Feed preheater	49,000 ft^2	680,000	
Tray column	11 ft diameter 29 ft height	150,000	
Reflux tank (integrated only)	170 ft^3 volume	17,000	
Flame arrestor	1 per line 0.16 ft. diameter	113	
Pumps (integrated only)	Feed and bottoms, 10 hp each Reflux, 1 hp	100,000	
Pumps (nonintegrated only)	Feed and bottoms, 10 hp each	99,000	
EC (integrated)	Preheater + tray column + reflux tank + flame arrestor + 3 pumps	950,000	
EC (nonintegrated)	Preheater + tray column + feed tank + flame arrestor + 2 pumps	930,000	
Purchased equipment costs (PEC):			
PEC (integrated)		1,100,000	
PEC (nonintegrated)	Auxiliary piping[a] + sales tax + instrumentation	1,100,000	

TABLE 5-12. COST FOR CONTROL OF MODEL MILL PULPING WASTEWATER STREAMS USING A STEAM STRIPPER (Concluded)

Cost component	Equipment size or cost factor	Component cost ($)	Total cost ($)
Total capital investment (TCI):			
TCI (integrated)	2.2 * PEC	2,500,000	
TCI (nonintegrated)	2.2 * PEC	2,500,000	
TCI (duct)		3,200,000	
TCI	$0.67(TCI_{integrated})^b + 0.33(TCI_{nonintegrated} + TCI_{duct})$		3,500,000
Total annual cost (TAC):			
Annual steam cost (integrated)		250,000	
Annual steam cost (nonintegrated)		2,900,000	
Annual recovery credit		73,000	
TAC (integrated)		780,000	
TAC (nonintegrated)		3,400,000	
TAC (duct)		720,000	
TAC	$0.67(TAC_{integrated})^b + 0.33(TAC_{nonintegrated} + TAC_{duct})$		1,900,000

[a] Auxiliary piping is included here to account for the combination of wastewater streams and vapor vent lines for wastewater holding tanks.
[b] Costs are based on weighted ratio of the cost of an integrated steam stripper and a stand-alone steam stripper (0.67 and 0.33, respectively).

in this cost section. The first scenario is based on combining and controlling the vents with a scrubber designed to remove HCl and chlorine (with some consequential volatile HAP removal). These costs are presented in Table 5-10. The second cost scenario is based on combining and controlling the vents, first by incineration, then by ducting the incinerator exhaust to a scrubber. The costs associated with this scenario are presented in Table 5-11.

The example costs for wastewater streams are based on combining the streams and controlling with a steam stripper, with the overheads ducted to an existing combustion device. The cost procedure is presented in Table 5-12. The costs are based on a weighted ratio of the cost of an integrated steam stripper and a stand-alone steam stripper (0.67 and 0.33, respectively), as discussed in Section 5.1.5.

A comparison of costs for pulp mills of varying sizes is presented in Table 5-13. The mill sizes are small (500 TPD), medium (1000 TPD), and large (1500 TPD). The detailed cost procedures for the medium mill are presented in Tables 5-8 through 5-12. The same procedures were used to estimate costs for the small and large mills.

TABLE 5-13. COMPARISON OF TOTAL CAPITAL INVESTMENT (TCI) AND TOTAL ANNUAL COST (TAC) FOR MODEL MILLS WITH VARYING CAPACITIES

		Mill Capacity (TPD)					
		500		1000		1500	
Option	Emission Point	TAC	TCI	TAC	TCI	TAC	TCI
Combustion of pulping vents not requiring enclosures	• Brownstock foam tank • Weak black liquor storage tank	$ 58,000	$ 170,000	$ 83,000	$ 280,000	$ 110,000	$ 410,000
Combustion of pulping vents requiring enclosures	• Brownstock washer • Knotter • Deckers/screens	$ 210,000	$1,000,000	$ 350,000	$1,600,000	$ 450,000	$2,100,000
Scrubbing of bleaching vents[a]	• Bleach plant washers • Bleach plant towers • Bleach plant seal tanks	$ 160,000	$ 400,000	$ 290,000	$ 860,000	$ 330,000	$1,100,000
Combustion of bleaching vents followed by scrubbing[a]	• Bleach plant washers • Bleach plant towers • Bleach plant seal tanks	$2,630,000	$2,670,000	$3,800,000	$4,300,000	$7,500,000	$7,000,000
Steam stripping of pulping wastewater followed by conveyance of vent stream to an existing combustion device	• Digester blow tank condensates • Evaporator foul condensates	$ 840,000	$1,620,000	$1,900,000	$3,500,000	$2,300,000	$4,600,000

[a] The bleaching vent emission points controlled included those points in a CEHD sequence (i.e, 3 points for each stage, totaling 12 vents).

5.3 REFERENCES

1. Memorandum from Greene, D.B., Radian Corporation to Pulp and Paper NESHAP project file. Brownstock Washer Enclosure Costs. July 21, 1993.

2. Memorandum from Greene, D.B., Radian Corporation to Pulp and Paper NESHAP project file. Development of Gas Transport System Design and Costs. September 27, 1993.

3. Vatavuk, W.M., Estimating Costs of Air Pollution Control. Chelsa, MI, Lewis Publishers. 1990. p. 74.

4. Ref. 3, pp. 77, 78.

5. Ref. 3, pp. 71-72.

6. Memorandum from Greene, D.B., Radian Corporation, to Pulp and Paper project file. Flame Arrestor Costs. August 2, 1993.

7. Memorandum from Greene, D.B., Radian Corporation, to Pulp and Paper project file. Rupture Disc Cost. August 2, 1993.

8. OAQPS Control Cost Manual. Fourth Edition. U. S. Environmental Protection Agency, Office of Air Quality Planning and Standards. Research Triangle Park, NC. Publication No. EPA 450/3-90-006. January 1990. pp. 7-38 and 7-39.

9. Ref. 8, p. 3-52.

10. Municipal Waste Combustors - Background Information for Proposed Standards: Cost Procedures, pp. 3.7-1 and 3.7-2.

11. Fax. Rovansek, W., Radian Corporation - Herndon, VA, to Watkins, S.L., Radian Corporation - Research Triangle Park, NC. July 16, 1992. Operating costs from regional cost letters. pp. 16 through 23.

12. Ref. 8, pp. 2-26, 2-29, and 3-54.

13. Ref. 8, Chapter 3.0.

14. Memorandum from Seaman, J.C., Radian Corporation, to Project File. Control of Pulping Vent Streams in an Existing Combustion Device. September 29, 1993.

15. Memorandum from Pandullo, R.F., Radian Corporation, to Barbour, W.J., Radian Corporation, Evans, L., U.S. EPA, et al. Summary of April 11 Meeting to Discuss Thermal Incinerator Cost Issues. April 27, 1990.

16. Ref. 9, p. 3-8.

17. Memorandum and attachments from Farmer, J.R., U. S. Environmental Protection Agency, Emission Standards Division, to Ajax, B., et.al., August 22, 1980. Thermal Incinerators and Flares.

18. Ref. 8, pp. 3-31 through 3-34.

19. Memorandum from Olsen, T.R., Radian Corporation, to Shedd, S.A., EPA/CPB. Pulp and Paper NESHAP Selection of Bleach Plant Scrubber Design and Costs. October 8, 1993.

20. Ref. 8, pp. 3-42 through 3-44.

21. Ref. 8, p. 3-47.

22. Ref. 8, p. 2-25.

23. Ref. 8, p. 2-29.

24. Perry, R.H., D.W. Green, and J.O. Maloney. Perry's Chemical Engineers' Handbook. Sixth Edition. New York, McGraw-Hill Book Company. 1984. p. 3-78.

25. Ref. 24, p. 3-249.

26. Ref. 24, pp. 3-75 and 3-76.

27. Ref. 24, p. 14-16.

28. Geankopolis, C.J., Transport Process and Unit Operations. Second Edition, Boston, MA. Allyn and Bacon, Inc. 1983. p. 798.

29. Felder, R.M., and R.W. Rousseau, Elementary Principles of Chemical Processes. Second Edition, New York, NY. John Wiley & Sons. 1986. pp. 622 through 624.

30. Ref. 8, p. 9-65.

31. Buonicore, A.J., and L. Theodore. Industrial Control Equipment for Gaseous Pollutants. Volume I. Cleveland, OH, CRC Press, Inc., 1975. pp. 74, 105, and 106.

32. Ref. 8, pp. 9-14 through 9-35.

33. Bleach Plant Chlorine and Chlorine Dioxide Emissions and Their Control. Technical Bulletin No. 616. New York, National Council for the Paper Association for Air and Stream Improvement, Inc. September 1991.

34. Ref. 8, pp. 9-36 through 9-46.

35. Memorandum from Olsen, T.R., Radian Corporation, to Shedd, S.A., EPA/CPB. Model Scrubber Removal Efficiencies. September 17, 1993.

36. Telecons. Brown, H.P., to various mills. Scrubbing medium.

37. Telecons. Brown, H.P., Radian Corporation - Research Triangle Park, NC, with Rovansek, W., Radian Corporation - Herndon, VA. Wastewater Treatment Costs. January 13, 1993.

38. Memorandum from Fortier, G.E., Radian Corporation, to Pulp and Paper NESHAP Project File. Basis for Pulp Mill Steam Stripper Costing. September 30, 1993.

39. Memorandum from Fortier, G.E., Radian Corporation, to Pulp and Paper NESHAP Project File. Design Steam-to-Feed Ratio of a Steam Stripper in Pulp Mills and Development of Fraction Removed Values. September 3, 1993.

40. Burgess, T.L., Chemetics International, Inc. The Basics of Foul Condensate Stripping. Environmental Issues-1990. A TAPPI Press Anthology. pp. 348 through 352.

41. Damle, A.S., and T.N. Rogers, Research Triangle Institute. Air Stripper Design Manual. Prepared for U. S. Environmental Protection Agency, Office of Air Quality Planning and Standards, Research Triangle Park, NC. May 1990. pp. 17-18.

42. Estimation Costs of Distillation and Absorption Towers via Correlations. Chem. Eng. Vol. 88, No. 26. December 28, 1981. pp. 77-82.

43. Peters, M.S., and K.D. Timmerhaus. Plant Design and Economics for Chemical Engineers. Third Edition. New York, McGraw-Hill Book Company. 1980. pp. 768-773.

44. Telecon. Gitelman, A., Research Triangle Institute, with Oakes, D. Flame Arrestor Costs. September 1986.

45. Estimating Process Equipment Costs. Chem. Eng. Vol. 95. No. 17. November 21, 1988. pp. 66 through 75.

46. Estimating Costs of Heat Exchangers and Storage Tanks Via Correlations. Chemical Engineering Volume 89, No. 2. January 25, 1982. pp. 125 and 127.

6.0 DATABASE SYSTEM FOR ESTIMATING NATIONAL IMPACTS

This chapter describes the development and use of a database system for estimating the national impacts of regulatory alternatives on the pulp and paper industry. The database system was designed to provide estimates of national uncontrolled air emissions, national baseline air emissions, and national impacts of air control options (HAP emissions reductions, costs, and secondary impacts). In addition, to allow joint evaluation of the overall impact of air control options and water effluent guideline control options, the database system generates summary tables of impacts using the calculated air control impacts and water control impacts that were provided by the EPA Office of Water.

Figure 6-1 presents a flow diagram of the process for estimating national impacts. The remainder of this chapter discusses the data inputs, the steps for calculating air emissions, air emission reductions, control costs, electricity and fuel use, and the generation of summary output tables for these joint air and water control impacts.

6.1 DATA INPUTS

As described in previous chapters, extensive data gathering efforts and review were conducted to characterize the pulp and paper industry with regard to processes and their emissions and current levels of control on a mill-specific basis. A database containing information (e.g., capacity, wood type) on each pulping and bleaching line for all mills considered for regulation by the EPA was developed to estimate national impacts of control options.[1,2,3] (This mill-specific database contains confidential business information and is, therefore, not publicly available.)

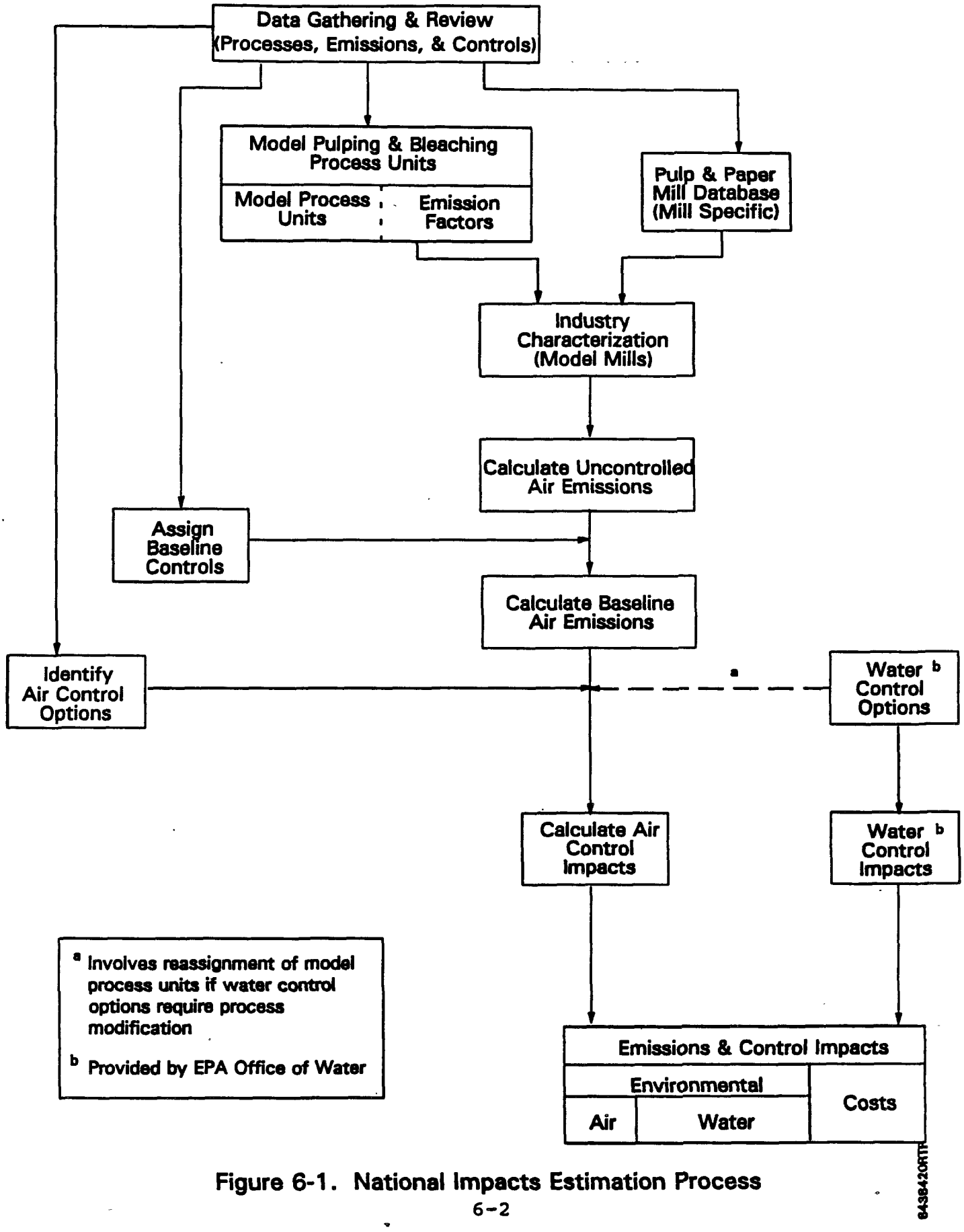

Figure 6-1. National Impacts Estimation Process

Because emissions data were not available for each mill included in the pulp and paper mill database, a model process unit approach was taken to estimate national emissions. Chapter 4.0 summarizes the 30 model pulping and bleaching process units that were developed to represent the industry. These models included, for each emission point, a design capacity-weighted emission factor. (Appendix C lists all the pulping and bleaching model process units used in the database system, with the emission point-specific emission factors and vent or stream characteristics.) When these model process units are merged with the pulp and paper mill database, an industry characterization database is produced (made up of model mills) with sufficient information to allow calculation of uncontrolled air emissions. Although this model characterization is not an exact representation of each mill in the industry, it is a reasonable characterization for purposes of assessing the relative impacts of alternative control options on the industry as a whole.

As described in Chapter 2.0, the industry was also characterized with regard to baseline air emission control levels. Information was gathered through questionnaires and a review of existing regulations to allow a determination of which emission points are currently controlled for each mill in the database.

As described in Chapters 3.0, 4.0, and 5.0, the data-gathering efforts also identified applicable control options for the emission points identified. For each control option, procedures were developed to estimate the cost and environmental impacts associated with the application of that control to a specific emission point in a mill. This input control file was used in calculating the national impacts for specified air control options.

6.2 CALCULATION OF NATIONAL EMISSIONS AND CONTROL IMPACTS

Baseline air emissions were calculated from the uncontrolled air emissions (i.e., model process unit emission factors multiplied by mill-specific line capacities) by

assigning appropriate control efficiencies to the control devices that were assumed to be present at each facility. The uncontrolled and baseline emissions, calculated by emission point, were then summed for each process line and mill. National emissions were estimated by summing emissions from all individual mills.

National air control impacts (emissions, emissions reductions, and costs) were calculated for each mill based on a range of air control options. The assumptions and procedures for the impacts are given in Chapter 4.0 (Environmental Impacts) and Chapter 5.0 (Costs). Taking into account the baseline level of control assumed to be present at each facility, controlled emissions were calculated for each control option by emission point and were summed for each line, for each mill, and for all mills combined. Because the add-on controls may be applied to multiple emission points within a mill, control costs were not calculated by emission point; but instead were calculated by line or by mill. That is, depending on the capacity of the applicable control device, multiple streams were assumed to be routed to the device together (e.g., via a common header).

Note that because some of the EPA Office of Water control options include process modifications that change the model process unit assigned to a mill, model process units were reassigned to the specific mills. After this reassignment process, impacts of air control options are then estimated, accounting for the process modifications.

6.3 GENERATION OF SUMMARY OUTPUT FILES

As shown in Figure 6-1, the database system generates output tables summarizing emissions, emissions reductions, control costs, and electricity and fuel use. The output files for the proposal are in Reference 4. These summary tables also include the water control impacts provided by the EPA Office of Water as an input to the database. These output tables include pollutant-specific air emissions and emissions reductions for baseline and for each control option, as well

as total capital and annual costs and secondary environmental impacts.

6.4 References

1. Responses to the 1990 U.S. EPA National Census of Pulp, Paper, and Paperboard Manufacturing Facilities Section 308 Questionnaire and Supplements (Confidential Business Information). 1992.

2. 1991 Lockwood-Post's Directory of the Pulp, Paper, and Allied Trades. San Francisco, Miller Freeman Publications. 1990. p. 9.

3. Responses to Industry Survey discussed in the following letter: J.E. Pinkerton, National Council of the Paper Industry for Air and Stream Improvement, Incorporated (NCASI), to J. Telander, EPA: 15B, and P. Lassiter, EPA: CPB. February 11, 1992. (Responses were claimed confidential business information).

4. Memorandum from Olsen, T.R., and C. Reed, Radian Corporation, to Shedd, S.A., EPA/CPB. Revised Integrated Database Outputs. June 9, 1993.

APPENDIX A

FIELD TEST DATA

APPENDIX A
FIELD TEST DATA

A.1 INTRODUCTION

The EPA conducted a field test program to gather air emissions and liquid sample data by which to characterize emission sources within the pulp and paper industry. The purpose of the program was to obtain data that could be used as a basis for a national emission standard and as a basis for developing air pollution emission factors. Specific objectives of the testing program related to the national emission standard include characterizing emissions and emission sources within the pulp and paper industry and evaluating the effectiveness of various controls under consideration by EPA for MACT. Testing was conducted at a total of five facilities including four kraft and one sulphite mill. One of the four kraft facilities also had a neutral sulfite semi-chemical process which was sampled. Testing at each facility consisted of two parts: (1) air emission sampling of process vents on pulping and bleaching units, and (2) sampling of liquid process fluids which consist of weak black liquor, condensates, and wastewater.

This appendix contains a summary of the results obtained from the field sampling program. Brief summaries of each field test and the results obtained are presented in the following sections. Additional details regarding field test procedures and results are available from individual test reports for each test site.

The information reported in this appendix are taken directly from the field test reports and are in units of lb/hr for gaseous measurements and μg/mL for liquid measurements. Conversion of the measured values to units associated with production rate is discussed in Appendix B.

A.2 TEST DATA

A.2.1 Site 1. Site 1 was selected for field testing because it is considered to be representative of the kraft pulp

and paper industry and because several technologies that are potentially MACT for the process are in use at the facility. Site 1 is an integrated bleach kraft pulp mill. The mill produces kraft pulp from both hardwood and softwood chips. The pulp is used to produce uncoated, white free-sheet paper for copy machines, manuals, brochures, printing, business forms, and envelopes. The mill also produces bleached pine and hardwood market pulp, approximately 20 percent of which is in the form of baled pulp. An overview of the processes at the site are presented in Figure A-1.

Sampling points from Site 1 are located in the pulping, chemical recovery, and bleaching process areas of the mill. Site 1 pulps both pine (50 percent) and hardwood (50 percent). Figures A-2 and A-3 present the hardwood and softwood pulping processes. Hardwood chips are cooked in one of two batch digester pulping lines and the pine chips are cooked in one continuous digester.

The hardwood pulping process consists of two batch digester lines and two brownstock washer lines which combine to one screening and oxygen delignification line (see Figure A-2). Each batch digester line contains six batch digesters operated in parallel. The digesters empty to one of two blow tanks, one for each digestion line. The gases and steam are collected in a direct-contact accumulator and the pulp enters the washing line. The steam and condensible gases are condensed in the direct-contact accumulator with a portion of the cooled condensate from the accumulator. The noncondensible gases (NCG) from the accumulator are vented to the NCG control system and are combined with evaporator condensates from chemical recovery and steam stripped.

After the blow tanks, hardwood pulp flows to a knotter which removes undigested wood chips and returns them to the digesters. The hardwood pulp is then separated from the spent cooking chemicals, or black liquor, in a countercurrent, 3-stage brownstock washing system. Each stage consists of one vacuum

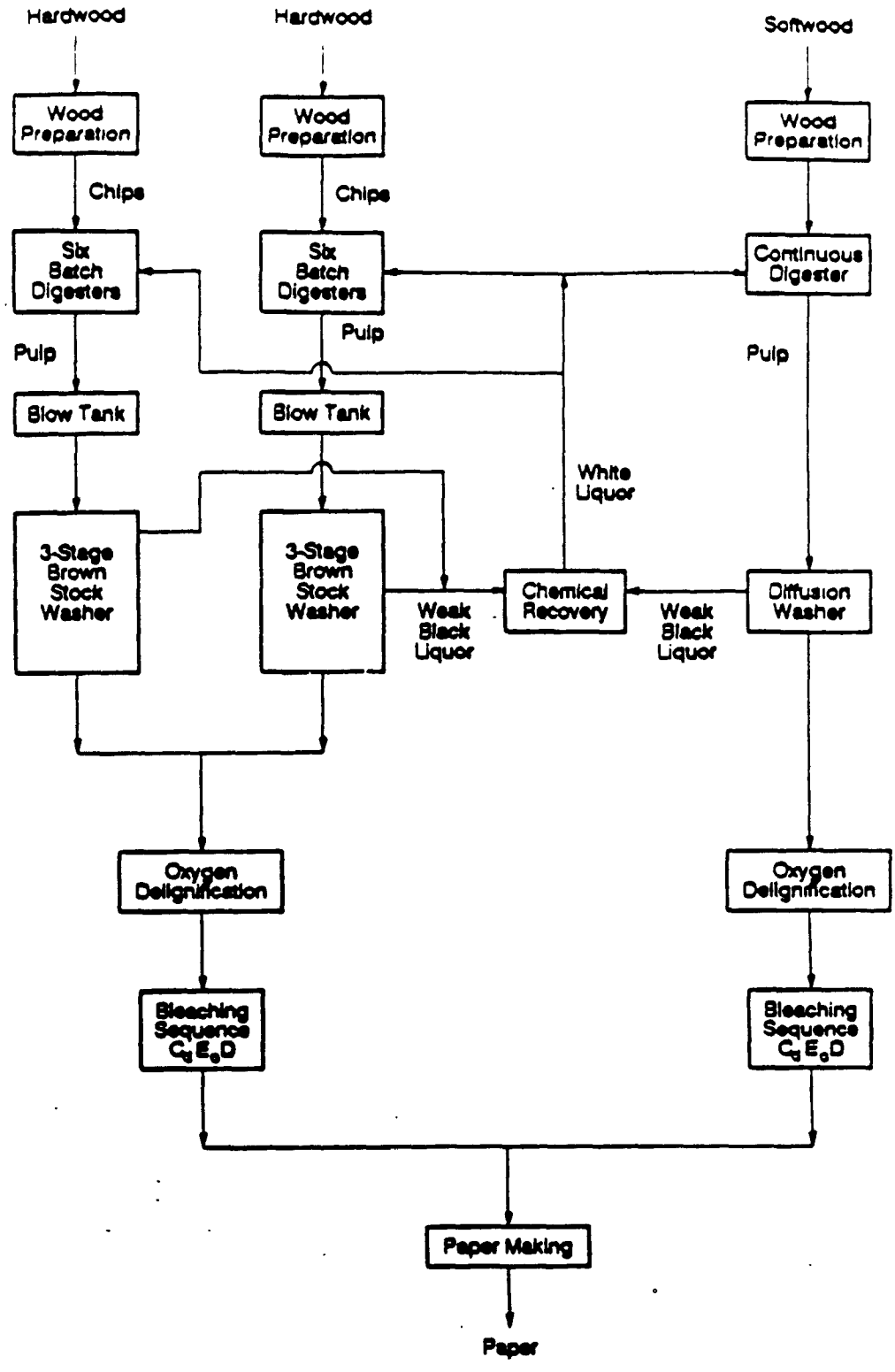

Figure A-1. General Process Diagram for Site 1

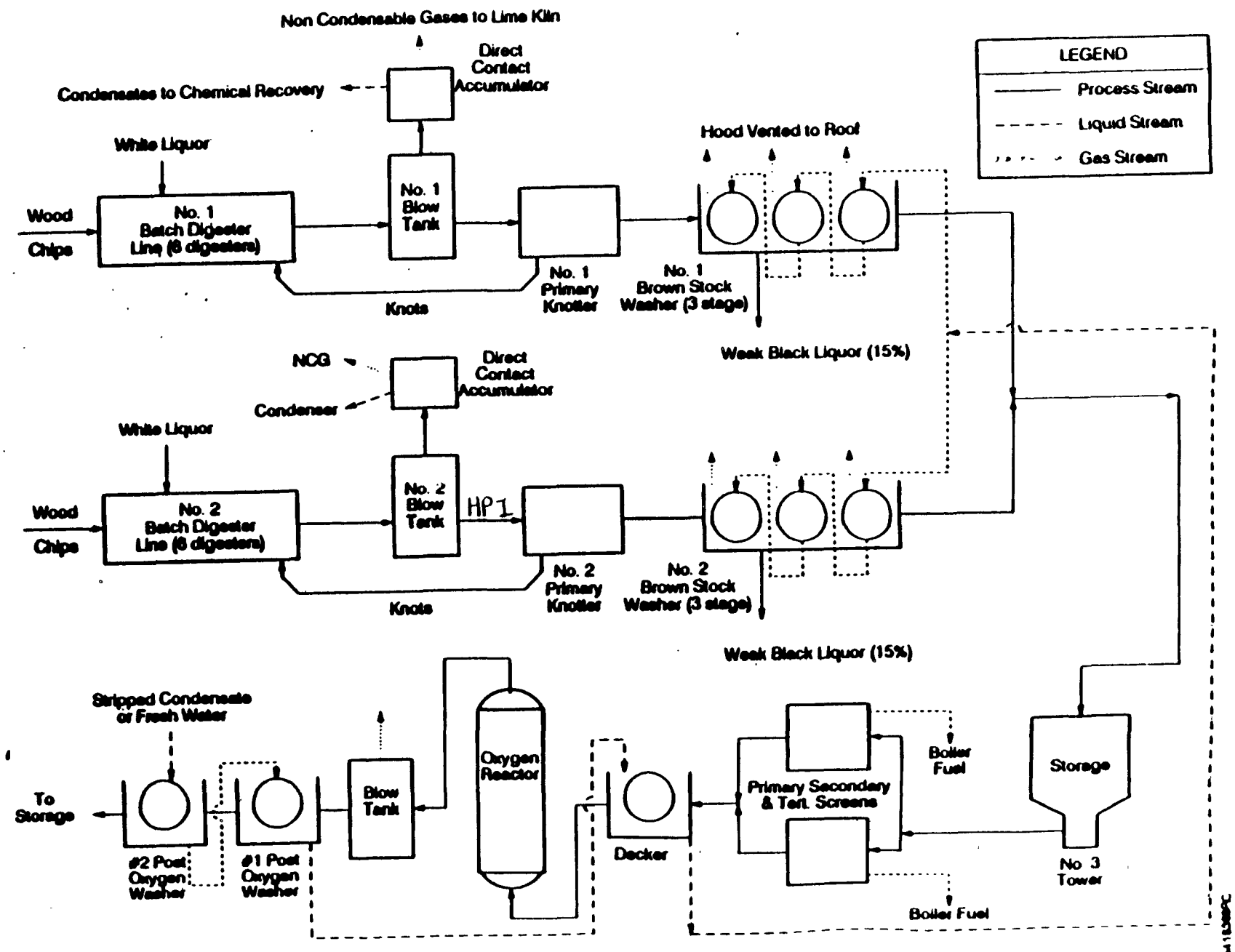

Figure A-2. Hardwood Pulping Process at Site 1

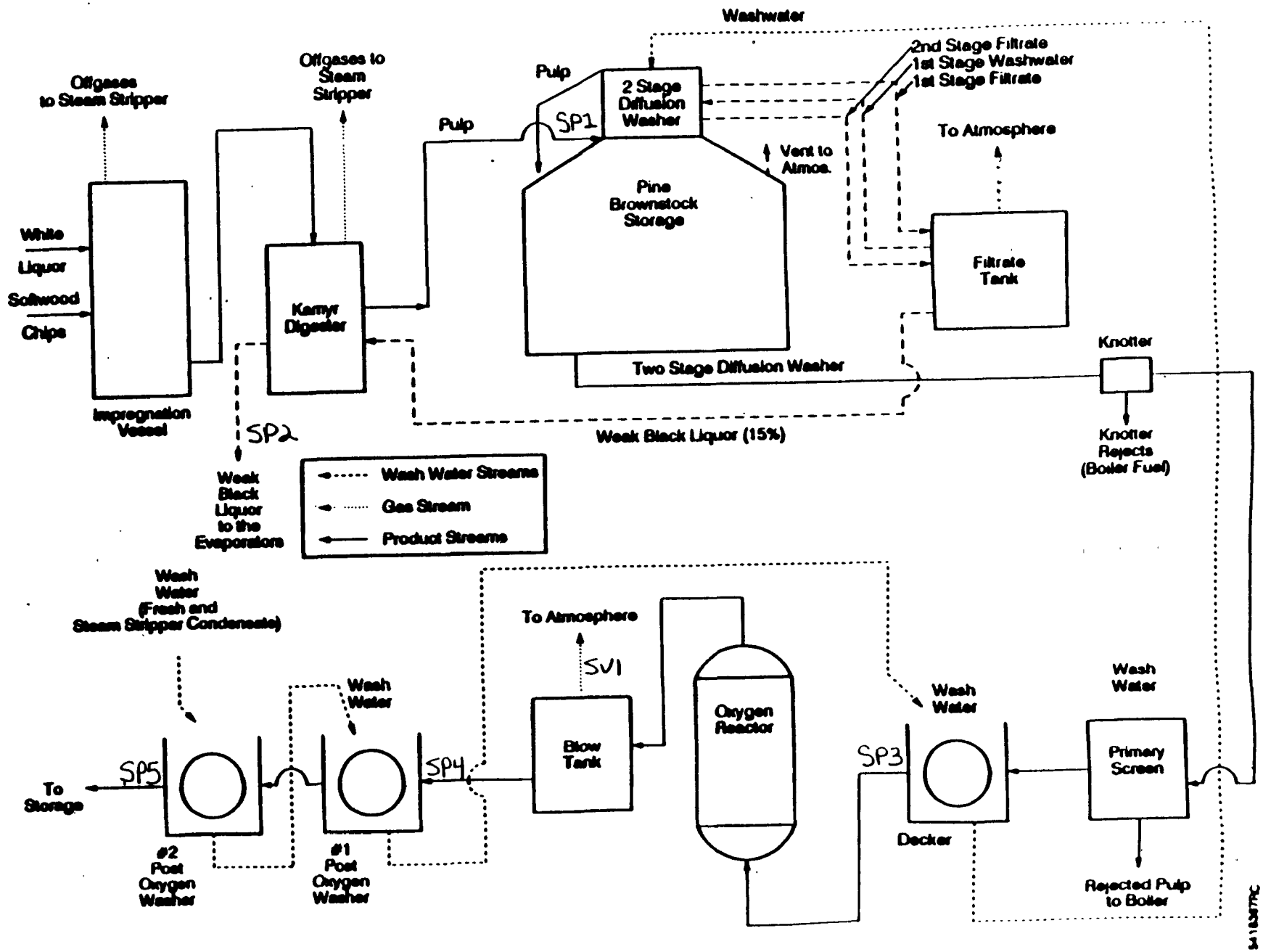

Figure A-3. Softwood Pulping Process at Site 1

drum washer. The pulp from the two hardwood lines is then combined. The combined pulp enters two parallel, primary screens, to remove oversized particles such as uncooked chips, and then enters the decker for thickening prior to oxygen delignification. In oxygen delignification, the pulp is treated with oxygen in an alkaline solution under pressure to remove additional lignin. The contents of the oxygen delignification tower are released to a lower pressure blow tank. The pulp is washed, pressed, and stored before being sent to the bleach plants. The weak black liquor is recovered from the first stage washers and stored.

The pine chips are digested in a Kamyr, continuous pulping process (see Figure A-3). The continuous digester is a two-vessel system in which pine chips are continuously fed into the first vessel with white liquor. The digestion process continues as the pulp flows from the first vessel to the second. The pulp and the liquor mixture flow from the second vessel to a two stage diffusion washer. Pine pulp flows upward through the washer tower countercurrent to down-flowing wash water recycled from the decker in a 2-stage diffusion washer. The weak black liquor is removed by extraction screens in the washer and used in the digester for washing and cooling. After exiting the washer, the pulp enters a storage tank prior to flowing through a screening system to remove oversized particles such as undigested chips, then a decker, to thicken and wash the pulp. The pulp slurry then enters an oxygen delignification tower for removal of additional lignin.

The chemical recovery process for Site 1 is presented in Figure A-4. The weak black liquor from the first stage in the hardwood brownstock washer lines and the softwood pulp diffusion washer are collected to recover the cooking chemicals in this process. Combined weak black liquors enter a storage tank, where soap is skimmed from the surface and sent to tall oil recovery. The weak black liquor is concentrated in two parallel multiple effect evaporators. Soap is also extracted midway through the

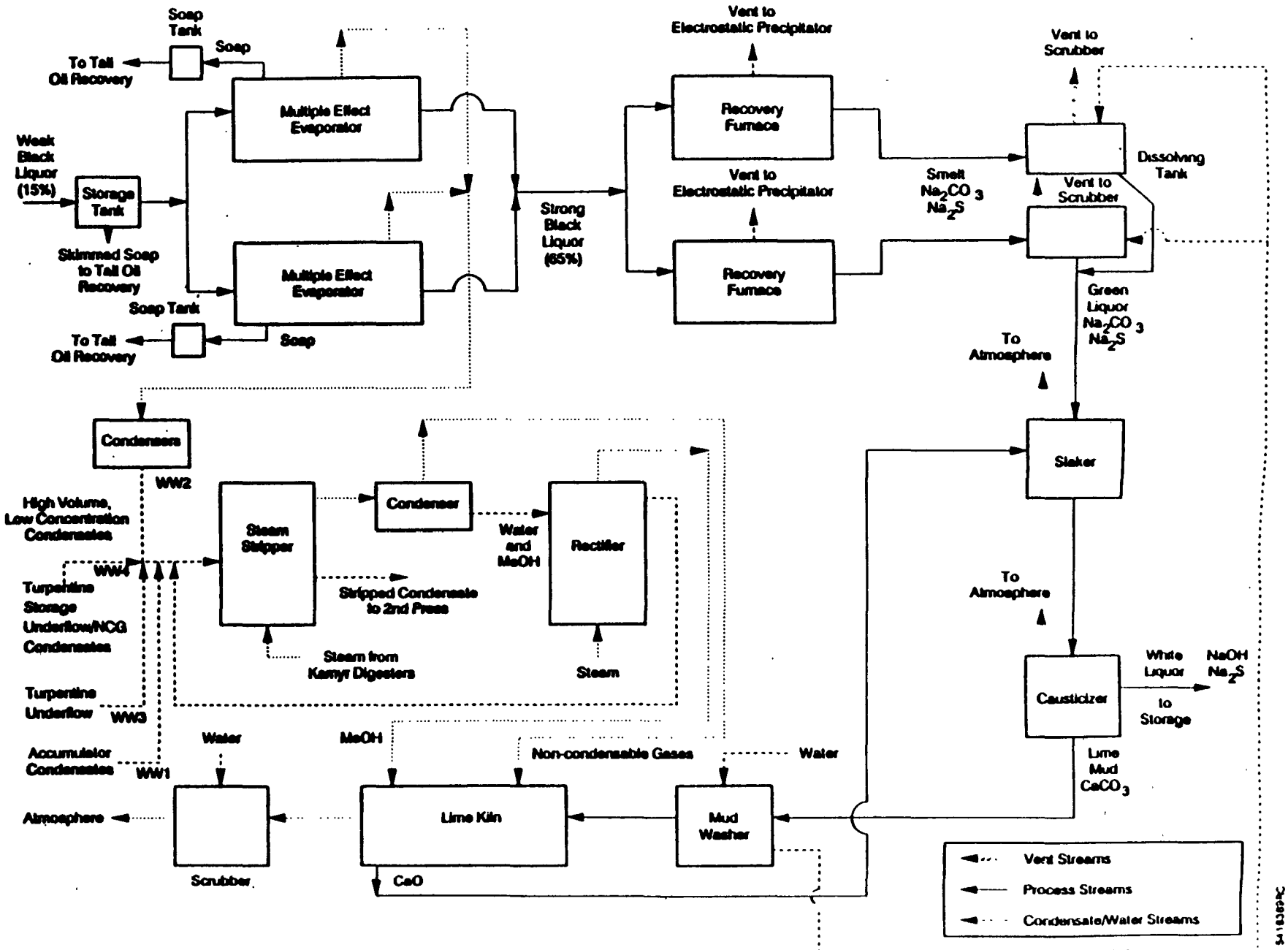

Figure A-4. Chemical Recovery at Site 1

evaporators. The concentrated liquor is then combined and combusted in two parallel recovery furnaces. The offgases from the evaporators are vented to an electrostatic precipitator (ESP). The smelt, which contains sodium carbonate (Na_2CO_3) and sodium sulfide (Na_2S), from the combustion of the black liquor in the furnaces is mixed with water in the dissolving tank to form green liquor. The green liquor is mixed with calcium oxide (CaO) to form calcium hydroxide ($Ca(OH)_2$) in the slaker. This mixture flows to the causticizer to form white liquor (NaOH and Na_2S). The white liquor is stored for reuse in the digestion process. The $CaCO_3$, called lime mud, is first washed in the mud washer, then combusted in the lime kiln to recover CaO, which is reused in the causticizing process.

The evaporator system condensates form two streams, one with a lower volume and high concentration of volatiles and a second with a high volume and lower concentration of volatiles. The high volume stream is recycled in the mill for various uses and the low volume stream is combined with the accumulator condensates from hardwood pulping and turpentine underflow from softwood pulping to be steam stripped. The stripper is charged with waste steam from the Kamyr digesters. The liquid stream exiting the steam stripper is used as wash water for the second washer of the oxygen delignification section. The exiting vapor stream is condensed. The noncondensible gases are sent to the lime kiln and the condensate, consisting of primarily methanol and water, is sent to a rectifier.

The vapor exiting the rectifier consists primarily of methanol and is routed to the lime kiln. The water stream is combined with the evaporator condensates and accumulator condensates that enter the first steam stripper.

Oxygen delignified pulp is bleached in one of two 3-stage bleach lines. Site 1 has one bleach line dedicated to hardwood pulp and one line dedicated to softwood pulp. The bleaching lines are similar and presented in Figure A-5. The 3-stage sequence consists of chlorine/chlorine dioxide (C/D) stage, an

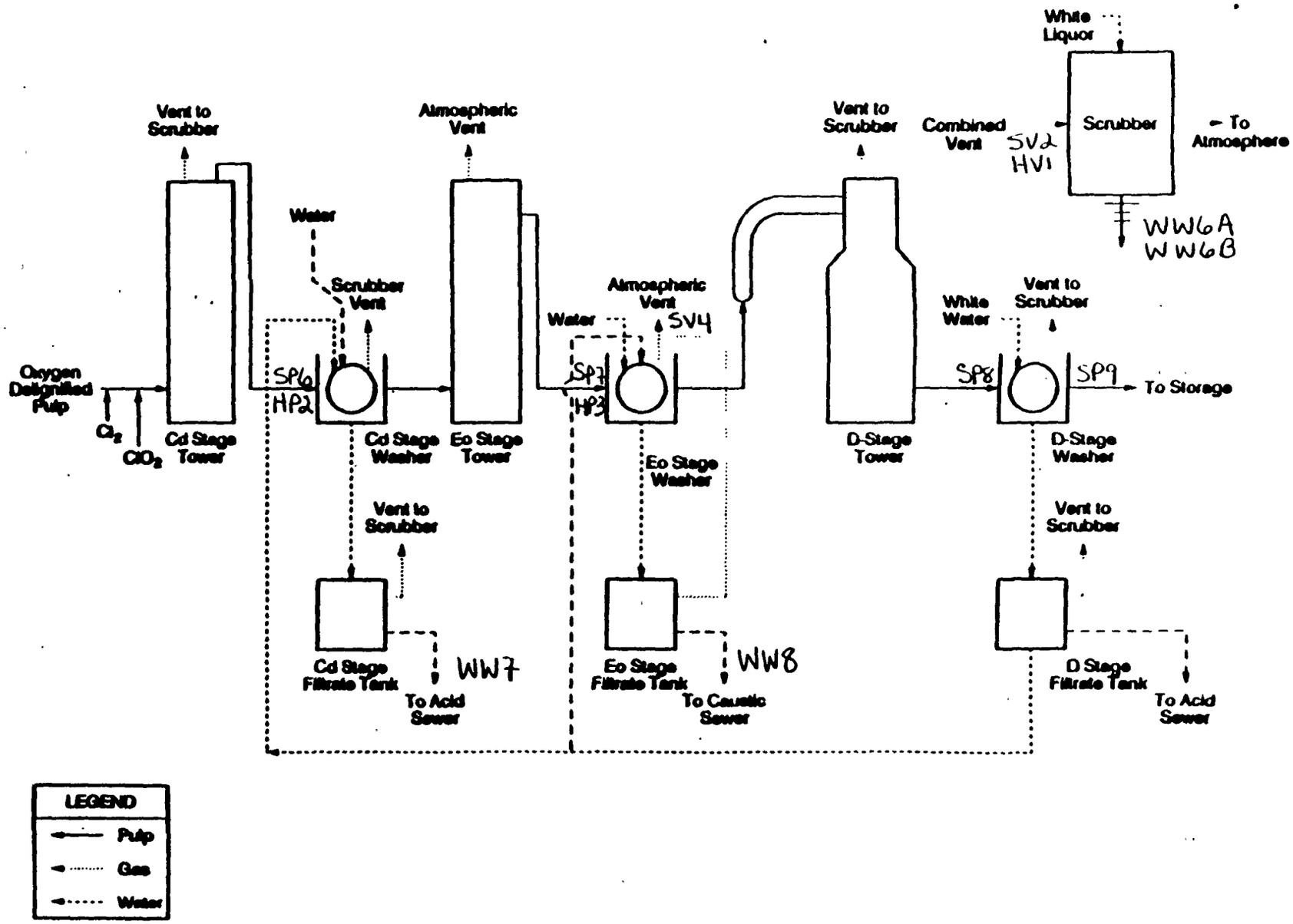

Figure A-5. Bleaching Process at Site 1

extraction with oxygen (Eo) stage, and a chlorine dioxide (D) stage. There are two differences between the two lines. The first difference is the bleaching capacity. The hardwood line has a 600 ton per day capacity and the pine has an 800 ton per day capacity. The second difference is the chlorine dioxide substitution rate. The chlorine dioxide substitution rate, as active chlorine, for the pine pulp line is 50 percent and is 15 percent for the hardwood pulp line. After treatment in each bleaching tower, the pulp is washed prior to entering the next stage. The wash water from the D-stage is recycled in the C/D stage and Eo stage washers. Filtrate from the C/D and Eo-stages is sewered in the acid and caustic sewer, respectively. The bleached pulp is then stored in towers prior to use in paper production.

The objectives of the test program at this facility were to characterize kraft hardwood digested pulp, kraft softwood digested pulp and weak black liquor, kraft softwood oxygen delignificaiton, kraft wastewater from both the pulping and bleaching areas of the mill, kraft softwood bleaching with 50 percent chlorine dioxide substitution, and kraft hardwood bleaching with 15 percent chlorine dioxide substitution. Other objectives were to quantify air emissions of total VOC and several specific compounds of concern from process vents.

Air emission tests were conducted at two locations in the hardwood bleach plant and three locations in the softwood pulp mills and bleach plant. These are listed in Table A-1 along with the identifiers for each sampling location. Several test methods were used to measure emissions of the various constituents of concern. Table A-2 presents average emission rates for each constituent of concern as measured at each of the five measurement locations. All measurement points and measurement methods are identified in the table.

Process liquid sampling was conducted in 6 different areas of the facility. Table A-3 identifies these areas and the points at which samples were taken in each area. The identifier for

Table A-1. Gas Sampling Locations at Site 1

Location	Identifier
Hardwood Plant	
Vent into hardwood bleach plant scrubber	HV1
Hardwood D stage vent/wash and tower seal tank	HV1A
Softwood Plant	
O_2 delignification blow tank vent	SV1
Vent into bleach plant scrubber	SV4
Combined vent from EOwasher/filtrate tank	SV5

Table A-2. Measured Vent Emission Rates at Site 1
(lb/hr)

	Measurement Points				
COMPOUND	SV1	SV2	SV4	HV1	HV1A
Acetone[a]	0.0554	0.0784	0.0124	NA	NA
Acetone[b]	0.0912	0.00904	0.01004	NA	NA
Acrolein	NA	4.01E-4[c]	0.000441[d]	NA	NA
MeK[a]	0.000567	0.00296	0.00289	NA	NA
MeK[b]	0.0160	6.29e-4[c]	1.82e-4[c]	NA	NA
Chloroform[b]	NA	0.795	0.0435	NA	NA
Methanol[b]	2.16	0.0747	0.0260	NA	NA
HCL[f]	NA	0.0288	NA	NA	NA
CL_2[f]	NA	0.212	NA	NA	NA
α-pinene[g]	0.116[h]	2.17e-6[c]	NA	NA	NA
ß-pinene[g]	0.0617[h]	7.15e-5[i]	NA	NA	NA
THC[j]	4.320	0.863	0.600	0.476	0.377

[a] - Obtained using EPA Method 0011.
[b] - Obtained using NCASI Methanol method.
[c] - Value below detection limit of method.
[d] - Estimated value below calibration limit.
[e] - Value below quantitation limit.
[f] - Obtained using EPA Method 26A.
[g] - Obtained using EPA Method 0010.
[h] - Estimated value above quantitation limit.
[i] - Estimated value below quantitation limit.
[j] - Obtained using EPA Method 25A.
NA - Not applicable

TABLE A-3. Liquid Stream Sampling Locations at Site 1

Location	Identifier
• Softwood Bleach Plant	
- Pulp into Cd tower	SP5
- Pulp out of Cd tower	SP6
- Pulp out of Eo tower	SP7
- Pulp out of D tower	SP8
- Pulp out of D washer	SP9
- Wastewater from bleach plant scrubber	WW6A&B
- Softwood acid sewer	WW7
- Softwood caustic sewer	WW8
• Softwood O_2 Delignification System	
- Influent to delignification tower	SP3
- Pulp out of O_2 delignification blow tank	SP4
• Hardwood Bleach Plant	
- Pulp out of Cd tower	HP2
- Pulp out of Eo tower washer	HP3
• Softwood Diffusion Washer and Weak Black Liquor	
- Pulp into diffusion washer	SP1
- Weak black liquor	SP2
• Hardwood Vacuum Drum Washer	
- Pulp into brownstock washer	HP1
• NCG System/Digester Condensates	
- Hardwood accumulator condensates	WW1
- Combined evaporator (foul) condensates	WW2
- Turpentine decanter underflow	WW3
- Turpentine storage underflow/ NCG system condensates	WW4

each sampling point is also given.

Liquid process samples were analyzed using high performance liquid chromatography/gas chromatography (HPLC/GC) to quantify pulping and bleaching compounds. Some of the samples were also analyzed using proposed Method 25D and proposed Method 305. Table A-4 presents the average concentration of selected compounds identified in the process stream samples. Additional details of the field sampling results can be found in the full test reports.[1,2]

A.2.2 Site 2. Site 2 produces more than 2500 tons of paper products, including creped paper, grocery bags, and corrugated boxes. Both kraft and neutral sulfite semi-chemical (NSSC) pulping are practiced at this facility. Approximately 2153 tons per day of kraft pulp is produced exclusively from softwood and approximately 144 tons per day of NSSC pulp is produced exclusively from hardwood. In addition, an old corrugated container (OCC) plant produces pulp from bales of OCC purchased from other sources. An overview of the processes at the site are presented in Figure A-6.

Sampling points from Site 2 are located in the pulping and bleaching process areas of the mill. Figures A-7 and A-8 present process flow diagrams of wood preparation and pulping for the kraft and NSSC processes, respectively. In the kraft process (Figure A-7), screened chips and white liquor are added to 21 batch digesters and 2 Kamyr digesters, one of which operates with a modified continuous cook. The pulp from the batch digesters is sent to five blow tanks. Undersized chips and sawdust are cooked with white liquor in three continuous sawdust digesters and transferred to a common blow tank. The pulp from all six blow tanks is sent to brownstock washing, while the pulp in the Kamyr digesters is washed within the Kamyr vessel and then sent to a diffusion washer.

In the NSSC digestion process (Figure A-8), chips, sawdust and pink liquor are cooked in two continuous digesters. Pulp

Table A-4. Measured Constituent Concentrations at Site 1 (ug/mL)

	Measurement Points																		
Compound	SP5	SP6	SP7	SP8	SP9	WW6	WW7	WW8	SP3	SP4	HP2	HP3	SP1	SP2	HP1	WW1	WW2	WW3	WW4
Acetone (a)	5.03	0.497	0.305	0.419	0.37	0.309	0.023	0.145	0.745	5.03	0.69	0.188	15.24	0.542	4.41	3.97	7.69	278	15.2
Methyl ethyl ketone (a)	0.419	0.127	0.239	0.252	0.034	0.017	0.13	0.005	0.023	0.419	0.213	0.103	0.39	0.105	0.144	1.46	1.96	44.2	4.48
Methanol (b)	83.9	208	68.4	22.6	<15.0	36.3	257	54.5	178.2	1,901	348	178	1,098		574	3,247	6,374	63,118	3,839
Acrolein (a)		0.043	0.011	0.042	0.048	0.033	0.014	0.002			0.975	0.028							
Methylene chloride (c)		<0.02	0.02	<0.02	<0.03	<0.02	0.57	<0.02			<0.02	<0.02							
Chloroform (c)		0.85	0.04	0.13	<0.04	<0.03	0.77	0.14			3	0.05							
Chlorides (d)		975	468	635	9.06	2,712	910	468			891	436							
Carbon disulfide (e)		2.75													0.036				
Chloroform (e)		487	30.1																
n-Hexane (e)		0.82	0.83																
Chloromethane (e)		24.3																	
2-Butanone (e)		4.61	12.5												0.151				
Iodomethane (e)		0.52																	
Methylene Chloride (e)		16.2	22																
Toluene (e)		2.36	2.73												0.01				
1,1,1-Trichloroethane (e)		4.3	12.8												0.152				
Acetone (e)		104	269												0.544				
Dichloroacetonitrile (e)		13.9																	
Dichlorothiophene (e)		16.4																	
Siloxane (e)		0.6																	
Acetophenone (f)		5	13.1																
2,4,5-Trichlorophenol (f)		33.3	37.6																
2,4-Dichlorophenol (f)		16	13.4																
Benzaldehyde (f)		57.6	50																
Benzoic acid (f)		53.9	115																
4-Methoxy-1-naphthalene-carboxaldehyde (f)		59.5	1340																
Benzyl alcohol (f)		31.1	9.5																
4,5-Dichloro-2-methoxy-phenol (f)		12.9	316																
Methoxydichlorophenol (f)			168																
Alkyl acid (f)			37.3																
Hexacanoic acid (f)			203																
Dimethyl sulfide (e)														56.3	13.2				
Dimethyl disulfide (e)														4.15	3.39				
a-pinene (e)														30		<0.02	0.67	0.04	0.043
b-pinene (e)														12.4					
Siloxane (e)														0.4					
a-Terpineol (f)															0.072				
Aromatic ketone (f)															0.332				
Dimethoxyphenol (f)															2.49				
Phthlatate (f)															0.722				
Trithiolane (f)															3.87				
Methoxyphenol (f)															2.95				
Tetrathiane (f)															0.104				
Dimethyl trisulfide (f)															1.76				
Total VO concentration (ppm) (g)													1,053	570	106	840		13,667	1,433

a - Obtained using Method 0011.
b - Obtained using NCASI-Methanol.
c - Obtained using MCASI-chloroform/methylene chloride.
d - Obtained using Method 26A.
e - Obtained using M8240 analyses.
f - Obtained using M8270 analyses.
g - Obtained using Method 25D.

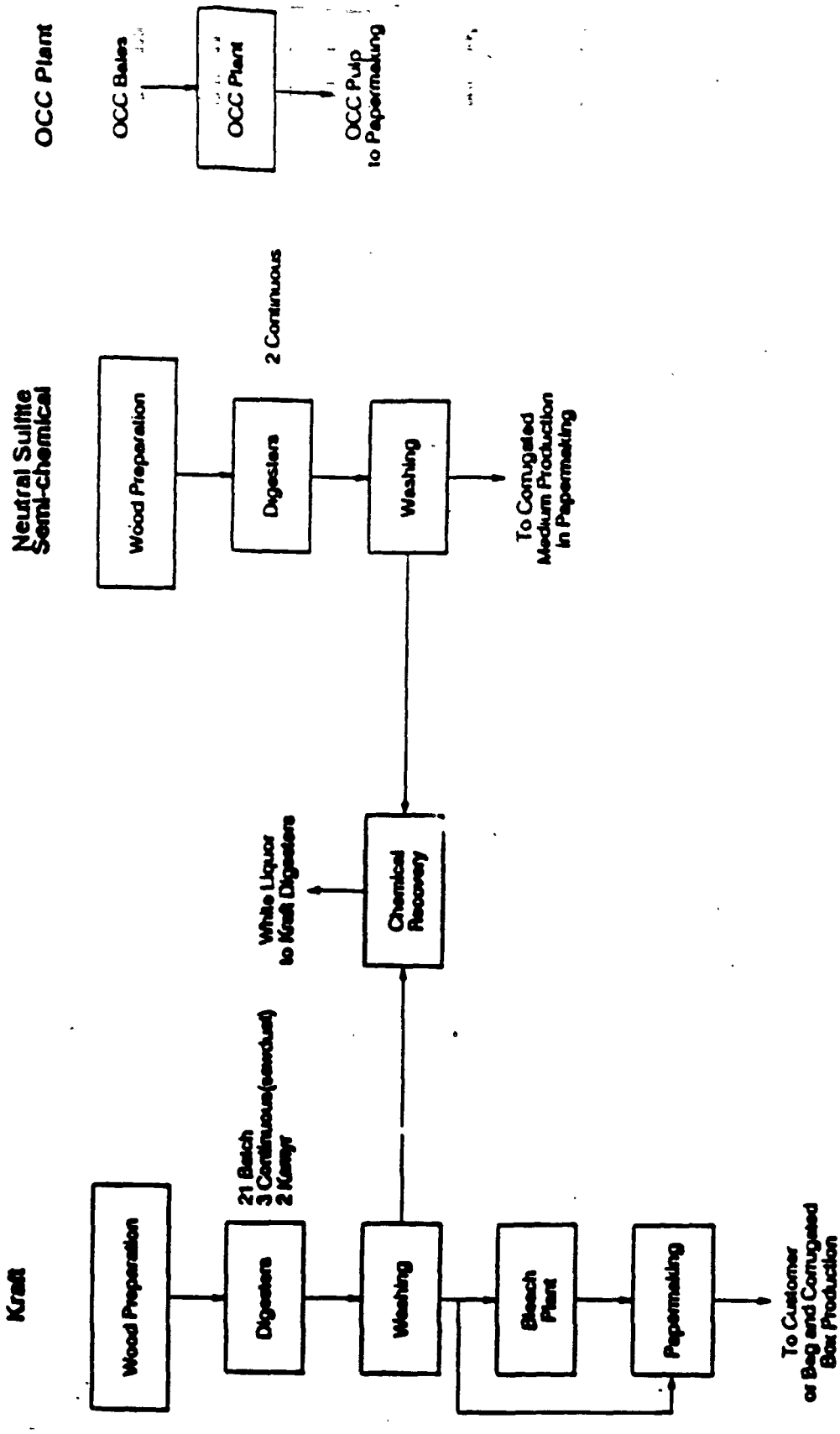

Figure A-6. General Process Diagram for Site 2

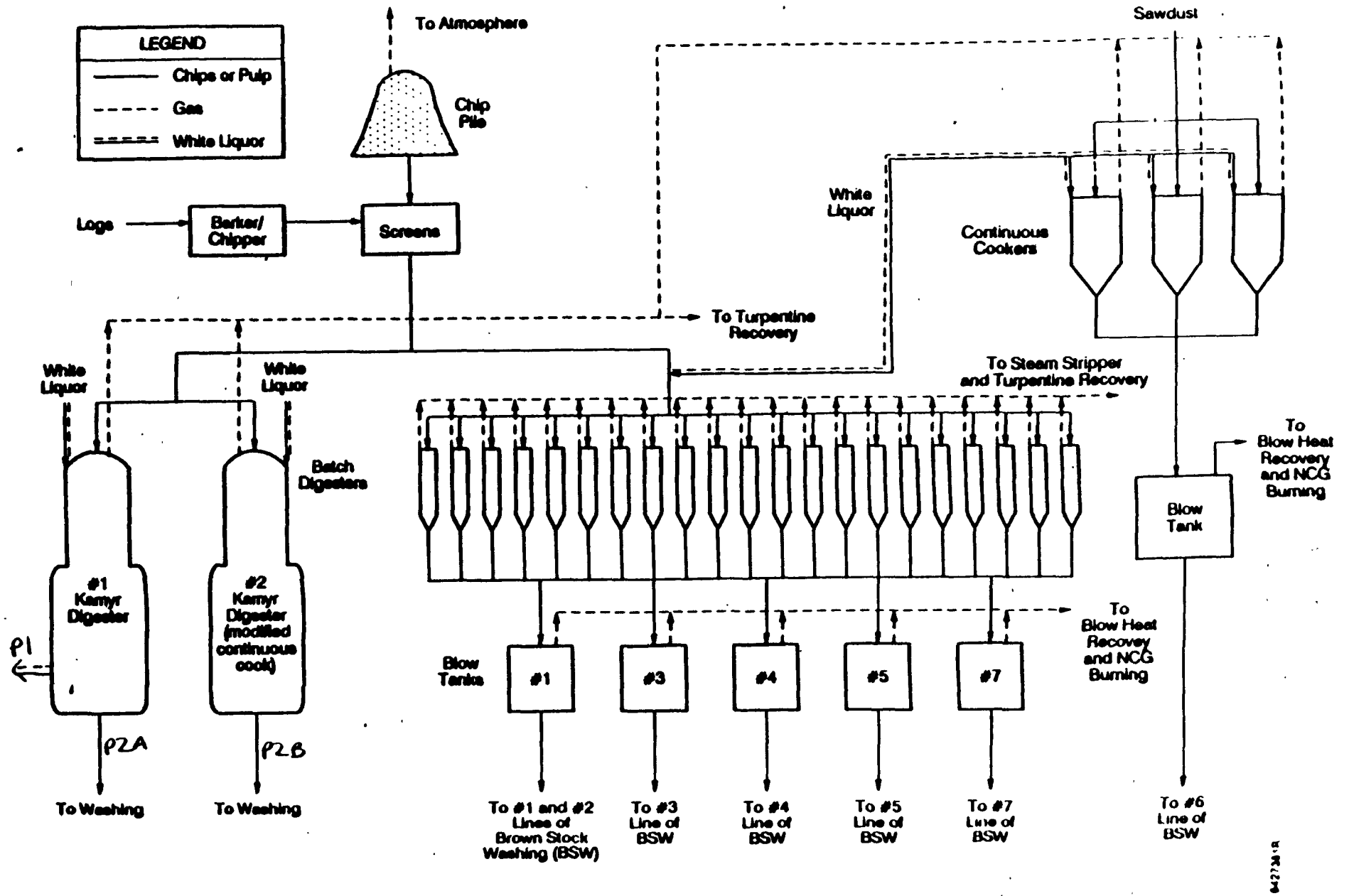

Figure A-7. Wood Preparation and Kraft Pulping at Site 2

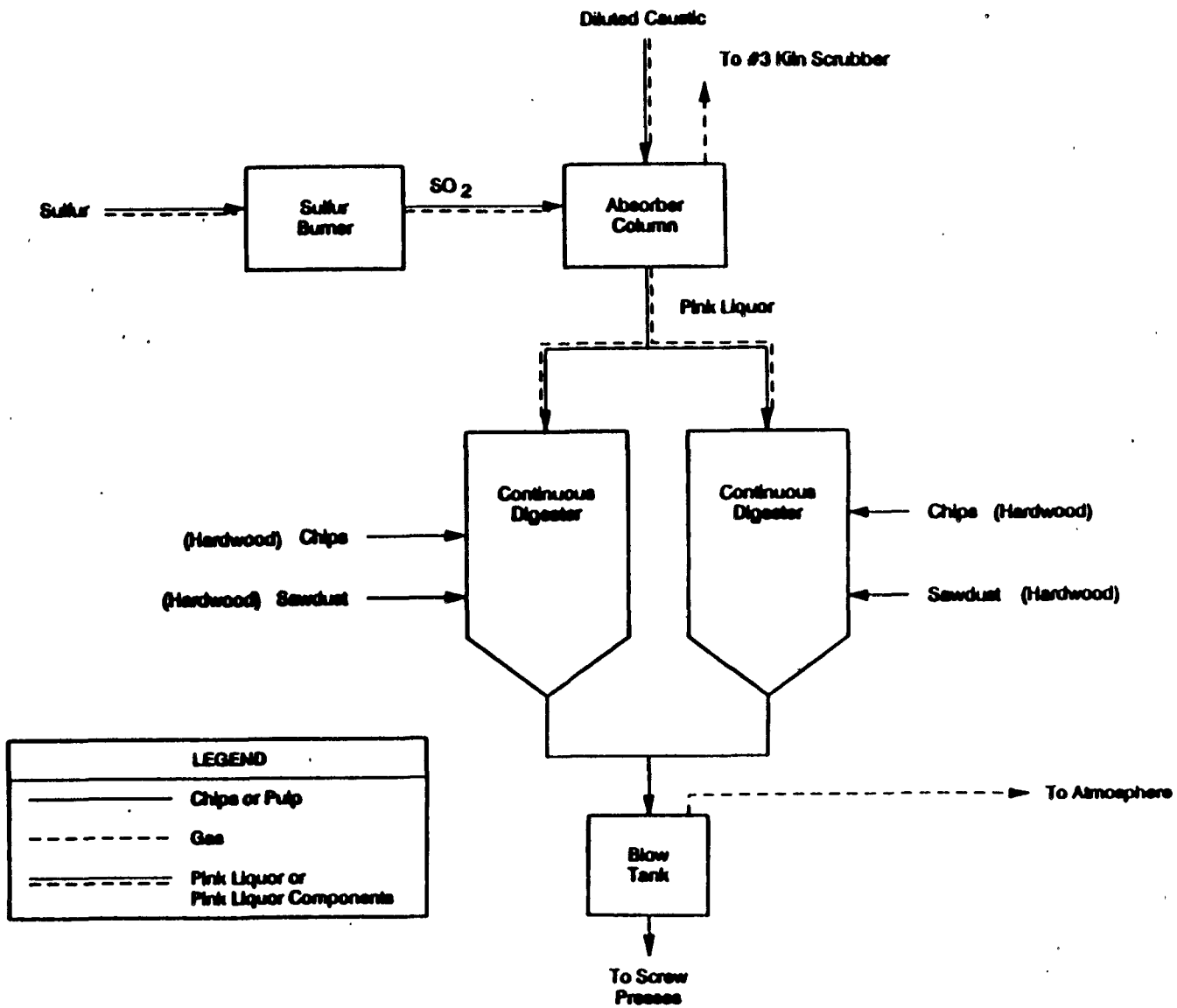

Figure A-8. Neutral Sulfite Semi-chemical Pulping at Site 2

from the digesters is transferred to a common blow tank and then sent to the screw presses for washing.

The washing systems for both the kraft batch and continuous pulp are shown in Figure A-9. In the batch process, pulp from the blow tanks is washed in 4-stage countercurrent brownstock washing system. In the continuous process, pulp from the Kamyr digesters is washed in a 2-stage diffusion washer, screened, and thickened in a decker.

The NSSC washing process is presented in Figure A-10, where screw presses are used to wash the NSSC pulp. The NSSC pulp is then transferred to primary refining, high-density storage, secondary refining, low density storage, and finally to corrugated medium production.

In chemical recovery system at Site 2, weak black liquor from brownstock washing and the Kamyr digesters is combined with spent pink liquor from the NSSC screw presses, and sent to an evaporation system to thicken the liquor. After evaporation, a portion of the black liquor is oxidized and then burned in the recovery furnaces. The remaining black liquor is sent to a concentrator and then burned in the recovery furnaces. Smelt from the recovery furnaces flows into a dissolving tank where filtrate from lime recovery dissolves the smelt to form green liquor, and the dregs (impurities) are removed in a clarifier. The clarified green liquor is mixed with lime in a slaker. The slurry formed in the slaker is agitated in a causticizing tank to form white liquor and lime mud. White liquor is removed from the lime mud and is recycled for use in the kraft digesters. The lime mud is calcined in the lime kiln to make lime which is used in the slakers.

Condensible gases from the evaporators, digesters, and blow tank vents are steam stripped and sewered, recycled to brownstock washing or sent to lime recovery. The overheads from the steam stripper are vented to the turpentine recovery system. Turpentine is decanted from the turpentine recovery condensibles and the remaining liquid is routed back to the steam stripper.

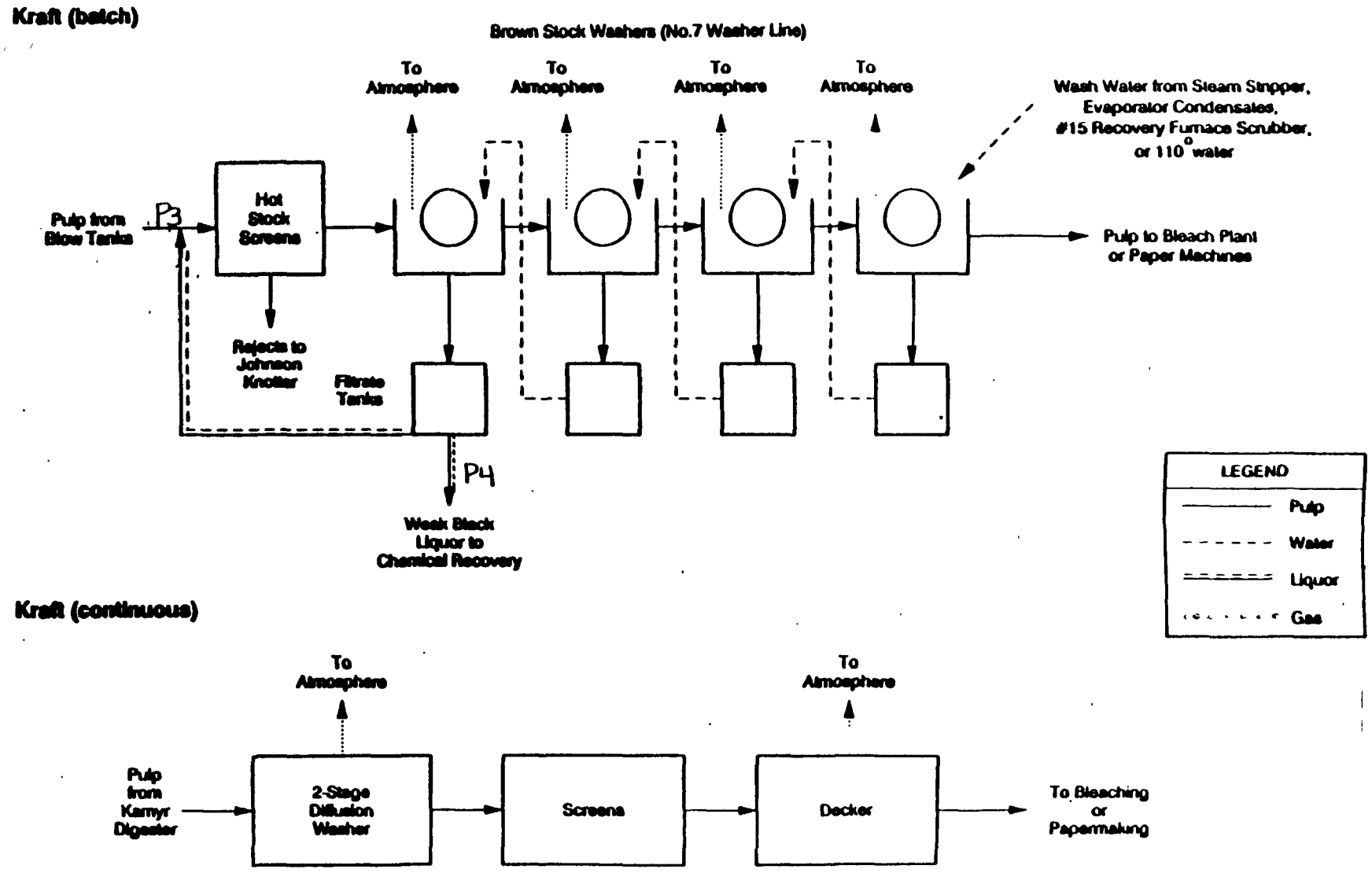

Figure A-9. Kraft Pulp Washing at Site 2

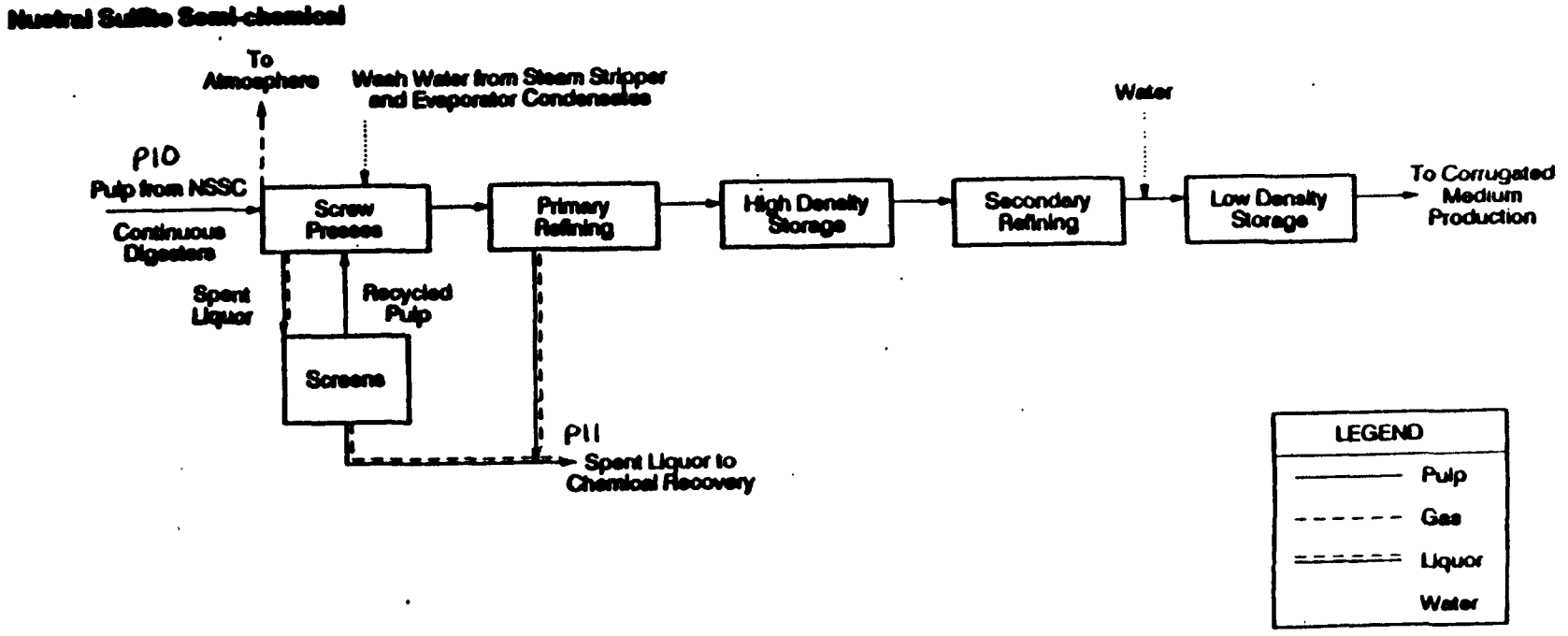

Figure A-10. Neutral Sulfite Semi-chemical Washing at Site 2

Noncondensible gases from turpentine recovery and the evaporators, digesters, and blow tanks are sent to the NCG collection system.

The bleaching sequence at Site 2 is CEHD (chlorination with approximately 5 to 40 percent chlorine dioxide substitution, extraction, calcium hypochlorite, and chlorine dioxide). Figure A-11 presents the flow through one of two similar bleach plants at Site 2. Fresh water is used as wash water for all of the bleaching washers. The chlorine tower and washer, the chlorine dioxide tower and washer and the foam tower are vented to a caustic scrubber. The filtrates from the extraction and hypochlorite washers are routed to the alkaline sewer. The chlorine and chlorine dioxide washer filtrates are routed to the acid sewer.

Objectives of the field tests at site 2 were to characterize the compounds present in kraft weak black liquor, kraft digester and blow tank offgas condensates, acid sewer, caustic sewer, and bleach plant scrubber effluent. Objectives also included characterization of compounds present in and quantification of air emissions from kraft bleaching with low chlorine dioxide substitution, comparison of normal digestion to extended cook digestion, and characterization of neutral sulfite semi-chemical digestion. Both process liquid and air emission samples were collected and analyzed as a part of the program at site 2.

Air emission tests were conducted at 4 locations at this site: the E washer vent, the H tower vent, the H washer hood, and the bleach plant scrubber inlet. These sampling locations are listed in Table A-5 along with the identifier for each location. A summary of the average vent emissions of identified constituents is given in Table A-6.

Process stream samples were collected at a number of locations throughout the plant. Table A-7 lists the locations and shows the identifier used for each location. Sample analyses consisted of a whole waste analysis using HPLC, GC/FID, and GC/ECD. The relative emission potential was measured using EPA

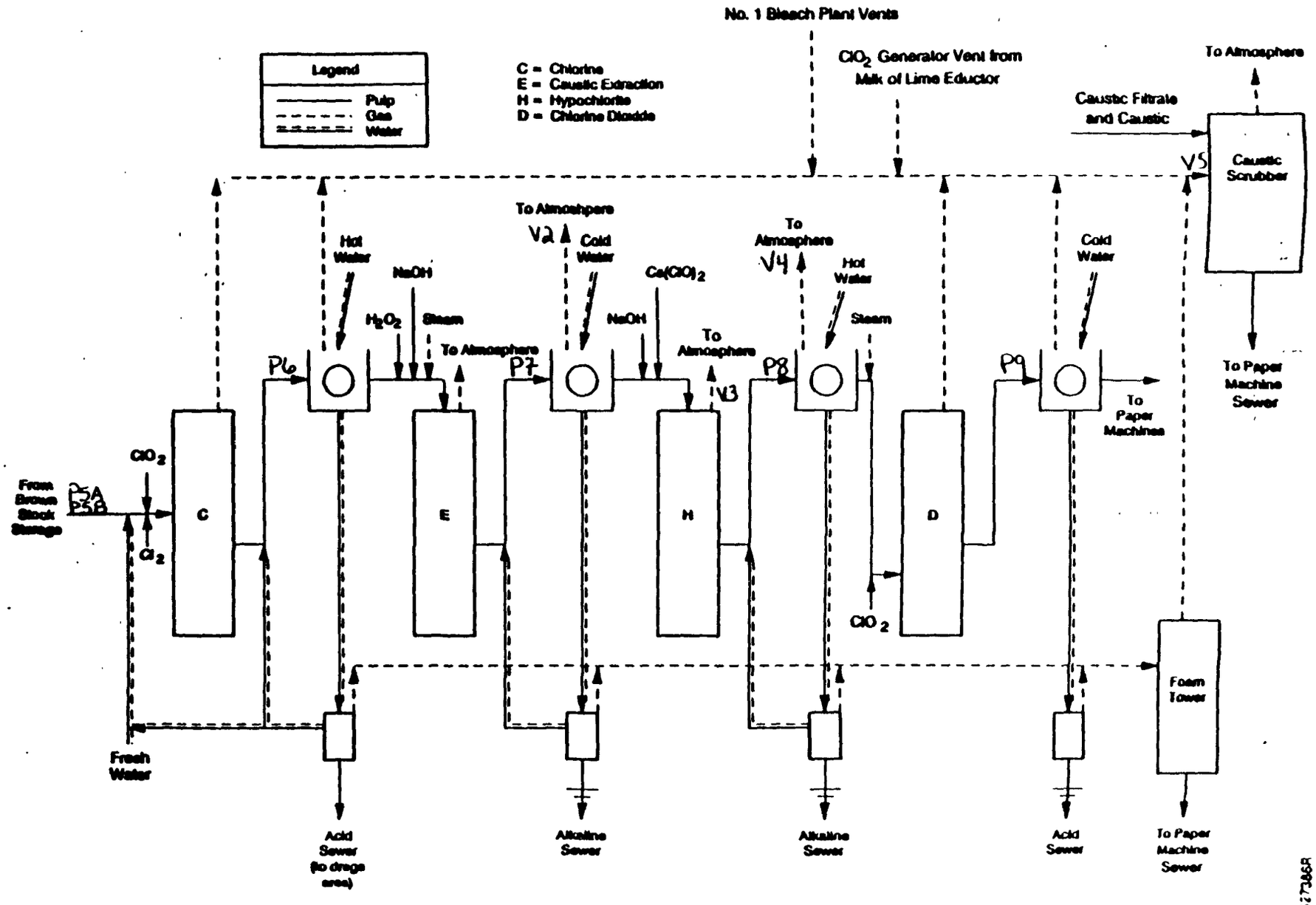

Figure A-11. Bleaching Process at Site 2

Table A-5. Gas Sampling Locations at Site 2

Location	Identifier
E washer vent	V2
H tower vent	V3
H washer hood	V4
Bleach plant scrubber inlet*	V5

* Refer to Figure A-11 for details of the processes vented into this scrubber.

Table A-6. Summary of Average Vent Emissions at Site 2 (lb/hr)

Constituent	Measurement Points			
	V2	V3	V4	V5
Acetaldehyde[a]	0.001	NA	0.002	0.002
Acetone[a]	--	NA	0.001	0.005
Acetone[b]	0.000	NA	NA	0.016
Acrolein[a]	--	NA	0.002	0.045
Chlorine[c]	0.010	NA	0.044	53.121
Chlorine[d]	--	NA	0.071	5.187
Chlorine Dioxide[d]	--	NA	0.011	1.305
Chloroform[d]	0.171	NA	0.301	2.863
Chloroform[b]	0.012	NA	NA	0.059
Formaldehyde[a]	0.001	NA	0.001	0.013
Hydrogen Chloride[c]	0.007	NA	0.011	1.131
Methanol[a]	0.083	NA	0.622	2.042
Methyl Ethyl Ketone[a]	0.000	NA	0.002	0.030
Methyl Ethyl Ketone[b]	--	NA	NA	0.000
Methylene Chloride[d]	0.011	NA	0.012	0.126
Methylene Chloride[b]	0.004	NA	NA	0.011
Propionaldehyde[a]	--	NA	0.000	0.014
Benzene[b]	--	NA	NA	0.001
Carbon Tetrachloride[b]	--	NA	NA	0.003
1,1-Dichloroethane[b]	--	NA	NA	0.001
Chloromethane[b]	0.000	NA	NA	0.010
Toluene[b]	0.000	NA	NA	0.001
Bromodichloromethane[c]	0.000	NA	NA	0.007
α-Pinene[b]	0.001	NA	NA	0.001
p-Cymene[b]	0.000	NA	NA	0.001
α-Pinene[f]	0.002	NA	NA	0.000
Total Hydrocarbons	0.063	0.974	0.121	0.872

[a] - Obtained using Method 0011.
[b] - Obtained using Volatile Organic Sampling Train.
[c] - Obtained using Method 26A.
[d] - Obtained using NCASI.
[e] - Obtained using 8240 analyses.
[f] - Obtained using Semivolatile Organic Sampling Train.
-- Not analyzed
NA - Not applicable

Table A-7. Liquid Process Stream Sampling Locations at Site 2

Location	Identifier
Weak black liquor from Kamyr digester	P1
Pulp out of Kamyr digester	P2a
Pulp out of Kmyr digester - extended cook	P2b
Pulp into brownstock washer No. 7	P3
Weak black liquor from brownstock washer N	P4
Soft pulp into C & D washer	P5
Pulp into C & D washer	P6
Pulp into E washer	P7
Pulp into H washer	P8
Pulp out of D washer	P9
Pulp into screw press	P10
Spent liquor from screen press	P11
Bleach plant scrubber wastewater	WW1
Digester & blow tank off gas condensates	WW4
C stage filtrate	WW5

Method 25D. Samples from some of the measurement points were also analyzed for volatile organic compounds in accordance with procedures in Method 8240 and for semivolatile organic compounds in accordance with procedures in Method 8270. Table A-8 presents the results of the whole waste analysis and for the volatile and semivolatile organic compound analyses. Additional details of the field test program at site 2 are available from the individual test reports for the site.[3,4]

A.2.3 Site 3. Site 3 is a fully integrated kraft pulp and paper mill. Feedstock consists mainly of softwood chips. Occasionally up to 10 percent hardwood is used. The facility produces 250 tons per day of bleached and semi-bleached kraft market pulp and 1000 tons per day of kraft unbleached and bleached linerboard, grocery bags, and saturated and converting papers. An overview of the processes at the site are presented in Figure A-12.

Sampling points from Site 3 are located in the pulping, chemical recovery, and bleaching process areas of the mill. Figure A-13 presents the process flow diagram for wood preparation and digestion. Softwood chips are fed into the digesters along with white liquor. Site 3 cooks their chips in six batch digesters and two Kamyr continuous digesters. One blow tank serves all six batch digesters, while each Kamyr discharges to a separate tank. All the digesters vent to the turpentine recovery system, while the blow tanks vent to condensers. The condensates are sewered and the noncondensibles are routed to a vapor sphere. The vapor sphere serves as a collection unit for the noncondensible gas system and is expandable to handle variations in gaseous flow. Pulp and liquor separated from digester gases in the blow tanks are then sent to the brownstock washers.

Figure A-14 presents the brownstock washing configuration at Site 3. Pulping liquor from the batch digesters is washed in a three stage countercurrent vacuum washer (Washer No. 2). Fresh

Table A-8. Measured Constituent Concentrations at Site 2 (ug/mL)

	Measurement Points															
Compound	P1	P2a	P2b	P3	P4	P5	P6	P7	P8	P9	P10	P11	WW1	WW4	WW5	WW6
Formaldehyde (a)	3.2	0.03	27	3.4	4.7	0.643	0.352	0.567	0.732	8	0.97	0.97	0.49	2.5	1.28	0.44
Acetaldehyde (a)	1.1	<0.008	4.6	0.032	0.11	0.018	0.032	0.016	0.058	<0.16	<0.008	<0.008	0.01	<0.008	0.01	0.01
Acetone (a)	29	17	46	30	43	0.212	0.540	0.267	0.283	1.4	0.26	0.27	0.26	14	0.18	0.08
Acrolein (a)	<0.01	<0.01	<0.20	<0.01	<0.01	0.010	<0.01	<0.01	<0.01	<0.20	1.5	1.8	<0.01	<0.01	<0.01	<0.01
Propionaldehyde (a)	2	0.33	9.1	0.38	0.36	0.050	0.063	0.053	0.080	1.3	<0.01	<0.01	0.07	0.13	0.03	0.1
Methyl ethyl ketone (a)	0.34	0.14	1.5	<0.01	<0.01	0.083	0.597	0.075	0.510	0.83	<0.01	0.06	0.08	7.3	0.05	0.05
a-Pinene (a)	2.2	51	1.4	ND	ND	ND	--	--	--	--	ND	ND	--	<1	--	--
b-Pinene (a)	<1	10	ND	ND	ND	ND	--	--	--	--	ND	ND	--	ND	--	--
Methylene chloride (a)	--	--	--	--	--	--	2.450	2.150	2.500	2.5	--	--	2.4	--	2.6	2.5
Chloroform (a)	--	--	--	--	--	--	0.620	<0.05	4.183	0.56	--	--	<0.50	--	<0.50	1.5
Methanol (a)	615	785	340	296	273	36.650	72.183	13.750	21.333	ND	134	136	14	1,598	57	<5
Carbon disulfide (b)		ND	0.05	0.05			0.065	0.002	0.018							
Carbon tetrachloride (b)		ND	ND	ND			0.001	ND	ND							
Chloroform (b)		0.0035	0.012	ND			0.313	0.090	0.603							
Dibromomethane (b)		ND	ND	ND			ND	0.001	0.000							
1,1-Dichloroethane (b)		ND	ND	0.018			0.002	ND	ND							
n-Hexane (b)		0.0555	0.0055	ND			ND	ND	ND							
Bromomethane (b)		ND	0.003	ND			0.003	ND	ND							
Chloromethane (b)		ND	ND	0.15			ND	ND	0.000							
2-Butanone (MEK) (b)		0.33	0.335	ND			0.019	0.009	ND							
Iodomethane (b)		ND	ND	0.08			ND	ND	ND							
Methylene chloride (b)		0.2845	0.037	ND			0.003	0.002	0.002							
Styrene (b)		0.003	ND	0.033			ND	ND	ND							
Toluene (b)		0.1325	0.025	ND			0.001	0.003	0.008							
Trichloroethene (b)		ND	ND	ND			ND	0.001	ND							
Vinyl chloride (b)		ND	ND	ND			ND	0.000	ND							
m-/p-Xylene (b)		0.0215	ND	0.48			ND	ND	ND							
Acetone (b)		0.635	0.525	ND			0.061	0.036	0.028							
Bromodichloromethane (b)		ND	ND	ND			0.001	ND	0.010							
1,3-Dichlorobenzene (b)		0.0185	ND	0.13			ND	ND	ND							
Dimethyl sulfide 9b)		18	6.95	0.28			ND	ND	ND							
Dimethyl disulfide 9b)		1.9	2.1	0.024			ND	ND	ND							
a-Pinene (b)		4.6	2.15	0.008			ND	0.000	0.000							
b-Pinene (b)		1.4	0.96	0.002			ND	ND	ND							
p-Cymene (b)		0.24	0.0955	0.11			ND	ND	ND							
3,4-Methylphenol (c)		0.0895	ND	ND			ND									
Pentachlorophenol (c)		ND	2.45	5.5			ND									
Phenol (c)		2.65	ND	ND			ND	0.004	ND							
a-Pinene (c)		3.1	0.041	ND			ND									
b-Pinene (c)		0.815	ND	0.85			ND									
a-Terpineol (c)		8.05	ND				ND									

a - Obtained using whole waste analyses (HPLC/GC)
b - Obtained using Method 8240
c - Obtained using Method 8270
-- Not analyzed
ND - Not detected

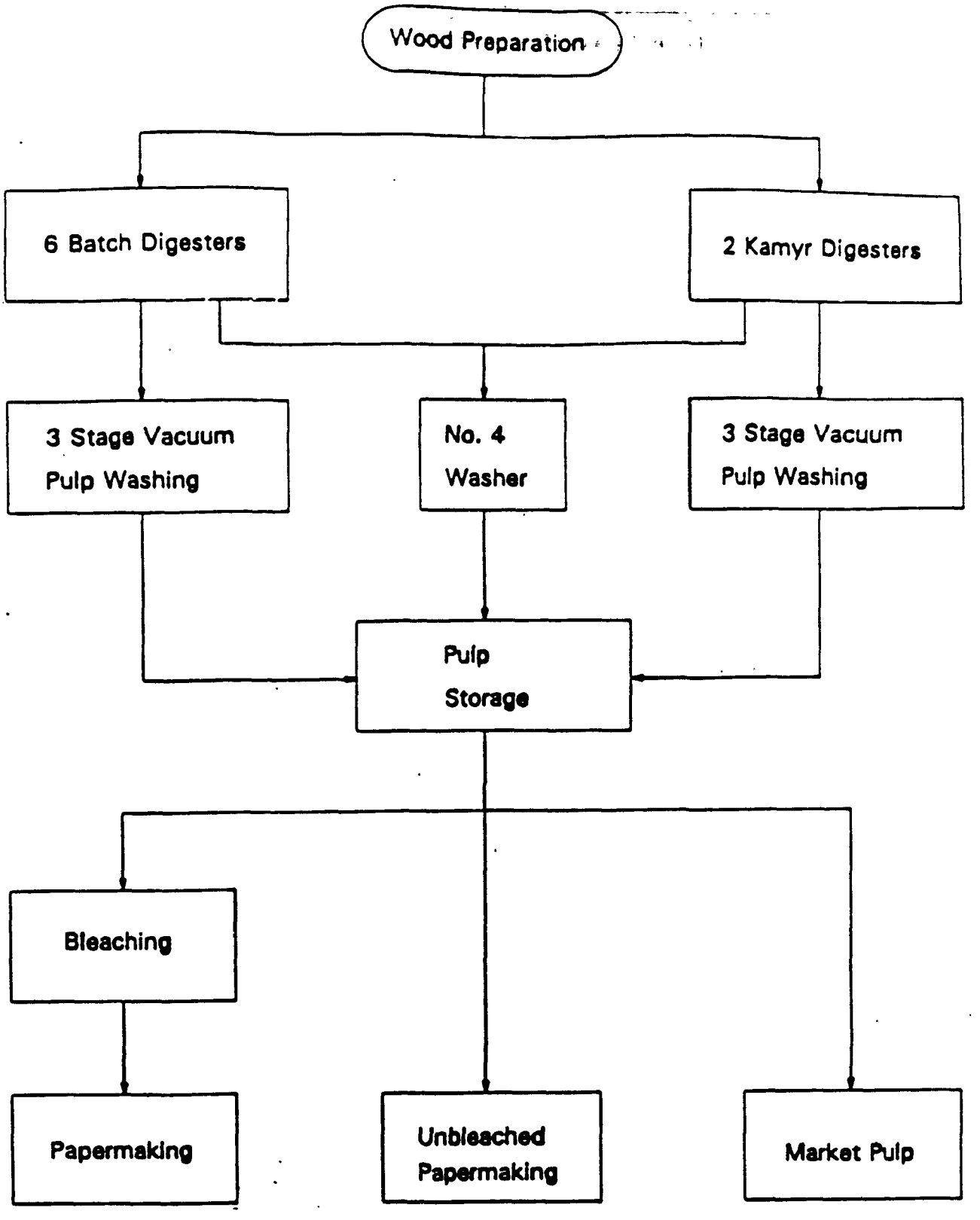

Figure A-12. General Process Diagram for Site 3

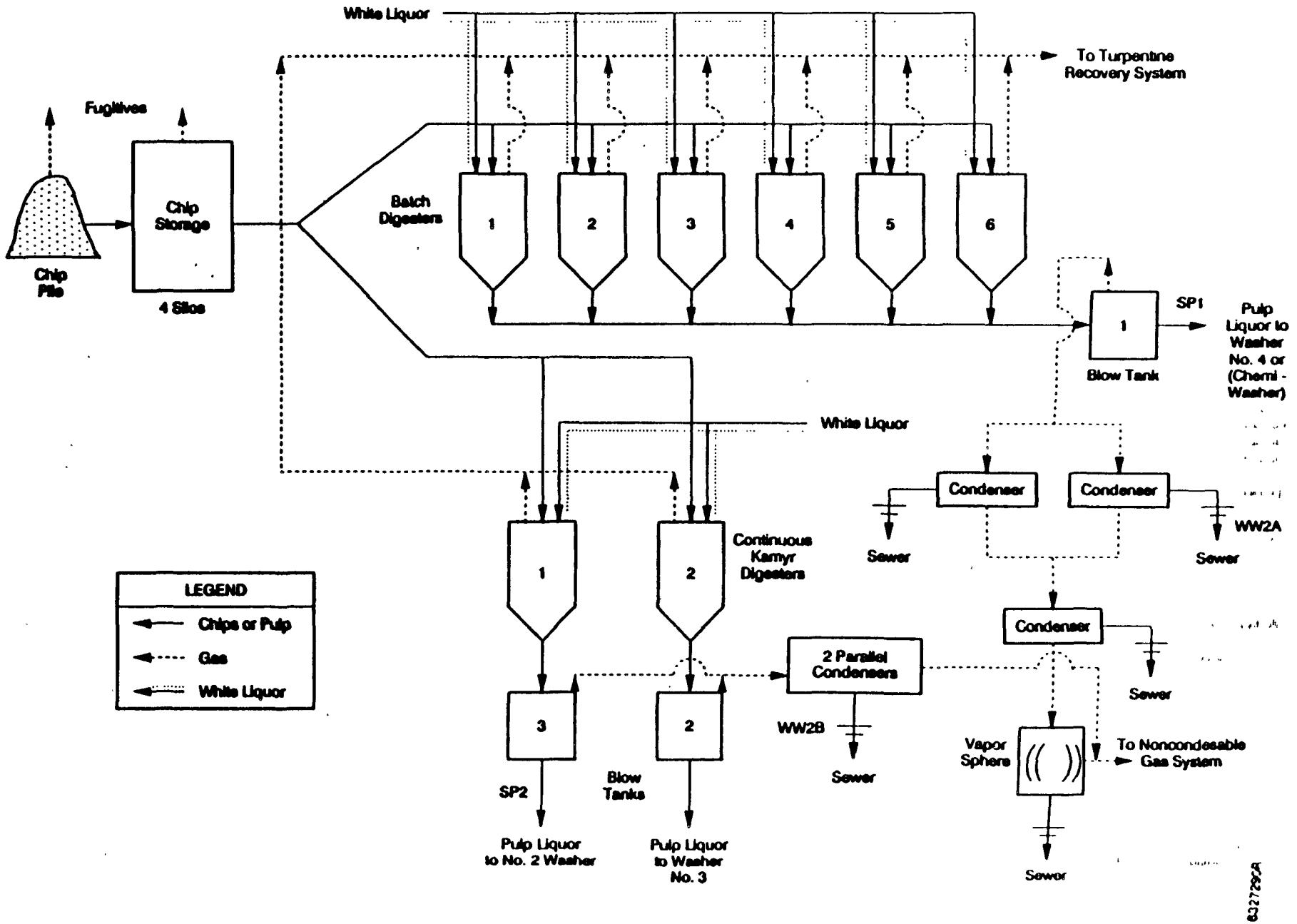

Figure A-13. Wood Preparation and Digestion Processes at Site 3

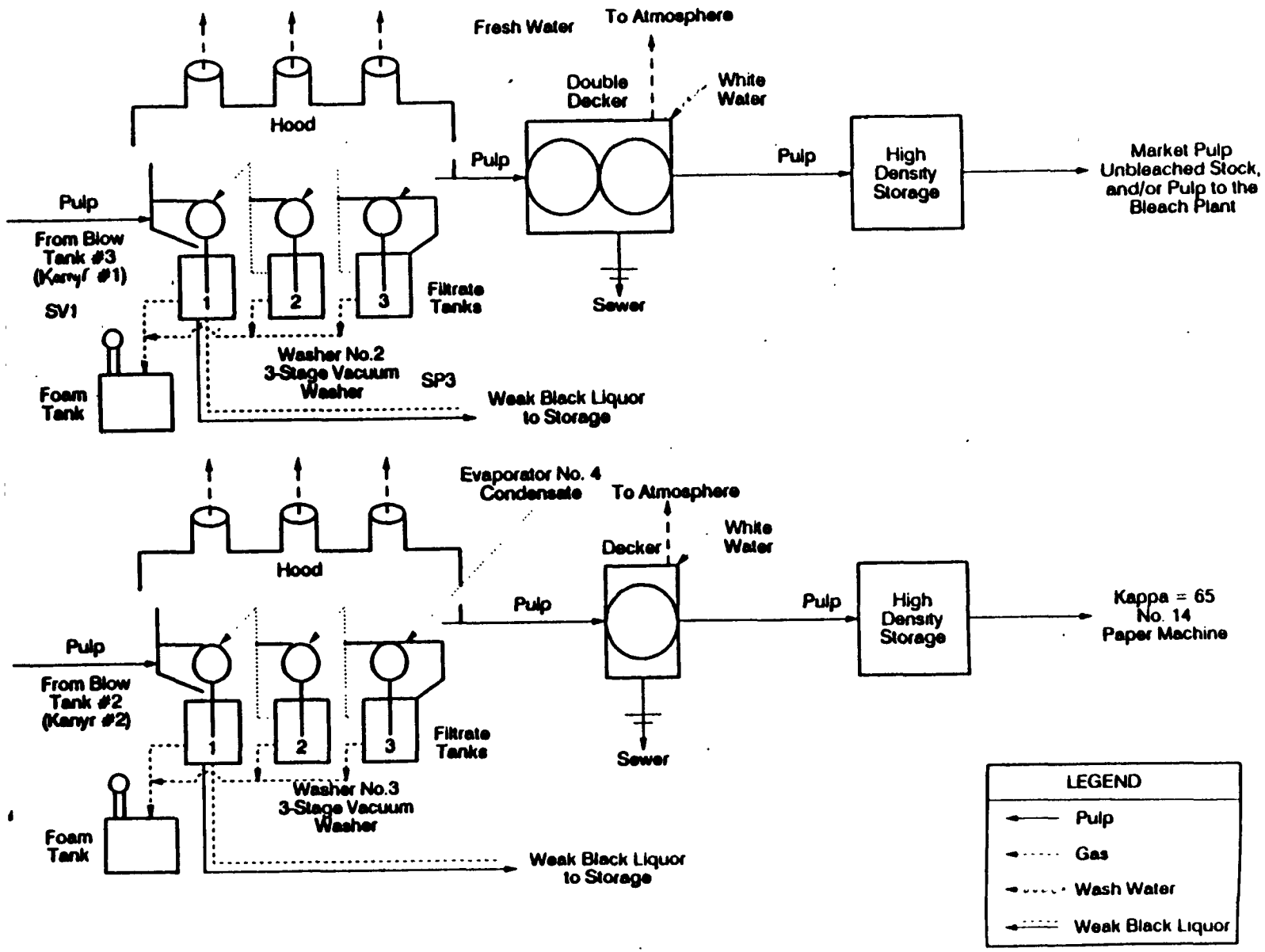

Figure A-14. Pulp Washing at Site 3

water is introduced at the third stage. The filtrate tanks are equipped with a foam tank to decrease the amount of foam in the washer system. Weak black liquor from stage one is sent to weak black liquor storage for later chemical recovery. Washed pulp is thickened in a double decker before being sent to the high density storage area. Pulp and liquor from Kamyr No. 2 is sent through a washing system identical to the pulp from the batch digesters (Washer No. 3). However, instead of applying fresh water, evaporator condensate is used as wash water for Stage 3. Washed pulp is then thickened in a decker and stored. The brownstock pulp is then used to make unbleached products.

Pulp and liquor from the batch digesters and Kamyr No. 1 is washed in the No. 4 washer. As shown in Figure A-15, the No. 4 washer is a seven stage counter current flow system, with fresh water being applied at stage seven. This washer system is called a chemiwasher. Weak black liquor from the first stage filtrate tank is sent to weak black liquor storage. Pulp from the chemiwasher is sent to storage where it may be sold as unbleached market pulp or sent to the bleach plant.

Figure A-16 presents a flow diagram of chemical recovery at Site 3. Weak black liquor from all wash stages is filtered, stored, and sent through weak black liquor oxidation where some sodium sulfide (Na_2S) may be converted to sodium thiosulfate ($Na_2S_2O_3$). From the oxidation system, the black liquor is sent to the evaporators for removal of water. In the newer part of the plant, strong black liquor from the No. 1 and No. 2 evaporators (55 percent solids) is stored and then sent through another oxidation system. From black liquor oxidation, the strong black liquor is sent to the No. 3 direct contact evaporator (DCE) furnace to convert the sulfur compounds to sulfide and to drive off the remaining water. Strong black liquor form the No. 4 evaporator set (50 percent solids) is concentrated to 63 percent solids, stored, and sent to the No. 4 indirect contact recovery furnaces.

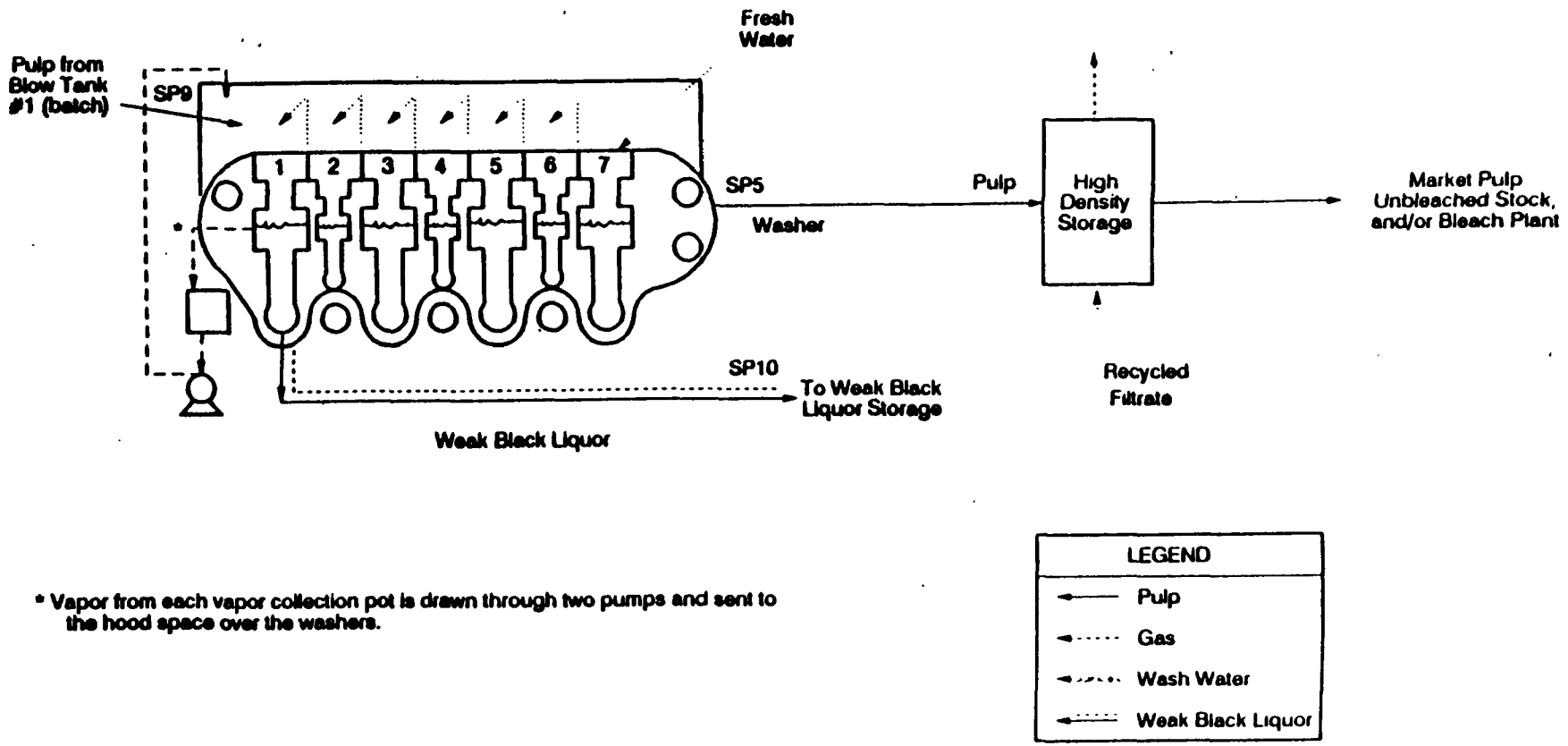

Figure A-15. No. 4 Washer at Site 3

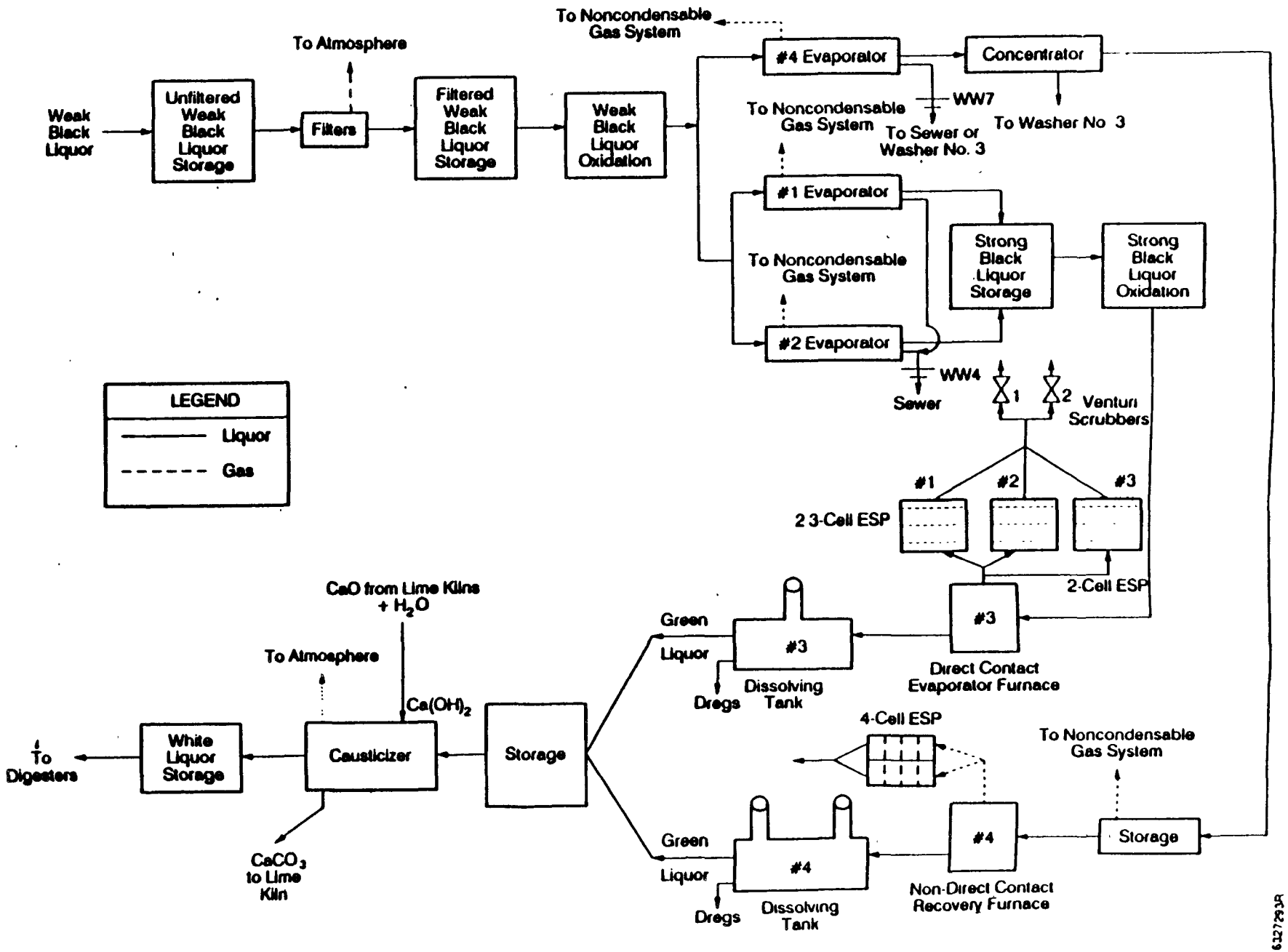

Figure A-16. Chemical Recovery at Site 3

Smelt produced from combustion in the recovery furnaces is sent through dissolving tanks where water is added to dissolve the sodium salts. This solution, called green liquor, is the treated with calcium hydroxide ($Ca(OH)_2$) to form sodium hydroxide (NaOH). The $Ca(OH)_2$ is derived from combustion of the calcium carbonate ($CaCO_3$) precipitated from the causticizer in a lime kiln to form lime (CaO), followed by the addition of water.

In addition to the recovery of cooking chemicals, the facility recovers turpentine from the digester vent gases. The turpentine recovery system is presented in Figure A-17. The digester vent gases are routed to a condenser. The noncondensibles along with overhead from the vapor sphere and the evaporators are routed to the lime kilns. Sulfamic turpentine is decanted from the condensates. The remaining condensates are sewered.

Figure A-18 presents a diagram of the bleaching process at Site 3. Brownstock pulp stored after being washed from Washer No. 4 is pumped to the bleach plant where it is bleached in the following sequence:

- Chlorine (Cl_2) with approximately 85 percent chlorine dioxide (ClO_2) substitution;
- Extraction with oxygen and peroxide; and
- Chlorine dioxide.

Before the Cl_2/ClO_2 tower, a small amount of ClO_2 is mixed with brownstock pulp followed by further mixing with Cl_2, and more ClO_2 yielding 75 to 100 percent ClO_2 substitution. From the Cl_2/ClO_2 tower, the pulp is washed and sent to the extraction tower where oxygen and peroxide are added to dissolve the residual lignin. The pulp is then washed and sent to the ClO_2 tower for additional bleaching. After a final wash stage, the bleached pulp is stored until needed for papermaking. The Cl_2/ClO_2 tower, all filtrate tanks, and all bleach wash stages are vented to a caustic scrubber. The extraction stage tower is vented to the atmosphere.

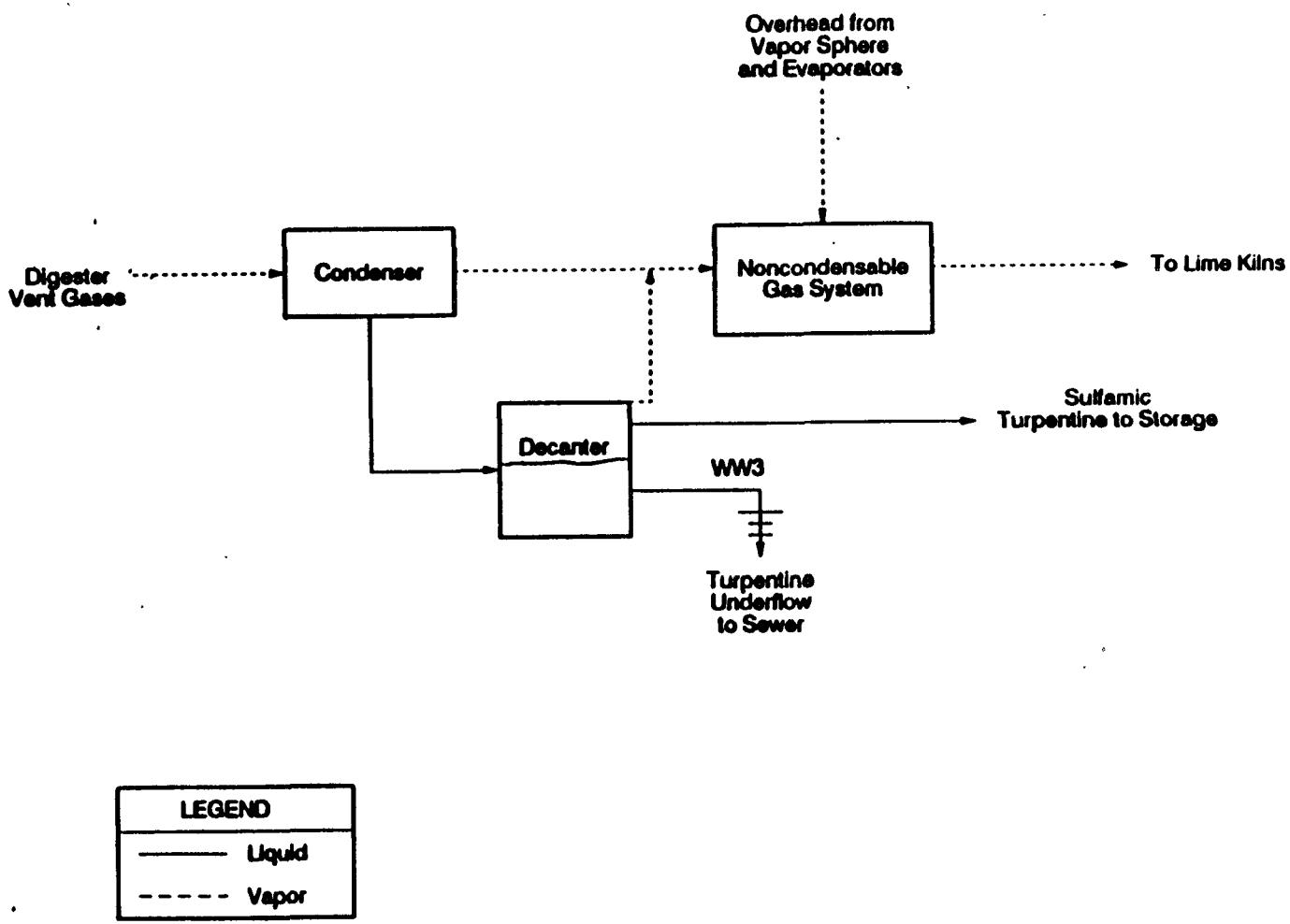

Figure A-17. Turpentine Recovery at Site 3

6327294R

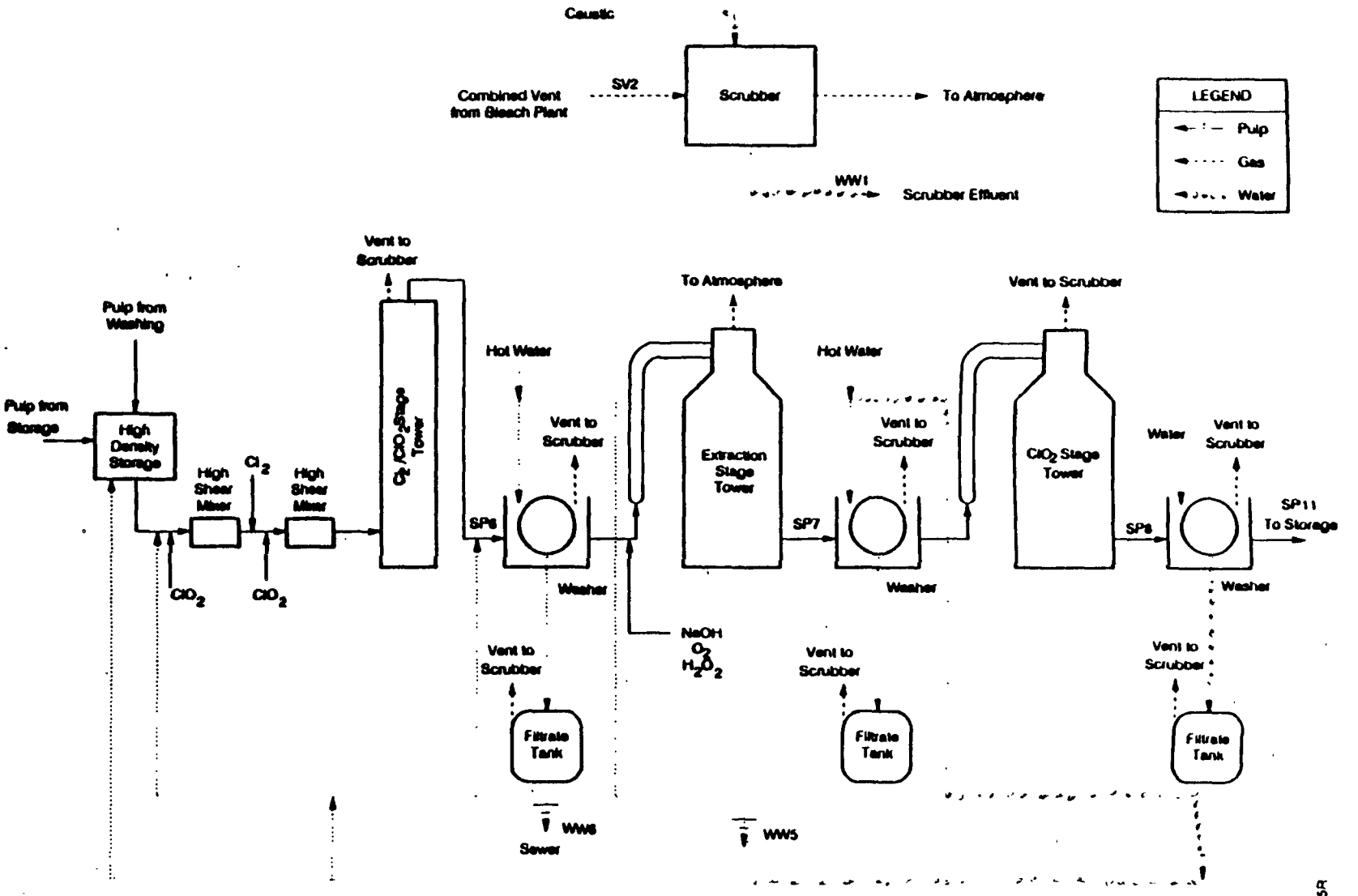

Figure A-18. Bleaching Process at Site 3

The objectives of the Site 3 sampling program was to characterize the compounds present in kraft softwood digested pulp, weak black liquor, batch and continuous blow tank condensates, turpentine underflow, evaporator condensates, acid sewer, caustic sewer, and bleach plant scrubber effluent. Other objectives included characterizing the compounds present in and quantification of air emissions from kraft softwood bleaching with 85 to 95 percent chlorine dioxide substitution, comparison of chemi-washing with conventional rotary vacuum washing and quantification of air emissions from a brownstock washer foam tank. To achieve the objectives of the program, sampling points at Site 3 were selected at locations in the pulping, chemical recovery, and bleaching process areas of the mill. Gas samples were collected at two locations, the vent from washer no. 2 foam tank and the vent into the bleach plant scrubber. Gas sampling locations and associated identifiers are shown in Table A-9. The results of the sampling at these locations is given in Table A-10.

Process liquid samples were taken at 18 locations in the plant. These are also shown in Table A-9 along with the identifier for each sampling location. Results from the analyses of the process stream samples are summarized in Table A-11. Additional details of the testing at site 3 are available from the detailed test reports for the site.[5,6]

A.2.4 Site 4. Site 4 is a bleached kraft pulp and paper mill. The mill pulps and bleaches hardwood and softwood separately to produce a total of approximately 1850 tons per day (TPD). A pulp machine that runs either 100% hardwood or 100% softwood, produces approximately 300 TPD of Food and Drug Administration (FDA)-approved market pulp. Two paper machines, using varying blends of hardwood and softwood, produce approximately 1550 TPD of paper. Products include envelope paper, photocopy paper, computer bond paper, and offset paper for

Table A-9. Gas and Liquid Sampling Locations for Site 3

Location	Identifier
Gas sampling locations	
Washer no. 2 foam tank vent	V1
Vent into bleach plant scrubber*	V2
Liquid process stream sampling locations	
Pulp out of blow tank no. 1	SP1
Pulp out of blow tank no. 3	SP2
Weak black liquor form washer no. 2	SP3
Pulp into chemiwasher no. 4	SP9
Weak black liquor from chemiwasher no. 4	SP10
Pulp into Cl_2/CIO_2 tower	SP5
Pulp out of CL_2/CIO_2 tower	SP6
Pulp out of extraction tower	SP7
Pulp out of CIO_2 tower	SP8
Pulp out of D washer	SP11
Bleach plant scrubber effluent	WW1
Blow tank condensates from batch digesters	WW2A
Blow tank condensates from kamyr digester	WW2B
Turpentine underflow	WW3
No. 1 and 2 evaporator condensates	WW4
Caustic sewer	WW5
Acid sewer	WW6
No. 4 evaporator/concentrator condensates	WW7

* Refer to Figure A-18 for details on the processes vented into the scrubber.

Table A-10. Measured Vent Emission Rates at Site 3
(lb/hr)

Constituent	Measurement Points	
	V1	V2
Acetaldehyde[a]	0.098	0.001
Acetone[a]	0.316	0.001
Acetone[b]	0.043	0.004
Acrolein[a]	--	0.005
Chlorine[c]	NA	0.041
Chlorine[d]	NA	1.112
Chlorine dioxide[d]	NA	6.648
Chloroform[d]	NA	0.235
Chloroform[b]	--	0.045
Formaldehyde[a]	0.003	0.002
Hydrogen chloride[c]	NA	0.011
Methanol[a]	4.839	2.265
Methyl ethyl ketone[a]	0.194	0.009
Methyl ethyl ketone[b]	0.019	0.000
Methylene chloride[d]	--	0.042
Methylene chloride[b]	--	0.001
Propionaldehyde[a]	0.012	0.001
Carbon tetrachloride[b]	--	0.002
n-Hexane[b]	--	0.001
Chloromethane[b]	--	0.049
2-Butanone[b]	0.019	0.000
Toluene[b]	--	0.001
Bromodichloromethane[f]	--	0.004
Dibromochloromethane[f]	--	0.001
Dimethyl sulfide	0.920	--
Dimethyl disulfide	0.249	--
a-Pinene	1.376	0.396
b-Pinene	0.508	0.135
p-Cymene	0.058	0.009
p-Cymene	0.256	0.001
a-Pinene	6.471	0.000
b-Pinene	0.970	0.000
a-Terpinol	0.110	--
Total Hydrocarbons[e]	27.306	1.437

[a] - Obtained using Method 0011.
[b] - Obtained using Volatile Organic Sampling Train.
[c] - Obtained using Method 26A.
[d] - Obtained using NCASI.
[e] - Obtained using 8240 analyses.
[f] - Obtained using Semivolatile Organic Sampling Train.
-- Not analyzed
NA - Not applicable

Table A-11. Measured Constituent Concentrations at Site 3 (ug/mL)

	Measurement Points																	
Compound	SP1	SP2	SP3	SP5	SP6	SP7	SP8	SP9	SP10	SP11	WW1	WW2a	WW2b	WW3	WW4	WW5	WW6	WW7
Formaldehyde (a)	25	8.1	2.813	23.667	15.227	1.023	0.61	5.1	6.6	20	0.64	0.87	0.82	0.67	0.66	0.94	1.1	1.4
Acetaldehyde (a)	0.29	0.47	0.25	0.197	0.077	0.647	0.15	0.09	0.2	0.9	0.02	1	16	31	0.91	0.4	0.1	2.6
Acetone (a)	25	39	26.767	2.033	0.95	1.94	0.39	31	26	2.2	0.02	3.9	26	23	2.2	1.6	1.2	3.4
Acrolein (a)	<0.03	<0.03	<0.03	<0.03	<0.03	<0.03	<0.03	<0.03	<0.03	<0.03	<0.03	<0.03	<0.03	<0.03	0.05	0.04	<0.03	<0.03
Propionaldehyde (a)	1.6	<0.03	0.077	1.567	0.66	0.127	0.07	0.57	0.44	1.4	<0.03	0.24	3.5	2.2	0.21	0.1	0.12	0.27
Methyl ethyl ketone (a	1.4	0.15	0.267	1.467	0.507	0.19	0.06	<0.03	<0.03	1.6	0.01	1.6	23	7.6	1.11	0.1	0.14	1.8
a-Pinene (a)	ND	<1.0	1.133	ND	--	--	--	ND	1.2	--	--	ND	118	2.1	ND	--	--	ND
b-Pinene (a)	ND	3.15	1.04	ND	--	--	--	1.4	1.9	--	--	ND	20	ND	ND	--	--	ND
Methylene chloride (a)	--	--	--	--	7.233	7.133	6.9	--	--	7.7	<0.50	--	--	--	--	<0.50	<0.50	--
Chloroform (a)	--	--	--	--	<0.50	<0.50	<0.50	--	--	<0.50	ND	--	--	--	--	<0.50	<0.50	--
Methanol (a)	60	388	392	19	204	177	83	292	323	22	95	83	3,731	2,448	211	300	233	155
Bromoform (b)	0.001	ND			ND	ND												
Carbon disulfide (b)	0.044	0.014			0.005	0.021												
Chloroform (b)	0.001	ND			0.157	0.121												
Cumene (b)	ND	ND			ND	0												
Ethylbenzene (b)	0	ND			ND	ND												
Dibromomethane (b)	0.001	ND			ND	ND												
n-Hexane (b)	0.001	0.009			0	0.001												
Chloromethane (b)	ND	ND			0.011	ND												
1,1,1-Trichloroethane (b)	0.017	ND			ND	ND												
2-Butanone (b)	0.081	0.35			0.028	0.047												
Iodomethane (b)	0.002	ND			ND	ND												
4-Methyl-2-pentanone (b)	0.005	ND			ND	ND												
Methylene chloride (b)	0.024	0.044			0.007	0.01												
Styrene (b)	0.001	ND			0	ND												
1,1,2,2-Tetrachloroethane (b)	0.003	ND			ND	ND												
Toluene (b)	0.019	0.045			0	0.001												
1,1,2-Trichloromethane (b)	0.001	ND			ND	ND												
Isocotane 9b)	0	ND			ND	0.001												
Vinyl acetate (b)	0.001	ND			ND	ND												
m-/p-Xylene (b)	0.001	ND			ND	ND												
Acetone (b)	0.123	0.34			0.064	0.25												
Bromodichloromethane (b)	ND	ND			0.001	ND												
1,3-Dichlorobenzene (b)	0.001	ND			ND	ND												
1,2-Dichlorobenznen (b)	0.002	ND			ND	ND												
1,4-Dichloro-2-butene (b)	0.003	ND			ND	ND												
Ethyl methacrylate (b)	0.002	ND			ND	ND												
2-Hexanone (b)	0.003	ND			ND	ND												
Trichlorofluoromethane (b)	0.002	ND			ND	ND												
1,2,3-Trichloropropane (b)	0.003	ND			ND	ND												
Dimethyl sulfide (b)	0.011	1.5			ND	ND												
Dimethyl disulfide (b)	0.4	2.8			ND	ND												
a-Pinene (b)	0.137	1.6			ND	ND												
b-Pinene (b)	0.017	0.22			ND	ND												
p-Cymene (b)	0.004	0.043			ND	ND												
Phenol (c)	2.993	3.35			ND	ND												
a-Pinene (c)	ND	0.08			ND	ND												
a-Terpinol (c)	0.557	2.05			ND	ND												

-- Not sampled
ND - Not detected
a - Obtained using whole waste analyses (HPLC/GC)
b - Obtained using method 8240
c - Obtained using 8270

printing and writing. An overview of processes at Site 4 are presented in Figure A-19.

Sampling points for Site 4 are located in the pulping, chemical recovery, and bleaching process areas of the mill. Site 4 processes hardwood and softwood chips in two separate, but similar, lines. Figure A-20 presents the wood preparation pulping processes at the mill. Logs are debarked and chipped and stored in chip piles. The chips are cooked with white liquor in continuous Kamyr digesters to form pulp. Noncondensible gases (NCG) and pulp/liquor from the digesters are separated in a blow tank and the pulp is screened to remove undigested fiber. Black liquor is washed from the pulp in brownstock washers and sent to chemical recovery where it is converted back to white liquor for reuse in cooking.

The digester and blow tank off-gases are collected and sent to a condenser. The NCG's from the condenser are incinerated and the condensates are steam stripped. In the softwood line, turpentine is recovered as a fraction from the condenser receiving NCG from the digester, chip bin, and blow tank.

Figures A-21 and A-22 present flow diagrams of hardwood and softwood brownstock washing and oxygen delignification processes. Hardwood pulp from screening enters a two stage countercurrent brownstock washing system and then is routed to the oxygen delignification tower. Oxidized white liquor or caustic is added to the discharge of the second stage washer. A large portion of the weak black liquor from brownstock washing is used as wash water in the sections of diffusion washing in the Kamyr digester and the remaining weak black liquor is sent directly to chemical recovery.

At the oxygen delignification tower more lignin is removed from the pulp. Pulp from the oxygen tower is washed in a two-stage countercurrent rotary vacuum washer system. Evaporator condensates from chemical recovery are used as wash water for the second stage. A fraction of the filtrate from the first stage

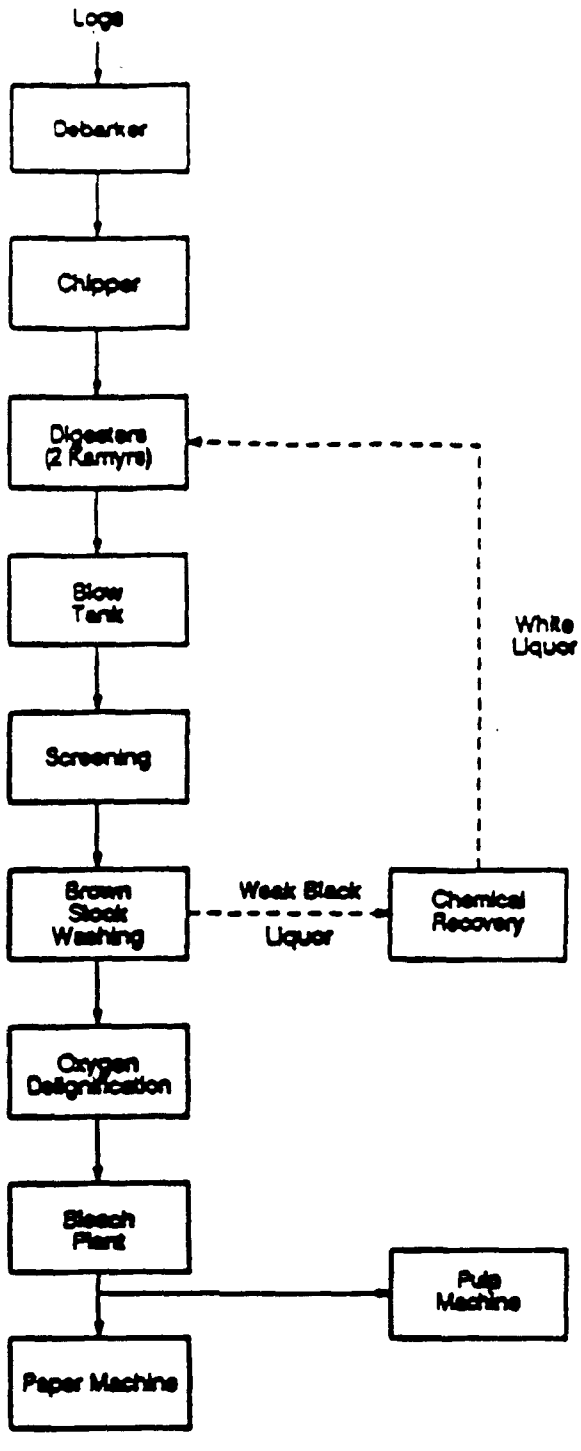

Figure A-19. General Process Diagram for Site 4

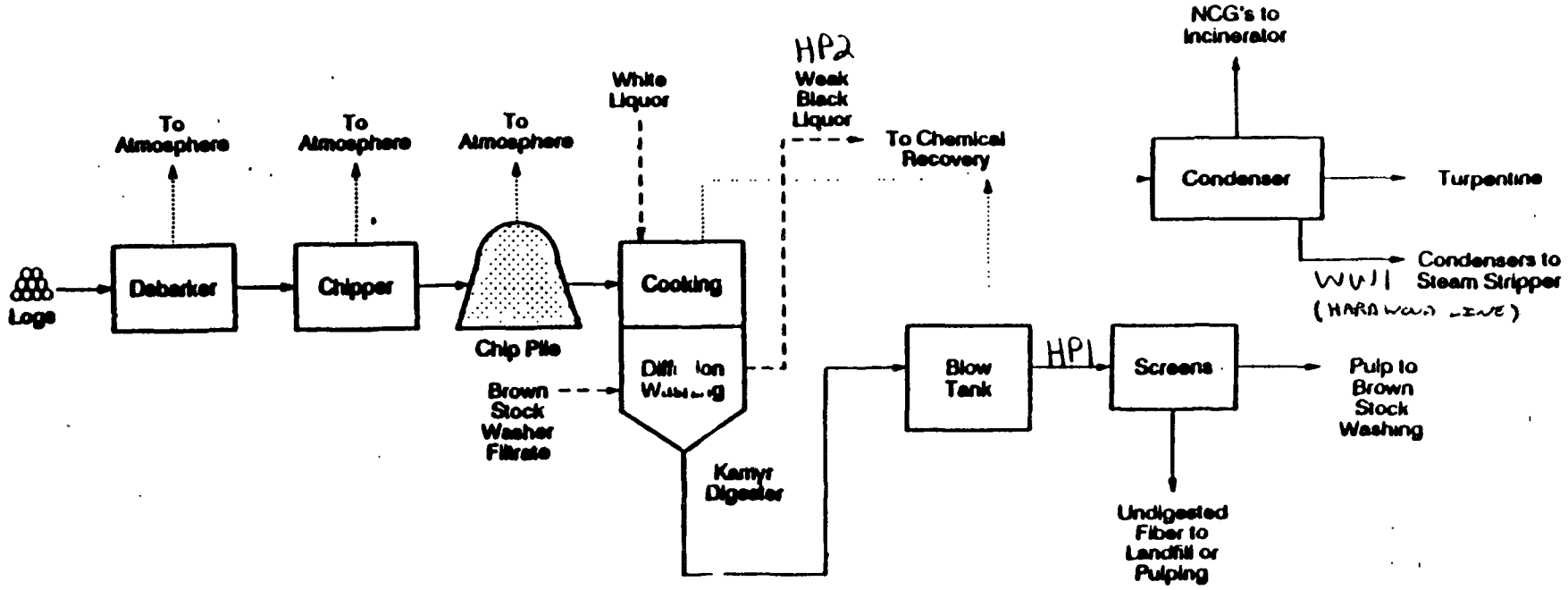

Figure A-20. Wood Preparation and Pulping at Site 4

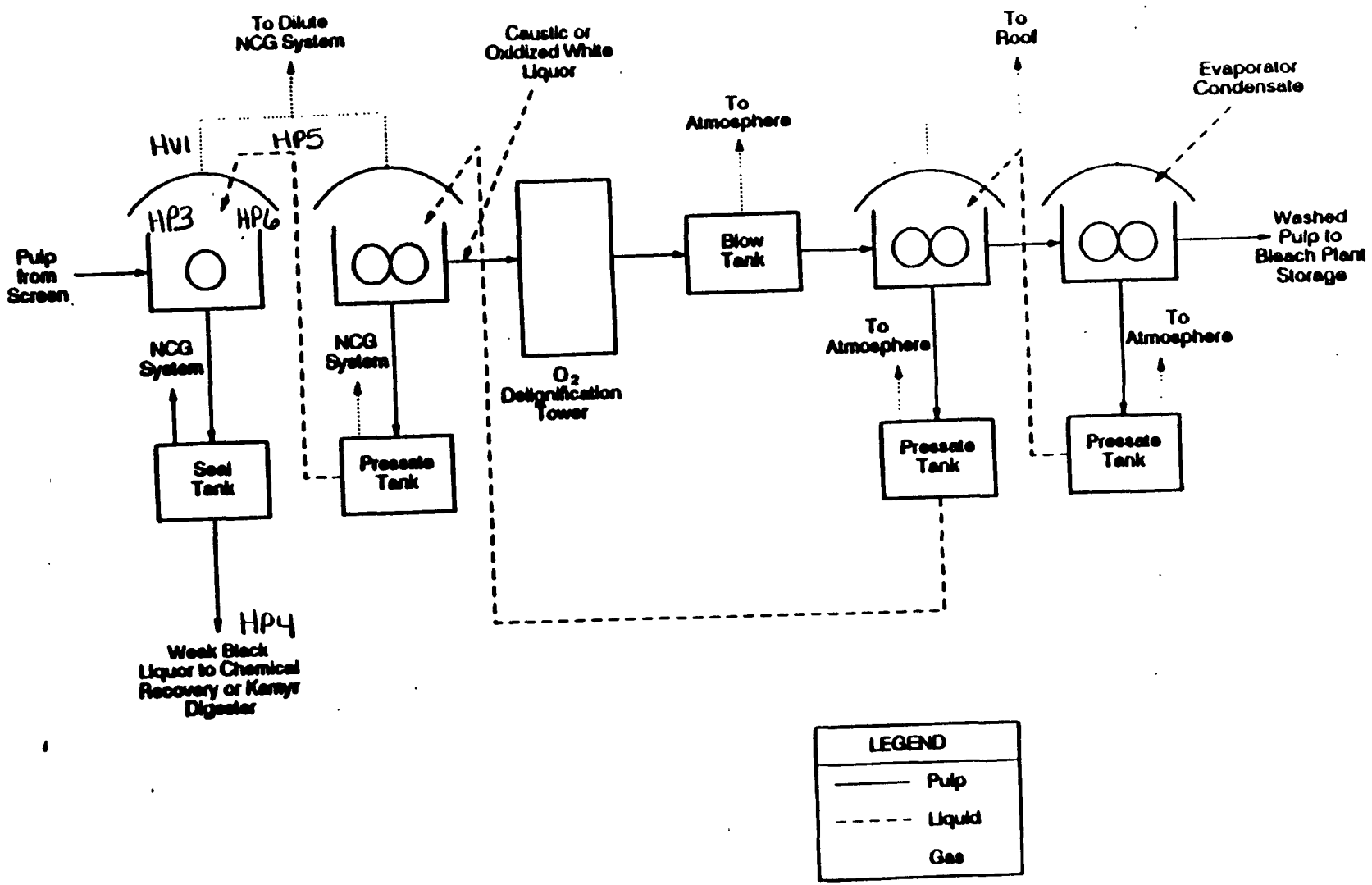

Figure A-21. Hardwood Washing and Oxygen Delignification at Site 4

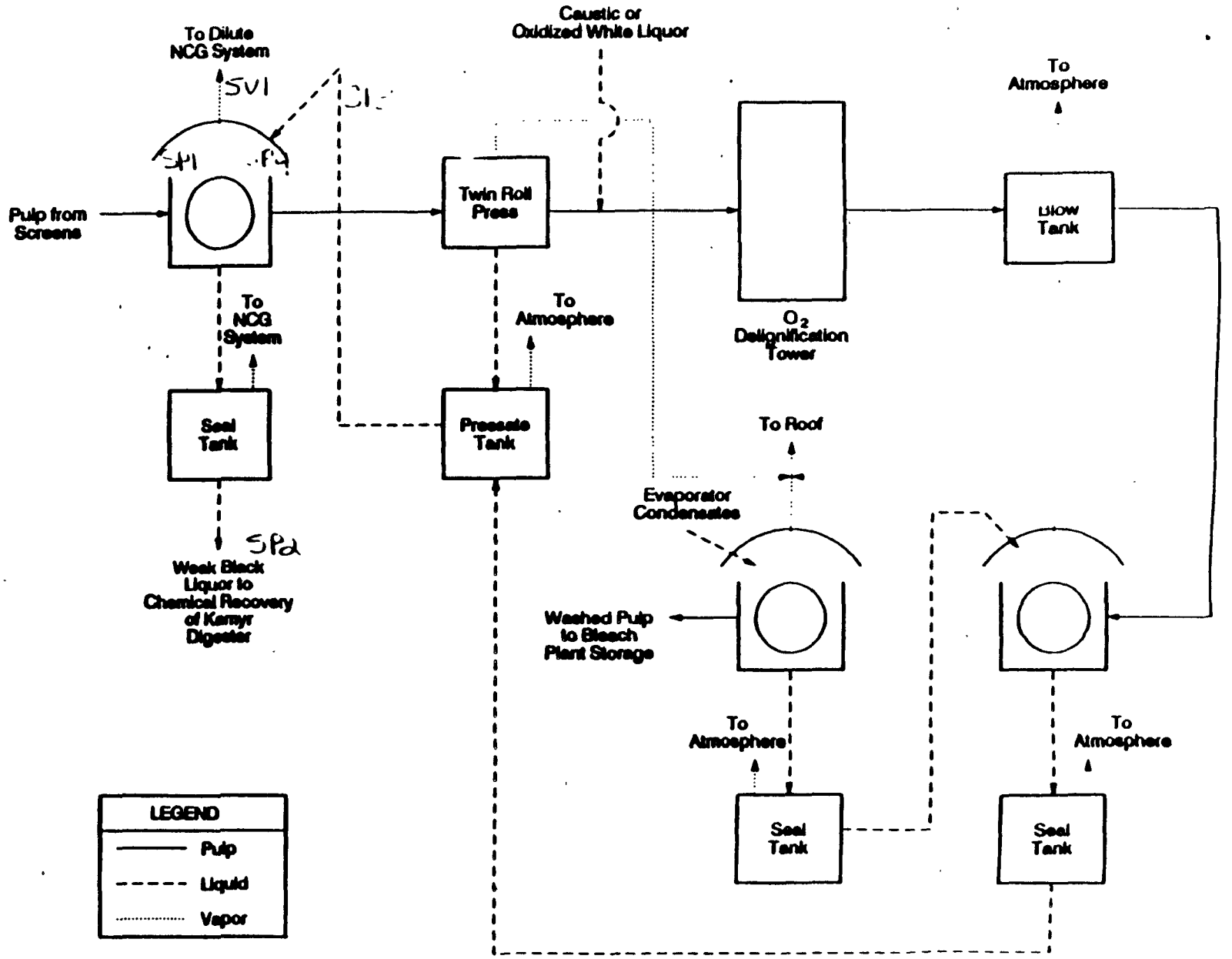

Figure A-22. Softwood Washing and Oxygen Delignification at Site 4

oxygen washer and filtrate from the presses are used as wash water on the brownstock washer.

The softwood line is similar to the hardwood line. The only differences are that the hardwood line contains two stages of brownstock washing while the softwood line uses one stage and a press. In addition, pressate from the oxygen washers is recycled as wash water on the second stage washer in the hardwood line, while it is routed to the twin roll pressate tank on the softwood line.

Weak black liquor from diffusion washing and brownstock washing is sent to chemical recovery. Figure A-23 presents the chemical recovery process at Site 4. The weak black liquor enters a multi-effect evaporator where the weak black liquor is concentrated. The hardwood line has a 6-effect evaporator, while the softwood line has a 5-effect evaporator. NCG's from the evaporators are sent to a condenser. NCG's from the condenser are normally burned in an incinerator. Clean evaporator condensates are used for pulp washing. Foul condensates are steam stripped and the stripper effluent is then used for pulp washing. Other pulp mill foul condensates are also stripped in this steam stripper.

Strong black liquor from the evaporator is burned in a recovery furnace. Smelt form the recovery furnace is dissolved in water to form green liquor and the dregs (impurities) are removed by a clarifier. The clarified green liquor is mixed with lime in a slaker. The slurry formed in the slaker is agitated in a causticizing tank to form lime mud. White liquor is removed from the lime mud in a pressure filter and is reused in the digester. The lime mud is washed and burned in the lime kiln. Quick lime produced in the lime kiln is reused in the slaker process. Gases from the lime kiln are scrubbed (No. 1 line) or controlled with an electrostatic precipitator (No. 2 line).

The bleaching sequence for the softwood line is C/D-Eo-D (chlorine/chlorine dioxide, caustic extraction with oxygen and chlorine dioxide). Figure A-24 presents the flow through the

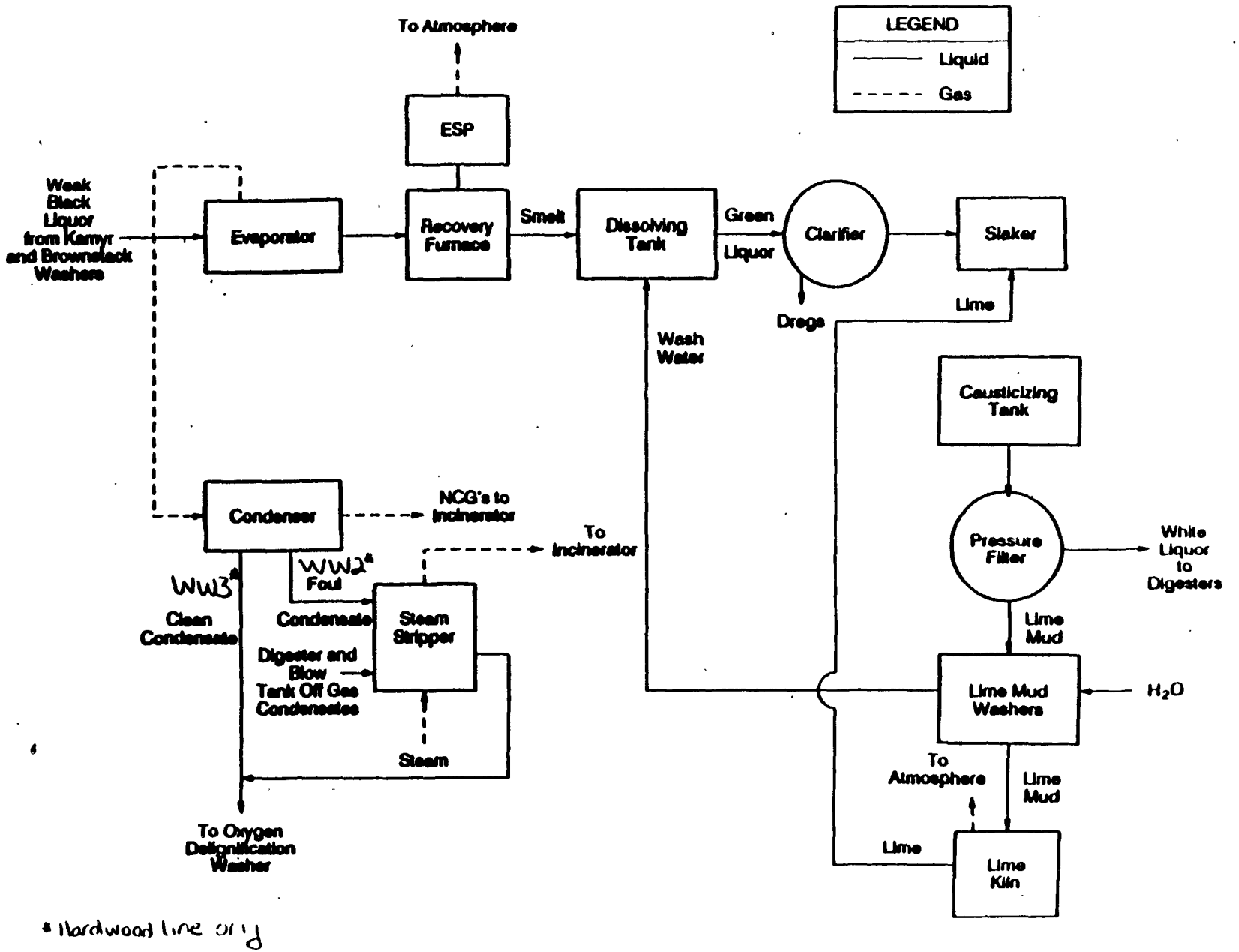

* Hardwood line only

Figure A-23. Chemical Recovery at Site 4

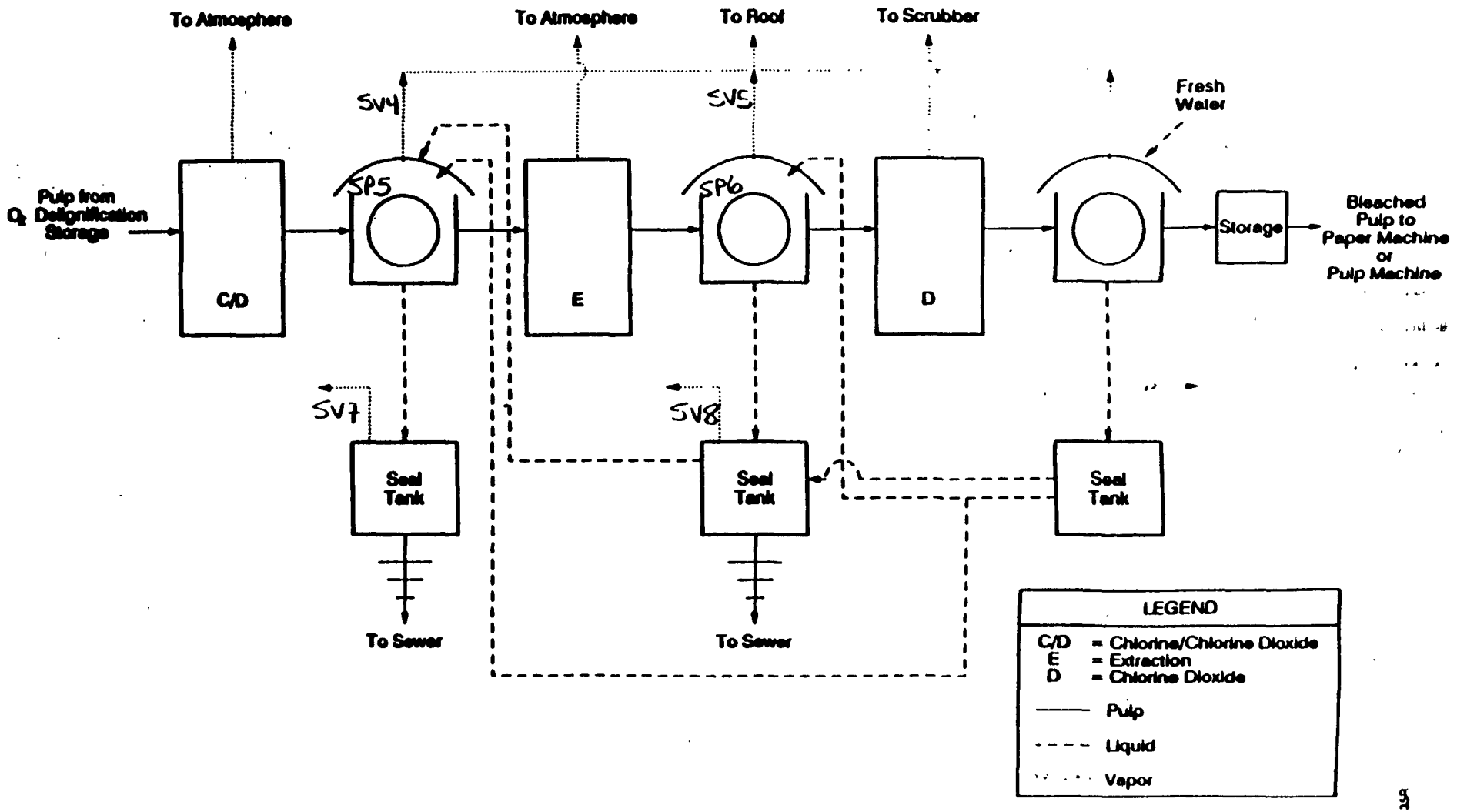

Figure A-24. Softwood Bleaching Process at Site 4

softwood bleach plant. Pulp from the second oxygen delignification washer first enters the C/D tower and is followed by a washer. The washed pulp and some oxygen enters a caustic extraction tower followed by a washer and then enters a chlorine dioxide tower, followed by a washer. Pulp from the D washer is sent to a pulp machine or papermaking. The chlorine dioxide tower vents to a scrubber using water as the scrubbing medium.

Fresh water is used on the D washer. Filtrate from this washer is used as wash water for both the caustic washer and the C/D washer. Filtrate from the caustic washer is sewered and used as wash water for the C/D washer. Filtrate from the C/D washer is sewered.

The bleaching process for the hardwood line is similar to that for the softwood line and is presented in Figure A-25. The bleaching sequence is identical except that the caustic extraction stage for the hardwood line does not use oxygen, the hardwood D-stage washer sometimes uses pulp machine white water as wash water, and the hardwood line bleach plant scrubber treats the vent streams from all three sets of washers and seal tanks and the chlorine dioxide tower. White liquor is used as the scrubbing medium.

This test site was selected because it was considered to be representative of the kraft pulp and paper industry and because the mill uses technologies that might represent MACT for the industry. Specific objectives of the test program at this site were to characterize kraft hardwood and softwood digested pulp and weak black liquor, kraft hardwood and softwood bleaching with chlorine dioxide substitution, screens/deknotters, and kraft hardwood digester off-gas condensates, evaporator condensates, acid sewer, caustic sewer, and bleach plant scrubber effluent. Other objectives included quantification of air emissions from kraft hardwood and softwood brownstock washers, and kraft hardwood and softwood bleaching with chlorine dioxide substitution. Both process liquid and gaseous samples were taken in the pulping and bleaching areas.

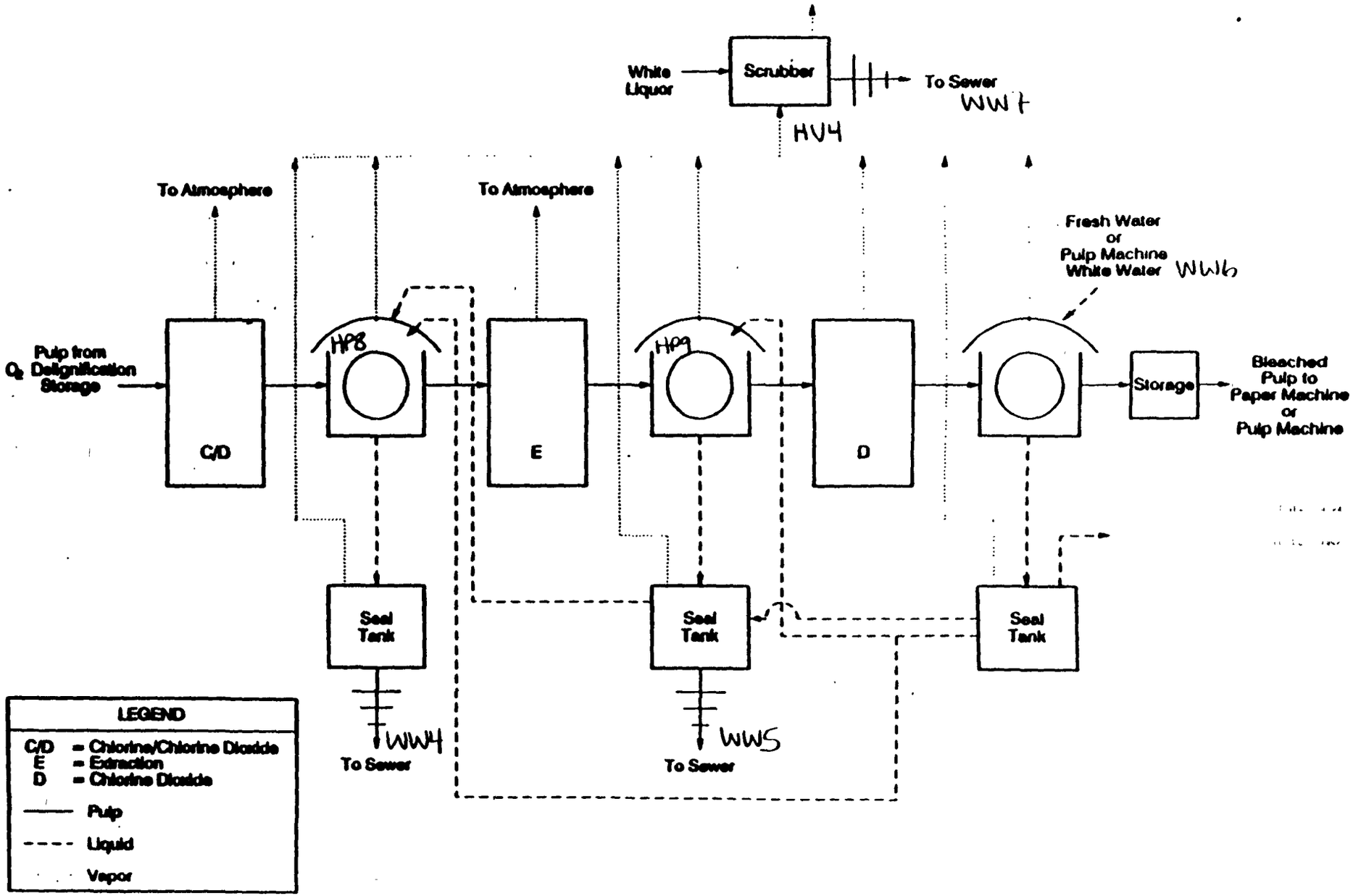

Figure A-25. Hardwood Bleaching Process at Site 4

Gas samples were taken at 6 locations in the plant. These locations and their identifiers are listed in Table A-12. Results of the gas sampling are summarized in Table A-13.

Liquid process stream samples were collected at 8 locations in the Hardwood processing area, at 6 locations in the softwood processing area, and at 6 locations in the wastewater collection and treatment area. Liquid sampling locations are summarized below in Table A-14. A summary of the results of the liquid process stream sampling is given in Table A-15. Additional details of the field test program at this site can be found in the detailed test reports for the site.[7,8]

A.2.5 Site 5. Site 5 is an integrated bleached, magnesium-based sulfite mill. The mill produces bleached market dissolving sulfite grade pulp and papergrade sulfite pulp. Both pulp grades are made from 100 percent hardwood and/or softwood chips. Dissolving sulfite pulp comprises 88 percent of the mill production with papergrade sulfite pulp making up the remaining 12 percent. Pulps produced in the mill are used in photographic paper, plastic molding compounds, diapers, and plastic laminates. Average pulp production is approximately 410 metric tons per day, or 145,000 metric tons per year. An overview of the process at Site 5 is presented in Figure A-26.

Sampling points for Site 5 are located in the pulping, chemical recovery, and bleaching process areas of the mill. Figure A-27 presents a process flow diagram for wood preparation and digestion operations at Site 5. Nine batch digesters are operated in parallel and empty to one of four dump tanks. The off-gases from the dump tanks are routed to a water scrubber, called the nuisance scrubber, where sulfur dioxide (SO_2) released from the dump tank off-gas is scrubbed.

Following the dump tanks, the cooked pulp enters a washing system. A flow diagram of the five stage washing process was claimed by the mill to be confidential business information.[9] The pulp is washed in a three stage countercurrent washer and

Table A-12. Gas Sampling Locations at Site 4

Location	Identifier
Hardwood Plant	
Brownstock washer vent	HV1
Vent into bleach plant scrubber*	HV4
Softwood Plant	
Brownstock washer vent	SV1
C/D washer vent	SV4
E washer vent	SV5
E seal tank vent	SV8

* Refer to Figure A-25 for details on the processes vented into the scrubber.

Table A-13. Gas Sampling Results at Site 4
(lb/hr)

Compound	Measurement Points					
	HV1	HV4	SV1	SV4	SV5	SV8
Acetaldehyde[a]	0.038	0.108	0.060	0.001	0.005	NA
Acetone[a]	0.172	0.475	0.258	0.004	0.045	NA
Acetone[b]	0.052	0.155	0.026	NA	na	NA
Acrolein[a]	0.001	0.489	0.001	0.001	0.015	NA
Chlorine[c]	NA	18.89	NA	0.019	0.003	NA
Chlorine[d]	NA	59.24	NA	0.035	0.032	NA
Chlorine dioxide[d]	NA	31.44	NA	0.044	0.235	NA
Chloroform[d]	NA	2.238	NA	0.748	0.306	NA
Chloroform[b]	BDL	0.868	BDL	NA	NA	NA
Formaldehyde[a]	0.001	0.046	0.005	0.005	0.003	NA
Hydrogen chloride[c]	NA	0.536	NA	0.009	0.002	NA
Methanol[a]	6.234	2.746	3.823	0.922	1.359	NA
Methyl ethyl ketone[a]	0.079	0.234	0.102	0.003	0.014	NA
Methyl ethyl ketone[b]	0.094	BDL	0.008	NA	NA	NA
Methylene chloride[d]	NA	0.110	NA	0.008	0.006	NA
Methylene chloride[b]	0.004	BDL	BDL	NA	NA	NA
Propionaldehyde[a]	0.005	0.031	0.001	0.000	0.000	NA
Benzene[b]			0.004			
Chloromethane[b]		1.729				
2-Butanone[b]	0.094		0.008			
Styrene[b]	0.005					
Toluene[b]	0.007					
Dimethyl sulfide[b]	0.561		0.219			
Dimethyl disulfide[b]	0.214		0.028			
a-Pinene[b]	0.038		.0259			
b-Pinene[b]	0.013		0.156			
p-cymene[b]			0.004			
Acetophenone[f]			0.002			
Hexachlorocyclo -pentadiene[f]		0.002				
Hexachloroethane[f]		0.001				
a-Pinene[f]	0.011		1.122			
b-Pinene[f]	0.005		0.385			
a-Terpineol[f]	0.012		0.169			
Total hydrocarbons[e]	7.136	2.379	11.96	0.654	0.817	2.389

[a] - Obtained using Method 0011
[b] - Obtained using VOST
[c] - Obtained using Method 26A
[d] - Obtained using NCASI
[e] - Obtained using Method 25A
[f] - Obtained using SEMIVOST
NA - Not applicable BDL - Below detection limit

Table A-14. Liquid Sampling Locations at Site 4

Location	Identifier
Hardwood Processing Area	
Pulp out of the blow tank	HP1
Weak black liquor from Kamyr digester	HP2
Pulp into 1st stage brownstock washer	HP3
Weak black liquor from 1st stage brownstock washer	HP4
Pressate from 2nd stage brownstock washer	HP5
Pulp out of 1st stage brownstock washer	HP6
Pulp into C/D washer	HP8
Pulp into E washer	HP9
Wastewater Processes	
Blow tank condensate	WW1
Evaporator condensates to steam stripper	WW2
Evaporator condensates to O_2 delignification washer	WW3
Acid sewer	WW4
Caustic sewer	WW5
Scrubber effluent	WW7
Softwood Processing Area	
Pulp into 1st stage brownstock washer	SP1
Weak black liquor from 1st stage brownstock washer	SP2
Pressate from press	SP3
Pulp out of 1st stage brownstock washer	SP4
Pulp into C/D washer	SP5
Pulp into E washer	SP6

Table A-15. Measured Constituent Concentrations at Site 4 (ug/mL)

	Measurement Points																			
Compound	HP1	HP2	HP3	HP4	HP5	HP6	HP8	HP9	WW1	WW2	WW3	WW4	WW5	WW7	SP1	SP2	SP3	SP4	SP5	SP6
Formaldehyde (a)	3.300	3.033	2.637	0.640	0.656	45.111	1.254	1.508	0.787	1.533	1.607	0.893	2.133	2.067	0.804	0.926	1.606	34.667	2.911	0.878
Acetaldehyde (a)	0.180	0.183	0.273	0.130	0.211	8.542	0.270	0.276	11.500	7.433	0.603	0.143	0.280	0.640	0.311	0.179	0.256	0.642	0.056	0.276
Acetone (a)	4.143	0.387	4.042	1.403	2.488	19.222	1.862	1.998	12.667	17.333	2.700	0.710	1.600	9.417	4.327	4.732	3.156	18.556	0.788	0.762
Acrolein (a)	0.157	1.600	ND	0.944	0.633	0.498	0.101	ND	0.117	ND	0.057	0.067	0.003	0.010	1.464	1.256	ND	ND	0.043	ND
Propionaldehyde (a)	ND	ND	ND	0.002	ND	0.256	0.189	0.026	0.870	0.357	0.060	0.043	0.010	0.633	0.017	ND	ND	0.369	0.021	0.001
Methyl ethyl ketone (a)	0.923	1.100	1.213	9.303	0.771	46.667	1.236	2.356	18.333	16.233	3.700	24.900	3.300	18.673	0.383	0.434	0.351	35.444	1.811	2.300
a-Pinene (a)	ND	ND	ND	ND	ND	ND	--	--	<1.0	4.733	1.700	--	--	--	31.889	26.222	1.022	1.433	--	--
b-Pinene (a)	ND	0.333	ND	0.111	ND	ND	--	--	<1.0	1.767	<1.0	--	--	--	12.333	11.000	0.778	0.367	--	--
Methylene chloride (a)	--	--	--	--	--	--	<1.0	<1.0	<1.0	--	--	<1.0	<1.0	<1.0	--	--	--	--	<1.0	<1.0
Chloroform (a)	--	--	--	--	--	--	1.333	<1.0	--	--	--	1.233	<1.0	<1.0	--	--	--	--	1.572	<1.0
Methanol (a)	980	1,064	735	919	665	224	336	101	ND	5,116	855	277	99	67	706	709	604	215	358	176

-- Not sampled

ND - Not detected

a - Obtained using whole waste analyses (HPLC/GC)

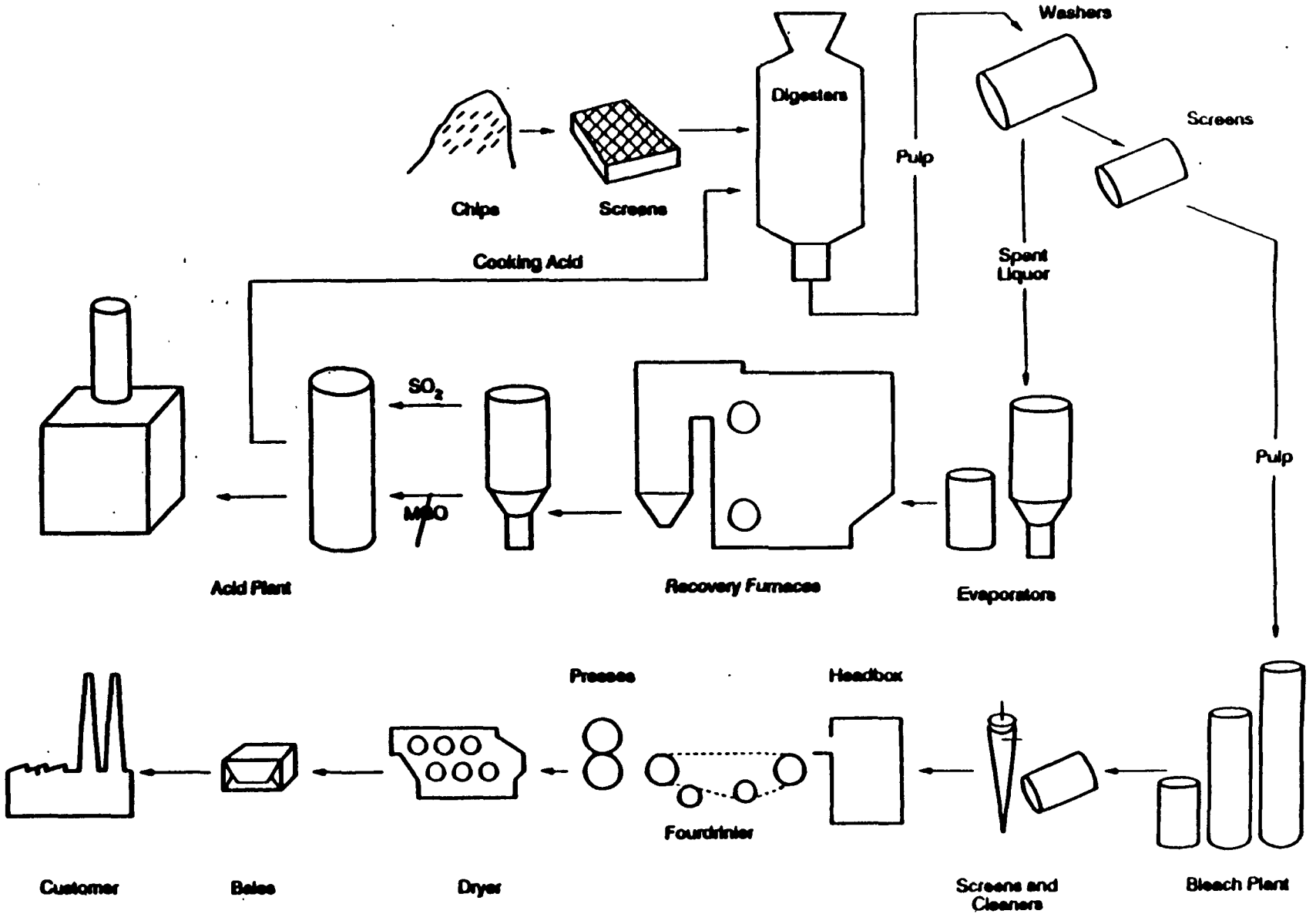

Figure A-26. General Process Diagram at Site 5

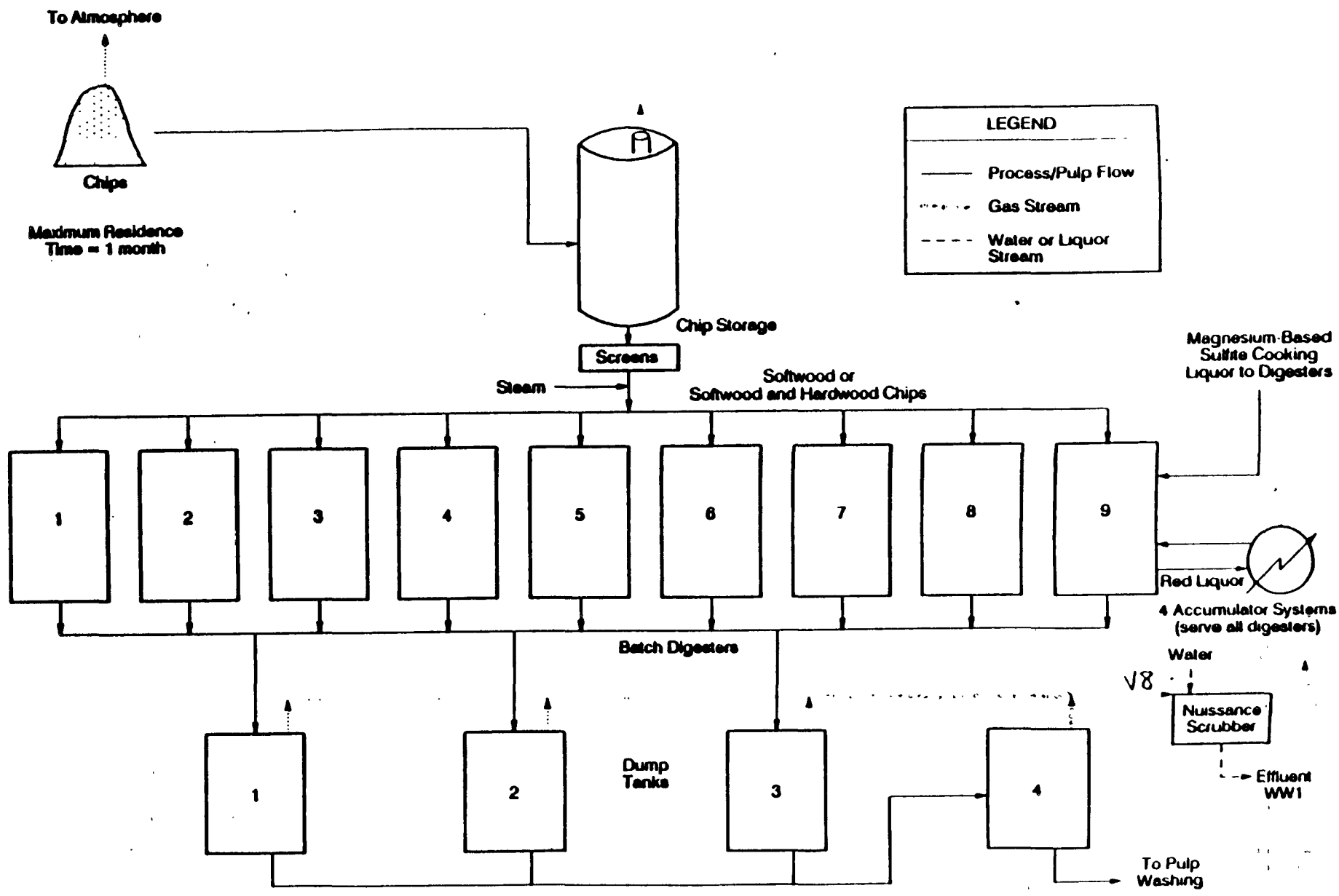

Figure A-27. Wood Preparation and Pulping Process at Site 5

temporarily stored in a soak tank for volume control to the knotters system. Spent cooking liquor (or weak red liquor) from the first stage filtrate tank is sent to the evaporators. The pulp then passes to a knotter followed by a fourth washing stage. The pulp passes through another screening system before being thickened in the decker. The washed pulp is sent to low density storage prior to bleaching.

The weak red liquor from washing is stored and sent to chemical recovery. Figure A-28 presents a flow diagram of the chemical recovery process. The spent liquor is concentrated in the evaporator system. Vapors expelled from the evaporator system pass through a condenser system. Noncondensible gases are sent to the acid plant, while evaporator condensates are sewered. The concentrated red liquor is combusted in a recovery furnace where sulfur dioxide gas (SO_2) is routed to the acid plant. The ash is slaked to recover the magnesium oxide, which is sent to the acid plant. The cooking liquor is produced in the acid plants for use in digestion.

The figure of the bleaching process used at Site 5 was claimed as confidential and can be found in the CBI file (Refer to Reference 9). Brownstock pulp from low density storage is usually bleached in a four stage bleaching sequence: oxygen (O), extraction (E), either peroxide (P) or hypochlorite (H), and chlorine dioxide (D). The peroxide/hypochlorite stage is actually a series of 12 batch cells which can be run independently as needed. Pulp from the bleach plant is sent to papermaking.

Objectives of the field test at Site 5 were to characterize the compounds present in sulfite digested pulp and weak black liquor, sulfite bleaching, and in sulfite evaporator condensates, bleach plant wastewater, and the paper machine white water. Other objectives were to quantify air emissions from sulfite blow gases and sulfite bleaching. Both process liquid and air emission samples were collected in the pulping and bleaching

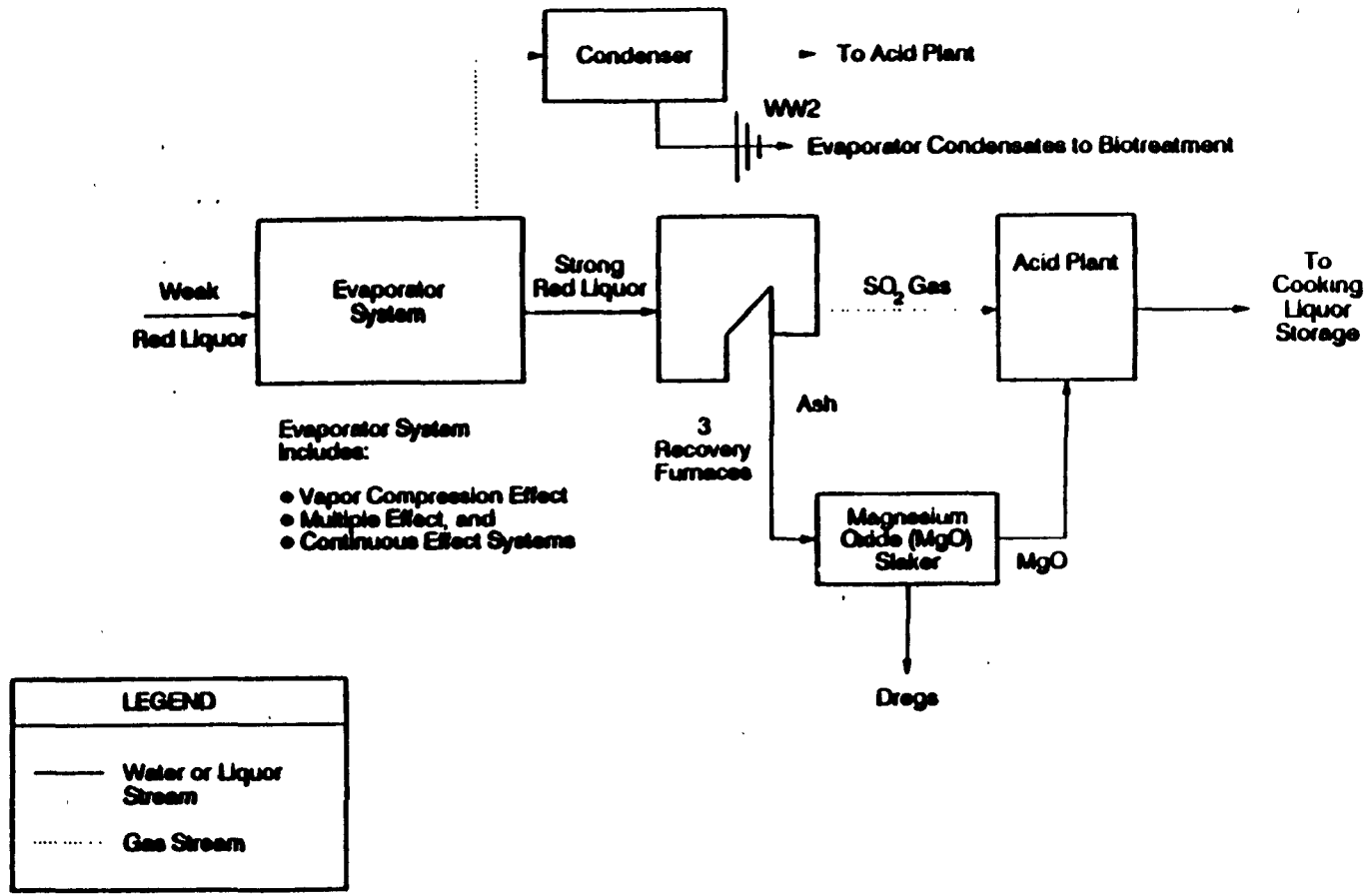

Figure A-28. Chemical Recovery at Site 5

areas of the plant while processing both paper grade and dissolving grade pulp.

Air emissions were sampled at 7 locations within the plant. These are identified in Table A-16. The results of the air emission testing are summarized in Table A-17 for the samples collected while processing dissolving grade pulp and in Table A-18 for the samples collected while processing paper grade pulp.

Liquid process stream samples were collected at 16 locations while processing both types of pulp. Sampling locations are identified in Table A-19. The results of the analyses of these samples are summarized in Table A-20 for both paper grade and dissolving grade pulp. Additional details of the field tests at site 5 are available in the detailed test reports for the site.[10,11]

Table A-16. Gas Sampling Locations at Site 5

Location	Identifier
Green stack[1]	V1
Roof vent[2]	V2
No. 2 (E stage) combined seal tank vent	V3
No. 2A (E stage) combined seal tank vent	V3A
No. 3 seal tank vent	V4
Oxygen stage blow tank vent	V7
Nuisance scrubber inlet	V8

[1] This vent includes the C-stage tower, washer, and seal tank (no chlorine was added at the stage during the test), E1-stage washer, P/H-stage tower and washer, and D-stage tower.

[2] This vent includes the E2-stage washer and the D-stage washer.

Table A-17. Gas Sampling Results at Site 5 - Dissolving Grade Pulp (lb/hr)

	Sampling Locations				
Compound	V1	V2	V4	V7	V8
Acetaldehyde[a]	0.004	0.009	NA	NA	0.051
Acetone[a]	0.585	0.240	NA	NA	0.027
Acetone[b]	0.143	NA	NA	NA	0.000
Acrolein[a]	0.057	0.002	NA	NA	0.000
Chlorine[c]	22.25	--	NA	NA	NA
Chlorine[d]	9.096	--	NA	NA	NA
Chlorine dioxide[d]	1.887	--	NA	NA	NA
Chloroform[d]	0.362	0.103	NA	NA	NA
Chloroform[b]	0.095	NA	NA	NA	--
Formaldehyde[a]	0.006	0.002	NA	NA	0.000
Hydrogen chloride[c]	0.216	0.009	NA	NA	NA
Methanol[a]	0.200	0.144	NA	NA	3.607
Methyl ethyl ketone[a]	0.168	0.043	NA	NA	0.002
Methyl ethyl ketone[b]	0.085	NA	NA	NA	--
Methylene chloride[d]	--	0.016	NA	NA	NA
Methylene chloride[b]	0.001	NA	NA	NA	0.001
Propionaldehyde[a]	0.005	0.003	NA	NA	0.003
Chloroform[b]	0.082				
Chloromethane[b]	0.048				0.027
2-Butanone[b]	0.074				
Methylene chloride[b]	0.001				0.007
Acetone[b]	0.124				
a-Pinene[b]	--				0.002
p-Cymene[b]	0.042				0.258
Hexachlorocyclo-pentadiene[f]	0.001				
p-Cymene[f]	0.028				0.343
a-Pinene[f]	--				0.001
Total hydrocarbons[e]	0.911	0.438	0.072	3.389	2.708

[a] - Obtained using Method 0011
[b] - Obtained using VOST
[c] - Obtained using Method 26A
[d] - Obtained using NCASI
[e] - Obtained using Method 25A
[f] - Obtained using SEMIVOST
-- Not analyzed
NA - Not applicable

Table A-18. Gas Sampling results at Site 5 - Paper Grade Pulp (lb/hr)

	Measurement Locations						
Compound	V1	V2	V3	V3A	V4	V7	V8
Acetaldehyde[a]	0.015	NA	NA	NA	NA	NA	0.018
Acetone[a]	0.039	NA	NA	NA	NA	NA	0.014
Acetone[b]	0.001	NA	NA	NA	NA	NA	0.001
Acrolein[a]	0.176	NA	NA	NA	NA	NA	0.000
Chlorine[c]	4.363	NA	NA	NA	NA	NA	NA
Chlorine[d]	3.867	NA	NA	NA	NA	NA	NA
Chlorine dioxide[d]	0.396	NA	NA	NA	NA	NA	NA
Chloroform[d]	0.030	NA	NA	NA	NA	NA	NA
Chloroform[b]	--	NA	NA	NA	NA	NA	--
Formaldehyde[a]	0.003	NA	NA	NA	NA	NA	0.000
Hydrogen chloride[c]	0.389	NA	NA	NA	NA	NA	NA
Methanol[a]	0.117	NA	NA	NA	NA	NA	2.175
Methyl ethyl ketone[a]	0.031	NA	NA	NA	NA	NA	0.001
Methyl ethyl ketone[b]	--	NA	NA	NA	NA	NA	0.000
Methylene chloride[d]	--	NA	NA	NA	NA	NA	NA
Methylene chloride[b]	0.033	NA	NA	NA	NA	NA	--
Propionaldehyde[b]	0.003	NA	NA	NA	NA	NA	0.001
Bromomethane[b]							0.006
Chloromethane[b]							0.046
Methylene chloride[b]	0.030						
Acetone[b]	0.001						0.006
1,2,3-Trichloropropane[b]							0.003
a-Pinene[b]							0.031
b-Pinene[b]							0.014
p-Cymene[b]							0.132
Hydroquinone[f]							0.003
p-Cymene[f]	0.069						0.531
a-Pinene[f]	0.001						0.037
b-Pinene[f]							0.001
Total hydrocarbons[e]	0.445	0.250	0.007	0.160	0.005	1.309	3.298

[a] - Obtained using Method 0011
[b] - Obtained using VOST
[c] - Obtained using Method 26A
[d] - Obtained using NCASI
[e] - Obtained using Method 25A
[f] - Obtained using SEMIVOST
-- Not analyzed
NA - Not applicable

Table A-19. Liquid Sampling Locations at Site 5

Location	Identifier
Pulp into brownstock washer	P1
Weak red liquor from 1st stage of brownstock	P2
Pulp into O_2 tower	P3
Pulp into E tower	P4
Pulp into E washer	P5
Pulp into D washer	P6
Pulp into last cell of P/H tower	P7
Pulp into C/D washer	P8
Pulp into C/D tower	P9
Pulp into P/H tower	P10
Pulp out of D washer	P11
Nuisance scrubber effluent	WW1
Evaporator condensates	WW2
Acid sewer	WW3
Caustic sewer	WW4
White washer	WW5

Table A-20. Measured Constituent Concentrations at Site 5 (ug/mL)

	Measurement Points															
Compound	P1	P2	P3	P4	P5	P6	P7	P8	P9	P10	P11	WW1	WW2	WW3	WW4	WW5
Paper Grade Pulp																
Formaldehyde (a)	0.903	0.440	17.500	17.000	1.568	1.167	17.500	12.110	21.677	16.833	18.000	0.695	1.422	1.500	1.440	1.267
Acetaldehyde (a)	<0.02	0.203	0.497	1.740	0.297	0.023	0.342	0.223	0.125	0.325	0.300	<0.02	0.332	0.020	0.173	0.020
Acetone (a)	3.267	1.773	81.250	30.200	37.000	0.637	8.433	2.013	6.238	13.067	24.400	0.905	0.582	0.240	43.000	0.210
Acrolein (a)	6.687	1.253	0.240	<0.19	0.255	<0.03	0.037	<0.19	0.062	0.068	<0.19	<0.03	7.402	<0.03	0.173	<0.03
Propionaldehyde (a)	0.027	0.057	1.733	1.840	0.222	0.081	1.367	1.063	0.318	1.367	1.433	<0.03	0.113	0.077	0.170	0.070
Methyl ethyl ketone (a)	0.123	0.100	3.017	5.520	4.633	0.090	1.950	1.110	1.125	1.833	23.333	0.110	0.083	0.100	6.673	0.093
a-Pinene (a)	ND	ND	--	--	--	--	--	--	--	--	--	ND	ND	--	--	--
b-Pinene (a)	ND	ND	--	--	--	--	--	--	--	--	--	ND	ND	--	--	--
Methylene chloride (a)	--	--	664	672	813	581	640	607	570	608	649	--	--	646	742	790
Chloroform (a)	--	--	<0.50	<0.50	<0.50	<0.50	1.680	<0.50	<0.50	2.550	<0.50	--	<0.50	0.533	<0.50	<0.50
Methanol (a)	539	535	35	86	92	7	4	3	45	3	2	350	382	15	79	ND
Dissolving Grade Pulp																
Formaldehyde (a)	0.050	0.050	15.333	17.333	0.953	0.600	12.667	0.870	0.593	15.667	15.000	0.190	0.787	0.720	0.980	0.570
Acetaldehyde (a)	<0.02	<0.02	0.550	0.757	1.977	<0.02	0.383	<0.02	<0.02	0.237	0.220	<0.02	0.313	<0.02	2.300	<0.02
Acetone (a)	1.800	1.100	18.127	9.433	5.567	0.590	24.333	0.380	8.177	2.967	2.700	0.180	0.433	0.220	5.500	0.080
Acrolein (a)	<0.03	<0.03	<0.19	<0.19	<0.03	<0.03	<0.19	<0.02	<0.02	<0.19	<0.19	<0.03	<0.03	<0.03	<0.03	<0.03
Propionaldehyde (a)	<0.03	<0.03	1.833	1.933	0.157	0.070	1.767	0.090	0.077	1.500	1.600	<0.03	<0.03	0.080	0.170	0.080
Methyl ethyl ketone (a)	0.090	0.080	1.700	1.133	0.427	0.080	1.367	0.180	0.140	1.137	1.900	0.050	0.120	0.090	0.320	0.060
a-Pinene (a)	ND	ND	--	--	--	--	--	--	--	--	--	ND	ND	--	--	--
b-Pinene (a)	ND	ND	--	--	--	--	--	--	--	--	--	ND	ND	--	--	--
Methylene chloride (a)	--	--	ND	ND	0.933	<0.50	<0.50	<0.50	1.033	ND	2.600	--	--	ND	ND	ND
Chloroform (a)	--	--	<0.50	<0.50	<0.50	<0.50	<0.50	<0.50	<0.50	<0.50	<0.50	--	--	<0.50	<0.50	<0.50
Methanol (a)	758	808	48	76	78	22	11	ND	ND	ND	8	22	497	8	80	ND

-- Not sampled
ND - Not detected
a - Obtained using whole waste analyses (HPLC/GC)

A.3 REFERENCES

1. Entropy Environmentalists, Inc. Testing of Non-Combustion Processes in a Pulp and Paper Facility Site 1. Data Summary Report. Prepared for U.S. Environmental Protection Agency, Research Triangle Park, NC. November 1992.

2. Entropy Environmentalists, Inc. Testing of Non-Combustion Processes in a Pulp and Paper Facility Site 1. Draft. Prepared for U.S. Environmental Protection Agency, Research Triangle Park, NC. August 1992.

3. Roy F. Weston, Inc. Field Test Data Summary for Site 2. Prepared for U.S. Environmental Protection Agency, Research Triangle Park, NC. December 1992.

4. Roy F. Weston, Inc. Hazardous Air Pollutant Emission and Process Report Volumes I - IV Site 2. Draft. Prepared for U.S. Environmental Protection Agency, Research Triangle park, NC. October 1992.

5. Roy F. Weston, Inc. Field Test Data Summary for Site 3. Prepared for U.S. Environmental Protection Agency, Research Triangle Park, NC. December 1992.

6. Roy F. Weston, Inc. Hazardous Air Pollutant Emission and Process Report Volumes I - IV Site 3. Draft. Prepared for U.S. Environmental Protection Agency, Research Triangle Park, NC. October 1992.

7. Roy F. Weston. Field Test Data Summary for Site 4. Prepared for U.S. Environmental Protection Agency, Research Triangle Park, NC. December 1992.

8. Roy F. Weston. Hazardous Air Pollutant Emission and Process Report Volumes I - IV Site 4. Draft. Prepared for U.S. Environmental Protection Agency, Research Triangle Park, NC. September 1992.

9. Trip Report. Visits to Site 5 on May 15, 1991 and August 20, 1991.*

10. Roy F. Weston. Field Test Data Summary for Site 5. Prepared for U.S. Environmental Protection Agency, Research Triangle Park, NC. December 1992.

11. Roy F. Weston, Inc. Hazardous Air Pollutant Emission and Process report Volumes I - IV Site 5. Draft. Prepared for U.S. Environmental Protection Agency, Research Triangle Park, NC. October 1992.*

---

* This information is located in the confidential files of the Director, Emission Standards Division, Office of Air Quality Planning and Standards, U.S. Environmental Protection Agency, Research Triangle Park, North Carolina 27711. This information is confidential pending final review by the company and is not available for public inspection.

APPENDIX B

AIR EMISSION ESTIMATES AND EMISSION FACTORS

APPENDIX B
AIR EMISSION ESTIMATES AND EMISSION FACTORS

B.1 INTRODUCTION

This appendix presents the methods by which air emission factors from pulp and paper manufacturing processes were estimated and presents the resulting air emission factors in a series of tables. The developed emission factors were based on either the results from a sampling and analysis program at five pulp and paper mills or on existing literature values. Data from the sampling and analysis program at five mills are presented in Appendix A.

B.2 DISCUSSION

Air emission factors were developed for a large number of emission sources in the pulp and paper industry based on the results of a test program at five different pulp and paper mills involving both vent sampling and liquid measurements of process materials. Emission factors were calculated in units of grams of air emissions per megagram of air dried pulp produced (g/Mg pulp). Several different procedures were used to calculate emission factors depending on the type of emission source and the types of data available for the source. These procedures included the following:

- Air emission factor calculations from the direct measurements at a tested vent.
- Air emission factor estimation based on the direct measurement of the composition of the liquid stream associated with the vent.
- Air emissions estimation from wastewater collection and treatment based on theoretical losses from model collection and treatment systems.
- Air emission factor estimates for black liquor storage tanks using a modification of the conventional storage tank emission equations.

B.3 EMISSION FACTORS ESTIMATED FROM VENT MEASUREMENTS

When the vent rate and chemical composition was measured for a specific emission source or vent, an emission factor can be estimated by dividing the mass emission rate of the vent (grams per day) by the mass flow rate of air dried pulp (megagrams or metric tons per day). The units of the emission factor are therefore grams of emissions per metric ton of air dried pulp (g/Mg pulp).

The flow rates of pulp used in the calculations of emission factors are based on reported plant production rates or on typical operating conditions.

B.4 EMISSION FACTORS ESTIMATED FROM LIQUID MEASUREMENT

When direct vent measurements are unavailable, liquid measurements representative of the material being processed can be used to theoretically estimate the air emission rate from the units. These theoretical estimates are based on equilibrium partitioning of the volatile components between the liquid phase and the gas phase. Since the equilibrium partitioning factor depends on temperature, a theoretical method was developed to estimate the effect of temperature on the equilibrium partitioning.

Values of the Henry's law constants from EPA's compound property data base were used as an estimate of the value of the partition coefficient in the process stream at a temperature of 25 °C. This value of the partitioning coefficient may be adjusted to represent other temperatures using the Antoines Coefficients for each compound.

$$P_T = EXP\left(A - \frac{B}{C+T}\right) \quad (1)$$

$$P_{25} = EXP\left(A - \frac{B}{C+25}\right) \quad (2)$$

where,

P_T = Vapor pressure at temperature T (mmHg).

T = Temperature (°C).

A,B,C = Antoines Coefficients.

P_{25} = Vapor pressure at 25 °C.

The values of A, B, and C are the Antoine's coefficients for the vapor pressure correlation with temperature. Equation (1) illustrates how the Antoine's coefficients can be used to estimate the vapor pressure at any temperature and Equation (2) shows the equation for a temperature of 25 °C. Dividing equation 1 by equation 2, yields the ratio of vapor pressure at

$$\frac{P_T}{P_{25}} = EXP\left(-\frac{B}{C+T} + \frac{B}{C+25}\right) \qquad (3)$$

temperature T to the vapor pressure at the reference temperature of 25 °C. This is illustrated in Equation (3).

The value of the Henry's Law constant from the data base is then adjusted by the vapor pressure ratio to obtain an estimate of the Henry's law constant at the new temperature as follows:

$$H_T = H_{25}\left(\frac{P_T}{P_{25}}\right) \qquad (4)$$

where,

H_T = Henry's law constant at temperature T.

H_{25} = Henry's law constant at 25 °C.

B.5 METHOD OF ESTIMATING THE PARTITION FRACTION IN MIXED TANKS

When gas and liquid are mixed in a tank, some of the volatile material in each of the two phases can partition into the other phase. If chemical equilibrium between the two phases is achieved in the mixture leaving the tank, the partitioning of

the volatile components into the two phases can be described by partition coefficients.

The bleach plant/brownstock washer shown in Figure B-1 can be used as an example of two-phase partitioning. In this example case, chloroform is emitted from the vent of the bleach plant washer. It is assumed that the concentration of chloroform is unknown for both the process pulp liquid entering the washer and for the entering spray. It is also assumed that the concentrations of chloroform in the pulp discharged from the washer is known from sampling and analysis of the liquid leaving the washer at the exiting pulp stream or at the recycle stream produced from the washed pulp. By assuming that the concentration of chloroform in the liquid inside the washer is the same as the concentration in the liquid leaving the washer, emissions from the vent can be estimated using the ratio of the volatilized component in the exiting vapor phase to the component in the exiting liquid phase in conjunction with the Henry's law constant. This is illustrated below:

$$f = \frac{mol\ vapor}{mol\ liquid} = H_T \frac{G}{L\ p} d_G \qquad (5)$$

where,

f = The ratio of the exiting component in the gas phase to the component in the exiting liquid.

H_T = Henry's law constant at temperature T, atm-m^3/mol.

G = Gas flow rate, m^3/s.

L = Liquid flow rate, m^3/s.

p = Atmospheric pressure (assumed to be one atmosphere).

d_G = Gas density, moles/m^3.

The overall fraction of volatile material in the entering process liquid that exits with the gas is estimated as follows:

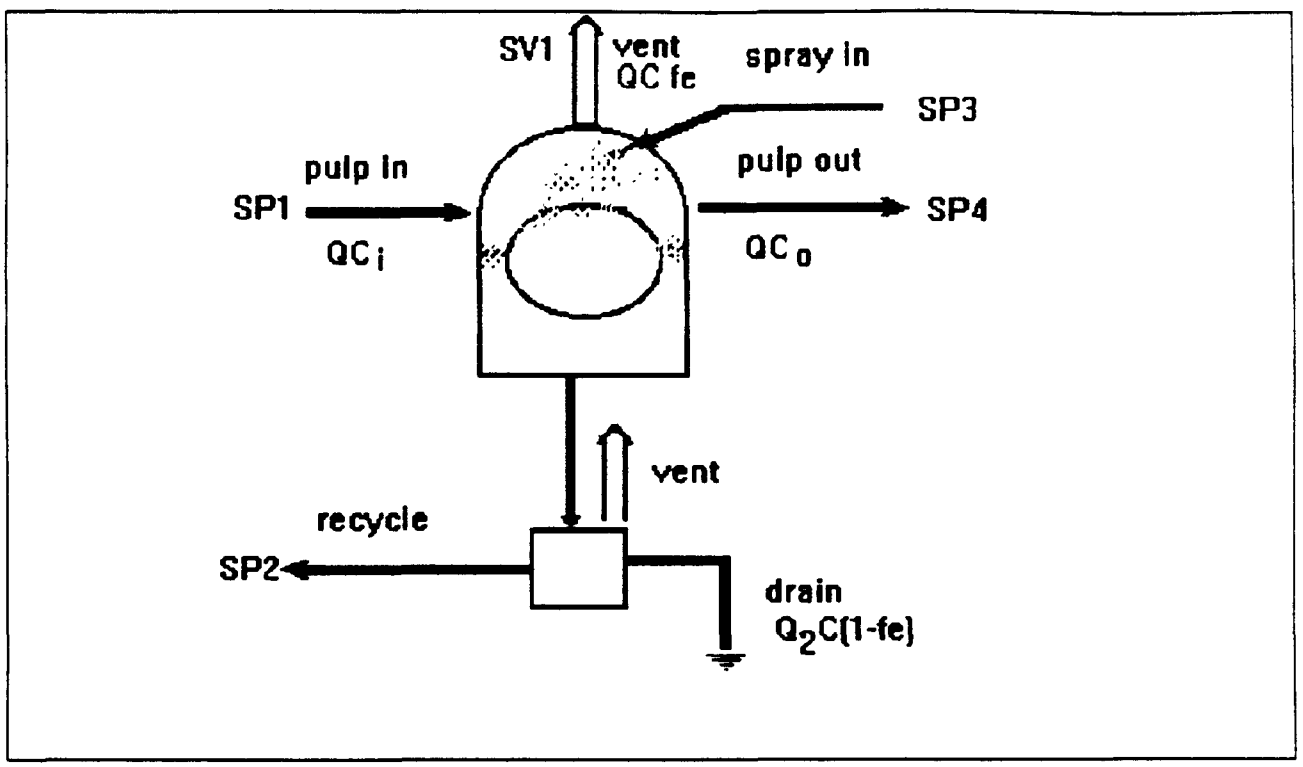

Figure B-1. Illustration of Air Emissions from a Bleach Plant/Brownstock Washer.

$$F = \frac{f}{1 + f} \qquad (6)$$

where,

F = The fraction of total volatile material entering the reactor that exits in the gas phase.

As a numerical example, assume that eleven grams per second of chloroform enters a washer, one gram per second of chloroform is vented from the washer, and the remaining chloroform exits with the water (10 grams per second). The fraction in the vapor is f = 1/10, or f = 0.1. The fraction of the entering chloroform that exits in the vapor phase is given by

$$F = f / (1+f) \text{ or } F = 0.1 / (1 + 0.1) \text{ or } F = 1 / 11 \qquad (7)$$

An air emission factor can be estimated based on the unit characteristics and the fraction of volatiles lost from the unit using the following equation:

$$E = C_L F L \qquad (8)$$

where,

E = Air emission factor (g/Mg pulp).

C_L = Concentration of the component in the liquid (g/m^3).

F = Fraction of the component in the entering liquid phase that is emitted as air emissions.

L = Liquid flow rate (m^3/Mg pulp).

The following example illustrates the procedure for calculating an air emission rate. In the EPA field test program, liquid process stream samples were taken at the entrance of a bleach plant/brownstock washer identified in Table A-15 as

Sampling Point SP1 at Site 4.[1] The concentration of acetone in these samples was determined to be 4.327 mg/L and the concentration of pulp in the stream was determined to be 0.0163 g pulp/g slurry. The measured vent rate was 90.5 m^3/Mg pulp. In this example, the concentration of acetone in the washer is estimated to be the same as the concentration in the inlet pulp slurry.

The molar volume of the gas exiting from the washer vent is calculated from the ideal gas law: 0.02887 m^3/mol. The volume of liquid per Mg of dry pulp is calculated as 1/.0163, or 61 m^3/Mg pulp. Using this information, the partition fraction of acetone in the washer may be estimated from Equation (5) above as follows:

$$f = H_T \frac{G}{L} d_G = 0.000169 \frac{90.5}{61.4} \frac{1}{0.02887} = 0.0086 \qquad \textbf{(9)}$$

where,

f = Ratio of the exiting component in the gas phase to the component in the exiting liquid.

H_T = Henry's Law constant, 0.000169 atm-m^3/mol.

G/L = Ratio of gas flow rate to the liquid flow rate, 90.5/61.4 m^3 gas/m^3 liquid.

d_G = Gas density, 1/0.02887 moles/m^3.

The overall fraction of the entering acetone that exits with the gas is estimated using Equation (6) as follows:

$$F = \frac{f}{1 + f} = \frac{0.0086}{1 + 0.0086} = 0.00857 \qquad \textbf{(10)}$$

The air emission factor for acetone can now be estimated from the unit characteristics and the fraction lost from the unit using Equation (8):

$$E = C_L F L = 4.327 \times 0.00857 \times 61.3 = 2.27 \ g/Mg\ pulp \qquad \textbf{(11)}$$

where,

E = Air emission factor, 2.27 g/Mg pulp.

C_L = Concentration of the component in the liquid, 4.327 g/m^3.

F = The fraction of the component in the entering liquid phase that is emitted as air emissions, 0.00857.

L = liquid flow rate, 61.3 m^3/Mg pulp.

B.6 COMPARISON OF ESTIMATED AIR EMISSIONS FROM LIQUID CONCENTRATIONS

Emission estimates based on direct measurement of vent gas samples are generally the most accurate means of calculating emission factors. However, in situations where no gas sampling data are available, emission estimates based on measured constituent concentraitons in the liquid process streams from which the vent gases evaporate can produce reasonable emission factor estimates. This is illustrated by the information in Table B-1, which contains air emission estimates based on information obtained from Site 4 of the EPA field test program. The table contains estimates of emissions based on both gas samples from test point SVI, a bleach plant/brownstock washer vent in the softwood plant, and liquid samples of the process streams in the bleach plant/brownstock washer (Test Points SP1, SP2, SP3, and SP4). As can be seen, air emissions estimated from the liquid concentrations are relatively consistent with the estimates based on vent sampling for most of the sampling points. Liquid sampling would be expected to produce valid emission estimates if accurate data are obtained for:

- constituent concentrations in the liquid,
- liquid and gas flow rates,
- liquid temperature, and
- Henry's law constants.

B.7 ESTIMATION OF AIR EMISSIONS FROM MATERIAL BALANCES

If data from sampling and analysis are unavailable for both vent gases and liquid process streams, there are some situations where a material balance might be used to estimate emission

rates. Examples where this approach might yield valid results would include situations where a large fraction of the volatile

TABLE B-1. SAMPLES COLLECTED AT A BLEACH PLANT/BROWNSTOCK WASHER[1]

Compound	Air emission factors (g/Mg pulp)				
	SV1[a]	SP1[b]	SP2[b]	SP3[b]	SP4[b,c]
Acetone	3.04	2.27	2.51	1.67	7.82
Methyl ethyl ketone	1.2	1.22	1.46	1.178	93
Methanol	45	146	147	125	34
Type of sample	VENT	PULP	WATER	WATER	PULP
Inlet or outlet	OUT	IN	OUT	IN	OUT

[a] The values of the air emission factors for the vent are obtained from the reported emission rate (lb/hr, Table A-13) divided by the pulp rate (0.0849 million lb air dried pulp/hr).

[b] These values were estimated from process liquid measurements reported in Table A-15, using procedures described in the preceding text.

[c] The results from this sample point are inconsistent with the other sample points presented in this table.

components of a stream is released to the air. In cases where the fraction of volatiles released to the air is low or is at or below the detection limits of available test methods, a material balance approach would not be expected to generate valid data.

B.8 MODEL WASTEWATER PLANT PARAMETERS

In developing emissions factors for wastewater collection and treatment units, EPA used the procedures described above and an example model wastewater collection and treatment system. The characteristics of the model system used for the estimates are described in Tables B-2 and B-3. Table B-2 presents the assumed waste stream flow rates and Table B-3 lists the elements within the model wastewater collection and treatment system.

The Agency is currently revising the model wastewater collection and treatment system and anticipates the emission factors presented here will change.

B.9 ESTIMATION OF AIR EMISSIONS FROM WASTEWATER COLLECTION AND TREATMENT SYSTEMS

Emission factors for wastewater collection and treatment systems at pulp and paper plants were calculated based on measured concentrations of pollutants in the wastewater streams together with the mass flow rate of the streams. The total fraction of volatiles emitted from a system was estimated by summing the estimated emissions from each collection system element using the following equation.

$$F_t = \sum_{i=1}^{i=n} f_{e_i} f_{o_{i-1}} \qquad (12)$$

where,

F_t = Total fraction of a constituent emitted to the air from the collection and/or treatment system.

f_{ei} = Fraction of a constituent emitted to the air in unit i.

$f_{o(i-1)}$ = Fraction of the initial constituent concentration that remains in the waste entering unit i.

TABLE B-2. MODEL PLANT FLOW RATES OF WASTE STREAMS[2]

Waste stream	location	m^3/Mg pulp
acid wastewater	bleach plant C or CD washer	15
caustic wastewater	bleach plant E washer	13
digester wastewater	pulping	1.2
clean condensates	evaporator	6
foul condensates	evaporator	7
turpentine underflow	pulping gas condensates	0.16
continuous blow condensates	pulping	1
blow tank condensates	pulping	2
weak black liquor	storage tank for treatment, recycle to pulping	11
scrubber effluent	bleach plant scrubber	0.06
other	bypass clarifier, sent directly to aeration basin	12

TABLE B-4. MODEL PLANT SEQUENCE OF COLLECTION SYSTEM ELEMENTS AND TREATMENT SYSTEM ELEMENTS.[a,3]

Name of unit	Model for calculations
Trench	trench
Drains	equilibrium headspace, collection system models
Junction box	aerated impoundment, Chemdat7
Collection main	manhole cover venting
Junction box	aerated impoundment, Chemdat7
Collection main	manhole cover venting
Clarifier	clarifier, Water7
Aerated impoundment	aerated impoundment, Chemdat7
Non aerated impoundment	non aerated impoundment, Chemdat7

[a] This table presents the basis for the estimation of the emission factors from wastewater collection and treatment.

n = Total number of units in the wastewater collection and/or treatment system.

If air emissions are the only source of loss of a constituent from a waste stream, the fraction of volatiles that remain in the waste stream leaving a unit is equal to the product of the fraction of volatiles in the waste stream entering the unit and one minus the fraction emitted in the unit.

$$f_{o_i} = f_{o_{i-1}}(1 - f_{e_i}) \tag{13}$$

where,

f_{oi} = the fraction of volatiles in the waste stream leaving a wastewater collection or treatment unit.

When volatiles are lost from a waste stream by mechanisms other than the air emissions, such as biodegradation and adsorption, these other mechanisms must be accounted for in the calculation of the fraction of volatiles in the waste stream leaving the unit.

Once the total fraction of constituent emitted from a wastewater collection and/or treatment system is calculated, an emission factor for the system can be estimated as follows:

$$E_f\left(\frac{g}{Mg\ pulp}\right) = Q\left(\frac{m^3}{Mg\ pulp}\right) C\left(\frac{g}{m^3}\right) F_t \tag{14}$$

where,

E_f = Emission factor.

Q = The wastewater flow rate.

C = Concentration of volatiles.

F_t = the total fraction emitted.

Several example calculations of emission factors for wastewater collection and treatment units can be found in Reference 4.

B.10 ESTIMATION OF AIR EMISSIONS FROM BLACK LIQUOR STORAGE TANKS

Weak black liquor is generated during pulping operations at an estimated rate of 11 m^3 per Mg dry pulp.[5] This wastewater is normally collected in large storage tanks which are equipped with vents which can release substantial quantities of air emissions due to changes in the liquid level in the tank and to atmospheric conditions. The tank in the model unit has a conical roof with a large central vent.[6] No emission measurements were available for this source and it thus became necessary to develop a theoretical approach to estimating emission rates from these sources. During use, the wastewater level in the tank is more constant than the working rate of liquid exchange would suggest, thus, it is not realistic to assume that the quantity of gas emitted from the vent would be equal to the working rate of liquid exchange. Furthermore, there will be vent flow due to wind effects and due to the stack effect created by warm moist air in the tank, which would tend to make the vent rate greater than the contribution from working losses alone. It is also uncertain whether equilibrium between the liquid and gas phase will be achieved in the storage tank, especially for the larger vent rates, which is a further consideration in the selection of the vent rate. Considering all of these factors, it was assumed that saturated vapors would be emitted at a rate equal to half of the working rate of liquid exchange.

Table B-4 lists a set of emission factors for storage tanks containing black liquor. The emission factor values are primarily determined by the volatility of each individual compound.

Table B-4. AIR EMISSION FACTORS FOR BLACK LIQUOR STORAGE TANKS

Compound	Fraction emitted as air emissions
acetone	0.001
2-butanone (MEK)	0.003
methanol	0.000
acrolein	0.002
acetaldehyde	0.002
alpha pinene	0.055
beta pinene	0.039
a-terpineol	0.010
chloroform	0.065
methylene chloride	0.061
formaldehyde	0.001
dimethyl sulfide	0.100
dimethyl disulfide	0.041
dichlorothiophene	0.017
dichloroacetonitrile	0.007
toluene	0.120
chloromethane	0.143
p cymene	0.254
proprionaldehyde	0.001
111 trichloroethane	0.261

B.11 SELECTION OF EMISSION FACTORS

Emission factors were developed for a large number of sources in the pulp and paper industry. For many of these sources, emission factors were calculated in more than one way resulting in multiple values for some constituents. Additionally, emission factors for some of the sources have been previously estimated by others and are available in existing literature sources. Under these circumstances, the goal of the Agency was to select the emission factor value that best represents actual emissions. To assist in achieving this goal, a protocol was established to determine the most appropriate emission factor value to use for the source with multiple estimates of emission factors available. The established protocol takes into account the type of source tests performed, the test methods used, quality control measures taken, adequacy of the test procedures and test documentation, and the consistency of test results. Table B-6 lists the considerations used in selecting an emission factor from the available data.

The beach plant/brownstock washer illustrated in Figure B-1 can be used as an example of a typical procedure for selecting an emission factor when multiple estimates are available. For this example, acetone emission factor estimates were made for two liquid samples at site 3 and for 4 liquid samples and 1 vent sample at site 4. These estimates were compared with the emission factor available from the literature as shown in Table B-6. Examination of these data indicate that the emission factor estimate available in the literature is reasonably consistent with the test results from Site 3 but not with the test results from Site 4 where the concentration of acetone in the pulp was almost an order of magnitude lower than at site 3. Because of the relatively good agreement between the literature value and the results obtained for Site 3 for both liquid and vent samples, it was concluded that the most appropriate action was to retain the existing literature value without change.

TABLE B-5. CONSIDERATIONS IN SELECTING EMISSION FACTORS. (LISTED IN ORDER OF IMPORTANCE)

1	Quality of documentation and quality control procedures for on-site sampling.
2	Type of test reported. Vent measurements of emissions are preferred to estimations of vent emissions from liquid measurements.
3	Source characterization and documentation.
4	Representativeness of the source.
5	Number of compound analyses included in the field test.
6	Consistency with other measurements and related sources (Is the data point an outlier?).
7	Conflicts between two different test methods of reported measurements for the same compound are resolved by selecting the higher measurement if there is reason to believe that there is incomplete compound recovery for the lower measurement.

TABLE B-6. EMISSION FACTOR SELECTION FOR ACETONE EMISSION FROM A SOFTWOOD BLEACH PLANT/BROWNSTOCK WASHER.

Sample Identification	Test Site	Sample Type	Calculated Emission Factor (g/Mg dry pulp)
SP3	3	Liquid	27
SV1	4	Vent	3.04
SP1	4	Liquid	2.27
SP2	4	Liquid	2.51
SP3	4	Liquid	1.67
SP4	4	Liquid	7.82
SP1	3	Liquid	38
Emission factor from literature			33
Selected emission factor			33

Procedures similar to this were used in the selection of each of the emission factors presented in the following discussion.

Table B-7 contains a list of 237 individual sources used to characterize model plants for the pulp and paper industry. A typical pulp and paper process unit would be expected to contain some subset of the individual sources described in Table B-7. The table contains a description of each individual source, an identifying number, i.e., an "EP Code", for each source, the type of pulp used as the basis for an emission factor (i.e., hardwood or softwood), and the mill process involved (e.g., pulping, bleaching). For each individual source listed, the table also identifies the source of information that served as the basis for estimating the emission factor or describes how the emission factor was estimated in the absence of source measurements.

Sources of information utilized as a basis for emission factors included both field test data and data from existing literature sources. Data were not found for all of the emission sources, which led to the use of alternative approaches to estimate emission factors for these sources. Several such alternatives were developed.

One approach was to assume that the emission factor for a source with no data was the same as the emission factor for another source with data if the emissions characteristics of the two sources were judged to be very nearly the same. Another approach was to establish a series of factors to relate the emission factor values from one set of emission sources to another set of sources. For example, data for emission sources for which data are available while processing both softwood and hardwood were used to establish a hardwood/softwood ratio. That ratio was then used to estimate emission factors for sources when data were only available for one category of wood. Another approach was to establish a set of factors to show the relative rate of emissions from individual units in series that sequentially handle a product stream. These factors were used to

TABLE B-7. EMISSION SOURCES AND DATA SOURCES

EP Code	Wood Type	Mill Process	Emission Point Description	Basis for Emission Factor
1	H	Bleaching	chlorine dioxide generation	Not used in Model Plants
2	S	Bleaching	chlorine dioxide generation	Not used in Model Plants
3	H	Bleaching	C-stage tower vent	Extrapolated[a] from EP Code 71
4	S	Bleaching	C-stage tower vent	Extrapolated from EP Code 72
7	H	Bleaching	C-stage acid sewer	Ratioed[b] from EP Code 8
8	S	Bleaching	C-stage acid sewer	Assumed same as EP Code 40
9	H	Bleaching	bleaching effluent	Not used in Model Plants
10	S	Bleaching	bleaching effluent	Not used in Model Plants
13	H	Bleaching	bleach plant vents	Not used in Model Plants
14	S	Bleaching	bleach plant vents	Not used in Model Plants
15	H	Bleaching	fugitives from Cl2 use	Not used in Model Plants
16	S	Bleaching	fugitives from Cl2 use	Not used in Model Plants
17	H	Bleaching	H-stage (0.1-<0.5%) vent	Assumed same as EP Code 19
18	S	Bleaching	H-stage (0.1-<0.5%) vent	Assumed same as EP Code 20
19	H	Bleaching	H-stage (0.5-2%) tower vent	Extrapolated from EP Code 151
20	S	Bleaching	H-stage (0.5-2%) tower vent	Extrapolated from EP Code 152
21	H	Bleaching	H-stage (<0.5%) vent	Not used in Model Plants

TABLE B-7. EMISSIONS SOURCES AND DATA FACTORS (CONTINUED)

EP Code	Wood Type	Mill Process	Emission Point Description	Basis for Emission Factor
22	S	Bleaching	H-stage (<0.5%) vent	Not used in Model Plants
23	H	Bleaching	H-stage (>2%) vent	Not used in Model Plants
24	S	Bleaching	H-stage (>2%) vent	Not used in Model Plants
25	H	Bleaching	no H-stage use, vent	Not used in Model Plants
26	S	Bleaching	no H-stage use, vent	Not used in Model Plants
27	H	Bleaching	H-stage (0.1-<0.5%) wastewater	Not used in Model Plants
28	S	Bleaching	H-stage (0.1-<0.5%) wastewater	Not used in Model Plants
29	H	Bleaching	H-stage (0.5-2%) effluent	Not used in Model Plants
30	S	Bleaching	H-stage (0.5-2%) effluent	Not used in Model Plants
31	H	Bleaching	H-stage (<0.5%) wastewater	Not used in Model Plants
32	S	Bleaching	H-stage (<0.5%) wastewater	Not used in Model Plants
33	H	Bleaching	H-stage (>2%) wastewater	Not used in Model Plants
34	S	Bleaching	H-stage (>2%) wastewater	Not used in Model Plants
35	H	Bleaching	no H-stage use, wastewater	Not used in Model Plants
36	S	Bleaching	no H-stage use, wastewater	Not used in Model Plants
37	H	Bleaching	bleaching effluent w/slimacide	Not used in Model Plants
38	S	Bleaching	bleaching effluent w/slimacide	Not used in Model Plants

TABLE B-7. EMISSIONS SOURCES AND DATA FACTORS (CONTINUED)

EP Code	Wood Type	Mill Process	Emission Point Description	Basis for Emission Factor
39	H	Bleaching	ClO_2 subst. (0%) acid sewer	Ratioed from EP Code 40
40	S	Bleaching	ClO_2 subst. (0%) acid sewer	Site 5 (P3 DG, P4 DG[d], WW3 DG)
41	H	Bleaching	ClO_2 subst. (0%) caustic sewer	Ratioed from EP Code 42
42	S	Bleaching	ClO_2 subst. (0%) caustic sewer	Site 5 (P5 DG, WW4 DG)
43	H	Bleaching	ClO_2 subst. (0%) effluent	Not used in Model Plants
44	S	Bleaching	ClO_2 subst. (0%) effluent	Not used in Model Plants
45	H	Bleaching	ClO_2 subst. (0%) tower vent	Extrapolated from EP Code 75
46	S	Bleaching	ClO_2 subst. (0%) tower vent	Extrapolated from EP Code 76
47	H	Bleaching	ClO_2 subst. (100%) acid sewer	Assumed the same as EP Code 55
48	S	Bleaching	ClO_2 subst. (100%) acid sewer	Assumed the same as EP Code 56
49	H	Bleaching	ClO_2 subst. (100%) caustic sewer	Assumed the same as EP Code 57
50	S	Bleaching	ClO_2 subst. (100%) caustic sewer	Assumed the same as EP Code 58
51	H	Bleaching	ClO_2 subst. (100%) effluent	Not used in Model Plants
52	S	Bleaching	ClO_2 subst. (100%) effluent	Not used in Model Plants
53	H	Bleaching	ClO_2 subst. (100%) tower vent	Extrapolated from EP Code 79
54	S	Bleaching	ClO_2 subst. (100%) tower vent	Extrapolated from EP Code 80
55	H	Bleaching	ClO_2 subst. (high) acid sewer	Ratioed from EP Code 56

TABLE B-7. EMISSIONS SOURCES AND DATA FACTORS (CONTINUED)

EP Code	Wood Type	Mill Process	Emission Point Description	Basis for Emission Factor
56	S	Bleaching	ClO_2 subst. (high) acid sewer	Site 3 (SP6, WW6)
57	H	Bleaching	ClO_2 subst. (high) caustic sewer	Ratioed from EP Code 58
58	S	Bleaching	ClO_2 subst. (high) caustic sewer	Site 3 (SP7, WW5)
59	H	Bleaching	ClO_2 subst. (high) effluent	Not used in Model Plants
60	S	Bleaching	ClO_2 subst. (high) effluent	Not used in Model Plants
61	H	Bleaching	ClO_2 subst. (high) tower vent	Extrapolated from EP Code 83
62	S	Bleaching	ClO_2 subst. (high) tower vent	Extrapolated from EP Code 84
63	H	Bleaching	ClO_2 subst. (low) acid sewer	Site 1 (HP2), Site 4 (WW4)
64	S	Bleaching	ClO_2 subst. (low) acid sewer	Site 2 (WW5, P6), Site 4 (SP5), Site 1 (SP61, WW7)
65	H	Bleaching	ClO_2 subst. (low) caustic sewer	Site 4 (WW5), Site 1 (HP3)
66	S	Bleaching	ClO_2 subst. (low) caustic sewer	Site 2 (WW6, P7), Site 4 (SP6), Site 1 (SP71, WW8)
67	H	Bleaching	ClO_2 subst. (low) effluent	Not used in Model Plants
68	S	Bleaching	ClO_2 subst. (low) effluent	Not used in Model Plants
69	H	Bleaching	ClO_2 subst. (low) tower vent	Extrapolated from EP Code 87
70	S	Bleaching	ClO_2 subst. (low) tower vent	Extrapolated from EP Code 88
71	H	Bleaching	C-stage washer vent	Assumed the same as EP Code 87

TABLE B-7. EMISSIONS SOURCES AND DATA FACTORS (CONTINUED)

EP Code	Wood Type	Mill Process	Emission Point Description	Basis for Emission Factor
72	S	Bleaching	C-stage washer vent	Assumed the same as EP Code 88
73	H	Bleaching	C-stage seal tank vent	Extrapolated from EP Code 71
74	S	Bleaching	C-stage seal tank vent	Extrapolated from EP Code 72
75	H	Bleaching	ClO_2 subst. (0%) washer vent	Assumed the same as EP Code 87
76	S	Bleaching	ClO_2 subst. (0%) washer vent	Assumed the same as EP Code 88
77	S	Bleaching	ClO_2 subst. (0%) seal tank vent	Extrapolated from EP Code 76
78	H	Bleaching	ClO_2 subst. (0%) seal tank vent	Extrapolated from EP Code 75
79	H	Bleaching	ClO_2 subst. (100%) washer vent	Assumed the same as EP Code 83
80	S	Bleaching	ClO_2 subst. (100%) washer vent	Assumed the same as EP Code 84
81	H	Bleaching	ClO_2 subst. (100%) seal tank vent	Extrapolated from EP Code 79
82	S	Bleaching	ClO_2 subst. (100%) seal tank vent	Extrapolated from EP Code 80
83	H	Bleaching	ClO_2 subst. (high) washer vent	Site 4 (HP8, WW4)
84	S	Bleaching	ClO_2 subst. (high) washer vent	Site 4 (SV4), Site 1 (SP5, SP6)
85	H	Bleaching	ClO_2 subst. (high) seal tank vent	Extrapolated from EP Code 83
86	S	Bleaching	ClO_2 subst. (high) seal tank vent	Extrapolated from EP Code 84
87	H	Bleaching	ClO_2 subst. (low) washer vent	Site 1 (HP2)
88	S	Bleaching	ClO_2 subst. (low) washer vent	Site 1 (SP6), Site 2 (P6), Site 4 (SP5)

TABLE B-7. EMISSIONS SOURCES AND DATA FACTORS (CONTINUED)

EP Code	Wood Type	Mill Process	Emission Point Description	Basis for Emission Factor
89	H	Bleaching	ClO_2 subst. (low) seal tank vent	Extrapolated from EP Code 87
90	S	Bleaching	ClO_2 subst. (low) seal tank vent	Extrapolated from EP Code 88
91	H	Bleaching	E1-stage (0%) tower vent	Extrapolated from EP Code 93
92	S	Bleaching	E1-stage (0%) tower vent	Extrapolated from EP Code 94
93	H	Bleaching	E1-stage (0%) washer vent	Ratioed from EP Code 94
94	S	Bleaching	E1-stage (0%) washer vent	Site 5 (P5 DG), Site 2 (P7)
95	H	Bleaching	E1-stage (0%) seal tank vent	Extrapolated from EP Code 93
96	S	Bleaching	E1-stage (0%) seal tank vent	Extrapolated from EP Code 94
97	H	Bleaching	E1-stage (100%) tower vent	Extrapolated from EP Code 99
98	S	Bleaching	E1-stage (100%) tower vent	Extrapolated from EP Code 100
99	H	Bleaching	E1-stage (100%) washer vent	Ratioed from EP Code 100
100	S	Bleaching	E1-stage (100%) washer vent	Site 5 (SP5)
101	H	Bleaching	E1-stage (100%) seal tank vent	Extrapolated from EP Code 99
102	S	Bleaching	E1-stage (100%) seal tank vent	Extrapolated from EP Code 100
103	H	Bleaching	E1-stage (high) tower vent	Extrapolated from EP Code 105
104	S	Bleaching	E1-stage (high) tower vent	Extrapolated from EP Code 106
105	H	Bleaching	E1-stage (high) washer vent	Site 4 (HP9, WW5)

TABLE B-7. EMISSIONS SOURCES AND DATA FACTORS (CONTINUED)

EP Code	Wood Type	Mill Process	Emission Point Description	Basis for Emission Factor
106	S	Bleaching	E1-stage (high) washer vent	Site 4 (SV5, SP6), Site 1 (SP7)
107	H	Bleaching	E1-stage (high) seal tank vent	Extrapolated from EP Code 105
108	S	Bleaching	E1-stage (high) seal tank vent	Extrapolated from EP Code 106
109	H	Bleaching	E1-stage (low) tower vent	Extrapolated from EP Code 111
110	S	Bleaching	E1-stage (low) tower vent	Extrapolated from EP Code 112
111	H	Bleaching	E1-stage (low) washer vent	Site 1 (HP3)
112	S	Bleaching	E1-stage (low) washer vent	Site 1 (SP7)
113	H	Bleaching	E1-stage (low) seal tank vent	Extrapolated from EP Code 111
114	S	Bleaching	E1-stage (low) seal tank vent	Extrapolated from EP Code 112
115	H	Bleaching	D1-stage (0%) tower vent	Extrapolated from EP Code 117
116	S	Bleaching	D1-stage (0%) tower vent	Site 5 (P6 DG)
117	H	Bleaching	D1-stage (0%) washer vent	Ratioed from EP Code 118
118	S	Bleaching	D1-stage (0%) washer vent	Extrapolated from EP Code 116
119	H	Bleaching	D1-stage (0%) seal tank vent	Extrapolated from EP Code 117
120	S	Bleaching	D1-stage (0%) seal tank vent	Extrapolated from EP Code 118
121	H	Bleaching	D1-stage (100%) tower vent	Extrapolated from EP Code 123
122	S	Bleaching	D1-stage (100%) tower vent	Extrapolated from EP Code 124

TABLE B-7. EMISSIONS SOURCES AND DATA FACTORS (CONTINUED)

EP Code	Wood Type	Mill Process	Emission Point Description	Basis for Emission Factor
123	H	Bleaching	D1-stage (100%) washer vent	Assumed the same as EP Code 129
124	S	Bleaching	D1-stage (100%) washer vent	Assumed the same as EP Code 130
125	H	Bleaching	D1-stage (100%) seal tank vent	Extrapolated from EP Code 123
126	S	Bleaching	D1-stage (100%) seal tank vent	Extrapolated from EP Code 124
127	H	Bleaching	D1-stage (high) tower vent	Extrapolated from EP Code 129
128	S	Bleaching	D1-stage (high) tower vent	Extrapolated from EP Code 130
129	H	Bleaching	D1-stage (high) washer vent	Ratioed from EP Code 130
130	S	Bleaching	D1-stage (high) washer vent	Site 3 (SP8, SP11)
131	H	Bleaching	D1-stage (high) seal tank vent	Extrapolated from EP Code 129
132	S	Bleaching	D1-stage (high) seal tank vent	Extrapolated from EP Code 130
133	H	Bleaching	D1-stage (low) tower vent	Extrapolated from EP Code 135
134	S	Bleaching	D1-stage (low) tower vent	Extrapolated from EP Code 136
135	H	Bleaching	D1-stage (low) washer vent	Site 1 (HVIA)
136	S	Bleaching	D1-stage (low) washer vent	Site 1 (SP8, SP9) Site 2 (P9)
137	H	Bleaching	D1-stage (low) seal tank vent	Extrapolated from EP Code 135
138	S	Bleaching	D1-stage (low) seal tank vent	Assumed the same as EP Code 137
139	H	Bleaching	E2-stage tower vent	Extrapolated from EP Code 141

TABLE B-7. EMISSIONS SOURCES AND DATA FACTORS (CONTINUED)

EP Code	Wood Type	Mill Process	Emission Point Description	Basis for Emission Factor
140	S	Bleaching	E2-stage tower vent	Extrapolated from EP Code 142
141	H	Bleaching	E2-stage washer vent	Ratioed from EP Code 111
142	S	Bleaching	E2-stage washer vent	Ratioed from EP Code 112
143	H	Bleaching	E2-stage seal tank vent	Extrapolated from EP Code 141
144	S	Bleaching	E2-stage seal tank vent	Extrapolated from EP Code 142
145	H	Bleaching	D2-stage tower vent	Extrapolated from EP Code 147
146	S	Bleaching	D2-stage tower vent	Extrapolated from EP Code 148
147	H	Bleaching	D2-stage washer vent	Assumed the same as EP Code 135
148	S	Bleaching	D2-stage washer vent	Assumed the same as EP Code 136
149	H	Bleaching	D2-stage seal tank vent	Extrapolated from EP Code 147
150	S	Bleaching	D2-stage seal tank vent	Extrapolated from EP Code 148
151	H	Bleaching	H-stage (0.5-2%) washer vent	Ratioed from EP Code 152
152	S	Bleaching	H-stage (0.5-2%) washer vent	Site 5 (P7 DG), Site 2 (P8)
153	H	Bleaching	H-stage (0.5-2%) seal tank vent	Extrapolated from EP Code 151
154	S	Bleaching	H-stage (0.5-2%) seal tank vent	Extrapolated from EP Code 152
155	H	Digesters	batch relief gases	Assumed the same as EP Code 156
156	H	Digesters	continuous relief gases	Site 4 (WW1)

TABLE B-7. EMISSIONS SOURCES AND DATA FACTORS (CONTINUED)

EP Code	Wood Type	Mill Process	Emission Point Description	Basis for Emission Factor
157	S	NCG System	batch turpentine condenser	Assumed the same as EP Code 158
158	S	NCG System	cont. turpentine condenser	Site 3 (WW3)
159	S	Tall Oil Recovery	batch vent	Reference 8
160	S	Tall Oil Recovery	continuous vent	Reference 8
161	S	NCG System	turpentine condensates	Site 3 (WW3), Site 1 (WW3)
162	S	NCG System	turpentine condensates (IMP)	Assumed the same as EP Code 161
163	H	Digesters	batch blow condensates	Site 1 (WW1, HP1)
164	S	Digesters	batch blow condensates	Site 2 (WW4, SP1), Site 3 (WW2A)
165	H	Digesters	batch blow gases	Extrapolated from EP Code 177
166	S	Digesters	batch blow gases	Site 3 (WW24, SP1)
167	H	Digesters	continuous blow gases I	Site 4 (HP1)
168	S	Digesters	continuous blow gases I	Ratioed from EP Code 167
169	H	Digesters	continuous blow gases ND	Ratioed from EP Code 170
170	S	Digesters	continuous blow gases ND	Site 1 (SP2, SP1), Site 3 (WW2B)
171	H	Digesters	continuous blow condensates I	Assumed the same as EP Code 173
172	S	Digesters	continuous blow condensates I	Assumed the same as EP Code 174
173	H	Digesters	continuous blow condensates ND	Site 4 (WW1)

TABLE B-7. EMISSIONS SOURCES AND DATA FACTORS (CONTINUED)

EP Code	Wood Type	Mill Process	Emission Point Description	Basis for Emission Factor
174	S	Digesters	continuous blow condensates ND	Site 3 (WW2b)
175	H	Knotters	hood vent	Extrapolated from EP Code 177
176	S	Knotters	hood vent	Extrapolated from EP Code 178
177	H	Washers	hood vent	Site 4 (HV1, HP3, HP6, HP4), Site 1 (HP1)
178	S	Washers	hood vent	Site 4 (SV1, SP1, SP2, SP3, SP4)
181	H	Washers	deckers/screens	Extrapolated from EP Code 177
182	S	Washers	deckers/screens	Extrapolated from EP Code 178
183	S	Washers	foam tank	Site 2 (P4), Site 4 (SP2)
184	H	Washers	foam tank	Extrapolated from EP Code 178
185	H	Evaporators	vent	Site 4 (WW2)
186	S	Evaporators	vent	Site 5 (WW2, DG)
187	H	Evaporators	condensates	Site 1 (WW2), Site 4 (WW2)
188	S	Evaporators	condensates	Site 3 (WW4, WW7), Site 5 (WW2, DG)
189	H	Evaporators	surface cond. condensates	Site 4 (WW3)
190	S	Evaporators	surface cond. condensates	Ratioed from EP Code 189
191	H	Oxygen Delig.	blow tank	Extrapolated from EP Code 193
192	S	Oxygen Delig.	blow tank	Site 1 (SV1, SP4)

TABLE B-7. EMISSIONS SOURCES AND DATA FACTORS (CONTINUED)

EP Code	Wood Type	Mill Process	Emission Point Description	Basis for Emission Factor
193	H	Oxygen Delig.	washer tank vent	Ratioed from EP Code 194
194	S	Oxygen Delig.	washer tank vent	Site 1 (SP4, SP5)
197	H		weak black liquor storage tank	Site 4 (HP2, HP4), Site 1 (HP1)
198	S		weak black liquor storage tank	Site 3 (SP3, SP10), Site 1 (SP2), Site 4 (SP6)
199	H	Sulfite Digesters	batch relief gases	Extrapolated from EP Code 206
200	S	Sulfite Digesters	batch relief gases	Extrapolated from EP Code 207
201	H	Sulfite Digesters	batch blow gases	Extrapolated from EP Code 206
202	S	Sulfite Digesters	batch blow gases	Extrapolated from EP Code 207
203	H	Sulfite Evaporators	multi effect evap. vent	Assumed the same as EP Code 185
204	S	Sulfite Evaporators	multi effect evap. vent	Assumed the same as EP Code 186
205	S	Sulfite NCG System	turpentine condenser	Assumed the same as EP Code 158
206	H	Sulfite Washer	hood vent	Ratioed from EP Code 207
207	S	Sulfite Washer	hood vent	Site 5 (PI DG)
210	H	Sulfite Washer	decker vent	Extrapolated from EP Code 206
211	S	Sulfite Washer	decker vent	Extrapolated from EP Code 207
212	H	Sulfite Digesters	blow condensates	Ratioed from EP Code 213

TABLE B-7. EMISSIONS SOURCES AND DATA FACTORS (CONTINUED)

EP Code	Wood Type	Mill Process	Emission Point Description	Basis for Emission Factor
213	S	Sulfite Digesters	blow condensates	Site 5 (P1 DG)
214	H	Sulfite Washer	waste liquor	Not used in Model Plants
215	S	Sulfite Washer	waste liquor	Not used in Model Plants
216	H	Sulfite	weak black liquor storage tank	Ratioed from EP Code 217
217	S	Sulfite	weak black liquor storage tank	Site 5 (P2 DG)
218	H	Sulfite Oxygen Delig.	blow tank	Extrapolated from EP Code 220
219	S	Sulfite Oxygen Delig.	blow tank	Assumed the same as EP Code 192
220	H	Sulfite Oxygen Delig.	washer tank vent	Ratioed from EP Code 221
221	S	Sulfite Oxygen Delig.	washer tank vent	Site 5 (P4 DG)
228	H	Sulfite Washer	foam tank vent	Extrapolated from EP Code 220
229	S	Sulfite Washer	foam tank vent	Extrapolated from EP Code 221
230	H	Sulfite Washer	improved washer vent I	Ratioed from EP Code 231
231	S	Sulfite Washer	improved washer vent I	Site 3 (SP2)
232	H	Washers	improved washer vent I	Ratioed from EP Code 233
233	S	Washers	improved washer vent I	Site 1 (SP1, SP3)
234	S	Bleaching	scrubber effluent	Site 3 (WW1), Site 1 (WW6)

TABLE B-7. EMISSIONS SOURCES AND DATA FACTORS (CONTINUED)

EP Code	Wood Type	Mill Process	Emission Point Description	Basis for Emission Factor
235	S	Kraft	covered weak black liquor tank	Site 1 (SP2), Site 4 (SP2), Site 3 (SP3, SP10)
236	H	Kraft	covered weak black liquor tank	Site 1 (HP1), SIte 4 (HP2)
237	S	Sulfite	covered weak black liquor tank	Site 5 (P2 DG)
301	H	Bleaching	E2-stage (low) tower vent	Reference 8
302	S	Bleaching	E2-stage (low) tower vent	Reference 8
303	H	Bleaching	E2-stage (low) washer vent	Reference 8
304	S	Bleaching	E2-stage (low) washer vent	Reference 8
305	H	Bleaching	E2-stage (low) seal tank vent	Reference 8
306	S	Bleaching	E2-stage (low) seal tank vent	Reference 8
307	H	Bleaching	E2-stage (high) tower vent	Reference 8
308	S	Bleaching	E2-stage (high) tower vent	Reference 8
309	H	Bleaching	E2-stage (high) washer vent	Reference 8
310	S	Bleaching	E2-stage (high) washer vent	Reference 8
311	H	Bleaching	E2-stage (high) seal tank vent	Reference 8
312	S	Bleaching	E2-stage (high) seal tank vent	Reference 8
313	H	Bleaching	E2-stage (100%) tower vent	Reference 8

TABLE B-7. EMISSIONS SOURCES AND DATA FACTORS (CONTINUED)

EP Code	Wood Type	Mill Process	Emission Point Description	Basis for Emission Factor
314	S	Bleaching	E2-stage (100%) tower vent	Reference 8
315	H	Bleaching	E2-stage (100%) washer vent	Reference 8
316	S	Bleaching	E2-stage (100%) washer vent	Reference 8
317	H	Bleaching	E2-stage (100%) seal tank vent	Reference 8
318	S	Bleaching	E2-stage (100%) seal tank vent	Reference 8
401	H	Oxygen Delig.	blow tank	Reference 9
402	S	Oxygen Delig.	blow tank	Reference 9
403	H	Oxygen Delig.	washer tank vent	Reference 9
404	S	Oxygen Delig.	washer tank vent	Reference 9
405	H	Bleaching	EOP-stage (100%) tower vent	Reference 9
406	S	Bleaching	EOP-stage (100%) tower vent	Reference 9
407	H	Bleaching	EOP-stage (100%) seal tank vent	Reference 9
408	S	Bleaching	EOP-stage (100%) washer vent	Reference 9
409	H	Bleaching	EOP-stage (100%) washer vent	Reference 9
410	S	Bleaching	EOP-stage (100%) seal tank vent	Reference 9

DG = Disolving grade; H = Hardwood; S = Softwood

[a] Emission factors were extrapolated based on estimated relative emissions from each unit in a series of processing units.

[b] Emission factor were estimated based on the hardwood/softwood ratio.

estimate emissions for other situations where data were available for some units in the series but not for all units. This latter set of factors was developed using analytical emission models developed under other EPA programs.[10] A complete discussion of the development of these ratios and factors can be found in a separate document.[11]

The Agency recognizes the shortcomings associated with emission factor determinations by methods other than direct vent measurements. Consequently, when vent measurement data were identified for an emission point, those data were weighted heavily in the determination of an emission factor for that emission point. When no vent measurement data were found, estimated values based on the procedures described above were used instead. Additional measurement data are currently being collected for emission points associated with pulp and paper manufacturing. The list of emission factors presented here will be updated in the future when warranted by new data.

B.12 EMISSION FACTORS

This section presents a listing of emission factors developed for a group of individual constituents at pulp and paper mills using procedures described previously in this document, and as detailed in a separate summary document.[12] Separate emission factors are presented in Table B-8 for each emission source listed in Table B-7.

TABLE B-8. EMISSION FACTORS FOR INDIVIDUAL SOURCES AND COMPOUNDS (g/Mg pulp)

Compound Names	EP Codes					
	3	4	7	8	19	20
Acetone	0.14272	0.03659	70	70	0.01317	1
Methanol	28.73723	2.07739	50	50	6.30142	0.49
Carbon tetrachloride	0.3	0	0	0	0	0
Methyl ethyl ketone	0.24772	0.10322	25	25	0.0258	1.4
Hydrogen Sulfide	0	0	0	0	0	0
Methyl mercaptan	0	0	0	0	0	0
Dimethyl sulfide	0	0	0	0	0	0
Dimethyl disulfide	0	0	0	0	0	0
Alpha pinene	0	0	0	0	0	0.02
Hydro Chloric Acid	0	0	0	0	0.1048	0
Chlorine	210	210	0	0	10	10
Chlorine dioxide	105	0	0	0	1.95	0
Methyl chloride	0.32967	0.35834	3	3	5.01671	20
Chloroform	11.3	10	5.28889	5.03313	40	50
1 Benz	0	0	0	0	0	0
Phenol	0	0	0	0	0	0
Dioxin	0	0	0	0	0	0
Furan	0	0	0	0	0	0
1,1,1-Trichloroetane	0	0.1	0	0	0	0
2,4,5-Trichlorophenol	0	0	0.3	0.3	0	0
PCP-EF	0	0	1.75	1.7	0	0
2,4,6-Trichlorophenol	0	0	0	0	0	0
Chlorophenol	0	0	10	10	0	0
Beta Pinene	0	0	0	0	0	0
Alpha Terpinol	0	0	0	0	0	0
Acrolein	0.68891	0.00177	2	2	0.02385	0.02
Acetaldehyde	0	0.01731	6	6	0.02077	0.13
Propionaldehyde	0	0.00812	16	16	0.08122	0.38
DACETON-EF	0	0.03718	0	0	0.00372	0.01
Toluene	0	0.6	0	0	0.25	2.1
Hexane	0	0	0	0	0	0
Chloromethane	0	0.5	0	0	0	0
p-Cymene	0	0	0	0	2	0
p-Dichlorobenzene	0	0	0	0	0	0
Formaldehyde	0	0.03071	12	12	0.07677	3
Acetophenol	0	0	0	0	0	0
Dimethyltrisulfide	0	0	0	0	0	0
Carbon disulfide	0	0	0	0	0	0
Total HC	0	0	0	0	6.74112	60
Other	41.60353	13.79686	119.5889	119.3331	51.79654	77.52
Total HAP	251.6035	223.7969	119.5889	119.3331	61.90134	87.52
Total VOC	41.41658	13.41229	198.3389	198.0331	55.53784	118.55
TRS	0	0	0	0	0	0

TABLE B-8. EMISSION FACTORS FOR INDIVIDUAL SOURCES AND COMPOUNDS (g/Mg pulp) (CONTINUED)

Compound Names	EP Codes					
	39	40	41	42	45	46
Acetone	70	70	67	67	0.14272	0.03659
Methanol	50	50	100	100	28.73723	2.07739
Carbon tetrachloride	0	0	0	0	0.3	0
Methyl ethyl ketone	25	25	20	20	0.24772	0.10322
Hydrogen Sulfide	0	0	0	0	0	0
Methyl mercaptan	0	0	0	0	0	0
Dimethyl sulfide	0	0	0	0	0	0
Dimethyl disulfide	0	0	0	0	0	0
Alpha pinene	0	0	0	0	0	0
Hydro Chloric Acid	0	0	0	0	0	0
Chlorine	0	0	0	0	210	210
Chlorine dioxide	0	0	0	0	105	0
Methyl chloride	3	3	3	3	0.32967	0.35834
Chloroform	5.28889	5.03313	1.41742	2.29962	5.27414	6.20716
1 Benz	0	0	0	0	0	0
Phenol	0	0	0	0	0	0
Dioxin	0	0	0	0	0	0
Furan	0	0	0	0	0	0
1,1,1-Trichloroetane	0	0	0	0	0	0.1
2,4,5-Trichlorophenol	0.37	0.37	0	0	0	0
PCP-EF	1.75	1.75	0	0	0	0
2,4,6-Trichlorophenol	0	0	0	0	0	0
Chlorophenol	10	10	0	0	0	0
Beta Pinene	0	0	0	0	0	0
Alpha Terpinol	0	0	0	0	0	0
Acrolein	2	2	1	1	0.68891	0.00177
Acetaldehyde	6	6	1.4	1.4	0	0.01731
Propionaldehyde	16	16	1.2	1.2	0	0.00812
DACETON-EF	0	0	0	0	0	0.03718
Toluene	0	0	0.002	0.002	0	0.6
Hexane	0	0	0	0	0	0
Chloromethane	0	0	0	0	0	0.5
p-Cymene	0	0	0	0	0	0
p-Dichlorobenzene	0	0	0	0	0	0
Formaldehyde	12	12	9	9	0	0.03071
Acetophenol	0	0	0	0	0	0
Dimethyltrisulfide	0	0	0	0	0	0
Carbon disulfide	0	0	0	0	0	0
Total HC	0	0	0	0	0	0
Other	119.6589	119.4031	137.0194	137.9016	35.57767	10.00402
Total HAP	119.6589	119.4031	137.0194	137.9016	245.5777	220.004
Total VOC	198.4089	198.1531	201.0194	201.9016	35.39072	9.61945
TRS	0	0	0	0	0	0

TABLE B-8. EMISSION FACTORS FOR INDIVIDUAL SOURCES AND COMPOUNDS (g/Mg pulp) (CONTINUED)

Compound Names	EP Codes					
	47	48	49	50	53	54
Acetone	2.7	2.7	3.5	3.5	0.07319	0.0022
Methanol	500	500	300	300	7.6171	0.62322
Carbon tetrachloride	0	0	0	0	0.29	0.3
Methyl ethyl ketone	2	2	0.7	0.7	0.72253	0.00103
Hydrogen Sulfide	0	0	0	0	0	0
Methyl mercaptan	0	0	0	0	0	0
Dimethyl sulfide	0	0	0	0	0	0
Dimethyl disulfide	0	0	0	0	0	0
Alpha pinene	0	0	0	0	0	0
Hydro Chloric Acid	0	0	0	0	0.01344	0.02015
Chlorine	0	0	0	0	50	50
Chlorine dioxide	0	0	0	0	105	125
Methyl chloride	6	6	3.3	3.3	0.50167	0.14333
Chloroform	0.89839	0.80657	0.24077	0.36852	0.85725	1.93089
1 Benz	0	0	0	0	0	0
Phenol	0	0	0	0	0	0
Dioxin	0	0	0	0	0	0
Furan	0	0	0	0	0	0
1,1,1-Trichloroetane	0	0	0	0	0.3	0
2,4,5-Trichlorophenol	0.37	0.37	0	0	0	0
PCP-EF	1.75	1.75	0	0	0	0
2,4,6-Trichlorophenol	0	0	0	0	0	0
Chlorophenol	1	1	0	0	0	0
Beta Pinene	0	0	0	0	0	0
Alpha Terpinol	0	0	0	0	0	0
Acrolein	0.2	0.2	0.16	0.16	0.04416	0.00128
Acetaldehyde	0.7	0.7	3	3	0.11249	0
Propionaldehyde	1.1	1.1	0.6	0.6	0	0.00002
DACETON-EF	0	0	0	0	0.07436	0
Toluene	0.00003	0.00003	0.00006	0.00006	0.06	0.06
Hexane	0	0	0	0	0	0
Chloromethane	0.0025	0.0025	0	0	1.8	0.5
p-Cymene	0	0	0	0	8	0
p-Dichlorobenzene	0	0	0	0	0.3	0.3
Formaldehyde	9	9	6	6	0.29942	0
Acetophenol	0	0	0	0	0	0
Dimethyltrisulfide	0	0	0	0	0	0
Carbon disulfide	0	0	0	0	0	0
Total HC	0	0	0	0	0	0
Other	520.2709	520.1791	314.0008	314.1286	12.90462	3.85977
Total HAP	520.2709	520.1791	314.0008	314.1286	62.91806	53.87992
Total VOC	519.7209	519.6291	314.2008	314.3286	20.2505	3.71864
TRS	0	0	0	0	0	0

TABLE B-8. EMISSION FACTORS FOR INDIVIDUAL SOURCES AND COMPOUNDS (g/Mg pulp) (CONTINUED)

Compound Names	EP Codes					
	55	56	57	58	61	62
Acetone	2.7	2.7	3.5	3.5	0.07319	0.0022
Methanol	500	500	300	300	7.6171	0.62322
Carbon tetrachloride	0	0	0	0	0.29	0.3
Methyl ethyl ketone	2	2	0.7	0.7	0.72253	0.00103
Hydrogen Sulfide	0	0	0	0	0	0
Methyl mercaptan	0	0	0	0	0	0
Dimethyl sulfide	0	0	0	0	0	0
Dimethyl disulfide	0	0	0	0	0	0
Alpha pinene	0	0	0	0	0	0
Hydro Chloric Acid	0	0	0	0	0.01344	0.02015
Chlorine	0	0	0	0	50	50
Chlorine dioxide	0	0	0	0	105	125
Methyl chloride	6	6	3.3	3.3	0.50167	0.14333
Chloroform	2.21554	1.96125	0.59376	0.89609	1.16536	1.93089
1 Benz	0	0	0	0	0	0
Phenol	0	0	0	0	0	0
Dioxin	0	0	0	0	0	0
Furan	0	0	0	0	0	0
1,1,1-Trichloroetane	0	0	0	0	0.3	0
2,4,5-Trichlorophenol	3.7	0.37	0	0	0	0
PCP-EF	1.75	1.75	0	0	0	0
2,4,6-Trichlorophenol	0	0	0	0	0	0
Chlorophenol	8	8	0	0	0	0
Beta Pinene	0	0	0	0	0	0
Alpha Terpinol	0	0	0	0	0	0
Acrolein	0.2	0.2	0.16	0.16	0.04416	0.00128
Acetaldehyde	0.7	0.7	3	3	0.11249	0
Propionaldehyde	1.1	1.1	0.6	0.6	0	0.00002
DACETON-EF	0	0	0	0	0.07436	0
Toluene	0.00003	0.00003	0.00006	0.00006	0.06	0.06
Hexane	0	0	0	0	0	0
Chloromethane	0.0025	0.0025	0	0	1.8	0.5
p-Cymene	0	0	0	0	8	0
p-Dichlorobenzene	0	0	0	0	0.3	0.3
Formaldehyde	9	9	6	6	0.29942	0
Acetophenol	0	0	0	0	0	0
Dimethyltrisulfide	0	0	0	0	0	0
Carbon disulfide	0	0	0	0	0	0
Total HC	0	0	0	0	0	0
Other	524.9181	521.3338	314.3538	314.6562	13.21273	3.85977
Total HAP	524.9181	521.3338	314.3538	314.6562	63.22617	53.87992
Total VOC	531.3681	527.7838	314.5538	314.8562	20.55861	3.71864
TRS	0	0	0	0	0	0

TABLE B-8. EMISSION FACTORS FOR INDIVIDUAL SOURCES AND COMPOUNDS (g/Mg pulp) (CONTINUED)

Compound Names	EP Codes					
	63	64	65	66	69	70
Acetone	2.2	1	2	1	0.14272	0.03659
Methanol	460	200	100	30	28.73723	2.07739
Carbon tetrachloride	0	0	0	0	0.3	0
Methyl ethyl ketone	7	3	10	2	0.24772	0.10322
Hydrogen Sulfide	0	0	0	0	0	0
Methyl mercaptan	0	0	0	0	0	0
Dimethyl sulfide	0	0	0	0	0	0
Dimethyl disulfide	0	0	0	0	0	0
Alpha pinene	0	0	0	0	0	0
Hydro Chloric Acid	0	0	0	0	0	0
Chlorine	0	0	0	0	210	210
Chlorine dioxide	0	0	0	0	105	0
Methyl chloride	3	3	0.03	3	0.32967	0.35834
Chloroform	4.09718	3.79904	1.09805	1.73577	5.27414	4.31903
1 Benz	0	0	0	0	0	0
Phenol	0	0	0	0	0	0
Dioxin	0	0	0	0	0	0
Furan	0	0	0	0	0	0
1,1,1-Trichloroetane	0	0.0002	0	0.002	0	0.1
2,4,5-Trichlorophenol	0.37	0.37	0	0	0	0
PCP-EF	1.75	1.75	0	0	0	0
2,4,6-Trichlorophenol	0	0	0	0	0	0
Chlorophenol	10	10	0	0	0	0
Beta Pinene	0	0	0	0	0	0
Alpha Terpinol	0	0	0	0	0	0
Acrolein	2.5	0.05	0.14	0.1	0.68891	0.00177
Acetaldehyde	1.2	0.2	2.3	1	0	0.01731
Propionaldehyde	0.5	0.3	0.08	0.8	0	0.00812
DACETON-EF	0	0.06	0	0	0	0.03718
Toluene	0	0.003	0	0.001	0	0.6
Hexane	0	0	0	0	0	0
Chloromethane	0	0.03	0	0	0	0.5
p-Cymene	0	0	0	0	0	0
p-Dichlorobenzene	0	0	0	0	0	0
Formaldehyde	8.1	1	15	3.4	0	0.03071
Acetophenol	0	0	0	0	0	0
Dimethyltrisulfide	0	0	0	0	0	0
Carbon disulfide	0	0	0	0	0	0
Total HC	0	0	0	0	0	0
Other	486.7672	211.7522	128.6481	42.03877	35.57767	8.11589
Total HAP	486.7672	211.7522	128.6481	42.03877	245.5777	218.1159
Total VOC	497.7172	221.562	130.6181	40.03677	35.39072	7.73132
TRS	0	0	0	0	0	0

TABLE B-8. EMISSION FACTORS FOR INDIVIDUAL SOURCES AND COMPOUNDS (g/Mg pulp) (CONTINUED)

Compound Names	EP Codes					
	71	72	73	74	75	76
Acetone	1.95	0.5	1.40091	0.35921	1.95	0.5
Methanol	415	30	311.2622	22.50088	415	30
Carbon tetrachloride	0.3	0	0.00266	0	0.3	0
Methyl ethyl ketone	2.4	1	1.30507	0.54378	2.4	1
Hydrogen Sulfide	0	0	0	0	0	0
Methyl mercaptan	0	0	0	0	0	0
Dimethyl sulfide	0	0	0	0	0	0
Dimethyl disulfide	0	0	0	0	0	0
Alpha pinene	0	0	0	0	0	0
Hydro Chloric Acid	0	0	0	0	0	0
Chlorine	210	210	5.32471	5.324	210	210
Chlorine dioxide	105	0	2.66236	0	105	0
Methyl chloride	0.46	0.5	0.04193	0.04558	0.46	0.5
Chloroform	11.3	10	0.72566	0.64217	5.27414	6.20716
1 Benz	0	0	0	0	0	0
Phenol	0	0	0	0	0	0
Dioxin	0	0	0	0	0	0
Furan	0	0	0	0	0	0
1,1,1-Trichloroetane	0	0.1	0	0.00139	0	0.1
2,4,5-Trichlorophenol	0	0	0	0	0	0
PCP-EF	0	0	0	0	0	0
2,4,6-Trichlorophenol	0	0	0	0	0	0
Chlorophenol	0	0	0	0	0	0
Beta Pinene	0	0	0	0	0	0
Alpha Terpinol	0	0	0	0	0	0
Acrolein	7.8	0.02	4.82303	0.01237	7.8	0.02
Acetaldehyde	0	0.2	0	0.12574	0	0.2
Propionaldehyde	0	0.1	0	0.06616	0	0.1
DACETON-EF	0	0.2	0	0.06515	0	0.2
Toluene	0	0.6	0	0.01923	0	0.6
Hexane	0	0	0	0	0	0
Chloromethane	0	0.5	0	0.02273	0	0.5
p-Cymene	0	0	0	0	0	0
p-Dichlorobenzene	0	0	0	0	0	0
Formaldehyde	0	0.4	0	0.27675	0	0.4
Acetophenol	0	0	0	0	0	0
Dimethyltrisulfide	0	0	0	0	0	0
Carbon disulfide	0	0	0	0	0	0
Total HC	0	0	0	0	0	0
Other	437.26	43.42	318.1605	24.25678	431.2341	39.62716
Total HAP	647.26	253.42	323.4852	29.58078	641.2341	249.6272
Total VOC	438.75	43.52	319.5195	24.63417	432.7241	39.72716
TRS	0	0	0	0	0	0

TABLE B-8. EMISSION FACTORS FOR INDIVIDUAL SOURCES AND COMPOUNDS (g/Mg pulp) (CONTINUED)

Compound Names	EP Codes					
	77	78	79	80	81	82
Acetone	0.35921	1.40091	1	0.03	0.71842	0.02155
Methanol	311.2622	22.50088	110	9	82.50323	6.75026
Carbon tetrachloride	0	0.00266	0.29	0.3	0.00257	0.00266
Methyl ethyl ketone	0.54378	1.30507	7	0.01	3.80647	0.00544
Hydrogen Sulfide	0	0	0	0	0	0
Methyl mercaptan	0	0	0	0	0	0
Dimethyl sulfide	0	0	0	0	0	0
Dimethyl disulfide	0	0	0	0	0	0
Alpha pinene	0	0	0	0	0	0
Hydro Chloric Acid	0	0	0.2	0.3	0.15355	0.23033
Chlorine	5.324	5.32471	50	50	1.268	1.26779
Chlorine dioxide	0	2.66236	105	125	2.66236	3.16947
Methyl chloride	0.04133	0.04558	0.7	0.2	0.06381	0.01823
Chloroform	0.39861	0.33869	0.85725	1.93089	0.05505	0.124
1 Benz	0	0	0	0	0	0
Phenol	0	0	0	0	0	0
Dioxin	0	0	0	0	0	0
Furan	0	0	0	0	0	0
1,1,1-Trichloroetane	0.00139	0	0.3	0	0.00417	0
2,4,5-Trichlorophenol	0	0	0	0	0	0
PCP-EF	0	0	0	0	0	0
2,4,6-Trichlorophenol	0	0	0	0	0	0
Chlorophenol	0	0	0	0	0	0
Beta Pinene	0	0	0	0	0	0
Alpha Terpinol	0	0	0	0	0	0
Acrolein	4.82303	0.01237	0.5	0.00128	0.30917	0.00128
Acetaldehyde	0.12574	0	1.3	0	0.81734	0
Propionaldehyde	0.06616	0	0	0.0003	0	0.0002
DACETON-EF	0.06515	0	0.4	0	0.1303	0
Toluene	0.01923	0	0.06	0.06	0.00192	0.00192
Hexane	0	0	0	0	0	0
Chloromethane	0.02273	0	1.8	0.5	0.08181	0.02273
p-Cymene	0	0	8	0	0.06678	0
p-Dichlorobenzene	0	0	0.3	0.3	0.01223	0.01223
Formaldehyde	0.27675	0	3.9	0	2.69835	0
Acetophenol	0	0	0	0	0	0
Dimethyltrisulfide	0	0	0	0	0	0
Carbon disulfide	0	0	0	0	0	0
Total HC	0	0	0	0	0	0
Other	317.5809	24.20525	127.0073	12.30247	90.35612	6.93895
Total HAP	322.9049	29.52996	177.2073	62.60247	91.77767	8.43707
Total VOC	3179626	25.56058	135.4073	12.13247	91.20364	6.94227
TRS	0	0	0	0	0	0

TABLE B-8. EMISSION FACTORS FOR INDIVIDUAL SOURCES AND COMPOUNDS (g/Mg pulp) (CONTINUED)

Compound Names	EP Codes					
	83	84	85	86	87	88
Acetone	1	0.03	0.71842	0.02155	1.95	0.5
Methanol	110	9	82.50323	6.75026	415	30
Carbon tetrachloride	0.29	0.3	0.00257	0.00266	0.3	0
Methyl ethyl ketone	7	0.01	3.80647	0.00544	2.4	1
Hydrogen Sulfide	0	0	0	0	0	0
Methyl mercaptan	0	0	0	0	0	0
Dimethyl sulfide	0	0	0	0	0	0
Dimethyl disulfide	0	0	0	0	0	0
Alpha pinene	0	0	0	0	0	0
Hydro Chloric Acid	0.2	0.3	0.15355	0.23033	0	0
Chlorine	50	50	1.268	1.26779	210	210
Chlorine dioxide	105	125	2.66236	3.16947	105	0
Methyl chloride	0.7	0.2	0.06381	0.01823	0.46	0.5
Chloroform	1.16536	1.93089	0.07484	0.124	5.27414	4.31903
1 Benz	0	0	0	0	0	0
Phenol	0	0	0	0	0	0
Dioxin	0	0	0	0	0	0
Furan	0	0	0	0	0	0
1,1,1-Trichloroetane	0.3	0	0.00417	0	0	0.1
2,4,5-Trichlorophenol	0	0	0	0	0	0
PCP-EF	0	0	0	0	0	0
2,4,6-Trichlorophenol	0	0	0	0	0	0
Chlorophenol	0	0	0	0	0	0
Beta Pinene	0	0	0	0	0	0
Alpha Terpinol	0	0	0	0	0	0
Acrolein	0.5	0.00128	0.30917	0.00128	7.8	0.02
Acetaldehyde	1.3	0	0.81734	0	0	0.2
Propionaldehyde	0	0.0003	0	0.0002	0	0.1
DACETON-EF	0.4	0	0.1303	0	0	0.2
Toluene	0.06	0.06	0.00192	0.00192	0	0.6
Hexane	0	0	0	0	0	0
Chloromethane	1.8	0.5	0.08181	0.02273	0	0.5
p-Cymene	8	0	0.06678	0	0	0
p-Dichlorobenzene	0.3	0.3	0.01223	0.01223	0	0
Formaldehyde	3.9	0	2.69835	0	0	0.4
Acetophenol	0	0	0	0	0	0
Dimethyltrisulfide	0	0	0	0	0	0
Carbon disulfide	0	0	0	0	0	0
Total HC	0	0	0	0	0	0
Other	127.3154	12.30247	90.37591	6.93895	431.2341	37.73903
Total HAP	177.5154	62.60247	91.79746	8.43707	641.2341	247.739
Total VOC	135.7154	12.13247	91.22343	6.94227	432.7241	37.83903
TRS	0	0	0	0	0	0

TABLE B-8. EMISSION FACTORS FOR INDIVIDUAL SOURCES AND COMPOUNDS (g/Mg pulp) (CONTINUED)

Compound Names	EP Codes					
	89	90	91	92	93	94
Acetone	1.40091	0.35921	2.19563	2.19563	30	30
Methanol	311.2622	22.50088	0.48472	0.48472	7	7
Carbon tetrachloride	0.00266	0	0	0	0	0
Methyl ethyl ketone	1.30507	0.54378	3.09655	3.09655	30	30
Hydrogen Sulfide	0	0	0	0	0	0
Methyl mercaptan	0	0	0	0	0	0
Dimethyl sulfide	0	0	0	0	0	0
Dimethyl disulfide	0	0	0	0	0	0
Alpha pinene	0	0	0.13	0.13	0.13	0.13
Hydro Chloric Acid	0	0	0.02687	0.02687	0.4	0.4
Chlorine	5.32471	5.324	3	3	3	3
Chlorine dioxide	2.66236	0	3	3	3	3
Methyl chloride	0.04193	0.04558	3.58337	3.58337	5	5
Chloroform	0.34738	0.27736	7.93455	10.55217	7.93455	10.55217
1 Benz	0	0	0	0	0	0
Phenol	0	0	0	0	0	0
Dioxin	0	0	0	0	0	0
Furan	0	0	0	0	0	0
1,1,1-Trichloroetane	0	0.00139	0.3	0.3	0.3	0.3
2,4,5-Trichlorophenol	0	0	0	0	0	0
PCP-EF	0	0	0	0	0	0
2,4,6-Trichlorophenol	0	0	0	0	0	0
Chlorophenol	0	0	0	0	0	0
Beta Pinene	0	0	0.01885	0.01885	0.02	0.02
Alpha Terpinol	0	0	0	0	0	0
Acrolein	4.82303	0.01237	0.17664	0.17664	2	2
Acetaldehyde	0	0.12574	0	0	0	0
Propionaldehyde	0	0.06616	0.08122	0.08122	1	1
DACETON-EF	0	0.06515	0	0	0	0
Toluene	0	0.01923	5	5	5	5
Hexane	0	0	0	0	0	0
Chloromethane	0	0.02273	0	0	0	0
p-Cymene	0	0	1	1	1	1
p-Dichlorobenzene	0	0	0	0	0	0
Formaldehyde	0	0.27675	0.00384	0.00384	0.05	0.05
Acetophenol	0	0	0	0	0	0
Dimethyltrisulfide	0	0	0	0	0	0
Carbon disulfide	0	0	0	0	0	0
Total HC	0	0	1.54968	1.54968	4	4
Other	317.7823	23.89197	20.66089	23.27851	58.28455	60.90217
Total HAP	323.107	29.21597	23.68776	26.30538	61.68455	64.30217
Total VOC	319.1412	24.26936	21.67168	24.2893	88.13455	90.75217
TRS	0	0	0	0	0	0

TABLE B-8. EMISSION FACTORS FOR INDIVIDUAL SOURCES AND COMPOUNDS (g/Mg pulp) (CONTINUED)

Compound Names	EP Codes					
	95	96	97	98	99	100
Acetone	21.55246	21.55246	6.22096	6.22096	85	85
Methanol	5.25021	5.25021	5.40121	5.40121	78	78
Carbon tetrachloride	0	0	0	0	0	0
Methyl ethyl ketone	16.31342	16.31342	6.50274	6.50274	63	63
Hydrogen Sulfide	0	0	0	0	0	0
Methyl mercaptan	0	0	0	0	0	0
Dimethyl sulfide	0	0	0	0	0	0
Dimethyl disulfide	0	0	0	0	0	0
Alpha pinene	0.00687	0.00687	0	0	0	0
Hydro Chloric Acid	0.3071	0.3071	0	0	0	0
Chlorine	0.07607	0.07607	0	0	0	0
Chlorine dioxide	0.07607	0.07607	0	0	0	0
Methyl chloride	0.45576	0.45576	4.58671	4.58671	6.4	6.4
Chloroform	0.50954	0.67763	3.95654	2.89633	3.95654	2.89633
1 Benz	0	0	0	0	0	0
Phenol	0	0	0	0	0	0
Dioxin	0	0	0	0	0	0
Furan	0	0	0	0	0	0
1,1,1-Trichloroetane	0.00417	0.00417	0	0	0	0
2,4,5-Trichlorophenol	0	0	0	0	0	0
PCP-EF	0	0	0	0	0	0
2,4,6-Trichlorophenol	0	0	0	0	0	0
Chlorophenol	0	0	0	0	0	0
Beta Pinene	0.0014	0.0014	0	0	0	0
Alpha Terpinol	0	0	0	0	0	0
Acrolein	1.23667	1.23667	0.18548	0.18548	2.1	2.1
Acetaldehyde	0	0	0.18171	0.18171	2.1	2.1
Propionaldehyde	0.66156	0.66156	0.09747	0.09747	1.2	1.2
DACETON-EF	0	0	0	0	0	0
Toluene	0.16025	0.16025	6	6	6	6
Hexane	0	0	0	0	0	0
Chloromethane	0	0	0	0	0	0
p-Cymene	0.00835	0.00835	1	1	1	1
p-Dichlorobenzene	0	0	0	0	0	0
Formaldehyde	0.03459	0.03459	0.4069	0.4069	5.3	5.3
Acetophenol	0	0	0	0	0	0
Dimethyltrisulfide	0	0	0	0	0	0
Carbon disulfide	0	0	0	0	0	0
Total HC	0.65903	0.65903	0	0	0	0
Other	24.62617	24.79426	27.31876	26.25855	168.0565	166.9963
Total HAP	25.00934	25.17743	27.31876	26.25855	168.0565	166.9963
Total VOC	46.39435	46.56244	29.95301	28.8928	247.6565	246.5963
TRS	0	0	0	0	0	0

TABLE B-8. EMISSION FACTORS FOR INDIVIDUAL SOURCES AND COMPOUNDS (g/Mg pulp) (CONTINUED)

Compound Names	EP Codes					
	101	102	103	104	105	106
Acetone	61.06531	61.06531	6.22096	6.22096	85	85
Methanol	58.50229	58.50229	5.40121	5.40121	78	78
Carbon tetrachloride	0	0	0	0	0	0
Methyl ethyl ketone	34.25819	34.25819	6.50274	6.50274	63	63
Hydrogen Sulfide	0	0	0	0	0	0
Methyl mercaptan	0	0	0	0	0	0
Dimethyl sulfide	0	0	0	0	0	0
Dimethyl disulfide	0	0	0	0	0	0
Alpha pinene	0	0	0	0	0	0
Hydro Chloric Acid	0	0	0	0	0	0
Chlorine	0	0	0	0	0	0
Chlorine dioxide	0	0	0	0	0	0
Methyl chloride	0.58337	0.58337	4.58671	4.58671	6.4	6.4
Chloroform	0.25408	0.18599	3.95654	2.89633	3.95654	2.89633
1 Benz	0	0	0	0	0	0
Phenol	0	0	0	0	0	0
Dioxin	0	0	0	0	0	0
Furan	0	0	0	0	0	0
1,1,1-Trichloroetane	0	0	0	0	0	0
2,4,5-Trichlorophenol	0	0	0	0	0	0
PCP-EF	0	0	0	0	0	0
2,4,6-Trichlorophenol	0	0	0	0	0	0
Chlorophenol	0	0	0	0	0	0
Beta Pinene	0	0	0	0	0	0
Alpha Terpinol	0	0	0	0	0	0
Acrolein	1.29851	1.29851	0.18548	0.18548	2.1	2.1
Acetaldehyde	1.32032	1.32032	0.18171	0.18171	2.1	2.1
Propionaldehyde	0.79388	0.79388	0.09747	0.09747	1.2	1.2
DACETON-EF	0	0	0	0	0	0
Toluene	0.1923	0.1923	6	6	6	6
Hexane	0	0	0	0	0	0
Chloromethane	0	0	0	0	0	0
p-Cymene	0.00835	0.00835	1	1	1	1
p-Dichlorobenzene	0	0	0	0	0	0
Formaldehyde	3.66699	3.66699	0.4069	0.4069	5.3	5.3
Acetophenol	0	0	0	0	0	0
Dimethyltrisulfide	0	0	0	0	0	0
Carbon disulfide	0	0	0	0	0	0
Total HC	0	0	0	0	0	0
Other	100.8699	100.8018	27.31876	26.25855	168.0565	166.9963
Total HAP	100.8699	100.8018	27.31876	26.25855	168.0565	166.9963
Total VOC	161.3602	161.2921	29.95301	28.8928	247.6565	246.5963
TRS	0	0	0	0	0	0

TABLE B-8. EMISSION FACTORS FOR INDIVIDUAL SOURCES AND COMPOUNDS (g/Mg pulp) (CONTINUED)

Compound Names	EP Codes					
	107	108	109	110	111	112
Acetone	61.06531	61.06531	2.19563	2.19563	30	30
Methanol	58.50229	58.50229	0.48472	0.48472	7	7
Carbon tetrachloride	0	0	0	0	0	0
Methyl ethyl ketone	34.25819	34.25819	3.09655	3.09655	30	30
Hydrogen Sulfide	0	0	0	0	0	0
Methyl mercaptan	0	0	0	0	0	0
Dimethyl sulfide	0	0	0	0	0	0
Dimethyl disulfide	0	0	0	0	0	0
Alpha pinene	0	0	0.13	0.13	0.13	0.13
Hydro Chloric Acid	0	0	0.02687	0.02687	0.4	0.4
Chlorine	0	0	3	3	3	3
Chlorine dioxide	0	0	3	3	3	3
Methyl chloride	0.58337	0.58337	3.58337	3.58337	5	5
Chloroform	0.25408	0.18599	7.93455	10.55217	7.93455	10.55217
1 Benz	0	0	0	0	0	0
Phenol	0	0	0	0	0	0
Dioxin	0	0	0	0	0	0
Furan	0	0	0	0	0	0
1,1,1-Trichloroetane	0	0	0.3	0.3	0.3	0.3
2,4,5-Trichlorophenol	0	0	0	0	0	0
PCP-EF	0	0	0	0	0	0
2,4,6-Trichlorophenol	0	0	0	0	0	0
Chlorophenol	0	0	0	0	0	0
Beta Pinene	0	0	0.01885	0.01885	0.02	0.02
Alpha Terpinol	0	0	0	0	0	0
Acrolein	1.29851	1.29851	0.17664	0.17664	2	2
Acetaldehyde	1.32032	1.32032	0	0	0	0
Propionaldehyde	0.79388	0.79388	0.08122	0.08122	1	1
DACETON-EF	0	0	0	0	0	0
Toluene	0.1923	0.1923	5	5	5	5
Hexane	0	0	0	0	0	0
Chloromethane	0	0	0	0	0	0
p-Cymene	0.00835	0.00835	1	1	1	1
p-Dichlorobenzene	0	0	0	0	0	0
Formaldehyde	3.66699	3.66699	0.00384	0.00384	0.05	0.05
Acetophenol	0	0	0	0	0	0
Dimethyltrisulfide	0	0	0	0	0	0
Carbon disulfide	0	0	0	0	0	0
Total HC	0	0	1.54968	1.54968	4	4
Other	100.8699	100.8018	20.66089	23.27851	58.28455	60.90217
Total HAP	100.8699	100.8018	23.68776	26.30538	61.68455	64.30217
Total VOC	161.3602	161.2921	21.67168	24.2893	88.13455	90.75217
TRS	0	0	0	0	0	0

TABLE B-8. EMISSION FACTORS FOR INDIVIDUAL SOURCES AND COMPOUNDS (g/Mg pulp) (CONTINUED)

Compound Names	EP Codes					
	113	114	115	116	117	118
Acetone	21.55246	21.55246	0.07319	0.07319	1	1
Methanol	5.25021	5.25021	0.20774	0.20774	3	3
Carbon tetrachloride	0	0	0	0	0	0
Methyl ethyl ketone	16.31342	16.31342	0.30965	0.30965	3	3
Hydrogen Sulfide	0	0	0	0	0	0
Methyl mercaptan	0	0	0	0	0	0
Dimethyl sulfide	0	0	0	0	0	0
Dimethyl disulfide	0	0	0	0	0	0
Alpha pinene	0.00687	0.00687	0	0	0	0
Hydro Chloric Acid	0.3071	0.3071	0	0	0	0
Chlorine	0.07607	0.07607	10	10	10	10
Chlorine dioxide	0.07607	0.07607	40	40	40	40
Methyl chloride	0.45576	0.45576	4.30004	4.30004	6	6
Chloroform	0.50954	0.67763	15.79747	20.48362	15.79747	20.48362
1 Benz	0	0	0	0	0	0
Phenol	0	0	0	0	0	0
Dioxin	0	0	0	0	0	0
Furan	0	0	0	0	0	0
1,1,1-Trichloroetane	0.00417	0.00417	0	0	0	0
2,4,5-Trichlorophenol	0	0	0	0	0	0
PCP-EF	0	0	0	0	0	0
2,4,6-Trichlorophenol	0	0	0	0	0	0
Chlorophenol	0	0	0	0	0	0
Beta Pinene	0.0014	0.0014	0	0	0	0
Alpha Terpinol	0	0	0	0	0	0
Acrolein	1.23667	1.23667	0.04416	0.04416	0.5	0.5
Acetaldehyde	0	0	0.03461	0.03461	0.4	0.4
Propionaldehyde	0.66156	0.66156	0.16245	0.16245	2	2
DACETON-EF	0	0	0	0	0	0
Toluene	0.16025	0.16025	0	0	0	0
Hexane	0	0	0	0	0	0
Chloromethane	0	0	0	0	0	0
p-Cymene	0.00835	0.00835	0	0	0	0
p-Dichlorobenzene	0	0	0	0	0	0
Formaldehyde	0.03459	0.03459	0.92128	0.92128	12	12
Acetophenol	0	0	0	0	0	0
Dimethyltrisulfide	0	0	0	0	0	0
Carbon disulfide	0	0	0	0	0	0
Total HC	0.65903	0.65903	0	0	0	0
Other	24.62617	24.79426	21.7774	26.46355	42.69747	47.38362
Total HAP	25.00934	25.17743	31.7774	36.46355	52.69747	57.38362
Total VOC	46.39435	46.56244	17.55055	22.2367	37.69747	42.38362
TRS	0	0	0	0	0	0

TABLE B-8. EMISSION FACTORS FOR INDIVIDUAL SOURCES AND COMPOUNDS (g/Mg pulp) (CONTINUED)

Compound Names	EP Codes					
	119	120	121	122	123	124
Acetone	0.71842	0.71842	0.00029	0.00029	0.004	0.004
Methanol	2.25009	2.25009	0.00069	0.00069	0.01	0.01
Carbon tetrachloride	0	0	0	0	0	0
Methyl ethyl ketone	1.63134	1.63134	0.00021	0.00021	0.002	0.002
Hydrogen Sulfide	0	0	0	0	0	0
Methyl mercaptan	0	0	0	0	0	0
Dimethyl sulfide	0	0	0	0	0	0
Dimethyl disulfide	0	0	0	0	0	0
Alpha pinene	0	0	0	0	0	0
Hydro Chloric Acid	0	0	0	0	0	0
Chlorine	0.25356	0.25356	10	10	10	10
Chlorine dioxide	1.01423	1.01423	40	40	40	40
Methyl chloride	0.54691	0.54691	1.07501	1.07501	1.5	1.5
Chloroform	0.9891	1.3154	0.04616	0.03379	0.04616	0.03379
1 Benz	0	0	0	0	0	0
Phenol	0	0	0	0	0	0
Dioxin	0	0	0	0	0	0
Furan	0	0	0	0	0	0
1,1,1-Trichloroetane	0	0	0	0	0	0
2,4,5-Trichlorophenol	0	0	0	0	0	0
PCP-EF	0	0	0	0	0	0
2,4,6-Trichlorophenol	0	0	0	0	0	0
Chlorophenol	0	0	0	0	0	0
Beta Pinene	0	0	0	0	0	0
Alpha Terpinol	0	0	0	0	0	0
Acrolein	0.30917	0.30917	0.00018	0.00018	0.002	0.002
Acetaldehyde	0.25149	0.25149	0.00043	0.00043	0.005	0.005
Propionaldehyde	1.32313	1.32313	0.00049	0.00049	0.006	0.006
DACETON-EF	0	0	0	0	0	0
Toluene	0	0	0	0	0	0
Hexane	0	0	0	0	0	0
Chloromethane	0	0	0	0	0	0
p-Cymene	0	0	0	0	0	0
p-Dichlorobenzene	0	0	0	0	0	0
Formaldehyde	8.30261	8.30261	0.00461	0.00461	0.06	0.06
Acetophenol	0	0	0	0	0	0
Dimethyltrisulfide	0	0	0	0	0	0
Carbon disulfide	0	0	0	0	0	0
Total HC	0	0	0	0	0	0
Other	15.60384	15.93014	1.12778	1.11541	1.63116	1.61879
Total HAP	15.8574	16.1837	11.12778	11.11541	11.63116	11.61879
Total VOC	15.77535	16.10165	0.05306	0.04069	0.13516	0.12279
TRS	0	0	0	0	0	0

TABLE B-8. EMISSION FACTORS FOR INDIVIDUAL SOURCES AND COMPOUNDS (g/Mg pulp) (CONTINUED)

Compound Names	EP Codes					
	125	126	127	128	129	130
Acetone	0.00287	0.00287	0.00029	0.00029	0.004	0.004
Methanol	0.0075	0.0075	0.00069	0.00069	0.01	0.01
Carbon tetrachloride	0	0	0	0	0	0
Methyl ethyl ketone	0.00109	0.00109	0.00021	0.00021	0.002	0.002
Hydrogen Sulfide	0	0	0	0	0	0
Methyl mercaptan	0	0	0	0	0	0
Dimethyl sulfide	0	0	0	0	0	0
Dimethyl disulfide	0	0	0	0	0	0
Alpha pinene	0	0	0	0	0	0
Hydro Chloric Acid	0	0	0	0	0	0
Chlorine	0.25356	0.25356	10	10	10	10
Chlorine dioxide	1.01423	1.01423	40	40	40	40
Methyl chloride	0.13673	0.13673	1.07501	1.07501	1.5	1.5
Chloroform	0.00296	0.00296	0.06275	0.10605	0.06275	0.10605
1 Benz	0	0	0	0	0	0
Phenol	0	0	0	0	0	0
Dioxin	0	0	0	0	0	0
Furan	0	0	0	0	0	0
1,1,1-Trichloroetane	0	0	0	0	0	0
2,4,5-Trichlorophenol	0	0	0	0	0	0
PCP-EF	0	0	0	0	0	0
2,4,6-Trichlorophenol	0	0	0	0	0	0
Chlorophenol	0	0	0	0	0	0
Beta Pinene	0	0	0	0	0	0
Alpha Terpinol	0	0	0	0	0	0
Acrolein	0.00124	0.00124	0.00018	0.00018	0.002	0.002
Acetaldehyde	0.00314	0.00314	0.00043	0.00043	0.005	0.005
Propionaldehyde	0.00397	0.00397	0.00049	0.00049	0.006	0.006
DACETON-EF	0	0	0	0	0	0
Toluene	0	0	0	0	0	0
Hexane	0	0	0	0	0	0
Chloromethane	0	0	0	0	0	0
p-Cymene	0	0	0	0	0	0
p-Dichlorobenzene	0	0	0	0	0	0
Formaldehyde	0.04151	0.04151	0.00461	0.00461	0.06	0.06
Acetophenol	0	0	0	0	0	0
Dimethyltrisulfide	0	0	0	0	0	0
Carbon disulfide	0	0	0	0	0	0
Total HC	0	0	0	0	0	0
Other	0.19814	0.19814	1.14437	1.18767	1.64775	1.69105
Total HAP	0.4517	0.4517	11.14437	11.18767	11.64775	11.69105
Total VOC	0.06428	0.06428	0.06965	0.11295	0.15175	0.19505
TRS	0	0	0	0	0	0

TABLE B-8. EMISSION FACTORS FOR INDIVIDUAL SOURCES AND COMPOUNDS (g/Mg pulp) (CONTINUED)

Compound Names	EP Codes					
	131	132	133	134	135	136
Acetone	0.00287	0.00287	0.07319	0.07319	1	1
Methanol	0.0075	0.0075	0.20774	0.20774	3	3
Carbon tetrachloride	0	0	0	0	0	0
Methyl ethyl ketone	0.00109	0.00109	0.30965	0.30965	3	3
Hydrogen Sulfide	0	0	0	0	0	0
Methyl mercaptan	0	0	0	0	0	0
Dimethyl sulfide	0	0	0	0	0	0
Dimethyl disulfide	0	0	0	0	0	0
Alpha pinene	0	0	0	0	0	0
Hydro Chloric Acid	0	0	0	0	0	0
Chlorine	0.25356	0.25356	10	10	10	10
Chlorine dioxide	1.01423	1.01423	40	40	40	40
Methyl chloride	0.13673	0.13673	4.30004	4.30004	6	6
Chloroform	0.00403	0.00681	15.79747	14.2528	15.79747	14.2528
1 Benz	0	0	0	0	0	0
Phenol	0	0	0	0	0	0
Dioxin	0	0	0	0	0	0
Furan	0	0	0	0	0	0
1,1,1-Trichloroetane	0	0	0	0	0	0
2,4,5-Trichlorophenol	0	0	0	0	0	0
PCP-EF	0	0	0	0	0	0
2,4,6-Trichlorophenol	0	0	0	0	0	0
Chlorophenol	0	0	0	0	0	0
Beta Pinene	0	0	0	0	0	0
Alpha Terpinol	0	0	0	0	0	0
Acrolein	0.00124	0.00124	0.04416	0.04416	0.5	0.5
Acetaldehyde	0.00314	0.00314	0.03461	0.03461	0.4	0.4
Propionaldehyde	0.00397	0.00397	0.16245	0.16245	2	2
DACETON-EF	0	0	0	0	0	0
Toluene	0	0	0	0	0	0
Hexane	0	0	0	0	0	0
Chloromethane	0	0	0	0	0	0
p-Cymene	0	0	0	0	0	0
p-Dichlorobenzene	0	0	0	0	0	0
Formaldehyde	0.04151	0.04151	0.92128	0.92128	12	12
Acetophenol	0	0	0	0	0	0
Dimethyltrisulfide	0	0	0	0	0	0
Carbon disulfide	0	0	0	0	0	0
Total HC	0	0	0	0	0	0
Other	0.19921	0.20199	21.7774	20.23273	42.69747	41.1528
Total HAP	0.45277	0.45555	31.7774	30.23273	52.69747	51.1528
Total VOC	0.06535	0.06813	17.55055	16.00588	37.69747	36.1528
TRS	0	0	0	0	0	0

TABLE B-8. EMISSION FACTORS FOR INDIVIDUAL SOURCES AND COMPOUNDS (g/Mg pulp) (CONTINUED)

Compound Names	EP Codes					
	137	138	139	140	141	142
Acetone	0.71842	0.71842	1.09782	1.09782	15	15
Methanol	2.25009	2.25009	0.24236	0.24236	3.5	3.5
Carbon tetrachloride	0	0	0	0	0	0
Methyl ethyl ketone	1.63134	1.63134	1.54827	1.54827	15	15
Hydrogen Sulfide	0	0	0	0	0	0
Methyl mercaptan	0	0	0	0	0	0
Dimethyl sulfide	0	0	0	0	0	0
Dimethyl disulfide	0	0	0	0	0	0
Alpha pinene	0	0	0.065	0.065	0.065	0.065
Hydro Chloric Acid	0	0	0.01344	0.01344	0.2	0.2
Chlorine	0.25356	0.25356	0	0	0	0
Chlorine dioxide	1.01423	1.01423	1.5	1.5	1.5	1.5
Methyl chloride	0.54691	0.54691	1.79168	1.79168	2.5	2.5
Chloroform	1.01447	0.91528	3.96728	5.27608	3.96728	5.27608
1 Benz	0	0	0	0	0	0
Phenol	0	0	0	0	0	0
Dioxin	0	0	0	0	0	0
Furan	0	0	0	0	0	0
1,1,1-Trichloroetane	0	0	0.15	0.15	0.15	0.15
2,4,5-Trichlorophenol	0	0	0	0	0	0
PCP-EF	0	0	0	0	0	0
2,4,6-Trichlorophenol	0	0	0	0	0	0
Chlorophenol	0	0	0	0	0	0
Beta Pinene	0	0	0.00942	0.00942	0.01	0.01
Alpha Terpinol	0	0	0	0	0	0
Acrolein	0.30917	0.30917	0.08832	0.08832	1	1
Acetaldehyde	0.25149	0.25149	0	0	0	0
Propionaldehyde	1.32313	1.32313	0.04061	0.04061	0.5	0.5
DACETON-EF	0	0	0	0	0	0
Toluene	0	0	2.5	2.5	2.5	2.5
Hexane	0	0	0	0	0	0
Chloromethane	0	0	0	0	0	0
p-Cymene	0	0	0.5	0.5	0.5	0.5
p-Dichlorobenzene	0	0	0	0	0	0
Formaldehyde	8.30261	8.30261	0.00192	0.00192	0.025	0.025
Acetophenol	0	0	0	0	0	0
Dimethyltrisulfide	0	0	0	0	0	0
Carbon disulfide	0	0	0	0	0	0
Total HC	0	0	0.77484	0.77484	2	2
Other	15.62921	15.53002	10.33044	11.63924	29.14228	30.45108
Total HAP	15.88277	15.78358	10.34388	11.65268	29.34228	30.65108
Total VOC	15.80072	15.70153	10.83584	12.14464	44.06728	45.37608
TRS	0	0	0	0	0	0

TABLE B-8. EMISSION FACTORS FOR INDIVIDUAL SOURCES AND COMPOUNDS (g/Mg pulp) (CONTINUED)

Compound Names	EP Codes					
	143	144	145	146	147	148
Acetone	10.77623	10.77623	0.00029	0.00029	0.004	0.004
Methanol	2.6251	2.6251	0.00069	0.00069	0.01	0.01
Carbon tetrachloride	0	0	0	0	0	0
Methyl ethyl ketone	8.15671	8.15671	0.00021	0.00021	0.002	0.002
Hydrogen Sulfide	0	0	0	0	0	0
Methyl mercaptan	0	0	0	0	0	0
Dimethyl sulfide	0	0	0	0	0	0
Dimethyl disulfide	0	0	0	0	0	0
Alpha pinene	0.00343	0.00343	0	0	0	0
Hydro Chloric Acid	0.15355	0.15355	0	0	0	0
Chlorine	0	0	10	10	10	10
Chlorine dioxide	0.03803	0.03803	40	40	40	40
Methyl chloride	0.22788	0.22788	1.07501	1.07501	1.5	1.5
Chloroform	0.25477	0.33882	0.04616	0.03379	0.04616	0.03379
1 Benz	0	0	0	0	0	0
Phenol	0	0	0	0	0	0
Dioxin	0	0	0	0	0	0
Furan	0	0	0	0	0	0
1,1,1-Trichloroetane	0.00209	0.00209	0	0	0	0
2,4,5-Trichlorophenol	0	0	0	0	0	0
PCP-EF	0	0	0	0	0	0
2,4,6-Trichlorophenol	0	0	0	0	0	0
Chlorophenol	0	0	0	0	0	0
Beta Pinene	0.0007	0.0007	0	0	0	0
Alpha Terpinol	0	0	0	0	0	0
Acrolein	0.61834	0.61834	0.00018	0.00018	0.002	0.002
Acetaldehyde	0	0	0.00043	0.00043	0.005	0.005
Propionaldehyde	0.33078	0.33078	0.00049	0.00049	0.006	0.006
DACETON-EF	0	0	0	0	0	0
Toluene	0.08012	0.08012	0	0	0	0
Hexane	0	0	0	0	0	0
Chloromethane	0	0	0	0	0	0
p-Cymene	0.00417	0.00417	0	0	0	0
p-Dichlorobenzene	0	0	0	0	0	0
Formaldehyde	0.0173	0.0173	0.00461	0.00461	0.06	0.06
Acetophenol	0	0	0	0	0	0
Dimethyltrisulfide	0	0	0	0	0	0
Carbon disulfide	0	0	0	0	0	0
Total HC	0.32951	0.32951	0	0	0	0
Other	12.31309	12.39714	1.12778	1.11541	1.63116	1.61879
Total HAP	12.46664	12.55069	11.12778	11.11541	11.63116	11.61879
Total VOC	23.19716	23.28121	0.05306	0.04069	0.13516	0.12279
TRS	0	0	0	0	0	0

TABLE B-8. EMISSION FACTORS FOR INDIVIDUAL SOURCES AND COMPOUNDS (g/Mg pulp) (CONTINUED)

Compound Names	EP Codes					
	149	150	151	152	153	154
Acetone	0.00287	0.00287	0.18	0.18	0.12931	0.12931
Methanol	0.0075	0.0075	91	91	68.25267	68.25267
Carbon tetrachloride	0	0	0	0	0	0
Methyl ethyl ketone	0.00109	0.00109	0.25	0.25	0.13595	0.13595
Hydrogen Sulfide	0	0	0	0	0	0
Methyl mercaptan	0	0	0	0	0	0
Dimethyl sulfide	0	0	0	0	0	0
Dimethyl disulfide	0	0	0	0	0	0
Alpha pinene	0	0	0	0	0	0
Hydro Chloric Acid	0	0	1.56	1.56	1.1977	1.1977
Chlorine	0.25356	0.25356	10	10	0.25356	0.25356
Chlorine dioxide	1.01423	1.01423	1.95	1.95	0.04944	0.04944
Methyl chloride	0.13673	0.13673	7	7	0.63806	0.63806
Chloroform	0.00296	0.00296	40	40	2.56869	2.56869
1 Benz	0	0	0	0	0	0
Phenol	0	0	0	0	0	0
Dioxin	0	0	0	0	0	0
Furan	0	0	0	0	0	0
1,1,1-Trichloroetane	0	0	0	0	0	0
2,4,5-Trichlorophenol	0	0	0	0	0	0
PCP-EF	0	0	0	0	0	0
2,4,6-Trichlorophenol	0	0	0	0	0	0
Chlorophenol	0	0	0	0	0	0
Beta Pinene	0	0	0	0	0	0
Alpha Terpinol	0	0	0	0	0	0
Acrolein	0.00124	0.00124	0.27	0.27	0.16695	0.16695
Acetaldehyde	0.00314	0.00314	0.24	0.24	0.15089	0.15089
Propionaldehyde	0.00397	0.00397	1	1	0.66156	0.66156
DACETON-EF	0	0	0.02	0.02	0.00651	0.00651
Toluene	0	0	0.25	0.25	0.00801	0.00801
Hexane	0	0	0	0	0	0
Chloromethane	0	0	0	0	0	0
p-Cymene	0	0	2	2	0.01669	0.01669
p-Dichlorobenzene	0	0	0	0	0	0
Formaldehyde	0.04151	0.04151	1	1	0.69188	0.69188
Acetophenol	0	0	0	0	0	0
Dimethyltrisulfide	0	0	0	0	0	0
Carbon disulfide	0	0	0	0	0	0
Total HC	0	0	17.4	17.4	2.86678	2.86678
Other	0.19814	0.19814	141.01	141.01	73.27466	73.27466
Total HAP	0.4517	0.4517	152.57	152.57	74.72592	74.72592
Total VOC	0.06428	0.06428	153.61	153.61	75.65589	75.65589
TRS	0	0	0	0	0	0

TABLE B-8. EMISSION FACTORS FOR INDIVIDUAL SOURCES AND COMPOUNDS (g/Mg pulp) (CONTINUED)

Compound Names	EP Codes					
	155	156	157	158	159	160
Acetone	0.064	0.064	0.12	0.12	0	0
Methanol	3.2	3.2	3.2	3.2	0	0
Carbon tetrachloride	0	0	0	0	0	0
Methyl ethyl ketone	0.8	0.8	0.2	0.2	0	0
Hydrogen Sulfide	27	69	69	69	95.7	95.7
Methyl mercaptan	225	245	245	245	3.3	3.3
Dimethyl sulfide	823	823	823	823	2.2	2.2
Dimethyl disulfide	1542	1542	1542	1542	0.33	0.33
Alpha pinene	0	0	1.16	1.16	0	0
Hydro Chloric Acid	0	0	0	0	0	0
Chlorine	0	0	0	0	0	0
Chlorine dioxide	0	0	0	0	0	0
Methyl chloride	0	0	0	0	0	0
Chloroform	0	0	0	0	0	0
1 Benz	0	0	0	0	0	0
Phenol	0	0	0	0	0	0
Dioxin	0	0	0	0	0	0
Furan	0	0	0	0	0	0
1,1,1-Trichloroetane	0	0	0	0	0	0
2,4,5-Trichlorophenol	0	0	0	0	0	0
PCP-EF	0	0	0	0	0	0
2,4,6-Trichlorophenol	0	0	0	0	0	0
Chlorophenol	0	0	0	0	0	0
Beta Pinene	0	0	0	0	0	0
Alpha Terpinol	0	0	0	0	0	0
Acrolein	0	0	0.0005	0.0005	0	0
Acetaldehyde	0.17	0.17	0.631	0.631	0	0
Propionaldehyde	0	0	0	0	0	0
DACETON-EF	0	0	0	0	0	0
Toluene	0	0	0	0	0	0
Hexane	0	0	0	0	0	0
Chloromethane	0	0	0	0	0	0
p-Cymene	0	0	0	0	0	0
p-Dichlorobenzene	0	0	0	0	0	0
Formaldehyde	0.03	0.03	0.008	0.008	0	0
Acetophenol	0	0	0	0	0	0
Dimethyltrisulfide	0	0	0	0	0	0
Carbon disulfide	0	0	0	0	0	0
Total HC	0	0	1490	1490	0	0
Other	4.2	4.2	4.0395	4.0395	0	0
Total HAP	4.2	4.2	4.0395	4.0395	0	0
Total VOC	2594.264	2614.264	4105.32	4105.32	5.83	5.83
TRS	2617	2679	2679	2679	101.53	101.53

TABLE B-8. EMISSION FACTORS FOR INDIVIDUAL SOURCES AND COMPOUNDS (g/Mg pulp) (CONTINUED)

Compound Names	EP Codes					
	161	162	163	164	165	166
Acetone	4	4	1.2	1.6	1.51742	0.04
Methanol	500	500	590	100	6.21319	0.24
Carbon tetrachloride	0	0	0	0	0	0
Methyl ethyl ketone	2	2	1.2	2.2	2.4105	0.1
Hydrogen Sulfide	6.7	6.7	98	0	53	53
Methyl mercaptan	16.1	16.1	113	113	75	75
Dimethyl sulfide	26.5	26.5	101	101	2422	2422
Dimethyl disulfide	21.8	21.8	18.3	18.3	1469	1469
Alpha pinene	0.1	0.1	0	0.01	263.1999	0
Hydro Chloric Acid	0	0	0	0	0	0
Chlorine	0	0	0	0	0	0
Chlorine dioxide	0	0	0	0	0	0
Methyl chloride	0	0	0	0	0	0
Chloroform	0	0	0	0	0	0
1 Benz	0	0	0	0	0	0
Phenol	0	0	0	0	0	0
Dioxin	0	0	0	0	0	0
Furan	0	0	0	0	0	0
1,1,1-Trichloroetane	0	0	0	0	0	0
2,4,5-Trichlorophenol	0	0	0	0	0	0
PCP-EF	0	0	0	0	0	0
2,4,6-Trichlorophenol	0	0	0	0	0	0
Chlorophenol	0	0	0	0	0	0
Beta Pinene	0	0	0	0.1	0.09954	0
Alpha Terpinol	0	0	0	0	0.70248	0
Acrolein	0.002	0.002	0	0.03	0.24382	0.001
Acetaldehyde	3	3	0	1	1.57845	0.035
Propionaldehyde	0.22	0.22	0	0.2	0	0
DACETON-EF	0	0	0	0	0	0
Toluene	0	0	0	0	4.24162	0
Hexane	0	0	0	0	85	0
Chloromethane	0	0	0	0	0	0
p-Cymene	0	0	0	0	0	0
p-Dichlorobenzene	0	0	0	0	0	0
Formaldehyde	0.06	0.06	0	1	0.34563	0.017
Acetophenol	0	0	0	0	2.22346	0
Dimethyltrisulfide	0	0	0	0	0	0
Carbon disulfide	0	0	0	0	0	0
Total HC	400	400	34	4	33.04327	0
Other	505.282	505.282	591.2	104.43	102.2567	0.393
Total HAP	505.282	505.282	591.2	104.43	102.2567	0.393
Total VOC	973.782	973.782	858.7	342.44	4366.819	3966.433
TRS	71.1	71.1	330.3	232.3	4019	4019

TABLE B-8. EMISSION FACTORS FOR INDIVIDUAL SOURCES AND COMPOUNDS (g/Mg pulp) (CONTINUED)

Compound Names	EP Codes					
	169	170	171	172	175	176
Acetone	1	0.16	2.9	4.3	5.05806	7.25722
Methanol	91	3	590	346	20.71063	31.06594
Carbon tetrachloride	0	0	0	0	0	0
Methyl ethyl ketone	7	0.1	22	14	8.03501	3.21401
Hydrogen Sulfide	53	53	98	98	0	0
Methyl mercaptan	1125	1125	113	113	0	0
Dimethyl sulfide	533	533	101	101	0	0
Dimethyl disulfide	661	661	18.3	18.3	0	0
Alpha pinene	0	77	0	30	600	870
Hydro Chloric Acid	0	0	0	0	0	0
Chlorine	0	0	0	0	0	0
Chlorine dioxide	0	0	0	0	0	0
Methyl chloride	0	0	0	0	0	0
Chloroform	0	0	0	0	0	0
1 Benz	0	0	0	0	0	0
Phenol	0	0	0	0	0	0
Dioxin	0	0	0	0	0	0
Furan	0	0	0	0	0	0
1,1,1-Trichloroetane	0	0	0	0	0	0
2,4,5-Trichlorophenol	0	0	0	0	0	0
PCP-EF	0	0	0	0	0	0
2,4,6-Trichlorophenol	0	0	0	0	0	0
Chlorophenol	0	0	0	0	0	0
Beta Pinene	0	10	0	4.8	0.3	600
Alpha Terpinol	0	3	0	0	2.34161	2.92701
Acrolein	0	0.0006	0	0.013	0.81272	0.43345
Acetaldehyde	2	0.4	7	9.6	5.26149	0.18415
Propionaldehyde	0.184	0	0	2.2	0	0.13808
DACETON-EF	0	0	0	0	0	0
Toluene	0	0.0001	0	0	6	243
Hexane	0	0	0	0	51	300
Chloromethane	0	0	0	0	0	0
p-Cymene	0	0.0004	0	0	0	0.021
p-Dichlorobenzene	0	0	0	0	0	0
Formaldehyde	0.5	0.00017	1.7	0.44	1.15209	0.69125
Acetophenol	0	0	0	0	3	0
Dimethyltrisulfide	0	0	0	0	0	0
Carbon disulfide	0	0	0	0	0	0
Total HC	0	2500	340	34	110.1442	550.7212
Other	100.684	3.50087	620.7	372.253	95.97194	578.7269
Total HAP	100.684	3.50087	620.7	372.253	95.97194	578.7269
Total VOC	2420.684	4912.661	1195.9	677.653	813.8158	2609.653
TRS	2372	2372	330.3	330.3	0	0

TABLE B-8. EMISSION FACTORS FOR INDIVIDUAL SOURCES AND COMPOUNDS (g/Mg pulp) (CONTINUED)

Compound Names	EP Codes					
	177	178	181	182	183	184
Acetone	23	33	0.512	0.73461	11	37.98302
Methanol	100	150	2.22926	3.34388	176	186.3905
Carbon tetrachloride	0	0	0	0	0	0
Methyl ethyl ketone	25	10	0.5503	0.22012	7	7.26621
Hydrogen Sulfide	53	53	0	0	0	0
Methyl mercaptan	788	788	0	0	45	45.3
Dimethyl sulfide	533	533	0	0	116	116
Dimethyl disulfide	10	661	0	0	59	59
Alpha pinene	200	290	3.04156	4.41026	200	13.36248
Hydro Chloric Acid	0	0	0	0	0	0
Chlorine	0	0	0	0	0	0
Chlorine dioxide	0	0	0	0	0	0
Methyl chloride	0	0	0	0	0	0
Chloroform	0	0	0	0	0	0
1 Benz	0	0	0	0	0	0
Phenol	0	0	0	0	0	0
Dioxin	0	0	0	0	0	0
Furan	0	0	0	0	0	0
1,1,1-Trichloroetane	0	0	0	0	0	0
2,4,5-Trichlorophenol	0	0	0	0	0	0
PCP-EF	0	0	0	0	0	0
2,4,6-Trichlorophenol	0	0	0	0	0	0
Chlorophenol	0	0	0	0	0	0
Beta Pinene	0.1	200	0.00166	3.31062	35	12.22611
Alpha Terpinol	1.6	2	0.03129	0.03911	4	0.28222
Acrolein	3	1.6	0.06641	0.03542	0.07	1.42378
Acetaldehyde	20	0.7	0.44309	0.01551	3.6	0.6454
Propionaldehyde	0	0.56	0	0.01243	0.4	0.55885
DACETON-EF	0	0	0	0	0	0
Toluene	2	81	0.02526	1.02312	0.4	2.30664
Hexane	17	100	0.00543	0.03195	0	0.0324
Chloromethane	0	0	0	0	0	0
p-Cymene	0	0.007	0	0.00004	9	0.00005
p-Dichlorobenzene	0	0	0	0	0	0
Formaldehyde	5	3	0.11117	0.0667	2	3.25619
Acetophenol	1	0	0.01236	0	0	0
Dimethyltrisulfide	71	71	0	0	0	0
Carbon disulfide	1	0	0	0	0	0
Total HC	100	500	2.02718	10.13588	954	94.76082
Other	174	346.86	3.44328	4.74913	189.47	201.88
Total HAP	174	346.86	3.44328	4.74913	189.47	201.88
Total VOC	1900.7	3424.867	9.05697	23.37965	1622.47	580.7947
TRS	1456	2106	0	0	220	220.3

TABLE B-8. EMISSION FACTORS FOR INDIVIDUAL SOURCES AND COMPOUNDS (g/Mg pulp) (CONTINUED)

Compound Names	EP Codes					
	185	186	187	188	189	190
Acetone	0.2	0.007	10	3.9	2.5	0.975
Methanol	20	1.4	3000	150	615	30.75
Carbon tetrachloride	0	0	0	0	0	0
Methyl ethyl ketone	0.85	0.006	30	7.7	6.9	1.771
Hydrogen Sulfide	823	823	364	364	195	195
Methyl mercaptan	638	638	126	126	42.1	42.1
Dimethyl sulfide	533	533	22.4	22.4	21.5	21.5
Dimethyl disulfide	1542	1542	12.3	12.3	5.46	5.46
Alpha pinene	8.5	3.9	1	3.7	0.13	0.481
Hydro Chloric Acid	0	0	0	0	0	0
Chlorine	0	0	0	0	0	0
Chlorine dioxide	0	0	0	0	0	0
Methyl chloride	0	0	0	0	0	0
Chloroform	0	0	0	0	0	0
1 Benz	0	0	0	0	0	0
Phenol	0	0	0	0	0	0
Dioxin	0	0	0	0	0	0
Furan	0	0	0	0	0	0
1,1,1-Trichloroetane	0	0	0	0	0	0
2,4,5-Trichlorophenol	0	0	0	0	0	0
PCP-EF	0	0	0	0	0	0
2,4,6-Trichlorophenol	0	0	0	0	0	0
Chlorophenol	0	0	0	0	0	0
Beta Pinene	3.7	2.8	1	3.4	0	0
Alpha Terpinol	0	0	0	0	0	0
Acrolein	0	0.3	0	2	0.11	0
Acetaldehyde	0.097	0.014	7	4	1.3	0.74286
Propionaldehyde	0	0	0.5	2	0.15	0.6
DACETON-EF	0	0	0	0	0	0
Toluene	0	0	0	0	0	0
Hexane	0	0	0	0	0	0
Chloromethane	0	0	0	0	0	0
p-Cymene	0	0	0	0	0	0
p-Dichlorobenzene	0	0	0	0	0	0
Formaldehyde	0.04	0.03	5	5	5.2	5.2
Acetophenol	0	0	0	0	0	0
Dimethyltrisulfide	0	0	0	0	0	0
Carbon disulfide	0	0	0	0	0	0
Total HC	2640	348	0	200	9.3	0
Other	20.987	1.75	3042.5	170.7	628.66	39.06386
Total HAP	20.987	1.75	3042.5	170.7	628.66	39.06386
Total VOC	5386.387	3069.457	3215.2	542.4	709.65	109.5799
TRS	3536	3536	524.7	524.7	264.06	264.06

TABLE B-8. EMISSION FACTORS FOR INDIVIDUAL SOURCES AND COMPOUNDS (g/Mg pulp) (CONTINUED)

Compound Names	EP Codes					
	191	192	193	194	197	198
Acetone	0	1	73	73	0.5	10
Methanol	4.72202	50	76	76	100	40
Carbon tetrachloride	0	0	0	0	0	0
Methyl ethyl ketone	7.90645	0.2	82	82	1	0.1
Hydrogen Sulfide	0	0	0	0	0	0
Methyl mercaptan	0	0	0	0	0	0
Dimethyl sulfide	0	0	0	0	0	0
Dimethyl disulfide	0	0	0	0	0	0
Alpha pinene	123.704	1.4	94	94	0.03	10
Hydro Chloric Acid	0	0	0	0	0	0
Chlorine	0	0	0	0	0	0
Chlorine dioxide	0	0	0	0	0	0
Methyl chloride	0	0	0	0	0	0
Chloroform	0	0	0	0	0	0
1 Benz	0	0	0	0	0	0
Phenol	0	0	0	0	0	0
Dioxin	0	0	0	0	0	0
Furan	0	0	0	0	0	0
1,1,1-Trichloroetane	0	0	0	0	0	0
2,4,5-Trichlorophenol	0	0	0	0	0	0
PCP-EF	0	0	0	0	0	0
2,4,6-Trichlorophenol	0	0	0	0	0	0
Chlorophenol	0	0	0	0	0	0
Beta Pinene	0	0.7	0	0	0	6
Alpha Terpinol	0	0	0	0	0	0
Acrolein	0.16254	0	2	2	1	0.02
Acetaldehyde	1.02599	0	13	13	50	0.15
Propionaldehyde	0.73969	0	10	10	0.01	0.4
DACETON-EF	0	0	0	0	0	0
Toluene	0	0	0	0	0	0
Hexane	0	0	0	0	0	0
Chloromethane	0	0	0	0	0	0
p-Cymene	0	0	0	0	0	0
p-Dichlorobenzene	0	0	0	0	0	0
Formaldehyde	4.12679	0	59.7	59.7	2	2
Acetophenol	0	0	0	0	0	0
Dimethyltrisulfide	0	0	0	0	0	0
Carbon disulfide	0	0	0	0	0	0
Total HC	0	89	0	0	0	0
Other	18.68348	50.2	242.7	242.7	154.01	42.67
Total HAP	18.68348	50.2	242.7	242.7	154.01	42.67
Total VOC	142.3874	142.3	409.7	409.7	154.54	68.67
TRS	0	0	0	0	0	0

TABLE B-8. EMISSION FACTORS FOR INDIVIDUAL SOURCES AND COMPOUNDS (g/Mg pulp) (CONTINUED)

Compound Names	EP Codes					
	199	200	201	202	203	204
Acetone	0.19792	0.19792	0.19792	0.5	0.2	0.007
Methanol	11.80506	11.80506	11.80506	70	20	1.4
Carbon tetrachloride	0	0	0	0	0	0
Methyl ethyl ketone	0.28926	0.28926	0.28926	0.04	0.85	0.006
Hydrogen Sulfide	27	27	53	53	0	0
Methyl mercaptan	225	225	75	75	0	0
Dimethyl sulfide	0.246	5	0.007	0.007	550	550
Dimethyl disulfide	0	0	0	0.008	0	0
Alpha pinene	526.3998	526.3998	526.3998	1	8.5	3.9
Hydro Chloric Acid	0	0	0	0	0	0
Chlorine	0	0	0	0	0	0
Chlorine dioxide	0	0	0	0	0	0
Methyl chloride	0	0	0	0	0	0
Chloroform	0	0	0	0	0	0
1 Benz	0	0	0	0	0	0
Phenol	0	0	0	0	0	0
Dioxin	0	0	0	0	0	0
Furan	0	0	0	0	0	0
1,1,1-Trichloroetane	0	0	0	0	0	0
2,4,5-Trichlorophenol	0	0	0	0	0	0
PCP-EF	0	0	0	0	0	0
2,4,6-Trichlorophenol	0	0	0	0	0	0
Chlorophenol	0	0	0	0	0	0
Beta Pinene	298.6056	298.6056	298.6056	0.03	3.7	2.8
Alpha Terpinol	0	0	0	0	0	0
Acrolein	1.78799	1.78799	1.78799	0.005	0	0.3
Acetaldehyde	0.03157	0.03157	0.03157	1	0.097	0.014
Propionaldehyde	0.01405	0.01405	0.01405	0.06	0	0
DACETON-EF	0	0	0	0	0	0
Toluene	8.48324	8.48324	8.48324	0.005	0	0
Hexane	0	0	0	0	0	0
Chloromethane	0	0	0	0	0	0
p-Cymene	4300	4300	4300	14	0	0
p-Dichlorobenzene	0	0	0	0	0	0
Formaldehyde	0.06913	0.06913	0.06913	0.004	0.04	0.03
Acetophenol	0	0	0	0	0	0
Dimethyltrisulfide	0	0	0	0	0	0
Carbon disulfide	0	0	0	0	0	0
Total HC	0	0	0	87	2640	348
Other	22.4803	22.4803	22.4803	71.114	20.987	1.75
Total HAP	22.4803	22.4803	22.4803	71.114	20.987	1.75
Total VOC	5372.93	5377.684	5222.691	248.659	3223.387	906.457
TRS	252.246	257	128.007	128.015	550	550

TABLE B-8. EMISSION FACTORS FOR INDIVIDUAL SOURCES AND COMPOUNDS (g/Mg pulp) (CONTINUED)

Compound Names	EP Codes					
	206	207	210	211	212	213
Acetone	3	3	0.19792	0.19792	0.3	0.3
Methanol	190	190	11.80506	11.80506	50	50
Carbon tetrachloride	0	0	0	0	0	0
Methyl ethyl ketone	3	3	0.28926	0.28926	0.2	0.2
Hydrogen Sulfide	53	53	0	0	98	98
Methyl mercaptan	788	788	0	0	113	113
Dimethyl sulfide	0.01	0.01	0	0	101	101
Dimethyl disulfide	0	0	0	0	18.3	18.3
Alpha pinene	400	400	526.3998	526.3998	0.5	0.5
Hydro Chloric Acid	0	0	0	0	0	0
Chlorine	0	0	0	0	0	0
Chlorine dioxide	0	0	0	0	0	0
Methyl chloride	0	0	0	0	0	0
Chloroform	0	0	0	0	0	0
1 Benz	0	0	0	0	0	0
Phenol	0	0	0	0	0	0
Dioxin	0	0	0	0	0	0
Furan	0	0	0	0	0	0
1,1,1-Trichloroetane	0	0	0	0	0	0
2,4,5-Trichlorophenol	0	0	0	0	0	0
PCP-EF	0	0	0	0	0	0
2,4,6-Trichlorophenol	0	0	0	0	0	0
Chlorophenol	0	0	0	0	0	0
Beta Pinene	300	300	298.6056	298.6056	0.5	0.5
Alpha Terpinol	0	0	0	0	0	0
Acrolein	22	22	1.78799	1.78799	3	3
Acetaldehyde	0.4	0.4	0.03157	0.03157	0.01	0.01
Propionaldehyde	0.19	0.19	0.01405	0.01405	0.05	0.05
DACETON-EF	0	0	0	0	0	0
Toluene	4	4	8.48324	8.48324	0.004	0.004
Hexane	0	0	0	0	0	0
Chloromethane	0	0	0	0	0	0
p-Cymene	860	860	4300	4300	0.3	0.3
p-Dichlorobenzene	0	0	0	0	0	0
Formaldehyde	1	1	0.06913	0.06913	0.5	0.5
Acetophenol	0	0	0	0	0	0
Dimethyltrisulfide	0	0	0	0	0	0
Carbon disulfide	0	0	0	0	0	0
Total HC	0	0	0	0	70	70
Other	220.59	220.59	22.4803	22.4803	53.764	53.764
Total HAP	220.59	220.59	22.4803	22.4803	53.764	53.764
Total VOC	2571.6	2571.6	5147.684	5147.684	357.664	357.664
TRS	841.01	841.01	0	0	330.3	330.3

TABLE B-8. EMISSION FACTORS FOR INDIVIDUAL SOURCES AND COMPOUNDS (g/Mg pulp) (CONTINUED)

Compound Names	EP Codes					
	216	217	218	219	220	221
Acetone	2	2	4.81615	1	73	73
Methanol	300	300	4.72202	50	76	76
Carbon tetrachloride	0	0	0	0	0	0
Methyl ethyl ketone	0.4	0.4	7.90645	0.2	82	82
Hydrogen Sulfide	0	0	0	0	0	0
Methyl mercaptan	0	0	0	0	0	0
Dimethyl sulfide	0	0	0	0	0	0
Dimethyl disulfide	0	0	0	0	0	0
Alpha pinene	4	4	0	1.4	0	0
Hydro Chloric Acid	0	0	0	0	0	0
Chlorine	0	0	0	0	0	0
Chlorine dioxide	0	0	0	0	0	0
Methyl chloride	0	0	0	0	0	0
Chloroform	0	0	0	0	0	0
1 Benz	0	0	0	0	0	0
Phenol	0	0	0	0	0	0
Dioxin	0	0	0	0	0	0
Furan	0	0	0	0	0	0
1,1,1-Trichloroetane	0	0	0	0	0	0
2,4,5-Trichlorophenol	0	0	0	0	0	0
PCP-EF	0	0	0	0	0	0
2,4,6-Trichlorophenol	0	0	0	0	0	0
Chlorophenol	0	0	0	0	0	0
Beta Pinene	4	4	0	0.7	0	0
Alpha Terpinol	0	0	0	0	0	0
Acrolein	4	4	0.13004	0	1.6	1.6
Acetaldehyde	0	0	1.02599	0	13	13
Propionaldehyde	0.3	0.3	0.73969	0	10	10
DACETON-EF	0	0	0	0	0	0
Toluene	0	0	0	0	0	0
Hexane	0	0	0	0	0	0
Chloromethane	0	0	0	0	0	0
p-Cymene	0	0	0	0	0	0
p-Dichlorobenzene	0	0	0	0	0	0
Formaldehyde	2	2	4.14753	0	60	60
Acetophenol	0	0	0	0	0	0
Dimethyltrisulfide	0	0	0	0	0	0
Carbon disulfide	0	0	0	0	0	0
Total HC	638	638	0	89	0	0
Other	306.7	306.7	18.67172	50.2	242.6	242.6
Total HAP	306.7	306.7	18.67172	50.2	242.6	242.6
Total VOC	954.7	954.7	23.48787	142.3	315.6	315.6
TRS	0	0	0	0	0	0

TABLE B-8. EMISSION FACTORS FOR INDIVIDUAL SOURCES AND COMPOUNDS (g/Mg pulp) (CONTINUED)

Compound Names	EP Codes					
	228	229	230	231	232	233
Acetone	4.81615	4.81615	0.0066	0.0066	1.5	1.5
Methanol	4.72202	4.72202	0.02	0.02	28	28
Carbon tetrachloride	0	0	0	0	0	0
Methyl ethyl ketone	7.90645	7.90645	0.00011	0.00011	0.2	0.2
Hydrogen Sulfide	0	0	0	0	53	53
Methyl mercaptan	0	0	0	0	788	788
Dimethyl sulfide	0	0	10	10	533	533
Dimethyl disulfide	0	0	0	0	661	661
Alpha pinene	0	0	0.00025	0.00025	300	300
Hydro Chloric Acid	0	0	0	0	0	0
Chlorine	0	0	0	0	0	0
Chlorine dioxide	0	0	0	0	0	0
Methyl chloride	0	0	0	0	0	0
Chloroform	0	0	0	0	0	0
1 Benz	0	0	0	0	0	0
Phenol	0	0	0	0	0	0
Dioxin	0	0	0	0	0	0
Furan	0	0	0	0	0	0
1,1,1-Trichloroetane	0	0	0	0	0	0
2,4,5-Trichlorophenol	0	0	0	0	0	0
PCP-EF	0	0	0	0	0	0
2,4,6-Trichlorophenol	0	0	0	0	0	0
Chlorophenol	0	0	0	0	0	0
Beta Pinene	0	0	0.0077	0.0077	0	0
Alpha Terpinol	0	0	0	0	0	0
Acrolein	0.13004	0.13004	0.00014	0.00014	0.00004	0.00004
Acetaldehyde	1.02599	1.02599	0.00024	0.00024	0.001	0.001
Propionaldehyde	0.73969	0.73969	0.00001	0.00001	0.0005	0.0005
DACETON-EF	0	0	0	0	0	0
Toluene	0	0	0.00012	0.00012	0	0
Hexane	0	0	0	0	0	0
Chloromethane	0	0	0	0	0	0
p-Cymene	0	0	0.00012	0.00012	0.17	0.17
p-Dichlorobenzene	0	0	0	0	0	0
Formaldehyde	4.14753	4.14753	0.0025	0.0025	0.01	0.01
Acetophenol	0	0	0	0	0	0
Dimethyltrisulfide	0	0	0	0	71	71
Carbon disulfide	0	0	0	0	0	0
Total HC	0	0	0	0	0	0
Other	18.67172	18.67172	0.02312	0.02312	28.21154	28.21154
Total HAP	18.67172	18.67172	0.02312	0.02312	28.21154	28.21154
Total VOC	23.48787	23.48787	10.03779	10.03779	2382.882	2382.882
TRS	0	0	10	10	2106	2106

TABLE B-8. EMISSION FACTORS FOR INDIVIDUAL SOURCES AND COMPOUNDS (g/Mg pulp) (CONTINUED)

Compound Names	EP Codes					
	301	302	303	304	305	306
Acetone	1.09782	1.09782	15	15	10.77623	10.77623
Methanol	0.24236	0.24236	3.5	3.5	2.6251	2.6251
Carbon tetrachloride	0	0	0	0	0	0
Methyl ethyl ketone	1.54827	1.54827	15	15	8.15671	8.15671
Hydrogen Sulfide	0	0	0	0	0	0
Methyl mercaptan	0	0	0	0	0	0
Dimethyl sulfide	0	0	0	0	0	0
Dimethyl disulfide	0	0	0	0	0	0
Alpha pinene	0.065	0.065	0.065	0.065	0.00343	0.00343
Hydro Chloric Acid	0.01344	0.01344	0.2	0.2	0.15355	0.15355
Chlorine	0	0	0	0	0	0
Chlorine dioxide	1.5	1.5	1.5	1.5	0.03803	0.03803
Methyl chloride	1.79168	1.79168	2.5	2.5	0.22788	0.22788
Chloroform	3.96728	5.27608	3.96728	5.27608	0.25477	0.33882
1 Benz	0	0	0	0	0	0
Phenol	0	0	0	0	0	0
Dioxin	0	0	0	0	0	0
Furan	0	0	0	0	0	0
1,1,1-Trichloroetane	0.15	0.15	0.15	0.15	0.00209	0.00209
2,4,5-Trichlorophenol	0	0	0	0	0	0
PCP-EF	0	0	0	0	0	0
2,4,6-Trichlorophenol	0	0	0	0	0	0
Chlorophenol	0	0	0	0	0	0
Beta Pinene	0.00942	0.00942	0.01	0.01	0.0007	0.0007
Alpha Terpinol	0	0	0	0	0	0
Acrolein	0.08832	0.08832	1	1	0.61834	0.61834
Acetaldehyde	0	0	0	0	0	0
Propionaldehyde	0.04061	0.04061	0.5	0.5	0.33078	0.33078
DACETON-EF	0	0	0	0	0	0
Toluene	2.5	2.5	2.5	2.5	0.08012	0.08012
Hexane	0	0	0	0	0	0
Chloromethane	0	0	0	0	0	0
p-Cymene	0.5	0.5	0.5	0.5	0.00417	0.00417
p-Dichlorobenzene	0	0	0	0	0	0
Formaldehyde	0.00192	0.00192	0.025	0.025	0.0173	0.0173
Acetophenol	0	0	0	0	0	0
Dimethyltrisulfide	0	0	0	0	0	0
Carbon disulfide	0	0	0	0	0	0
Total HC	0.77484	0.77484	2	2	0.32951	0.32951
Other	10.33044	11.63924	29.14228	30.45108	12.31309	12.39714
Total HAP	10.34388	11.65268	29.34228	30.65108	12.46664	12.55069
Total VOC	10.83584	12.14464	44.06728	45.37608	23.19716	23.28121
TRS	0	0	0	0	0	0

TABLE B-8. EMISSION FACTORS FOR INDIVIDUAL SOURCES AND COMPOUNDS (g/Mg pulp) (CONTINUED)

Compound Names	EP Codes					
	307	308	309	310	311	312
Acetone	3.11048	3.11048	42.5	42.5	30.53266	30.53266
Methanol	2.70061	2.70061	39	39	29.25114	29.25114
Carbon tetrachloride	0	0	0	0	0	0
Methyl ethyl ketone	3.25137	3.25137	31.5	31.5	17.1291	17.1291
Hydrogen Sulfide	0	0	0	0	0	0
Methyl mercaptan	0	0	0	0	0	0
Dimethyl sulfide	0	0	0	0	0	0
Dimethyl disulfide	0	0	0	0	0	0
Alpha pinene	0	0	0	0	0	0
Hydro Chloric Acid	0	0	0	0	0	0
Chlorine	0	0	0	0	0	0
Chlorine dioxide	0	0	0	0	0	0
Methyl chloride	2.29335	2.29335	3.2	3.2	0.29169	0.29169
Chloroform	1.97827	1.44816	1.97827	1.44816	0.12704	0.093
1 Benz	0	0	0	0	0	0
Phenol	0	0	0	0	0	0
Dioxin	0	0	0	0	0	0
Furan	0	0	0	0	0	0
1,1,1-Trichloroetane	0	0	0	0	0	0
2,4,5-Trichlorophenol	0	0	0	0	0	0
PCP-EF	0	0	0	0	0	0
2,4,6-Trichlorophenol	0	0	0	0	0	0
Chlorophenol	0	0	0	0	0	0
Beta Pinene	0	0	0	0	0	0
Alpha Terpinol	0	0	0	0	0	0
Acrolein	0.09274	0.09274	1.05	1.05	0.64925	0.64925
Acetaldehyde	0.09085	0.09085	1.05	1.05	0.66016	0.66016
Propionaldehyde	0.04873	0.04873	0.6	0.6	0.39694	0.39694
DACETON-EF	0	0	0	0	0	0
Toluene	3	3	3	3	0.09615	0.09615
Hexane	0	0	0	0	0	0
Chloromethane	0	0	0	0	0	0
p-Cymene	0.5	0.5	0.5	0.5	0.00417	0.00417
p-Dichlorobenzene	0	0	0	0	0	0
Formaldehyde	0.20345	0.20345	2.65	2.65	1.83349	1.83349
Acetophenol	0	0	0	0	0	0
Dimethyltrisulfide	0	0	0	0	0	0
Carbon disulfide	0	0	0	0	0	0
Total HC	0	0	0	0	0	0
Other	13.65937	13.12926	84.02827	83.49816	50.43496	50.40092
Total HAP	13.65937	13.12926	84.02827	83.49816	50.43496	50.40092
Total VOC	14.9765	14.44639	123.8283	123.2982	80.6801	80.64606
TRS	0	0	0	0	0	0

TABLE B-8. EMISSION FACTORS FOR INDIVIDUAL SOURCES AND COMPOUNDS (g/Mg pulp) (CONTINUED)

Compound Names	EP Codes					
	313	314	315	316	317	318
Acetone	3.11048	3.11048	42.5	42.5	30.53266	30.53266
Methanol	2.70061	2.70061	39	39	29.25114	29.25114
Carbon tetrachloride	0	0	0	0	0	0
Methyl ethyl ketone	3.25137	3.25137	31.5	31.5	17.1291	17.1291
Hydrogen Sulfide	0	0	0	0	0	0
Methyl mercaptan	0	0	0	0	0	0
Dimethyl sulfide	0	0	0	0	0	0
Dimethyl disulfide	0	0	0	0	0	0
Alpha pinene	0	0	0	0	0	0
Hydro Chloric Acid	0	0	0	0	0	0
Chlorine	0	0	0	0	0	0
Chlorine dioxide	0	0	0	0	0	0
Methyl chloride	2.29335	2.29335	3.2	3.2	0.29169	0.29169
Chloroform	1.97827	1.44816	1.97827	1.44816	0.12704	0.093
1 Benz	0	0	0	0	0	0
Phenol	0	0	0	0	0	0
Dioxin	0	0	0	0	0	0
Furan	0	0	0	0	0	0
1,1,1-Trichloroetane	0	0	0	0	0	0
2,4,5-Trichlorophenol	0	0	0	0	0	0
PCP-EF	0	0	0	0	0	0
2,4,6-Trichlorophenol	0	0	0	0	0	0
Chlorophenol	0	0	0	0	0	0
Beta Pinene	0	0	0	0	0	0
Alpha Terpinol	0	0	0	0	0	0
Acrolein	0.09274	0.09274	1.05	1.05	0.64925	0.64925
Acetaldehyde	0.09085	0.09085	1.05	1.05	0.66016	0.66016
Propionaldehyde	0.04873	0.04873	0.6	0.6	0.39694	0.39694
DACETON-EF	0	0	0	0	0	0
Toluene	3	3	3	3	0.09615	0.09615
Hexane	0	0	0	0	0	0
Chloromethane	0	0	0	0	0	0
p-Cymene	0.5	0.5	0.5	0.5	0.00417	0.00417
p-Dichlorobenzene	0	0	0	0	0	0
Formaldehyde	0.20345	0.20345	2.65	2.65	1.83349	1.83349
Acetophenol	0	0	0	0	0	0
Dimethyltrisulfide	0	0	0	0	0	0
Carbon disulfide	0	0	0	0	0	0
Total HC	0	0	0	0	0	0
Other	13.65937	13.12926	84.02827	83.49816	50.43496	50.40092
Total HAP	13.65937	13.12926	84.02827	83.49816	50.43496	50.40092
Total VOC	14.9765	14.44639	123.8283	123.2982	80.6801	80.64606
TRS	0	0	0	0	0	0

TABLE B-8. EMISSION FACTORS FOR INDIVIDUAL SOURCES AND COMPOUNDS (g/Mg pulp) (CONTINUED)

Compound Names	EP Codes					
	401	402	403	404	405	406
Acetone	0	1	73	73	6.22096	6.22096
Methanol	4.72202	50	76	76	12.63751	11.73949
Carbon tetrachloride	0	0	0	0	0	0
Methyl ethyl ketone	7.90645	0.2	82	82	7.83702	7.67144
Hydrogen Sulfide	0	0	0	0	0	0
Methyl mercaptan	0	0	0	0	0	0
Dimethyl sulfide	0	0	0	0	0	0
Dimethyl disulfide	0	0	0	0	0	0
Alpha pinene	123.704	1.4	94	94	0	0
Hydro Chloric Acid	0	0	0	0	0	0
Chlorine	0	0	0	0	0	0
Chlorine dioxide	0	0	0	0	0	0
Methyl chloride	0	0	0	0	0	0
Chloroform	0	0	0	0	0	0
1 Benz	0	0	0	0	0	0
Phenol	0	0	0	0	0	0
Dioxin	0	0	0	0	0	0
Furan	0	0	0	0	0	0
1,1,1-Trichloroetane	0	0	0	0	0	0
2,4,5-Trichlorophenol	0	0	0	0	0	0
PCP-EF	0	0	0	0	0	0
2,4,6-Trichlorophenol	0	0	0	0	0	0
Chlorophenol	0	0	0	0	0	0
Beta Pinene	0	0.7	0	0	0	0
Alpha Terpinol	0	0	0	0	0	0
Acrolein	0.16254	0	2	2	0.18548	0.18548
Acetaldehyde	1.02599	0	13	13	0.18171	0.18171
Propionaldehyde	0.73969	0	10	10	0.09747	0.09747
DACETON-EF	0	0	0	0	0	0
Toluene	0	0	0	0	6	6
Hexane	0	0	0	0	0	0
Chloromethane	0	0	0	0	0	0
p-Cymene	0	0	0	0	1	1
p-Dichlorobenzene	0	0	0	0	0	0
Formaldehyde	4.12679	0	59.7	59.7	0.4069	0.4069
Acetophenol	0	0	0	0	0	0
Dimethyltrisulfide	0	0	0	0	0	0
Carbon disulfide	0	0	0	0	0	0
Total HC	0	89	0	0	0	0
Other	18.68348	50.2	242.7	242.7	27.34609	26.28249
Total HAP	18.68348	50.2	242.7	242.7	27.34609	26.28249
Total VOC	142.3874	142.3	409.7	409.7	34.56705	33.50345
TRS	0	0	0	0	0	0

TABLE B-8. EMISSION FACTORS FOR INDIVIDUAL SOURCES AND COMPOUNDS (g/Mg pulp) (CONTINUED)

Compound Names	EP Codes			
	407	408	409	410
Acetone	0	85	85	61.06531
Methanol	59.21163	85.87418	86.7722	59.15395
Carbon tetrachloride	0	0	0	0
Methyl ethyl ketone	34.38898	64.4519	64.61748	34.37835
Hydrogen Sulfide	0	0	0	0
Methyl mercaptan	0	0	0	0
Dimethyl sulfide	0	0	0	0
Dimethyl disulfide	0	0	0	0
Alpha pinene	0	0	0	0
Hydro Chloric Acid	0	0	0	0
Chlorine	0	0	0	0
Chlorine dioxide	0	0	0	0
Methyl chloride	0	0	0	0
Chloroform	0	0	0	0
1 Benz	0	0	0	0
Phenol	0	0	0	0
Dioxin	0	0	0	0
Furan	0	0	0	0
1,1,1-Trichloroetane	0	0	0	0
2,4,5-Trichlorophenol	0	0	0	0
PCP-EF	0	0	0	0
2,4,6-Trichlorophenol	0	0	0	0
Chlorophenol	0	0	0	0
Beta Pinene	0	0	0	0
Alpha Terpinol	0	0	0	0
Acrolein	1.29851	2.1	2.1	1.29851
Acetaldehyde	1.32032	2.1	2.1	1.32032
Propionaldehyde	0.79388	1.2	1.2	0.79388
DACETON-EF	0	0	0	0
Toluene	0.1923	6	6	0.1923
Hexane	0	0	0	0
Chloromethane	0	0	0	0
p-Cymene	0.00835	1	1	0.00835
p-Dichlorobenzene	0	0	0	0
Formaldehyde	3.66699	5.3	5.3	3.66699
Acetophenol	0	0	0	0
Dimethyltrisulfide	0	0	0	0
Carbon disulfide	0	0	0	0
Total HC	0	0	0	0
Other	100.8726	167.0261	168.0897	100.8043
Total HAP	100.8726	167.0261	168.0897	100.8043
Total VOC	100.881	253.0261	254.0897	161.878
TRS	0	0	0	0

B.12 REFERENCES

1. Roy F. Weston, Inc. Field Test Data Summary for Site 4. Prepared for the U.S. Environmental Protection Agency. Research Triangle Park, NC. December 1992.

2. Radian Corporation. Calculation Sheet, Job No. 239-026-60, Model Wastewater Flow Rates, Pulp and Paper NESHAP. Prepared for the U.S. Environmental Protection Agency. Research Triangle Park, NC. December 29, 1992.

3. Radian Corporation. Calculation Sheet, Job No. 239-026-60, Model Wastewater Collection and Treatment Plant for the Pulp and Paper Industry, Pulp and Paper NESHAP. Prepared for the U.S. Environmental Protection Agency. Research Triangle Park, NC. December 28, 1992.

4. Memorandum from Allen, C. Research Triangle Insitute, to Manning, E., EPA. Emission factors from wastewater collection and treatment system at pulp and paper mills. April 15, 1993.

5. Ref. 2.

6. Telecon. Conference call, Radian Corporation with U.S. Environmental Protection Agency. December 1992. Description of weak black liquor storage tanks at pulp and paper facilities.

7. U.S. EPA (Environmental Protection Agency). Environmental Pollution Control, Pulp and Paper Industry, Part I, Air. Publication No. EPA-625/7-76-001. Research Triangle Park, NC. 1976.

8. Memorandum from Gideon, L., and Olsen, T., Radian Corporation, to Lassiter, P., EPA/CPB. February 5, 1993. Emission factor and model process unit revisions for the pulp and paper NESHAP.

9. Memorandum from Olsen, T., Radian Corporation, to Lassiter, P., EPA/CPB. April 5, 1993. Totally chlorine free model process unit for the pulp and paper NESHAP.

10. Research Triangle Institute. Hazardous Waste Treatment, Storage, and Disposal Facilities: Air Emission Models. Draft Report. Prepared for U.S. Environmental Protection Agency, Office of Air Quality Planning and Standards. Research Triangle Park, NC. April 5, 1987.

11. Research Triangle Institute. Emission Factor Development for the Pulp and Paper NESHAP. Contract No. 68-D10118. Prepared for U.S. Environmental Protection Agency. Research Triangle Park, NC. October, 1993.

12. Ref. 11.

APPENDIX C

MODEL PROCESS UNITS

C.1 Pulping Model Process Units
C.2 Bleaching Model Process Units
C.3 Definition of Terms and References

APPENDIX C.1

PULPING MODEL PROCESS UNITS

This appendix presents emission points, emission factors, and vent and wastewater stream characteristics for each of the 18 pulping model process units (MPU's) presented in Chapter 4.0. The model process units are defined based on pulp type, wood type, digester type, washer type, and whether oxygen delignification is used (see following summary table). The following figures (P1-P18) represent the emission points associated with each model process. Tables following each figure identify the emission points within the model and the associated emission factors and process vent and wastewater stream characteristics of each emission point in the model process unit. These characteristics include:

- Flow rate factor; and
- Hazardous air pollutant concentration.

The assumptions and derivation of the emission factors are presented in Appendix B.

The following example presents how a model process unit would be assigned (or "mapped") to a pulp mill. Assuming a Kraft pulping mill with a batch line pulping hardwood (1,000 tons per day) and a continuous line pulping softwood (1,000 tons per day), two pulping model process units would be assigned to represent the two pulping lines. The batch, hardwood line utilizes a rotary vacuum drum brownstock washer and no oxygen delignification. Using the summary table as a guide, the batch process would be assigned model process unit P-1. The continuous line utilizes a diffusion washer and

oxygen delignification. Using the summary table as a guide, this process would be assigned model process unit P-12. Definition of terms and references are presented in Appendix C.3.

The emissions from either process may then be estimated using the appropriate figures and tables. For example, the methanol emissions from the Kraft batch process (Model P-1) rotary vacuum drum washer would be estimated using the following steps:

1. Identify emission point code (EP_CODE): for Model P-1, the code for the washer is 177;
2. Identify the associated emission point emission factor ("Compound"_EF): for methanol (MEOH_EP), the factor is 0.1 kg/Mg pulp;
3. Multiply factor by process line capacity:

$$\frac{0.1 \text{ Kg MeOH}}{\text{Mg Pulp}} \times \frac{1000 \text{ Ton Pulp}}{\text{Day}} \times \frac{1 \text{ Mg}}{1.1 \text{ Ton}} = \frac{90.9 \text{ Kg MeOH}}{\text{Day}}$$

4. Convert to annual emissions, assuming mill operates 350 days per year:

$$\frac{90.9 \text{ Kg MeOH}}{\text{Day}} \times \frac{350 \text{ Day}}{1 \text{ Year}} = \frac{31{,}800 \text{ Kg MeOH}}{\text{Year}}$$

SUMMARY TABLE OF PULPING MODEL PROCESS UNITS

Model process unit	Pulping type	Digestion type	Wood type	Chemical recovery	Washer type	Oxygen delignification (Yes or No)
P-1	Kraft	Batch	Hard	Kraft	Rotary drum	No
P-2	Kraft	Batch	Soft	Kraft	Rotary drum	No
P-3	Kraft	Continuous	Hard	Kraft	Improved washing	No
P-4	Kraft	Continuous	Hard	Kraft	Rotary drum	No
P-5	Kraft	Continuous	Soft	Kraft	Improved washing	No
P-6	Kraft	Continuous	Soft	Kraft	Rotary drum	No
P-7	Sulfite	NA[a]	Soft	Sulfite	Rotary drum	No
P-8	Sulfite	NA	Hard	Sulfite	Rotary drum	No
P-9	Semichem/kraft	NA	Soft	Kraft	Rotary drum	No
P-10	Semichem/kraft	NA	Soft	Sulfite	Rotary drum	No
P-11	Kraft	Continuous	Hard	Kraft	Improved washing	Yes
P-12	Kraft	Continuous	Soft	Kraft	Improved washing	Yes
P-13	Kraft	Batch	Hard	Kraft	Improved washing	Yes
P-14	Kraft	Batch	Soft	Kraft	Improved washing	Yes
P-15	Sulfite	Batch	Hard	Sulfite	Rotary drum	Yes
P-16	Sulfite	Batch	Soft	Sulfite	Rotary drum	Yes
P-17	Kraft	Batch	Hard	Kraft	Improved washing	No
P-18	Kraft	Batch	Soft	Kraft	Improved washing	No

[a] NA = Not applicable.

jlh.108c
c-tbl
4-16-93

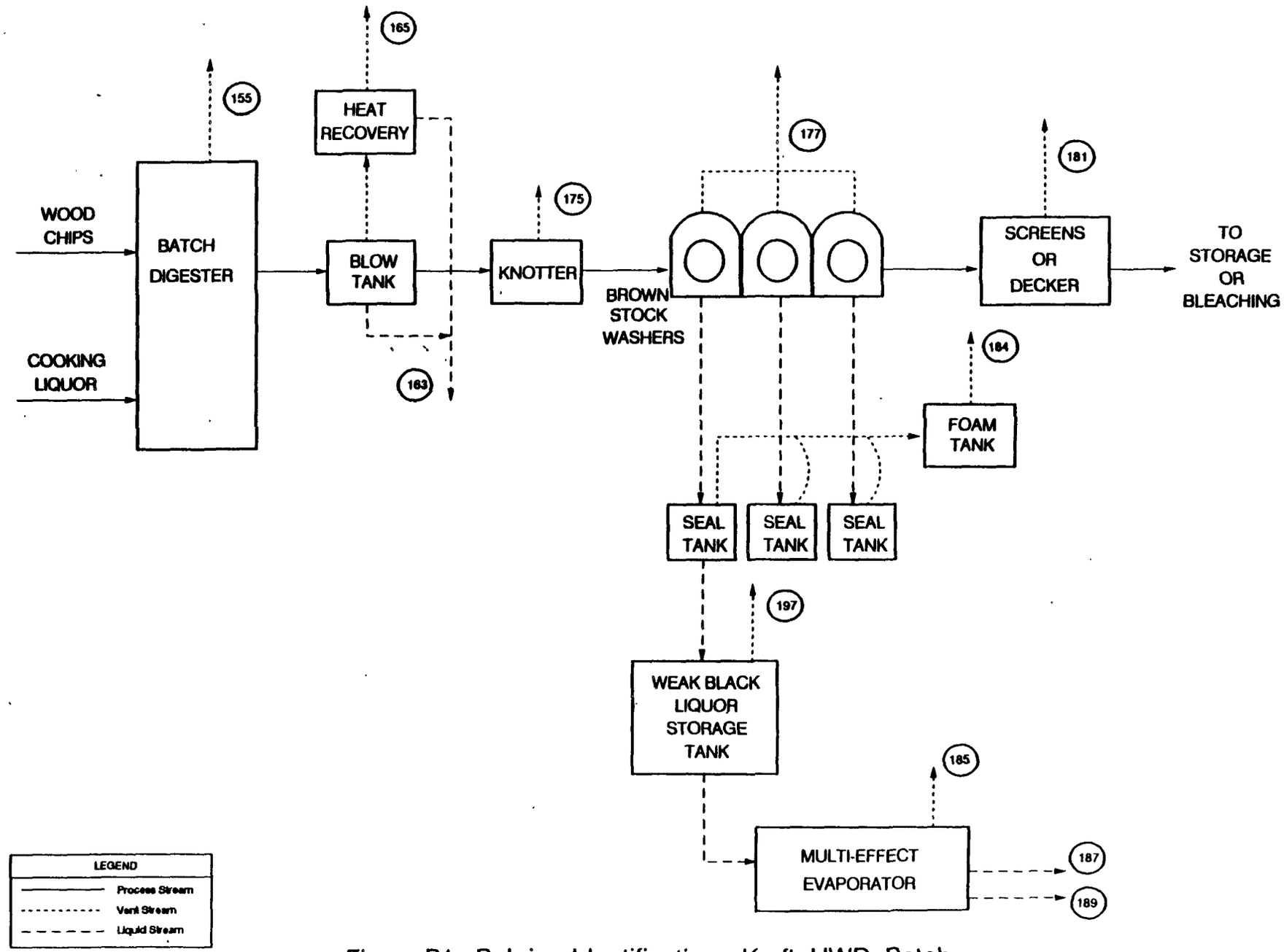

Figure P1. Pulping Identification - Kraft, HWD, Batch

Model P1 - Stream Characteristics

MPU_CODE	EP_CODE	SOURCE	PROC_TYPE	PULP_TYP	WOOD_TYP	ENCLOSURE	SOURCE_TYP	VFLO_FAC	SFLO_FAC	VHAP_CON	SHAP_CON	HAL_STATUS
P1	155	Digesters, relief gases	PULP	KRAFT	HARD		VENT	2.57E-3		8.69E+2		N
P1	163	Digesters, blow condensates	PULP	KRAFT	HARD		STREAM		1.40E+0		9.96E+2	N
P1	165	Digesters, blow gases	PULP	KRAFT	HARD		VENT	1.30E+0		4.18E+1		N
P1	175	Knotters, hood vent	PULP	KRAFT	HARD	1	VENT	9.00E-1		5.67E+1		N
P1	177	Washers, hood vent	PULP	KRAFT	HARD	3	VENT	9.00E-1		1.03E+2		N
P1	181	WASHERS, DECKERS/SCREENS	PULP	KRAFT	HARD	1	VENT	9.00E-1		2.03E+0		N
P1	184	Washers, foam tank	PULP	KRAFT	HARD		VENT	1.80E-1		5.96E+2		N
P1	185	Evaporators, vent	PULP	KRAFT	HARD		VENT	2.70E-3		4.13E+3		N
P1	187	Evaporators, condensates	PULP	KRAFT	HARD		STREAM		4.90E+0		1.46E+3	N
P1	189	Evaporators, surface cond. condensates	PULP	KRAFT	HARD		STREAM		4.20E+0		3.53E+2	N
P1	197	WEAK BLACK LIQUOR STORAGE TANK	PULP	KRAFT	HARD		VENT	2.74E-3		2.99E+4		N

Model P1 - Emission Factor Summary

MPU_CODE	EP_CODE	SOURCE	ACET_EF	MEOH_EF	CTET_EF	MEK_EF	PCDB_EF	FORM_EF	HCL_EF	CL2_EF	MECL_EF	CHCL3_EF	L_BENZ_EF	PHENL_EF	MCHCL3EF	TCP245EF
P1	155	Digesters, relief gases	6.40E-5	3.20E-3		8.00E-4		3.00E-5								
P1	163	Digesters, blow condensates	1.20E-3	5.90E-1		1.20E-3										
P1	165	Digesters, blow gases	1.52E-3	6.21E-3		2.41E-3		3.46E-4								
P1	175	Knotters, hood vent	5.06E-3	2.07E-2		8.04E-3		1.15E-3								
P1	177	Washers, hood vent	2.30E-2	1.00E-1		2.50E-2		5.00E-3								
P1	181	WASHERS, DECKERS/SCREENS	5.12E-4	2.23E-3		5.50E-4		1.11E-4								
P1	184	Washers, foam tank	3.80E-2	1.86E-1		7.27E-3		3.26E-3								
P1	185	Evaporators, vent	2.00E-4	2.00E-2		8.50E-4		4.00E-5								
P1	187	Evaporators, condensates	1.00E-2	3.00E+0		3.00E-2		5.00E-3								
P1	189	Evaporators, surface cond. condensates	2.50E-3	6.15E-1		6.90E-3		5.20E-3								
P1	197	WEAK BLACK LIQUOR STORAGE TANK	5.00E-4	1.00E-1		1.00E-3		2.00E-3								

MPU_CODE	EP_CODE	SOURCE	PCP_EF	ACROLEINEF	PROPAL_EF	TOLUENE_EF	CMETHANEEF	TCDD_EF	TCDF_EF	ACETOPHNEF	CARBDIS_EF	HEXANE_EF	TOTHAPEF	TOTVOCEF	TRS_EF
P1	155	Digesters, relief gases											4.20E-3	2.59E+0	2.62E+0
P1	163	Digesters, blow condensates											5.91E-1	8.59E-1	3.30E-1
P1	165	Digesters, blow gases		2.44E-4		4.24E-3				2.22E-3		8.50E-2	1.02E-1	4.37E+0	4.02E+0
P1	175	Knotters, hood vent		8.13E-4		6.00E-3				3.00E-3		5.10E-2	9.60E-2	8.14E-1	
P1	177	Washers, hood vent		3.00E-3		2.00E-3				1.00E-3	1.00E-3	1.70E-2	1.74E-1	1.90E+0	1.46E+0
P1	181	WASHERS, DECKERS/SCREENS		6.64E-5		2.53E-5				1.24E-5		5.43E-6	3.44E-3	9.06E-3	
P1	184	Washers, foam tank		1.42E-3	5.59E-4	2.31E-3						3.24E-5	2.02E-1	5.81E-1	2.20E-1
P1	185	Evaporators, vent											2.10E-2	5.39E+0	3.54E+0
P1	187	Evaporators, condensates			5.00E-4								3.04E+0	3.22E+0	5.25E-1
P1	189	Evaporators, surface cond. condensates		1.10E-4	1.50E-4								6.29E-1	7.10E-1	2.64E-1
P1	197	WEAK BLACK LIQUOR STORAGE TANK		1.00E-3	1.00E-5								1.54E-1	1.55E-1	

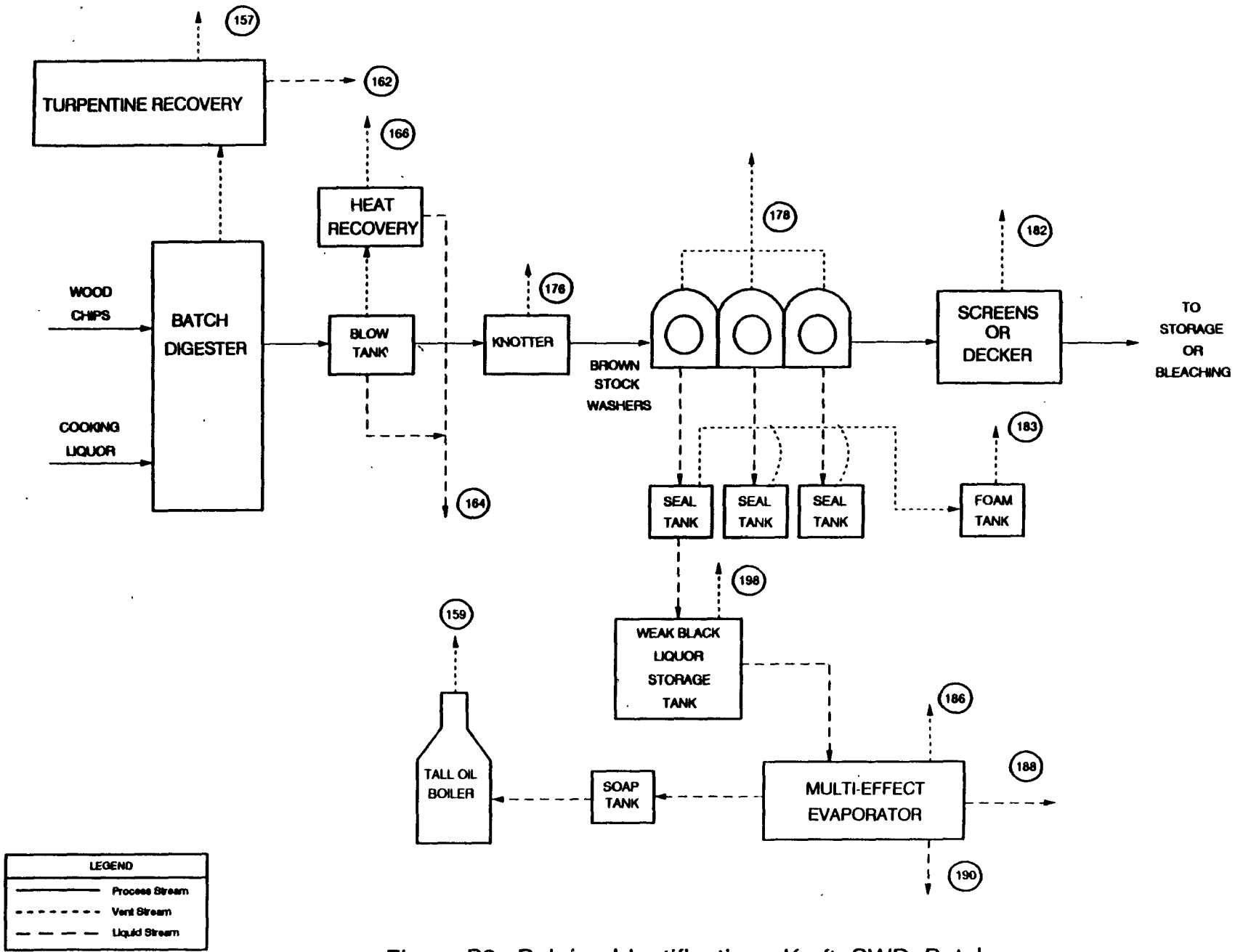

Figure P2. Pulping Identification - Kraft, SWD, Batch

Model P2 - Stream Characteristics

MPU_CODE	EP_CODE	SOURCE	PROC_TYPE	PULP_TYP	WOOD_TYP	ENCLOSURE	SOURCE_TYP	VFLO_FAC	SFLO_FAC	VHAP_CON	SHAP_CON	HAL_STATUS
P2	157	NCG System, turpentine condenser	PULP	KRAFT	SOFT		VENT	2.57E-3	1.10E-1	8.36E+2		N
P2	159	Tall Oil Recovery, batch vent	PULP	KRAFT	SOFT		VENT	7.64E-3				N
P2	162	NCG System, turpentine condensates	PULP	KRAFT	SOFT		STREAM		1.10E-1		1.08E+4	N
P2	164	Digesters, blow condensates	PULP	KRAFT	SOFT		STREAM		1.40E+0		1.76E+2	N
P2	166	Digesters, blow gases	PULP	KRAFT	SOFT		VENT	1.30E+0		1.61E-1		N
P2	176	Knotters, hood vent	PULP	KRAFT	SOFT	1	VENT	9.00E-1		3.42E+2		N
P2	178	Washers, hood vent	PULP	KRAFT	SOFT	3	VENT	9.00E-1		2.05E+2		N
P2	182	WASHERS, DECKERS/SCREENS	PULP	KRAFT	SOFT	1	VENT	9.00E-1		2.81E+0		N
P2	183	Washers, foam tank	PULP	KRAFT	SOFT		VENT	1.80E-1		5.60E+2		N
P2	186	Evaporators, vent	PULP	KRAFT	SOFT		VENT	2.70E-3		3.45E+2		N
P2	188	Evaporators, condensates	PULP	KRAFT	SOFT		STREAM		4.90E+0		8.21E+1	N
P2	190	Evaporators, surface cond. condensates	PULP	KRAFT	SOFT		STREAM		4.20E+0		2.19E+1	N
P2	198	WEAK BLACK LIQUOR STORAGE TANK	PULP	KRAFT	SOFT		VENT	2.74E-3		8.28E+3		N

Model P2 - Emission Factor Summary

MPU_CODE	EP_CODE	SOURCE	ACET_EF	MEOH_EF	CTET_EF	MEK_EF	PCDB_EF	FORM_EF	HCL_EF	CL2_EF	MECL_EF	CHCL3_EF	L_BENZ_EF	PHENL_EF	MCHCL3EF	TCP245EF
P2	157	NCG System, turpentine condenser	1.20E-4	3.20E-3		2.00E-4		8.00E-6								
P2	159	Tall Oil Recovery, batch vent														
P2	162	NCG System, turpentine condensates	4.00E-3	5.00E-1		2.00E-3		6.00E-5								
P2	164	Digesters, blow condensates	1.60E-3	1.00E-1		2.20E-3		1.00E-3								
P2	166	Digesters, blow gases	4.00E-5	2.40E-4		1.00E-4		1.70E-5								
P2	176	Knotters, hood vent	7.26E-3	3.11E-2		3.21E-3		6.91E-4								
P2	178	Washers, hood vent	3.30E-2	1.50E-1		1.00E-2		7.00E-3								
P2	182	WASHERS, DECKERS/SCREENS	7.35E-4	3.34E-3		2.20E-4		6.67E-5								
P2	183	Washers, foam tank	1.10E-2	1.76E-1		7.00E-3		2.00E-3								
P2	186	Evaporators, vent	7.00E-6	1.40E-3		6.00E-6		3.00E-5								
P2	188	Evaporators, condensates	3.90E-3	1.50E-1		7.70E-3		5.00E-3								
P2	190	Evaporators, surface cond. condensates	9.75E-4	3.08E-2		1.77E-3		5.20E-3								
P2	198	WEAK BLACK LIQUOR STORAGE TANK	1.00E-2	4.00E-2		1.00E-4		2.00E-3								

Model P2 - Emission Factor Summary

08/12/93

MPU_CODE	EP_CODE	SOURCE	PCP_EF	ACROLEINEF	PROPAL_EF	TOLUENE_EF	CMETHANEEF	TCDD_EF	TCDF_EF	ACETOPHNEF	CARBDIS_EF	HEXANE_EF	TOTHAPEF	TOTVOCEF	TRS_EF
P2	157	NCG System, turpentine condenser		5.00E-7									4.04E-3	4.11E+0	2.68E+0
P2	159	Tall Oil Recovery, batch vent												5.83E-3	1.02E-1
P2	162	NCG System, turpentine condensates		2.00E-6	2.20E-4								5.05E-1	9.74E-1	7.11E-2
P2	164	Digesters, blow condensates		3.00E-5	2.00E-4								1.04E-1	3.42E-1	2.32E-1
P2	166	Digesters, blow gases		1.00E-6									3.93E-4	3.97E+0	4.02E+0
P2	176	Knotters, hood vent		4.33E-4	1.38E-4	2.43E-1						3.00E-1	5.79E-1	2.61E+0	
P2	178	Washers, hood vent		1.60E-3	5.60E-4	8.10E-2						1.00E-1	3.47E 1	3.42E+0	2.11E+0
P2	182	WASHERS, DECKERS/SCREENS		3.54E-5	1.24E-5	1.02E-3						3.20E-5	4.75E-3	2.34E-2	
P2	183	Washers, foam tank		7.00E-5	4.00E-4	4.00E-4							1.89E-1	1.62E+0	2.20E-1
P2	186	Evaporators, vent		3.00E-4									1.75E-3	3.07E+0	3.54E+0
P2	188	Evaporators, condensates		2.00E-3	2.00E-3								1.71E-1	5.42E-1	5.25E-1
P2	190	Evaporators, surface cond. condensates			6.00E-4								3.91E-2	1.10E-1	2.64E-1
P2	198	WEAK BLACK LIQUOR STORAGE TANK		2.00E-5	4.00E-4								4.27E-2	6.87E-2	

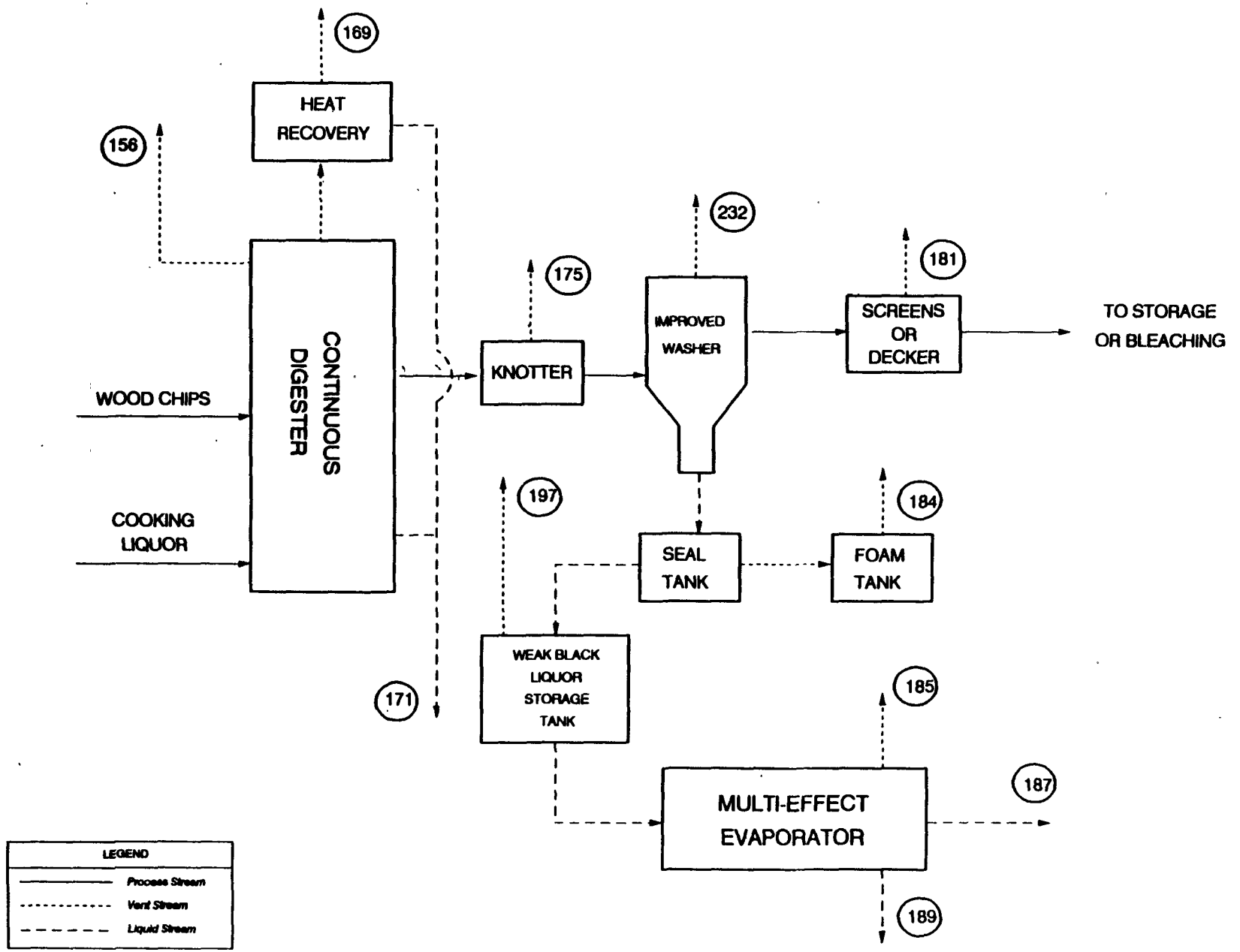

Figure P3. Pulping Identification - Kraft, HWD, Continuous, Improved Washing

Model P3 - Stream Characteristics

MPU_CODE	EP_CODE	SOURCE	PROC_TYPE	PULP_TYP	WOOD_TYP	ENCLOSURE	SOURCE_TYP	VFLO_FAC	SFLO_FAC	VHAP_CON	SHAP_CON	HAL_STATUS
P3	156	Digesters, relief gases	PULP	KRAFT	HARD		VENT	2.60E-3		8.59E+2		N
P3	169	Digesters, blow gases	PULP	KRAFT	HARD		VENT	2.60E-2		2.06E+3		N
P3	171	Digesters, blow condensates	PULP	KRAFT	HARD		STREAM		6.90E-1		2.12E+3	N
P3	175	Knotters, hood vent	PULP	KRAFT	HARD	1	VENT	9.00E-1		5.67E+1		N
P3	181	WASHERS, DECKERS/SCREENS	PULP	KRAFT	HARD	1	VENT	9.00E-1		2.03E+0		N
P3	184	Washers, foam tank	PULP	KRAFT	HARD		VENT	1.80E-1		5.96E+2		N
P3	185	Evaporators, vent	PULP	KRAFT	HARD		VENT	2.70E-3		4.13E+3		N
P3	187	Evaporators, condensates	PULP	KRAFT	HARD		STREAM		4.90E+0		1.46E+3	N
P3	189	Evaporators, surface cond. condensates	PULP	KRAFT	HARD		STREAM		4.20E+0		3.53E+2	N
P3	197	WEAK BLACK LIQUOR STORAGE TANK	PULP	KRAFT	HARD		VENT	2.74E-3		2.99E+4		N
P3	232	Washers, hood vent	PULP	KRAFT	HARD		VENT	2.74E-2		5.47E+2		N

Model P3 - Emission Factor Summary

MPU_CODE	EP_CODE	SOURCE	ACET_EF	MEOH_EF	CTET_EF	MEK_EF	PCDB_EF	FORM_EF	HCL_EF	CL2_EF	MECL_EF	CHCL3_EF	L_BENZ_EF	PHENL_EF	MCHCL3EF	TCP245EF
P3	156	Digesters, relief gases	6.40E-5	3.20E-3		8.00E-4		3.00E-5								
P3	169	Digesters, blow gases	1.00E-3	9.10E-2		7.00E-3		5.00E-4								
P3	171	Digesters, blow condensates	2.90E-3	5.90E-1		2.20E-2		1.70E-3								
P3	175	Knotters, hood vent	5.06E-3	2.07E-2		8.04E-3		1.15E-3								
P3	181	WASHERS, DECKERS/SCREENS	5.12E-4	2.23E-3		5.50E-4		1.11E-4								
P3	184	Washers, foam tank	3.80E-2	1.86E-1		7.27E-3		3.26E-3								
P3	185	Evaporators, vent	2.00E-4	2.00E-2		8.50E-4		4.00E-5								
P3	187	Evaporators, condensates	1.00E-2	3.00E+0		3.00E-2		5.00E-3								
P3	189	Evaporators, surface cond. condensates	2.50E-3	6.15E-1		6.90E-3		5.20E-3								
P3	197	WEAK BLACK LIQUOR STORAGE TANK	5.00E-4	1.00E-1		1.00E-3		2.00E-3								
P3	232	Washers, hood vent	1.50E-3	2.80E-2		2.00E-4		1.00E-5								

MPU_CODE	EP_CODE	SOURCE	PCP_EF	ACROLEINEF	PROPAL_EF	TOLUENE_EF	CMETHANEEF	TCDD_EF	TCDF_EF	ACETOPHNEF	CARBDIS_EF	HEXANE_EF	TOTHAPEF	TOTVOCEF	TRS_EF
P3	156	Digesters, relief gases											4.20E-3	2.61E+0	2.68E+0
P3	169	Digesters, blow gases			1.84E-4								1.01E-1	2.42E+0	2.37E+0
P3	171	Digesters, blow condensates											6.21E-1	1.20E+0	3.30E-1
P3	175	Knotters, hood vent		8.13E-4		6.00E-3				3.00E-3		5.10E-2	9.60E-2	8.14E-1	
P3	181	WASHERS, DECKERS/SCREENS		6.64E-5		2.53E-5				1.24E-5		5.43E-6	3.44E-3	9.06E-3	
P3	184	Washers, foam tank		1.42E-3	5.59E-4	2.31E-3						3.24E-5	2.02E-1	5.81E-1	2.20E-1
P3	185	Evaporators, vent											2.10E-2	5.39E+0	3.54E+0
P3	187	Evaporators, condensates			5.00E-4								3.04E+0	3.22E+0	5.25E-1
P3	189	Evaporators, surface cond. condensates		1.10E-4	1.50E-4								6.29E-1	7.10E-1	2.64E-1
P3	197	WEAK BLACK LIQUOR STORAGE TANK		1.00E-3	1.00E-5								1.54E-1	1.55E-1	
P3	232	Washers, hood vent		4.00E-8	5.00E-7								2.82E-2	2.38E+0	2.11E+0

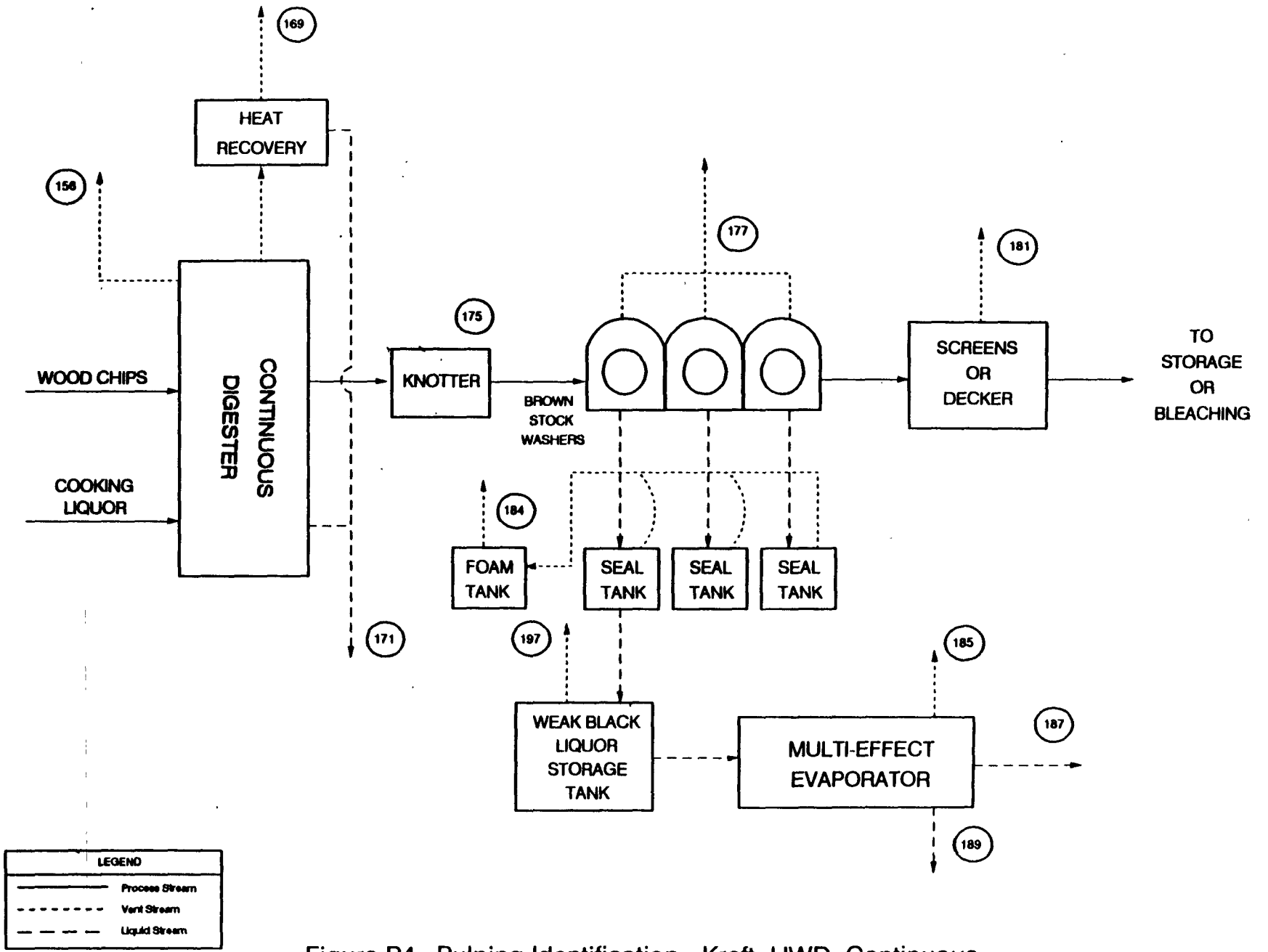

Figure P4. Pulping Identification - Kraft, HWD, Continuous

Model P4 - Stream Characteristics

MPU_CODE	EP_CODE	SOURCE	PROC_TYPE	PULP_TYP	WOOD_TYP	ENCLOSURE	SOURCE_TYP	VFLO_FAC	SFLO_FAC	VHAP_CON	SHAP_CON	HAL_STATUS
P4	156	Digesters, relief gases	PULP	KRAFT	HARD		VENT	2.60E-3		8.59E+2		N
P4	169	Digesters, blow gases	PULP	KRAFT	HARD		VENT	2.60E-2		2.06E+3		N
P4	171	Digesters, blow condensates	PULP	KRAFT	HARD		STREAM		6.90E-1		2.12E+3	N
P4	175	Knotters, hood vent	PULP	KRAFT	HARD	1	VENT	9.00E-1		5.67E+1		N
P4	177	Washers, hood vent	PULP	KRAFT	HARD	3	VENT	9.00E-1		1.03E+2		N
P4	181	WASHERS, DECKERS/SCREENS	PULP	KRAFT	HARD	1	VENT	9.00E-1		2.03E+0		N
P4	184	Washers, foam tank	PULP	KRAFT	HARD		VENT	1.80E-1		5.96E+2		N
P4	185	Evaporators, vent	PULP	KRAFT	HARD		VENT	2.70E-3		4.13E+3		N
P4	187	Evaporators, condensates	PULP	KRAFT	HARD		STREAM		4.90E+0		1.46E+3	N
P4	189	Evaporators, surface cond. condensates	PULP	KRAFT	HARD		STREAM		4.20E+0		3.53E+2	N
P4	197	WEAK BLACK LIQUOR STORAGE TANK	PULP	KRAFT	HARD		VENT	2.74E-3		2.99E+4		N

Model P4 - Emission Factor Summary

MPU_CODE	EP_CODE	SOURCE	ACET_EF	MEOH_EF	CTET_EF	MEK_EF	PCDB_EF	FORM_EF	HCL_EF	CL2_EF	MECL_EF	CHCL3_EF	L_BENZ_EF	PHENL_EF	MCHCL3EF	TCP245EF
P4	156	Digesters, relief gases	6.40E-5	3.20E-3		8.00E-4		3.00E-5								
P4	169	Digesters, blow gases	1.00E-3	9.10E-2		7.00E-3		5.00E-4								
P4	171	Digesters, blow condensates	2.90E-3	5.90E-1		2.20E-2		1.70E-3								
P4	175	Knotters, hood vent	5.06E-3	2.07E-2		8.04E-3		1.15E-3								
P4	177	Washers, hood vent	2.30E-2	1.00E-1		2.50E-2		5.00E-3								
P4	181	WASHERS, DECKERS/SCREENS	5.12E-4	2.23E-3		5.50E-4		1.11E-4								
P4	184	Washers, foam tank	3.80E-2	1.86E-1		7.27E-3		3.26E-3								
P4	185	Evaporators, vent	2.00E-4	2.00E-2		8.50E-4		4.00E-5								
P4	187	Evaporators, condensates	1.00E-2	3.00E+0		3.00E-2		5.00E-3								
P4	189	Evaporators, surface cond. condensates	2.50E-3	6.15E-1		6.90E-3		5.20E-3								
P4	197	WEAK BLACK LIQUOR STORAGE TANK	5.00E-4	1.00E-1		1.00E-3		2.00E-3								

MPU_CODE	EP_CODE	SOURCE	PCP_EF	ACROLEINEF	PROPAL_EF	TOLUENE_EF	CMETHANEEF	TCDD_EF	TCDF_EF	ACETOPHNEF	CARBDIS_EF	HEXANE_EF	TOTHAPEF	TOTVOCEF	TRS_EF
P4	156	Digesters, relief gases											4.20E-3	2.61E+0	2.68E+0
P4	169	Digesters, blow gases			1.84E-4								1.01E-1	2.42E+0	2.37E+0
P4	171	Digesters, blow condensates											6.21E-1	1.20E+0	3.30E-1
P4	175	Knotters, hood vent		8.13E-4		6.00E-3				3.00E-3		5.10E-2	9.60E-2	8.14E-1	
P4	177	Washers, hood vent		3.00E-3		2.00E-3				1.00E-3	1.00E-3	1.70E-2	1.74E-1	1.90E+0	1.46E+0
P4	181	WASHERS, DECKERS/SCREENS		6.64E-5		2.53E-5				1.24E-5		5.43E-6	3.44E-3	9.06E-3	
P4	184	Washers, foam tank		1.42E-3	5.59E-4	2.31E-3						3.24E-5	2.02E-1	5.81E-1	2.20E-1
P4	185	Evaporators, vent											2.10E-2	5.39E+0	3.54E+0
P4	187	Evaporators, condensates			5.00E-4								3.04E+0	3.22E+0	5.25E-1
P4	189	Evaporators, surface cond. condensates		1.10E-4	1.50E-4								6.29E-1	7.10E-1	2.64E-1
P4	197	WEAK BLACK LIQUOR STORAGE TANK		1.00E-3	1.00E-5								1.54E-1	1.55E-1	

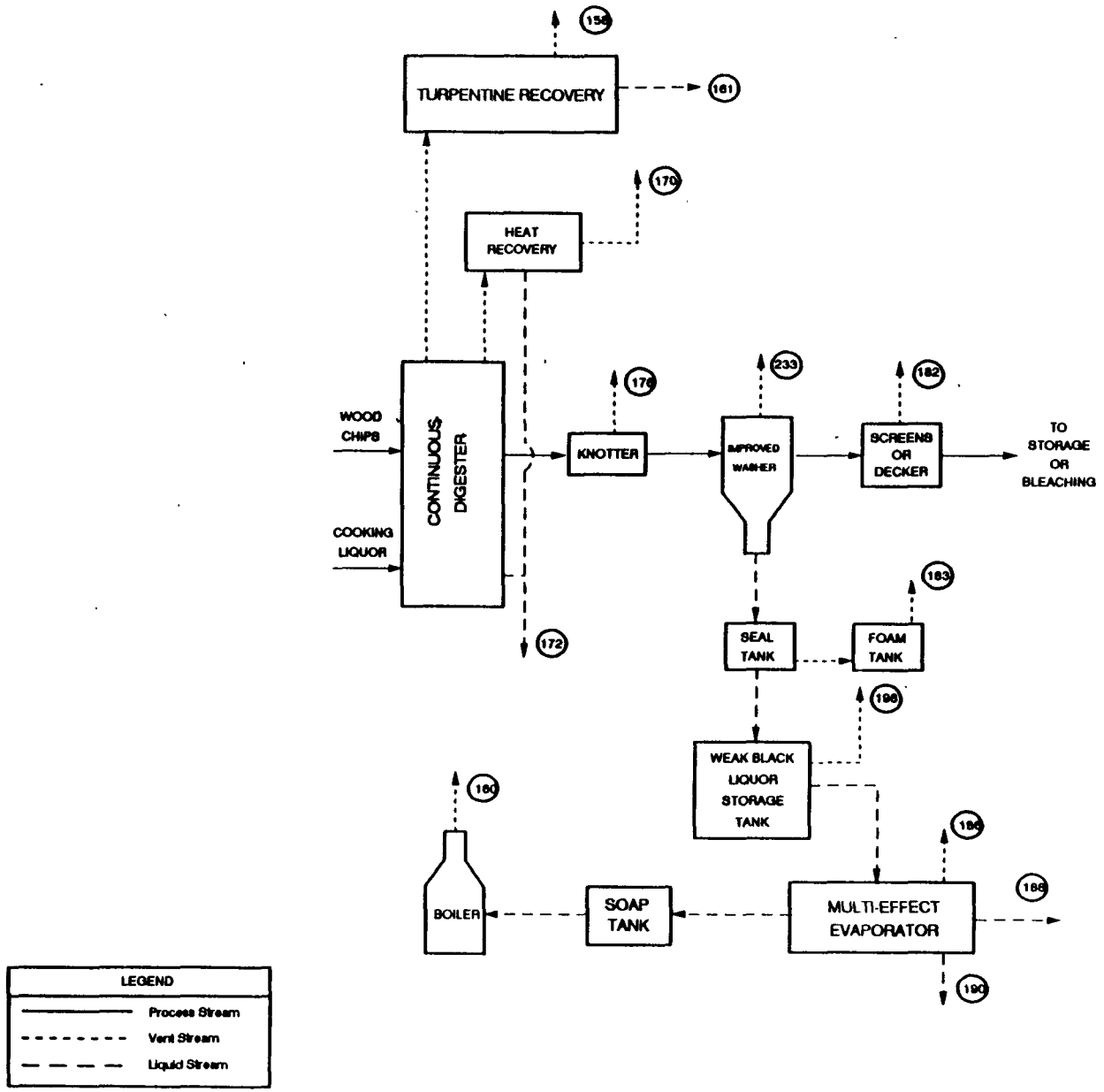

Figure P5. Pulping Identification - Kraft, SWD, Continuous, Improved Washing

Model P5 - Stream Characteristics

MPU_CODE	EP_CODE	SOURCE	PROC_TYPE	PULP_TYP	WOOD_TYP	ENCLOSURE	SOURCE_TYP	VFLO_FAC	SFLO_FAC	VHAP_CON	SHAP_CON	HAL_STATUS
P5	158	NCG System, cont. turpentine condenser	PULP	KRAFT	SOFT		VENT	2.60E-3	1.10E-1	8.26E+2		N
P5	160	Tall Oil Recovery, continuous vent	PULP	KRAFT	SOFT		VENT	6.90E-5				N
P5	161	NCG System, turpentine condensates	PULP	KRAFT	SOFT		STREAM		1.10E-1		1.08E+4	N
P5	170	Digesters, blow gases	PULP	KRAFT	SOFT		VENT	2.60E-2		7.16E+1		N
P5	172	Digesters, blow condensates	PULP	KRAFT	SOFT		STREAM		6.90E-1		1.27E+3	N
P5	176	Knotters, hood vent	PULP	KRAFT	SOFT	1	VENT	9.00E-1		3.42E+2		N
P5	182	WASHERS, DECKERS/SCREENS	PULP	KRAFT	SOFT	1	VENT	9.00E-1		2.81E+0		N
P5	183	Washers, foam tank	PULP	KRAFT	SOFT		VENT	1.80E-1		5.60E+2		N
P5	186	Evaporators, vent	PULP	KRAFT	SOFT		VENT	2.70E-3		3.45E+2		N
P5	188	Evaporators, condensates	PULP	KRAFT	SOFT		STREAM		4.90E+0		8.21E+1	N
P5	190	Evaporators, surface cond. condensates	PULP	KRAFT	SOFT		STREAM		4.20E+0		2.19E+1	N
P5	198	WEAK BLACK LIQUOR STORAGE TANK	PULP	KRAFT	SOFT		VENT	2.74E-3		8.28E+3		N
P5	233	Washers, hood vent	PULP	KRAFT	SOFT		VENT	2.74E-2		5.47E+2		N

Model P5 - Emission Factor Summary

MPU_CODE	EP_CODE	SOURCE	ACET_EF	MEOH_EF	CTET_EF	MEK_EF	PCDB_EF	FORM_EF	HCL_EF	CL2_EF	MECL_EF	CHCL3_EF	L_BENZ_EF	PHENL_EF	MCHCL3EF	TCP245EF
P5	158	NCG System, cont. turpentine condenser	1.20E-4	3.20E-3		2.00E-4		8.00E-6								
P5	160	Tall Oil Recovery, continuous vent														
P5	161	NCG System, turpentine condensates	4.00E-3	5.00E-1		2.00E-3		6.00E-5								
P5	170	Digesters, blow gases	1.60E-4	3.00E-3		1.00E-4		1.70E-7								
P5	172	Digesters, blow condensates	4.30E-3	3.46E-1		1.40E-2		4.40E-4								
P5	176	Knotters, hood vent	7.26E-3	3.11E-2		3.21E-3		6.91E-4								
P5	182	WASHERS, DECKERS/SCREENS	7.35E-4	3.34E-3		2.20E-4		6.67E-5								
P5	183	Washers, foam tank	1.10E-2	1.76E-1		7.00E-3		2.00E-3								
P5	186	Evaporators, vent	7.00E-6	1.40E-3		6.00E-6		3.00E-5								
P5	188	Evaporators, condensates	3.90E-3	1.50E-1		7.70E-3		5.00E-3								
P5	190	Evaporators, surface cond. condensates	9.75E-4	3.08E-2		1.77E-3		5.20E-3								
P5	198	WEAK BLACK LIQUOR STORAGE TANK	1.00E-2	4.00E-2		1.00E-4		2.00E-3								
P5	233	Washers, hood vent	1.50E-3	2.80E-2		2.00E-4		1.00E-5								

MPU_CODE	EP_CODE	SOURCE	PCP_EF	ACROLEINEF	PROPAL_EF	TOLUENE_EF	CMETHANEEF	TCDD_EF	TCDF_EF	ACETOPHNEF	CARBDIS_EF	HEXANE_EF	TOTHAPEF	TOTVOCEF	TRS_EF
P5	158	NCG System, cont. turpentine condenser		5.00E-7									4.04E-3	4.11E+0	2.68E+0
P5	160	Tall Oil Recovery, continuous vent												5.83E-3	1.02E-1
P5	161	NCG System, turpentine condensates		2.00E-6	2.20E-4								5.05E-1	9.74E-1	7.11E-2
P5	170	Digesters, blow gases		6.00E-7		1.00E-7							3.50E-3	4.91E+0	2.37E+0
P5	172	Digesters, blow condensates		1.30E-5	2.20E-3								3.72E-1	6.78E-1	3.30E-1
P5	176	Knotters, hood vent		4.33E-4	1.38E-4	2.43E-1						3.00E-1	5.79E-1	2.61E+0	
P5	182	WASHERS, DECKERS/SCREENS		3.54E-5	1.24E-5	1.02E-3						3.20E-5	4.75E-3	2.34E-2	
P5	183	Washers, foam tank		7.00E-5	4.00E-4	4.00E-4							1.89E-1	1.62E+0	2.20E-1
P5	186	Evaporators, vent		3.00E-4									1.75E-3	3.07E+0	3.54E+0
P5	188	Evaporators, condensates		2.00E-3	2.00E-3								1.71E-1	5.42E-1	5.25E-1
P5	190	Evaporators, surface cond. condensates			6.00E-4								3.91E-2	1.10E-1	2.64E-1
P5	198	WEAK BLACK LIQUOR STORAGE TANK		2.00E-5	4.00E-4								4.27E-2	6.87E-2	
P5	233	Washers, hood vent		4.00E-8	5.00E-7								2.82E-2	2.38E+0	2.11E+0

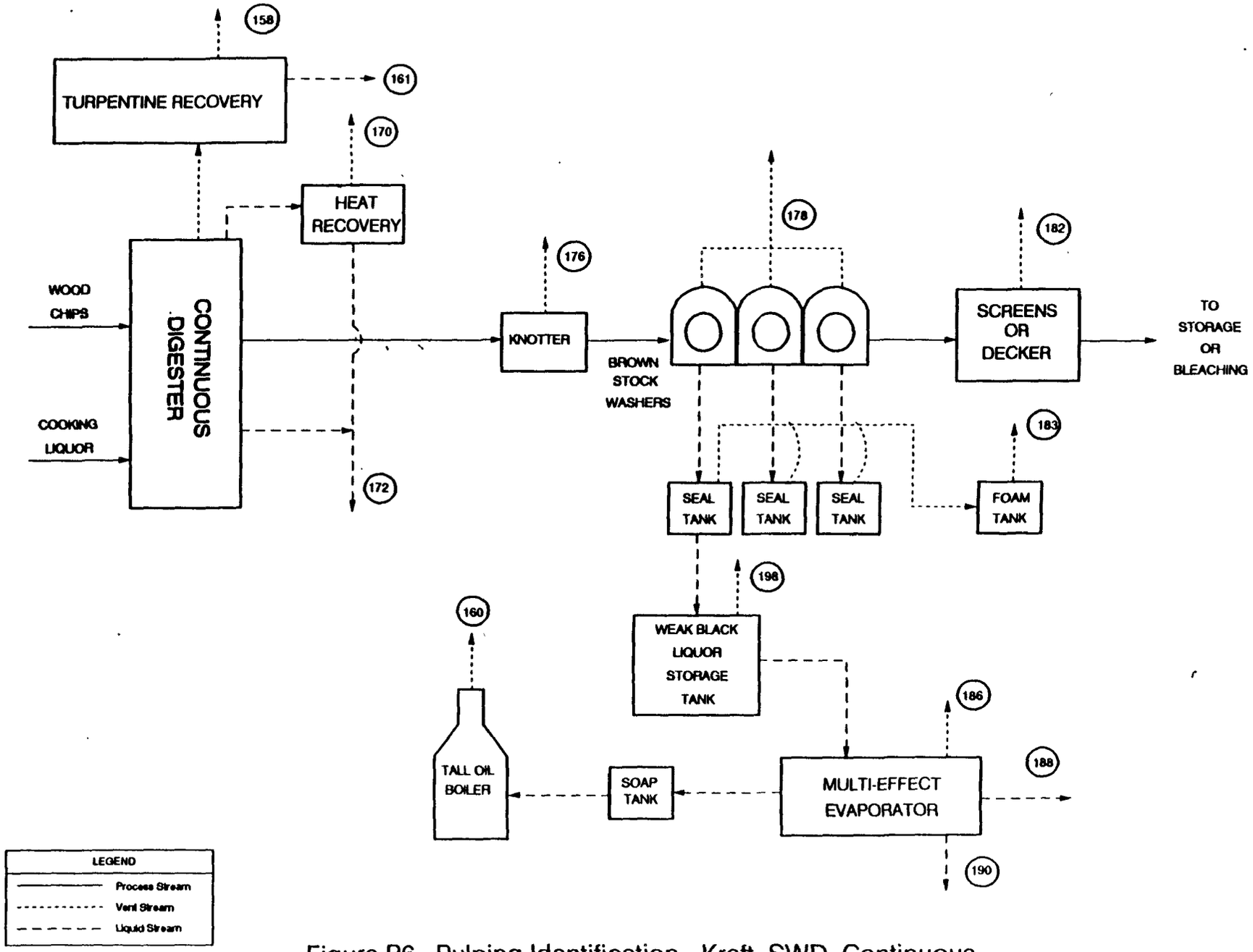

Figure P6. Pulping Identification - Kraft, SWD, Continuous

Model P6 Stream Characteristics

MPU_CODE	EP_CODE	SOURCE	PROC_TYPE	PULP_TYP	WOOD_TYP	ENCLOSURE	SOURCE_TYP	VFLO_FAC	SFLO_FAC	VHAP_CON	SHAP_CON	HAL_STATUS
P6	158	NCG System, cont. turpentine condenser	PULP	KRAFT	SOFT		VENT	2.60E-3	1.10E-1	8.26E+2		N
P6	160	Tall Oil Recovery, continuous vent	PULP,	KRAFT	SOFT		VENT	6.90E-5				N
P6	161	NCG System, turpentine condensates	PULP	KRAFT	SOFT		STREAM		1.10E-1		1.08E+4	N
P6	170	Digesters, blow gases	PULP	KRAFT	SOFT		VENT	2.60E-2		7.16E+1		N
P6	172	Digesters, blow condensates	PULP	KRAFT	SOFT		STREAM		6.90E-1		1.27E+3	N
P6	176	Knotters, hood vent	PULP	KRAFT	SOFT	1	VENT	9.00E-1		3.42E+2		N
P6	178	Washers, hood vent	PULP	KRAFT	SOFT	3	VENT	9.00E-1		2.05E+2		N
P6	182	WASHERS, DECKERS/SCREENS	PULP	KRAFT	SOFT	1	VENT	9.00E-1		2.81E+0		N
P6	183	Washers, foam tank	PULP	KRAFT	SOFT		VENT	1.80E-1		5.60E+2		N
P6	186	Evaporators, vent	PULP	KRAFT	SOFT		VENT	2.70E-3		3.45E+2		N
P6	188	Evaporators, condensates	PULP	KRAFT	SOFT		STREAM		4.90E+0		8.21E+1	N
P6	190	Evaporators, surface cond. condensates	PULP	KRAFT	SOFT		STREAM		4.20E+0		2.19E+1	N
P6	198	WEAK BLACK LIQUOR STORAGE TANK	PULP	KRAFT	SOFT		VENT	2.74E-3		8.28E+3		N

Model P6 - Emission Factor Summary

MPU_CODE	EP_CODE	SOURCE	ACET_EF	MEOH_EF	CTET_EF	MEK_EF	PCDB_EF	FORM_EF	HCL_EF	CL2_EF	MECL_EF	CHCL3_EF	L_BENZ_EF	PHENL_EF	MCHCL3EF	TCP245EF
P6	158	NCG System, cont. turpentine condenser	1.20E-4	3.20E-3		2.00E-4		8.00E-6								
P6	160	Tall Oil Recovery, continuous vent														
P6	161	NCG System, turpentine condensates	4.00E-3	5.00E-1		2.00E-3		6.00E-5								
P6	170	Digesters, blow gases	1.60E-4	3.00E-3		1.00E-4		1.70E-7								
P6	172	Digesters, blow condensates	4.30E-3	3.46E-1		1.40E-2		4.40E-4								
P6	176	Knotters, hood vent	7.26E-3	3.11E-2		3.21E-3		6.91E-4								
P6	178	Washers, hood vent	3.30E-2	1.50E-1		1.00E-2		3.00E-3								
P6	182	WASHERS, DECKERS/SCREENS	7.35E-4	3.34E-3		2.20E-4		6.67E-5								
P6	183	Washers, foam tank	1.10E-2	1.76E-1		7.00E-3		2.00E-3								
P6	186	Evaporators, vent	7.00E-6	1.40E-3		6.00E-6		3.00E-5								
P6	188	Evaporators, condensates	3.90E-3	1.50E-1		7.70E-3		5.00E-3								
P6	190	Evaporators, surface cond. condensates	9.75E-4	3.08E-2		1.77E-3		5.20E-3								
P6	198	WEAK BLACK LIQUOR STORAGE TANK	1.00E-2	4.00E-2		1.00E-4		2.00E-3								

Model P6 - Emission Factor Summary

08/12/93

MPU_CODE	EP_CODE	SOURCE	PCP_EF	ACROLEINEF	PROPAL_EF	TOLUENE_EF	CMETHANEEF	TCDD_EF	TCDF_EF	ACETOPHNEF	CARBDIS_EF	HEXANE_EF	TOTHAPEF	TOTVOCEF	TRS_EF
P6	158	NCG System, cont. turpentine condenser		5.00E-7									4.04E-3	4.11E+0	2.68E+0
P6	160	Tall Oil Recovery, continuous vent												5.83E-3	1.02E-1
P6	161	NCG System, turpentine condensates		2.00E-6	2.20E-4								5.05E-1	9.74E-1	7.11E-2
P6	170	Digesters, blow gases		6.00E-7		1.00E-7							3.50E-3	4.91E+0	2.37E+0
P6	172	Digesters, blow condensates		1.30E-5	2.20E-3								3.72E-1	6.78E-1	3.30E-1
P6	176	Knotters, hood vent		4.33E-4	1.38E-4	2.43E-1						3.00E-1	5.79E-1	2.61E+0	
P6	178	Washers, hood vent		1.60E-3	5.60E-4	8.10E-2						1.00E-1	3.47E 1	3.42E+0	2.11E+0
P6	182	WASHERS, DECKERS/SCREENS		3.54E-5	1.24E-5	1.02E-3						3.20E-5	4.75E-3	2.34E-2	
P6	183	Washers, foam tank		7.00E-5	4.00E-4	4.00E-4							1.89E-1	1.62E+0	2.20E-1
P6	186	Evaporators, vent		3.00E-4									1.75E 3	3.07E+0	3.54E+0
P6	188	Evaporators, condensates		2.00E-3	2.00E-3								1.71E-1	5.42E-1	5.25E-1
P6	190	Evaporators, surface cond. condensates			6.00E-4								3.91E-2	1.10E-1	2.64E-1
P6	198	WEAK BLACK LIQUOR STORAGE TANK		2.00E-5	4.00E-4								4.27E-2	6.87E-2	

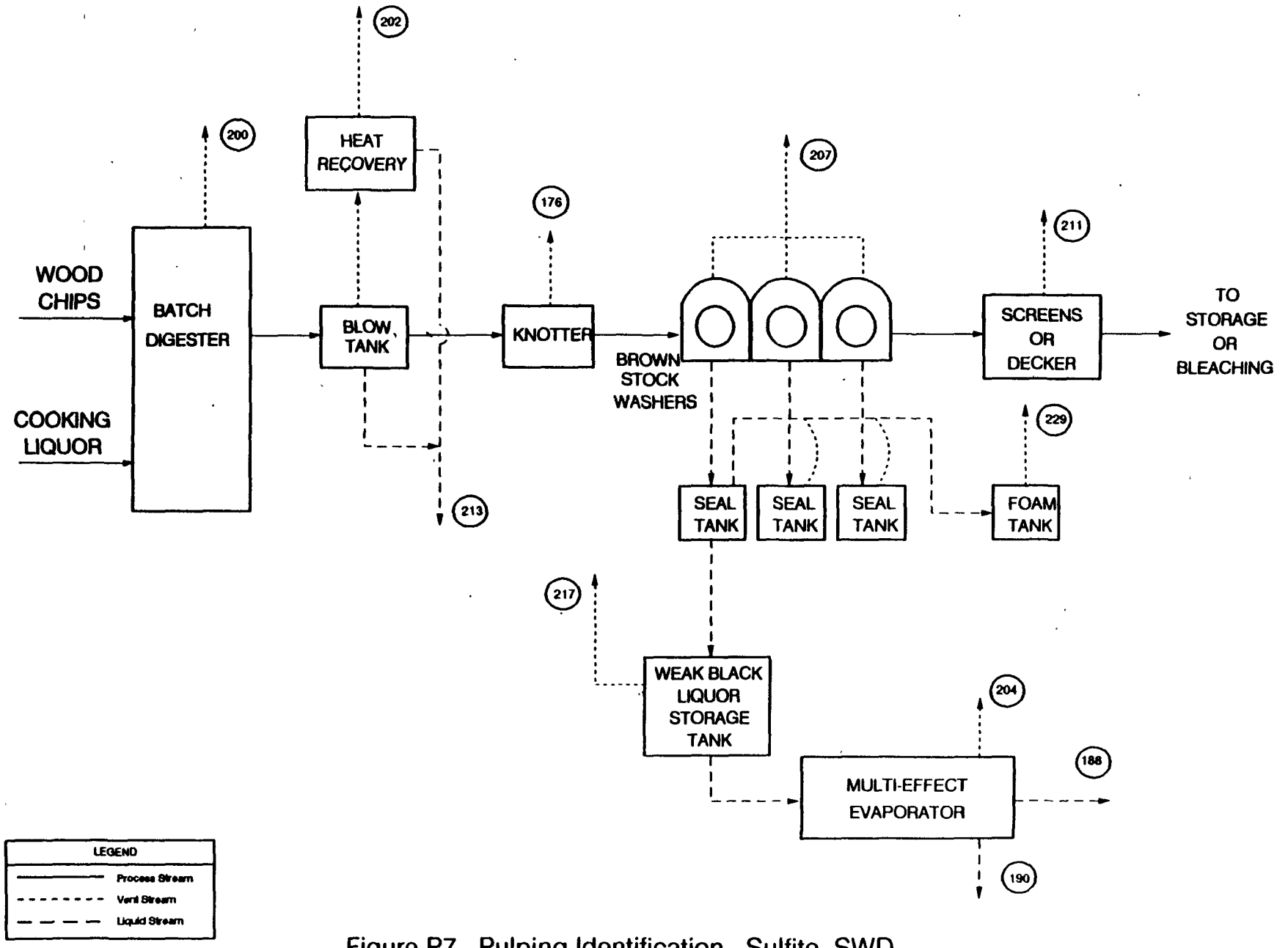

Figure P7. Pulping Identification - Sulfite, SWD

Model P7 - Stream Characteristics

MPU_CODE	EP_CODE	SOURCE	PROC_TYPE	PULP_TYP	WOOD_TYP	ENCLOSURE	SOURCE_TYP	VFLO_FAC	SFLO_FAC	VHAP_CON	SHAP_CON	HAL_STATUS
P7	176	KNOTTER, VENT	PULP	SULFITE	SOFT	1	VENT	9.00E-1		3.42E+2		N
P7	188	EVAPORATORS, CONDENSATES	PULP	SULFITE	SOFT		STREAM		4.90E+0		8.21E+1	N
P7	190	EVAPORATORS, SURFACE COND. CONDENSATES	PULP	SULFITE	SOFT		STREAM		4.20E+0		2.19E+1	N
P7	200	DIGESTERS, RELIEF GASES	PULP	SULFITE	SOFT		VENT	2.57E-3		4.65E+3		N
P7	202	DIGESTERS, BLOW GASES	PULP	SULFITE	SOFT		VENT	1.30E+0		2.91E+1		N
P7	204	EVAPORATORS, MULTI EFFECT EVAP. VENT	PULP	SULFITE	SOFT		VENT	2.70E-3		3.45E+2		N
P7	207	WASHER, HOOD VENT	PULP	SULFITE	SOFT	3	VENT	9.00E-1		1.30E+2		N
P7	211	WASHER, DECKER VENT	PULP	SULFITE	SOFT	1	VENT	9.00E-1		1.33E+1		N
P7	213	DIGESTER, BLOW CONDENSATES	PULP	SULFITE	SOFT		STREAM		1.40E+0		9.06E+1	N
P7	217	WEAK BLACK LIQUOR STORAGE TANK VENT	PULP	SULFITE	SOFT		VENT	2.74E-3		5.95E+4		N
P7	229	WASHER, FOAM TANK VENT	PULP	SULFITE	SOFT		VENT	1.80E-1		5.52E+1		N

Model P7 - Emission Factor Summary

MPU_CODE	EP_CODE	SOURCE	ACET_EF	MEOH_EF	CTET_EF	MEK_EF	PCDB_EF	FORM_EF	HCL_EF	CL2_EF	MECL_EF	CHCL3_EF	L_BENZ_EF	PHENL_EF	MCHCL3EF	TCP245EF
P7	176	KNOTTER, VENT	7.26E-3	3.11E-2		3.21E-3		6.91E-4								
P7	188	EVAPORATORS, CONDENSATES	3.90E-3	1.50E-1		7.70E-3		5.00E-3								
P7	190	EVAPORATORS, SURFACE COND. CONDENSATES	9.75E-4	3.08E-2		1.77E-3		5.20E-3								
P7	200	DIGESTERS, RELIEF GASES	1.98E-4	1.18E-2		2.89E-4		6.91E-5								
P7	202	DIGESTERS, BLOW GASES	5.00E-4	7.00E-2		4.00E-5		4.00E-6								
P7	204	EVAPORATORS, MULTI EFFECT EVAP. VENT	7.00E-6	1.40E-3		6.00E-6		3.00E-5								
P7	207	WASHER, HOOD VENT	3.00E-3	1.90E-1		3.00E-3		1.00E-3								
P7	211	WASHER, DECKER VENT	1.98E-4	1.18E-2		2.89E-4		6.91E-5								
P7	213	DIGESTER, BLOW CONDENSATES	3.00E-4	5.00E-2		2.00E-4		5.00E-4								
P7	217	WEAK BLACK LIQUOR STORAGE TANK VENT	2.00E-3	3.00E-1		4.00E-4		2.00E-3								
P7	229	WASHER, FOAM TANK VENT	4.82E-3	4.72E-3		7.91E-3		4.15E-3								

MPU_CODE	EP_CODE	SOURCE	PCP_EF	ACROLEINEF	PROPAL_EF	TOLUENE_EF	CMETHANEEF	TCDD_EF	TCDF_EF	ACETOPHNEF	CARBDIS_EF	HEXANE_EF	TOTHAPEF	TOTVOCEF	TRS_EF
P7	176	KNOTTER, VENT		4.33E-4	1.38E-4	2.43E-1						3.00E-1	5.79E-1	2.61E+0	
P7	188	EVAPORATORS, CONDENSATES		2.00E-3	2.00E-3								1.71E-1	5.42E-1	5.25E-1
P7	190	EVAPORATORS, SURFACE COND. CONDENSATES			6.00E-4								3.91E-2	1.10E-1	2.64E-1
P7	200	DIGESTERS, RELIEF GASES		1.79E-3	1.41E-5	8.48E-3							2.25E-2	5.38E+0	2.57E-1
P7	202	DIGESTERS, BLOW GASES		5.00E-6	6.00E-5	5.00E-6							7.11E-2	2.49E-1	1.28E-1
P7	204	EVAPORATORS, MULTI EFFECT EVAP. VENT		3.00E-4									1.75E-3	9.06E-1	5.50E-1
P7	207	WASHER, HOOD VENT		2.20E-2	1.90E-4	4.00E-3							2.21E-1	2.57E+0	8.41E-1
P7	211	WASHER, DECKER VENT		1.79E-3	1.41E-5	8.48E-3							2.25E-2	5.15E+0	
P7	213	DIGESTER, BLOW CONDENSATES		3.00E-3	5.00E-5	4.00E-6							5.38E-2	3.58E-1	3.30E-1
P7	217	WEAK BLACK LIQUOR STORAGE TANK VENT		4.00E-3	3.00E-4								3.07E-1	9.55E-1	
P7	229	WASHER, FOAM TANK VENT		1.30E-4	7.40E-4								1.87E-2	2.35E-2	

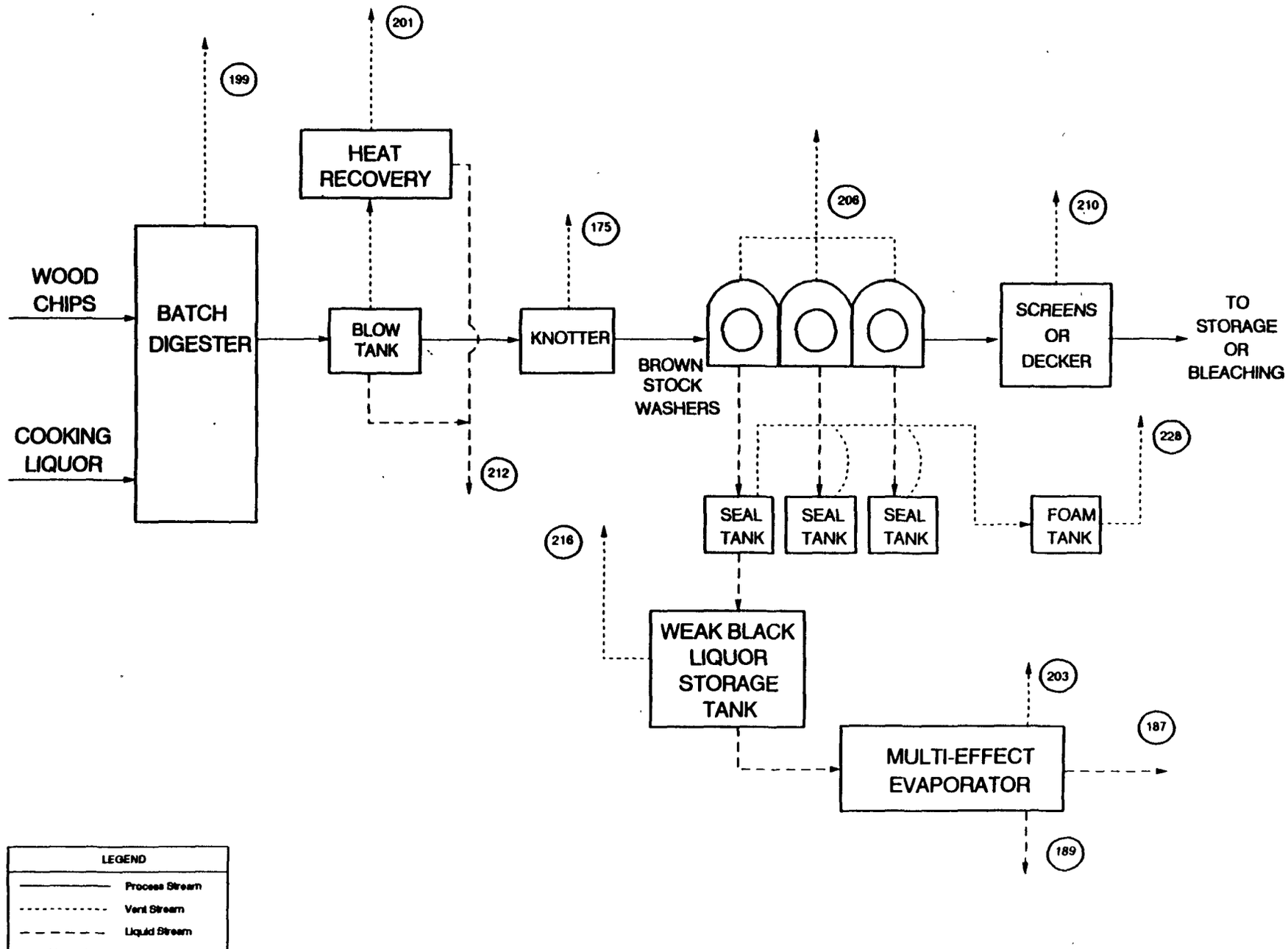

Figure P8. Pulping Identification - Sulfite, HWD

Model P8 - Stream Characteristics

MPU_CODE	EP_CODE	SOURCE	PROC_TYPE	PULP_TYP	WOOD_TYP	ENCLOSURE	SOURCE_TYP	VFLO_FAC	SFLO_FAC	VHAP_CON	SHAP_CON	HAL_STATUS
P8	175	KNOTTER, VENT	PULP	SULFITE	HARD	1	VENT	9.00E-1		5.67E+1		N
P8	187	EVAPORATORS, CONDENSATES	PULP	SULFITE	HARD		STREAM		4.90E+0		1.46E+3	N
P8	189	EVAPORATORS, SURFACE COND. CONDENSATES	PULP	SULFITE	HARD		STREAM		4.20E+0		3.53E+2	N
P8	199	DIGESTERS, RELIEF GASES	PULP	SULFITE	HARD		VENT	2.57E-3		4.65E+3		N
P8	201	DIGESTERS, BLOW GASES	PULP	SULFITE	HARD		VENT	1.30E+0		9.19E+0		N
P8	203	EVAPORATORS, MULTI EFFECT EVAP VENT	PULP	SULFITE	HARD		VENT	2.70E-3		4.13E+3		N
P8	206	WASHER, HOOD VENT	PULP	SULFITE	HARD	3	VENT	9.00E-1		1.30E+2		N
P8	210	WASHER, DECKER VENT	PULP	SULFITE	HARD	1	VENT	9.00E-1		1.33E+1		N
P8	212	DIGESTERS, BLOW CONDENSATES	PULP	SULFITE	HARD		STREAM		1.40E+0		9.06E+1	N
P8	216	WEAK BLACK LIQUOR STORAGE TANK VENT	PULP	SULFITE	HARD		VENT	2.74E-3		5.95E+4		N
P8	228	WASHER, FOAM TANK VENT	PULP	SULFITE	HARD		VENT	1.80E-1		5.52E+1		N

Model P8 - Emission Factor Summary

MPU_CODE	EP_CODE	SOURCE	ACET_EF	MEOH_EF	CTET_EF	MEK_EF	PCDB_EF	FORM_EF	HCL_EF	CL2_EF	MECL_EF	CHCL3_EF	L_BENZ_EF	PHENL_EF	MCHCL3EF	TCP245EF
P8	175	KNOTTER, VENT	5.06E-3	2.07E-2		8.04E-3		1.15E-3								
P8	187	EVAPORATORS, CONDENSATES	1.00E-2	3.00E+0		3.00E-2		5.00E-3								
P8	189	EVAPORATORS, SURFACE COND. CONDENSATES	2.50E-3	6.15E-1		6.90E-3		5.20E-3								
P8	199	DIGESTERS, RELIEF GASES	1.98E-4	1.18E-2		2.89E-4		6.91E-5								
P8	201	DIGESTERS, BLOW GASES	1.98E-4	1.18E-2		2.89E-4		6.91E-5								
P8	203	EVAPORATORS, MULTI EFFECT EVAP VENT	2.00E-4	2.00E-2		8.50E-4		4.00E-5								
P8	206	WASHER, HOOD VENT	3.00E-3	1.90E-1		3.00E-3		1.00E-3								
P8	210	WASHER, DECKER VENT	1.98E-4	1.18E-2		2.89E-4		6.91E-5								
P8	212	DIGESTERS, BLOW CONDENSATES	3.00E-4	5.00E-2		2.00E-4		5.00E-4								
P8	216	WEAK BLACK LIQUOR STORAGE TANK VENT	2.00E-3	3.00E-1		4.00E-4		2.00E-3								
P8	228	WASHER, FOAM TANK VENT	4.82E-3	4.72E-3		7.91E-3		4.15E-3								

MPU_CODE	EP_CODE	SOURCE	PCP_EF	ACROLEINEF	PROPAL_EF	TOLUENE_EF	CMETHANEEF	TCDD_EF	TCDF_EF	ACETOPHNEF	CARBDIS_EF	HEXANE_EF	TOTHAPEF	TOTVOCEF	TRS_EF
P8	175	KNOTTER, VENT		8.13E-4		6.00E-3				3.00E-3		5.10E-2	9.60E-2	8.14E-1	
P8	187	EVAPORATORS, CONDENSATES			5.00E-4								3.04E+0	3.22E+0	5.25E-1
P8	189	EVAPORATORS, SURFACE COND. CONDENSATES		1.10E-4	1.50E-4								6.29E-1	7.10E-1	2.64E-1
P8	199	DIGESTERS, RELIEF GASES		1.79E-3	1.41E-5	8.48E-3							2.25E-2	5.37E+0	2.52E-1
P8	201	DIGESTERS, BLOW GASES		1.79E-3	1.41E-5	8.48E-3							2.25E-2	5.22E+0	1.28E-1
P8	203	EVAPORATORS, MULTI EFFECT EVAP VENT											2.10E-2	3.22E+0	5.50E-1
P8	206	WASHER, HOOD VENT		2.20E-2	1.90E-4	4.00E-3							2.21E-1	2.57E+0	8.41E-1
P8	210	WASHER, DECKER VENT		1.79E-3	1.41E-5	8.48E-3							2.25E-2	5.15E+0	
P8	212	DIGESTERS, BLOW CONDENSATES		3.00E-3	5.00E-5	4.00E-6							5.38E-2	3.58E-1	3.30E-1
P8	216	WEAK BLACK LIQUOR STORAGE TANK VENT		4.00E-3	3.00E-4								3.07E-1	9.55E-1	
P8	228	WASHER, FOAM TANK VENT		1.30E-4	7.40E-4								1.87E-2	2.35E-2	

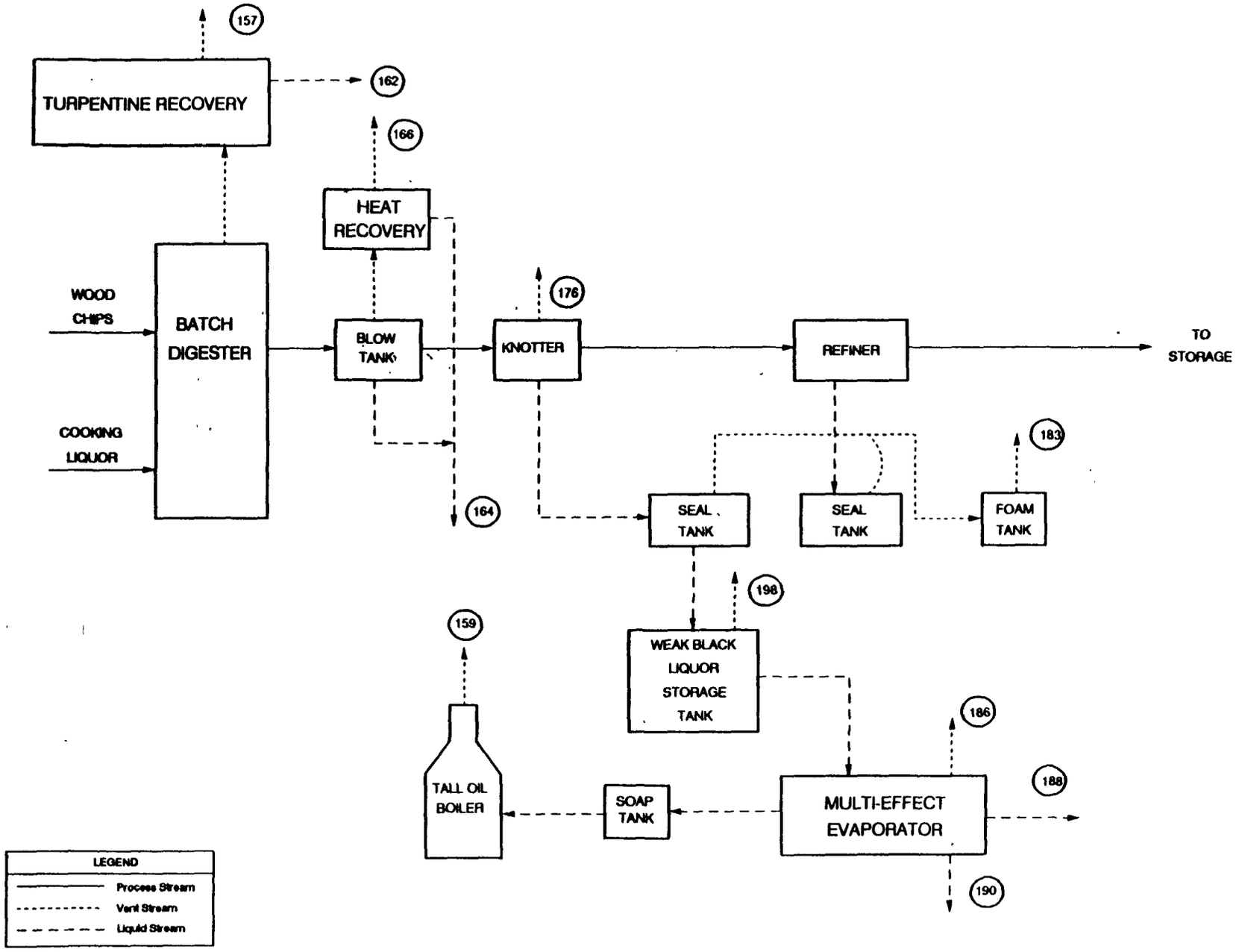

Figure P9. Pulping Identification - Semi-chemical (Kraft Process), SWD

Model P9 - Stream Characteristics

MPU_CODE	EP_CODE	SOURCE	PROC_TYPE	PULP_TYP	WOOD_TYP	ENCLOSURE	SOURCE_TYP	VFLO_FAC	SFLO_FAC	VHAP_CON	SHAP_CON	HAL_STATUS
P9	157	NCG SYSTEM, TURPENTINE CONDENSER	PULP	SEMI-CHEMICAL	SOFT		VENT	2.57E-3	1.10E-1	8.36E+2		N
P9	159	TALL OIL RECOVERY, BATCH VENT	PULP	SEMI-CHEMICAL	SOFT		VENT	7.64E-3				N
P9	162	NCG SYSTEM, TURPENTINE CONDENSATES	PULP	SEMI-CHEMICAL	SOFT		STREAM		1.10E-1		1.08E+4	N
P9	164	DIGESTERS, BLOW CONDENSATES	PULP	SEMI-CHEMICAL	SOFT		STREAM		1.40E+0		1.76E+2	N
P9	166	DIGESTERS, BLOW GASES	PULP	SEMI-CHEMICAL	SOFT		VENT	1.30E+0		1.61E-1		N
P9	176	KNOTTERS, HOOD VENT	PULP	SEMI-CHEMICAL	SOFT	1	VENT	9.00E-1		3.42E+2		N
P9	183	WASHERS, FOAM TANK VENT	PULP	SEMI-CHEMICAL	SOFT		VENT	1.80E-1		5.60E+2		N
P9	186	EVAPORATORS, VENT	PULP	SEMI-CHEMICAL	SOFT		VENT	2.70E-3		3.45E+2		N
P9	188	EVAPORATORS, CONDENSATES	PULP	SEMI-CHEMICAL	SOFT		STREAM		4.90E+0		8.21E+1	N
P9	190	EVAPORATORS, SURFACE COND. CONDENSATES	PULP	SEMI-CHEMICAL	SOFT		STREAM		4.20E+0		2.19E+1	N
P9	198	WEAK BLACK LIQUOR STORAGE TANK VENT	PULP	SEMI-CHEMICAL	SOFT		VENT	2.74E-3		8.28E+3		N

Model P9 - Emission Factor Summary

MPU_CODE	EP_CODE	SOURCE	ACET_EF	MEOH_EF	CTET_EF	MEK_EF	PCDB_EF	FORM_EF	HCL_EF	CL2_EF	MECL_EF	CHCL3_EF	L_BENZ_EF	PHENL_EF	MCHCL3EF	TCP245EF
P9	157	NCG SYSTEM, TURPENTINE CONDENSER	1.20E-4	3.20E-3		2.00E-4		8.00E-6								
P9	159	TALL OIL RECOVERY, BATCH VENT														
P9	162	NCG SYSTEM, TURPENTINE CONDENSATES	4.00E-3	5.00E-1		2.00E-3		6.00E-5								
P9	164	DIGESTERS, BLOW CONDENSATES	1.60E-3	1.00E-1		2.20E-3		1.00E-3								
P9	166	DIGESTERS, BLOW GASES	4.00E-5	2.40E-4		1.00E-4		1.70E-5								
P9	176	KNOTTERS, HOOD VENT	7.26E-3	3.11E-2		3.21E-3		6.91E-4								
P9	183	WASHERS, FOAM TANK VENT	1.10E-2	1.76E-1		7.00E-3		2.00E-3								
P9	186	EVAPORATORS, VENT	7.00E-6	1.40E-3		6.00E-6		3.00E-5								
P9	188	EVAPORATORS, CONDENSATES	3.90E-3	1.50E-1		7.70E-3		5.00E-3								
P9	190	EVAPORATORS, SURFACE COND. CONDENSATES	9.75E-4	3.08E-2		1.77E-3		5.20E-3								
P9	198	WEAK BLACK LIQUOR STORAGE TANK VENT	1.00E-2	4.00E-2		1.00E-4		2.00E-3								

MPU_CODE	EP_CODE	SOURCE	PCP_EF	ACROLEINEF	PROPAL_EF	TOLUENE_EF	CMETHANEEF	TCDD_EF	TCDF_EF	ACETOPHNEF	CARBDIS_EF	HEXANE_EF	TOTHAPEF	TOTVOCEF	TRS_EF
P9	157	NCG SYSTEM, TURPENTINE CONDENSER		5.00E-7									4.04E-3	4.11E+0	2.68E+0
P9	159	TALL OIL RECOVERY, BATCH VENT												5.83E-3	1.02E-1
P9	162	NCG SYSTEM, TURPENTINE CONDENSATES		2.00E-6	2.20E-4								5.05E-1	9.74E-1	7.11E-2
P9	164	DIGESTERS, BLOW CONDENSATES		3.00E-5	2.00E-4								1.04E-1	3.42E-1	2.32E-1
P9	166	DIGESTERS, BLOW GASES		1.00E-6									3.93E-4	3.97E+0	4.02E+0
P9	176	KNOTTERS, HOOD VENT		4.33E-4	1.38E-4	2.43E-1						3.00E-1	5.79E-1	2.61E+0	
P9	183	WASHERS, FOAM TANK VENT		7.00E-5	4.00E-4	4.00E-4							1.89E-1	1.62E+0	2.20E-1
P9	186	EVAPORATORS, VENT		3.00E-4									1.75E-3	3.07E+0	3.54E+0
P9	188	EVAPORATORS, CONDENSATES		2.00E-3	2.00E-3								1.71E-1	5.42E-1	5.25E-1
P9	190	EVAPORATORS, SURFACE COND. CONDENSATES			6.00E-4								3.91E-2	1.10E-1	2.64E-1
P9	198	WEAK BLACK LIQUOR STORAGE TANK VENT		2.00E-5	4.00E-4								4.27E-2	6.87E-2	

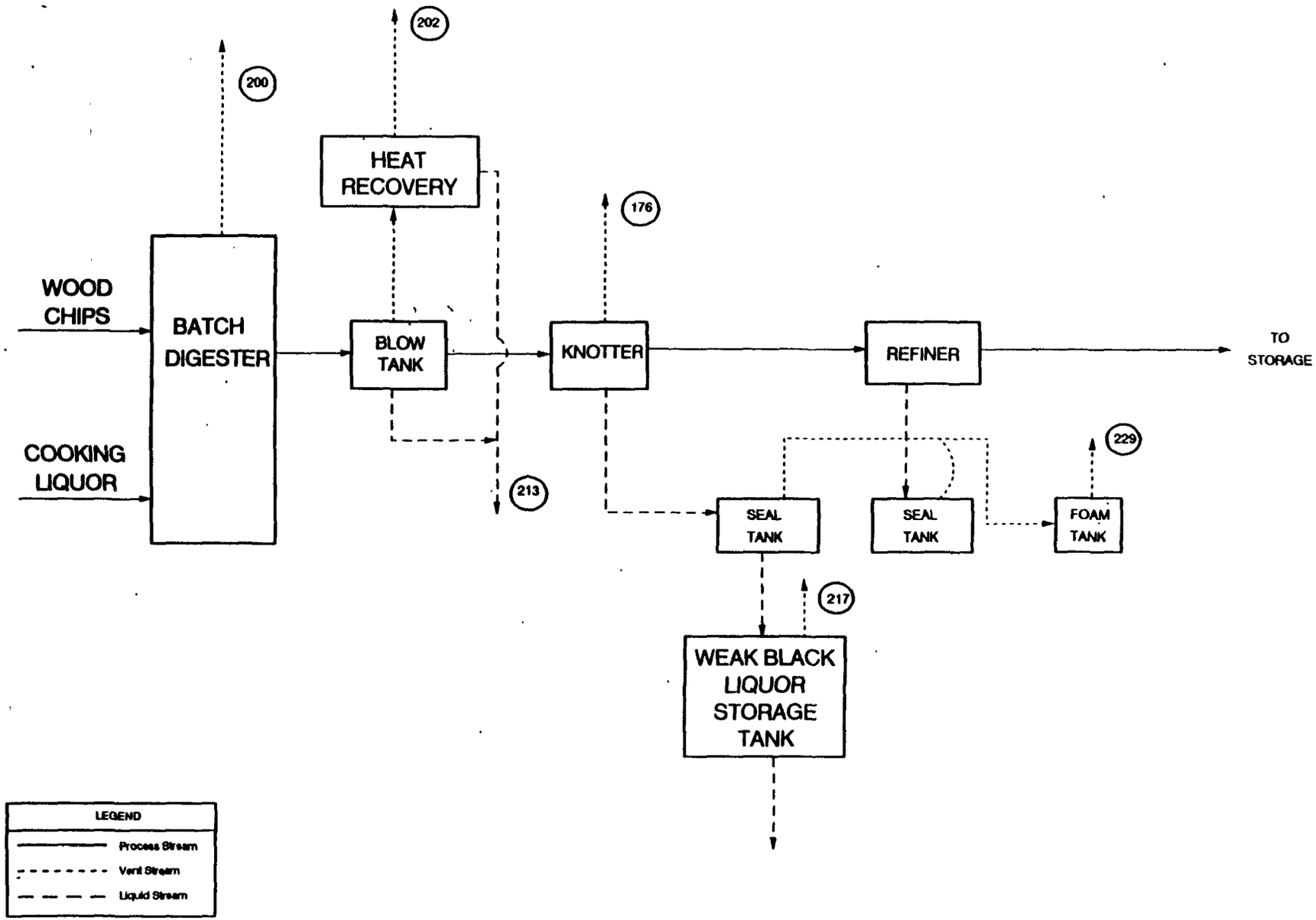

Figure P10. Pulping Identification - Semi-chemical (Sulfite Process), SWD

Model P10 - Stream Characteristics

MPU_CODE	EP_CODE	SOURCE	PROC_TYPE	PULP_TYP	WOOD_TYP	ENCLOSURE	SOURCE_TYP	VFLO_FAC	SFLO_FAC	VHAP_CON	SHAP_CON	HAL_STATUS
P10	176	WASHERS, KNOTTER VENT	PULP	SEMI-CHEMICAL	SOFT	1	VENT	9.00E-1		3.42E+2		N
P10	200	DIGESTERS, RELIEF GASES	PULP	SEMI-CHEMICAL	SOFT		VENT	2.57E-3		4.65E+3		N
P10	202	DIGESTERS, BLOW GASES	PULP	SEMI-CHEMICAL	SOFT		VENT	1.30E+0		2.91E+1		N
P10	213	DIGESTERS, BLOW CONDENSATES	PULP	SEMI-CHEMICAL	SOFT		STREAM		1.40E+0		9.06E+1	N
P10	217	WEAK BLACK LIQUOR STORAGE TANK VENT	PULP	SEMI-CHEMICAL	SOFT		VENT	2.74E-3		5.95E+4		N
P10	229	WASHERS, FOAM TANK VENT	PULP	SEMI-CHEMICAL	SOFT		VENT	1.80E-1		5.52E+1		N

Model P10 - Emission Factor Summary

MPU_CODE	EP_CODE	SOURCE	ACET_EF	MEOH_EF	CTET_EF	MEK_EF	PCDB_EF	FORM_EF	HCL_EF	CL2_EF	MECL_EF	CHCL3_EF	L_BENZ_EF	PHENL_EF	MCHCL3EF	TCP245EF
P10	176	WASHERS, KNOTTER VENT	7.26E-3	3.11E-2		3.21E-3		6.91E-4								
P10	200	DIGESTERS, RELIEF GASES	1.98E-4	1.18E-2		2.89E-4		6.91E-5								
P10	202	DIGESTERS, BLOW GASES	5.00E-4	7.00E-2		4.00E-5		4.00E-6								
P10	213	DIGESTERS, BLOW CONDENSATES	3.00E-4	5.00E-2		2.00E-4		5.00E-4								
P10	217	WEAK BLACK LIQUOR STORAGE TANK VENT	2.00E-3	3.00E-1		4.00E-4		2.00E-3								
P10	229	WASHERS, FOAM TANK VENT	4.82E-3	4.72E-3		7.91E-3		4.15E-3								

MPU_CODE	EP_CODE	SOURCE	PCP_EF	ACROLEINEF	PROPAL_EF	TOLUENE_EF	CMETHANEEF	TCDD_EF	TCDF_EF	ACETOPHNEF	CARBDIS_EF	HEXANE_EF	TOTHAPEF	TOTVOCEF	TRS_EF
P10	176	WASHERS, KNOTTER VENT		4.33E-4	1.38E-4	2.43E-1						3.00E-1	5.79E-1	2.61E+0	
P10	200	DIGESTERS, RELIEF GASES		1.79E-3	1.41E-5	8.48E-3							2.25E-2	5.38E+0	2.57E-1
P10	202	DIGESTERS, BLOW GASES		5.00E-6	6.00E-5	5.00E-6							7.11E-2	2.49E-1	1.28E-1
P10	213	DIGESTERS, BLOW CONDENSATES		3.00E-3	5.00E-5	4.00E-6							5.38E-2	3.58E-1	3.30E-1
P10	217	WEAK BLACK LIQUOR STORAGE TANK VENT		4.00E-3	3.00E-4								3.07E-1	9.55E-1	
P10	229	WASHERS, FOAM TANK VENT		1.30E-4	7.40E-4								1.87E-2	2.35E-2	

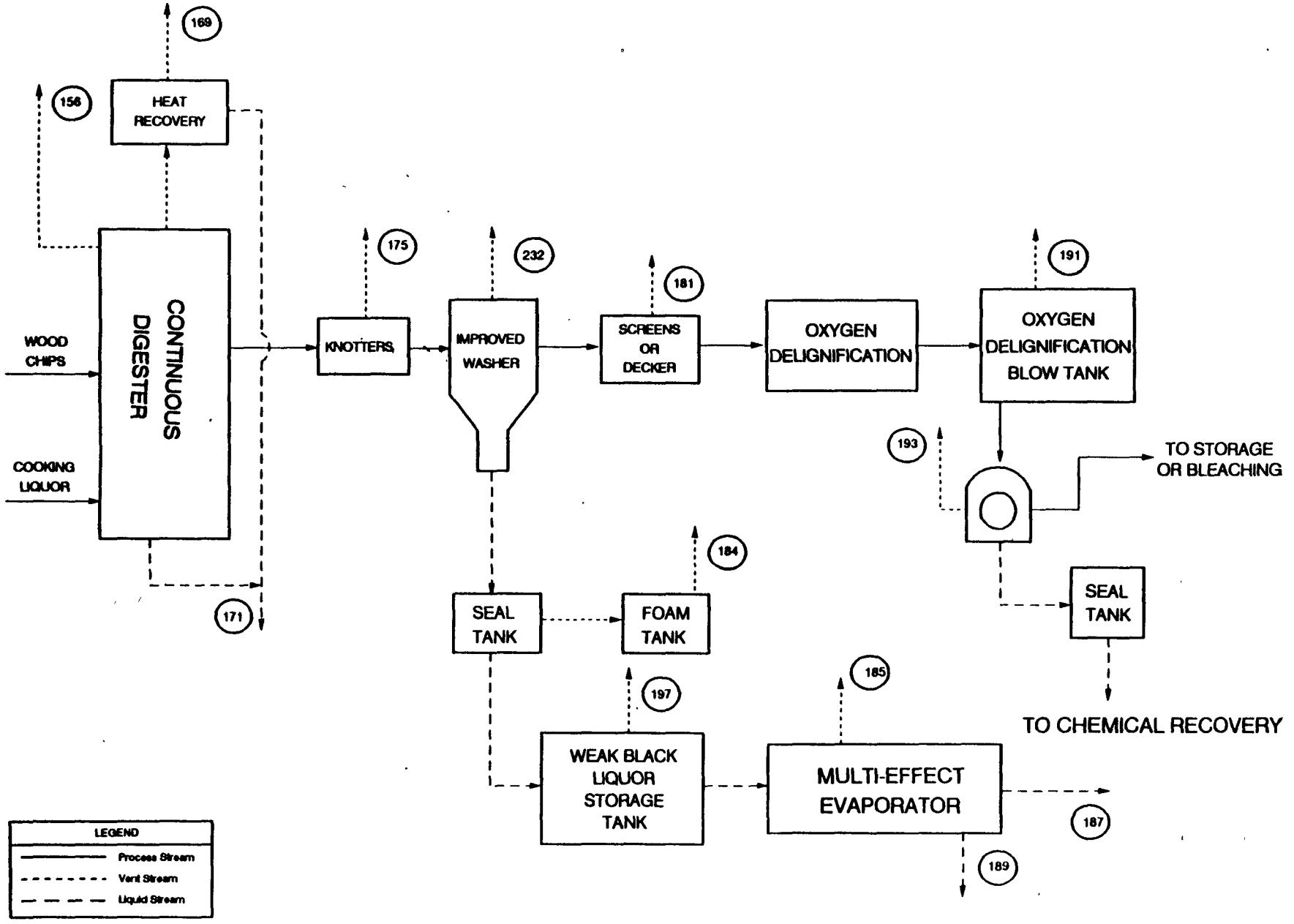

Figure P11. Pulping Identification - Kraft, HWD, Continuous, Improved Washing, Oxygen Delignification

Model P11 Stream Characteristics

MPU_CODE	EP_CODE	SOURCE	PROC_TYPE	PULP_TYP	WOOD_TYP	ENCLOSURE	SOURCE_TYP	VFLO_FAC	SFLO_FAC	VHAP_CON	SHAP_CON	HAL_STATUS
P11	156	DIGESTERS, RELIEF GASES	PULP	KRAFT	HARD		VENT	2.60E-3		8.59E+2		N
P11	169	DIGESTERS, BLOW GASES	PULP	KRAFT	HARD		VENT	2.60E-2		2.06E+3		N
P11	171	DIGESTERS, BLOW CONDENSATES	PULP	KRAFT	HARD		STREAM		6.90E-1		2.12E+3	N
P11	175	KNOTTERS, HOOD VENT	PULP	KRAFT	HARD	1	VENT	9.00E-1		5.67E+1		N
P11	181	WASHERS, SCREENS OR DECKER VENT	PULP	KRAFT	HARD	1	VENT	9.00E-1		2.03E+0		N
P11	184	WASHERS, FOAM TANK VENT	PULP	KRAFT	HARD		VENT	1.80E-1		5.96E+2		N
P11	185	EVAPORATORS, VENT	PULP	KRAFT	HARD		VENT	2.70E-3		4.13E+3		N
P11	187	EVAPORATORS, CONDENSATES	PULP	KRAFT	HARD		STREAM		4.90E+0		1.46E+3	N
P11	189	EVAPORATORS, SURFACE COND. CONDENSATES	PULP	KRAFT	HARD		STREAM		4.20E+0		3.53E+2	N
P11	191	OXYGEN DELIGNIFICATION BLOW TANK	PULP	KRAFT	HARD		VENT	2.60E-2		3.82E+2		N
P11	193	OXYGEN DELIGNIFICATION WASHER VENT	PULP	KRAFT	HARD		VENT	1.80E-1		7.17E+2		N
P11	197	WEAK BLACK LIQUOR STORAGE TANK VENT	PULP	KRAFT	HARD		VENT	2.74E-3		2.99E+4		N
P11	232	WASHERS, HOOD VENT	PULP	KRAFT	HARD		VENT	2.74E-2		5.47E+2		N

Model P11 - Emission Factor Summary

MPU_CODE	EP_CODE	SOURCE	ACET_EF	MEOH_EF	CTET_EF	MEK_EF	PCDB_EF	FORM_EF	HCL_EF	CL2_EF	MECL_EF	CHCL3_EF	L_BENZ_EF	PHENL_EF	MCHCL3EF	TCP245EF
P11	156	DIGESTERS, RELIEF GASES	6.40E-5	3.20E-3		8.00E-4		3.00E-5								
P11	169	DIGESTERS, BLOW GASES	1.00E-3	9.10E-2		7.00E-3		5.00E-4								
P11	171	DIGESTERS, BLOW CONDENSATES	2.90E-3	5.90E-1		2.20E-2		1.70E-3								
P11	175	KNOTTERS, HOOD VENT	5.06E-3	2.07E-2		8.04E-3		1.15E-3								
P11	181	WASHERS, SCREENS OR DECKER VENT	5.12E-4	2.23E-3		5.50E-4		1.11E-4								
P11	184	WASHERS, FOAM TANK VENT	3.80E-2	1.86E-1		7.27E-3		3.26E-3								
P11	185	EVAPORATORS, VENT	2.00E-4	2.00E-2		8.50E-4		4.00E-5								
P11	187	EVAPORATORS, CONDENSATES	1.00E-2	3.00E+0		3.00E-2		5.00E-3								
P11	189	EVAPORATORS, SURFACE COND. CONDENSATES	2.50E-3	6.15E-1		6.90E-3		5.20E-3								
P11	191	OXYGEN DELIGNIFICATION BLOW TANK		4.72E-3		7.91E-3		4.13E-3								
P11	193	OXYGEN DELIGNIFICATION WASHER VENT	7.30E-2	7.60E-2		8.20E-2		5.97E-2								
P11	197	WEAK BLACK LIQUOR STORAGE TANK VENT	5.00E-4	1.00E-1		1.00E-3		2.00E-3								
P11	232	WASHERS, HOOD VENT	1.50E-3	2.80E-2		2.00E-4		1.00E-5								

MPU_CODE	EP_CODE	SOURCE	PCP_EF	ACROLEINEF	PROPAL_EF	TOLUENE_EF	CMETHANEEF	TCDD_EF	TCDF_EF	ACETOPHNEF	CARBDIS_EF	HEXANE_EF	TOTHAPEF	TOTVOCEF	TRS_EF
P11	156	DIGESTERS, RELIEF GASES											4.20E-3	2.61E+0	2.68E+0
P11	169	DIGESTERS, BLOW GASES			1.84E-4								1.01E-1	2.42E+0	2.37E+0
P11	171	DIGESTERS, BLOW CONDENSATES											6.21E-1	1.20E+0	3.30E-1
P11	175	KNOTTERS, HOOD VENT		8.13E-4		6.00E-3				3.00E-3		5.10E-2	9.60E-2	8.14E-1	
P11	181	WASHERS, SCREENS OR DECKER VENT		6.64E-5		2.53E-5				1.24E-5		5.43E-6	3.44E-3	9.06E-3	
P11	184	WASHERS, FOAM TANK VENT		1.42E-3	5.59E-4	2.31E-3						3.24E-5	2.02E-1	5.81E-1	2.20E-1
P11	185	EVAPORATORS, VENT											2.10E-2	5.39E+0	3.54E+0
P11	187	EVAPORATORS, CONDENSATES			5.00E-4								3.04E+0	3.22E+0	5.25E-1
P11	189	EVAPORATORS, SURFACE COND. CONDENSATES		1.10E-4	1.50E-4								6.29E-1	7.10E-1	2.64E-1
P11	191	OXYGEN DELIGNIFICATION BLOW TANK		1.63E-4	7.40E-4								1.87E-2	1.42E-1	
P11	193	OXYGEN DELIGNIFICATION WASHER VENT		2.00E-3	1.00E-2								2.43E-1	4.10E-1	
P11	197	WEAK BLACK LIQUOR STORAGE TANK VENT		1.00E-3	1.00E-5								1.54E-1	1.55E-1	
P11	232	WASHERS, HOOD VENT		4.00E-8	5.00E-7								2.82E-2	2.38E+0	2.11E+0

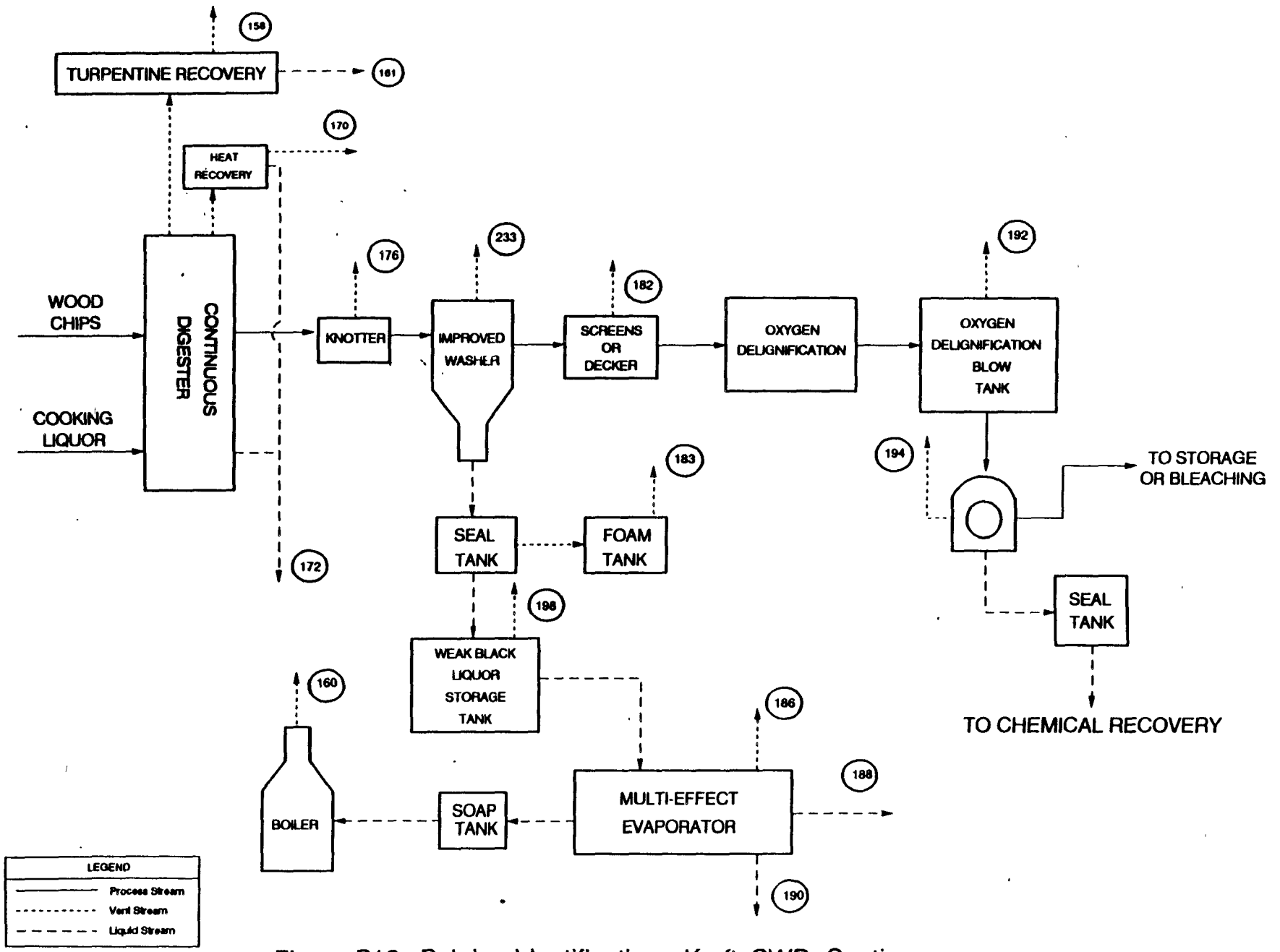

Figure P12. Pulping Identification - Kraft, SWD, Continuous, Improved Washing, Oxygen Delignification

Model P12 Stream Characteristics

MPU_CODE	EP_CODE	SOURCE	PROC_TYPE	PULP_TYP	WOOD_TYP	ENCLOSURE	SOURCE_TYP	VFLO_FAC	SFLO_FAC	VHAP_CON	SHAP_CON	HAL_STATUS
P12	158	NCG SYSTEM, CONT. TURPENTINE CONDENSER	PULP	KRAFT	SOFT		VENT	2.60E-3	1.10E-1	8.26E+2		N
P12	160	TALL OIL RECOVERY, CONTINUOUS VENT	PULP	KRAFT	SOFT		VENT	6.90E-5				N
P12	161	NCG SYSTEM, TURPENTINE CONDENSATES	PULP	KRAFT	SOFT		STREAM		1.10E-1		1.08E+4	N
P12	170	DIGESTERS, BLOW GASES	PULP	KRAFT	SOFT		VENT	2.60E-2		7.16E+1		N
P12	172	DIGESTERS, CONDENSATES	PULP	KRAFT	SOFT		STREAM		6.90E 1		1.27E+3	N
P12	176	KNOTTERS, HOOD VENT	PULP	KRAFT	SOFT	1	VENT	9.00E-1		3.42E+2		N
P12	182	WASHERS, DECKERS/SCREENS	PULP	KRAFT	SOFT	1	VENT	9.00E-1		2.81E+0		N
P12	183	WASHERS, FOAM TANK VENT	PULP	KRAFT	SOFT		VENT	1.80E-1		5.60E+2		N
P12	186	EVAPORATORS, VENT	PULP	KRAFT	SOFT		VENT	2.70E-3		3.45E+2		N
P12	188	EVAPORATORS, CONDENSATES	PULP	KRAFT	SOFT		STREAM		4.90E+0		8.21E+1	N
P12	190	EVAPORATORS, SURFACE COND. CONDENSATES	PULP	KRAFT	SOFT		STREAM		4.20E+0		2.19E+1	N
P12	192	OXYGEN DELIGNIFICATION BLOW TANK	PULP	KRAFT	SOFT		VENT	2.60E-2		1.03E+3		N
P12	194	OXYGEN DELIGNIFICATION WASHER VENT	PULP	KRAFT	SOFT		VENT	1.80E-1		7.17E+2		N
P12	198	WEAK BLACK LIQUOR STORAGE TANK VENT	PULP	KRAFT	SOFT		VENT	2.74E-3		8.28E+3		N
P12	233	WASHERS, HOOD VENT	PULP	KRAFT	SOFT		VENT	2.74E-2		5.47E+2		N

Model P12 - Emission Factor Summary

MPU_CODE	EP_CODE	SOURCE	ACET_EF	MEOH_EF	CTET_EF	MEK_EF	PCDB_EF	FORM_EF	HCL_EF	CL2_EF	MECL_EF	CHCL3_EF	L_BENZ_EF	PHENL_EF	MCHCL3EF	TCP245EF
P12	158	NCG SYSTEM, CONT. TURPENTINE CONDENSER	1.20E-4	3.20E-3		2.00E-4		8.00E-6								
P12	160	TALL OIL RECOVERY, CONTINUOUS VENT														
P12	161	NCG SYSTEM, TURPENTINE CONDENSATES	4.00E-3	5.00E-1		2.00E-3		6.00E-5								
P12	170	DIGESTERS, BLOW GASES	1.60E-4	3.00E-3		1.00E-4		1.70E-7								
P12	172	DIGESTERS, CONDENSATES	4.30E-3	3.46E-1		1.40E-2		4.40E-4								
P12	176	KNOTTERS, HOOD VENT	7.26E-3	3.11E-2		3.21E-3		6.91E-4								
P12	182	WASHERS, DECKERS/SCREENS	7.35E-4	3.34E-3		2.20E-4		6.67E-5								
P12	183	WASHERS, FOAM TANK VENT	1.10E-2	1.76E-1		7.00E-3		2.00E-3								
P12	186	EVAPORATORS, VENT	7.00E-6	1.40E-3		6.00E-6		3.00E-5								
P12	188	EVAPORATORS, CONDENSATES	3.90E-3	1.50E-1		7.70E-3		5.00E-3								
P12	190	EVAPORATORS, SURFACE COND. CONDENSATES	9.75E-4	3.08E-2		1.77E-3		5.20E-3								
P12	192	OXYGEN DELIGNIFICATION BLOW TANK	1.00E-3	5.00E-2		2.00E-4										
P12	194	OXYGEN DELIGNIFICATION WASHER VENT	7.30E-2	7.60E-2		8.20E-2		5.97E-2								
P12	198	WEAK BLACK LIQUOR STORAGE TANK VENT	1.00E-2	4.00E-2		1.00E-4		2.00E-3								
P12	233	WASHERS, HOOD VENT	1.50E-3	2.80E-2		2.00E-4		1.00E-5								

MPU_CODE	EP_CODE	SOURCE	PCP_EF	ACROLEINEF	PROPAL_EF	TOLUENE_EF	CMETHANEEF	TCDD_EF	TCDF_EF	ACETOPHNEF	CARBDIS_EF	HEXANE_EF	TOTHAPEF	TOTVOCEF	TRS_EF
P12	158	NCG SYSTEM, CONT. TURPENTINE CONDENSER		5.00E-7									4.04E-3	4.11E+0	2.68E+0
P12	160	TALL OIL RECOVERY, CONTINUOUS VENT												5.83E-3	1.02E-1
P12	161	NCG SYSTEM, TURPENTINE CONDENSATES		2.00E-6	2.20E-4								5.05E-1	9.74E-1	7.11E-2
P12	170	DIGESTERS, BLOW GASES		6.00E-7		1.00E-7							3.50E-3	4.91E+0	2.37E+0
P12	172	DIGESTERS, CONDENSATES		1.30E-5	2.20E-3								3.72E-1	6.78E-1	3.30E-1
P12	176	KNOTTERS, HOOD VENT		4.33E-4	1.38E-4	2.43E-1						3.00E-1	5.79E-1	2.61E+0	
P12	182	WASHERS, DECKERS/SCREENS		3.54E-5	1.24E-5	1.02E-3						3.20E-5	4.75E-3	2.34E-2	
P12	183	WASHERS, FOAM TANK VENT		7.00E-5	4.00E-4	4.00E-4							1.89E-1	1.62E+0	2.20E-1
P12	186	EVAPORATORS, VENT		3.00E-4									1.75E-3	3.07E+0	3.54E+0
P12	188	EVAPORATORS, CONDENSATES		2.00E-3	2.00E-3								1.71E-1	5.42E-1	5.25E-1
P12	190	EVAPORATORS, SURFACE COND. CONDENSATES			6.00E-4								3.91E-2	1.10E-1	2.64E-1
P12	192	OXYGEN DELIGNIFICATION BLOW TANK											5.02E-2	1.42E-1	
P12	194	OXYGEN DELIGNIFICATION WASHER VENT		2.00E-3	1.00E-2								2.43E-1	4.10E-1	
P12	198	WEAK BLACK LIQUOR STORAGE TANK VENT		2.00E-5	4.00E-4								4.27E-2	6.87E-2	
P12	233	WASHERS, HOOD VENT		4.00E-8	5.00E-7								2.82E-2	2.38E+0	2.11E+0

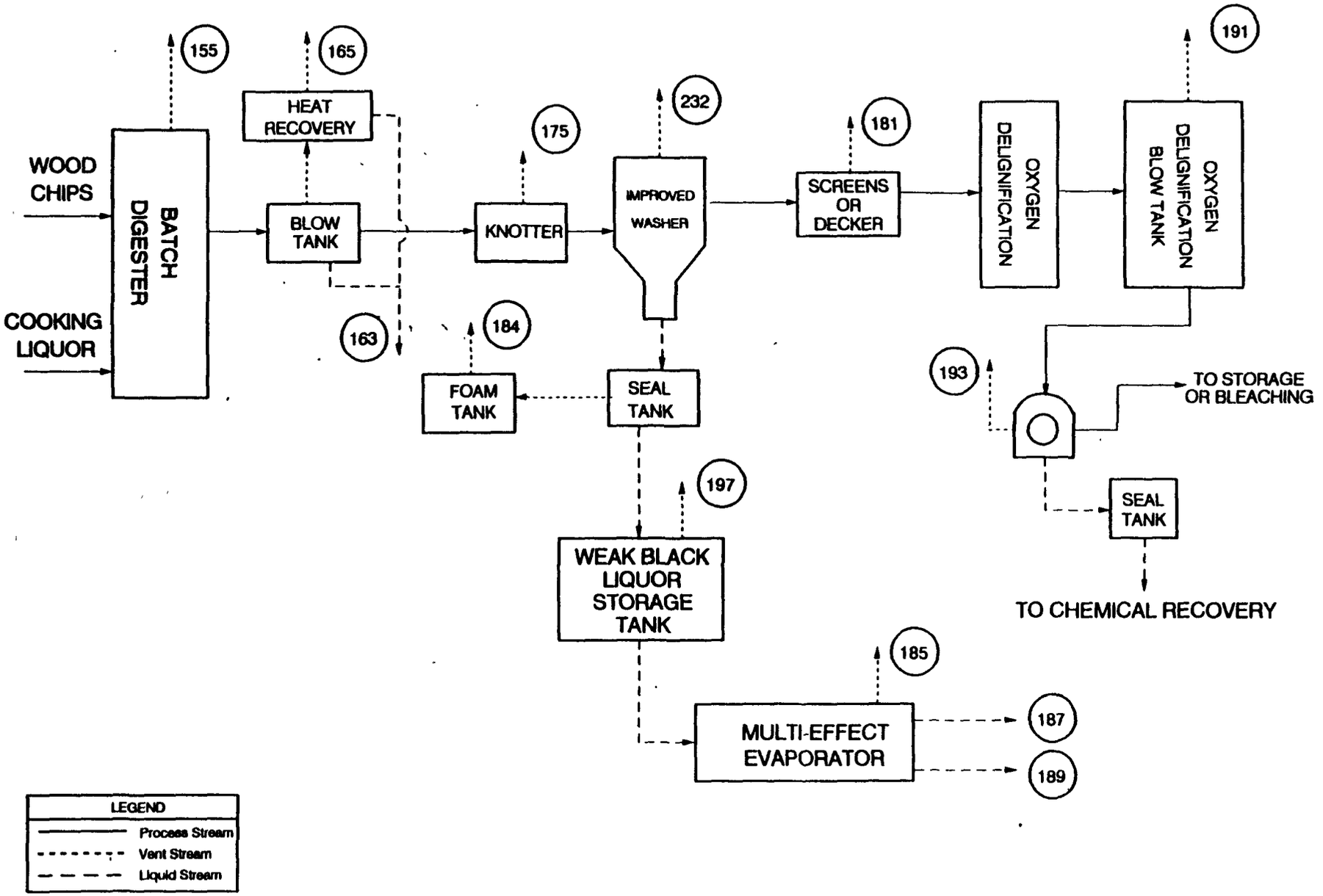

Figure P13. Pulping Identification - Kraft, HWD, Batch, Improved Washing, Oxygen Delignification

Model P13 Stream Characteristics

MPU_CODE	EP_CODE	SOURCE	PROC_TYPE	PULP_TYP	WOOD_TYP	ENCLOSURE	SOURCE_TYP	VFLO_FAC	SFLO_FAC	VHAP_CON	SHAP_CON	HAL_STATUS
P13	155	DIGESTERS, RELIEF GASES	PULP	KRAFT	HARD		VENT	2.57E-3		8.69E+2		N
P13	163	DIGESTERS, BLOW CONDENSATES	PULP	KRAFT	HARD		STREAM		1.40E+0		9.96E+2	N
P13	165	DIGESTERS, BLOW GASES	PULP	KRAFT	HARD		VENT	1.30E+0		4.18E+1		N
P13	175	KNOTTERS, HOOD VENT	PULP	KRAFT	HARD	1	VENT	9.00E-1		5.67E+1		N
P13	181	WASHERS, DECKERS/SCREENS	PULP	KRAFT	HARD	1	VENT	9.00E-1		2.03E+0		N
P13	184	WASHERS, FOAM TANK VENT	PULP	KRAFT	HARD		VENT	1.80E-1		5.96E+2		N
P13	185	EVAPORATORS, VENT	PULP	KRAFT	HARD		VENT	2.70E-3		4.13E+3		N
P13	187	EVAPORATORS, CONDENSATES	PULP	KRAFT	HARD		STREAM		4.90E+0		1.46E+3	N
P13	189	EVAPORATORS, SURFACE COND. CONDENSATES	PULP	KRAFT	HARD		STREAM		4.20E+0		3.53E+2	N
P13	191	OXYGEN DELIGNIFICATION BLOW TANK	PULP	KRAFT	HARD		VENT	2.60E-2		3.82E+2		N
P13	193	OXYGEN DELIGNIFICATION WASHER VENT	PULP	KRAFT	HARD		VENT	1.80E-1		7.17E+2		N
P13	197	WEAK BLACK LIQUOR STORAGE TANK VENT	PULP	KRAFT	HARD		VENT	2.74E-3		2.99E+4		N
P13	232	WASHERS, HOOD VENT	PULP	KRAFT	HARD		VENT	2.74E-2		5.47E+2		N

Model P13 - Emission Factor Summary

MPU_CODE	EP_CODE	SOURCE	ACET_EF	MEOH_EF	CTET_EF	MEK_EF	PCDB_EF	FORM_EF	HCL_EF	CL2_EF	MECL_EF	CHCL3_EF	L_BENZ_EF	PHENL_EF	MCHCL3EF	TCP245EF
P13	155	DIGESTERS, RELIEF GASES	6.40E-5	3.20E-3		8.00E-4		3.00E-5								
P13	163	DIGESTERS, BLOW CONDENSATES	1.20E-3	5.90E-1		1.20E-3										
P13	165	DIGESTERS, BLOW GASES	1.52E-3	6.21E-3		2.41E-3		3.46E-4								
P13	175	KNOTTERS, HOOD VENT	5.06E-3	2.07E-2		8.04E-3		1.15E-3								
P13	181	WASHERS, DECKERS/SCREENS	5.12E-4	2.23E-3		5.50E-4		1.11E-4								
P13	184	WASHERS, FOAM TANK VENT	3.80E-2	1.86E-1		7.27E-3		3.26E-3								
P13	185	EVAPORATORS, VENT	2.00E-4	2.00E-2		8.50E-4		4.00E-5								
P13	187	EVAPORATORS, CONDENSATES	1.00E-2	3.00E+0		3.00E-2		5.00E-3								
P13	189	EVAPORATORS, SURFACE COND. CONDENSATES	2.50E-3	6.15E-1		6.90E-3		5.20E-3								
P13	191	OXYGEN DELIGNIFICATION BLOW TANK		4.72E-3		7.91E-3		4.13E-3								
P13	193	OXYGEN DELIGNIFICATION WASHER VENT	7.30E-2	7.60E-2		8.20E-2		5.97E-2								
P13	197	WEAK BLACK LIQUOR STORAGE TANK VENT	5.00E-4	1.00E-1		1.00E-3		2.00E-3								
P13	232	WASHERS, HOOD VENT	1.50E-3	2.80E-2		2.00E-4		1.00E-5								

MPU_CODE	EP_CODE	SOURCE	PCP_EF	ACROLEINEF	PROPAL_EF	TOLUENE_EF	CMETHANEEF	TCDD_EF	TCDF_EF	ACETOPHNEF	CARBDIS_EF	HEXANE_EF	TOTHAPEF	TOTVOCEF	TRS_EF
P13	155	DIGESTERS, RELIEF GASES											4.20E-3	2.59E+0	2.62E+0
P13	163	DIGESTERS, BLOW CONDENSATES											5.91E-1	8.59E-1	3.30E-1
P13	165	DIGESTERS, BLOW GASES		2.44E-4		4.24E-3				2.22E-3		8.50E-2	1.02E-1	4.37E+0	4.02E+0
P13	175	KNOTTERS, HOOD VENT		8.13E-4		6.00E-3				3.00E-3		5.10E-2	9.60E-2	8.14E-1	
P13	181	WASHERS, DECKERS/SCREENS		6.64E-5		2.53E-5				1.24E-5		5.43E-6	3.44E-3	9.06E-3	
P13	184	WASHERS, FOAM TANK VENT		1.42E-3	5.59E-4	2.31E-3						3.24E-5	2.02E-1	5.81E-1	2.20E-1
P13	185	EVAPORATORS, VENT											2.10E-2	5.39E+0	3.54E+0
P13	187	EVAPORATORS, CONDENSATES			5.00E-4								3.04E+0	3.22E+0	5.25E-1
P13	189	EVAPORATORS, SURFACE COND. CONDENSATES		1.10E-4	1.50E-4								6.29E-1	7.10E-1	2.64E-1
P13	191	OXYGEN DELIGNIFICATION BLOW TANK		1.63E-4	7.40E-4								1.87E-2	1.42E-1	
P13	193	OXYGEN DELIGNIFICATION WASHER VENT		2.00E-3	1.00E-2								2.43E-1	4.10E-1	
P13	197	WEAK BLACK LIQUOR STORAGE TANK VENT		1.00E-3	1.00E-5								1.54E-1	1.55E-1	
P13	232	WASHERS, HOOD VENT		4.00E-8	5.00E-7								2.82E-2	2.38E+0	2.11E+0

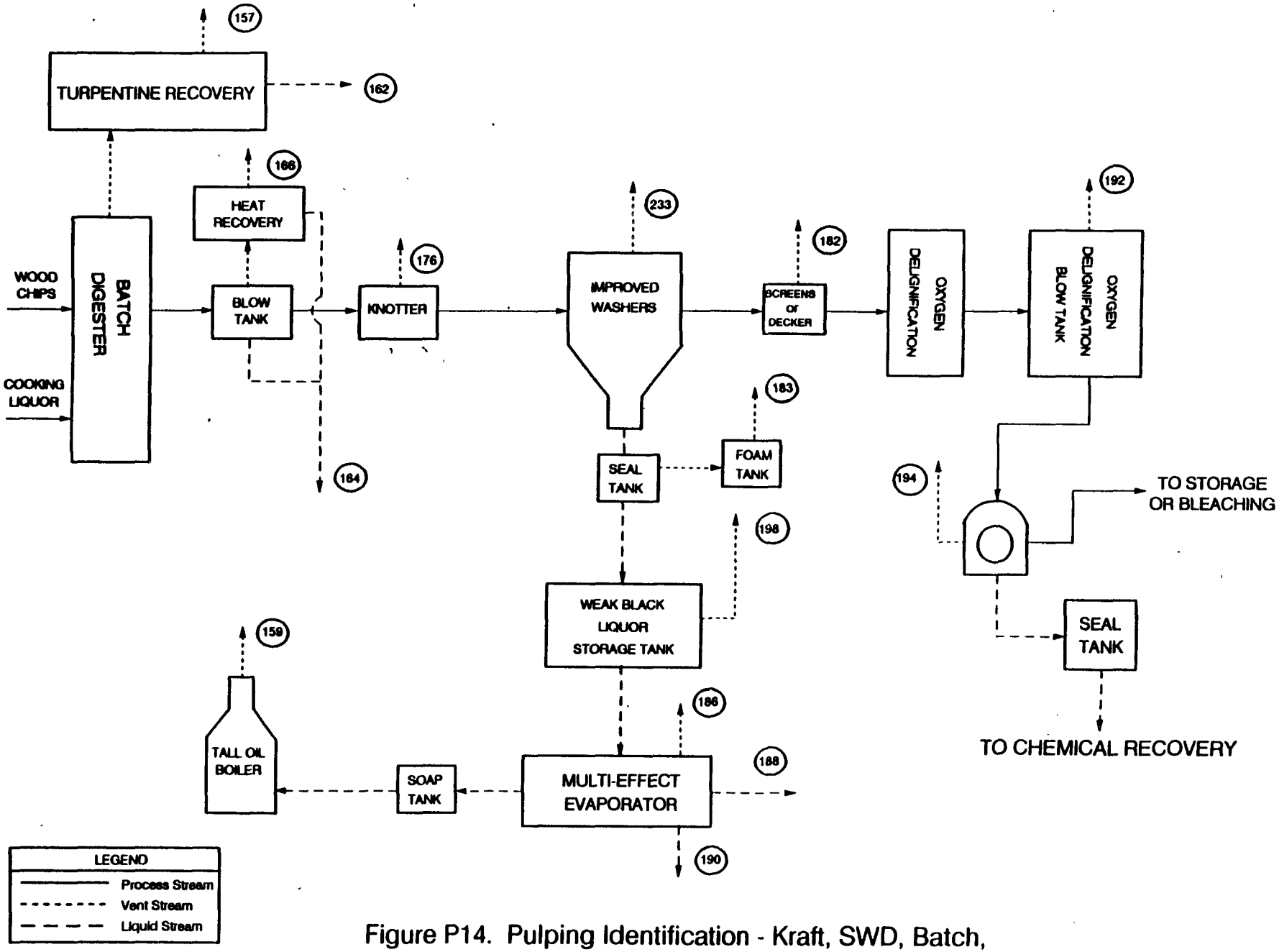

Figure P14. Pulping Identification - Kraft, SWD, Batch, Improved Washing, Oxygen Delignification

Model P14 - Stream Characteristics

MPU_CODE	EP_CODE	SOURCE	PROC_TYPE	PULP_TYP	WOOD_TYP	ENCLOSURE	SOURCE_TYP	VFLO_FAC	SFLO_FAC	VHAP_CON	SHAP_CON	HAL_STATUS
P14	157	NCG SYSTEM, TURPENTINE CONDENSER	PULP	KRAFT	SOFT		VENT	2.57E-3	1.10E-1	8.36E+2		N
P14	159	TALL OIL RECOVERY, BATCH VENT	PULP	KRAFT	SOFT		VENT	7.64E-3				N
P14	162	NCG SYSTEM, TURPENTINE CONDENSATES	PULP	KRAFT	SOFT		STREAM		1.10E-1		1.08E+4	N
P14	164	DIGESTERS, BLOW CONDENSATES	PULP	KRAFT	SOFT		STREAM		1.40E+0		1.76E+2	N
P14	166	DIGESTERS, BLOW GASES	PULP	KRAFT	SOFT		VENT	1.30E+0		1.61E-1		N
P14	176	KNOTTERS, HOOD VENT	PULP	KRAFT	SOFT	1	VENT	9.00E-1		3.42E+2		N
P14	182	WASHERS, DECKERS/ SCREENS	PULP	KRAFT	SOFT	1	VENT	9.00E-1		2.81E+0		N
P14	183	WASHERS, FOAM TANK VENT	PULP	KRAFT	SOFT		VENT	1.80E-1		5.60E+2		N
P14	186	EVAPORATORS, VENT	PULP	KRAFT	SOFT		VENT	2.70E-3		3.45E+2		N
P14	188	EVAPORATORS, CONDENSATES	PULP	KRAFT	SOFT		STREAM		4.90E+0		8.21E+1	N
P14	190	EVAPORATORS, SURFACE COND. CONDENSATES	PULP	KRAFT	SOFT		STREAM		4.20E+0		2.19E+1	N
P14	192	OXYGEN DELIGNIFICATION BLOW TANK	PULP	KRAFT	SOFT		VENT	2.60E-2		1.03E+3		N
P14	194	OXYGEN DELIGNIFICATION WASHER VENT	PULP	KRAFT	SOFT		VENT	1.80E-1		7.17E+2		N
P14	198	WEAK BLACK LIQUOR STORAGE TANK	PULP	KRAFT	SOFT		VENT	2.74E-3		8.28E+3		N
P14	233	WASHERS, HOOD VENT	PULP	KRAFT	SOFT		VENT	2.74E-2		5.47E+2		N

Model P14 - Emission Factor Summary

MPU_CODE	EP_CODE	SOURCE	ACET_EF	MEOH_EF	CTET_EF	MEK_EF	PCDB_EF	FORM_EF	HCL_EF	CL2_EF	MECL_EF	CHCL3_EF	L_BENZ_EF	PHENL_EF	MCHCL3EF	TCP245EF
P14	157	NCG SYSTEM, TURPENTINE CONDENSER	1.20E-4	3.20E-3		2.00E-4		8.00E-6								
P14	159	TALL OIL RECOVERY, BATCH VENT														
P14	162	NCG SYSTEM, TURPENTINE CONDENSATES	4.00E-3	5.00E-1		2.00E-3		6.00E-5								
P14	164	DIGESTERS, BLOW CONDENSATES	1.60E-3	1.00E-1		2.20E-3		1.00E-3								
P14	166	DIGESTERS, BLOW GASES	4.00E-5	2.40E-4		1.00E-4		1.70E-5								
P14	176	KNOTTERS, HOOD VENT	7.26E-3	3.11E-2		3.21E-3		6.91E-4								
P14	182	WASHERS, DECKERS/ SCREENS	7.35E-4	3.34E-3		2.20E-4		6.67E-5								
P14	183	WASHERS, FOAM TANK VENT	1.10E-2	1.76E-1		7.00E-3		2.00E-3								
P14	186	EVAPORATORS, VENT	7.00E-6	1.40E-3		6.00E-6		3.00E-5								
P14	188	EVAPORATORS, CONDENSATES	3.90E-3	1.50E-1		7.70E-3		5.00E-3								
P14	190	EVAPORATORS, SURFACE COND. CONDENSATES	9.75E-4	3.08E-2		1.77E-3		5.20E-3								
P14	192	OXYGEN DELIGNIFICATION BLOW TANK	1.00E-3	5.00E-2		2.00E-4										
P14	194	OXYGEN DELIGNIFICATION WASHER VENT	7.30E-2	7.60E-2		8.20E-2		5.97E-2								
P14	198	WEAK BLACK LIQUOR STORAGE TANK	1.00E-2	4.00E-2		1.00E-4		2.00E-3								
P14	233	WASHERS, HOOD VENT	1.50E-3	2.80E-2		2.00E-4		1.00E-5								

MPU_CODE	EP_CODE	SOURCE	PCP_EF	ACROLEINEF	PROPAL_EF	TOLUENE_EF	CMETHANEEF	TCDD_EF	TCDF_EF	ACETOPHNEF	CARBDIS_EF	HEXANE_EF	TOTHAPEF	TOTVOCEF	TRS_EF
P14	157	NCG SYSTEM, TURPENTINE CONDENSER		5.00E-7									4.04E-3	4.11E+0	2.68E+0
P14	159	TALL OIL RECOVERY, BATCH VENT												5.83E-3	1.02E-1
P14	162	NCG SYSTEM, TURPENTINE CONDENSATES		2.00E-6	2.20E-4								5.05E-1	9.74E-1	7.11E-2
P14	164	DIGESTERS, BLOW CONDENSATES		3.00E-5	2.00E-4								1.04E-1	3.42E-1	2.32E-1
P14	166	DIGESTERS, BLOW GASES		1.00E-6									3.93E-4	3.97E+0	4.02E+0
P14	176	KNOTTERS, HOOD VENT		4.33E-4	1.38E-4	2.43E-1						3.00E-1	5.79E-1	2.61E+0	
P14	182	WASHERS, DECKERS/ SCREENS		3.54E-5	1.24E-5	1.02E-3						3.20E-5	4.75E-3	2.34E-2	
P14	183	WASHERS, FOAM TANK VENT		7.00E-5	4.00E-4	4.00E-4							1.89E-1	1.62E+0	2.20E-1
P14	186	EVAPORATORS, VENT		3.00E-4									1.75E-3	3.07E+0	3.54E+0
P14	188	EVAPORATORS, CONDENSATES		2.00E-3	2.00E-3								1.71E-1	5.42E-1	5.25E-1
P14	190	EVAPORATORS, SURFACE COND. CONDENSATES			6.00E-4								3.91E-2	1.10E-1	2.64E-1
P14	192	OXYGEN DELIGNIFICATION BLOW TANK											5.02E-2	1.42E-1	
P14	194	OXYGEN DELIGNIFICATION WASHER VENT		2.00E-3	1.00E-2								2.43E-1	4.10E-1	
P14	198	WEAK BLACK LIQUOR STORAGE TANK		2.00E-5	4.00E-4								4.27E-2	6.87E-2	
P14	233	WASHERS, HOOD VENT		4.00E-8	5.00E-7								2.82E-2	2.38E+0	2.11E+0

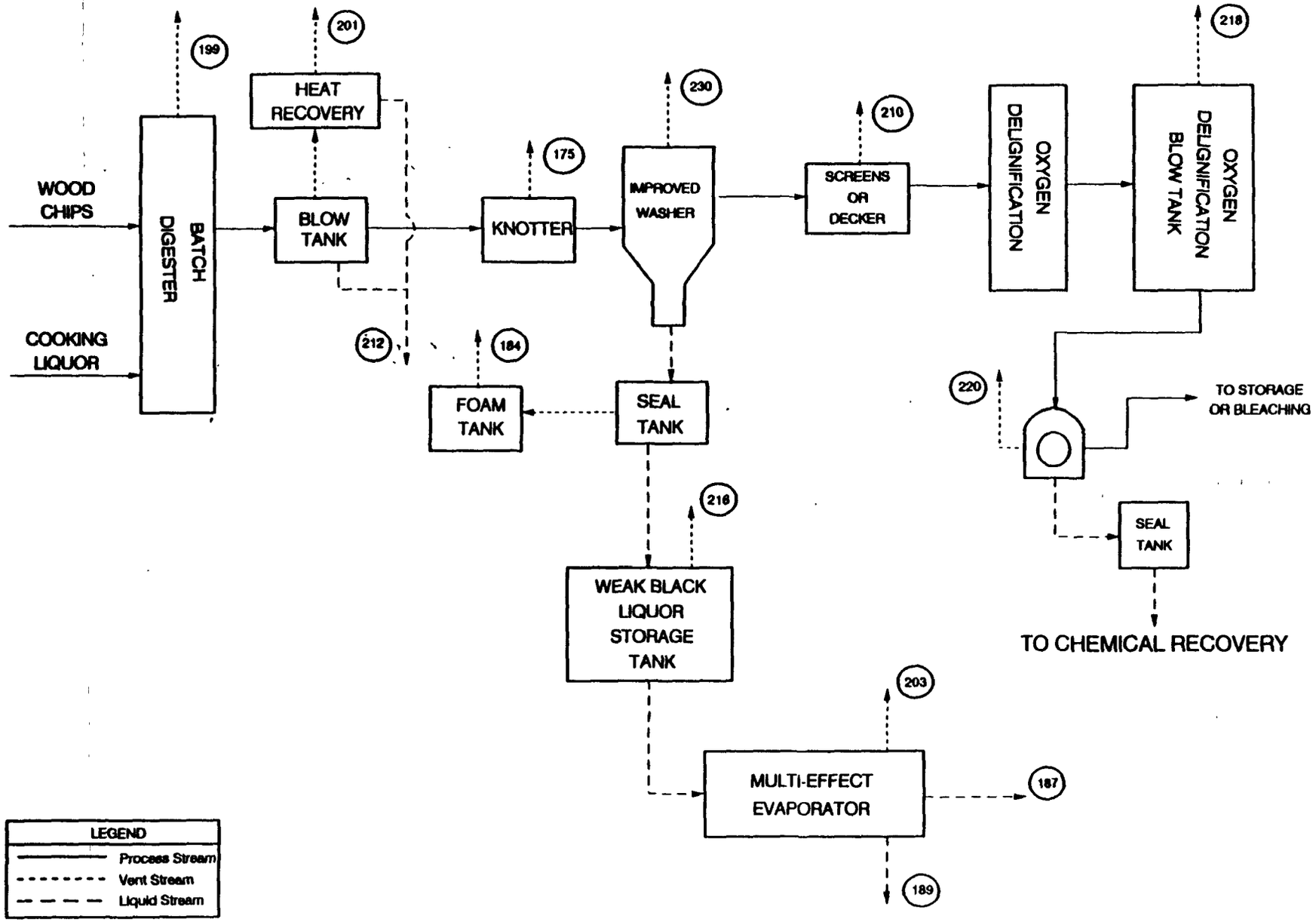

Figure P15. Pulping Identification - Sulfite, HWD, Improved Washing, Oxygen Delignification

Model P15 - Stream Characteristics

MPU_CODE	EP_CODE	SOURCE	PROC_TYPE	PULP_TYP	WOOD_TYP	ENCLOSURE	SOURCE_TYP	VFLO_FAC	SFLO_FAC	VHAP_CON	SHAP_CON	HAL_STATUS
P15	175	KNOTTER, HOOD VENT	PULP	SULFITE	HARD	1	VENT	9.00E-1		5.67E+1		N
P15	184	WASHER, FOAM TANK VENT	PULP	SULFITE	HARD		VENT	1.80E-1		5.96E+2		N
P15	187	EVAPORATORS, CONDENSATES	PULP	SULFITE	HARD		STREAM		4.90E+0		1.46E+3	N
P15	189	EVAPORATORS, SURFACE COND. CONDENSATES	PULP	SULFITE	HARD		STREAM		4.20E+0		3.53E+2	N
P15	199	DIGESTERS, RELIEF GASES	PULP	SULFITE	HARD		VENT	2.57E-3		4.65E+3		N
P15	201	DIGESTERS, BLOW GASES	PULP	SULFITE	HARD		VENT	1.30E+0		9.19E+0		N
P15	203	EVAPORATORS, MULTI EFFECT EVAP. VENT	PULP	SULFITE	HARD		VENT	2.70E-3		4.13E+3		N
P15	210	WASHER, DECKER VENT	PULP	SULFITE	HARD	1	VENT	9.00E-1		1.33E+1		N
P15	212	DIGESTERS, BLOW CONDENSATES	PULP	SULFITE	HARD		STREAM		1.40E+0		9.06E+1	N
P15	216	WEAK BLACK LIQUOR STORAGE TANK	PULP	SULFITE	HARD		VENT	2.74E-3		5.95E+4		N
P15	218	OXYGEN DELIGNIFICATION BLOW TANK	PULP	SULFITE	HARD		VENT	2.60E-2		3.82E+2		N
P15	220	OXYGEN DELIGNIFICATION WASHER VENT	PULP	SULFITE	HARD		VENT	1.80E-1		7.17E+2		N
P15	230	WASHER, HOOD VENT	PULP	SULFITE	HARD		VENT	2.74E-2		4.49E-1		N

Model P15 - Emission Factor Summary

MPU_CODE	EP_CODE	SOURCE	ACET_EF	MEOH_EF	CTET_EF	MEK_EF	PCDB_EF	FORM_EF	HCL_EF	CL2_EF	MECL_EF	CHCL3_EF	L_BENZ_EF	PHENL_EF	MCHCL3EF	TCP245EF
P15	175	KNOTTER, HOOD VENT	5.06E-3	2.07E-2		8.04E-3		1.15E-3								
P15	184	WASHER, FOAM TANK VENT	3.80E-2	1.86E-1		7.27E-3		3.26E-3								
P15	187	EVAPORATORS, CONDENSATES	1.00E-2	3.00E+0		3.00E-2		5.00E-3								
P15	189	EVAPORATORS, SURFACE COND. CONDENSATES	2.50E-3	6.15E-1		6.90E-3		5.20E-3								
P15	199	DIGESTERS, RELIEF GASES	1.98E-4	1.18E-2		2.89E-4		6.91E-5								
P15	201	DIGESTERS, BLOW GASES	1.98E-4	1.18E-2		2.89E-4		6.91E-5								
P15	203	EVAPORATORS, MULTI EFFECT EVAP. VENT	2.00E-4	2.00E-2		8.50E-4		4.00E-5								
P15	210	WASHER, DECKER VENT	1.98E-4	1.18E-2		2.89E-4		6.91E-5								
P15	212	DIGESTERS, BLOW CONDENSATES	3.00E-4	5.00E-2		2.00E-4		5.00E-4								
P15	216	WEAK BLACK LIQUOR STORAGE TANK	2.00E-3	3.00E-1		4.00E-4		2.00E-3								
P15	218	OXYGEN DELIGNIFICATION BLOW TANK	4.82E-3	4.72E-3		7.91E-3		4.15E-3								
P15	220	OXYGEN DELIGNIFICATION WASHER VENT	7.30E-2	7.60E-2		8.20E-2		6.00E-2								
P15	230	WASHER, HOOD VENT	6.60E-6	2.00E-5		1.10E-7		2.50E-6								

MPU_CODE	EP_CODE	SOURCE	PCP_EF	ACROLEINEF	PROPAL_EF	TOLUENE_EF	CHETHANEEF	TCDD_EF	TCDF_EF	ACETOPHNEF	CARBDIS_EF	HEXANE_EF	TOTHAPEF	TOTVOCEF	TRS_EF
P15	175	KNOTTER, HOOD VENT		8.13E-4		6.00E-3				3.00E-3		5.10E-2	9.60E-2	8.14E-1	
P15	184	WASHER, FOAM TANK VENT		1.42E-3	5.59E-4	2.31E-3						3.24E-5	2.02E-1	5.81E-1	2.20E-1
P15	187	EVAPORATORS, CONDENSATES			5.00E-4								3.04E+0	3.22E+0	5.25E-1
P15	189	EVAPORATORS, SURFACE COND. CONDENSATES		1.10E-4	1.50E-4								6.29E-1	7.10E-1	2.64E-1
P15	199	DIGESTERS, RELIEF GASES		1.79E-3	1.41E-5	8.48E-3							2.25E-2	5.37E+0	2.52E-1
P15	201	DIGESTERS, BLOW GASES		1.79E-3	1.41E-5	8.48E-3							2.25E-2	5.22E+0	1.28E-1
P15	203	EVAPORATORS, MULTI EFFECT EVAP. VENT											2.10E-2	3.22E+0	5.50E-1
P15	210	WASHER, DECKER VENT		1.79E-3	1.41E-5	8.48E-3							2.25E-2	5.15E+0	
P15	212	DIGESTERS, BLOW CONDENSATES		3.00E-3	5.00E-5	4.00E-6							5.38E-2	3.58E-1	3.30E-1
P15	216	WEAK BLACK LIQUOR STORAGE TANK		4.00E-3	3.00E-4								3.07E-1	9.55E-1	
P15	218	OXYGEN DELIGNIFICATION BLOW TANK		1.30E-4	7.40E-4								1.87E-2	2.35E-2	
P15	220	OXYGEN DELIGNIFICATION WASHER VENT		1.60E-3	1.00E-2								2.43E-1	3.16E-1	
P15	230	WASHER, HOOD VENT		1.40E-7	1.00E-8	1.20E-7							2.31E-5	1.00E-2	1.00E-2

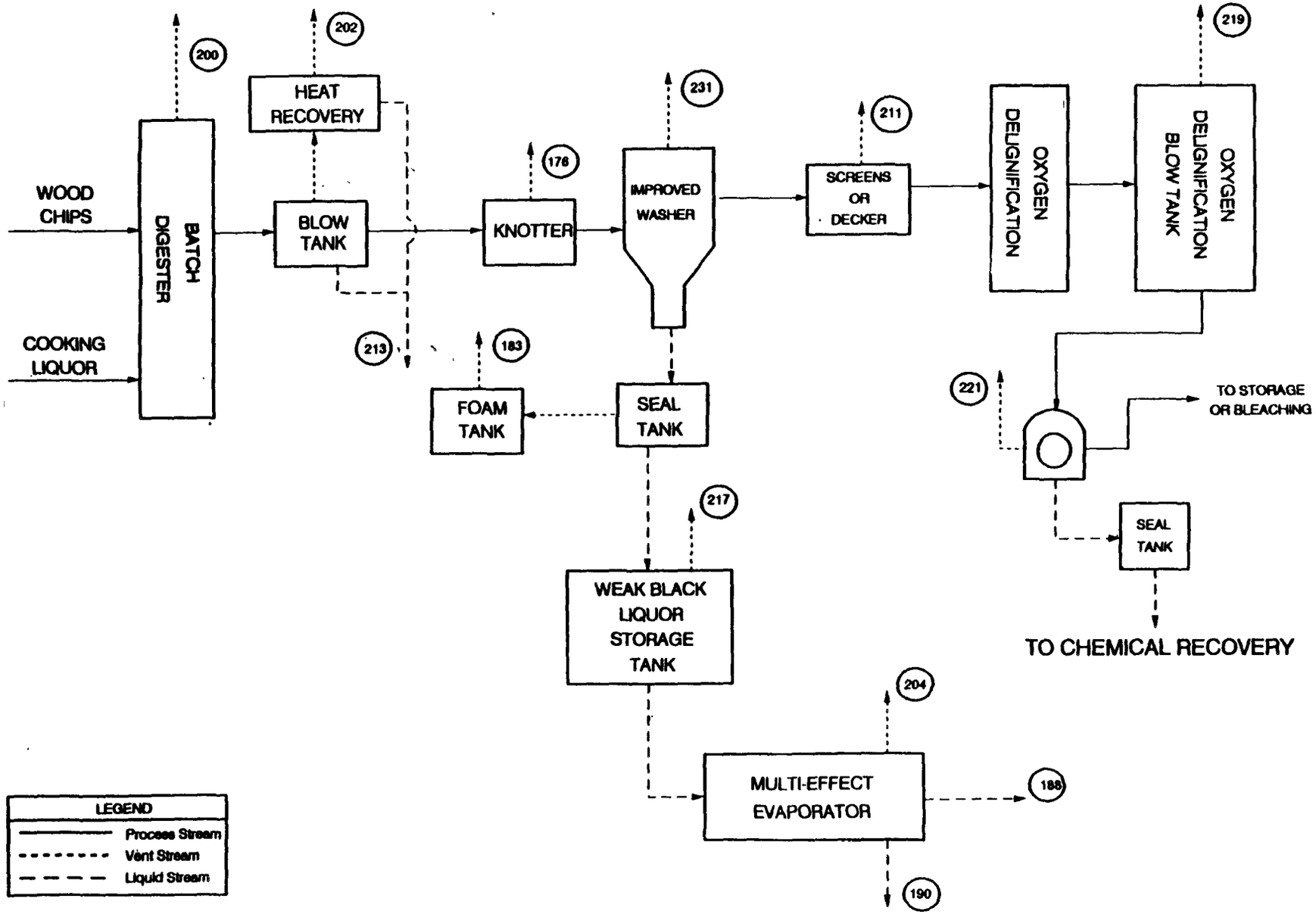

Figure P16. Pulping Identification - Sulfite, SWD, Improved Washing, Oxygen Delignification

Model P16 Stream Characteristics

MPU_CODE	EP_CODE	SOURCE	PROC_TYPE	PULP_TYP	WOOD_TYP	ENCLOSURE	SOURCE_TYP	VFLO_FAC	SFLO_FAC	VHAP_CON	SHAP_CON	HAL_STATUS
P16	176	KNOTTER, HOOD VENT	PULP	SULFITE	SOFT	1	VENT	9.00E-1		3.42E+2		N
P16	183	WASHER, FOAM TANK VENT	PULP	SULFITE	SOFT		VENT	1.80E-1		5.60E+2		N
P16	188	EVAPORATORS, CONDENSATES	PULP	SULFITE	SOFT		STREAM		4.90E+0		8.21E+1	N
P16	190	EVAPORATORS, SURFACE COND. CONDENSATES	PULP	SULFITE	SOFT		STREAM		4.20E+0		2.19E+1	N
P16	200	DIGESTER, RELIEF GASES	PULP	SULFITE	SOFT		VENT	2.57E-3		4.65E+3		N
P16	202	DIGESTERS, BLOW GASES	PULP	SULFITE	SOFT		VENT	1.30E+0		2.91E+1		N
P16	204	EVAPORATORS, MULTI EFFECT EVAP. VENT	PULP	SULFITE	SOFT		VENT	2.70E-3		3.45E+2		N
P16	211	WASHER, DECKER VENT	PULP	SULFITE	SOFT	1	VENT	9.00E-1		1.33E+1		N
P16	213	DIGESTERS, BLOW CONDENSATES	PULP	SULFITE	SOFT		STREAM		1.40E+0		9.06E+1	N
P16	217	WEAK BLACK LIQUOR STORAGE TANK VENT	PULP	SULFITE	SOFT		VENT	2.74E-3		5.95E+4		N
P16	219	OXYGEN DELIGNIFICATION BLOW TANK	PULP	SULFITE	SOFT		VENT	2.60E-2		1.03E+3		N
P16	221	OXYGEN DELIGNIFICATION WASHER VENT	PULP	SULFITE	SOFT		VENT	1.80E-1		7.17E+2		N
P16	231	WASHER, HOOD VENT	PULP	SULFITE	SOFT		VENT	2.74E-2		4.49E-1		N

Model P16 - Emission Factor Summary

MPU_CODE	EP_CODE	SOURCE	ACET_EF	MEOH_EF	CTET_EF	MEK_EF	PCDB_EF	FORM_EF	HCL_EF	CL2_EF	MECL_EF	CHCL3_EF	L_BENZ_EF	PHENL_EF	MCHCL3EF	TCP245EF
P16	176	KNOTTER, HOOD VENT	7.26E-3	3.11E-2		3.21E-3		6.91E-4								
P16	183	WASHER, FOAM TANK VENT	1.10E-2	1.76E-1		7.00E-3		2.00E-3								
P16	188	EVAPORATORS, CONDENSATES	3.90E-3	1.50E-1		7.70E-3		5.00E-3								
P16	190	EVAPORATORS, SURFACE COND. CONDENSATES	9.75E-4	3.08E-2		1.77E-3		5.20E-3								
P16	200	DIGESTER, RELIEF GASES	1.98E-4	1.18E-2		2.89E-4		6.91E-5								
P16	202	DIGESTERS, BLOW GASES	5.00E-4	7.00E-2		4.00E-5		4.00E-6								
P16	204	EVAPORATORS, MULTI EFFECT EVAP. VENT	7.00E-6	1.40E-3		6.00E-6		3.00E-5								
P16	211	WASHER, DECKER VENT	1.98E-4	1.18E-2		2.89E-4		6.91E-5								
P16	213	DIGESTERS, BLOW CONDENSATES	3.00E-4	5.00E-2		2.00E-4		5.00E-4								
P16	217	WEAK BLACK LIQUOR STORAGE TANK VENT	2.00E-3	3.00E-1		4.00E-4		2.00E-3								
P16	219	OXYGEN DELIGNIFICATION BLOW TANK	1.00E-3	5.00E-2		2.00E-4										
P16	221	OXYGEN DELIGNIFICATION WASHER VENT	7.30E-2	7.60E-2		8.20E-2		6.00E-2								
P16	231	WASHER, HOOD VENT	6.60E-6	2.00E-5		1.10E-7		2.50E-6								

Model P16 - Emission Factor Summary

08/12/93

MPU_CODE	EP_CODE	SOURCE	PCP_EF	ACROLEINEF	PROPAL_EF	TOLUENE_EF	CMETHANEEF	TCDD_EF	TCDF_EF_	ACETOPHNEF	CARBDIS_EF	HEXANE_EF	TOTHAPEF	TOTVOCEF	TRS_EF
P16	176	KNOTTER, HOOD VENT		4.33E-4	1.38E-4	2.43E-1						3.00E-1	5.79E-1	2.61E+0	
P16	183	WASHER, FOAM TANK VENT		7.00E-5	4.00E-4	4.00E-4							1.89E-1	1.62E+0	2.20E-1
P16	188	EVAPORATORS, CONDENSATES		2.00E-3	2.00E-3								1.71E-1	5.42E-1	5.25E-1
P16	190	EVAPORATORS, SURFACE COND. CONDENSATES			6.00E-4								3.91E-2	1.10E-1	2.64E-1
P16	200	DIGESTER, RELIEF GASES		1.79E-3	1.41E-5	8.48E-3							2.25E-2	5.38E+0	2.57E-1
P16	202	DIGESTERS, BLOW GASES		5.00E-6	6.00E-5	5.00E-6							7.11E-2	2.49E-1	1.28E-1
P16	204	EVAPORATORS, MULTI EFFECT EVAP. VENT		3.00E-4									1.75E-3	9.06E-1	5.50E-1
P16	211	WASHER, DECKER VENT		1.79E-3	1.41E-5	8.48E-3							2.25E-2	5.15E+0	
P16	213	DIGESTERS, BLOW CONDENSATES		3.00E-3	5.00E-5	4.00E-6							5.38E-2	3.58E-1	3.30E-1
P16	217	WEAK BLACK LIQUOR STORAGE TANK VENT		4.00E-3	3.00E-4								3.07E-1	9.55E-1	
P16	219	OXYGEN DELIGNIFICATION BLOW TANK											5.02E-2	1.42E-1	
P16	221	OXYGEN DELIGNIFICATION WASHER VENT		1.60E-3	1.00E-2								2.43E-1	3.16E-1	
P16	231	WASHER, HOOD VENT		1.40E-7	1.00E-8	1.20E-7							2.31E-5	1.00E-2	1.00E-2

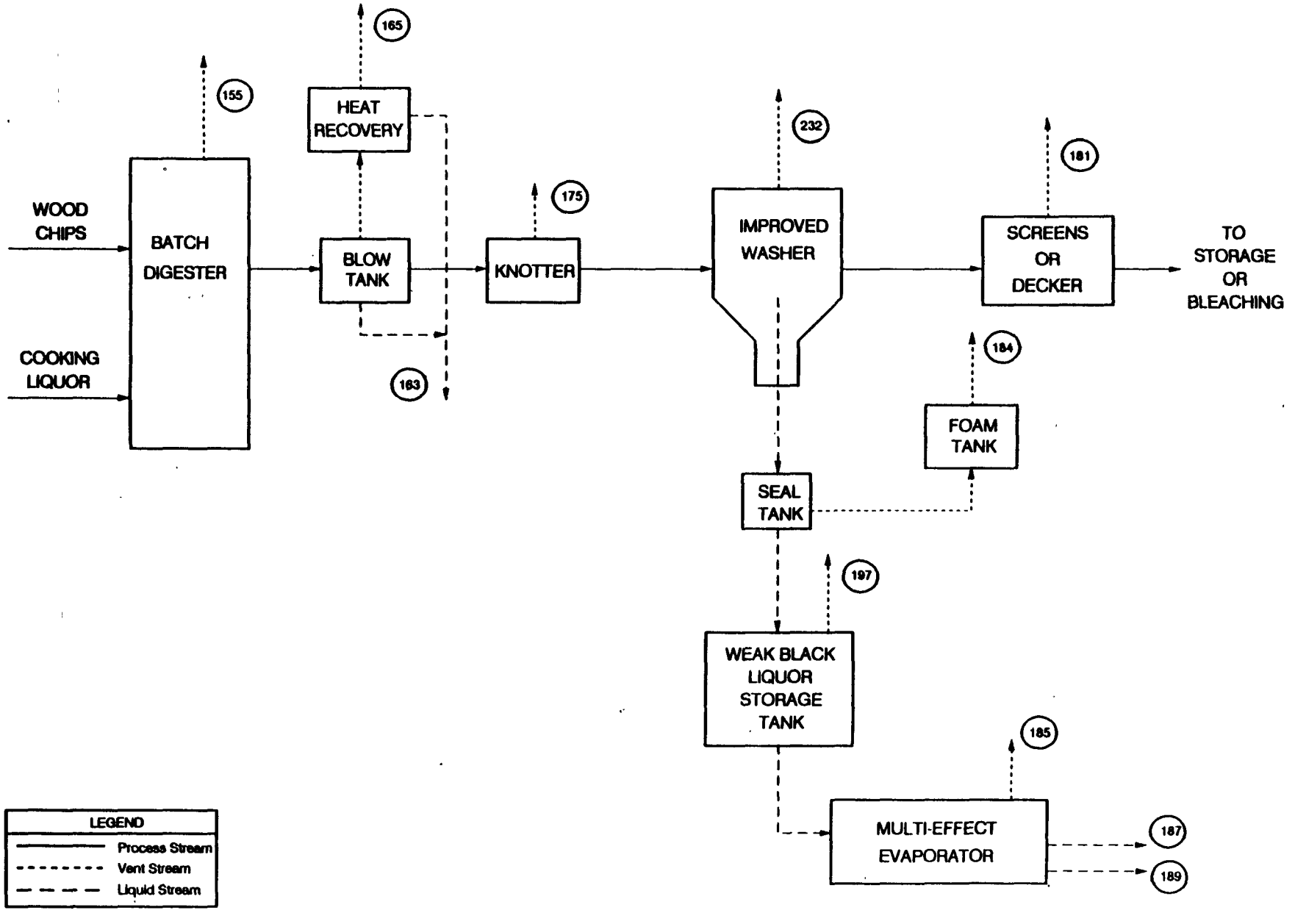

Figure P17. Pulping Identification - Kraft, HWD, Batch, Improved Washing

Model P17 - Stream Characteristics

MPU_CODE	EP_CODE	SOURCE	PROC_TYPE	PULP_TYP	WOOD_TYP	ENCLOSURE	SOURCE_TYP	VFLO_FAC	SFLO_FAC	VHAP_CON	SHAP_CON	HAL_STATUS
P17	155	Digesters, relief gases	PULP	KRAFT	HARD		VENT	2.57E-3		8.69E+2		N
P17	163	Digesters, blow condensates	PULP	KRAFT	HARD		STREAM		1.40E+0		9.96E+2	N
P17	165	Digesters, blow gases	PULP	KRAFT	HARD		VENT	1.30E+0		4.18E+1		N
P17	175	Knotters, hood vent	PULP	KRAFT	HARD	1	VENT	9.00E-1		5.67E+1		N
P17	181	WASHERS, DECKERS/SCREENS	PULP	KRAFT	HARD	1	VENT	9.00E-1		2.03E+0		N
P17	184	Washers, foam tank	PULP	KRAFT	HARD		VENT	1.80E-1		5.96E+2		N
P17	185	Evaporators, vent	PULP	KRAFT	HARD		VENT	2.70E-3		4.13E+3		N
P17	187	Evaporators, condensates	PULP	KRAFT	HARD		STREAM		4.90E+0		1.46E+3	N
P17	189	Evaporators, surface cond. condensates	PULP	KRAFT	HARD		STREAM		4.20E+0		3.53E+2	N
P17	197	WEAK BLACK LIQUOR STORAGE TANK	PULP	KRAFT	HARD		VENT	2.74E-3		2.99E+4		N
P17	232	Washers, hood vent	PULP	KRAFT	HARD		VENT	2.74E-2		5.47E+2		N

Model P17 - Emission Factor Summary

MPU_CODE	EP_CODE	SOURCE	ACET_EF	MEOH_EF	CTET_EF	MEK_EF	PCDB_EF	FORM_EF	HCL_EF	CL2_EF	MECL_EF	CHCL3_EF	L_BENZ_EF	PHENL_EF	MCHCL3EF	TCP245EF
P17	155	Digesters, relief gases	6.40E-5	3.20E-3		8.00E-4		3.00E-5								
P17	163	Digesters, blow condensates	1.20E-3	5.90E-1		1.20E-3										
P17	165	Digesters, blow gases	1.52E-3	6.21E-3		2.41E-3		3.46E-4								
P17	175	Knotters, hood vent	5.06E-3	2.07E-2		8.04E-3		1.15E-3								
P17	181	WASHERS, DECKERS/SCREENS	5.12E-4	2.23E-3		5.50E-4		1.11E-4								
P17	184	Washers, foam tank	3.80E-2	1.86E-1		7.27E-3		3.26E-3								
P17	185	Evaporators, vent	2.00E-4	2.00E-2		8.50E-4		4.00E-5								
P17	187	Evaporators, condensates	1.00E-2	3.00E+0		3.00E-2		5.00E-3								
P17	189	Evaporators, surface cond. condensates	2.50E-3	6.15E-1		6.90E-3		5.20E-3								
P17	197	WEAK BLACK LIQUOR STORAGE TANK	5.00E-4	1.00E-1		1.00E-3		2.00E-3								
P17	232	Washers, hood vent	1.50E-3	2.80E-2		2.00E-4		1.00E-5								

MPU_CODE	EP_CODE	SOURCE	PCP_EF	ACROLEINEF	PROPAL_EF	TOLUENE_EF	CHETHANEEF	TCDD_EF	TCDF_EF	ACETOPHNEF	CARBDIS_EF	HEXANE_EF	TOTHAPEF	TOTVOCEF	TRS_EF
P17	155	Digesters, relief gases											4.20E-3	2.59E+0	2.62E+0
P17	163	Digesters, blow condensates											5.91E-1	8.59E-1	3.30E-1
P17	165	Digesters, blow gases		2.44E-4		4.24E-3				2.22E-3		8.50E-2	1.02E-1	4.37E+0	4.02E+0
P17	175	Knotters, hood vent		8.13E-4		6.00E-3				3.00E-3		5.10E-2	9.60E-2	8.14E-1	
P17	181	WASHERS, DECKERS/SCREENS		6.64E-5		2.53E-5				1.24E-5		5.43E-6	3.44E-3	9.06E-3	
P17	184	Washers, foam tank		1.42E-3	5.59E-4	2.31E-3						3.24E-5	2.02E-1	5.81E-1	2.20E-1
P17	185	Evaporators, vent											2.10E-2	5.39E+0	3.54E+0
P17	187	Evaporators, condensates			5.00E-4								3.04E+0	3.22E+0	5.25E-1
P17	189	Evaporators, surface cond. condensates		1.10E-4	1.50E-4								6.29E-1	7.10E-1	2.64E-1
P17	197	WEAK BLACK LIQUOR STORAGE TANK		1.00E-3	1.00E-5								1.54E-1	1.55E-1	
P17	232	Washers, hood vent		4.00E-8	5.00E-7								2.82E-2	2.38E+0	2.11E+0

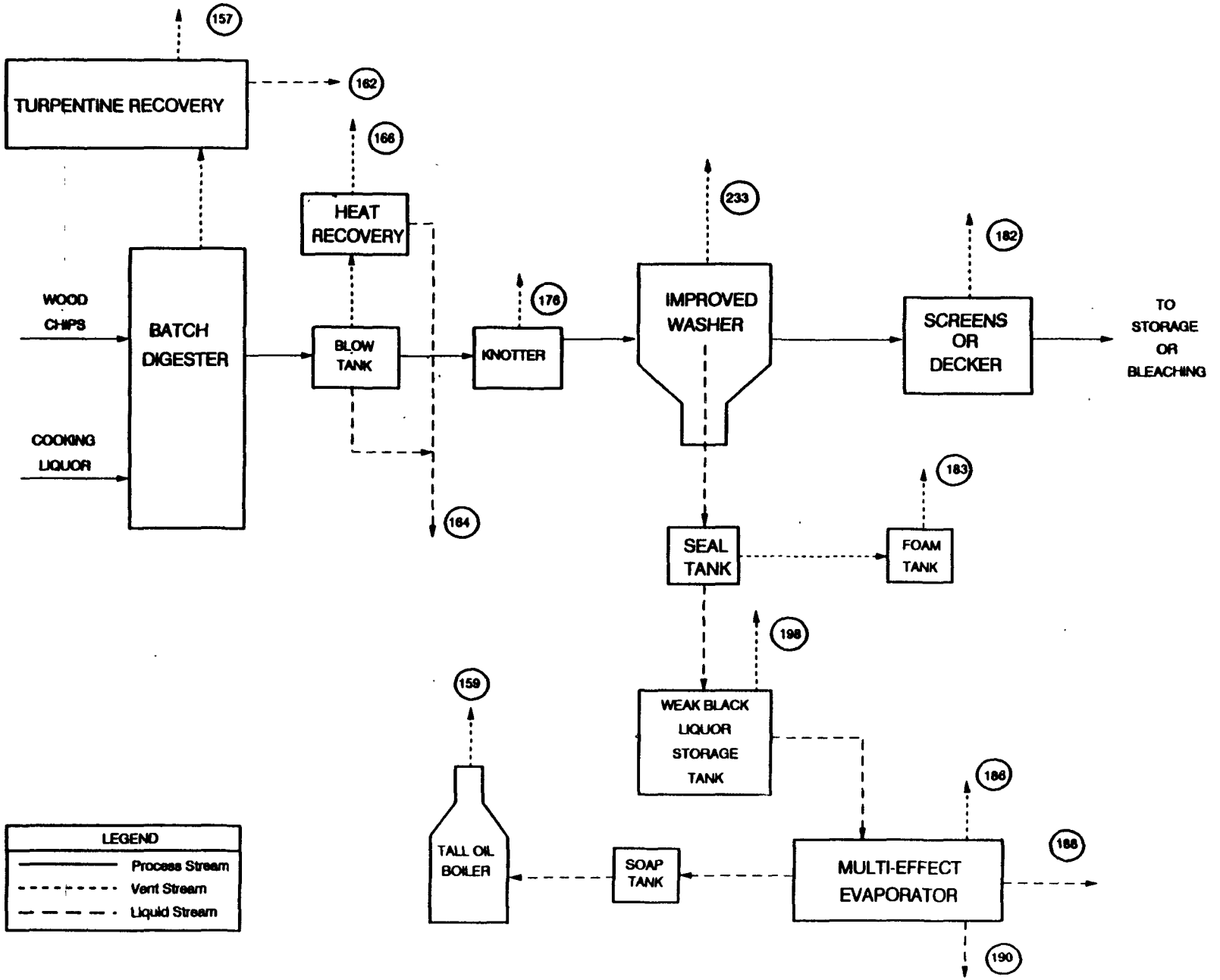

Figure P18. Pulping Identification - Kraft, SWD, Batch, Improved Washing

Model P18 - Stream Characteristics

MPU_CODE	EP_CODE	SOURCE	PROC_TYPE	PULP_TYP	WOOD_TYP	ENCLOSURE	SOURCE_TYP	VFLO_FAC	SFLO_FAC	VHAP_CON	SHAP_CON	HAL_STATUS
P18	157	NCG System, turpentine condenser	PULP	KRAFT	SOFT		VENT	2.57E-3	1.10E-1	8.36E+2		N
P18	159	Tall Oil Recovery, batch vent	PULP	KRAFT	SOFT		VENT	7.64E-3				N
P18	162	NCG System, turpentine condensates	PULP	KRAFT	SOFT		STREAM		1.10E-1		1.08E+4	N
P18	164	Digesters, blow condensates	PULP	KRAFT	SOFT		STREAM		1.40E+0		1.76E+2	N
P18	166	Digesters, blow gases	PULP	KRAFT	SOFT		VENT	1.30E+0		1.61E-1		N
P18	176	Knotters, hood vent	PULP	KRAFT	SOFT	1	VENT	9.00E-1		3.42E+2		N
P18	182	WASHERS, DECKERS/SCREENS	PULP	KRAFT	SOFT	1	VENT	9.00E-1		2.81E+0		N
P18	183	Washers, foam tank	PULP	KRAFT	SOFT		VENT	1.80E-1		5.60E+2		N
P18	186	Evaporators, vent	PULP	KRAFT	SOFT		VENT	2.70E-3		3.45E+2		N
P18	188	Evaporators, condensates	PULP	KRAFT	SOFT		STREAM		4.90E+0		8.21E+1	N
P18	190	Evaporators, surface cond. condensates	PULP	KRAFT	SOFT		STREAM		4.20E+0		2.19E+1	N
P18	198	WEAK BLACK LIQUOR STORAGE TANK	PULP	KRAFT	SOFT		VENT	2.74E-3		8.28E+3		N
P18	233	Washers, hood vent	PULP	KRAFT	SOFT		VENT	2.74E-2		5.47E+2		N

Model P18 - Emission Factor Summary

MPU_CODE	EP_CODE	SOURCE	ACET_EF	MEOH_EF	CTET_EF	MEK_EF	PCDB_EF	FORM_EF	HCL_EF	CL2_EF	MECL_EF	CHCL3_EF	L_BENZ_EF	PHENL_EF	M.HCL3EF	TCP245EF
P18	157	NCG System, turpentine condenser	1.20E-4	3.20E-3		2.00E-4		8.00E-6								
P18	159	Tall Oil Recovery, batch vent														
P18	162	NCG System, turpentine condensates	4.00E-3	5.00E-1		2.00E-3		6.00E-5								
P18	164	Digesters, blow condensates	1.60E-3	1.00E-1		2.20E-3		1.00E-3								
P18	166	Digesters, blow gases	4.00E-5	2.40E-4		1.00E-4		1.70E-5								
P18	176	Knotters, hood vent	7.26E-3	3.11E-2		3.21E-3		6.91E-4								
P18	182	WASHERS, DECKERS/SCREENS	7.35E-4	3.34E-3		2.20E-4		6.67E-5								
P18	183	Washers, foam tank	1.10E-2	1.76E-1		7.00E-3		2.00E-3								
P18	186	Evaporators, vent	7.00E-6	1.40E-3		6.00E-6		3.00E-5								
P18	188	Evaporators, condensates	3.90E-3	1.50E-1		7.70E-3		5.00E-3								
P18	190	Evaporators, surface cond. condensates	9.75E-4	3.08E-2		1.77E-3		5.20E-3								
P18	198	WEAK BLACK LIQUOR STORAGE TANK	1.00E-2	4.00E-2		1.00E-4		2.00E-3								
P18	233	Washers, hood vent	1.50E-3	2.80E-2		2.00E-4		1.00E-5								

MPU_CODE	EP_CODE	SOURCE	PCP_EF	ACROLEINEF	PROPAL_EF	TOLUENE_EF	CMETHANEEF	TCDD_EF	TCDF_EF	ACETOPHNEF	CARBDIS_EF	HEXANE_EF	TOTHAPEF	TOTVOCEF	TRS_EF
P18	157	NCG System, turpentine condenser		5.00E-7									4.04E-3	4.11E+0	2.68E+0
P18	159	Tall Oil Recovery, batch vent												5.83E-3	1.02E-1
P18	162	NCG System, turpentine condensates		2.00E-6	2.20E-4								5.05E-1	9.74E-1	7.11E-2
P18	164	Digesters, blow condensates		3.00E-5	2.00E-4								1.04E-1	3.42E-1	2.32E-1
P18	166	Digesters, blow gases		1.00E-6									3.93E-4	3.97E+0	4.02E+0
P18	176	Knotters, hood vent		4.33E-4	1.38E-4	2.43E-1						3.00E-1	5.79E-1	2.61E+0	
P18	182	WASHERS, DECKERS/SCREENS		3.54E-5	1.24E-5	1.02E-3						3.20E-5	4.75E-3	2.34E-2	
P18	183	Washers, foam tank		7.00E-5	4.00E-4	4.00E-4							1.89E-1	1.62E+0	2.20E-1
P18	186	Evaporators, vent		3.00E-4									1.75E-3	3.07E+0	3.54E+0
P18	188	Evaporators, condensates		2.00E-3	2.00E-3								1.71E-1	5.42E-1	5.25E-1
P18	190	Evaporators, surface cond. condensates			6.00E-4								3.91E-2	1.10E-1	2.64E-1
P18	198	WEAK BLACK LIQUOR STORAGE TANK		2.00E-5	4.00E-4								4.27E-2	6.87E-2	
P18	233	Washers, hood vent		4.00E-8	5.00E-7								2.82E-2	2.38E+0	2.11E+0

APPENDIX C.2

BLEACHING MODEL PROCESS UNITS

This appendix presents emission points, emission factors, and vent and wastewater stream characteristics for each of the 12 bleaching model process units (MPU's) presented in Chapter 4.0. The MPU's are defined based on wood type, bleaching sequence, and percent chlorine dioxide substitution level (see following summary table). The following figures (B1-B12) represent the emission points associated with each model process. Tables following each figure identify the emission points within the model and the associated emission factors and process vent and wastewater stream characteristics of each emission point in the MPU. These characteristics include:

- Flow rate factor; and
- Hazardous air pollutant concentration.

The assumptions and derivation of the emission factors are presented in Appendix B.

The following example presents how a model process unit would be assigned (or "mapped") to the bleaching process at a pulp mill. Assume the same mill in Appendix C.1 has two bleaching lines, one dedicated to bleaching hardwood (1000 tons per day), the other bleaching softwood (1000 tons per day). The hardwood line uses a CdEHD process with 30% chlorine dioxide substitution. Because hypochlorite use has been determined to result in increased chloroform generation, the existence of a hypochlorite stage was designated a higher criterion in model assignment than chlorine dioxide

substitution. Therefore, using the bleaching model summary table as a guide, the B1 model process unit representing hardwood pulp and hypochlorite use is assigned.

The second bleaching line utilizes a OCdEDDED with 60% chlorine dioxide substitution. First, since the oxygen delignification stage was assigned as part of the Kraft softwood continuous model (P12) in Appendix C.1, the O stage is not a factor in the model assignment. Second, the model process units represent the emissions from a process line, so inexact matches are possible; however, the models incorporate the elements that most significantly influence emissions. Therefore, using the summary table as a guide, this sequence would be assigned the softwod CdEDED (High) model (B8). Definition of terms and references are presented in Appendix C.3.

The emissions from either process may then be estimated using the appropriate figures and tables. For example, the chloroform emissions from the hardwood hypochlorite washer would be estimated using the following steps:

1. Identify emission point code (EP_CODE): for model B1, the hypochlorite stage washer is 151;
2. Identify the associated emission point emission factor ("Compound"_EF): for chloroform (CHCL3_EP), the factor is 0.04 kg/Mg pulp;
3. Multiply factor by process line capacity:

$$\frac{0.04 \text{ kg chloroform}}{\text{Mg Pulp}} \times \frac{1000 \text{ Ton pulp}}{\text{Day}} \times \frac{1 \text{ Mg}}{1.1 \text{ Ton}} = \frac{36.4 \text{ kg chloroform}}{\text{Day}}$$

4. Convert to annual emissions, assuming mill operates 350 days per year:

$$\frac{36.4 \text{ kg chloroform}}{\text{Day}} \times \frac{350 \text{ Day}}{\text{Year}} = \frac{12{,}700 \text{ kg chloroform}}{\text{Year}}$$

SUMMARY TABLE OF BLEACHING MODEL PROCESS UNITS

Model process unit	Bleaching sequence (% ClO_2 substitution)[a]	Wood type
B-1	CEHD (0%)	Hard
B-2	CEHD (0%)	Soft
B-3	CEDED (0%)	Hard
B-4	CEDED (0%)	Soft
B-5	CdEDED (low)[b]	Hard
B-6	CdEDED (low)[b]	Soft
B-7	CdEDED (high)[c]	Hard
B-8	CdEDED (high)[c]	Soft
B-9	CdEDED (100%)	Hard
B-10	CdEDED (100%)	Soft
B-11	O-E[d]	Hard
B-12	O-E[d]	Soft

[a] Key:
- C = Chlorine
- Cd = Chlorine dioxide substituted for chlorine
- D = Chlorine dioxide
- E = Extraction
- O = Oxygen/Ozone

[b] A low substitution range is 10 to 50 percent substitution. Less than 10 percent is considered to have the same emissions as 0 percent substitution.

[c] A high substitution range is 50 to 90 percent substitution. Greater than 90 percent is considered to have the same emissions as 100 percent substitution.

[d] An oxygen delignification precedes this sequence and is part of the associated pulping model for the process.

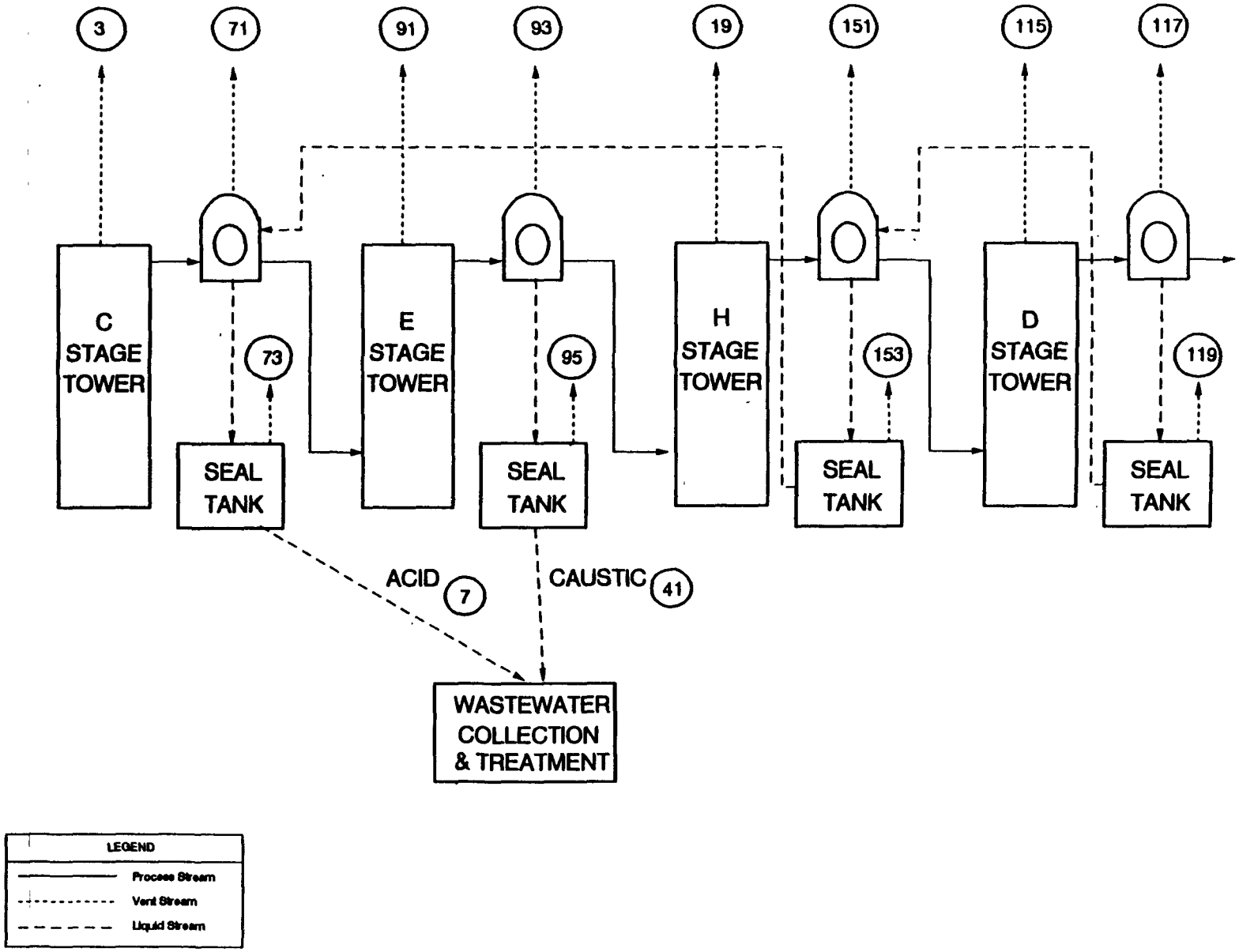

Figure B1. Bleaching Identification - CEHD HWD

Model B1 - Stream Characteristics

MPU_CODE	EP_CODE	SOURCE	PROC_TYPE	WOOD_TYP	ENCLOSURE	SOURCE_TYP	VFLO_FAC	SFLO_FAC	VHAP_CON	SHAP_CON	HAL_STATUS
B1	3	Bleaching, ClO2 subst. (0%) tower vent	BLEACH	HARD		VENT	2.40E-2		1.49E+3		Y
B1	7	Bleaching, C-stage acid sewer	BLEACH	HARD		STREAM		1.04E+1		1.16E+1	Y
B1	19	Bleaching, H-stage (0.5-2%) tower vent	BLEACH	HARD		VENT	2.40E-2		3.67E+2		Y
B1	41	Bleaching, ClO2 subst. (0%) caustic sewer	BLEACH	HARD		STREAM		9.06E+0		1.52E+1	Y
B1	71	Bleaching, C-stage washer vent	BLEACH	HARD		VENT	3.62E-1		2.55E+2		Y
B1	73	Bleaching, C-stage seal tank vent	BLEACH	HARD		VENT	1.40E-2		3.29E+3		Y
B1	91	Bleaching, E1-stage (0%) tower vent	BLEACH	HARD		VENT	2.40E-2		1.41E+2		Y
B1	93	Bleaching, E1-stage (0%) washer vent	BLEACH	HARD		VENT	3.62E-1		2.43E+1		Y
B1	95	Bleaching, E1-stage (0%) seal tank vent	BLEACH	HARD		VENT	1.40E-2		2.54E+2		Y
B1	115	Bleaching, D1-stage (0%) tower vent	BLEACH	HARD		VENT	2.40E-2		1.89E+2		Y
B1	117	Bleaching, D1-stage (0%) washer vent	BLEACH	HARD		VENT	3.62E-1		2.07E+1		Y
B1	119	Bleaching, D1-stage (0%) seal tank vent	BLEACH	HARD		VENT	1.40E-2		1.61E+2		Y
B1	151	Bleaching, H-stage (0.5-2%) washer vent	BLEACH	HARD		VENT	3.62E-1		6.[illegible]		Y
B1	153	Bleaching, H-stage (0.5-2%) seal tank vent	BLEACH	HARD		VENT	1.40E-2		7.60E+2		Y

Model B1 - Emission Factor Summary

MPU_CODE	EP_CODE	SOURCE	ACET_EF	MEOH_EF	CTET_EF	MEK_EF	PCDB_EF	FORM_EF	HCL_EF	CL2_EF	MECL_EF	CHCL3_EF	L_BENZ_EF	PHENL_EF	MCHCL3EF	TCP245EF
B1	3	Bleaching, ClO2 subst. (0%) tower vent	1.43E-4	2.87E-2	3.00E-4	2.48E-4				2.10E-1	3.30E-4	1.13E-2				
B1	7	Bleaching, C-stage acid sewer	7.00E-2	5.00E-2		2.50E-2		1.20E-2			3.00E-3	5.29E-3				3.00E-4
B1	19	Bleaching, H-stage (0.5-2%) tower vent	1.32E-5	6.30E-3		2.58E-5		7.68E-5	1.05E-4	1.00E-2	5.02E-3	4.00E-2				
B1	41	Bleaching, ClO2 subst. (0%) caustic sewer	6.70E-2	1.00E-1		2.00E-2		9.00E-3			3.00E-3	1.42E-3				
B1	71	Bleaching, C-stage washer vent	1.95E-3	4.15E-1	3.00E-4	2.40E-3				2.10E-1	4.60E-4	1.13E-2				
B1	73	Bleaching, C-stage seal tank vent	1.40E-3	3.11E-1	2.66E-6	1.31E-3				5.32E-3	4.19E-5	7.26E-4				
B1	91	Bleaching, E1-stage (0%) tower vent	2.20E-3	4.85E-4		3.10E-3		3.84E-6	2.69E-5	3.00E-3	3.58E-3	7.93E-3			3.00E-4	
B1	93	Bleaching, E1-stage (0%) washer vent	3.00E-2	7.00E-3		3.00E-2		5.00E-5	4.00E-4	3.00E-3	5.00E-3	7.93E-3			3.00E-4	
B1	95	Bleaching, E1-stage (0%) seal tank vent	2.16E-2	5.25E-3		1.63E-2		3.46E-5	3.07E-4	7.61E-5	4.56E-4	5.10E-4			4.17E-6	
B1	115	Bleaching, D1-stage (0%) tower vent	7.32E-5	2.08E-4		3.10E-4		9.21E-4		1.0[illegible]	4.30E-3	1.58E-2				
B1	117	Bleaching, D1-stage (0%) washer vent	1.00E-3	3.00E-3		3.00E-3		1.20E-2		1.0[illegible]	6.00E-3	1.58E-2				
B1	119	Bleaching, D1-stage (0%) seal tank vent	7.18E-4	2.25E-3		1.63E-3		8.30E-3		2.5[illegible]E-4	5.47E-4	9.89E-4				
B1	151	Bleaching, H-stage (0.5-2%) washer vent	1.80E-4	9.10E-2		2.50E-4		1.00E-3	1.56E-3	1.00E-2	7.00E-3	4.00E-2				
B1	153	Bleaching, H-stage (0.5-2%) seal tank vent	1.29E-4	6.83E-2		1.36E-4		6.92E-4	1.20E-3	2.54E-4	6.38E-4	2.57E-3				

MPU_CODE	EP_CODE	SOURCE	PCP_EF	ACROLEINEF	PROPAL_EF	TOLUENE_EF	CMETHANEEF	TCDD_EF	TCDF_EF	ACETOPHNEF	CARBDI[illegible]F	HEXANE_EF	TOTHAPEF	TOTVOCEF	TRS_EF
B1	3	Bleaching, ClO2 subst. (0%) tower vent		6.89E-4									2.52E-1	4.14E-2	
B1	7	Bleaching, C-stage acid sewer	1.75E-3	2.00E-3	1.60E-2								1.20E-1	1.98E-1	
B1	19	Bleaching, H-stage (0.5-2%) tower vent		2.39E-5	8.12E-5	2.50E-4							6.19E-2	5.55E-2	
B1	41	Bleaching, ClO2 subst. (0%) caustic sewer		1.00E-3	1.20E-3	2.00E-6							1.37E-1	2.01E-1	
B1	71	Bleaching, C-stage washer vent		7.80E-3									6.47E-1	4.39E-1	
B1	73	Bleaching, C-stage seal tank vent		4.82E-3									3.23E-1	3.20E-1	
B1	91	Bleaching, E1-stage (0%) tower vent		1.77E-4	8.12E-5	5.00E-3							2.37E-2	2.17E-2	
B1	93	Bleaching, E1-stage (0%) washer vent		2.00E-3	1.00E-3	5.00E-3							6.17E-2	8.81E-2	
B1	95	Bleaching, E1-stage (0%) seal tank vent		1.24E-3	6.62E-4	1.60E-4							2.50E-2	4.64E-2	
B1	115	Bleaching, D1-stage (0%) tower vent		4.42E-5	1.62E-4								3.18E-2	1.76E-2	
B1	117	Bleaching, D1-stage (0%) washer vent		5.00E-4	2.00E-3								5.27E-2	3.77E-2	
B1	119	Bleaching, D1-stage (0%) seal tank vent		3.09E-4	1.32E-3								1.59E-2	1.58E-2	
B1	151	Bleaching, H-stage (0.5-2%) washer vent		2.70E-4	1.00E-3	2.50E-4							1.53E-1	1.54E-1	
B1	153	Bleaching, H-stage (0.5-2%) seal tank vent		1.67E-4	6.62E-4	8.01E-6							7.47E-2	7.57E-2	

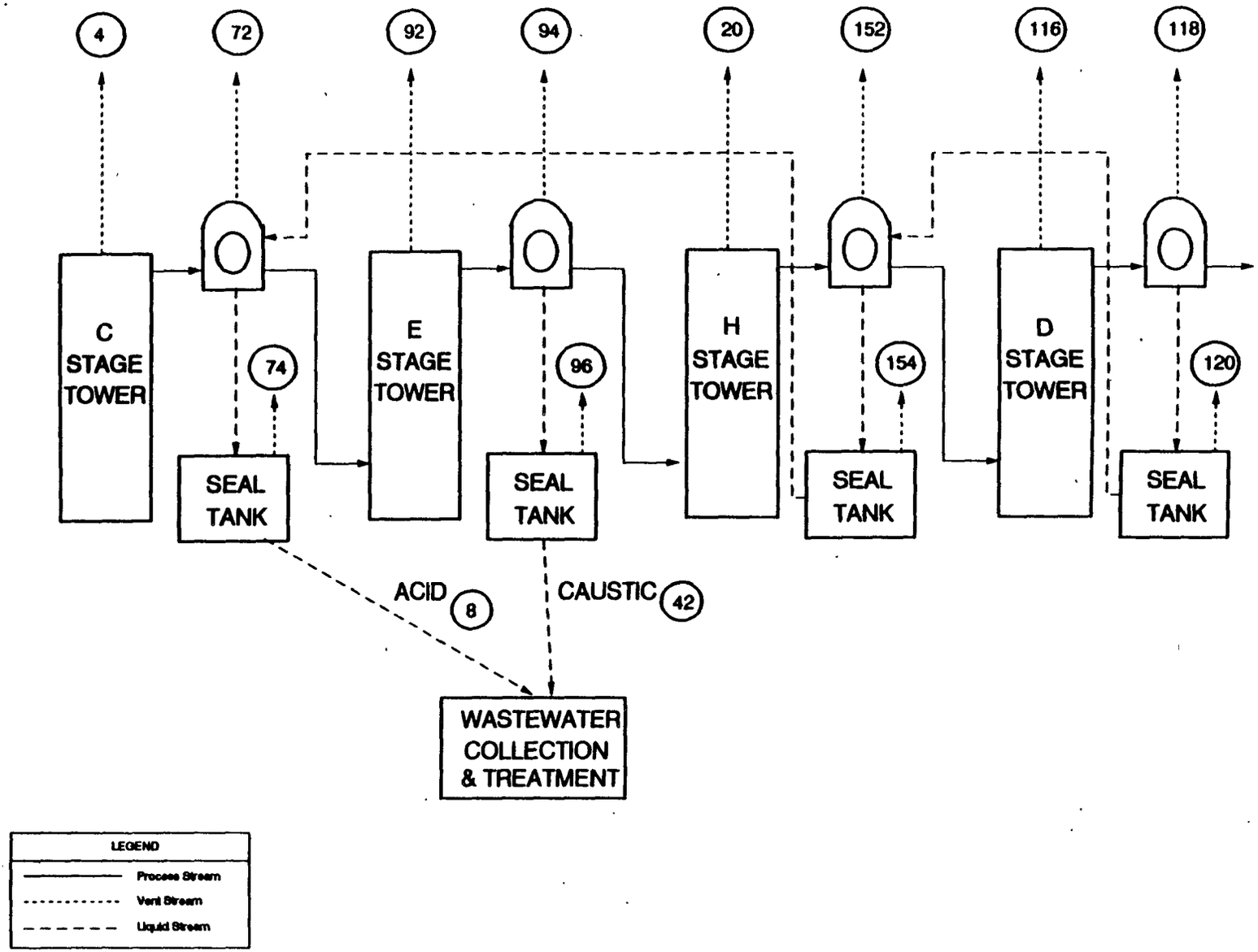

Figure B2. Bleaching Identification - CEHD SWD

Model B2 - Stream Characteristics

MPU_CODE	EP_CODE	SOURCE	PROC_TYPE	WOOD_TYP	ENCLOSURE	SOURCE_TYP	VFLO_FAC	SFLO_FAC	VHAP_CON	SHAP_CON	HAL_STATUS
B2	4	Bleaching, C-stage tower vent	BLEACH	SOFT		VENT	2.40E-2		1.33E+3		Y
B2	8	Bleaching, C-stage acid sewer	BLEACH	SOFT		STREAM		1.04E+1		1.16E+1	Y
B2	20	Bleaching, H-stage (0.5-2%) tower vent	BLEACH	SOFT		VENT	2.40E-2		5.19E+2		Y
B2	42	Bleaching, ClO2 subst. (0%) caustic sewer	BLEACH	SOFT		STREAM		9.06E+0		1.53E+1	Y
B2	72	Bleaching, C-stage washer vent	BLEACH	SOFT		VENT	3.62E-1		9.97E+1		Y
B2	74	Bleaching, C-stage seal tank vent	BLEACH	SOFT		VENT	1.40E-2		3.01E+2		Y
B2	92	Bleaching, E1-stage (0%) tower vent	BLEACH	SOFT		VENT	2.40E-2		1.56E+2		Y
B2	94	Bleaching, E1-stage (0%) washer vent	BLEACH	SOFT		VENT	3.62E-1		2.53E+1		Y
B2	96	Bleaching, E1-stage (0%) seal tank vent	BLEACH	SOFT		VENT	1.40E-2		2.56E+2		Y
B2	116	Bleaching, D1-stage (0%) tower vent	BLEACH	SOFT		VENT	2.40E-2		2.16E+2		Y
B2	118	Bleaching, D1-stage (0%) washer vent	BLEACH	SOFT		VENT	3.62E-1		2.26E+1		Y
B2	120	Bleaching, D1-stage (0%) seal tank vent	BLEACH	SOFT		VENT	1.40E-2		1.65E+2		Y
B2	152	Bleaching, H-stage (0.5-2%) washer vent	BLEACH	SOFT		VENT	3.62E-1		6.00E+1		Y
B2	154	Bleaching, H-stage (0.5-2%) seal tank vent	BLEACH	SOFT		VENT	1.40E-2		7.60E+2		Y

Model B2 - Emission Factor Summary

MPU_CODE	EP_CODE	SOURCE	ACET_EF	MEOH_EF	CTET_EF	MEK_EF	PCDB_EF	FORM_EF	HCL_EF	CL2_EF	MECL_EF	CHCL3_EF	L_BENZ_EF	PHENL_EF	MCHCL3EF	TCP245EF
B2	4	Bleaching, C-stage tower vent	3.66E-5	2.08E-3		1.03E-4		3.07E-5		2.10E-1	3.58E-4	1.00E-2			1.00E-4	
B2	8	Bleaching, C-stage acid sewer	7.00E-2	5.00E-2		2.50E-2		1.20E-2			3.00E-3	5.03E-3				3.00E-4
B2	20	Bleaching, H-stage (0.5-2%) tower vent	1.00E-3	4.90E-4		1.40E-3		3.00E-3		1.00E-2	2.00E-2	5.00E-2				
B2	42	Bleaching, ClO2 subst. (0%) caustic sewer	6.70E-2	1.00E-1		2.00E-2		9.00E-3			3.00E-3	2.30E-3				
B2	72	Bleaching, C-stage washer vent	5.00E-4	3.00E-2		1.00E-3		4.00E-4		2.10E-1	5.00E-4	1.00E-2			1.00E-4	
B2	74	Bleaching, C-stage seal tank vent	3.59E-4	2.25E-2		5.44E-4		2.77E-4		5.32E-3	4.56E-5	6.42E-4			1.39E-6	
B2	92	Bleaching, E1-stage (0%) tower vent	2.20E-3	4.85E-4		3.10E-3		3.84E-6	2.69E-5	3.00E-3	3.58E-3	1.06E-2			3.00E-4	
B2	94	Bleaching, E1-stage (0%) washer vent	3.00E-2	7.00E-3		3.00E-2		5.00E-5	4.00E-4	3.00E-3	5.00E-3	1.06E-2			3.00E-4	
B2	96	Bleaching, E1-stage (0%) seal tank vent	2.16E-2	5.25E-3		1.63E-2		3.46E-5	3.07E-4	7.61E-5	4.56E-4	6.78E-4			4.17E-6	
B2	116	Bleaching, D1-stage (0%) tower vent	7.32E-5	2.08E-4		3.10E-4		9.21E-4		1.00E-2	4.30E-3	2.05E-2				
B2	118	Bleaching, D1-stage (0%) washer vent	1.00E-3	3.00E-3		3.00E-3		1.20E-2		1.00E-2	6.00E-3	2.05E-2				
B2	120	Bleaching, D1-stage (0%) seal tank vent	7.18E-4	2.25E-3		1.63E-3		8.30E-3		2.54E-4	5.47E-4	1.32E-3				
B2	152	Bleaching, H-stage (0.5-2%) washer vent	1.80E-4	9.10E-2		2.50E-4		1.00E-3	1.56E-3	1.00E-2	7.00E-3	4.00E-2				
B2	154	Bleaching, H-stage (0.5-2%) seal tank vent	1.29E-4	6.83E-2		1.36E-4		6.92E-4	1.20E-3	2.54E-4	6.38E-4	2.57E-3				

MPU_CODE	EP_CODE	SOURCE	PCP_EF	ACROLEINEF	PROPAL_EF	TOLUENE_EF	CHETHANEEF	TCDD_EF	TCDF_EF	ACETOPHNEF	CARBDIS_EF	HEXANE_EF	TOTHAPEF	TOTVOCEF	TRS_EF
B2	4	Bleaching, C-stage tower vent		1.77E-6	8.12E-6	6.00E-4	5.00E-4						2.24E-1	1.34E-2	
B2	8	Bleaching, C-stage acid sewer	1.70E-3	2.00E-3	1.60E-2								1.19E-1	1.98E-1	
B2	20	Bleaching, H-stage (0.5-2%) tower vent		2.00E-5	3.80E-4	2.10E-3							8.75E-2	1.19E-1	
B2	42	Bleaching, ClO2 subst. (0%) caustic sewer		1.00E-3	1.20E-3	2.00E-6							1.38E-1	2.02E-1	
B2	72	Bleaching, C-stage washer vent		2.00E-5	1.00E-4	6.00E-4	5.00E-4						2.53E-1	4.35E-2	
B2	74	Bleaching, C-stage seal tank vent		1.24E-5	6.62E-5	1.92E-5	2.27E-5						2.96E-2	2.46E-2	
B2	92	Bleaching, E1-stage (0%) tower vent		1.77E-4	8.12E-5	5.00E-3							2.63E-2	2.43E-2	
B2	94	Bleaching, E1-stage (0%) washer vent		2.00E-3	1.00E-3	5.00E-3							6.43E-2	9.08E-2	
B2	96	Bleaching, E1-stage (0%) seal tank vent		1.24E-3	6.62E-4	1.60E-4							2.52E-2	4.66E-2	
B2	116	Bleaching, D1-stage (0%) tower vent		4.42E-5	1.62E-4								3.65E-2	2.22E-2	
B2	118	Bleaching, D1-stage (0%) washer vent		5.00E-4	2.00E-3								5.74E-2	4.24E-2	
B2	120	Bleaching, D1-stage (0%) seal tank vent		3.09E-4	1.32E-3								1.62E-2	1.61E-2	
B2	152	Bleaching, H-stage (0.5-2%) washer vent		2.70E-4	1.00E-3	2.50E-4							1.53E-1	1.54E-1	
B2	154	Bleaching, H-stage (0.5-2%) seal tank vent		1.67E-4	6.62E-4	8.01E-6							7.47E-2	7.57E-2	

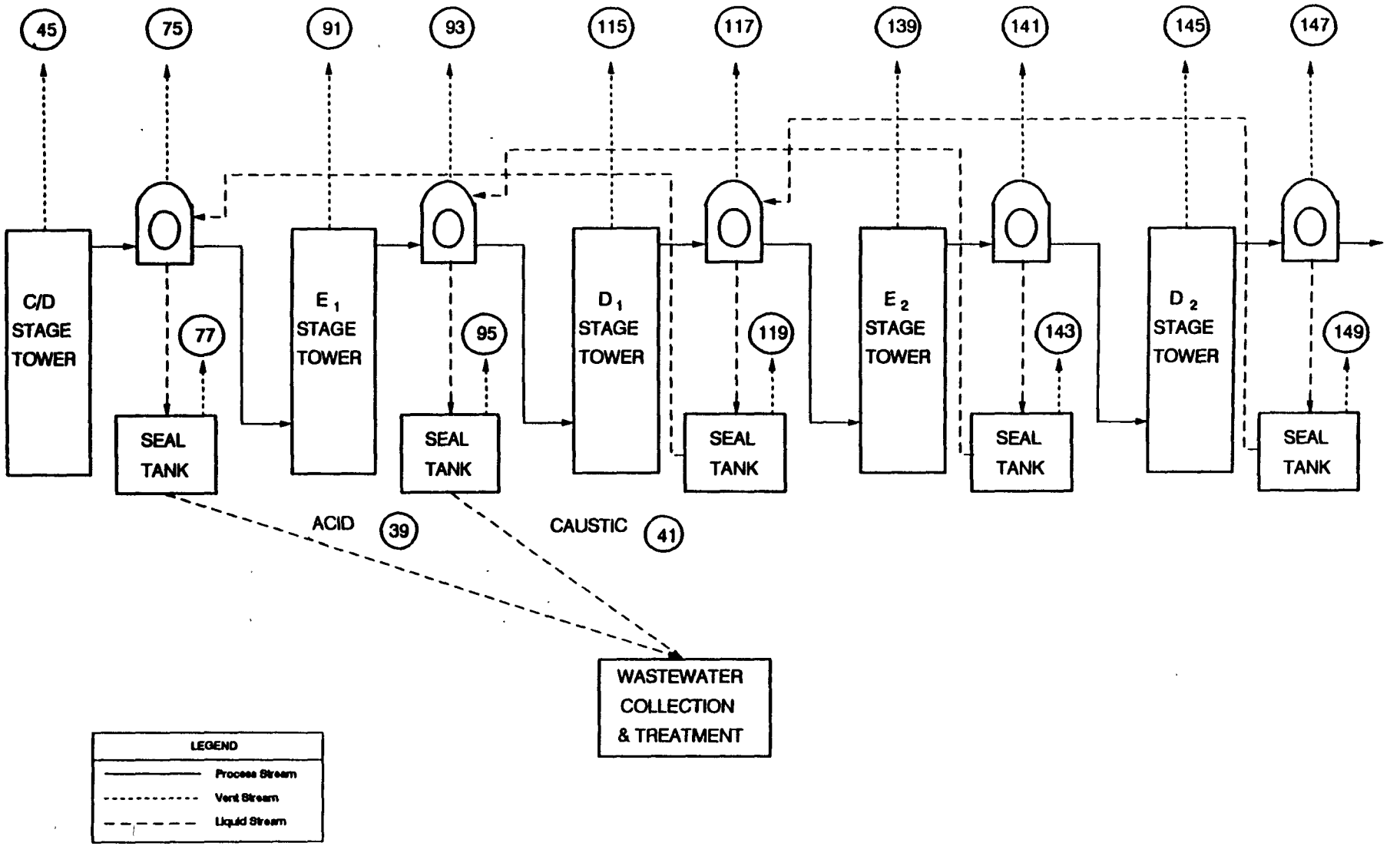

Figure B3. Bleaching Identification - CdEDED (0%) HWD

Model B3 - Stream Characteristics

MPU_CODE	EP_CODE	SOURCE	PROC_TYPE	WOOD_TYP	ENCLOSURE	SOURCE_TYP	VFLO_FAC	SFLO_FAC	VHAP_CON	SHAP_CON	HAL_STATUS
B3	39	Bleaching, C-stage acid sewer	BLEACH	HARD		STREAM		1.04E+1		1.16E+1	Y
B3	41	Bleaching, ClO2 subst. (0%) caustic sewer	BLEACH	HARD		STREAM		9.06E+0		1.52E+1	Y
B3	45	Bleaching, C-stage tower vent	BLEACH	HARD		VENT	2.40E-2		1.46E+3		Y
B3	75	Bleaching, C-stage washer vent	BLEACH	HARD		VENT	3.62E-1		2.52E+2		Y
B3	77	Bleaching, C-stage seal tank vent	BLEACH	HARD		VENT	1.40E-2		3.28E+3		Y
B3	91	Bleaching, E1-stage (0%) tower vent	BLEACH	HARD		VENT	2.40E-2		1.41E+2		Y
B3	93	Bleaching, E1-stage (0%) washer vent	BLEACH	HARD		VENT	3.62E-1		2.43E+1		Y
B3	95	Bleaching, E1-stage (0%) seal tank vent	BLEACH	HARD		VENT	1.40E-2		2.54E+2		Y
B3	115	Bleaching, D1-stage (0%) tower vent	BLEACH	HARD		VENT	2.40E-2		1.89E+2		Y
B3	117	Bleaching, D1-stage (0%) washer vent	BLEACH	HARD		VENT	3.62E-1		2.07E+1		Y
B3	119	Bleaching, D1-stage (0%) seal tank vent	BLEACH	HARD		VENT	1.40E-2		1.61E+2		Y
B3	139	Bleaching, E2-stage tower vent	BLEACH	HARD		VENT	2.40E-2		6.14E+1		Y
B3	141	Bleaching, E2-stage washer vent	BLEACH	HARD		VENT	3.62E-1		1.15E+1		Y
B3	143	Bleaching, E2-stage seal tank vent	BLEACH	HARD		VENT	1.40E-2		1.27E+2		Y
B3	145	Bleaching, D2-stage tower vent	BLEACH	HARD		VENT	2.40E-2		6.60E+1		Y
B3	147	Bleaching, D2-stage washer vent	BLEACH	HARD		VENT	3.62E-1		4.57E+0		Y
B3	149	Bleaching, D2-stage seal tank vent	BLEACH	HARD		VENT	1.40E-2		4.59E+0		Y

Model B3 - Emission Factor Summary

MPU_CODE	EP_CODE	SOURCE	ACET_EF	MEOH_EF	CTET_EF	MEK_EF	PCDD_EF	FORM_EF	HCL_EF	CL2_EF	MECL_EF	CHCL3_EF	L_BENZ_EF	PHENL_EF	MCHCL3EF	TCP245EF
B3	39	Bleaching, C-stage acid sewer	7.00E-2	5.00E-2		2.50E-2		1.20E-2			3.00E-3	5.29E-3				3.70E-4
B3	41	Bleaching, ClO2 subst. (0%) caustic sewer	6.70E-2	1.00E-1		2.00E-2		9.00E-3			3.00E-3	1.42E-3				
B3	45	Bleaching, C-stage tower vent	1.43E-4	2.87E-2	3.00E-4	2.48E-4				2.10E-1	3.30E-4	5.27E-3				
B3	75	Bleaching, C-stage washer vent	1.95E-3	4.15E-1	3.00E-4	2.40E-3				2.10E-1	4.60E-4	5.27E-3				
B3	77	Bleaching, C-stage seal tank vent	3.59E-4	3.11E-1		5.44E-4		2.77E-4		5.32E-3	4.13E-5	3.99E-4			1.39E-6	
B3	91	Bleaching, E1-stage (0%) tower vent	2.20E-3	4.85E-4		3.10E-3		3.84E-6	2.69E-5	3.00E-3	3.58E-3	7.93E-3			3.00E-4	
B3	93	Bleaching, E1-stage (0%) washer vent	3.00E-2	7.00E-3		3.00E-2		5.00E-5	4.00E-4	3.00E-3	5.00E-3	7.93E-3			3.00E-4	
B3	95	Bleaching, E1-stage (0%) seal tank vent	2.16E-2	5.25E-3		1.63E-2		3.46E-5	3.07E-4	7.61E-5	4.56E-4	5.10E-4			4.17E-6	
B3	115	Bleaching, D1-stage (0%) tower vent	7.32E-5	2.08E-4		3.10E-4		9.21E-4		1.00E-2	4.30E-3	1.58E-2				
B3	117	Bleaching, D1-stage (0%) washer vent	1.00E-3	3.00E-3		3.00E-3		1.20E-2		1.00E-2	6.00E-3	1.58E-2				
B3	119	Bleaching, D1-stage (0%) seal tank vent	7.18E-4	2.25E-3		1.63E-3		8.30E-3		2.54E-4	5.47E-4	9.89E-4				
B3	139	Bleaching, E2-stage tower vent	1.10E-3	2.42E-4		1.55E-3		1.92E-6	1.34E-5		1.79E-3	3.97E-3			1.50E-4	
B3	141	Bleaching, E2-stage washer vent	1.50E-2	3.50E-3		1.50E-2		2.50E-5	2.00E-4		2.50E-3	3.97E-3			1.50E-4	
B3	143	Bleaching, E2-stage seal tank vent	1.08E-2	2.63E-3		8.16E-3		1.73E-5	1.54E-4		2.28E-4	2.55E-4			2.09E-6	
B3	145	Bleaching, D2-stage tower vent	2.90E-7	6.90E-7		2.10E-7		4.61E-6		1.00E-2	1.08E-3	4.62E-5				
B3	147	Bleaching, D2-stage washer vent	4.00E-6	1.00E-5		2.00E-6		6.00E-5		1.00E-2	1.50E-3	4.62E-5				
B3	149	Bleaching, D2-stage seal tank vent	2.87E-6	7.50E-6		1.09E-6		4.15E-5		2.54E-4	1.37E-4	2.96E-6				

MPU_CODE	EP_CODE	SOURCE	PCP_EF	ACROLEINEF	PROPAL_EF	TOLUENE_EF	CMETHANEEF	TCDD_EF	TCDF_EF	ACETOPHNEF	CARBDIS_EF	HEXANE_EF	TOTHAPEF	TOTVOCEF	TRS_EF
B3	39	Bleaching, C-stage acid sewer	1.75E-3	2.00E-3	1.60E-2								1.20E-1	1.90E-1	
B3	41	Bleaching, ClO2 subst. (0%) caustic sewer		1.00E-3	1.20E-3	2.00E-6							1.37E-1	2.01E-1	
B3	45	Bleaching, C-stage tower vent		6.89E-4									2.46E-1	3.54E-2	
B3	75	Bleaching, C-stage washer vent		7.80E-3									6.41E-1	4.33E-1	
B3	77	Bleaching, C-stage seal tank vent		4.82E-3	6.62E-5	1.92E-5	2.27E-5						3.23E-1	3.18E-1	
B3	91	Bleaching, E1-stage (0%) tower vent		1.77E-4	8.12E-5	5.00E-3							2.37E-2	2.17E-2	
B3	93	Bleaching, E1-stage (0%) washer vent		2.00E-3	1.00E-3	5.00E-3							6.17E-2	8.81E-2	
B3	95	Bleaching, E1-stage (0%) seal tank vent		1.24E-3	6.62E-4	1.60E-4							2.50E-2	4.64E-2	
B3	115	Bleaching, D1-stage (0%) tower vent		4.42E-5	1.62E-4								3.18E-2	1.76E-2	
B3	117	Bleaching, D1-stage (0%) washer vent		5.00E-4	2.00E-3								5.27E-2	3.77E-2	
B3	119	Bleaching, D1-stage (0%) seal tank vent		3.09E-4	1.32E-3								1.59E-2	1.58E-2	
B3	139	Bleaching, E2-stage tower vent		8.83E-5	4.06E-5	2.50E-3							1.03E-2	1.08E-2	
B3	141	Bleaching, E2-stage washer vent		1.00E-3	5.00E-4	2.50E-3							2.93E-2	4.41E-2	
B3	143	Bleaching, E2-stage seal tank vent		6.18E-4	3.31E-4	8.01E-5							1.25E-2	2.32E-2	
B3	145	Bleaching, D2-stage tower vent		1.80E-7	4.90E-7								1.11E-2	5.31E-5	
B3	147	Bleaching, D2-stage washer vent		2.00E-6	6.00E-6								1.16E-2	1.35E-4	
B3	149	Bleaching, D2-stage seal tank vent		1.24E-6	3.97E-6								4.52E-4	6.43E-5	

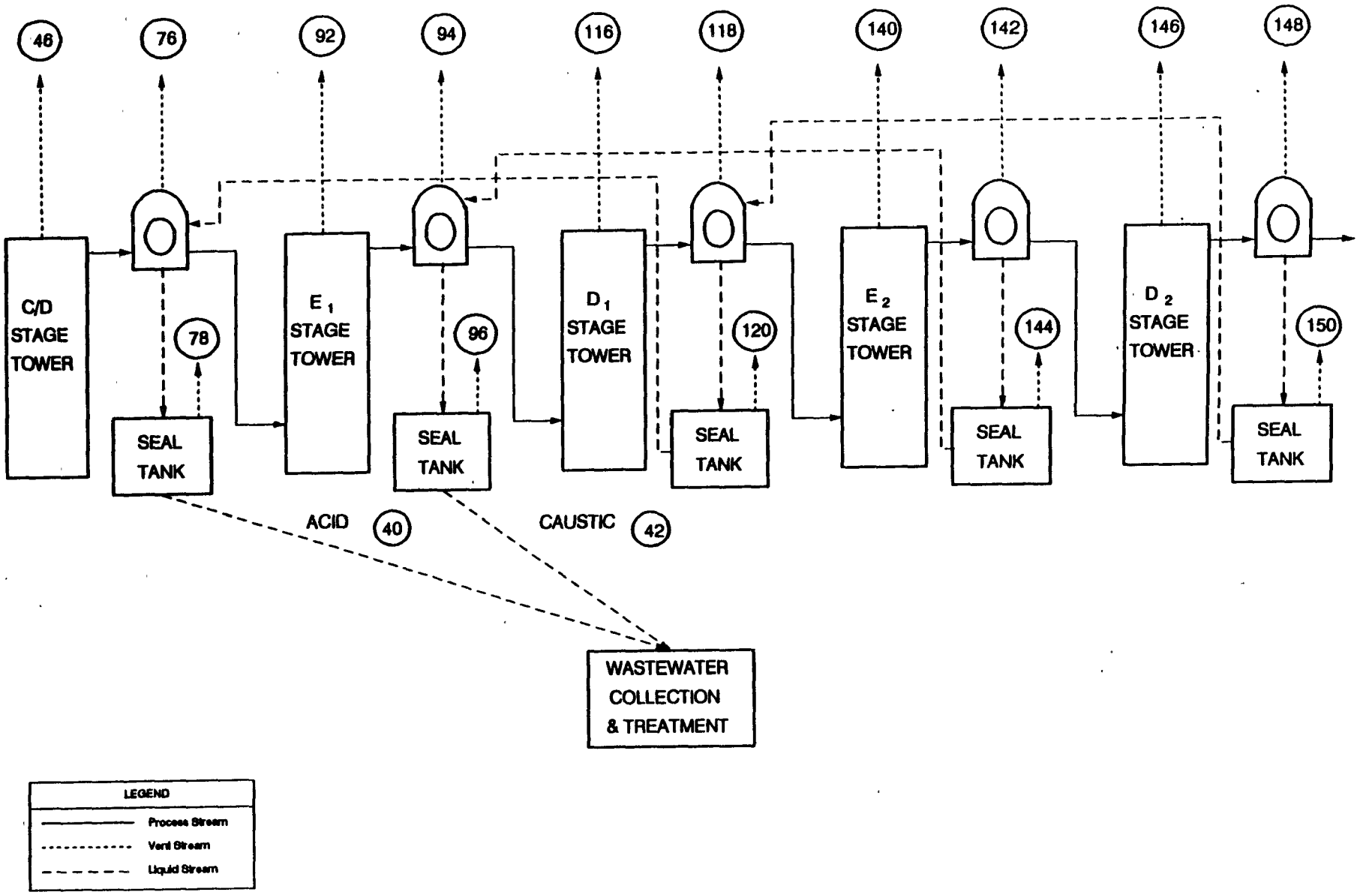

Figure B4. Bleaching Identification - CdEDED (0%) SWD

Model B4 - Stream Characteristics

MPU_CODE	EP_CODE	SOURCE	PROC_TYPE	WOOD_TYP	ENCLOSURE	SOURCE_TYP	VFLO_FAC	SFLO_FAC	VHAP_CON	SHAP_CON	HAL_STATUS
B4	40	Bleaching, C-stage acid sewer	BLEACH	SOFT		STREAM		1.04E+1		1.16E+1	Y
B4	42	Bleaching, ClO2 subst. (0%) caustic sewer	BLEACH	SOFT		STREAM		9.06E+0		1.53E+1	Y
B4	46	Bleaching, C-stage tower vent	BLEACH	SOFT		VENT	2.40E-2		1.31E+3		Y
B4	76	Bleaching, C-stage washer vent	BLEACH	SOFT		VENT	3.62E-1		9.82E+1		Y
B4	78	Bleaching, C-stage seal tank vent	BLEACH	SOFT		VENT	1.40E-2		3.00E+2		Y
B4	92	Bleaching, E1-stage (0%) tower vent	BLEACH	SOFT		VENT	2.40E-2		1.56E+2		Y
B4	94	Bleaching, E1-stage (0%) washer vent	BLEACH	SOFT		VENT	3.62E-1		2.53E+1		Y
B4	96	Bleaching, E1-stage (0%) seal tank vent	BLEACH	SOFT		VENT	1.40E-2		2.56E+2		Y
B4	116	Bleaching, D1-stage (0%) tower vent	BLEACH	SOFT		VENT	2.40E-2		2.16E+2		Y
B4	118	Bleaching, D1-stage (0%) washer vent	BLEACH	SOFT		VENT	3.62E-1		2.26E+1		Y
B4	120	Bleaching, D1-stage (0%) seal tank vent	BLEACH	SOFT		VENT	1.40E-2		1.65E+2		Y
B4	140	Bleaching, E2-stage tower vent	BLEACH	SOFT		VENT	2.40E-2		6.91E+1		Y
B4	142	Bleaching, E2-stage washer vent	BLEACH	SOFT		VENT	3.62E-1		1.21E+1		Y
B4	144	Bleaching, E2-stage seal tank vent	BLEACH	SOFT		VENT	1.40E-2		1.28E+2		Y
B4	146	Bleaching, D2-stage tower vent	BLEACH	SOFT		VENT	2.40E-2		6.59E+1		Y
B4	148	Bleaching, D2-stage washer vent	BLEACH	SOFT		VENT	3.62E-1		4.57E+0		Y
B4	150	Bleaching, D2-stage seal tank vent	BLEACH	SOFT		VENT	1.40E-2		4.59E+0		Y

Model B4 - Emission Factor Summary

MPU_CODE	EP_CODE	SOURCE	ACET_EF	MEOH_EF	CTET_EF	MEK_EF	PCDB_EF	FORM_EF	HCL_EF	CL2_EF	MECL_EF	CHCL3_EF	L_BENZ_EF	PHENL_EF	MCHCL3EF	TCP245EF
B4	40	Bleaching, C-stage acid sewer	7.00E-2	5.00E-2		2.50E-2		1.20E-2			3.00E-3	5.03E-3				3.70E-4
B4	42	Bleaching, ClO2 subst. (0%) caustic sewer	6.70E-2	1.00E-1		2.00E-2		9.00E-3			3.00E-3	2.30E-3				
B4	46	Bleaching, C-stage tower vent	3.66E-5	2.08E-3		1.03E-4		3.07E-5		2.10E-1	3.58E-4	6.21E-3			1.00E-4	
B4	76	Bleaching, C-stage washer vent	5.00E-4	3.00E-2		1.00E-3		4.00E-4		2.10E-1	5.00E-4	6.21E-3			1.00E-4	
B4	78	Bleaching, C-stage seal tank vent	1.40E-3	2.25E-2	2.66E-6	1.31E-3				5.32E-3	4.56E-5	3.39E-4				
B4	92	Bleaching, E1-stage (0%) tower vent	2.20E-3	4.85E-4		3.10E-3		3.84E-6	2.69E-5	3.00E-3	3.58E-3	1.06E-2			3.00E-4	
B4	94	Bleaching, E1-stage (0%) washer vent	3.00E-2	7.00E-3		3.00E-2		5.00E-5	4.00E-4	3.00E-3	5.00E-3	1.06E-2			3.00E-4	
B4	96	Bleaching, E1-stage (0%) seal tank vent	2.16E-2	5.25E-3		1.63E-2		3.46E-5	3.07E-4	7.61E-5	4.56E-4	6.78E-4			4.17E-6	
B4	116	Bleaching, D1-stage (0%) tower vent	7.32E-5	2.08E-4		3.10E-4		9.21E-4		1.00E-2	4.30E-3	2.05E-2				
B4	118	Bleaching, D1-stage (0%) washer vent	1.00E-3	3.00E-3		3.00E-3		1.20E-2		1.00E-2	6.00E-3	2.05E-2				
B4	120	Bleaching, D1-stage (0%) seal tank vent	7.18E-4	2.25E-3		1.63E-3		8.30E-3		2.54E-4	5.47E-4	1.32E-3				
B4	140	Bleaching, E2-stage tower vent	1.10E-3	2.42E-4		1.55E-3		1.92E-6	1.34E-5		1.79E-3	5.28E-3			1.50E-4	
B4	142	Bleaching, E2-stage washer vent	1.50E-2	3.50E-3		1.50E-2		2.50E-5	2.00E-4		2.50E-3	5.28E-3			1.50E-4	
B4	144	Bleaching, E2-stage seal tank vent	1.08E-2	2.63E-3		8.16E-3		1.73E-5	1.54E-4		2.28E-4	3.39E-4			2.09E-6	
B4	146	Bleaching, D2-stage tower vent	2.90E-7	6.90E-7		2.10E-7		4.61E-6		1.00E-2	1.08E-3	3.38E-5				
B4	148	Bleaching, D2-stage washer vent	4.00E-6	1.00E-5		2.00E-6		6.00E-5		1.00E-2	1.50E-3	3.38E-5				
B4	150	Bleaching, D2-stage seal tank vent	2.87E-6	7.50E-6		1.09E-6		4.15E-5		2.54E-4	1.37E-4	2.96E-6				

MPU_CODE	EP_CODE	SOURCE	PCP_EF	ACROLEINEF	PROPAL_EF	TOLUENE_EF	CMETHANEEF	TCDD_EF	TCDF_EF	ACETOPHNEF	CARBDIS_EF	HEXANE_EF	TOTHAPEF	TOTVOCEF	TRS_EF
B4	40	Bleaching, C-stage acid sewer	1.75E-3	2.00E-3	1.60E-2								1.19E-1	1.98E-1	
B4	42	Bleaching, ClO2 subst. (0%) caustic sewer		1.00E-3	1.20E-3	2.00E-6							1.38E-1	2.02E-1	
B4	46	Bleaching, C-stage tower vent		1.77E-6	8.12E-6	6.00E-4	5.00E-4						2.20E-1	9.62E-3	
B4	76	Bleaching, C-stage washer vent		2.00E-5	1.00E-4	6.00E-4	5.00E-4						2.50E-1	3.97E-2	
B4	78	Bleaching, C-stage seal tank vent		1.24E-5									2.95E-2	2.56E-2	
B4	92	Bleaching, E1-stage (0%) tower vent		1.77E-4	8.12E-5	5.00E-3							2.63E-2	2.43E-2	
B4	94	Bleaching, E1-stage (0%) washer vent		2.00E-3	1.00E-3	5.00E-3							6.43E-2	9.08E-2	
B4	96	Bleaching, E1-stage (0%) seal tank vent		1.24E-3	6.62E-4	1.60E-4							2.52E-2	4.66E-2	
B4	116	Bleaching, D1-stage (0%) tower vent		4.42E-5	1.62E-4								3.65E-2	2.22E-2	
B4	118	Bleaching, D1-stage (0%) washer vent		5.00E-4	2.00E-3								5.74E-2	4.24E-2	
B4	120	Bleaching, D1-stage (0%) seal tank vent		3.09E-4	1.32E-3								1.62E-2	1.61E-2	
B4	140	Bleaching, E2-stage tower vent		8.83E-5	4.06E-5	2.50E-3							1.17E-2	1.21E-2	
B4	142	Bleaching, E2-stage washer vent		1.00E-3	5.00E-4	2.50E-3							3.07E-2	4.54E-2	
B4	144	Bleaching, E2-stage seal tank vent		6.18E-4	3.31E-4	8.01E-5							1.26E-2	2.33E-2	
B4	146	Bleaching, D2-stage tower vent		1.80E-7	4.90E-7								1.11E-2	4.07E-5	
B4	148	Bleaching, D2-stage washer vent		2.00E-6	6.00E-6								1.16E-2	1.23E-4	
B4	150	Bleaching, D2-stage seal tank vent		1.24E-6	3.97E-6								4.52E-4	6.43E-5	

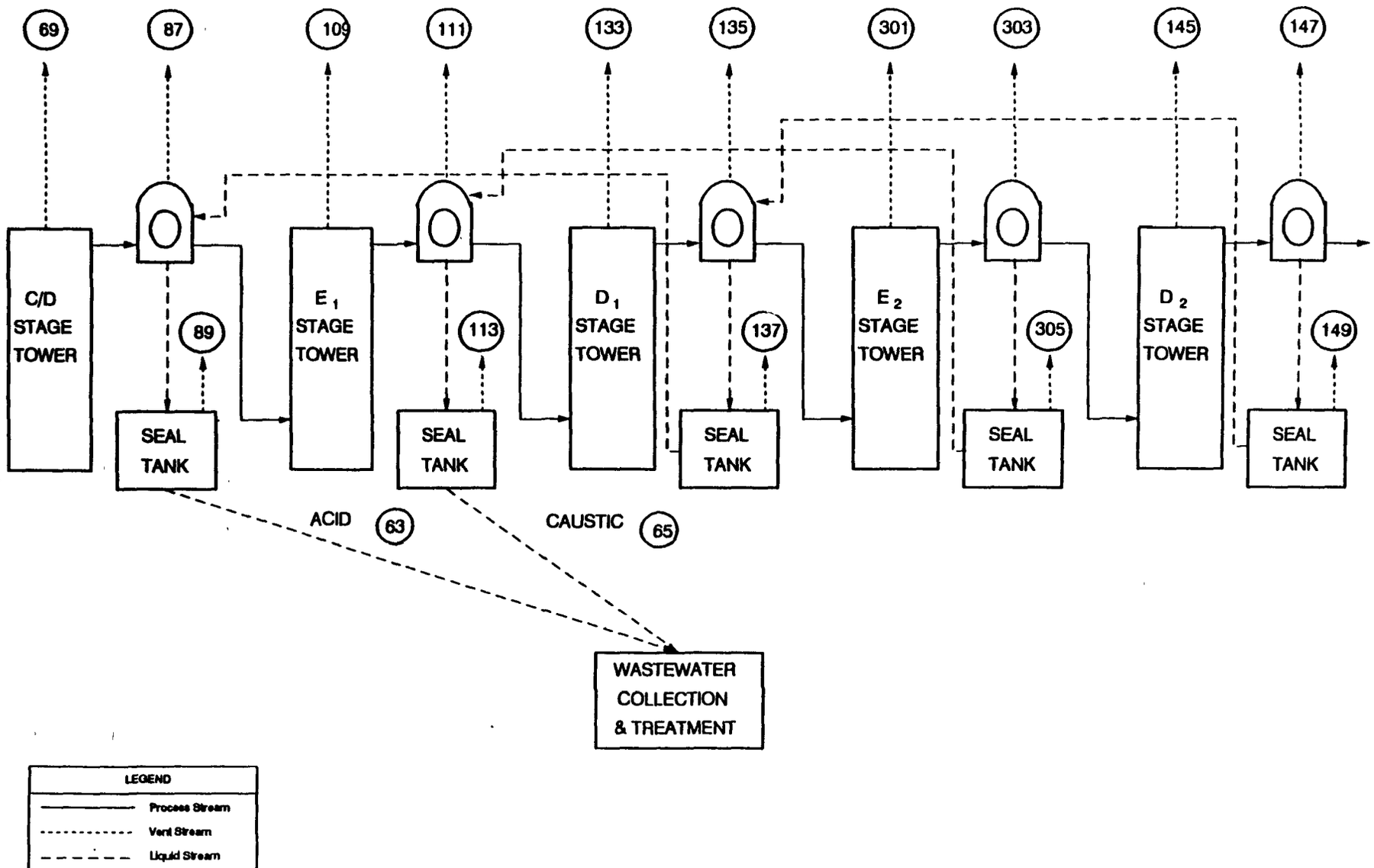

Figure B5. Bleaching Identification - CdEDED (LOW) HWD

Model B5 - Stream Characteristics

MPU_CODE	EP_CODE	SOURCE	PROC_TYPE	WOOD_TYP	ENCLOSURE	SOURCE_TYP	VFLO_FAC	SFLO_FAC	VHAP_CON	SHAP_CON	HAL_STATUS
B5	63	Bleaching, C-stage acid sewer	BLEACH	HARD		STREAM		1.04E+1		4.72E+1	Y
B5	65	Bleaching, ClO2 subst. (low) caustic sewer	BLEACH	HARD		STREAM		9.06E+0		1.43E+1	Y
B5	69	Bleaching, C-stage tower vent	BLEACH	HARD		VENT	2.40E-2		1.46E+3		Y
B5	87	Bleaching, C-stage washer vent	BLEACH	HARD		VENT	3.62E-1		2.52E+2		Y
B5	89	Bleaching, C-stage seal tank vent	BLEACH	HARD		VENT	1.40E-2		3.29E+3		Y
B5	109	Bleaching, E1-stage (low) tower vent	BLEACH	HARD		VENT	2.40E-2		1.41E+2		Y
B5	111	Bleaching, E1-stage (low) washer vent	BLEACH	HARD		VENT	3.62E-1		2.43E+1		Y
B5	113	Bleaching, E1-stage (low) seal tank vent	BLEACH	HARD		VENT	1.40E-2		2.54E+2		Y
B5	133	Bleaching, D1-stage (low) tower vent	BLEACH	HARD		VENT	2.40E-2		1.89E+2		Y
B5	135	Bleaching, D1-stage (low) washer vent	BLEACH	HARD		VENT	3.62E-1		2.07E+1		Y
B5	137	Bleaching, D1-stage (low) seal tank vent	BLEACH	HARD		VENT	1.40E-2		1.62E+2		Y
B5	145	Bleaching, D2-stage tower vent	BLEACH	HARD		VENT	2.40E-2		6.60E+1		Y
B5	147	Bleaching, D2-stage washer vent	BLEACH	HARD		VENT	3.62E-1		4.57E+0		Y
B5	149	Bleaching, D2-stage seal tank vent	BLEACH	HARD		VENT	1.40E-2		4.59E+0		Y
B5	301	Bleaching, E2-stage tower vent	BLEACH	HARD		VENT	2.40E-2		6.14E+1		Y
B5	303	Bleaching, E2-stage washer vent	BLEACH	HARD		VENT	3.62E-1		1.15E+1		Y
B5	305	Bleaching, E2-stage seal tank vent	BLEACH	HARD		VENT	1.40E-2		1.27E+2		Y

Model B5 - Emission Factor Summary

MPU_CODE	EP_CODE	SOURCE	ACET_EF	MEOH_EF	CTET_EF	MEK_EF	PCDB_EF	FORM_EF	HCL_EF	CL2_EF	MECL_EF	CHCL3_EF	L_BENZ_EF	PHENL_EF	MCHCL3EF	TCP245EF
B5	63	Bleaching, C-stage acid sewer	2.20E-3	4.60E-1		7.00E-3		8.10E-3			3.00E-3	4.10E-3				3.70E-4
B5	65	Bleaching, ClO2 subst. (low) caustic sewer	2.00E-3	1.00E-1		1.00E-2		1.50E-2			3.00E-5	1.10E-3				
B5	69	Bleaching, C-stage tower vent	1.43E-4	2.87E-2	3.00E-4	2.48E-4				2.10E-1	3.30E-4	5.27E-3				
B5	87	Bleaching, C-stage washer vent	1.95E-3	4.15E-1	3.00E-4	2.40E-3				2.10E-1	4.60E-4	5.27E-3				
B5	89	Bleaching, C-stage seal tank vent	1.40E-3	3.11E-1	2.66E-6	1.31E-3				5.32E-3	4.19E-5	3.47E-4				
B5	109	Bleaching, E1-stage (low) tower vent	2.20E-3	4.85E-4		3.10E-3		3.84E-6	2.69E-5	3.00E-3	3.58E-3	7.93E-3			3.00E-4	
B5	111	Bleaching, E1-stage (low) washer vent	3.00E-2	7.00E-3		3.00E-2		5.00E-5	4.00E-4	3.00E-3	5.00E-3	7.93E-3			3.00E-4	
B5	113	Bleaching, E1-stage (low) seal tank vent	2.16E-2	5.25E-3		1.63E-2		3.46E-5	3.07E-4	7.61E-5	4.56E-4	5.10E-4			4.17E-6	
B5	133	Bleaching, D1-stage (low) tower vent	7.32E-5	2.08E-4		3.10E-4		9.21E-4		1.00E-2	4.30E-3	1.58E-2				
B5	135	Bleaching, D1-stage (low) washer vent	1.00E-3	3.00E-3		3.00E-3		1.20E-2		1.00E-2	6.00E-3	1.58E-2				
B5	137	Bleaching, D1-stage (low) seal tank vent	7.18E-4	2.25E-3		1.63E-3		8.30E-3		2.54E-4	5.47E-4	1.01E-3				
B5	145	Bleaching, D2-stage tower vent	2.90E-7	6.90E-7		2.10E-7		4.61E-6		1.00E-2	1.08E-3	4.62E-5				
B5	147	Bleaching, D2-stage washer vent	4.00E-6	1.00E-5		2.00E-6		6.00E-5		1.00E-2	1.50E-3	4.62E-5				
B5	149	Bleaching, D2-stage seal tank vent	2.87E-6	7.50E-6		1.09E-6		4.15E-5		2.54E-4	1.37E-4	2.96E-6				
B5	301	Bleaching, E2-stage tower vent	1.10E-3	2.42E-4		1.55E-3		1.92E-6	1.34E-5		1.79E-3	3.97E-3			1.50E-4	
B5	303	Bleaching, E2-stage washer vent	1.50E-2	3.50E-3		1.50E-2		2.50E-5	2.00E-4		2.50E-3	3.97E-3			1.50E-4	
B5	305	Bleaching, E2-stage seal tank vent	1.08E-2	2.63E-3		8.16E-3		1.73E-5	1.54E-4		2.28E-4	2.55E-4			2.09E-6	

MPU_CODE	EP_CODE	SOURCE	PCP_EF	ACROLEINEF	PROPAL_EF	TOLUENE_EF	CMETHANEEF	TCDD_EF	TCDF_EF	ACETOPHNEF	CARBDIS_EF	HEXANE_EF	TOTHAPEF	TOTVOCEF	TRS_EF
B5	63	Bleaching, C-stage acid sewer	1.75E-3	2.50E-3	5.00E-4								4.87E-1	4.98E-1	
B5	65	Bleaching, ClO2 subst. (low) caustic sewer		1.40E-4	8.00E-5								1.29E-1	1.31E-1	
B5	69	Bleaching, C-stage tower vent		6.89E-4									2.46E-1	3.54E-2	
B5	87	Bleaching, C-stage washer vent		7.80E-3									6.41E-1	4.33E-1	
B5	89	Bleaching, C-stage seal tank vent		4.82E-3									3.23E-1	3.19E-1	
B5	109	Bleaching, E1-stage (low) tower vent		1.77E-4	8.12E-5	5.00E-3							2.37E-2	2.17E-2	
B5	111	Bleaching, E1-stage (low) washer vent		2.00E-3	1.00E-3	5.00E-3							6.17E-2	8.81E-2	
B5	113	Bleaching, E1-stage (low) seal tank vent		1.24E-3	6.62E-4	1.60E-4							2.50E-2	4.64E-2	
B5	133	Bleaching, D1-stage (low) tower vent		4.42E-5	1.62E-4								3.18E-2	1.76E-2	
B5	135	Bleaching, D1-stage (low) washer vent		5.00E-4	2.00E-3								5.27E-2	3.77E-2	
B5	137	Bleaching, D1-stage (low) seal tank vent		3.09E-4	1.32E-3								1.59E-2	1.58E-2	
B5	145	Bleaching, D2-stage tower vent		1.80E-7	4.90E-7								1.11E-2	5.31E-5	
B5	147	Bleaching, D2-stage washer vent		2.00E-6	6.00E-6								1.16E-2	1.35E-4	
B5	149	Bleaching, D2-stage seal tank vent		1.24E-6	3.97E-6								4.52E-4	6.43E-5	
B5	301	Bleaching, E2-stage tower vent		8.83E-5	4.06E-5	2.50E-3							1.03E-2	1.08E-2	
B5	303	Bleaching, E2-stage washer vent		1.00E-3	5.00E-4	2.50E-3							2.93E-2	4.41E-2	
B5	305	Bleaching, E2-stage seal tank vent		6.18E-4	3.31E-4	8.01E-5							1.25E-2	2.32E-2	

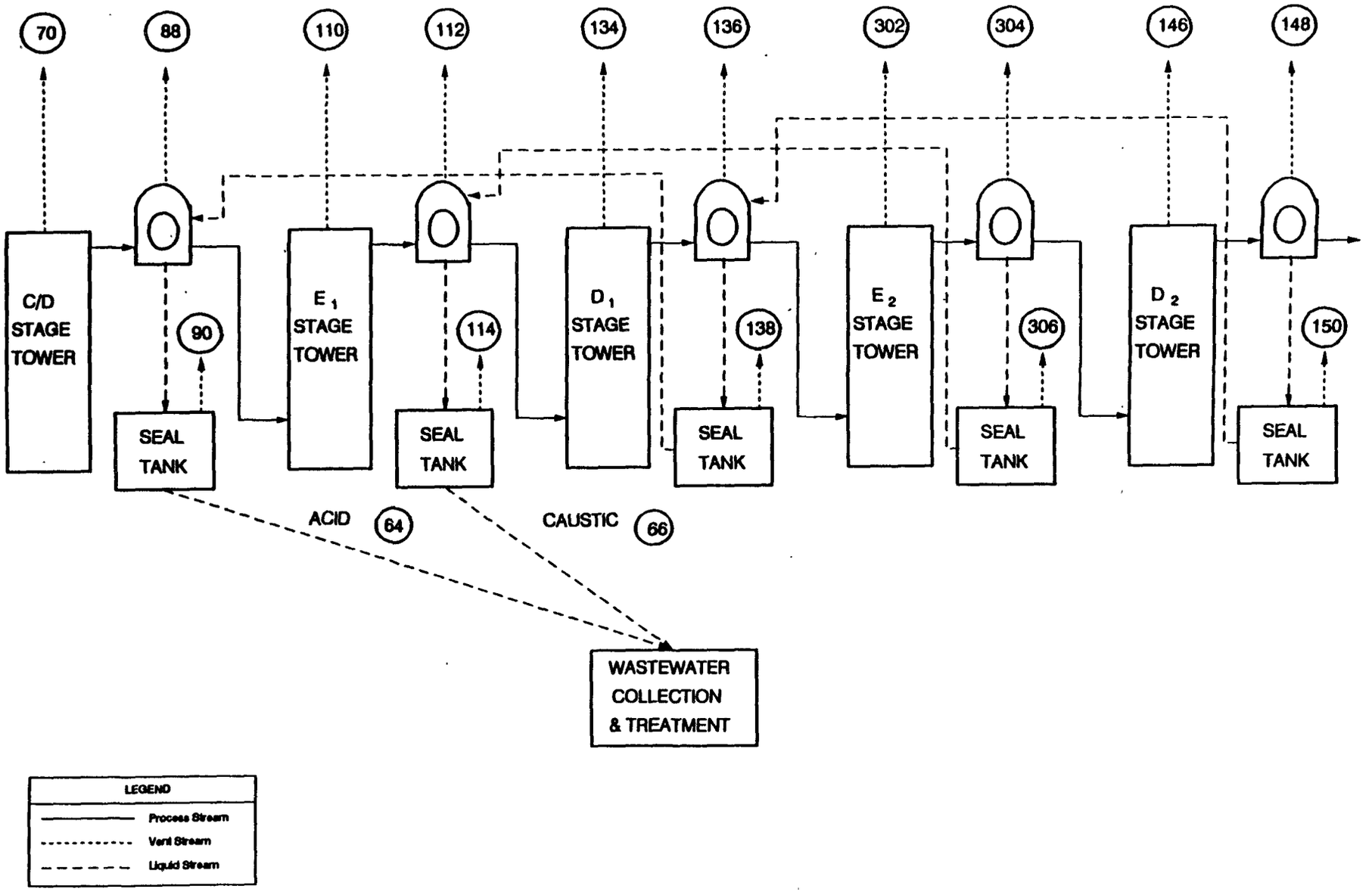

Figure B6. Bleaching Identification - CdEDED (LOW) SWD

Model B6 Stream Characteristics

MPU_CODE	EP_CODE	SOURCE	PROC_TYPE	WOOD_TYP	ENCLOSURE	SOURCE_TYP	VFLO_FAC	SFLO_FAC	VHAP_CON	SHAP_CON	HAL_STATUS
B6	64	Bleaching, C-stage acid sewer	BLEACH	SOFT		STREAM		1.04E+1		2.05E+1	Y
B6	66	Bleaching, ClO2 subst. (low) caustic sewer	BLEACH	SOFT		STREAM		9.06E+0		4.68E+0	Y
B6	70	Bleaching, C-stage tower vent	BLEACH	SOFT		VENT	2.40E-2		1.29E+3		Y
B6	88	Bleaching, C-stage washer vent	BLEACH	SOFT		VENT	3.62E-1		9.74E+1		Y
B6	90	Bleaching, C-stage seal tank vent	BLEACH	SOFT		VENT	1.40E-2		2.97E+2		Y
B6	110	Bleaching, E1-stage (low) tower vent	BLEACH	SOFT		VENT	2.40E-2		1.56E+2		Y
B6	112	Bleaching, E1-stage (low) washer vent	BLEACH	SOFT		VENT	3.62E-1		2.53E+1		Y
B6	114	Bleaching, E1-stage (low) seal tank vent	BLEACH	SOFT		VENT	1.40E-2		2.56E+2		Y
B6	134	Bleaching, D1-stage (low) tower vent	BLEACH	SOFT		VENT	2.40E-2		1.79E+2		Y
B6	136	Bleaching, D1-stage (low) washer vent	BLEACH	SOFT		VENT	3.62E-1		2.01E+1		Y
B6	138	Bleaching, D1 [illegible]age (low) seal tank vent	BLEACH	SOFT		VENT	1.40E-2		1.61E+2		Y
B6	146	Bleaching, D2 stage tower vent	BLEACH	SOFT		VENT	2.40E-2		6.59E+1		Y
B6	148	Bleaching, D2-stage washer vent	BLEACH	SOFT		VENT	3.62E-1		4.57E+0		Y
B6	150	Bleaching, D2-stage seal tank vent	BLEACH	SOFT		VENT	1.40E-2		4.59E+0		Y
B6	302	Bleaching, E2-stage tower vent	BLEACH	SOFT		VENT	2.40E-2		6.91E+1		Y
B6	304	Bleaching, E2-stage washer vent	BLEACH	SOFT		VENT	3.62E-1		1.21E+1		Y
B6	306	Bleaching, E2-stage seal tank vent	BLEACH	SOFT		VENT	1.40E-2		1.28E+2		Y

Model B6 - Emission Factor Summary

MPU_CODE	EP_CODE	SOURCE	ACET_EF	MEOH_EF	CTET_EF	MEK_EF	PCDB_EF	FORM_EF	HCL_EF	CL2_EF	MECL_EF	CHCL3_EF	L_BENZ_EF	PHENL_EF	MCHCL3EF	TCP245EF
B6	64	Bleaching, C-stage acid sewer	1.00E-3	2.00E-1		3.00E-3		1.00E-3			3.00E-3	3.80E-3			2.00E-7	3.70E-4
B6	66	Bleaching, ClO2 subst. (low) caustic sewer	1.00E-3	3.00E-2		2.00E-3		3.40E-3			3.00E-3	1.74E-3			2.00E-6	
B6	70	Bleaching, C-stage tower vent	3.66E-5	2.08E-3		1.03E-4		3.07E-5		2.10E-1	3.58E-4	4.32E-3			1.00E-4	
B6	88	Bleaching, C-stage washer vent	5.00E-4	3.00E-2		1.00E-3		4.00E-4		2.10E-1	5.00E-4	4.32E-3			1.00E-4	
B6	90	Bleaching, C-stage seal tank vent	3.59E-4	2.25E-2		5.44E-4		2.77E-4		5.32E-3	4.56E-5	2.77E-4			1.39E-6	
B6	110	Bleaching, E1-stage (low) tower vent	2.20E-3	4.85E-4		3.10E-3		3.84E-6	2.69E-5	3.00E-3	3.58E-3	1.06E-2			3.00E-4	
B6	112	Bleaching, E1-stage (low) washer vent	3.00E-2	7.00E-3		3.00E-2		5.00E-5	4.00E-4	3.00E-3	5.00E-3	1.06E-2			3.00E-4	
B6	114	Bleaching, E1-stage (low) seal tank vent	2.16E-2	5.25E-3		1.63E-2		3.46E-5	3.07E-4	7.61E-5	4.56E-4	6.78E-4			4.17E-6	
B6	134	Bleaching, D1-stage (low) tower vent	7.32E-5	2.08E-4		3.10E-4		9.21E-4		1.00E-2	4.30E-3	1.43E-2				
B6	136	Bleaching, D1-stage (low) washer vent	1.00E-3	3.00E-3		3.00E-3		1.20E-2		1.00E-2	6.00E-3	1.43E-2				
B6	138	Bleaching, D1-stage (low) seal tank vent	7.18E-4	2.25E-3		1.63E-3		8.30E-3		2.54E-4	5.47E-4	9.15E-4				
B6	146	Bleaching, D2-stage tower vent	2.90E-7	6.90E-7		2.10E-7		4.61E-6		1.00E-2	1.08E-3	3.38E-5				
B6	148	Bleaching, D2-stage washer vent	4.00E-6	1.00E-5		2.00E-6		6.00E-5		1.00E-2	1.50E-3	3.38E-5				
B6	150	Bleaching, D2-stage seal tank vent	2.87E-6	7.50E-6		1.09E-6		4.15E-5		2.54E-4	1.37E-4	2.96E-6				
B6	302	Bleaching, E2-stage tower vent	1.10E-3	2.42E-4		1.55E-3		1.92E-6	1.34E-5		1.79E-3	5.28E-3			1.50E-4	
B6	304	Bleaching, E2-stage washer vent	1.50E-2	3.50E-3		1.50E-2		2.50E-5	2.00E-4		2.50E-3	5.28E-3			1.50E-4	
B6	306	Bleaching, E2-stage seal tank vent	1.08E-2	2.63E-3		8.16E-3		1.73E-5	1.54E-4		2.28E-4	3.39E-4			2.09E-6	

MPU_CODE	EP_CODE	SOURCE	PCP_EF	ACROLEINEF	PROPAL_EF	TOLUENE_EF	CMETHANEEF	TCDD_EF	TCDF_EF	ACETOPHNEF	CARBDIS_EF	HEXANE_EF	TOTHAPEF	TOTVOCEF	TRS_EF
B6	64	Bleaching, C-stage acid sewer	1.75E-3	5.00E-5	3.00E-4	3.00E-6	3.00E-5						2.12E-1	2.22E-1	
B6	66	Bleaching, ClO2 subst. (low) caustic sewer		1.00E-4	8.00E-4	1.00E-6							4.20E-2	4.00E-2	
B6	70	Bleaching, C-stage tower vent		1.77E-6	8.12E-6	6.00E-4	5.00E-4						2.18E-1	7.73E-3	
B6	88	Bleaching, C-stage washer vent		2.00E-5	1.00E-4	6.00E-4	5.00E-4						2.48E-1	3.78E-2	
B6	90	Bleaching, C-stage seal tank vent		1.24E-5	6.62E-5	1.92E-5	2.27E-5						2.92E-2	2.43E-2	
B6	110	Bleaching, E1-stage (low) tower vent		1.77E-4	8.12E-5	5.00E-3							2.63E-2	2.43E-2	
B6	112	Bleaching, E1-stage (low) washer vent		2.00E-3	1.00E-3	5.00E-3							6.43E-2	9.08E-2	
B6	114	Bleaching, E1-stage (low) seal tank vent		1.24E-3	6.62E-4	1.60E-4							2.52E-2	4.66E-2	
B6	134	Bleaching, D1-stage (low) tower vent		4.42E-5	1.62E-4								3.02E-2	1.60E-2	
B6	136	Bleaching, D1-stage (low) washer vent		5.00E-4	2.00E-3								5.12E-2	3.62E-2	
B6	138	Bleaching, D1-stage (low) seal tank vent		3.09E-4	1.32E-3								1.58E-2	1.57E-2	
B6	146	Bleaching, D2-stage tower vent		1.80E-7	4.90E-7								1.11E-2	4.07E-5	
B6	148	Bleaching, D2-stage washer vent		2.00E-6	6.00E-6								1.16E-2	1.23E-4	
B6	150	Bleaching, D2-stage seal tank vent		1.24E-6	3.97E-6								4.52E-4	6.43E-5	
B6	302	Bleaching, E2-stage tower vent		8.83E-5	4.06E-5	2.50E-3							1.17E-2	1.21E-2	
B6	304	Bleaching, E2-stage washer vent		1.00E-3	5.00E-4	2.50E-3							3.07E-2	4.54E-2	
B6	306	Bleaching, E2-stage seal tank vent		6.18E-4	3.31E-4	8.01E-5							1.26E-2	2.33E-2	

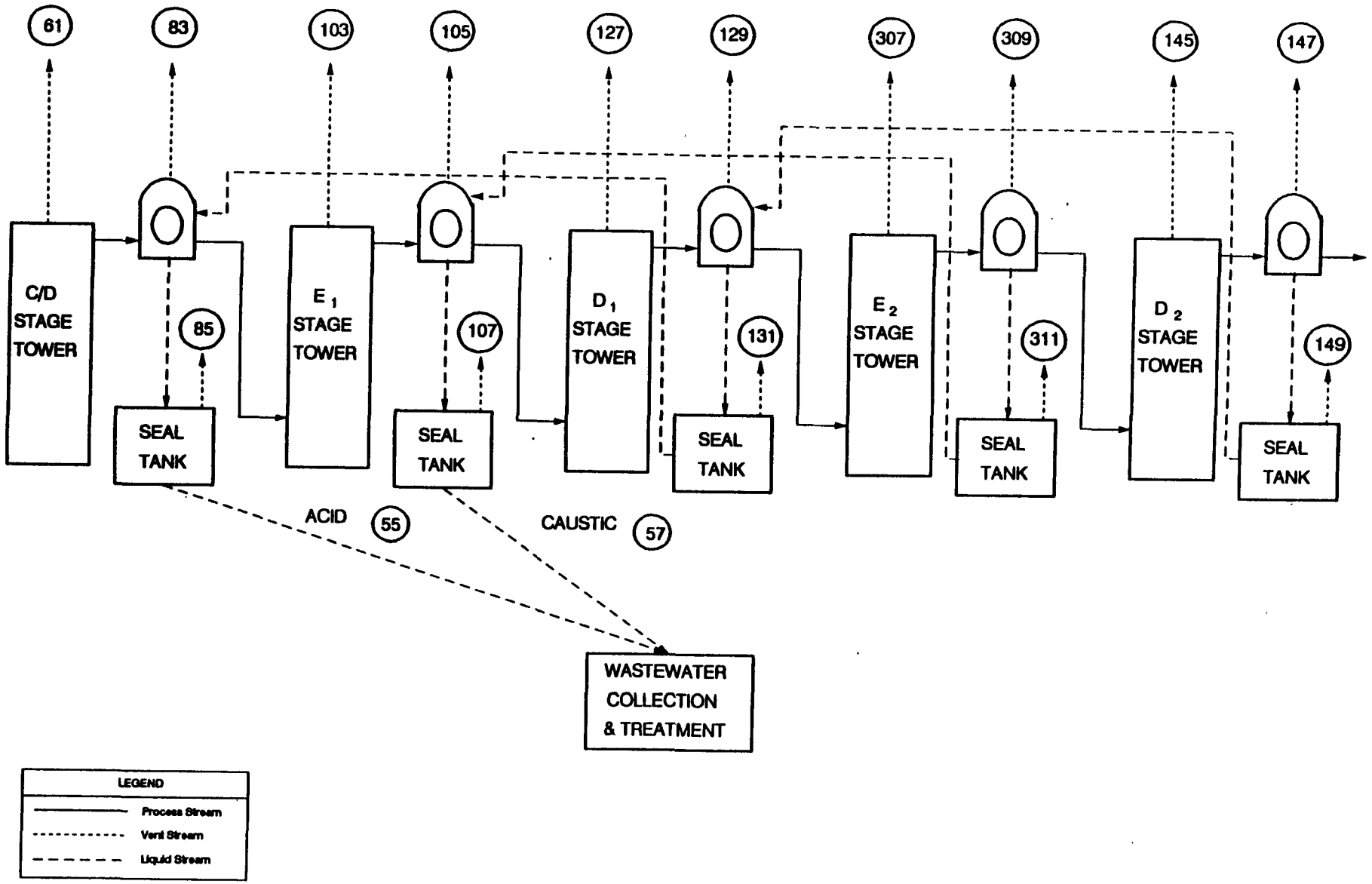

Figure B7. Bleaching Identification - CdEDED (HIGH) HWD

Model B7 - Stream Characteristics

NPU_CODE	EP_CODE	SOURCE	PROC_TYPE	WOOD_TYP	ENCLOSURE	SOURCE_TYP	VFLO_FAC	SFLO_FAC	VHAP_CON	SHAP_CON	HAL_STATUS
B7	55	Bleaching, C-stage acid sewer	BLEACH	HARD		STREAM		1.04E+1		5.09E+1	Y
B7	57	Bleaching, ClO2 subst. (high) caustic sewer	BLEACH	HARD		STREAM		9.06E+0		3.50E+1	Y
B7	61	Bleaching, C-stage tower vent	BLEACH	HARD		VENT	2.40E-2		3.75E+2		Y
B7	83	Bleaching, C-stage washer vent	BLEACH	HARD		VENT	3.62E-1		6.98E+1		Y
B7	85	Bleaching, C-stage seal tank vent	BLEACH	HARD		VENT	1.40E-2		9.34E+2		Y
B7	103	Bleaching, E1-stage (high) tower vent	BLEACH	HARD		VENT	2.40E-2		1.62E+2		Y
B7	105	Bleaching, E1-stage (high) washer vent	BLEACH	HARD		VENT	3.62E-1		6.61E+1		Y
B7	107	Bleaching, E1-stage (high) seal tank vent	BLEACH	HARD		VENT	1.40E-2		1.03E+3		Y
B7	127	Bleaching, D1-stage (high) tower vent	BLEACH	HARD		VENT	2.40E-2		6.61E+1		Y
B7	129	Bleaching, D1-stage (high) washer vent	BLEACH	HARD		VENT	3.62E-1		4.58E+0		Y
B7	131	Bleaching, D1-stage (high) seal tank vent	BLEACH	HARD		VENT	1.40E-2		4.60E+0		Y
B7	145	Bleaching, D2-stage tower vent	BLEACH	HARD		VENT	2.40E-2		6.60E+1		Y
B7	147	Bleaching, D2-stage washer vent	BLEACH	HARD		VENT	3.62E-1		4.57E+0		Y
B7	149	Bleaching, D2-stage seal tank vent	BLEACH	HARD		VENT	1.40E-2		4.59E+0		Y
B7	307	Bleaching, E2-stage tower vent	BLEACH	HARD		VENT	2.40E-2		8.10E+1		Y
B7	309	Bleaching, E2-stage washer vent	BLEACH	HARD		VENT	3.62E-1		3.30E+1		Y
B7	311	Bleaching, E2-stage seal tank vent	BLEACH	HARD		VENT	1.40E-2		5.13E+2		Y

Model B7 - Emission Factor Summary

NPU_CODE	EP_CODE	SOURCE	ACET_EF	MEOH_EF	CTET_EF	MEK_EF	PCDB_EF	FORM_EF	HCL_EF	CL2_EF	MECL_EF	CHCL3_EF	L_BENZ_EF	PHENL_EF	MCHCL3EF	TCP245EF
B7	55	Bleaching, C-stage acid sewer	2.70E-3	5.00E-1		2.00E-3		9.00E-3			6.00E-3	2.22E-3				3.70E-3
B7	57	Bleaching, ClO2 subst. (high) caustic sewer	3.50E-3	3.00E-1		7.00E-4		6.00E-3			3.30E-3	5.94E-4				
B7	61	Bleaching, C-stage tower vent	7.32E-5	7.62E-3	2.90E-4	7.23E-4	3.00E-4	2.99E-4	1.34E-5	5.00E-2	5.02E-4	1.17E-3			3.00E-4	
B7	83	Bleaching, C-stage washer vent	1.00E-3	1.10E-1	2.90E-4	7.00E-3	3.00E-4	3.90E-3	2.00E-4	5.00E-2	7.00E-4	1.17E-3			3.00E-4	
B7	85	Bleaching, C-stage seal tank vent	7.18E-4	8.25E-2	2.57E-6	3.81E-3	1.22E-5	2.70E-3	1.54E-4	1.27E-3	6.38E-5	7.48E-5			4.17E-6	
B7	103	Bleaching, E1-stage (high) tower vent	6.22E-3	5.40E-3		6.50E-3		4.07E-4			4.59E-3	3.96E-3				
B7	105	Bleaching, E1-stage (high) washer vent	8.50E-2	7.80E-2		6.30E-2		5.30E-3			6.40E-3	3.96E-3				
B7	107	Bleaching, E1-stage (high) seal tank vent	6.11E-2	5.85E-2		3.43E-2		3.67E-3			5.83E-4	2.54E-4				
B7	127	Bleaching, D1-stage (high) tower vent	2.90E-7	6.90E-7		2.10E-7		4.61E-6		1.00E-2	1.08E-3	6.28E-5				
B7	129	Bleaching, D1-stage (high) washer vent	4.00E-6	1.00E-5		2.00E-6		6.00E-5		1.00E-2	1.50E-3	6.28E-5				
B7	131	Bleaching, D1-stage (high) seal tank vent	2.87E-6	7.50E-6		1.09E-6		4.15E-5		2.54E-4	1.37E-4	4.03E-6				
B7	145	Bleaching, D2-stage tower vent	2.90E-7	6.90E-7		2.10E-7		4.61E-6		1.00E-2	1.08E-3	4.62E-5				
B7	147	Bleaching, D2-stage washer vent	4.00E-6	1.00E-5		2.00E-6		6.00E-5		1.00E-2	1.50E-3	4.62E-5				
B7	149	Bleaching, D2-stage seal tank vent	2.87E-6	7.50E-6		1.09E-6		4.15E-5		2.54E-4	1.37E-4	2.96E-6				
B7	307	Bleaching, E2-stage tower vent	3.11E-3	2.70E-3		3.25E-3		2.03E-4			2.29E-3	1.98E-3				
B7	309	Bleaching, E2-stage washer vent	4.25E-2	3.90E-2		3.15E-2		2.65E-3			3.20E-3	1.98E-3				
B7	311	Bleaching, E2-stage seal tank vent	3.05E-2	2.93E-2		1.71E-2		1.83E-3			2.92E-4	1.27E-4				

MPU_CODE	EP_CODE	SOURCE	PCP_EF	ACROLEINEF	PROPAL_EF	TOLUENE_EF	CMETHANEEF	TCDD_EF	TCDF_EF	ACETOPHNEF	CARBDIS_EF	HEXANE_EF	TOTHAPEF	TOTVOCEF	TRS_EF
87	55	Bleaching, C-stage acid sewer	1.75E-3	2.00E-4	1.10E-3	3.00E-8	2.50E-6						5.25E-1	5.31E-1	
87	57	Bleaching, ClO2 subst. (high) caustic sewer		1.60E-4	6.00E-4	6.00E-8							3.14E-1	3.15E-1	
87	61	Bleaching, C-stage tower vent		4.42E-5		6.00E-5	1.80E-3						6.32E-2	2.06E-2	
87	83	Bleaching, C-stage washer vent		5.00E-4		6.00E-5	1.80E-3						1.78E-1	1.36E-1	
87	85	Bleaching, C-stage seal tank vent		3.09E-4		1.92E-6	8.18E-5						9.18E-2	9.12E-2	
87	103	Bleaching, E1-stage (high) tower vent		1.85E-4	9.75E-5	6.00E-3							2.73E-2	3.00E-2	
87	105	Bleaching, E1-stage (high) washer vent		2.10E-3	1.20E-3	6.00E-3							1.68E-1	2.48E-1	
87	107	Bleaching, E1-stage (high) seal tank vent		1.30E-3	7.94E-4	1.92E-4							1.01E-1	1.61E-1	
87	127	Bleaching, D1-stage (high) tower vent		1.80E-7	4.90E-7								1.11E-2	6.97E-5	
87	129	Bleaching, D1-stage (high) washer vent		2.00E-6	6.00E-6								1.16E-2	1.52E-4	
87	131	Bleaching, D1-stage (high) seal tank vent		1.24E-6	3.97E-6								4.53E-4	6.54E-5	
87	145	Bleaching, D2-stage tower vent		1.80E-7	4.90E-7								1.11E-2	5.31E-5	
87	147	Bleaching, D2-stage washer vent		2.00E-6	6.00E-6								1.16E-2	1.35E-4	
87	149	Bleaching, D2-stage seal tank vent		1.24E-6	3.97E-6								4.52E-4	6.43E-5	
87	307	Bleaching, E2-stage tower vent		9.27E-5	4.87E-5	3.00E-3							1.37E-2	1.50E-2	
87	309	Bleaching, E2-stage washer vent		1.05E-3	6.00E-4	3.00E-3							8.40E-2	1.24E-1	
87	311	Bleaching, E2-stage seal tank vent		6.49E-4	3.97E-4	9.62E-5							5.04E-2	8.07E-2	

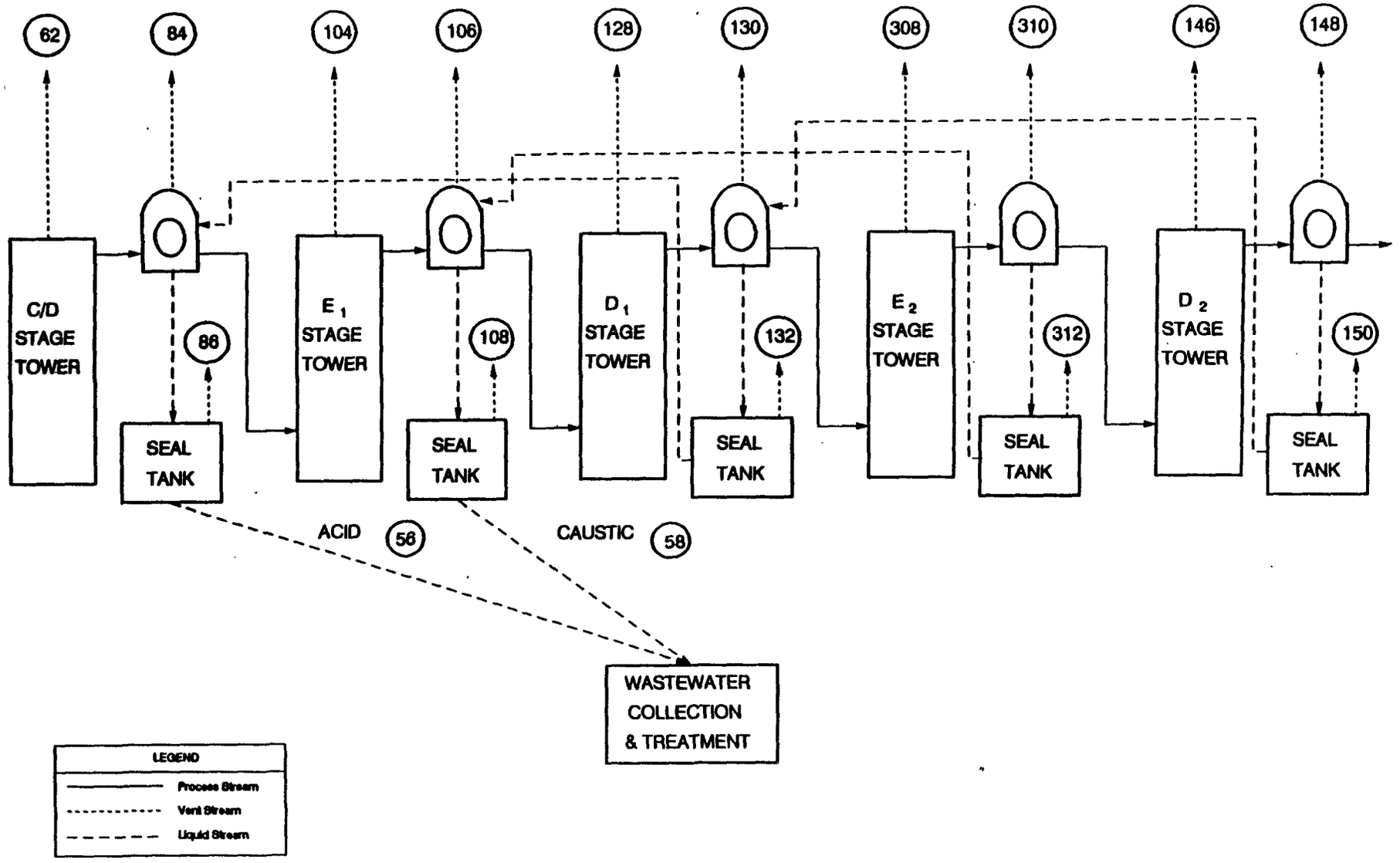

Figure B8. Bleaching Identification - CdEDED (HIGH) SWD

Model B8 - Stream Characteristics

MPU_CODE	EP_CODE	SOURCE	PROC_TYPE	WOOD_TYP	ENCLOSURE	SOURCE_TYP	VFLO_FAC	SFLO_FAC	VHAP_CON	SHAP_CON	HAL_STATUS
B8	56	Bleaching, C-stage acid sewer	BLEACH	SOFT		STREAM		1.04E+1		5.05E+1	Y
B8	58	Bleaching, ClO2 subst. (high) caustic sewer	BLEACH	SOFT		STREAM		9.06E+0		3.50E+1	Y
B8	62	Bleaching, C-stage tower vent	BLEACH	SOFT		VENT	2.40E-2		3.20E+2		Y
B8	84	Bleaching, C-stage washer vent	BLEACH	SOFT		VENT	3.62E-1		2.46E+1		Y
B8	86	Bleaching, C-stage seal tank vent	BLEACH	SOFT		VENT	1.40E-2		8.58E+1		Y
B8	104	Bleaching, E1-stage (high) tower vent	BLEACH	SOFT		VENT	2.40E-2		1.56E+2		Y
B8	106	Bleaching, E1-stage (high) washer vent	BLEACH	SOFT		VENT	3.62E-1		6.57E+1		Y
B8	108	Bleaching, E1-stage (high) seal tank vent	BLEACH	SOFT		VENT	1.40E-2		1.03E+3		Y
B8	128	Bleaching, D1-stage (high) tower vent	BLEACH	SOFT		VENT	2.40E-2		6.64E+1		Y
B8	130	Bleaching, D1-stage (high) washer vent	BLEACH	SOFT		VENT	3.62E-1		4.60E+0		Y
B8	132	Bleaching, D1-stage (high) seal tank vent	BLEACH	SOFT		VENT	1.40E-2		4.63E+0		Y
B8	146	Bleaching, D2-stage tower vent	BLEACH	SOFT		VENT	2.40E-2		6.59E+1		Y
B8	148	Bleaching, D2-stage washer vent	BLEACH	SOFT		VENT	3.62E-1		4.57E+0		Y
B8	150	Bleaching, D2-stage seal tank vent	BLEACH	SOFT		VENT	1.40E-2		4.59E+0		Y
B8	308	Bleaching, E2-stage tower vent	BLEACH	SOFT		VENT	2.40E-2		7.79E+1		Y
B8	310	Bleaching, E2-stage washer vent	BLEACH	SOFT		VENT	3.62E-1		3.28E+1		Y
B8	312	Bleaching, E2-stage seal tank vent	BLEACH	SOFT		VENT	1.40E-2		5.13E+2		Y

Model B8 - Emission Factor Summary

MPU_CODE	EP_CODE	SOURCE	ACET_EF	MEOH_EF	CTET_EF	MEK_EF	PCDB_EF	FORM_EF	HCL_EF	CL2_EF	MECL_EF	CHCL3_EF	L_BENZ_EF	PHENL_EF	MCHCL3EF	TCP245EF
B8	56	Bleaching, C-stage acid sewer	2.70E-3	5.00E-1		2.00E-3		9.00E-3			6.00E-3	1.96E-3				3.70E-4
B8	58	Bleaching, ClO2 subst. (high) caustic sewer	3.50E-3	3.00E-1		7.00E-4		6.00E-3			3.30E-3	8.96E-4				
B8	62	Bleaching, C-stage tower vent	2.20E-6	6.23E-4	3.00E-4	1.03E-6	3.00E-4		2.02E-5	5.00E-2	1.43E-4	1.93E-3				
B8	84	Bleaching, C-stage washer vent	3.00E-5	9.00E-3	3.00E-4	1.00E-5	3.00E-4		3.00E-4	5.00E-2	2.00E-4	1.93E-3				
B8	86	Bleaching, C-stage seal tank vent	2.16E-5	6.75E-3	2.66E-6	5.44E-6	1.22E-5		2.30E-4	1.27E-3	1.82E-5	1.24E-4				
B8	104	Bleaching, E1-stage (high) tower vent	6.22E-3	5.40E-3		6.50E-3		4.07E-4			4.59E-3	2.90E-3				
B8	106	Bleaching, E1-stage (high) washer vent	8.50E-2	7.80E-2		6.30E-2		5.30E-3			6.40E-3	2.90E-3				
B8	108	Bleaching, E1-stage (high) seal tank vent	6.11E-2	5.85E-2		3.43E-2		3.67E-3			5.83E-4	1.86E-4				
B8	128	Bleaching, D1-stage (high) tower vent	2.90E-7	6.90E-7		2.10E-7		4.61E-6		1.00E-2	1.08E-3	1.06E-4				
B8	130	Bleaching, D1-stage (high) washer vent	4.00E-6	1.00E-5		2.00E-6		6.00E-5		1.00E-2	1.50E-3	1.06E-4				
B8	132	Bleaching, D1-stage (high) seal tank vent	2.87E-6	7.50E-6		1.09E-6		4.15E-5		2.54E-4	1.37E-4	6.81E-6				
B8	146	Bleaching, D2-stage tower vent	2.90E-7	6.90E-7		2.10E-7		4.61E-6		1.00E-2	1.08E-3	3.38E-5				
B8	148	Bleaching, D2-stage washer vent	4.00E-6	1.00E-5		2.00E-6		6.00E-5		1.00E-2	1.50E-3	3.38E-5				
B8	150	Bleaching, D2-stage seal tank vent	2.87E-6	7.50E-6		1.09E-6		4.15E-5		2.54E-4	1.37E-4	2.96E-6				
B8	308	Bleaching, E2-stage tower vent	3.11E-3	2.70E-3		3.25E-3		2.03E-4			2.29E-3	1.45E-3				
B8	310	Bleaching, E2-stage washer vent	4.25E-2	3.90E-2		3.15E-2		2.65E-3			3.20E-3	1.45E-3				
B8	312	Bleaching, E2-stage seal tank vent	3.05E-2	2.93E-2		1.71E-2		1.83E-3			2.92E-4	9.30E-5				

MPU_CODE	EP_CODE	SOURCE	PCP_EF	ACROLEINEF	PROPAL_EF	TOLUENE_EF	CMETHANEEF	TCDD_EF	TCDF_EF	ACETOPHNEF	CARBDIS_EF	HEXANE_EF	TOTHAPEF	TOTVOCEF	TRS_EF
BB	56	Bleaching, C-stage acid sewer	1.75E-3	2.00E-4	1.10E-3	3.00E-8	2.50E-6						5.21E-1	5.28E-1	
BB	58	Bleaching, ClO2 subst. (high) caustic sewer		1.60E-4	6.00E-4	6.00E-8							3.15E-1	3.15E-1	
BB	62	Bleaching, C-stage tower vent		1.28E-6	2.00E-8	6.00E-5	5.00E-4						5.39E-2	3.72E-3	
BB	84	Bleaching, C-stage washer vent		1.28E-6	3.00E-7	6.00E-5	5.00E-4						6.26E-2	1.21E-2	
BB	86	Bleaching, C-stage seal tank vent		1.28E-6	2.00E-7	1.92E-6	2.27E-5						8.44E-3	6.94E-3	
BB	104	Bleaching, E1-stage (high) tower vent		1.85E-4	9.75E-5	6.00E-3							2.63E-2	2.89E-2	
BB	106	Bleaching, E1-stage (high) washer vent		2.10E-3	1.20E-3	6.00E-3							1.67E-1	2.47E-1	
BB	108	Bleaching, E1-stage (high) seal tank vent		1.30E-3	7.94E-4	1.92E-4							1.01E-1	1.61E-1	
BB	128	Bleaching, D1-stage (high) tower vent		1.80E-7	4.90E-7								1.12E-2	1.13E-4	
BB	130	Bleaching, D1-stage (high) washer vent		2.00E-6	6.00E-6								1.17E-2	1.95E-4	
BB	132	Bleaching, D1-stage (high) seal tank vent		1.24E-6	3.97E-6								4.56E-4	6.81E-5	
BB	146	Bleaching, D2-stage tower vent		1.80E-7	4.90E-7								1.11E-2	4.07E-5	
BB	148	Bleaching, D2-stage washer vent		2.00E-6	6.00E-6								1.16E-2	1.23E-4	
BB	150	Bleaching, D2-stage seal tank vent		1.24E-6	3.97E-6								4.52E-4	6.43E-5	
BB	308	Bleaching, E2-stage tower vent		9.27E-5	4.87E-5	3.00E-3							1.31E-2	1.44E-2	
BB	310	Bleaching, E2-stage washer vent		1.05E-3	6.00E-4	3.00E-3							8.35E-2	1.23E-1	
BB	312	Bleaching, E2-stage seal tank vent		6.49E-4	3.97E-4	9.62E-5							5.04E-2	8.06E-2	

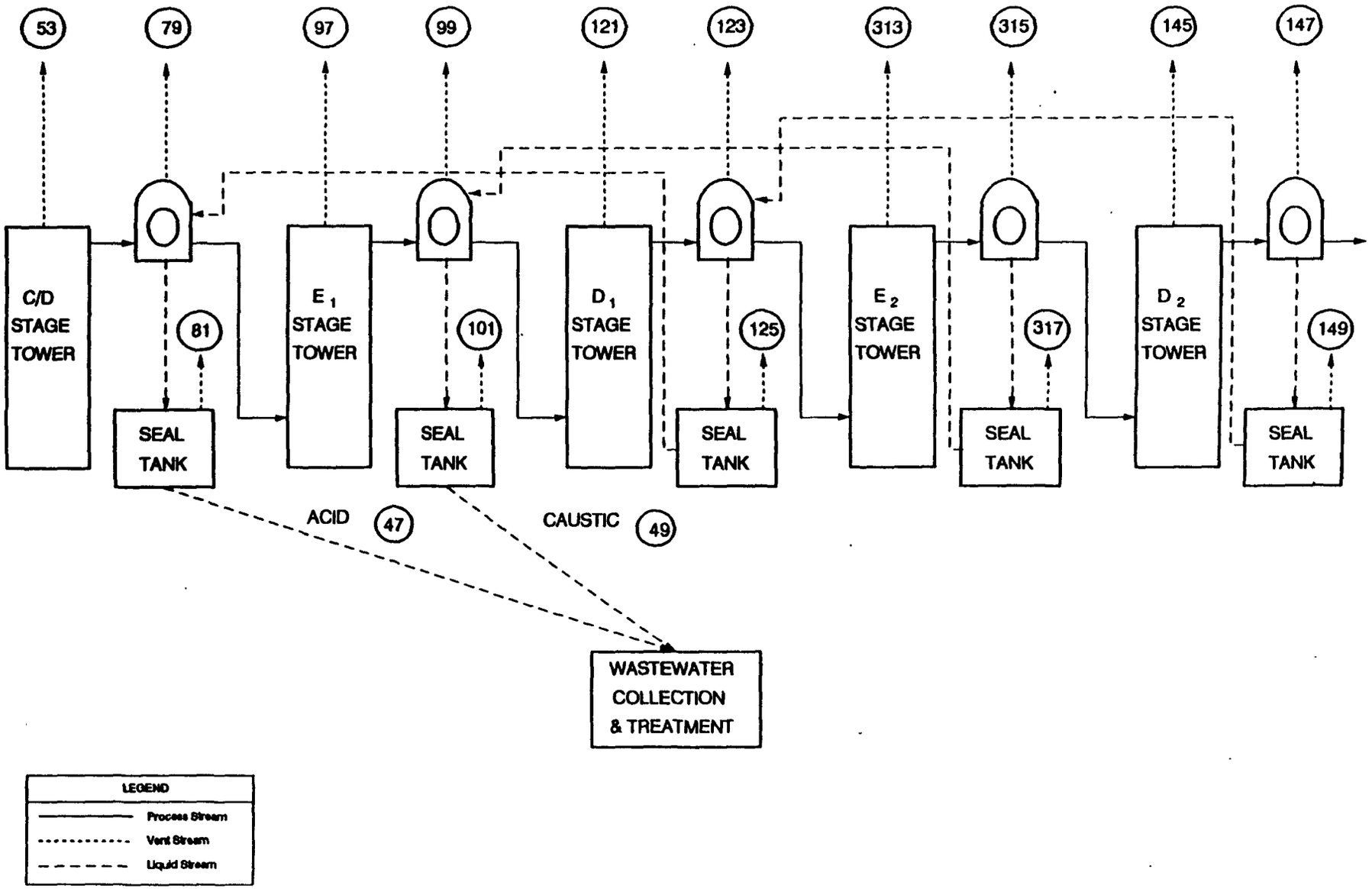

Figure B9. Bleaching Identification - CdEDED (100%) HWD

Model B9 - Stream Characteristics

MPU_CODE	EP_CODE	SOURCE	PROC_TYPE	WOOD_TYP	ENCLOSURE	SOURCE_TYP	VFLO_FAC	SFLO_FAC	VHAP_CON	SHAP_CON	HAL_STATUS
B9	47	Bleaching, C-stage acid sewer	BLEACH	HARD		STREAM		1.04E+1		5.04E+1	Y
B9	49	Bleaching, ClO2 subst. (100%) caustic sewer	BLEACH	HARD		STREAM		9.06E+0		3.49E+1	Y
B9	53	Bleaching, C-stage tower vent	BLEACH	HARD		VENT	2.40E-2		3.73E+2		Y
B9	79	Bleaching, C-stage washer vent	BLEACH	HARD		VENT	3.62E-1		6.97E+1		Y
B9	81	Bleaching, C-stage seal tank vent	BLEACH	HARD		VENT	1.40E-2		9.33E+2		Y
B9	97	Bleaching, E1-stage (100%) tower vent	BLEACH	HARD		VENT	2.40E-2		1.62E+2		Y
B9	99	Bleaching, E1-stage (100%) washer vent	BLEACH	HARD		VENT	3.62E-1		6.61E+1		Y
B9	101	Bleaching, E1-stage (100%) seal tank vent	BLEACH	HARD		VENT	1.40E-2		1.03E+3		Y
B9	121	Bleaching, D1-stage (100%) tower vent	BLEACH	HARD		VENT	2.40E-2		6.60E+1		Y
B9	123	Bleaching, D1-stage (100%) washer vent	BLEACH	HARD		VENT	3.62E-1		4.57E+0		Y
B9	125	Bleaching, D1-stage (100%) seal tank vent	BLEACH	HARD		VENT	1.40E-2		4.59E+0		Y
B9	145	Bleaching, D2-stage tower vent	BLEACH	HARD		VENT	2.40E-2		6.60E+1		Y
B9	147	Bleaching, D2-stage washer vent	BLEACH	HARD		VENT	3.62E-1		4.57E+0		Y
B9	149	Bleaching, D2-stage seal tank vent	BLEACH	HARD		VENT	1.40E-2		4.59E+0		Y
B9	313	Bleaching, E2-stage tower vent	BLEACH	HARD		VENT	2.40E-2		8.10E+1		Y
B9	315	Bleaching, E2-stage washer vent	BLEACH	HARD		VENT	3.62E-1		3.30E+1		Y
B9	317	Bleaching, E2-stage seal tank vent	BLEACH	HARD		VENT	1.40E-2		5.13E+2		Y

Model B9 - Emission Factor Summary

MPU_CODE	EP_CODE	SOURCE	ACET_EF	MEOH_EF	CTET_EF	MEK_EF	PCDB_EF	FORM_EF	HCL_EF	CL2_EF	MECL_EF	CHCL3_EF	L_BENZ_EF	PHENL_EF	MCHCL3EF	TCP245EF
B9	47	Bleaching, C-stage acid sewer	2.70E-3	5.00E-1		2.00E-3		9.00E-3			6.00E-3	8.98E-4				3.70E-4
B9	49	Bleaching, ClO2 subst. (100%) caustic sewer	3.50E-3	3.00E-1		7.00E-4		6.00E-3			3.30E-3	2.41E-4				
B9	53	Bleaching, C-stage tower vent	7.32E-5	7.62E-3	2.90E-4	7.23E-4	3.00E-4	2.99E-4	1.34E-5	5.00E-2	5.02E-4	8.57E-4			3.00E-4	
B9	79	Bleaching, C-stage washer vent	1.00E-3	1.10E-1	2.90E-4	7.00E-3	3.00E-4	3.90E-3	2.00E-4	5.00E-2	7.00E-4	8.57E-4			3.00E-4	
B9	81	Bleaching, C-stage seal tank vent	7.18E-4	8.25E-2	2.57E-6	3.81E-3	1.22E-5	2.70E-3	1.54E-4	1.27E-3	6.38E-5	5.51E-5			4.17E-6	
B9	97	Bleaching, E1-stage (100%) tower vent	6.22E-3	5.40E-3		6.50E-3		4.07E-4			4.59E-3	3.96E-3				
B9	99	Bleaching, E1-stage (100%) washer vent	8.50E-2	7.80E-2		6.30E-2		5.30E-3			6.40E-3	3.96E-3				
B9	101	Bleaching, E1-stage (100%) seal tank vent	6.11E-2	5.85E-2		3.43E-2		3.67E-3			5.83E-4	2.54E-4				
B9	121	Bleaching, D1-stage (100%) tower vent	2.90E-7	6.90E-7		2.10E-7		4.61E-6		1.00E-2	1.08E-3	4.62E-5				
B9	123	Bleaching, D1-stage (100%) washer vent	4.00E-6	1.00E-5		2.00E-6		6.00E-5		1.00E-2	1.50E-3	4.62E-5				
B9	125	Bleaching, D1-stage (100%) seal tank vent	2.87E-6	7.50E-6		1.09E-6		4.15E-5		2.54E-4	1.37E-4	2.96E-6				
B9	145	Bleaching, D2-stage tower vent	2.90E-7	6.90E-7		2.10E-7		4.61E-6		1.00E-2	1.08E-3	4.62E-5				
B9	147	Bleaching, D2-stage washer vent	4.00E-6	1.00E-5		2.00E-6		6.00E-5		1.00E-2	1.50E-3	4.62E-5				
B9	149	Bleaching, D2-stage seal tank vent	2.87E-6	7.50E-6		1.09E-6		4.15E-5		2.54E-4	1.37E-4	2.96E-6				
B9	313	Bleaching, E2-stage tower vent	3.11E-3	2.70E-3		3.25E-3		2.03E-4			2.29E-3	1.98E-3				
B9	315	Bleaching, E2-stage washer vent	4.25E-2	3.90E-2		3.15E-2		2.65E-3			3.20E-3	1.98E-3				
B9	317	Bleaching, E2-stage seal tank vent	3.05E-2	2.93E-2		1.71E-2		1.83E-3			2.92E-4	1.27E-4				

MPU_CODE	EP_CODE	SOURCE	PCP_EF	ACROLEINEF	PROPAL_EF	TOLUENE_EF	CMETHANEEF	TCDD_EF	TCDF_EF	ACETOPHNEF	CARBDIS_EF	HEXANE_EF	TOTHAPEF	TOTVOCEF	TRS_EF
B9	47	Bleaching, C-stage acid sewer	1.75E-3	2.00E-4	1.10E-3	3.00E-8	2.50E-6						5.20E-1	5.20E-1	
B9	49	Bleaching, ClO2 subst. (100%) caustic sewer		1.60E-4	6.00E-4	6.00E-8							3.14E-1	3.14E-1	
B9	53	Bleaching, C-stage tower vent		4.42E-5		6.00E-5	1.80E-3						6.29E-2	2.03E-2	
B9	79	Bleaching, C-stage washer vent		5.00E-4		6.00E-5	1.80E-3						1.77E-1	1.35E-1	
B9	81	Bleaching, C-stage seal tank vent		3.09E-4		1.92E-6	8.18E-5						9.18E-2	9.12E-2	
B9	97	Bleaching, E1-stage (100%) tower vent		1.85E-4	9.75E-5	6.00E-3							2.73E-2	3.00E-2	
B9	99	Bleaching, E1-stage (100%) washer vent		2.10E-3	1.20E-3	6.00E-3							1.68E-1	2.48E-1	
B9	101	Bleaching, E1-stage (100%) seal tank vent		1.30E-3	7.94E-4	1.92E-4							1.01E-1	1.61E-1	
B9	121	Bleaching, D1-stage (100%) tower vent		1.80E-7	4.90E-7								1.11E-2	5.31E-5	
B9	123	Bleaching, D1-stage (100%) washer vent		2.00E-6	6.00E-6								1.16E-2	1.35E-4	
B9	125	Bleaching, D1-stage (100%) seal tank vent		1.24E-6	3.97E-6								4.52E-4	6.43E-5	
B9	145	Bleaching, D2-stage tower vent		1.80E-7	4.90E-7								1.11E-2	5.31E-5	
B9	147	Bleaching, D2-stage washer vent		2.00E-6	6.00E-6								1.16E-2	1.35E-4	
B9	149	Bleaching, D2-stage seal tank vent		1.24E-6	3.97E-6								4.52E-4	6.43E-5	
B9	313	Bleaching, E2-stage tower vent		9.27E-5	4.87E-5	3.00E-3							1.37E-2	1.50E-2	
B9	315	Bleaching, E2-stage washer vent		1.05E-3	6.00E-4	3.00E-3							8.40E-2	1.24E-1	
B9	317	Bleaching, E2-stage seal tank vent		6.49E-4	3.97E-4	9.62E-5							5.04E-2	8.07E-2	

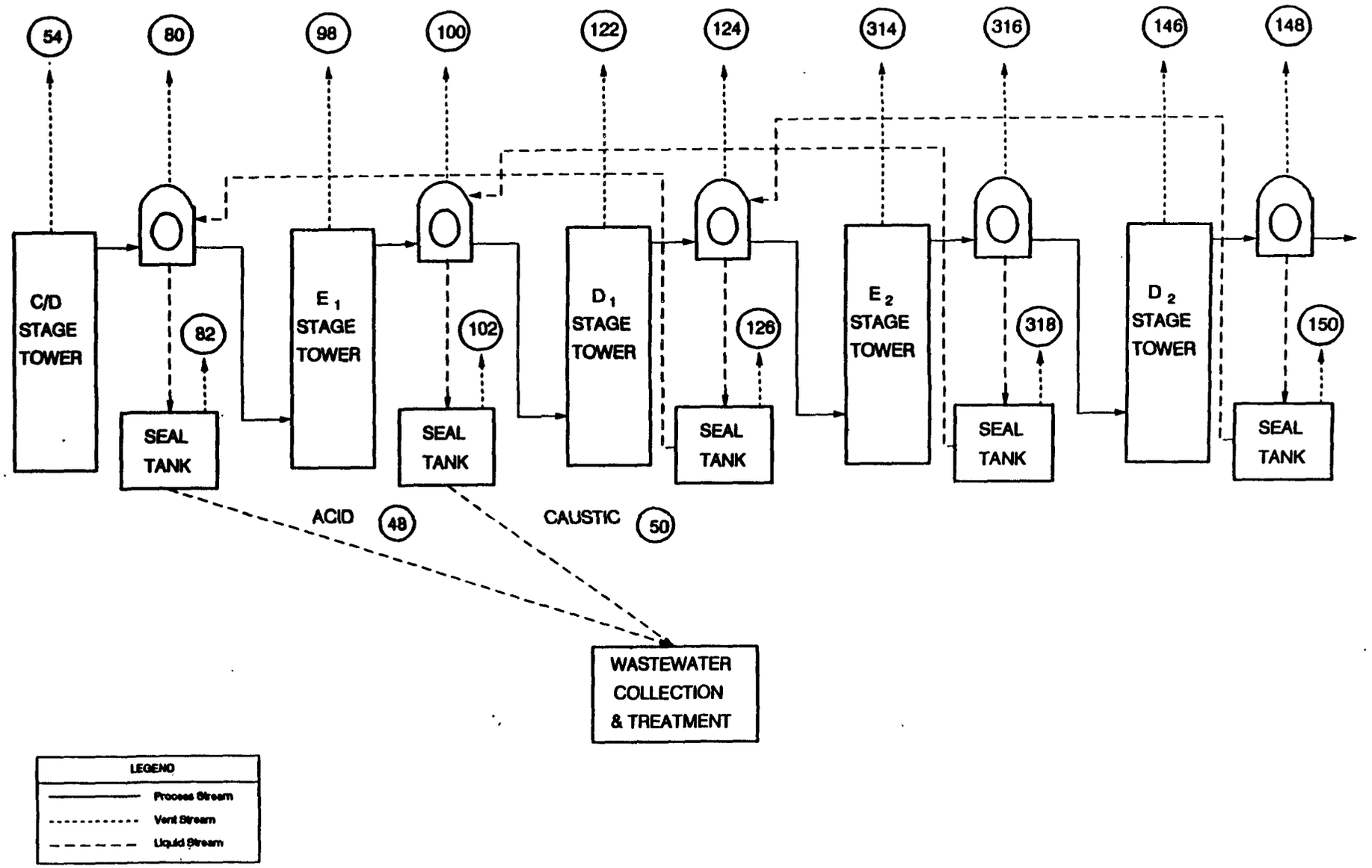

Figure B10. Bleaching Identification - CdEDED (100%) SWD

Model B10 - Stream Characteristics

MPU_CODE	EP_CODE	SOURCE	PROC_TYPE	WOOD_TYP	ENCLOSURE	SOURCE_TYP	VFLO_FAC	SFLO_FAC	VHAP_CON	SHAP_CON	HAL_STATUS
B10	48	Bleaching, C-stage acid sewer	BLEACH	SOFT		STREAM		1.04E+1		5.04E+1	Y
B10	50	Bleaching, ClO2 subst. (100%) caustic sewer	BLEACH	SOFT		STREAM		9.06E+0		3.50E+1	Y
B10	54	Bleaching, C-stage tower vent	BLEACH	SOFT		VENT	2.40E-2		3.20E+2		Y
B10	80	Bleaching, C-stage washer vent	BLEACH	SOFT		VENT	3.62E-1		2.46E+1		Y
B10	82	Bleaching, C-stage seal tank vent	BLEACH	SOFT		VENT	1.40E-2		8.58E+1		Y
B10	98	Bleaching, E1-stage (100%) tower vent	BLEACH	SOFT		VENT	2.40E-2		1.56E+2		Y
B10	100	Bleaching, E1-stage (100%) washer vent	BLEACH	SOFT		VENT	3.62E-1		6.57E+1		Y
B10	102	Bleaching, E1-stage (100%) seal tank vent	BLEACH	SOFT		VENT	1.40E-2		1.03E+3		Y
B10	122	Bleaching, D1-stage (100%) tower vent	BLEACH	SOFT		VENT	2.40E-2		6.59E+1		Y
B10	124	Bleaching, D1-stage (100%) washer vent	BLEACH	SOFT		VENT	3.62E-1		4.57E+0		Y
B10	126	Bleaching, D1-stage (100%) seal tank vent	BLEACH	SOFT		VENT	1.[illegible]0E-2		4.59E+0		Y
B10	146	Bleaching, D2-stage tower vent	BLEACH	SOFT		VENT	2.4[illegible]		6.59E+1		Y
B10	148	Bleaching, D2-stage washer vent	BLEACH	SOFT		VENT	3.62E-1		4.57E+0		Y
B10	150	Bleaching, D2-stage seal tank vent	BLEACH	SOFT		VENT	1.40E-2		4.59E+0		Y
B10	314	Bleaching, E2-stage tower vent	BLEACH	SOFT		VENT	2.40E-2		7.79E+1		Y
B10	316	Bleaching, E2-stage washer vent	BLEACH	SOFT		VENT	3.62E-1		3.28E+1		Y
B10	318	Bleaching, E2-stage seal tank vent	BLEACH	SOFT		VENT	1.40E-2		5.13E+2		Y

Model B10 - Emission Factor Summary

MPU_CODE	EP_CODE	SOURCE	ACET_EF	MEOH_EF	CTET_EF	MEK_EF	PCDB_EF	FORM_EF	HCL_EF	CL2_EF	MECL_EF	CHCL3_EF	L_BENZ_EF	PHENL_EF	MCHCL3EF	TCP245EF
B10	48	Bleaching, C-stage acid sewer	2.70E-3	5.00E-1		2.00E-3		9.00E-3			6.00E-3	8.07E-4				3.70E-4
B10	50	Bleaching, ClO2 subst. (100%) caustic sewer	3.50E-3	3.00E-1		7.00E-4		6.00E-3			3.30E-3	3.69E-4				
B10	54	Bleaching, C-stage tower vent	2.20E-6	6.23E-4	3.00E-4	1.03E-6	3.00E-4		2.02E-5	5.00E-2	1.43E-4	1.93E-3				
B10	80	Bleaching, C-stage washer vent	3.00E-5	9.00E-3	3.00E-4	1.00E-5	3.00E-4		3.00E-4	5.00E-2	2.00E-4	1.93E-3				
B10	82	Bleaching, C-stage seal tank vent	2.16E-5	6.75E-3	2.66E-6	5.44E-6	1.22E-5		2.30E-4	1.27E-3	1.82E-5	1.24E-4				
B10	98	Bleaching, E1-stage (100%) tower vent	6.22E-3	5.40E-3		6.50E-3		4.07E-4			4.59E-3	2.90E-3				
B10	100	Bleaching, E1-stage (100%) washer vent	8.50E-2	7.80E-2		6.30E-2		5.30E-3			6.40E-3	2.90E-3				
B10	102	Bleaching, E1-stage (100%) seal tank vent	6.11E-2	5.85E-2		3.43E-2		3.67E-3			5.83E-4	1.86E-4				
B10	122	Bleaching, D1-stage (100%) tower vent	2.90E-7	6.90E-7		2.10E-7		4.61E-6		1.00E-2	1.08E-3	3.38E-5				
B10	124	Bleaching, D1-stage (100%) washer vent	4.00E-6	1.00E-5		2.00E-6		6.00E-5		1.00E-2	1.50E-3	3.38E-5				
B10	126	Bleaching, D1-stage (100%) seal tank vent	2.87E-6	7.50E-6		1.09E-6		4.15E-5		2.54E-4	1.37E-4	2.96E-6				
B10	146	Bleaching, D2-stage tower vent	2.90E-7	6.90E-7		2.10E-7		4.61E-6		1.00E-2	1.08E-3	3.38E-5				
B10	148	Bleaching, D2-stage washer vent	4.00E-6	1.00E-5		2.00E-6		6.00E-5		1.00E-2	1.50E-3	3.38E-5				
B10	150	Bleaching, D2-stage seal tank vent	2.87E-6	7.50E-6		1.09E-6		4.15E-5		2.54E-4	1.37E-4	2.96E-6				
B10	314	Bleaching, E2-stage tower vent	3.11E-3	2.70E-3		3.25E-3		2.03E-4			2.29E-3	1.45E-3				
B10	316	Bleaching, E2-stage washer vent	4.25E-2	3.90E-2		3.15E-2		2.65E-3			3.20E-3	1.45E-3				
B10	318	Bleaching, E2-stage seal tank vent	3.05E-2	2.93E-2		1.71E-2		1.83E-3			2.92E-4	9.30E-5				

MPU_CODE	EP_CODE	SOURCE	PCP_EF	ACROLEINEF	PROPAL_EF	TOLUENE_EF	CMETHANEEF	TCDD_EF	TCDF_EF	ACETOPHNEF	CARBDIS_EF	HEXANE_EF	TOTHAPEF	TOTVOCEF	TRS_EF
B10	48	Bleaching, C-stage acid sewer	1.75E-3	2.00E-4	1.10E-3	3.00E-8	2.50E-6						5.20E-1	5.20E-1	
B10	50	Bleaching, ClO2 subst. (100%) caustic sewer		1.60E-4	6.00E-4	6.00E-8							3.14E-1	3.14E-1	
B10	54	Bleaching, C-stage tower vent		1.28E-6	2.00E-8	6.00E-5	5.00E-4						5.39E-2	3.72E-3	
B10	80	Bleaching, C-stage washer vent		1.28E-6	3.00E-7	6.00E-5	5.00E-4						6.26E-2	1.21E-2	
B10	82	Bleaching, C-stage seal tank vent		1.28E-6	2.00E-7	1.92E-6	2.27E-5						8.44E-3	6.94E-3	
B10	98	Bleaching, E1-stage (100%) tower vent		1.85E-4	9.75E-5	6.00E-3							2.63E-2	2.89E-2	
B10	100	Bleaching, E1-stage (100%) washer vent		2.10E-3	1.20E-3	6.00E-3							1.67E-1	2.47E-1	
B10	102	Bleaching, E1-stage (100%) seal tank vent		1.30E-3	7.94E-4	1.92E-4							1.01E-1	1.61E-1	
B10	122	Bleaching, D1-stage (100%) tower vent		1.80E-7	4.90E-7								1.11E-2	4.07E-5	
B10	124	Bleaching, D1-stage (100%) washer vent		2.00E-6	6.00E-6								1.16E-2	1.23E-4	
B10	126	Bleaching, D1-stage (100%) seal tank vent		1.24E-6	3.97E-6								4.52E-4	6.43E-5	
B10	146	Bleaching, D2-stage tower vent		1.80E-7	4.90E-7								1.11E-2	4.07E-5	
B10	148	Bleaching, D2-stage washer vent		2.00E-6	6.00E-6								1.16E-2	1.23E-4	
B10	150	Bleaching, D2-stage seal tank vent		1.24E-6	3.97E-6								4.52E-4	6.43E-5	
B10	314	Bleaching, E2-stage tower vent		9.27E-5	4.87E-5	3.00E-3							1.31E-2	1.44E-2	
B10	316	Bleaching, E2-stage washer vent		1.05E-3	6.00E-4	3.00E-3							8.35E-2	1.23E-1	
B10	318	Bleaching, E2-stage seal tank vent		6.49E-4	3.97E-4	9.62E-5							5.04E-2	8.06E-2	

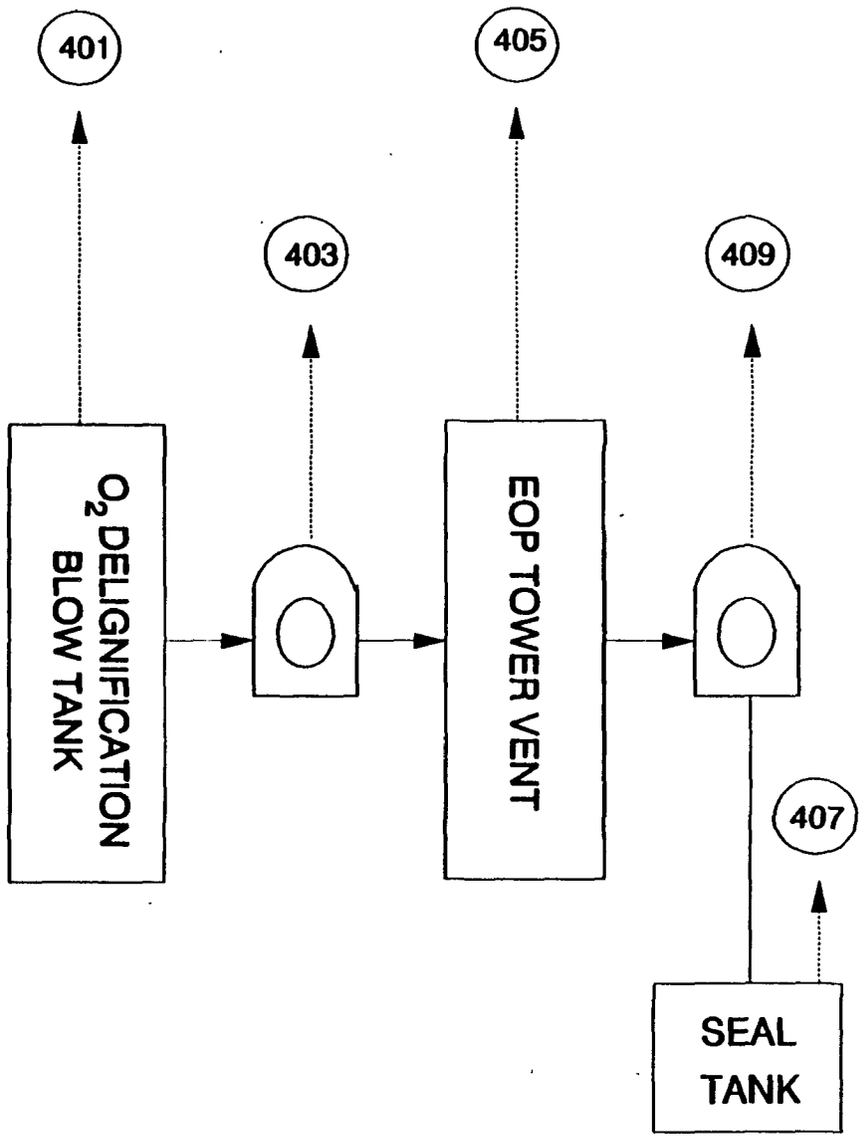

Figure B11. Totally Chlorine Free Bleaching - O-EOP (Hardwood)

Model B11 - Stream Characteristics

MPU_CODE	EP_CODE	SOURCE	PROC_TYPE	WOOD_TYP	ENCLOSURE	SOURCE_TYP	VFLO_FAC	SFLO_FAC	VHAP_CON	SHAP_CON	HAL_STATUS
B11	401	OXYGEN DELIG. BLOW TANK	BLEACH	HARD		VENT	2.60E-2		1.02E+2		N
B11	403	OXYGEN DELIG. WASHER TANK VENT	BLEACH	HARD		VENT	1.80E-1		1.92E+2		N
B11	405	EOP-STAGE (100%) TOWER VENT	BLEACH	HARD		VENT	2.40E-2		1.62E+2		N
B11	407	EOP-STAGE (100%) SEAL TANK VENT	BLEACH	HARD		VENT	1.40E-2		1.03E+3		N
B11	409	EOP-STAGE (100%) WASHER VENT	BLEACH	HARD		VENT	3.6[illegible]-1		6.61E+1		N

Model B11 - Emission Factor Summary

MPU_CODE	EP_CODE	SOURCE	ACET_EF	MEOH_EF	CTET_EF	MEK_EF	PCDB_EF	FORM_EF	HCL_EF	CL2_EF	MECL_EF	CHCL3_EF	L_BENZ_EF	PHENL_EF	MCHCL3EF	TCP245EF
B11	401	OXYGEN DELIG. BLOW TANK		4.72E-3		7.91E-3		4.13E-3								
B11	403	OXYGEN DELIG. WASHER TANK VENT	7.30E-2	7.60E-2		8.20E-2		5.97E-2								
B11	405	EOP-STAGE (100%) TOWER VENT	6.22E-3	1.26E-2		7.84E-3		4.07E-4								
B11	407	EOP-STAGE (100%) SEAL TANK VENT		5.92E-2		3.44E-2		3.67E-3								
B11	409	EOP-STAGE (100%) WASHER VENT	8.50E-2	8.68E-2		6.46E-2		5.30E-3								

MPU_CODE	EP_CODE	SOURCE	PCP_EF	ACROLEINEF	PROPAL_EF	TOLUENE_EF	CMETHANEEF	TCDD_EF	TCDF_EF	ACETOPHNEF	CARBDIS_EF	HEXANE_EF	TOTHAPEF	TOTVOCEF	TRS_EF
B11	401	OXYGEN DELIG BLOW TANK		1.63E-4	7.40E-4								1.87E-2	1.42E-1	
B11	403	OXYGEN DELIG. WASHER TANK VENT		2.00E-3	1.00E-2								2.43E-1	4.10E-1	
B11	405	EOP-STAGE (100%) TOWER VENT		1.85E-4	9.75E-5	6.00E-3							2.73E-2	3.46E-2	
B11	407	EOP-STAGE (100%) SEAL TANK VENT		1.30E-3	7.94E-4	1.92E-4							1.01E-1	1.01E-1	
B11	409	EOP-STAGE (100%) WASHER VENT		2.10E-3	1.20E-3	6.00E-3							1.68E-1	2.54E-1	

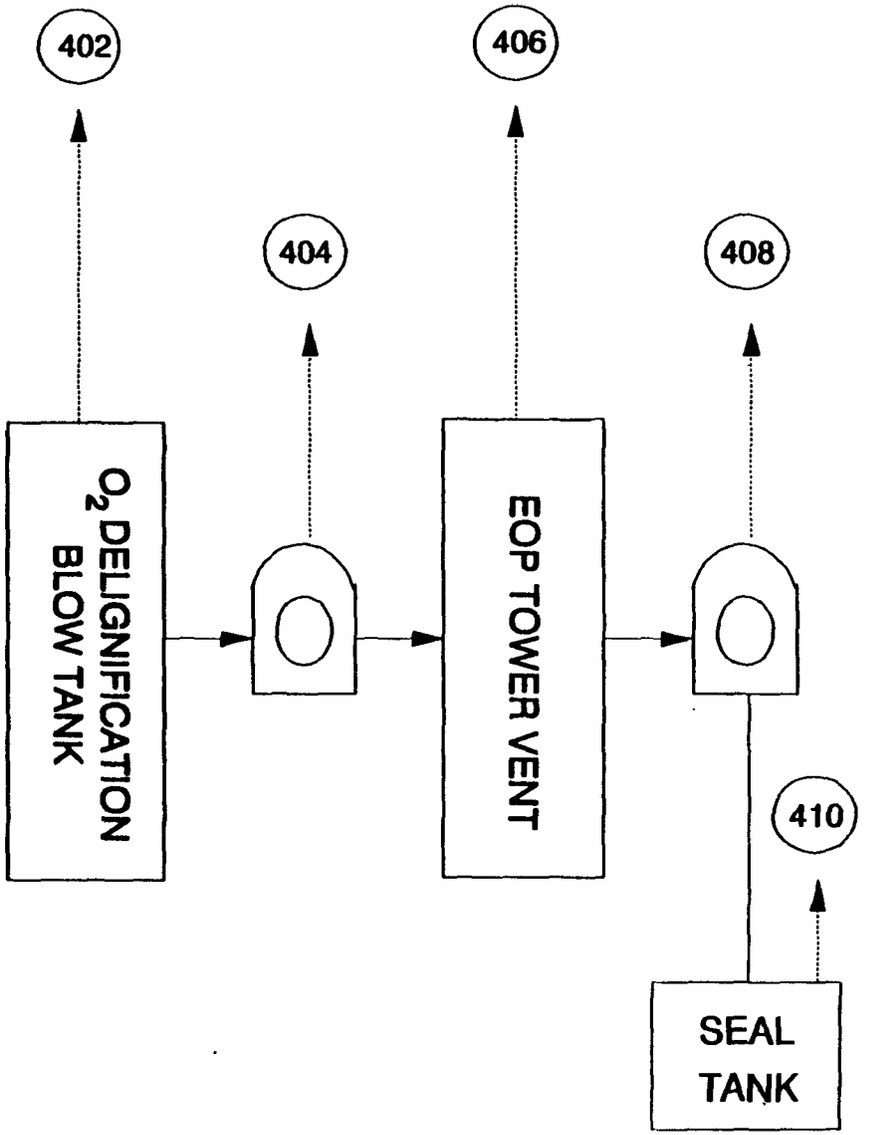

Figure B12. Totally Chlorine Free Bleaching - O-EOP (Softwood)

Model B12 - Stream Characteristics

MPU_CODE	EP_CODE	SOURCE	PROC_TYPE	WOOD_TYP	ENCLOSURE	SOURCE_TYP	VFLO_FAC	SFLO_FAC	VHAP_CON	SHAP_CON	HAL_STATUS
B12	402	OXYGEN DELIG. BLOW TANK	BLEACH	SOFT		VENT	2.60E-2		2.75E+2		N
B12	404	OXYGEN DELIG. WASHER TANK VENT	BLEACH	SOFT		VENT	1.80E-1		1.92E+2		N
B12	406	EOP-STAGE (100%) TOWER VENT	BLEACH	SOFT		VENT	2.40E-2		1.56E+2		N
B12	408	EOP-STAGE (100%) WASHER VENT	BLEACH	SOFT		VENT	3.62E-1		6.57E+1		N
B12	410	EOP-STAGE (100%) SEAL TANK VENT	BLEACH	SOFT		VENT	1.40E-2		1.03E+3		N

Model B12 - Emission Factor Summary

MPU_CODE	EP_CODE	SOURCE	ACET_EF	MEOH_EF	CTET_EF	MEK_EF	PCDB_EF	FORM_EF	MCL_EF	CL2_EF	MECL_EF	CHCL3_EF	L_BENZ_EF	PHENL_EF	MCHCL3EF	TCP245EF
B12	402	OXYGEN DELIG. BLOW TANK	1.00E-3	5.00E-2		2.00E-4										
B12	404	OXYGEN DELIG. WASHER TANK VENT	7.30E-2	7.60E-2		8.20E-2		5.97E-2								
B12	406	EOP-STAGE (100%) TOWER VENT	6.22E-3	1.17E-2		7.67E-3		4.07E-4								
B12	408	EOP-STAGE (100%) WASHER VENT	8.50E-2	8.59E-2		6.45E-2		5.30E-3								
B12	410	EOP-STAGE (100%) SEAL TANK VENT	6.11E-2	5.92E-2		3.44E-2		3.67E-3								

MPU_CODE	EP_CODE	SOURCE	PCP_EF	ACROLEINEF	PROPAL_EF	TOLUENE_EF	CMETHANEEF	TCDD_EF	TCDF_EF	ACETOPHNEF	CARBDIS_EF	HEXANE_EF	TOTHAPEF	TOTVOCEF	TRS_EF
B12	402	OXYGEN DELIG. BLOW TANK											5.02E-2	1.42E-1	
B12	404	OXYGEN DELIG. WASHER TANK VENT		2.00E-3	1.00E-2								2.43E-1	4.10E-1	
B12	406	EOP-STAGE (100%) TOWER VENT		1.85E-4	9.75E-5	6.00E-3							2.63E-2	3.35E-2	
B12	408	EOP-STAGE (100%) WASHER VENT		2.10E-3	1.20E-3	6.00E-3							1.67E-1	2.53E-1	
B12	410	EOP-STAGE (100%) SEAL TANK VENT		1.30E-3	7.94E-4	1.92E-4							1.01E-1	1.62E-1	

APPENDIX C.3

DEFINITION OF TERMS

Abbreviation	Description/Compound	Units[a]
ACET_EF	Acetone	kg/Mg pulp
MEOH_EF	Methanol	kg/Mg pulp
CTET_EF	Carbon tetrachloride	kg/Mg pulp
MEK_EF	2-Butanone (Methyl ethyl ketone)	kg/Mg pulp
H2S_EF	Hydrogen sulfide	kg/Mg pulp
MMER_EF	Methyl mercaptan	kg/Mg pulp
DIMES_EF	Dimethyl sulfide	kg/Mg pulp
DIMDS_EF	Dimethyl disulfide	kg/Mg pulp
ALPINE_EF	Alpha-pinene	kg/Mg pulp
HCL_EF	Hydrogen chloride	kg/Mg pulp
CL2_EF	Chlorine	kg/Mg pulp
CLO2_EF	Chlorine dioxide	kg/Mg pulp
MECL_EF	Methylene chloride	kg/Mg pulp
CHCL3_EF	Chloroform	kg/Mg pulp
L_BENZ_EF	Benzene	kg/Mg pulp
PHENOL_EF	Phenol	kg/Mg pulp
TCDD_EF	2,3,7,8-Tetrachloro-p-dioxin	kg/Mg pulp
TCDF_EF	2,3,7,8-Tetrachloro-p-furan	kg/Mg pulp
MCHCL3_EF	Methyl chloroform (1,1,1 Trichloroethane)	kg/Mg pulp
TCP245_EF	2,4,5-Trichlorophenol	kg/Mg pulp
TCP246_EF	2,4,6-Trichlorophenol	kg/Mg pulp

DEFINITION OF TERMS (Continued)

Abbreviation	Description/Compound	Units[a]
CLPHEN_EF	Chlorophenolics	kg/Mg pulp
PCP_EF	Pentachlorophenol	kg/Mg pulp
B_PINE_EF	Beta-pinene	kg/Mg pulp
ATERP_EF	Alpha-terpene	kg/Mg pulp
ACROLEIN_EF	Acrolein	kg/Mg pulp
ACETAL_EF	Acetaldehyde	kg/Mg pulp
PROPAL_EF	Propionaldehyde	kg/Mg pulp
DACETON_EF	Dichloroacetonitrile	kg/Mg pulp
TOLUENE_EF	Toluene	kg/Mg pulp
HEXANE_EF	Hexane	kg/Mg pulp
CMETHANE_EF	Chloromethane	kg/Mg pulp
PCYMENE_EF	p-Cymene	kg/Mg pulp
PCDB_EF	1,4-Dichlorobenzene	kg/Mg pulp
FORM_EF	Formaldehyde	kg/Mg pulp
ACETOPHN_EF	Acetophenone	kg/Mg pulp
DIMTS_EF	Dimethyl trisulfide	kg/Mg pulp
CARBDIS_EF	Carbon disulfide	kg/Mg pulp
THC_EF	Total hydrocarbon	kg/Mg pulp
TOTHAP_EF	Total HAP	kg/Mg pulp
TOTVOC_EF	Total VOC	kg/Mg pulp
TRS_EF	Total reduced sulfur	kg/Mg pulp
MPU_CODE	MPU code	Unitless
PROC_TYP	Process type	Unitless
PULP_TYP	Pulp type	Unitless
WOOD_TYP	Wood type	Unitless
EP_CODE	Emission point ID	Unitless
SOURCE	Source description	Unitless

DEFINITION OF TERMS (Continued)

Abbreviation	Description/Compound	Units[a]
VFLOW_FAC	Vent flowrate	scmm/Mg pulp/day
SFLO_FAC	Wastewater stream flowrate	ℓ/min/Mg pulp/day
VHAP_CON	Vent HAP concentration	ppmv
SHAP_CON	Wastewater stream HAP concentration	mg/L
HWD	Hardwood	Unitless
HAL_STATUS	Is the vent stream halogenated (yes or no)	Unitless
SWD	Softwood	Unitless
C	Chlorine	Unitless
Cd	Chlorine dioxide substitution	Unitless
E	Extraction	Unitless
H	Hypochlorite	Unitless
D	Chlorine dioxide	Unitless
ENCLOSURE	Number of enclosures required	Unitless

[a]Key:

kg/Mg pulp = Kilograms of air emissions per megagram of pulp produced.

scmm/Mg pulp = Standard cubic meters per minute vent flow per megagram of pulp produced.

ℓ/min = Liters of wastewater per minute.

ppmv = Parts per million by volume.

mg/ℓ = Milligrams of compound(s) per liter of wastewater.

REFERENCES

1. Memorandum from Olsen, T.R., Radian Corporation, to Shedd, S.A., EPA/CPB. Revised model process units for the Pulp and Paper NESHAP. September 21, 1993.

TECHNICAL REPORT DATA
(Please read Instructions on the reverse before completing)

. REPORT NO. EPA-453/R-93-050a	2.	3. RECIPIENT'S ACCESSION NO.
. TITLE AND SUBTITLE Pulp, Paper, and Paperboard Industry - Background Information for Proposed Air Emission Standards Manufacturing Processes at Kraft, Sulfite, Soda and Semi-Chemical Mills		5. REPORT DATE October 1993
		6. PERFORMING ORGANIZATION CODE
AUTHOR(S)		8. PERFORMING ORGANIZATION REPORT NO.
PERFORMING ORGANIZATION NAME AND ADDRESS Office of Air Quality Planning and Standards US Environmental Protection Agency Research Triangle Park, North Carolina 27711		10. PROGRAM ELEMENT NO.
		11. CONTRACT/GRANT NO. 68-D1-0117
. SPONSORING AGENCY NAME AND ADDRESS Office of Air and Radiation US Environmental Protection Agency Washington, D.C. 20460		13. TYPE OF REPORT AND PERIOD COVERED Interium Final
		14. SPONSORING AGENCY CODE EPA/200/04

. SUPPLEMENTARY NOTES

ABSTRACT

National emission standards for hazardous air pollutants (NESHAP) are being proposed for the pulp and paper industry under authority of Section 112(d) of the Clean Air Act as amended in 1990. This background information document provides technical information and analyses used in the development of the proposed pulp and paper NESHAP. This document covers air emission controls for wood pulping and bleaching processes at pulp mills and integrated mills (i.e., mills that combine on-site production of both pulp and paper). Effluent guideline limitations for pulp and paper mills are being developed concurrently under the Clean Water Act. Technical information used for the development of effluent guideline limitations is in separate documents.

KEY WORDS AND DOCUMENT ANALYSIS

DESCRIPTORS	b. IDENTIFIERS/OPEN ENDED TERMS	c. COSATI Field/Group
ir Pollution olatile Organic Compounds zardous Air Pollutants ulp and Paper Mills ulp Mills per Mills	Air Pollution Control	13 b
ISTRIBUTION STATEMENT limited	19. SECURITY CLASS *(This Report)* Unclassified 20. SECURITY CLASS *(This page)* Unclassified	21. NO. OF PAGES 385 22. PRICE

Form 2220-1 (Rev. 4-77) PREVIOUS EDITION IS OBSOLETE