Groundwater Sampling and Monitoring with Direct Push Technologies

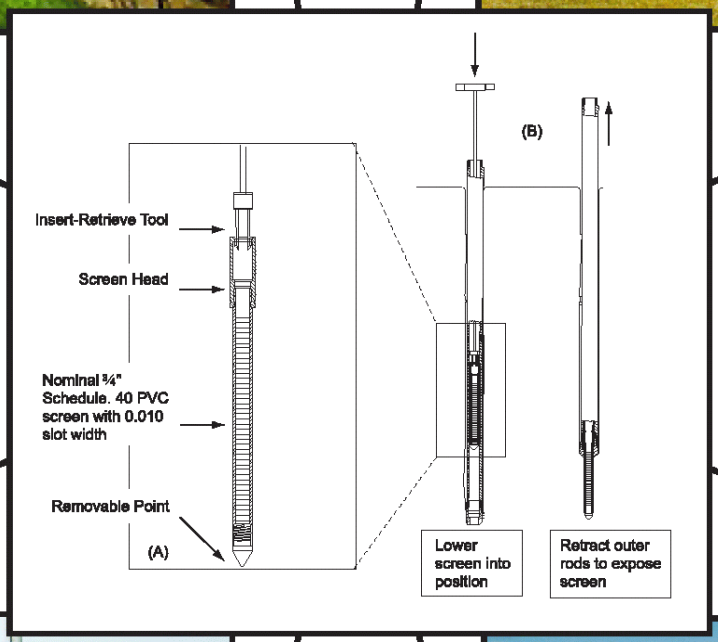

Solid Waste and
Emergency Response
(5204G)

OSWER No. 9200.1-51
EPA 540/R-04/005
August 2005
www.epa.gov

Groundwater Sampling and Monitoring with Direct Push Technologies

U.S. Environmental Protection Agency
Office of Solid Waste and Emergency Response
Washington, DC 20460

Recycled/Recyclable
Printed with Soy/Canola Ink on paper that contains at least 50% recycled fiber

This page left intentionally blank

NOTICE AND DISCLAIMER

This report has been funded wholly by the United States Environmental Protection Agency (EPA) under Contract Number 68-W-02-033. The report is not intended, nor can it be relied upon to create any rights enforceable by any party in litigation with the United States. Mention of trade names or commercial products does not constitute endorsement or recommendation for use.

Copies of this report are available free of charge from the National Service Center for Environmental Publications (NSCEP), P.O. Box 42419, Cincinnati, OH 45242-0419; telephone (800) 490-9198 or (513) 490-8190; or facsimile (513) 489-8695. Refer to document EPA 540/R-04/005, *Groundwater Sampling and Monitoring with Direct Push Technologies.*

This page left intentionally blank

Table of Contents

Figures . . . iii

Tables . . . iv

Abbreviations . . . v

Section 1: Introduction . . . 1
- Background . . . 1
- Intended Audience . . . 1
- Scope and Limitations . . . 1
- Advantages and Limitations of Direct Push Technologies . . . 2
- How to Use This Guidance . . . 3

Section 2: Summary of Direct Push Technology Groundwater Sampling Methods . . . 5
- Point-in-Time Sampling . . . 6
  - Sealed-Screen Samplers . . . 6
  - Multi-Level Samplers . . . 9
  - Open-Hole Sampling Methods . . . 12
- DPT Monitoring Well Installation . . . 14
  - Exposed-Screen Well Installation Methods . . . 14
  - Protected-Screen Well and Filter Pack Installation Methods . . . 16
- Specialized Measurement and Logging Tools . . . 18
  - Geotechnical . . . 20
  - Geophysical . . . 22
  - Hydrogeologic . . . 22
  - Analytical . . . 22
    - Induced Fluorescence Systems . . . 22
    - Volatilization and Removal Systems . . . 23

Section 3: Data Quality Objectives for Groundwater Sampling . . . 25
- Sample Bias . . . 25
  - Sample Turbidity . . . 29
  - Sample Disturbance . . . 32
  - Sampling Interval . . . 32
- Sample Volume . . . 33
- Sample Cross-Contamination . . . 33
- Selecting a DPT Groundwater Sampling Tool . . . 34

Section 4: Recommended Methods for Collecting Representative Groundwater Samples . . . 35
- Installation of a Filter Pack . . . 35
- Well Development . . . 36
- Low-Flow Purging and Sampling . . . 36
  - Theoretical and Research Basis for Low-Flow Purging and Sampling . . . 37

Low-Flow Purging and Sampling Protocols 38
Passive Sampling Protocols 38

Section 5: Recommended Methods for Minimizing Potential for Cross-Contamination 40
Avoiding Drag-down 40
Avoiding the Creation of Hydraulic Conduits 41
Decontaminating Equipment 41
Decommissioning DPT Wells and Borings 42
Retraction Grouting 42
Re entry Grouting 42
Surface Pouring 44

Section 6: Conclusions 45

References 47

Appendix: Purging and Sampling Devices 61

Figures

Figure Page

2-1 Sealed Screen Sampler 8
2.2 Exposed-Screen Sampler–Well Point Driven Below the Base of a Borehole 10
2.3 Schematic Illustration of Degrees of Drag-Down Potentially Induced by Direct Push Sampling Devices 11
2.4 Operation of the Waterloo Profiler 12
2.5 Collecting Samples From Discrete Depths (Profiling) Using the Waterloo Drive-Point Profiler 13
2.6 Schematic of the Geoprobe® DT21 Profiler 15
2.7 Photograph of Pre-Packed Well Screens 17
2.8 Small Diameter DPT Well Components 19
2.9 Bottom-Up Method for Grouting Small Annular Spaces of DPT Wells 20
2.10 Example of a Properly Constructed DPT Well Installation with Prepacked Well Screen 21
5.1 Methods for Sealing Direct Push Technology Holes 43

Tables

Table Page

2.1 Comparison of Various Direct Push Technology Sampling and Data Collection Capabilities 7
2.2 Annular Space for Well Completion Based on Size of Well Casing and Screen 17
3.1 Impacts of Sources of Bias on Specific Analytes During Sampling 26
3.2 Operational Characteristics and Appropriateness of Groundwater Sampling Devices for Specific Analytes 28
3.3 Log *n*-Octanol/Water Partition Coefficients (Log K_{ow}) of Common Organic Contaminants 31
3.4 Recommended DPT Groundwater Tools for Various Field Applications 34
4.1 Comparison Between Low-Flow and Passive Sampling 39

Abbreviations

ASTM	American Society for Testing and Materials
CPT	cone penetrometer testing
CSP	centrifugal submersible pump
DCE	dichloroethene
DNAPL	dense non-aqueous phase liquid
DO	dissolved oxygen
DPT	direct push technology
DQO	data quality objectives
FID	flame ionization detector
GC	gas chromatograph
ID	inner diameter
LIF	laser-induced fluorescence
LNAPL	light non-aqueous phase liquid
MIP	membrane interface probe
OD	outer diameter
ORP	oxidation/reduction potential
PAH	polycyclic aromatic hydrocarbon
PCB	polychlorinated biphenyl
PE	polyethylene
PP	polypropylene
PTFE	polytetrafluoroethylene
PVC	polyvinyl chloride
QC	quality control
RCRA	Resource Conservation and Recovery Act
ROST	Rapid Optical Screening Tool
SC	specific conductivity
SVOC	semi-volatile organic compound
TCE	trichloroethene
EPA	United States Environmental Protection Agency
UV	ultraviolet
VOC	volatile organic compound

This page is intentionally blank.

Section 1: Introduction

Background

Direct push technology (DPT, also known as "direct drive," "drive point," or "push technology") refers to a growing family of tools used for performing subsurface investigations by driving, pushing, and/or vibrating small-diameter hollow steel rods into the ground. By attaching sampling tools to the end of the steel rods they can be used to collect soil, soil-gas, and groundwater samples. DPT rods can also be equipped with probes that provide continuous in-situ measurements of subsurface properties (e.g., geotechnical characteristics and contaminant distribution). Interest in understanding how DPT groundwater collection methods compare with traditional monitoring well sampling methods has steadily increased since the mid-1980s when DPT first started being used for this purpose. Although environmental professionals recognize that DPT provide a cost-effective alternative to conventional approaches to subsurface sampling, some have been reluctant to use it for groundwater sampling because of uncertainty regarding the quality of samples that the technology can provide. This guidance is designed to encourage more widespread consideration of DPT by clarifying how DPT can be used to meet a variety of data quality requirements for a variety of site conditions.

Intended Audience

The primary audience for this guidance is EPA regional folks working on CERCLA, RCRA, and other related programs. It also may be useful for environmental professionals who oversee or undertake the collection of groundwater samples at contaminated sites and have a basic scientific understanding of groundwater sampling. Information is provided on the application and limitations of DPT for groundwater sampling activities. Although this document is not intended to provide substantial background information, Section 2 provides a general overview of DPT groundwater sampling and an extensive list of resources is cited within the text and listed in the reference section.

Scope and Limitations

This document focuses on groundwater sampling issues related to DPT, in particular those regarding the quality and usability of the groundwater data. Two general types of DPT groundwater sampling methods are discussed: "point-in-time" or "grab" sampling and sampling with direct push installed monitoring wells. In order to provide a concise and readable document, references are provided so that readers can access more detailed information where needed. Other uses of DPT, such as soil sampling, soil-gas sampling, and deployment of continuous logging equipment, generally are not controversial; therefore, they are not discussed at length. In addition, this guidance assumes a basic level of understanding of DPT equipment. Readers unfamiliar with DPT equipment should refer to:

- Expedited Site Assessment Tools for Underground Storage Tank Sites: A Guide for Regulators (EPA, 1997). Chapter V of this guide, Direct Push Technologies, provides a

good overview of the tools and their capabilities. It is available at: http://www.epa.gov/swerust1/pubs/sam.htm.

- The Field Analytical Technology Encyclopedia (FATE) contains a section on Direct Push Platforms. It is available at: http://fate.clu-in.org.

- ASTM direct push standards, Standard Guide for Installation of Direct Push Ground Water Monitoring Wells, D 6724-01; Standard Practice for Direct Push Installation of Prepacked Screen Monitoring Wells in Unconsolidated Aquifers, D 6725-01; Standard Guide for Direct-Push Water Sampling for Geoenvironmental Investigations, D-6001; and Standard Guide for Direct Push Soil Sampling for Environmental Site Characterization, D-6282. They are available for purchase at: http://www.astm.org.

This guidance is not intended to replace the knowledge and advice of an experienced hydrogeologist. Site-specific situations may dictate that an expert familiar with site conditions and project goals be involved in the planning and implementation of any groundwater sampling event. Furthermore, Federal and State regulatory requirements can vary substantially among jurisdictions and the appropriate regulatory and State agencies must be consulted to ensure that legal requirements are met.

Advantages and Limitations of Direct Push Technologies

Direct push technologies are a valuable tool for environmental investigations because they can offer a number of advantages over conventional well installation and sampling methods and can provide many other types of data to a project team (e.g., in-situ detection of contaminants, real-time geotechnical data). Some of the typical advantages of using DPT over monitoring wells drilled and installed with conventional tools, such as hollow stem augers, include:

- Faster sampling capability that helps to provide more data, thereby improving site decision making and facilitates the use of a dynamic work plan strategy;
- In general, lower cost when greater data density is needed;
- Greater variety of equipment and methods resulting in greater flexibility in meeting project goals;
- Capability of collecting depth-discrete groundwater samples to locate contaminated layers;
- Better vertical profiling capability for generating three-dimensional profiles of a site that improve the conceptual site model; and
- Less investigation-derived waste generated, thereby saving additional time and money while minimizing the potential for exposure to hazardous substances.

However, DPT cannot completely replace the use of conventional monitoring wells. Rather, DPT provides environmental professionals with additional choices from which to select equipment and methods for collecting groundwater samples. Conventional methods still have a number of potential advantages over DPT, including:

- Fewer limitations for deployment in a variety of geologic and hydrogeologic settings. For example, conventional DPT may not be able to penetrate some caliches, bedrock, or unconsolidated layers with significant amounts of gravel or cobbles. DPT is not recommended where telescoped wells are needed to prevent contaminant migration below confining layers;
- Deeper limit of subsurface penetration than DP rigs in most geologic settings; and
- Easier collection of large sample volumes.

Consequently, DPT and conventional monitoring well technologies may both be useful for groundwater sampling. They can provide environmental professionals with a variety of options to collect data sufficient for decision making, even when high quality groundwater samples are needed.

How to Use This Guidance

This guidance is divided into four major sections designed to expose the reader to potential issues and solutions regarding groundwater sampling with DPT:

- *Section 2: Summary of Direct Push Technology Groundwater Sampling Methods*: provides an overview of the different types of equipment available with DPT to collect groundwater.
- *Section 3: Data Quality Objectives for Groundwater Sampling*: provides the reader with a summary of groundwater data quality issues that should be considered while planning a groundwater sample collection activity.
- *Section 4: Recommended Methods for Collecting Representative Groundwater Samples*: provides the reader with information on filter packs, well development, and low-flow sampling methods as they relate to DPT.
- *Section 5: Recommended Methods for Minimizing the Potential for Cross-Contamination*: provides the reader with information on drag-down, hydraulic conduits, decontaminating equipment, and decommissioning DPT boreholes.

This page is intentionally blank.

Section 2: Summary of Direct Push Technology Groundwater Sampling Methods

DPT groundwater sampling equipment generally falls into one of two broad categories:

- **Point-in-time groundwater samplers:** These tools or devices, also referred to as "temporary samplers" or "grab samplers," are used to rapidly collect samples to define groundwater conditions during one sampling event. They are usually less than two inches outside diameter (OD) and are generally constructed of steel or stainless steel. Direct push methods (percussion or static weight) are used to advance point-in-time samplers below the static water level in unconsolidated formations. Generally, groundwater flows into the sampler from an exposed screen under ambient hydrostatic pressure. Groundwater may be collected from the sampler using bailers or pumps, or the sampler may be retracted to the surface to obtain the water sample. Once sampling is completed, these devices are removed and the boring should be abandoned in accordance with local regulations.

- **DPT-installed groundwater monitoring wells:** These monitoring wells are installed by direct push methods to permit short-term or long-term monitoring of groundwater and are usually two inches in diameter or less and constructed of PVC and/or stainless steel. Since monitoring wells are installed for periods of several months to several years, the annulus of the boring around the well casing is usually sealed to prevent migration of contaminants into the aquifer. Surface protection is required to prevent tampering with the well. A slotted or screened section permits groundwater to flow into the well under ambient hydrostatic pressure. Groundwater may be collected from monitoring wells using bailers, various pumps, or passive sampling devices.

Point-in-time sampling tools are typically used during site characterization to identify plume boundaries or hot spots. They cannot be used for long-term monitoring or trend analysis since the boreholes need to be decommissioned upon completion of sampling. In contrast, temporary and permanent monitoring wells are typically used to provide trend analysis of contaminant groundwater concentrations over an extended period of time. DPT can be used to install small-diameter (e.g., up to 2 inches outside diameter [OD]) monitoring wells.

Ideally, both DPT point-in-time and monitoring well groundwater sampling equipment should be used together to maximize their effectiveness. Point-in-time sampling techniques are generally better for identifying plume boundaries, hot spots, preferred pathways, or other monitoring points of interest. Once this information is collected, DPT monitoring wells, as well as conventional monitoring wells, can be optimally placed to provide project teams with the most useful monitoring data.

This section summarizes the various types of point-in-time sampling tools and DPT monitoring well installation techniques. Since DPT groundwater sampling methods are often used to their best advantage in combination with other specialized DPT measurement and logging tools, these associated tools are also discussed at the end of this section. This information is intended to provide the reader with an easily accessible summary of available

DPT tools. Other resources listed in the *Introduction* could also be used for a more comprehensive survey of available tools and their capabilities. Table 2.1 provides a list of some of the major DPT equipment available for groundwater investigations. It summarizes the capabilities of the equipment and helps the reader to sort through the variety of tools and how they may be useful for specific project goals. Because this section provides a basic overview of existing equipment, readers already familiar with the capabilities of DPT equipment may wish to proceed to Section 3 for information on how these tools can be used to collect groundwater samples to meet project objectives.

Point-in-Time Sampling

A variety of point-in-time groundwater sampling tools are available for site characterization, including:

- Sealed-screen sampling;
- Multi-level sampling (or vertical profiling); and
- Open-hole sampling.

With these techniques, the time needed to retrieve the sample will vary according to the hydraulic conductivity of the sampling zone. In general, sampling within coarse-grained sediments takes minutes while fine-grained sediments can take several hours or more. In situations where slow recharge inhibits the timely collection of groundwater samples, the sampler may be left in place to recharge while the DPT rig is moved to a new sampling location.

Sealed-Screen Samplers

Sealed-screen samplers typically consist of a short (e.g., 6-inch to 3-foot) screen nested within a sealed, water-tight tool body (Figure 2.1). Because the screen is not exposed to the formation as the sampler is advanced into the subsurface, the screen does not become plugged or damaged. In addition, the potential for cross contamination is greatly reduced and a true depth-discrete sample that is representative of the target sampling zone can be collected. The sample volume collected with some sealed-screen samplers is limited by the volume of the sample chamber (e.g., 500 mL for the Hydropunch I™; 1.2 L for the Hydropunch II™; and 35 to 120 mL for each vial in the BAT™).

To collect the sample, the sealed-screen sampler is advanced to the target sampling depth and the protective outer rod is retracted, exposing the screen to groundwater. Groundwater flows through the screen under the hydraulic head conditions that exist at that depth and into the drive rods or sample chamber. O-ring seals placed between the drive tip and the tool body help ensure that the sampler is water tight as it is driven to the target sampling interval. The integrity of the seal can often be checked by lowering an electronic water level indicator into the sampler prior to retracting the protective outer rod.

Table 2.1
Comparison of Various Direct Push Technology Sampling and Data Collection Capabilities

EQUIPMENT	CAPABILITIES											
	Evaluate Strati-graphy	Measure Pore Pressure	Measure Soil Conduc-tivity	Detect Hydrocarbon	Detect VOC	Sample Soil	Sample Soil Gas	Sample Ground-water	Sample Pore Water	Evaluate Vadose Zone	Measure Water Level	Install Small Diameter Wells
Sealed-Screen Samplers												
BAT GMS								✓	✓			
BAT Enviroprobe							✓	✓				
Dual-Tube Samplers	✓					✓	✓	✓		✓	✓	✓
HydroPunch I and II™								✓				
PowerPunch™										✓	✓	✓
Screen Point 15								✓			✓	
SimulProbe®						✓	✓	✓				
Multi-Level Samplers												
Geoprobe	✓		✓		✓	✓	✓	✓		✓	✓	✓
Envirocore	✓					✓	✓	✓		✓	✓	✓
Vertek ConeSipper®	✓	✓	✓				✓	✓		✓	✓	
Waterloo Profiler							✓	✓		✓	✓	
Specialized Measurement and Logging Tools												
Cone Penetrometer	✓	✓	✓			✓	✓	✓		✓	✓	✓
Instrumented CPTs	✓	✓	✓	✓	✓	✓						

Figure 2-1
Sealed-Screen Sampler

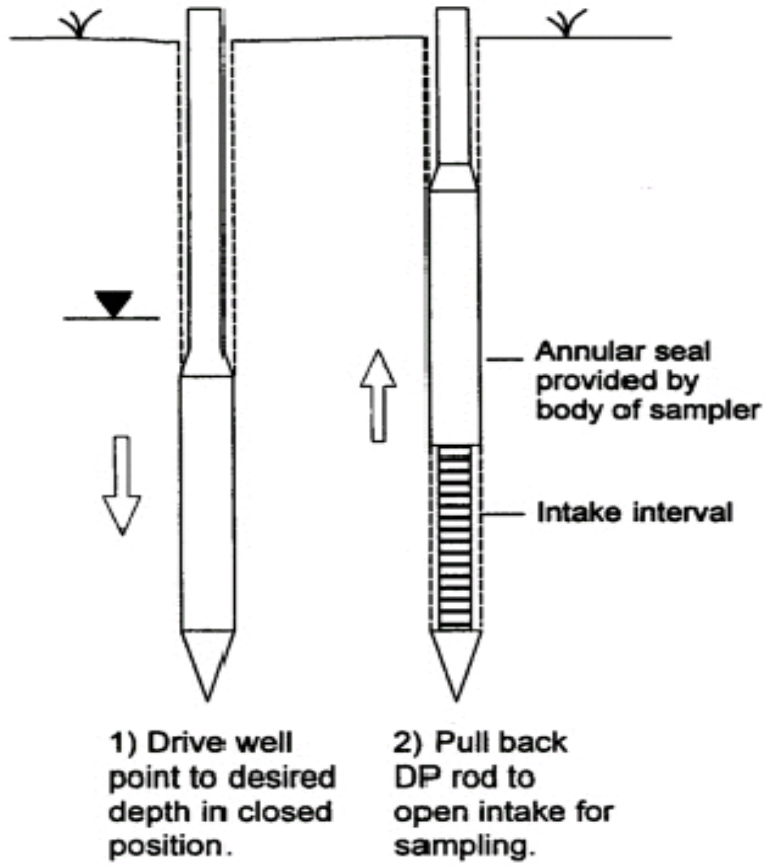

Source: Cordry, 1995[1]

Sampling fine-grained formations may be difficult because of the long time it takes to fill the sampler with groundwater. Sample collection times in formations with low hydraulic conductivity may exceed several hours for some tools, compared to several minutes or tens of minutes in formations of high to moderate hydraulic conductivity (Zemo et al., 1994; Zemo et al., 1995). However, to avoid downtime, the samplers can be left in the borehole to recharge while the installing rig moves off the hole to another location to sample. To decrease sample collection time, samples can be collected from samplers with longer, 30- to 42-inch screens (e.g., Geoprobe® Screen Point 15) while the tool is downhole. A bailer or pump is needed to collect the sample from the target zone.

Sealed-screen samplers generally are limited to collecting one sample per advance of the sampler. However, depending upon the system used, multi-level sampling in a single borehole can be accomplished with sealed-screen samplers by retrieving the sampler and decontaminating it or replacing it with a clean sampler before reentering the hole to collect another sample.

Multi-Level Samplers

Multi-level samplers, most of which are exposed-screen samplers, are DPT equipment capable of collecting groundwater samples at multiple intervals as the sampling tool is advanced, without having to withdraw the tool for sample collection or decontamination. The terminal end of a typical multi-level sampling tool has a 6-inch- to 3-foot-long screen made up of fine-mesh, narrow slots, or small holes. The screen remains open to formation materials and water while the tool is advanced (Figure 2.2). This allows samples to be collected either continuously or periodically as the tool is advanced to vertically profile groundwater chemistry and aqueous-phase contaminant distribution.

Multi-level samplers can be used to measure water levels at discrete intervals within moderate- to high-yield formations to assist in defining vertical head distribution and gradient. Additionally, some of these tools can be used to conduct hydraulic tests at specific intervals to characterize the hydraulic conductivity in formation materials to identify possible preferential flow pathways and barriers to flow (Butler et al., 2000; and McCall et al., 2000).

A drawback to multi-level sampling is the possible drag-down by the screen of contamination from zones above the desired sampling interval (Figure 2.3) (Pitkin et al., 1999). The Waterloo Profiler minimizes the potential for cross- contamination. It uses a 6-inch long, uniform diameter, stainless-steel sampling tool into which several inlets or sampling ports have been drilled and covered with fine-mesh screen. As the tool is advanced, distilled or deionized organic-free water is slowly pumped down tubing that runs inside the drive rod and leads to the sampling ports in the tool (Figure 2.4). The water keeps groundwater from entering the tool while it is advanced. A peristaltic pump is typically used for depths less than 25 feet; a double-valve pump can be used for sampling at greater depths.

After the first target interval is reached, the flow of the pump is reversed and the sampling tube is purged so water representative of the aquifer is obtained. After the sample is collected, the pump is reversed and distilled or deionized water is again pumped through the sampling ports. The tool is then advanced to the next target interval where the process is repeated (Figure 2.5).

Several field studies (Cherry, et al., 1992; Pitkin, et al., 1994; Pitkin, et al., 1999) have demonstrated that the Waterloo Profiler is capable of providing a very detailed view of contaminant plumes—particularly in complex stratified geological materials—without the effects of drag-down and the cross contamination of samples. However, because a peristaltic pump is typically used to collect samples when the sampling depth is less than 25 ft below ground surface (bgs), there may be a negative bias in samples collected for analysis of VOCs or dissolved gases. To avoid this potential bias, VOC samples should be collected in-line, ahead of the pump, and a sufficient volume of water should be pumped through the system to account for the initial filling of the containers when a negative head space was present.

Another multi-level sampler, the VERTEK ConeSipper®, attaches directly behind a standard cone penetrometer to collect groundwater as the cone penetrometer testing (CPT) is advanced. An inert gas flows to the ConeSipper® to control the rate of sample collection and to purge and decontaminate the device down hole. The ConeSipper® is equipped with two filters, which help minimize turbidity in the samples. The primary filter is a stainless steel screen whose openings can range in size from 51 to 254 µm. A secondary filter, which can be made from sintered stainless steel and comes with opening sizes ranging from 40 to 100 µm or regular

Figure 2.2
Exposed-Screen Sampler–Well Point Driven below the Base of a Borehole

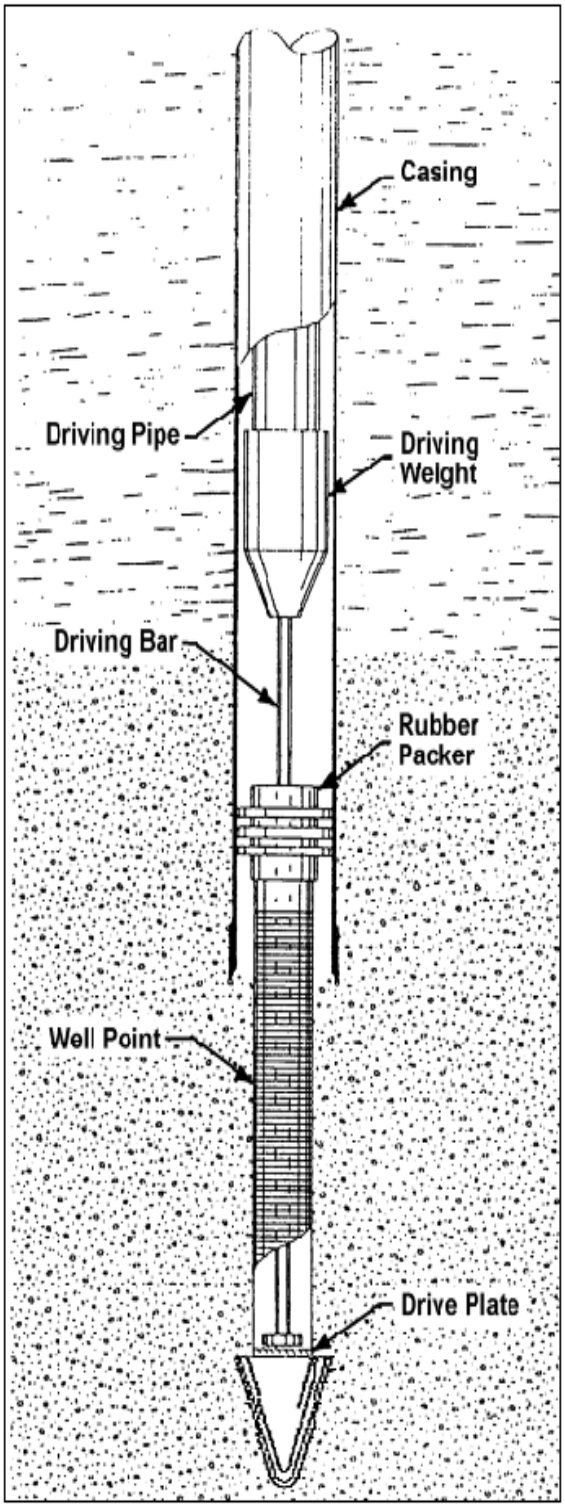

Source: ASTM (2001e)

Figure 2.3
Schematic Illustration of Degrees of Drag Down Potentially Induced by Direct Push Sampling Devices

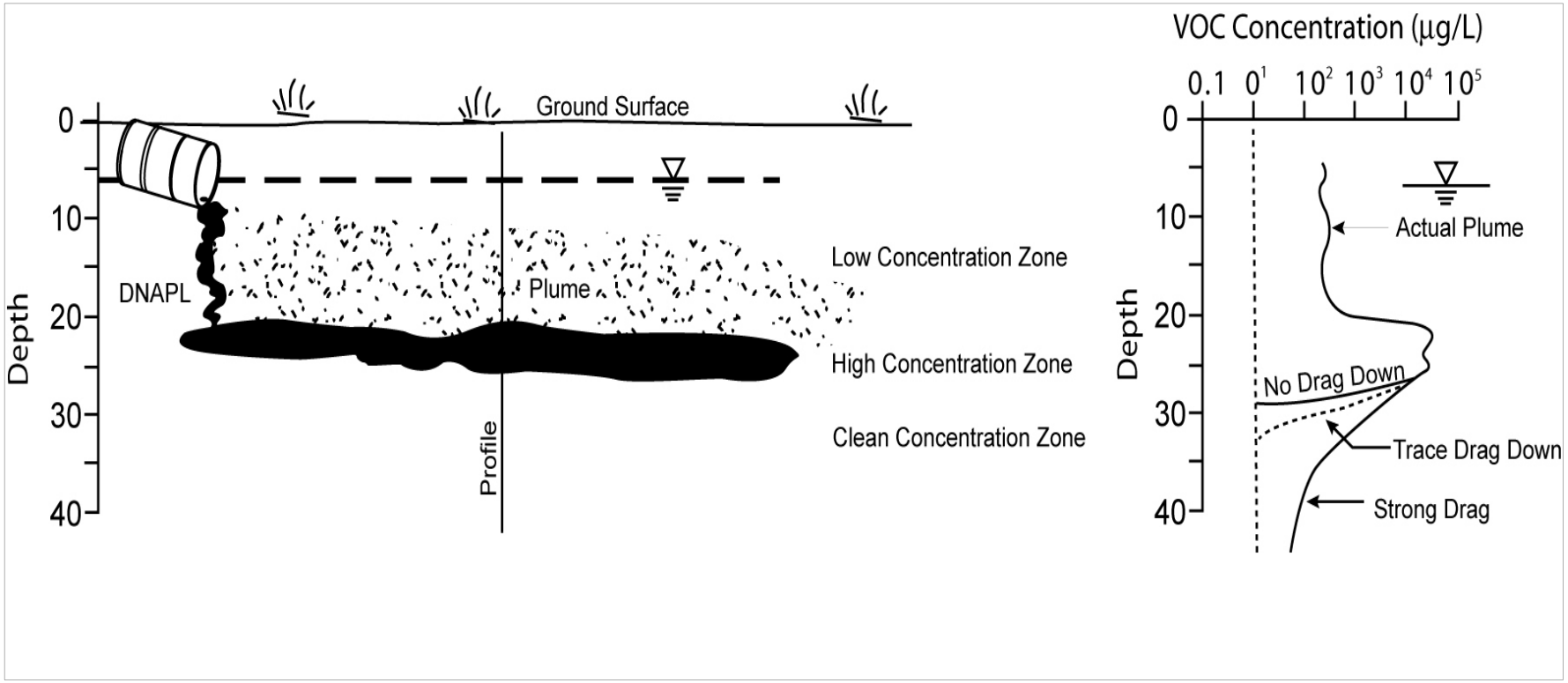

Figure 2.4
Operation of the Waterloo Profiler

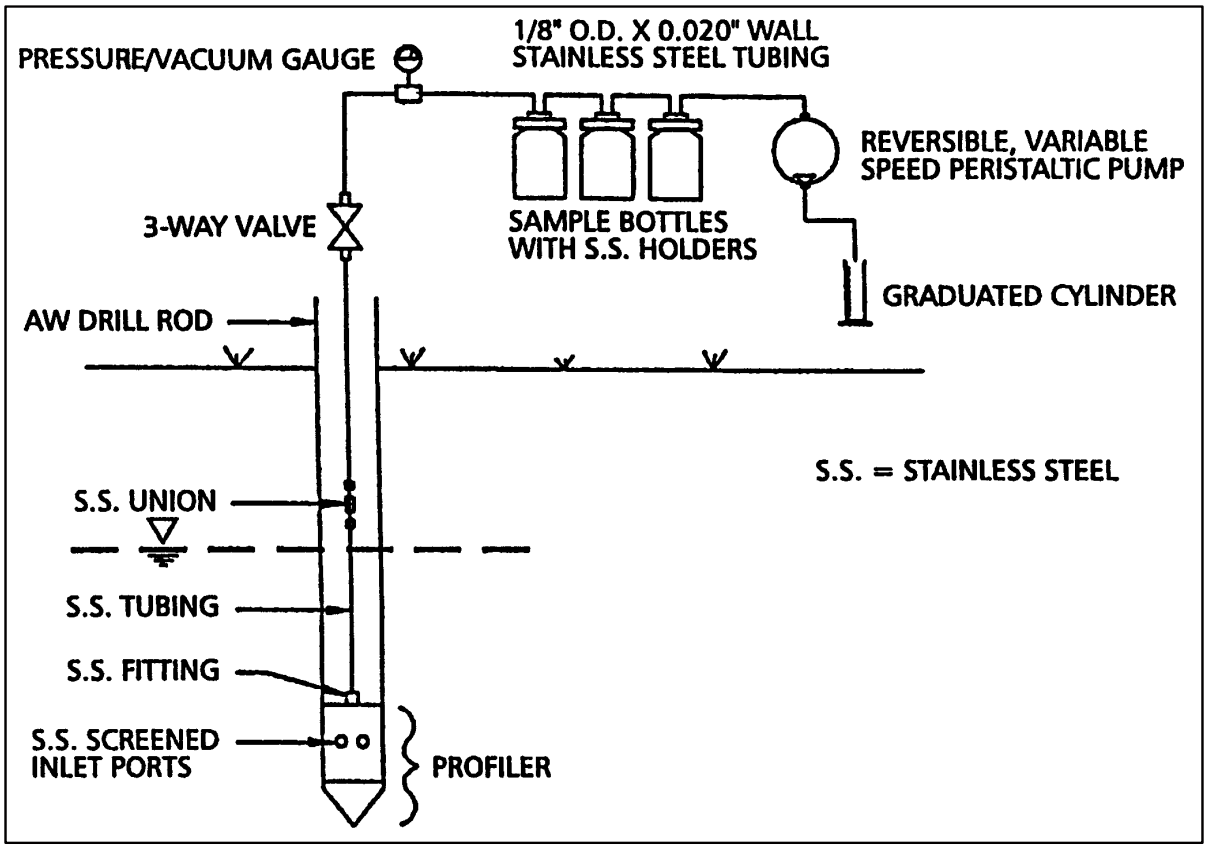

Source: Pitkin et al. (1999)

stainless steel with openings ranging in size from 38 to 74 µm, removes fines (Applied Research Associates, 2004).

Open-Hole Sampling Methods

Open-hole sampling is conducted by advancing drive rods with a drive point to the desired sampling depth. Upon reaching the sampling depth, the rods are withdrawn slightly which separates them from the drive tip and allow water to enter the rods. The water can be sampled by lowering a bailer into the rods or by pumping. The open-hole method is only feasible within formations that are fairly cohesive, otherwise the formation may flow upwards into the rods when they are withdrawn, preventing samples from being collected.

With single-rod systems, open-hole sampling can only be conducted at one depth within a borehole because the borehole cannot be flushed out between sampling intervals and cross-contamination may occur. Dual-tube systems, on the other hand, can be used to conduct multi-level sampling.

Figure 2.5
Collecting Samples From Discrete Depths (Profiling) Using the Waterloo Drive-Point Profiler

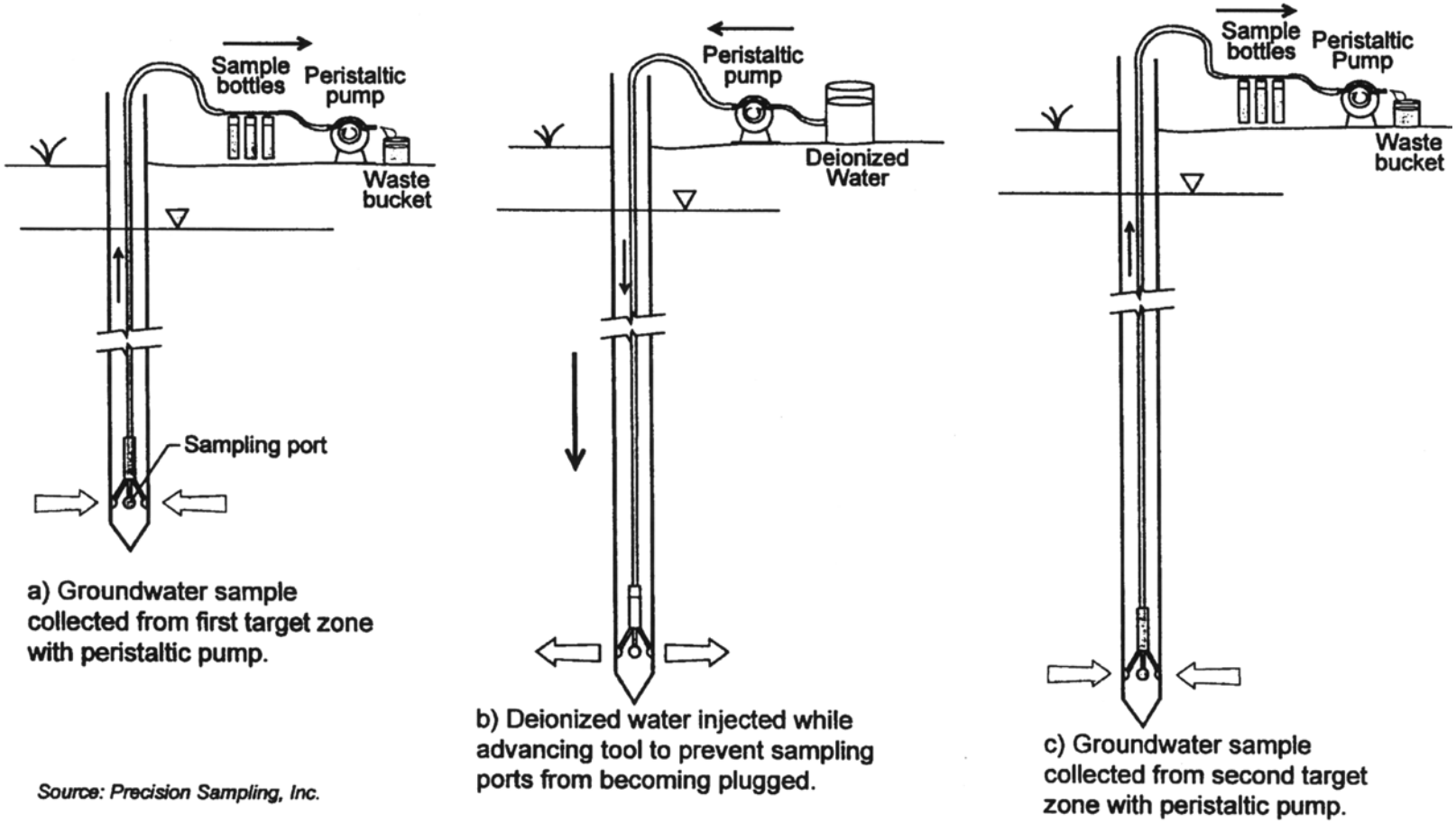

Source: Precision Sampling, Inc.

Dual-tube samplers are typically advanced into the subsurface to collect continuous soil cores; however, groundwater samples can be collected at the end of each core run. Dual-tube samplers have an outer casing that is driven to the target soil coring depth. The outer casing holds the hole open and seals off the surrounding formation as an inner rod (with a sample liner for soil sampling) is lowered into the outer casing and both are driven into the undisturbed formation below. Once the soil core is retrieved, groundwater can be sampled by lowering a bailer or pump into the outer casing The borehole can continue to be advanced so that multiple groundwater samples can be retrieved from multiple depths in the same borehole. The water should be purged from the casing with subsequent advances of casing and inner rod so that groundwater from overlying intervals do not cross-contaminate the sample.

The amount of water that needs to be purged depends upon the type of sampling equipment that is used. For pumping systems, purging procedures similar to those designed for wells (low-flow purging) and described in Section 4, should be used. If bailers are used, then it is important that all the water contained in the outer casing be removed to ensure that the water the bailer is passing through comes from the interval of interest. The accepted procedure for traditionally completed wells when bailers are used is to remove at least three volumes of water and measure water quality indicators (e.g., pH, specific conductance) until they stabilize. The use of a bailer in this situation may preclude the collection of some parameters that may be sensitive to the iron in the outer casing (See Low-flow Purging Section 4.)

A dual-tube profiling system has been developed so that a simple screen can be inserted through the cutting shoe of a dual-tube soil sampling device (Figure 2.6). This system enables the operator to collect soil samples and then insert a screen at selected intervals, which they can then use for sampling or conducting slug tests to locate preferential migration pathways (Butler et al., 2000; McCall et al., 2000). This system also allows for bottom-up grouting to assure proper boring abandonment.

DPT Monitoring Well Installation

A variety of DPT methods are available for installing temporary or permanent monitoring wells. The two main installation methods used are exposed-screen and protected-screen wells. These methods are discussed in detail in ASTM D-6724 and D-6725 (ASTM, 2003a and 2003b) and are summarized here. As with conventional well installations, hydraulic connections should not be created between otherwise isolated water-bearing strata. In addition, precautions should be taken to minimize turbidity during the installation of filter packs and the development and sampling of wells (Section 4).

Exposed-Screen Well Installation Methods

With exposed-screen well installation methods, the well casing and screen are driven to the target depth using a single string of rods. Because the screen is exposed to formation materials while it is advanced, proper well development (as discussed in Section 4) is important to remove soil from screen slots. This method is not recommended for installing well screens within or beneath contaminated zones because drag-down of contaminants with the screen may cross-contaminate sampling zones and make acquisition of samples representative of the target zone impossible. Exposed-screen well installation methods should only be used in upgradient

Figure 2.6
Schematic of the Geoprobe® DT21 Profiler

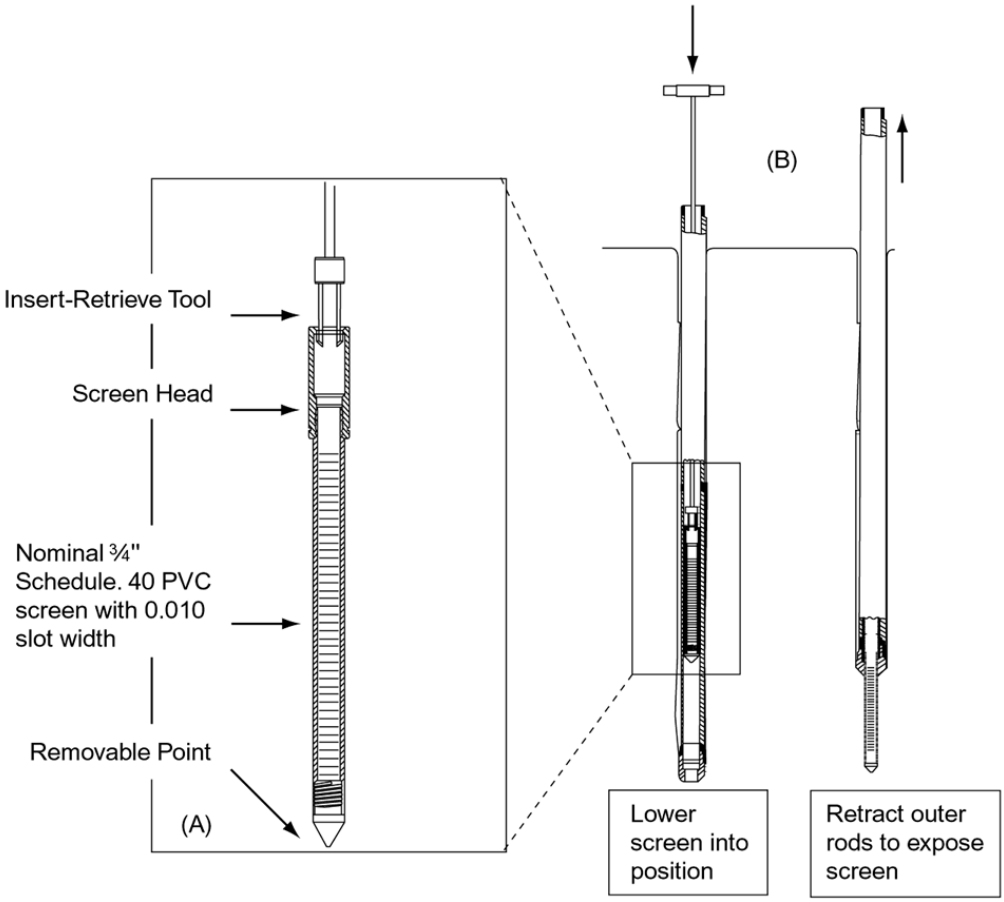

A) Screen components for insertion through the dual-tube system for slug testing and sampling.
B) The profiling screen is lowered through the outer rods after the inner rods are removed. Once the screen is at the base of the outer rods, they are retracted as the screen is held in position for accurate placement.

Source: www.geoprobe.com

---

areas that are known to be uncontaminated. Also, some states prohibit allowing the formation to collapse around a well screen in the construction of a monitoring well**.** Therefore, state regulations should be consulted before selecting exposed-screen techniques.

In one type of exposed-screen installation, the PVC well screen and casing are assembled and placed around a shaft of a drive rod connected to a metal drive tip. The casing and screen, which rest on top of the drive tip, are advanced to the target depth by driving the rod to avoid placing pressure on the screen. The drive tip slightly enlarges the hole to reduce friction between the formation and the well screen and casing, and remains in the hole plugging the bottom of the screen. The filter pack surrounding the well screen commonly is derived from formation materials that are allowed to collapse around the screen. Rigorous well development

improves the hydraulic connection between the screen and the formation and generally is necessary to remove formation fines and the effects of well installation, which may include borehole smearing or the compaction of formation materials. Due to the very small annulus (if any) that surrounds a well constructed using the exposed-screen method, it is not generally possible to introduce a filter pack or annular seal from the surface.

Exposed-screen methods also can be used to install well points—simple wells used for rapid collection of water level data, groundwater samples, and hydraulic test data in shallow unconfined aquifers. Well points are generally constructed of slotted steel pipe or continuous-wrap, wire-wound, steel screens with a tapered tip on the bottom. They can be driven into unconsolidated formations and used for either point-in-time sampling and decommissioned after the sample is collected, or left in place for the duration of the sampling program—possibly requiring the installation of a seal to prevent infiltration of water from the ground surface to the screened interval.

The optimum conditions for well point installations are shallow sandy materials. Predominantly fine-grained materials such as silt or clay can plug the screen slots as the well point is advanced. Because well points are driven directly into the ground with little or no annular space, the formation materials are allowed to collapse around the screen, and the well point needs to be developed to prepare it for sampling.

Protected-Screen Well Installation Methods

When installing a protected-screen well, the well casing and screen are either advanced within or lowered into a protective outer drive rod that has already been driven to the target depth. Once the well casing and screen are in place, the drive rod is removed. Alternatively, the casing, screen, and a retractable shield may be driven simultaneously to the target depth. Once in place, the screen is exposed and the entire unit remains in the ground. If there is sufficient clearance between the inside of the drive rod and the outside of the well casing and screen, a filter pack and annular seal may be installed by tremie from the surface as the drive casing is removed from the hole. Several filter packing and annular sealing approaches are available, depending on the equipment used for the installation (ASTM D5092 and D6725; ASTM, 2003b and 2003c). Regardless of the method of installation, the filter pack should be sized appropriately to retain most of the formation materials (refer to Driscoll, 1986 or ASTM D5092-02).

The most common protected-screen method for installing DPT wells is to advance an outer drive casing equipped with an expendable drive tip to the target depth. The well casing and screen are then assembled, lowered inside the drive casing, and anchored to the drive tip. The drive casing seals off the formations through which it has been advanced, protecting the well casing and screen from clogging and from passing through potentially contaminated intervals. The position and length of the screen should be selected to match the thickness of the monitoring zone, which can be determined by using additional information, such as CPT logs or continuous soil boring logs.

When DPT wells are installed in non-cohesive, coarse-grained formations, the formation can be allowed to collapse around the screen (if this technique is not prohibited by state well installation regulations) after it is placed at the target depth since turbidity problems are unlikely. When turbidity is likely to pose a problem for groundwater sample quality (see Section 3), a

number of methods for installing filter packs are available. The filter pack can be poured or tremied into place as the drive casing is removed. Depending on the relative size of the drive casing and well, however, it may be difficult to introduce filter pack or annular seal materials downhole unless the hole is in a cohesive formation that will remain open as the drive casing is removed. Typical inside diameters of DPT wells range from 0.5-inch (schedule 80 PVC) to 2 inches (schedule 40 PVC), and the maximum inside diameter of drive casing is 3.5 inches. Table 2.2 provides a reference for understanding the relationship between inside diameters of DPT drive casing, the outside diameter of well casing and screen, and the annular space available for filter packs.

For the best control of filter pack placement and grain size, "sleeved" or "prepacked" well screens can be used (Figure 2.7). Pre-packed screens are generally composed of a rigid Type I PVC screen surrounded by a pre-sized filter pack. The filter pack is held in place by a stainless-steel wire mesh (for organic contaminants) or food-grade plastic mesh (for inorganic contaminants), such as polyethylene, that is anchored to the top and bottom of the screen. Sleeved screens consist of a stainless-steel wire mesh jacket filled with a pre-sized filter-pack material, which can be slipped over a PVC pipe base with slots of any size. Although sleeve thickness generally ranges from only 0.25 to 0.5 inch, it has been shown to provide an effective filter pack (Kram et al., 2000).

Table 2.2
Annular Space for Well Completion Based on Size of Well Casing and Screen

Inside Diameter of Well Casing and Screen (inches)	Outside Diameter of Well Casing and Screen (inches)	Annular Space with 1.5-inch Inside Diameter (1.8-inch OD) Drive Casing (inches)	Annular Space with 3-inch Inside Diameter (3.5-inch OD) Drive Casing (inches)
0.5	0.84	0.66	2.16
0.75	1.05	0.45	1.95
1	1.32	0.18	1.68
1.25	1.66	Not applicable	1.34

Figure 2.7
Photograph of Pre-Packed Well Screens

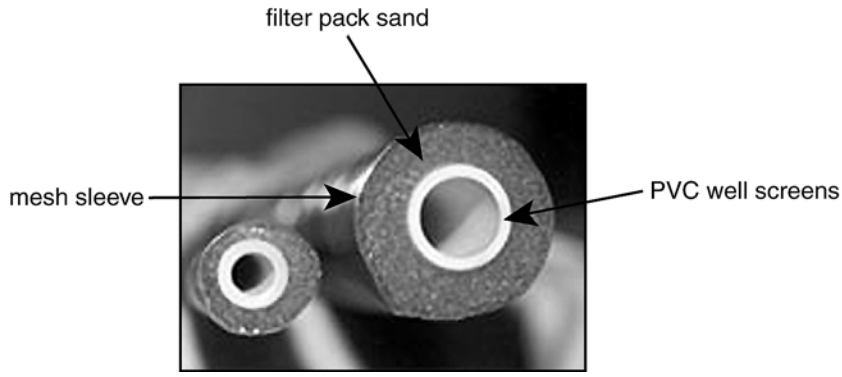

Courtesy Geoprobe® Systems, 1996.

Annular seals and grout should be placed above the filter pack to prevent infiltration of surface runoff and to maintain the hydraulic integrity of confining or semi-confining layers, where present. The sealing method used depends on the formation, the well installation method, and the regulatory requirements of state or local agencies. Most protected-screen installations tremie a high-solids (at least 20% solids) bentonite slurry or neat cement grout into place as the drive casing is removed from the hole. (Additional guidance on grout mixtures is available in ASTM D6725 (ASTM, 2003b).) A barrier of fine sand or granular or pelletized bentonite (where water is present) may be placed above the primary filter pack before grouting to protect it from grout infiltration, which could alter the water chemistry in the screened zone. Similar to the pre-packed and sleeved screens mentioned above, modular bentonite sleeves that attach to the well screens and are advanced with the well during installation are also available. As depicted in Figure 2.8, some manufacturers provide a foam seal that expands immediately when the casing is withdrawn to form a temporary seal above the screen[1]. A bentonite sleeve above the seal expands more slowly after the casing is withdrawn but forms a permanent seal once it hydrates.

To ensure a complete seal of the annular space from the top of the annular seal to the ground surface, the grout or slurry should be placed from the bottom up. By using a high pressure grout pump and nylon tremie tube (Figure 2.9) it is possible to perform bottom-up grouting in the small annular spaces of DPT equipment. Slurries of 20-30% bentonite or neat cement grout are most commonly used to meet state regulatory requirements.

A properly constructed DPT-installed monitoring well (Figure 2.10) can provide representative water quality samples and protect groundwater resources. A 1997 study (McCall et al., 1997) demonstrated that DPT wells installed in this manner beneath highly contaminated source zones consistently provided non-detect values. In addition, as with conventional wells, a properly constructed DPT well should have a flush-mount or above-ground well protection to prevent physical damage or tampering of the well. Small locking well plugs are also available for even 0.5-inch nominal PVC casing.

Specialized Measurement and Logging Tools

There are a number of specialized measurement and logging tools available that can be used with DPT equipment to optimize the number and location of groundwater samples. These tools can estimate geotechnical, geophysical, hydrogeologic, and analytical parameters in the subsurface. They are particularly useful when the subsurface is highly stratified or contains laterally discontinuous layers. In such situations, characterizing or monitoring a dissolved-phase plume may require identifying preferred groundwater flow pathways, such as zones of high hydraulic conductivity, for sampling. For example, if the presence of DNAPL is suspected, then possible locations where DNAPL has pooled should be targeted by mapping the surface and areal

[1]The foam bridge is constructed of a polyethylene cover over polyurethane foam. In choosing to use this device, it should be kept in mind that polyethylene is permeable to many dissolved organic constituents and polyurethane foam will bind organic constituents that come in contact with it. Whether this will affect the quality of the sample is not known. However, purging the well should take care of any potential problems.

Figure 2.8
Small Diameter DPT Well Components

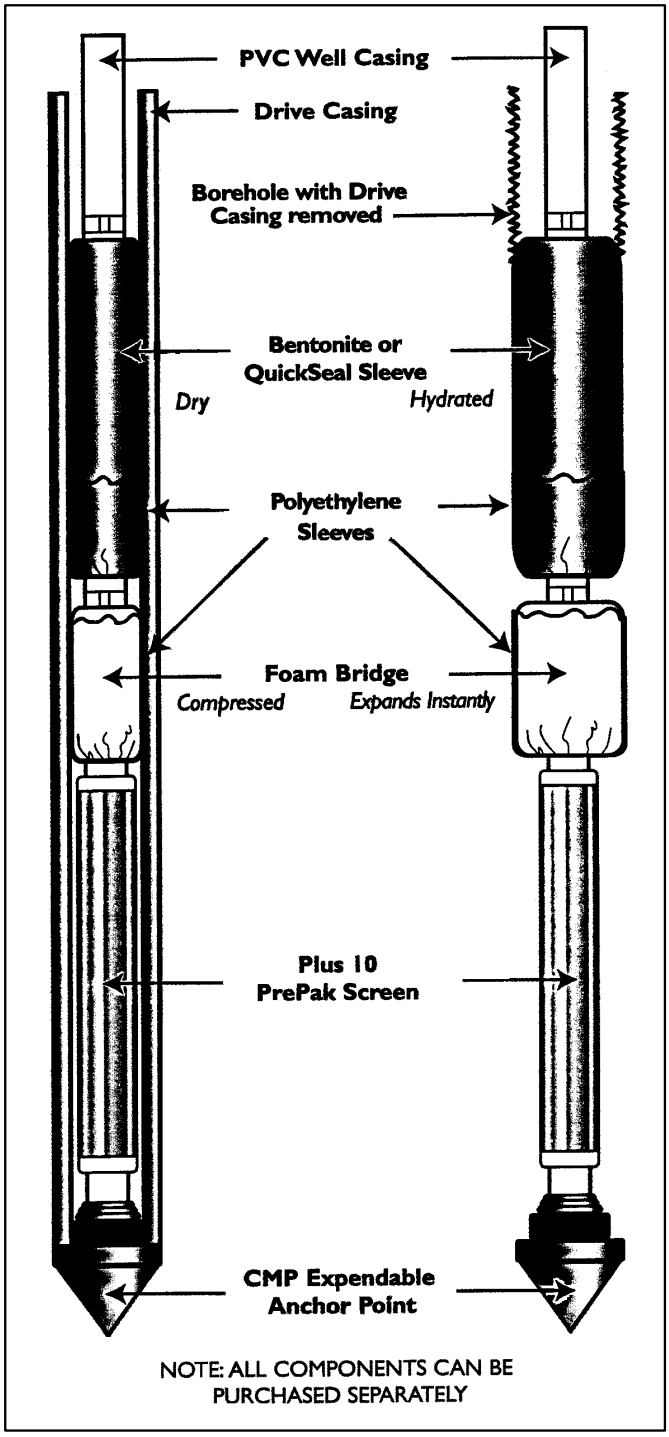

Source: GeoInsight Inc. product literature

Figure 2.9
Bottom-Up Method for Grouting Small Annular Spaces of DPT Wells

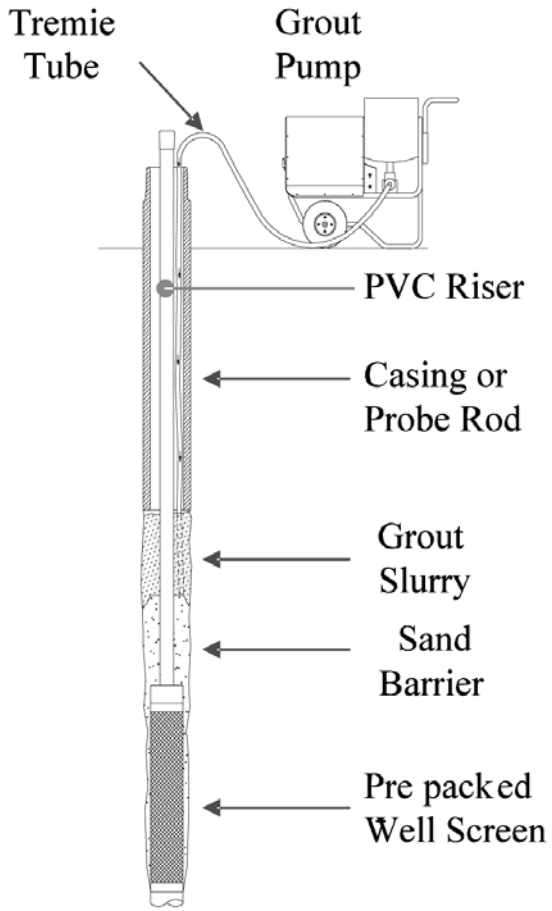

Adapted from Geoprobe®, 1996.

extent of an aquitard. The following section describes some of the specialized measurement and logging tools that are currently available. Since new tools are continually being developed, the list provided in this guide should not be considered complete and is directed at tools specifically concerned with groundwater quality.

Geotechnical

The most common type of DPT geotechnical measurements are conducted with a three-channel cone as part of a CPT rig. It simultaneously measures the tip resistance, sleeve resistance, and inclination of the cone. The ratio of sleeve resistance and tip resistance is used to interpret the soil behavior types encountered (Chiang et al., 1992). In general, sandy soils have high tip resistance and low sleeve resistance, whereas clayey soils have low tip resistance and higher sleeve resistance. The data are recorded in real time on a computer at the ground surface and compiled to generate logs that show soil behavior type and relative density with depth. Actual soil samples are needed to correlate CPT soil behavior data to site soil types.

Figure 2.10
Example of a Properly Constructed DPT Well Installation with Prepacked Well Screen

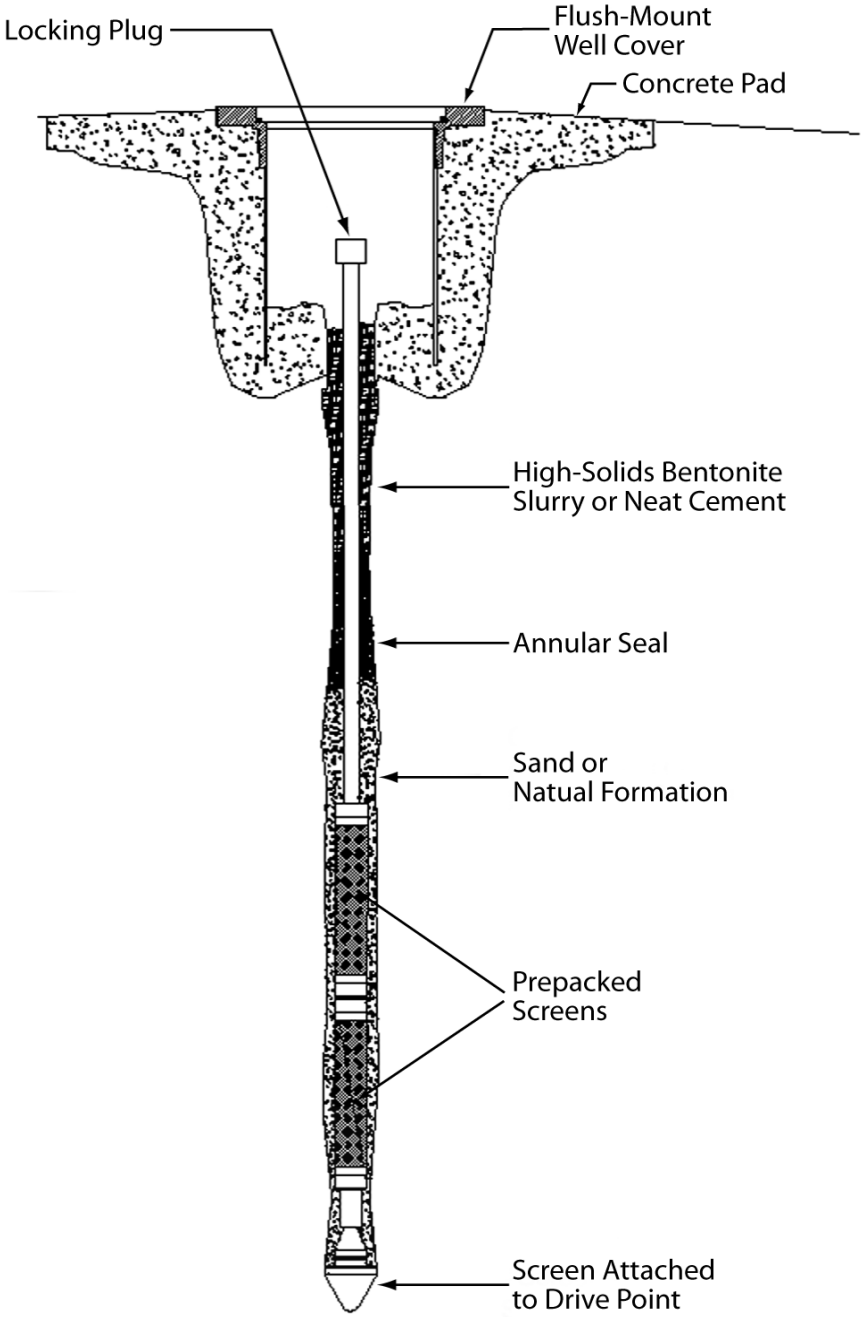

Adapted from Geoprobe®, 1996.

Geophysical

A number of geophysical measurements can be collected with probes or cones attached to direct push rods. The most common equipment is a conductivity probe that measures the bulk conductivity (or resistivity) of the adjacent soil as it is advanced. The differences in conductivity can be related to changes in stratigraphy. Although actual soil logs are important to correlate probe readings with actual site conditions, in general, finer-grained sediments (e.g., mineral clays) are more conductive than coarser sediments (e.g., sands, gravels). Conductivity probes are also affected by soil water content and ionic strength so they can be used to locate contaminant plumes that have a different salt content than naturally occurring water/soils. In addition, these instruments can sometimes be used for detecting DNAPL masses, which have low conductivities, when there is a sufficiently large conductivity difference between the DNAPL and the surrounding soil matrix. Although these probes will detect LNAPLs as well, there are generally simpler and more reliable ways of locating them than using conductivity probes. Electrical resistivity can also be measured with probes and cones to obtain similar information.

Hydrogeologic

CPT rigs can be equipped with piezocones that measure dynamic pore water pressure as the tool is advanced through the soil layers. The pore water pressure data can be used to determine the depth to the water table and the relative permeability of the layers. Advancement of the penetrometer can be paused at selected intervals to run dissipation tests to obtain estimates of hydraulic conductivity. The combined results of the CPT and piezocone tests can help identify potential preferential contaminant transport pathways in the subsurface. These pathways are especially useful for targeting groundwater sampling locations. Using point-in-time DPT sampling to identify which of these pathways are contaminated can further define optimum intervals for monitoring well screens.

Analytical

There are a number of probes that can be attached to DPT rigs to detect contaminants in the subsurface. These include induced fluorescence systems and volatilization and removal systems.

Induced Fluorescence Systems

Two widely available systems used with CPT rigs are the Site Characterization Analysis Penetrometer System, or SCAPS, and the Rapid Optical Screening Tool, or ROST™. Both use a CPT-deployed laser-induced fluorescence (LIF) probe to qualitatively identify the types and relative concentrations of petroleum hydrocarbons present. This is accomplished by transmitting ultraviolet (UV) light from a nitrogen laser through a sapphire window into the soil. The UV light causes polynuclear aromatic hydrocarbon (PAH) components to fluoresce, and the varying intensity of the fluorescence is indicative of the amounts of the PAHs present. The spectrum of the fluorescence describes the distribution of PAHs present in the hydrocarbon (or often contaminant mass), which can be used for rough fingerprinting of the type of hydrocarbon (Knowles, 1995).

Another induced fluorescence technology, sometimes referred to as a fuel fluorescence detector (FFD), is very similar to LIF except that it generally uses a mercury lamp as its light source, and the light is located in the probe at the sapphire window. This lamp provides a continuous source of light rather than the pulsed technique of the LIF. Although downhole detectors are available, fluorescence intensities from the soil are generally returned to the surface for measurement via fiber optic cable. It generally reads total fluorescence. Some vendors have filtering capabilities to limit wavelength reception to their detectors that allows some differentiation between contaminant types.

Volatilization and Removal Systems

There are two established systems for analysis of VOCs by volatilizing the contaminants in the subsurface and transporting them with a carrier gas to the surface for analysis. The membrane interface probe (MIP), used with percussion or hydraulic driven DPT rigs, heats the surrounding soil to promote diffusion of VOCs through a permeable membrane. Once VOCs enter the probe, they are transported to the surface to a detector (e.g., a photoionization detector or flame ionization detector) with a carrier gas. The probe is generally driven at a rate of one foot per minute to maintain operating temperatures. The presence or absence of VOCs and their relative distribution among sampling locations can be estimated. If more chemical specific information is needed, the MIP can be used in combination with a direct sampling ion trap mass spectrometer (DSITMS). Since this instrument does not have a separation column in front of it, it may not be able to differentiate between chemicals having the same major ion signature.

The SCAPS Hydrosparge™ can be used with either CPT or percussion rigs and is equipped with a module that is lowered into a sealed-screen sampler once the drive rods are retracted to expose the screen. The module uses helium gas at a calibrated flow rate to purge VOCs from the groundwater and transfer them via a Teflon tube directly into a detector at the surface for real time analysis. One sample per location can be analyzed. To collect additional samples at other depths, the sealed-screen sampler can be re-advanced at other locations adjacent to the sampled hole. Data from the hydrosparge is semi-quantitative because of uncertainty associated with sample volume measured.

This page is intentionally blank.

Section 3: Data Quality Objectives for Groundwater Sampling

Before selecting an approach to collecting environmental samples, EPA requires that EPA-funded projects use a systematic planning process to plan the collection of project data (EPA, 2000). To help planners select the best methods for obtaining data of the appropriate type, quality, and quantity for their intended use, EPA has developed a seven-step recommended data quality objective (DQO) process. DQOs are designed to provide qualitative and quantitative statements that clarify study objectives, define the appropriate type of data, and specify tolerable levels of potential decision errors that can be used as the basis for establishing the quality and quantity of data needed to support decisions. Because DQOs are intended to be project specific, they should be developed as part of the process for determining the goals for their activity. For some groundwater investigations, a DQO may be needed that describes the type of samples needed to characterize a groundwater plume; or a DQO may be needed to describe the type of samples required to establish that contamination is no longer a threat to drinking water. Although these DQOs may demand very different types of activities, the factors that should be evaluated for DPT groundwater sampling projects typically include:

- Determining the potential direction and degree of sampling bias;
- Evaluating whether the sample volume is sufficient for the selected analytical methods; and
- Minimizing the potential for contamination drag-down or creating a conduit for contaminant transport.

These factors are often issues for both DPT and conventional methods. Techniques exist for resolving problems for both methods, however, this section summarizes how they apply to DPT groundwater collection techniques.

Sample Bias

Sample bias generally is the systematic or persistent distortion of a measurement process that causes errors in one direction. In other words, sample measurements can be consistently different than the samples' true values. There are several potential sources of sample bias when sampling groundwater with any method, including DPT, but one of the most critical factors typically is the type of sampling equipment used to retrieve the sample (Nielsen and Yeates, 1985). Three of the most common sources of bias, due to sampling equipment and methods, include:

- Sample turbidity;
- Sample disturbance; and
- Sampling interval.

Sample turbidity can cause bias as a result of the adsorption of chemicals onto, or the release of chemicals from, the surface of particles in the sample. There also are several sources of bias that can result from sample disturbance. These sources are summarized in Table 3.1. Because sampling interval can have an impact on all analytes in a similar way, (i.e., errors do not necessarily result in one direction), it is not included in the table. The table helps to clarify what factors may have significant impacts on specific analytes and which would have little or no impact by indicating the direction of bias ("P" for positive bias and "N" for negative bias)

Table 3.1
Potential Impacts of Sources of Bias on Specific Analytes During Sampling

Analyte	Potential Source of Bias							
	Sample Disturbance						Turbidity	
	Pressure Decreases	Temperature Increases	Exposure to Atmospheric Conditions	Adsorption onto Sampler Materials (Plastics & Metals)	Desorption from Sampler Materials	Agitation/ Aeration During Sample Collection	Adsorption onto Particles (a)	Releases from Particles (a)
VOCs	N+++	N+++	N+++/P+++ (b)	N+	P+	N++	0	0
Dissolved Gases & ORP	N+++	N+++	N+++/P+++ (b)	N++ to N+++ (c)	P+	N++	0	0
Semi-Volatiles	N+	N++	N++	N+	P++	N+	N++	P++
Pesticides	N+	N+	N+	N+	0	N+	N++	P++
Trace Metals	N+	N+	N+++	N+ to N+++ (d)	P+	N+	N+++	P+++
Radionuclides	N+	N+	N+	N+	0	0	N+++	P++
Major Ions (Inorganic Anions & Cations)	0	0	N+	N+	0	0	N+	P+

Legend:

Bias Type:	Relative Degree of Impact:	
N = Negative	+	Weak
P = Positive	++	Moderate
0 = None	+++	Strong

(a) Adsorption to and release from particles is directly related to the level of turbidity and will also depend heavily on particle size and type. Adsorption is a greater factor when fine-grained, organic-rich particles are present.

(b) Depending on the analyte concentrations in the sample or the ambient atmosphere, concentrations in the sample may increase or decrease significantly.

(c) Reaction of the dissolved oxygen in groundwater with iron in the drive rods will significantly reduce measured dissolved oxygen and oxidation/reduction potential (ORP) due to oxidation of the zero valent iron under ambient conditions. Therefore, the sample must be isolated from steel drive rods to minimize this effect.

(d) Some trace metals can complex with hydrous iron oxides (rust) forming soluble ferrous iron. Therefore, the sample must be isolated from steel drive rods to minimize this effect.

and the degree of bias ("+" for weak, "++" for strong, and "+++" for very strong) when sampling for various analytes. For example, if investigators are interested in collecting groundwater samples for VOC analysis, they should be concerned about any changes in temperature or pressure of those samples because it would likely have a negative bias on results. However, if they were collecting the same samples for analysis of major, naturally occurring, inorganic anions and cations (e.g., Ca^{2+}, Na^{+}, K^{+}, SO_4^{2-}, CO_3^{2-}, NO^{3-}, Cl^{-}), they normally would not have to be concerned about pressure or temperature changes since they normally would not affect results.

The iron in steel drive rods of point-in-time samplers can have a significant affect on measured concentrations of analytes, such as dissolved oxygen, iron, and some trace metals as well as changing oxygen-reducing potentials. As discussed in Section 4, these affects can be minimized by placing the pump intake within the screened interval to be sampled and pumping at a low-flow rate to avoid drawdown of standing water in contact with the rods into the intake interval.

To minimize sampling bias, sampling equipment that meets project DQOs should be selected. For DPT, the primary difficulty in collecting groundwater samples typically is caused by the small inside diameter of many sampling points—generally 0.75-inch or less for the rods used with DPT sampling tools and 1 to 2 inches for DPT-installed wells. For DPT tools of these sizes, the available sampling devices are usually limited to less than 1-inch OD. For rods or well casing/screen with inside diameters less than 2 inches, sampling equipment usually is limited to bailers, inertial-lift pumps, suction-lift (e.g., peristaltic) pumps, gas-drive pumps, centrifugal pumps, and bladder pumps. For 2 inches and larger, additional devices available include gas-operated piston pumps and several designs of electric submersible pumps (e.g., gear-drive, helical rotor, or progressing cavity).

Bladder pumps (Pohlman et al., 1990; Unwin and Maltby, 1988; Parker, 1994; Barcelona et al., 1984), gear-drive electric submersible pumps (Imbrigiotta et al., 1988; Backhus et al., 1993), centrifugal pumps, and helical rotor pumps have consistently outperformed other pumps in their ability to deliver a representative sample for a wide variety of analytes under a wide range of field conditions. These devices are recommended for use in collecting samples for all classes of analytes. Each of the other devices has limitations that may affect the representativeness of samples for one or more classes of analytes (Nielsen and Yeates, 1985; Herzog et al., 1991; Parker, 1994; Pohlman et al., 1994; Pohlman and Hess, 1988; Pearsall and Eckhardt, 1897; Unwin and Maltby, 1988; Imbrigiotta et al., 1988; Pohlman et al., 1990). However, some of these devices may be appropriate for collecting samples for some sets of analytes.

A detailed discussion of the operational characteristics of sampling devices is provided in the Appendix. In addition, Table 3.2 provides a summary of some important operational characteristics related to DPT applications and the appropriateness of each device for sampling analyte classes. For example, the table shows that bailers are adequate for sampling narrow diameter wells when the analytes of concern are inorganic ions. If trace VOCs are being analyzed, bailers may not be as reliable for providing high quality samples as other methods. In addition, choosing a sampling tool is often related to the specific use the data acquired will be put. For example, bailers might be completely acceptable when sampling VOCs to locate a DNAPL source zone when the dissolved values in the water are very high and marginal losses are not important.

Table 3.2
Typical Operational Characteristics and Appropriateness of Groundwater Sampling Devices for Specific Analytes

Device	Approx. Minimum Well Diameter	Approx. Maximum Useful Depth to Groundwater	Approx. Minimum/ Maximum Sample Delivery Rate	Field Indicators				Inorganics			Organics		Radioactive		Biological
				SC	pH	ORP	DO	Major Ions	Trace Metals	Salts	VOCs	SVOCs	Radio-nuclides	Gamma α/β	Coliform
Bailer	½"	unlimited	highly variable	✓				✓		✓			✓		✓
Inertial-Lift Pump	½"	unlimited	highly variable	✓				✓		✓			✓		✓
Suction-Lift Pump (Peristaltic)	½"	25'	50 mL - 4 L/min	✓				✓		✓			✓		✓
Gas-Drive Pump*	½"	250'	50 mL - 20 L/min	✓	✓			✓	✓	✓		✓	✓	✓	✓
Bladder Pump	½"	300'	25 mL - 8 L/min	✓	✓	✓	✓	✓	✓	✓	✓	✓	✓	✓	✓
Piston Pump	2"	1000'	100 mL - 8 L/min	✓	✓			✓	✓	✓		✓	✓	✓	✓
Electric Submersible Pumps:															
Gear-Drive	2"	300'	50 mL - 12 L/min	✓	✓	✓	✓	✓	✓	✓	✓	✓	✓	✓	✓
Helical Rotor	2"	180'	100 mL - 6 L/min	✓	✓	✓	✓	✓	✓	✓	✓	✓	✓	✓	✓
Centrifugal	1.75"	220'	100 mL - 34 L/min	✓	✓	✓	✓	✓	✓	✓	✓	✓	✓	✓	✓

✓ = Device compatible with analyte

* Presumes use of inert drive gas

Abbreviations

SC - specific conductivity
ORP - oxidation/reduction potential
DO - dissolved oxygen
VOCs - volatile organic compounds
SVOCs - semivolatile organic compounds
α - alpha
β - beta

Sample Turbidity

In groundwater sampling, turbidity generally refers to the presence of suspended particles in the sample. These particles may be entrained in the groundwater when the subsurface is disturbed, such as when a DPT sampling tool or well is advanced and installed. The disturbance may cause some compaction and disaggregation of granular material as well as the breakage of grain coatings and cementing agents. The largest particles (i.e., silts) typically will settle out quickly but much can remain suspended in the water column. Depending on their type and size, some particles are neutrally buoyant, remaining suspended once they have become suspended. Turbidity can also be generated during sampling activities due to the relatively high entrance velocity of groundwater into the well when water is withdrawn by sampling tools, such as high-speed submersible pumps, or sealed-screen samplers when the screen is opened to the formation.

Although turbidity can be present in samples from sand and gravel formations, it particularly can be a problem when sampling in fine-grained formations. High turbidity also can be associated with the DPT sampling tools that lack screens or filter packs to keep the fines from entering the sampling tool or well. Conventional wells can also produce samples with high turbidity, especially if the slot size of the screen or the grain size of the filter pack are incorrectly sized for the formation.

The term “artifactual turbidity” is sometimes used to distinguish particles stirred up during drilling and sampling, which would not be mobile under ambient groundwater flow conditions, from those particles that are mobile under ambient conditions—colloids. Colloids are typically clays, hydroxyls, and humic materials that are 1 to 1000 µm in diameter. Although colloidal transport may be considered important in formations made up of materials coarser than fine sand (Dragun, 1988; Mason, 1991), under most ambient conditions, colloids are immobile in the subsurface. Because most turbidity is artifactual in origin, for the purpose of this discussion it is just referred to as “turbidity”.

Sample turbidity can be important because it can be a common source of significant bias, both negative and positive, in groundwater samples, particularly when metals and semi-volatile organic compounds (SVOCs) are the analytes of concern (see Table 3.1). For example, some clay colloids can artificially increase the measured concentration of dissolved metals because metals are found in their structure (e.g., aluminum, magnesium, and iron) and as similarly sized impurities associated with them. The surficial negative charge of the colloids and impurities attracts and loosely typically binds the positively charged metal cations in groundwater. The risk of positive bias can be further increased when acid is used to preserve a sample because it will cause the metals to dissolve back into the sample. On the other hand, if the dissolved metals bind to the colloids, and the sample is then filtered to remove high turbidity levels, the concentration of dissolved metals in the groundwater may be significantly reduced and the sample normally would not be representative of actual conditions.

In a similar way, colloids can become a “source” or a “sink” for organic constituents. Although organic chemicals of concern generally do not occur naturally in clays, they can sorb to colloids and naturally occurring organic matter. The level of sorption that will occur depends on the individual chemical, whether it was in equilibrium with the suspended colloids before being collected, and the analytical preparation method used. If groundwater sampling creates or occurs under non-equilibrium conditions, then significant sorption may occur. In addition, if organic constituents in groundwater have bound to clays or humic acids in the subsurface,

causing them to become immobile, the sampling process can disturb these immobile constituents and cause them to become dissolved in the groundwater sample.

One method of determining whether the level of turbidity will significantly impact the concentration of an organic constituent by causing it to become bound to colloids is to examine the logarithm of the *n*-octanol/water partition coefficient (log K_{ow}) because the log K_{ow} is a measure of a compound's tendency to remain dissolved in water. The higher the K_{ow} value, the more likely the chemical is to partition from the water onto suspended organic particles. Table 3.3 contains the log K_{ow} of a number of common organic chemicals.

This information can also be used as a quality control check on groundwater sample results. In general, the compounds with the higher log K_{ow} levels are SVOCs. If the groundwater concentrations for these chemicals approach or exceed their solubility, then the measured concentrations may have been artificially inflated by turbidity and other sampling data should be evaluated (e.g., nephelometric turbidity units [NTU], a measure of turbidity, dissolved oxygen). Alternatively, turbidity may not be a source of bias in a sample if the constituents of concern are organic compounds with low log K_{ow} values (e.g., < 2.5). In this situation, other issues, such as stability of groundwater indicator parameters during sampling, may be more important in evaluating groundwater sample quality. A paper by Paul and Puls (1997) helps to illustrate the significance of these numbers. In the study, which included analysis of both laboratory and field samples spiked with kaolinite and sodium montmorillonite clays, the researchers demonstrated that TCE, *cis*-DCE, and vinyl chloride concentrations were statistically unaffected by turbidity levels. This group of chemicals has low log K_{ow} values (≤ 2.42). The report concluded that the presence of solids in the groundwater samples had little or no effect on the VOC concentrations evaluated in the study. Losses of VOC due to volatilization during the sampling process were thought to have a greater effect on concentrations. As a word of caution, however, matrix effects can affect the tendency of some compounds to sorb more than their low log K_{ow} values would indicate. This increased level of sorption generally occurs when the soil matrix contains a substantial amount of organic materials, which can range from humic and fulvic acids to organic debris (roots leaves) and peat. Site-specific factors, such as total organic carbon (TOC), should be considered when deciding to take measures to reduce turbidity in groundwater samples. High levels of TOC in groundwater samples can yield analytical results that indicate higher levels of dissolved VOCs than are actually present. These higher levels can drive a risk assessment, even though the VOCs are actually sorbed to particles and are immobile.

When turbidity is a concern for groundwater sampling, steps can be taken to minimize it, provided adequate quality control (QC) procedures, described in Section 4, are followed, such as installation of filter packs (also discussed in Section 2), developing the well, and using low-flow sampling. In addition, DPT methods that promote high turbidity levels, such as open-hole sampling or exposed-screen methods, should be avoided. A representative sample cannot be salvaged with filtering if inappropriate sampling techniques have already compromised the sample. If filtering is justified by a project's DQOs, proper filtering techniques should be used. For more information on filtering, readers should refer to *Ground-Water Sampling Guidelines for Superfund and RCRA Project Managers* (EPA, 2002).

Table 3.3
Log *n*-Octanol/Water Partition Coefficients (Log K_{ow}) of Common Organic Contaminants

Chemical	Log K_{ow} [a]	Chemical	Log K_{ow}
Acenaphthene	4.07	Ethylbenzene	3.13
Acetone	-0.24	Ethylene Glycol	-1.36
Aldrin	5.52	Fluoranthene	5.22
Anthracene	4.45	Fluorene	4.12
Arochlor 1221	2.8 estimated	Heptachlor	5.44
Arochlor 1242	5.58	Hexachlorobutadiene	4.78
Arochlor 1260	6.91	Indeno(1,2,3-cd)pyrene	7.7
Benzene	2.13	Lindane	3.7
Benzo(a)anthracene	5.61	Methoxychlor	4.3
Benzo(k)fluoranthene	6.85	Methyl Ethyl Ketone	0.29
Benzo(g,h,i)perylene	7.1	Methyl t-Butyl Ether	1.24
Benzo(a)pyrene	5.99	Naphthalene	3.59
Bis(2-ethylhexyl)phthalate	4.20, 5.11	Pentachlorophenol	5.01
Carbon Tetrachloride	2.83	Phenanthrene	4.468
Chlordane	6	Phenol	1.48
Chlorobenzene	2.84	Pyrene	5.18
Chloroform	1.97	Styrene	2.95
Chrysene	5.6	1,1,2,2-Tetrachloroethane	2.39
p, p-DDT	6.36	Tetrachloroethene (PCE)	3.4
Dibenz(a,h)anthracene	6.36	Toluene	2.73
Dibenzofuran	4.17	Toxaphene	3.3
1,1-Dichloroethane	1.79	1,1,1-Trichloroethane	2.49
1,2-Dichloroethane	1.48	1,1,2-Trichloroethane	2.07
cis-1,2-Dichloroethene	1.86	Trichloroethene	2.42
Dieldrin	5.16	Tetrahydrofuran1,4-Dioxane	-0.27
1,4-Dioxane	-0.27	Vinyl Chloride	0.6
Endrin	5.16	m-Xylene	3.2

[a] Log K_{ow} values taken from Howard et al., 1993a and 1993b and from Montgomery and Welkom, 1991.

Sample Disturbance

If groundwater samples are disturbed during the collection process (e.g., agitation, allowing sample temperature to increase, or creating a situation for sample materials to adsorb or desorb analytes) there is a risk of negative impacts on groundwater sample quality, beyond the issue of generating turbidity, because it may result in the:

- Volatilization of any VOCs that are present;
- Dissolution of dissolved gases; or
- Oxidation/reduction of metals.

Sampling methods should be carefully selected in order to minimize disturbance during sampling. As shown in Table 3.2, bladder pumps and to a lesser extent centrifugal pumps generally are the best equipment for all analytes when sampling rods or wells less than 2-inches in diameter and where high quality samples are needed. Research has shown that suction lift pumps (e.g., peristaltic pumps—see Appendix) cause a negative bias in VOC and dissolved gas measurements because of the negative pressure generated by the pumping action. When point-in-time sampling is conducted in situations where volatilization of VOCs is a concern, sealed-screen samplers, such as the BAT Enviroprobe™ or Hydropunch™, which maintain in-situ pressure conditions, should be considered.

Sampling Interval

The most appropriate sampling interval to use at a site should be determined because the location and length of a sampling interval can bias a sample. Short or long sampling screens can be used with both DPT and conventional monitoring wells; however, DPT point-in-time methods are generally more economical and better designed to target smaller sampling intervals than conventional wells. When selecting discrete sampling intervals (e.g., 6-inch interval), there is a risk of missing contaminants that may be migrating through sections of the aquifer that do not fall within the screened interval(s). When selecting long sampling intervals (e.g., 5 to 15 feet), there is a risk that a highly contaminated but discrete interval will be diluted by larger uncontaminated intervals.

To determine the most appropriate sampling interval, a number of sources of existing information should be evaluated and, if necessary, additional subsurface data collected. DPT equipment can provide many cost-effective and comprehensive methods for collecting subsurface data for this purpose, including continuous soil logs, detailed stratigraphic logs using specialized measurement and logging tools (e.g., cone penetrometer testing, membrane interface probe, induced fluorescence), multi-level discrete groundwater samples to create a vertical profile of contamination, and piezometric data over a wide area to determine groundwater flow direction (see U.S. EPA, 1997 for more details). Based on this information, as well as slug tests and/or aquifer tests to estimate hydraulic conductivity for specific stratigraphic zones, contaminant source locations can be estimated. At this point the appropriate sampling intervals can be selected, thereby minimizing the installation of extraneous and ineffective wells or the risk of missing or diluting important transport pathways.

Sample Volume

There are three sample volume issues that can be particularly relevant to collecting groundwater samples with DPT:

- Point-in-time methods can be extremely slow in fine-grained formations (e.g., several hours or more).
- Sample chamber volume of some sealed-screen, point-in-time samplers is quite small (e.g., less than one liter), which can make it difficult to collect the larger volumes needed for some types of analyses (e.g., SVOCs, PCBs/pesticides).
- Both DPT wells and point-in-time samplers often have a smaller diameter than their conventional well counterparts. The smaller volume of the DPT wells may require lower-flow purge rates to avoid significant drawdown during sampling.

Consequently, subsurface conditions and the required analytical suite should be considered when selecting a DPT method to sample groundwater. Depending on the site conditions and site DQOs, larger volume samplers or low-flow purge equipment capable of very low-flow rates (discussed in Section 4) may be needed, or a sampler can be left in place to recharge while other locations are sampled. If a sampler is left in place to recharge, sample quality can be compromised if the sample container is filled in increments collected over a period of time. This is a concern primarily when filling sample vials for volatile organic analysis, which need to be filled completely with one sampling effort. Otherwise, volatile compounds may partition into the headspace above the sample.

Sample Cross-Contamination

Any groundwater sampling method can cause cross-contamination that affects groundwater sample quality and/or long-term water quality in at least three ways:

- Causing contaminant drag-down;
- Creating hydraulic conduits; and
- Biasing samples from improperly decontaminated equipment.

In evaluating the potential for cross-contamination and developing a sampling plan, the site geology, the types of contaminants present, and the sampling methods and equipment used should be examined. For example, drilling a hole through an aquitard creates a potential conduit for contaminant migration. If DNAPLs are perched on top of the aquitard and precautions are not taken, they may migrate down the borehole and contaminate a previously uncontaminated aquifer.

Although cross-contamination can be a serious concern that may pose additional challenges when using DPT equipment, DPT methods also provide many strategies for minimizing or eliminating the risk of cross-contamination. Section 5 reviews these methods and additional resources that can provide specific details needed in the appropriate use of DPT equipment.

Selecting a DPT Groundwater Sampling Tool

DPT tools can be considered for a wide range of groundwater field applications, and they can meet project DQOs in a broad variety of cases. Sampling bias, sample volume, and cross-contamination are potential problems whether DPT or conventional monitoring wells are used. It is important to understand the limitations of equipment being used and how they relate to project needs. The first step in selecting equipment should be narrowing down the categories of appropriate tools. With DPT equipment, that can be done by deciding whether qualitative, semi-quantitative, or quantitative data are needed. Table 3.4 provides a summary of the applications of DPT tools, emphasizing the basic concept that the project objectives should be considered when selecting equipment and methods.

Table 3.4
Recommended DPT Groundwater Tools for Various Field Applications

General Field Application	Specialized Measurement and Logging Tools (a)	Point-in-Time Groundwater Sampler	DPT-Installed Monitoring Well
Presence of contamination (i.e., qualitative sampling goals)	✓	✓	
Approximation of contaminant zone/level (i.e., semi-quantitative sampling goals)	✓	✓	
Define specific contaminants and accurate concentrations (i.e., quantitative sampling goals)		✓	✓
Long-term monitoring			✓

(a) Includes induced fluorescence and volatilization and removal systems.

Section 4: Recommended Methods for Collecting Representative Groundwater Samples

Collecting groundwater samples that are representative of in-situ aquifer conditions generally is important in any groundwater investigation. One of the most important factors in meeting this goal, for many analytes, typically is to minimize turbidity. This is because particles from formation materials that are suspended in a sample, but are not normally suspended in groundwater, can provide a substrate for various analytes to adsorb or desorb. This process can create a positive or negative bias for analytical results. In addition, although the causes of turbidity and their solutions for both DPT and conventional groundwater sampling methods generally are similar, the relatively narrow rod diameters of DPT systems can create additional hurdles. This section focuses on the activities that can minimize turbidity, specifically for DPT systems.

As discussed in Section 3, turbidity can cause substantial bias, both negative and positive, when sampling metals and SVOCs, but typically is much less an issue when sampling VOCs. There are several precautions that can be taken to minimize turbidity in DPT groundwater samples. Important techniques to consider include:

- Installation of a filter pack;
- Well development; and
- Low-flow purging or passive sampling protocols.

Each of these techniques can be applied to monitoring wells installed with DPT, but not all are possible with point-in-time samplers. For example, filter packs normally cannot be installed when using point-in-time samplers. Furthermore, well development and low-flow/passive sampling protocols normally can only be used with those point-in-time samplers that provide access to the sample location from the surface (See Section 2). Usually, samplers that rely on a sealed sample chamber to retrieve groundwater cannot be developed, nor can low-flow or passive sampling protocols be followed. However, there are some samplers in this category that may work, such as one of the BAT™ system samplers, that sample water through a ceramic or polymer tip that acts as an in-situ filter to prevent turbidity. The decision to use a specific type of point-in-time sampler should be weighed against project DQOs.

Installation of a Filter Pack

As mentioned in Section 2, installing a filter pack in monitoring wells can be an important means of minimizing sample turbidity. However, its installation is not always possible or necessary, depending on project objectives. A common construction technique for DPT wells is to let the formation collapse around the screened interval, rather than installing a filter pack. In fact, this is the only option for exposed-screen well installations since there is no annular space between the drive rods and the borehole walls to accommodate a filter pack. Similarly, DPT point-in-time sampling techniques do not allow for the installation of filter packs due to the lack of annular space between the drive rods/sample tool and the formation. Wells installed using protected-screen methods, however, may have adequate annular space for a filter pack and should be selected where data quality objectives dictate. Please refer back to Section 2 for more

information on filter pack installation techniques, including the use of pre-packed and sleeved well screens.

Well Development

Wells should be developed after completing the installation and allowing sufficient time for the annular seal to completely set (typically two weeks, but not less than 48 hours). The purpose of well development or development of a point-in-time sampler generally is to repair borehole damage caused by advancement and installation procedures, such as the smearing of fine-grained particles along the borehole walls and the generation of turbidity. Development generally is designed to remove these particles to improve the hydraulic connection between the well and formation so that groundwater can enter more freely. Development also is designed to remove the groundwater impacted by well installation so that groundwater representative of ambient conditions can be sampled.

Like conventionally installed wells, DPT-installed monitoring wells should be developed. This process typically involves block surging and pumping or bailing groundwater until certain water quality parameters (e.g., pH, specific conductance, dissolved oxygen, redox potential, and temperature) have stabilized and turbidity has been removed or decreased as much as possible. Wells are surged by raising and lowering a surge block (any tool that is slightly smaller than the inside diameter of the well casing) within the screened interval to mechanically backwash the well screen. These activities help to dislodge particles smeared within the borehole and the particles clogging the screen so they can be removed. In-line turbidimeters can be used during development or purging procedures to judge turbidity levels and their potential impact on sample quality.

Due to the way some point-in-time samplers are constructed and used, they may not accommodate a pump or bailer for development. Those samplers that can accommodate a pump or bailer can be developed similar to the method described above for wells, although due to the generally smaller diameters of point-in-time samplers, smaller diameter surge blocks, pumps, and bailers usually will be needed. In general, if DQOs recommend development for groundwater samples to meet quality standards, then many point-in-time samplers may not be appropriate for the situation.

Low-Flow Purging and Sampling

Low-flow purging, also referred to as low-stress purging, low-impact purging, and minimal drawdown purging, is a method of preparing a well for sampling which, unlike traditional purging methods, does not require the removal of large volumes of water from the well. The term “low-flow” refers to the velocity at which groundwater moves through the pore spaces of the formation adjacent to the screen during pumping. It does not necessarily reflect the flow rate of the water discharged by the pump at the ground surface. The focus of low-flow purging and sampling is on collecting high-quality samples by minimizing the impact of pumping on well hydraulics and aquifer chemistry. Because the flow rate used for purging is, in many cases, the same as or only slightly higher than the flow rate used for sampling, the process

is a continuum and is referred to as "low-flow purging and sampling." Although minimizing the disturbance of sampling on the aquifer is important for all types of groundwater sampling devices, it can be particularly important for DPT point-in-time samplers and exposed screen wells because installation of a filter pack generally is not feasible with these tools.

Low-flow purging and sampling generally are appropriate for collecting groundwater samples in a wide variety of situations. It can be used to sample all categories of aqueous phase contaminants and naturally occurring analytes, including VOCs, SVOCs, trace metals and other inorganics, pesticides, PCBs, radionuclides, and microbiological constituents and often is particularly appropriate for situations where colloidal transport is an issue (i.e., radionuclides, metals, and hydrophobic compounds). However, low-flow methods generally are not applicable to the collection of NAPLs because they do not respond to the effects of pumping in the same manner as groundwater.

Theoretical and Research Basis for Low-Flow Purging and Sampling

Groundwater sampling research has demonstrated that water standing in a well casing for a protracted time is not representative of ambient groundwater quality (Gillham et al., 1985; Miller, 1982; Marsh and Lloyd, 1980; Barcelona and Helfrich, 1996). Hence, this water should not be collected as part of the sample for analysis. In addition, the water within the screened interval of nearly all wells generally is representative, provided that the well has been designed, installed, developed, and maintained properly and the aquifer has a sufficient flow rate to ensure the water in the screened interval is being replaced.

Based on these findings, recommended low-flow sampling protocols have been developed so that groundwater can be collected from the screened interval without significant mixing with the water standing in the casing. Research has shown that this method does indeed provide high quality, representative groundwater samples (Backhus et al., 1993; Bangsund et al., 1994; Barcelona et al., 1994; Karklins, 1996; Kearl et al., 1994; Kearl et al., 1992; McCarthy and Shevenell, 1998; Puls and Paul, 1995; Puls and Barcelona, 1996; Puls and Barcelona, 1989; Puls and Powell, 1992; Puls et al., 1992; Puls et al., 1991; Serlin and Kaplan, 1996; Shanklin et al., 1995).

Because they are sampled almost immediately, point-in-time DPT tools should not develop a stagnant water column that will affect most analytical results. However, a standing water column for even a short period of time can affect some inorganic analytes (e.g., iron, nitrogen, and hexavalent chromium) and sensitive geochemical parameters (e.g., dissolved oxygen, oxygen reducing potential, and pH) if the water is in contact with steel drive rods. The zero valent iron in the rods can quickly react with any dissolved oxygen in the groundwater causing alteration of the analytes and parameters and potentially complexing with metal analytes. As a result, water being collected should be isolated from contact with the drive rods when sampling for these analytes or parameters. Placing the pump intake within the screened interval and pumping at a low-flow rate to avoid drawdown of water in contact with the drive rods should help isolate the sample from the rods. Although there is little concern about the water column affecting organic analytes when sampling with point-in-time DPT samplers, when

turbidity is a concern, low-flow sampling may help to lower turbidity to acceptable levels (McCall et al., 1997; EPA, 1996a).

Low-Flow Purging and Sampling Protocols

To conduct low-flow purging and sampling, a pump that can be operated at a low-flow rate normally is needed. For large wells (e.g., 2-inch diameter or greater), less than 500 mL/min is often needed; for small diameter DPT wells and point-in-time samplers, flow rates as low as 100 mL/min may be needed. As a result of their design, bailers generally are inappropriate for low-flow purging and sampling. Inertial-lift pumps, or other well sampling devices that agitate the water column also generally cannot be used for low-flow purging and sampling

Before purging and sampling can begin, the hydraulic conductivity of the screened interval normally needs to be evaluated to ensure that low-stress pumping is maintained. To begin, the water level should be measured to determine when drawdown in the well stabilizes. As water is purged from the well, water quality indicator parameters (e.g., pH, temperature, specific conductance, dissolved oxygen, redox potential, and in some cases turbidity) generally need to be measured to determine when the readings stabilize and samples can be collected. The results can then be used to define well-specific, low-flow procedures.

Passive Sampling Protocols

In situations where a sampling point cannot yield sufficient water to support low-flow sampling, a passive sampling (also referred to as micropurging) approach generally is preferred (Powell and Puls, 1993; Puls and Barcelona, 1996). Passive sampling involves placing the pump intake within the screened interval and purging a minimal volume of groundwater from the well or sampler—a single volume of the pump chamber and discharge tubing, rather than the greater volumes purged by low-flow sampling or the multiple well volumes purged using other techniques. The goal of passive sampling generally is to obtain groundwater within the well screen or sampler screen, which is most representative of ambient groundwater quality, without disturbing the water column and introducing the stagnant water above. The sample should be collected immediately after purging the small volume of groundwater.

Passive sampling methods may be appropriate for use in a variety of situations and can be applied to most wells in which there is sufficient water to ensure that a pump intake is submerged throughout purging and sample collection. They are most often applied to wells and samplers installed in low-yield formations. In very low yield formations, however, the water in the screened interval may be of equivalent quality to that in the casing above and not representative of formation water. The application of passive sampling methods, therefore, should be evaluated on a site-specific basis.

Passive sampling typically is easiest to apply when dedicated pumps are used. The flow rates used for passive sampling are lower than those used for low-flow purging and sampling—generally less than 100 mL/min. Because very low hydraulic conductivity formations do not yield sufficient water to satisfy the demands of a pump, even at these low-flow rates, drawdown may occur. Thus, to determine the volume of water available for sampling, the volume of water within the well screen above the pump intake should be calculated. Only this

volume, which normally will be very small for most DPT wells, should be collected. Sampling should not continue once water from the top of the screen is drawn close to the pump because casing water should not be collected as part of the sample. Since indicator parameters are not typically analyzed, this method does not normally provide any evidence that the sample taken is representative of formation water. When non-dedicated equipment is used, there is a higher risk of mixing casing and screened interval water which can add to the uncertainty of the representativeness of the sample. Table 4.1 provides a comparison between low-flow and passive sampling methods.

Table 4.1
Comparison of Some Key Elements of Low-Flow and Passive Sampling

	Low-Flow Sampling	Passive Sampling
Hydraulic Conductivity	Sufficient to maintain steady water level during sampling	Too low to allow low-flow sampling
Analyte Applicability	All analytes except NAPLs	All analytes except NAPLs
Pump Discharge Rate	500 mL/min to100 mL/min depending on well/sampling point size and hydraulic conductivity.	<100 mL/min
Purge Volume	Continuous until parameters (e.g., specific conductance, turbidity, O_2, redox) stabilize	Greater than the volume of the pump and the submerged tubing

Section 5: Recommended Methods for Minimizing Potential for Cross-Contamination

As mentioned in Section 3, the potential for cross-contamination should be considered when advancing any type of groundwater sampling tool or monitoring well into the subsurface because it can result in sample bias, incorrect decisions, or the spread of contaminants. Methods for avoiding cross-contamination should be discussed and accounted for in project planning with respect to:

- Avoiding drag-down;
- Avoiding the creation of hydraulic conduits;
- Decontaminating equipment; and,
- Decommissioning DPT wells and borings.

These issues typically apply to both DPT and conventional wells; however, because of the different methods of construction, the solutions often differ even though the results are often the same. This section provides guidance on how these issues can relate to DPT methods because the methods for conventional wells are well established.

Avoiding Drag-Down

Drag-down of contamination is commonly considered to be less of a problem with DPT methods than with conventional well drilling techniques, such as hollow stem augering, where contaminants have a better chance of sticking to the augers as they advance. As DPT rods are advanced, the action of pushing the drive rods through new soil generally wipes away old soil. In fact, researchers have demonstrated the lack of drag-down with DPT in a number of studies (Cherry, et al. 1992; Pitkin et al., 1994; McCall et al., 1997; Pitkin et al., 1999); however, as with conventional drilling techniques, it is unlikely that DNAPL or certain soils, such as sticky clays, would be completely wiped clean as the rods advance. In addition, certain DPT methods can result in drag-down if used in inappropriate situations. This is primarily a problem with advancing multi-level samplers in contaminated fine-grained soil, which can clog the screens, and with advancing exposed screen monitoring well installations, which can carry shallow contaminated soil and groundwater to the target sampling depth. Thus, exposed screen well installations should not be considered for use in contaminated areas.

Where drag-down is a concern, use of DPT equipment that will minimize drag-down potential, such as protected-screen point-in-time samplers, the Waterloo Profiler, or sealed-screen monitoring wells should be considered. In addition, the DPT sampler or well should be properly developed to remove the affected soil and groundwater.

Avoiding the Creation of Hydraulic Conduits

Creation of hydraulic conduits that allow the downward flow of groundwater and contaminants can be avoided by sealing off the borehole annulus—the space between the borehole wall and the rod string. This issue is of particular concern when the borehole hydraulically connects previously unconnected hydrogeologic units, or when DNAPLs with low viscosity are present that can migrate downward along the vertical conduit. In addition to using grout to seal the annulus, an important method of reducing downward migration along the rod string is to minimize the borehole annulus. Two important considerations include:

- Using a drive tip that is the same diameter or smaller than the drive rods; and
- Using rods and samplers with the same diameter.

The absence of an annulus, however, does not necessarily prohibit contaminant migration because there may not be an effective seal between the steel rods and the borehole wall. This issue is not unique to DPT methods and should also be considered when drilling boreholes using conventional techniques.

DPT techniques are not recommended for installing monitoring wells with screens set in an interval below a confining layer if there is a real danger of contaminating the lower layer. Instead, construction of a "telescoped" monitoring well using conventional drilling methods should be used. This type of well involves drilling into the top of the aquitard, placing a steel casing in the hole and grouting it into place by tremieing grout into the annulus. The hole is then advanced using a drill bit that fits inside the steel casing. Upon reaching the target depth, the well screen and casing are lowered into place and the well completion materials are installed as the casing is slowly retracted. Multiple casings can be telescoped inside the other if more than one aquitard is present. DPT cannot be used for telescoped well construction because the annulus is too narrow to allow for an adequate grout seal to be installed along the drive casing.

Decontaminating Equipment

As with all groundwater sampling equipment, DPT equipment should be decontaminated before sampling at a new location to avoid cross-contamination. In addition, disposable material should be discarded properly. Some sampling tools, by virtue of their design, may be difficult to disassemble for cleaning. In these cases, when replacing associated tubing, hose, or pipe is not feasible, it may be more practical to clean these tools by circulating cleaning solutions and rinses through the device in accordance with appropriate guidance (e.g., ASTM D5088, ASTM, 2001g; RCRA Ground-Water Monitoring Draft Technical Guidance, EPA, 1992). Where field decontamination is not practical or possible, it may be simpler to use dedicated sampling devices or take a number of portable sampling devices into the field and decontaminate them later at a more appropriate location. Following any cleaning procedure, equipment rinseate blanks should be collected to assess the effectiveness of the cleaning procedure.

Decommissioning DPT Wells and Borings

As with conventional soil borings or abandoned monitoring wells, DPT boreholes for point-in-time sampling and abandoned DPT monitoring wells should be decommissioned to avoid creating a conduit for contaminant migration, either from the surface or between subsurface geologic units. Several methods are available for decommissioning DPT holes, but the method chosen should be capable of backfilling the hole completely with grout or a bentonite slurry, from bottom to top and without gaps. The most appropriate method will depend on a number of factors, including the type and size of DPT equipment being used, site-specific subsurface conditions, and state and/or local regulations. The type of slurry selected may also depend on the remedial action anticipated at the site. For example, a silica flour grout mixture may be selected for sites that may be treated with in-situ thermal technology.

The methods available for decommissioning DPT boreholes include:

- Retraction grouting;
- Re entry grouting; and
- Surface pouring.

These methods are detailed in ASTM D6001 (ASTM, 2001e), EPA (1997), and Lutenegger and DeGroot (1995). Figure 5.1 illustrates the use of these methods, and the following paragraphs summarize the techniques and their applications.

Retraction Grouting

Retraction grouting typically involves pumping a high-solids bentonite and water mixture or a neat cement grout through the rod and tool string and out the bottom of the sampling tool as the tool is withdrawn from the hole. To use this method, a port is needed at the end or sides of the tool or an expendable tip is necessary on the terminal end of the tool through which the grout can be pumped. Because the hole is grouted as the tool is withdrawn, this method ensures that the borehole is sealed throughout its length. Retraction grouting is generally considered to be the most reliable borehole sealing technique.

Re entry Grouting

Re entry grouting typically involves pumping grout through a tremie pipe (a rigid pipe, usually Schedule 40 or 80 Type I PVC) inserted into the borehole immediately following withdrawal of the rod string. Alternatively, the rod string may be reinstalled in the borehole, without the sampling tool, so that grout may be pumped through the open rods. The grout should be pumped continuously from the bottom of the hole to the top as the tremie pipe (or rod string) is withdrawn to avoid gaps and bridging (i.e., plugging the hole before grout reaches total depth) of the grout. Typically, re entry grouting is effective only if the hole remains open until tremie pipe or rods can be extended to the bottom of the borehole. If a portion of the borehole collapses, the tremie pipe or rods will not penetrate to the total depth of the hole. In this situation, it may be necessary to put an expendable tip on the end of the rod string, push the string to the total depth of the hole,

Figure 5.1
Sample Methods for Sealing Direct Push Technology Holes

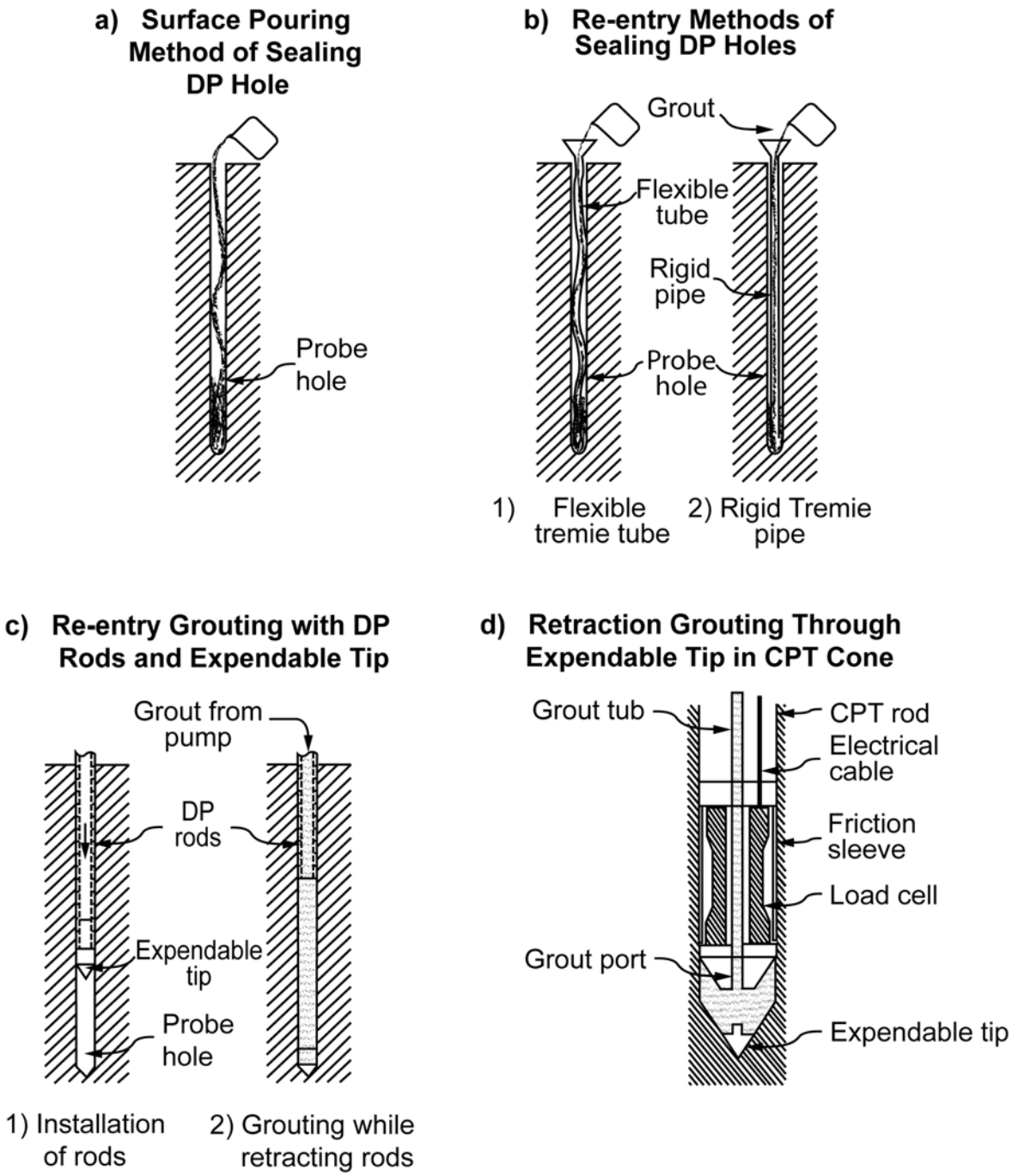

Source: Adapted from Lutenegger & DeGroot, 1995

knock out the tip, and pump grout through the rods as they are withdrawn. Re entry grouting by this method may not provide a reliable seal if the DPT rods do not follow the original borehole, but the original borehole should provide the path of least resistance under most conditions.

By using a high pressure grout pump and nylon tremie tube it is possible to perform bottom-up grouting in the small annular spaces of DPT equipment. Slurries of 20-30% bentonite or neat cement grout are most commonly used to meet state regulatory requirements.

Surface Pouring

Surface pouring normally is the simplest method of borehole decommissioning; however, it may not be as effective as the other methods in most situations. It involves pouring either dry bentonite (granules, chips, or pellets), bentonite slurry, or neat cement grout from the surface down the open borehole after the rod string and tool are removed. Surface pouring may be effective if the borehole does not collapse after the rods are removed, and if the borehole is relatively shallow (less than about 10 or 15 feet). Where dry bentonite materials are proposed for use, it normally will only be effective if the bentonite is either hydrated from the surface immediately after installation or if it is installed beneath the water table. Maintaining a seal in the borehole requires that the soil moisture content be sufficient to keep the bentonite hydrated after installation. In deep holes, dry bentonite products can bridge, resulting in an incomplete seal. In situations where boreholes partially collapse, materials poured from the surface will not seal the borehole properly. This method can be improved by using a flexible tremie tube or a rigid tremie pipe to reenter the hole and fill it from the bottom up, however, if the hole collapses before the tremie can be installed, the tremie may not be effective either.

Section 6: Conclusions

Direct push technologies can be valuable tools for environmental investigations and facilitate the use of a dynamic work plan strategy. They have a number of potential advantages over conventional groundwater sampling methods and they can have the added benefit of being able to provide numerous other types of detailed subsurface data, such as geophysical, analytical, and hydrogeologic data. The diversity and capabilities of DPT equipment and methods are large enough that under many situations DPT can be used to provide the level of groundwater data quality needed for projects where the subsurface conditions and depth of investigation are amenable to pushing techniques. When techniques common to conventional well installation are followed, such as adequate well development, low-flow purging and sampling, proper decontamination of equipment, and preventing the creation of a hydraulic conduit, quality groundwater samples can be obtained.

DPT will not be appropriate for all situations. DPT methods typically are more limited in their depth of penetration and the types of materials they can penetrate than conventional drilling methods. Some methods may not be able to provide sufficient sample volume or sufficiently low turbidity. Use of DPT may be limited in lower yield formations. Conventional wells with larger diameters may be required to minimize the affect of lower yield formations. Lastly, DPT methods cannot always be used where confining layers are present and there is a danger of creating a vertical hydraulic conduit that could contaminate underlying layers. In these instances, telescoped wells may be needed to prevent downward migration of contaminants beneath a confining layer. As a result, DPT cannot completely replace the use of conventional monitoring wells. Rather, DPT provides additional choices to select equipment and methods for collecting environmental data.

This page is intentionally blank.

References

Ahrens, T.P. 1957. Well design criteria: part one, *Water Well Journal*, Vol. 11, No. 4, pp. 13-30.

ASTM. 2001a. *Standard Test Method for Deep, Quasi-Static, Cone and Friction-Cone Penetration Tests of Soils*, ASTM D3441. American Society for Testing and Materials. West Conshohocken, PA, 7 pp.

ASTM. 2001b. *Standard Test Method for Performing Electronic Friction Cone and Piezocone Penetration Testing of Soils*, ASTM D5778. American Society for Testing and Materials. West Conshohocken, PA 18 pp.

ASTM. 2001c. *Standard Practice for Cone Penetrometer Technology Characterization of Petroleum Contaminated Sites with Nitrogen Laser-Induced Fluorescence*, ASTM D6167. American Society for Testing and Materials. West Conshohocken, PA, 7 pp.

ASTM. 2001d. *Standard Guide for Direct Push Soil Sampling for Environmental Site Characterization*, ASTM D6282. American Society for Testing and Materials. West Conshohocken, PA, 19 pp.

ASTM. 2001e. *Standard Guide for Direct-Push Water Sampling for Geoenvironmental Investigations*, ASTM D6001. American Society for Testing and Materials. West Conshohocken, PA.

ASTM. 2001f. *Standard Guide for Development of Ground-Water Monitoring Wells in Granular Aquifers*, ASTM D5521. American Society for Testing and Materials. West Conshohocken, PA, 15 pp.

ASTM. 2001g. *Standard Practice for Decontamination of Field Equipment Used at Nonradioactive Waste Sites*, ASTM D5088. American Society for Testing and Materials. West Conshohocken, PA, 20 pp.

ASTM. 2001h. *Standard Practice for Decontamination of Field Equipment Used at Low Level Radioactive Waste Sites*, ASTM D5608. American Society for Testing and Materials. West Conshohocken, PA, 8 pp.

ASTM. 2001i. *Standard Guide for the Selection of Purging and Sampling Devices for Ground-Water Monitoring Wells*, ASTM D6634. American Society for Testing and Materials. West Conshohocken, PA, 14 pp.

ASTM. 2002. *Standard Test Method for Particle-Size Analysis of Soils*, ASTM D422-63. American Society for Testing and Materials. West Conshohocken, PA, 8 pp.

ASTM. 2003a. *Guide for Installation of Direct Push Ground Water Monitoring Wells*, ASTM D6724-01. American Society for Testing and Materials. West Conshohocken, PA, 9 pp.

ASTM. 2003b. *Standard Practice for Direct Push Installation of Prepacked Screen Monitoring Wells in Unconsolidated Aquifers*, ASTM D6725-01. American Society for Testing and Materials. West Conshohocken, PA, 15 pp.

ASTM. 2003c. *Standard Practice for Design and Installation of Ground Water Monitoring Wells in Aquifers*, ASTM D5092-02. American Society for Testing and Materials. West Conshohocken, PA, 14 pp.

Applegate, J.L. and D.M. Fitton. 1997. Rapid site assessment applied to the Florida Department of Environmental Protection's drycleaning solvent cleanup program. HazWaste World Superfund XVIII Conference Proceedings, December 1997, Washington DC, pp. 695-703.

Backhus, D.A., J.N. Ryan, D.M. Groher, J.K. MacFarlane, and P.M. Gschwend. 1993. Sampling colloids and colloid-associated contaminants in ground water. *Ground Water*, Vol. 31, No. 3, pp. 466-479.

Baerg, D.L., R.C. Storr, J.A. Cherry, and D.J.A. Smyth. 1992. Performance testing of conventional and innovative downhole samplers and pumps for VOCs in a laboratory monitoring well. Proceedings, National Ground Water Sampling Symposium, Washington, DC November 1992, pp. 71-76.

Bangsund, W. J., C.G. Peng, and W.R. Mattsfield. 1994. Investigation of contaminant migration by low-flow rate sampling techniques. Proceedings, Eighth Annual Outdoor Action Conference, National Ground Water Association, Dublin, OH, pp. 311-326.

Barcelona, M.J., J.P. Gibb, J.A. Helfrich, and E.E. Garske, 1985, *Practical Guide for Ground-Water Sampling*. Illinois State Water Survey Contract Report 374, Champaign, IL, 94 pp.

Barcelona, M.J., J.P. Gibb, and R.A. Miller. 1983. *A Guide to the Selection of Materials for Monitoring Well Construction and Ground-Water Sampling*. Illinois State Water Survey Contract Report 327, Champaign, IL, 78 pp.

Barcelona, M.J. and J.A. Helfrich. 1986. Well construction and purging effects on ground-water samples. *Environmental Science and Technology*, Vol. 20, No. 11, pp. 1179- 1184.

Barcelona, M.J., J.A. Helfrich, E.E. Garske and J.P. Gibb. 1984. A laboratory evaluation of ground water sampling mechanisms. *Ground Water Monitoring Review*, Vol. 4, No. 2, pp. 32-41.

Barcelona, M. J., H.A. Wehrmann, and M.D. Varljen. 1994. Reproducible well-purging procedures and VOC stabilization criteria for ground water sampling. *Ground Water*, Vol. 32, No. 1, pp. 12-22.

Barker, J.F. and R. Dickhout. 1988. An evaluation of some systems for sampling gas-charged ground water for volatile organic analysis. *Ground Water Monitoring Review*, Vol. 8, No. 4, pp. 112-120.

Bergren, C.L., R.C. Tuckfield, and N.M. Park. 1990. Suitability of the hydropunch for assessing ground water contaminated by volatile organics. In: Proceedings of Fourth National Outdoor Action Conference on Aquifer Restoration, Ground Water Monitoring and Geophysical Methods, Volume 2, National Ground Water Association, Dublin, OH, pp. 387-401.

Berzins, N.A. 1992. Use of the cone penetrometer test and BAT ground water monitoring system to assess deficiencies in monitoring well data. Proceedings of the Sixth National Outdoor Action Conference, Las Vegas, NV May 1992, National Ground Water Association, Westerville, OH, pp. 327-339.

BP Corporation North America, Inc. 2002. *Monitoring Well Comparison Study: An Evaluation of Direct-Push Versus Conventional Monitoring Wells*. May 1, 2002, 80 pp. (available at www.epa.gov/swerust1/cat/wellstdy.pdf).

Buddemeier, R.W. and J.R. Hunt. 1988. Transport of colloidal contaminants in ground water. Radionuclide migration at the Nevada Test Site. *Applied Geochemistry*, Vol. 3 pp. 535-548.

Butler, J., et al. 2002. Hydraulic tests with direct-push equipment. *Ground Water*, Vol. 40, No. 1, pp. 25-36.

Canova, J.L. and M.G. Muthig. 1991. The effect of latex gloves and nylon cord on ground-water sample quality. *Ground Water Monitoring Review*, Vol. 11, No. 1, pp. 98-103.

Clark, L. and K.M. Baxter. 1989. Ground water sampling techniques for organic micropollutants: UK experience. *Quarterly Journal of Engineering Geology*, Vol. 22, pp. 159- 168.

Cherry, J.A. 1992. Ground water monitoring: some current deficiencies and alternative approaches, Chapter 13. In: *Hazardous Waste Site Investigations: Toward Better Decisions*, R.B. Gammage and B.A. Berven, editors, Lewis Publishers, Boca Raton, FL, pp.119-134.

Cherry, J.A., R.A. Ingleton, D.K. Solomon, and N.D. Farrow. 1992. Low technology approaches for drive point profiling of contaminant distributions. In: Proceedings, National Ground Water Sampling Symposium, pp. 109-111.

Crumbling, D. 2000. Improving the cost-effectiveness of hazardous waste site characterization and monitoring. Special Report #6, *Failsafe*, January 2000, 10 pp.

Devlin, J.F. 1987. Recommendations concerning materials and pumping systems used in the sampling of ground water contaminated with volatile organics. *Water Pollution Research Journal of Canada*, Vol. 22, No. 1, pp. 65-72.

Dragun, J. 1988. *The Soil Chemistry of Hazardous Materials*. Hazardous Materials Control Research Institute, Silver Spring, MD.

Driscoll, F.G. 1986. *Groundwater and Wells* (Second Edition). Johnson Division, UOP, Inc., St. Paul, MN.

Edge, R.W. and K. Cordry. 1989. The hydropunch: an in-situ sampling tool for collecting ground water from unconsolidated sediments. *Ground Water Monitoring Review*, Vol. 9, No. 3, pp. 177-183.

Eichholz, G.G., B.G. Wahlig, G.F. Powell, and T.F. Craft. 1982. Subsurface migration of radioactive waste materials by particulate transport. *Nuclear Technology*, Vol. 58, pp. 511-519.

Enfield, C.G. and G. Bengtsson. 1988. Macromolecular transport of hydrophobic contaminants in aqueous environments. *Ground Water*, Vol. 26, No. 1 pp. 64-70.

Enfield, C.G., G. Bengtsson, and R. Lindquist. 1989. Influence of macromolecules on chemical transport. *Environmental Science & Technology*, Vol. 23, No. 10, pp. 1278-1286.

Geoprobe. 1996. *Geoprobe® 0.5-in. x 1.4-in. OD and 0.75-in. x 1.4-in. OD Prepacked Screen Monitoring Wells, Standard Operating Procedure.* Technical Bulletin No. 962000, September, revised June 2002.

Gibb, J.P., R.M. Schuller, and R.A. Griffin. 1981. *Procedures for the Collection of Representative Water Quality Data from Monitoring Wells*. Illinois State Water Survey/Geological Survey Cooperative Ground-Water Report No. 7, Champaign, IL.

Gibs, J. and T.E. Imbrigiotta. 1990. Well purging criteria for sampling purgeable organic compounds. *Ground Water*, Vol. 28, No. 1, pp. 68-78.

Gibs, J., T.E. Imbrigiotta, J.H. Ficken, J.F. Pankow, and M.E. Rosen. 1994. Effect of sample isolation and handling on the recovery of purgeable organic compounds. *Ground Water Monitoring and Remediation*, Vol. 9, No. 2, pp. 142-152.

Gillham, R.W. and S.F. O'Hannesin. 1990. Sorption of aromatic hydrocarbons by materials used in construction of ground-water sampling wells. In: Proceedings, ASTM Symposium on Standards Development for Ground Water and Vadose Zone Monitoring Investigations, ASTM Special Technical Publication 1053, pp. 108-124.

Gillham, R.W., M.J.L. Robin, J.F. Barker, and J.A. Cherry. 1985. *Field Evaluation of Well Purging Procedures*. American Petroleum Institute Publication 4405, Environmental Affairs Department, 109 pp.

Gillham, R.W., M.J.L. Robin, J.F. Barker, and J.A. Cherry. 1983. *Ground-Water Monitoring and Sample Bias.* American Petroleum Institute Publication 4367, 206 pp.

Grolimund, D., M. Borkovec, K. Barmettler, and H. Sticher. 1996. Colloid-facilitated transport of strongly sorbing contaminants in natural porous media: a laboratory column study. *Environmental Science & Technology*, American Chemical Society, Vol. 30, No. 10, pp. 3118-3123.

Gschwend, P.M., D.A. Backhus, J.K. MacFarlane, and A.L. Page. 1990. Mobilization of colloids in ground water due to infiltration of water at a coal ash disposal site. *Journal of Contaminant Hydrology*, Vol. 6 pp. 307-320.

Gschwend, P.M. and M.D. Reynolds. 1987. Monodisperse ferrous phosphate colloids in an anoxic ground water plume. *Journal of Contaminant Hydrology*, Vol. 1, pp. 309-327.

Heidlauf, D.T. and T.R. Bartlett. 1993. Effects of monitoring well purge and sampling techniques on the concentration of metal analytes in unfiltered ground water samples. In: Proceedings, Seventh Outdoor Action Conference and Exposition, National Ground Water Association, Dublin, OH, pp. 437-450.

Henebry, B.J. and G.A. Robbins. 2000. Reducing the influence of skin effects on hydraulic conductivity determinations in multi-level samples installed with direct push methods, *Ground Water*, Vol. 38, No. 6, pp. 882-886.

Herzog, B., J. Pennino, and G. Nielsen. 1991. Ground-water sampling, Chapter 11 in *The Practical Handbook of Ground-Water Monitoring*. D.M. Nielsen, editor, Lewis Publishers, Chelsea, MI, pp. 449-499.

Hewitt, A.D. 1992. Potential of common well casing materials to influence aqueous metal concentrations. *Ground Water Monitoring and Remediation*, Vol. 12, No. 2, pp. 131-136.

Ho, James 1983. Effect of sampling variables on recovery of volatile organics in water. *Journal of the American Water Works Association*, Vol. 75, No. 11, pp. 583-586.

Holm, T.R., G.K. George, and M.J. Barcelona. 1988. Oxygen transfer through flexible tubing and its effects on ground-water sampling results. *Ground Water Monitoring Review*, Vol. 8, No. 3, pp. 83-89.

Howard, P., et al. 1993a. *Handbook of Environmental Fate and Exposure Data for Organic Chemicals, Volume II Solvents*. Lewis Publishers.

Howard, P., et al., 1993b. *Handbook of Environmental Fate and Exposure Data for Organic Chemicals, Volume IV Solvents 2*. Lewis Publishers.

Houghton, R.L. and M.E. Berger. 1984. Effects of well-casing composition and sampling method on apparent quality of ground water. Proceedings of the Fourth National Symposium on Aquifer Restoration and Ground Water Monitoring, Columbus, OH, May, 1984, National Water Well Association, Worthington, OH, pp. 203-213.

Huntzinger, T.L. and L.E. Stullken. 1988. *An Experiment in Representative Ground-Water Sampling for Water-Quality Analysis*. U.S. Geological Survey, Water Res. Inv. Report 88-4178, Reston, VA.

Iles, D.L., P.D. Hammond, and L.D. Schulz. 1992. Effects of sampling methods on inorganic water chemistry results. In: Proceedings, National Ground Water Sampling Symposium, Washington, DC November 1992, pp. 41-70.

Imbrigiotta, T.E., J. Gibs, T.V. Fusillo, G.R. Kish, and J.J. Hochreiter. 1988. Field evaluation of seven sampling devices for purgeable organic compounds in ground water. In: Ground-Water Contamination: Field Methods, ASTM STP 963, A.G. Collins and A.J. Johnson, editors, American Society for Testing and Materials, Philadelphia, PA, pp. 258-273.

Kaback, D.S., C.L. Bergren, C.A. Carlson, and C.L. Carlson. 1990. Testing a ground water sampling tool: are the samples representative? In: Proceedings, Fourth National Outdoor Action Conference on Aquifer Restoration, Ground Water Monitoring and Geophysical Methods, Volume 2, National Ground Water Association, Dublin, OH, pp. 403-417.

Karklins, S. 1996. *Ground Water Sampling Desk Reference.* Wisconsin Department of Natural Resources Publication #PUBL-DG-037 96, Wisconsin DNR Bureau of Drinking Water and Ground Water, 165 pp.

Kearl, P.M., N.E. Korte, M. Stites, and J. Baker. 1994. Field comparison of micropurging vs. traditional ground water sampling. *Ground Water Monitoring and Remediation*, Vol. 14, No. 4, pp. 183-190.

Kearl, P.M., N.E. Korte, and T.A. Cronk. 1992. Suggested modifications to ground water sampling procedures based on observations from the colloidal borescope. *Ground Water Monitoring Review*, Vol. 12, No. 2, pp. 155-161.

Keely, J.F. and K. Boateng. 1987. Monitoring well installation, purging and sampling techniques part 1: conceptualizations. *Ground Water*, Vol. 25, No. 3, pp.300-313.

Knobel, L.L. and L.J. Mann. 1993. Sampling for purgeable organic compounds using positive-displacement piston and centrifugal pumps: a comparative study. *Ground Water Monitoring and Remediation*, Vol. 13 No. 2, pp. 142-148.

Kram, Mark, et al. 2003. Direct-push wells prove effective for long-term ground water monitoring. *Water Well Journal*, Vol. 57, No. 4, pp. 16 and 18.

Kram, Mark, 2001. Personal communication with David M. Nielsen.

Kram, M., D. Lorenzana, J. Michaelsen, and E. Lam. 2000. *Performance Comparison: Direct-Push Wells Versus Drilled Wells*. NFESC Technical Report TR-2120-ENV, October 2000, Naval Facilities Engineering Command, Washington, DC, 55 pp.

Lee, G. F. and R.A. Jones. 1983. Guidelines for sampling ground water. *Journal of the Water Pollution Control Federation*, Vol. 55, No. 1, pp. 92-96.

Lutenegger, A.J. and D.J. DeGroot. 1995. Techniques for sealing cone penetrometer holes. *Canadian Geotechnical Journal*, Vol. 32, No. 5, pp. 880-891.

MacFarlane, I.D., J.L. Kocornik, F.T. Barranco, and A.R. Bonas. 1992. The application of slow pumping at a manufactured gas plant. Proceedings of the Sixth National Outdoor Action Conference, Las Vegas, NV, May 1992, National Ground Water Association, Westerville, OH, pp. 413-426.

Marsh, M.J. and J.W. Lloyd. 1980. Details of hydrochemical variations in flowing wells. *Ground Water*, Vol. 18, No. 4, pp. 366-373.

Mason, S.A., J. Barkach, and J. Dragun. 1992. Discussion of "literature review and model (COMET) for colloidal/metals transport in porous media." *Ground Water*, Vol. 30, No. 1, pp.104-106.

McCall, W., et al. 2002. A dual-tube direct-push method for vertical profiling of hydraulic conductivity in unconsolidated formations. *Environmental & Engineering Geoscience*, Vol. VIII, No. 2, pp. 75-84.

McCall, W. 2000. Innovative direct-push ground-water monitoring compared to conventional methods. In: Proceedings of the Second International Conference on Remediation of Chlorinated and Recalcitrant Compounds, Battelle Press, Columbus, OH, Vol. C2-1, pp. 71-78.

McCall, W., S. Stover, C. Enos, and G. Fuhrmann. 1997. Field comparison of direct push prepacked screen wells to paired HSA 2" PVC wells. In: Proceedings Vol. 2, HazWasteWorld Superfund XVIII Conference, December 1997, Washington, DC, pp. 647-655.

McCarthy, J.F. and C. Degueldre. 1993. Sampling and characterization of colloids and particles in ground water for studying their role in contaminant transport. In: *Environmental Particles*, J. Buffle, and H.P. van Leeuwen, editors, Lewis Publishers, pp. 247-315.

McCarthy, J. and L. Shevenell. 1998. Obtaining representative ground-water samples in a fractured and karstic formation. *Ground Water*, Vol. 36, No. 2, pp. 251-260.

McCarthy, J.F. and J.M. Zachara. 1989. Subsurface transport of contaminants: binding to mobile and immobile phases in ground water aquifers. *Environmental Science and Technology*, Vol. 23, No. 5, pp. 496-504.

McDowell-Boyer, L.M., J.R. Hunt, and N. Sitar. 1986. Particle transport through porous media. *Water Resources Research*, Vol. 22, No. 13, pp. 1901-1921.

Miller, G.D. 1982. Uptake and release of lead, chromium and trace level volatile organics exposed to synthetic well casings. In: Proceedings, Second National Symposium on Aquifer Restoration and Ground Water Monitoring, National Ground Water Association, Worthington, Ohio, pp. 236 - 245.

Montgomery, J. and L. Welkom. 1991. *Groundwater Chemicals Desk Reference*. Lewis Publishers.

Moylan, J.E. 1991. *Data Gaps in Remedial Design*. U.S. EPA/U.S. Army Corps of Engineers Engineering Issue, July, 1991, 5 pp.

Muska, C.F., W.P. Colven, V.D. Jones, J.T. Scogin, B.B. Looney, and V. Price, Jr. 1986. Field evaluation of ground water sampling devices for volatile organic compounds. In: Proceedings of the Sixth National Symposium and Exposition on Aquifer Restoration and Ground Water Monitoring, National Water Well Association, Dublin, OH, pp. 235-245.

NWWA/PPI. 1980. *Manual on the Selection and Installation of Thermoplastic Water Well Casing*. National Water Well Association, Worthington, OH, 64 pp.

Nielsen, D.M. (editor). 1991. *The Practical Handbook of Ground-Water Monitoring*. Lewis Publishers, Chelsea, MI, 717 pp.

Nielsen, D.M. 1995a. The relationship of monitoring well design, construction and development to turbidity in wells, and related implications for ground water sampling, In: *Ground Water Sampling—A Workshop Summary*, EPA 600/R-94/205. U.S. EPA Office of Research and Development, Washington DC, p. 16.

Nielsen, D.M. 1995b. Building a better monitoring well using ASTM standards to improve well construction and cut monitoring costs. Workshop Presented at the Ninth National Outdoor Action Conference and Exposition, Las Vegas, NV, May 1995, National Ground Water Association, Westerville, OH, pp. 47-59.

Nielsen, D.M. and G.L. Nielsen. 1995. Understanding the ramifications of change: developments in monitoring well purging and ground-water sample filtration. Workshop Presented at the Ninth National Outdoor Action Conference and Exposition, Las Vegas, NV, May 1995, National Ground Water Association, Westerville, OH, pp. 233-239.

Nielsen, D.M. and G.L. Nielsen. 1999. *Technical Guidance on Low-Flow Purging & Sampling and Passive Sampling.* Nielsen Environmental Field School Publication, NEFS-TG001-99, Galena, OH, 57 pp.

Nielsen, D.M. and R. Schalla. 1991. Design and installation of ground-water monitoring wells. Chapter 7 in *The Practical Handbook of Ground-Water Monitoring*, D.M. Nielsen, Editor. Lewis Publishers, Chelsea, MI, pp. 239-332.

Nielsen, D.M. and G.L. Yeates. 1985. A comparison of sampling mechanisms available for small-diameter ground water monitoring wells. *Ground Water Monitoring Review*, Vol. 5, No. 2, pp. 83-89.

O'Melia, C.R. 1990. Kinetics of colloid chemical processes in aquatic systems. In *Aquatic Chemical Kinetics*, W. Stumm editor. Wiley & Sons, NY, NY, pp. 447-474.

Oneacre, J. and D. Figueras. 1996. Ground water variability at sanitary landfills: causes and solutions. In Proceedings, ASCE Conference on Uncertainty in the Geologic Environment, Madison, WI, July 31 - August 3, 1996, pp. 965-987.

Parker, L. 1991. Suggested guidelines for the use of PTFE, PVC and stainless steel in samplers and well casings. In: *Current Practices in Ground Water and Vadose Zone Investigations*, ASTM STP 1118, D.M. Nielsen and M.N. Sara, editors. American Society for Testing and Materials, Philadelphia, PA. 13 pp.

Parker, L. 1994. The effects of ground water sampling devices on water quality: a literature review. *Ground Water Monitoring and Remediation*, Vol. 14, No. 2, pp. 130-141.

Parker, L.V., A.D. Hewitt, and T.F. Jenkins. 1990. Influence of casing materials on trace-level chemicals in well water. *Ground Water Monitoring Review*, Vol. 10 No. 2, pp. 146-156.

Paul, D.G., C.D. Palmer, and D.S. Cherkauer. 1988. The effect of construction, installation and development on the turbidity of water in monitoring wells in fine-grained glacial till. *Ground Water Monitoring Review*, Vol. 8, No. 1, pp. 73-82.

Paul, C.J. and R.W. Puls. 1997. Impact of turbidity on TCE and degradation products in ground water. *Ground Water Monitoring and Remediation*, No. 17 No. 1, pp. 128-133.

Pearsall, K.A. and D.A.V. Eckhardt. 1987. Effects of selected sampling equipment and procedures on the concentrations of trichloroethylene and related compounds in ground water samples. *Ground Water Monitoring Review*, Vol. 7, No. 2, pp. 64-73.

Penrose, W.R., W.L. Polzer, E.H. Essington, D.M. Nelson, and K.A. Orlandin. 1990. Mobility of plutonium and americium through a shallow aquifer in a semi-arid region. *Environmental Science and Technology*, Vol. 24, pp. 228-234.

Pitkin, S., R.A. Ingleton, and J.A. Cherry. 1994. Use of a drive point sampling device for detailed characterization of a PCE plume in a sand aquifer at a dry cleaning facility. In: Proceedings, Eighth National Outdoor Action Conference and Exposition, National Ground Water Association, Dublin, OH, pp. 395-412.

Pitkin, S.E., J.A. Cherry, R.A. Ingleton, and M. Broholm. 1999. Field demonstrations using the Waterloo Ground Water Profiler. *Ground Water Monitoring and Remediation*, Vol. 19, No. 2, pp. 122-131.

Pohlmann, K.F., G.A. Icopini, R.D. McArthur, and C.G., Rosal. 1994. *Evaluation of Sampling and Field-Filtration Methods for Analysis of Trace Metals in Ground Water*, EPA 600/R-94/119. U.S. EPA Office of Research and Development, Las Vegas, NV.

Pohlmann, K.F. and J.W. Hess. 1988. Generalized ground water sampling device matrix. *Ground Water Monitoring Review*, Vol. 8, No. 4, pp. 82-83.

Pohlmann, K.F., R.P. Blegen, and J.W. Hess. 1991. *Field Comparison of Ground-Water Sampling Devices for Hazardous Waste Sites: An Evaluation Using Volatile Organic Compounds*, EPA 600/4-90/028. U.S. EPA Office of Research and Development, Las Vegas, NV, 102 pp.

Powell, R.M. and R.W. Puls. 1993. Passive sampling of ground water monitoring wells without purging: multilevel well chemistry and tracer disappearance. *Journal of Contaminant Hydrology*, Vol. 12, pp. 51-77.

Powell, R.M. and R.W. Puls. 1997. Hitting the bull's-eye in ground water sampling. *Pollution Engineering*, pp. 51-54.

Puls, R.W. 1990. Colloidal considerations in ground water sampling and contaminant transport predictions. *Nuclear Safety*, Vol. 31, pp. 58-65.

Puls, R.W. and C.J. Paul. 1995. Low-flow purging and sampling of ground-water monitoring wells with dedicated systems. *Ground Water Monitoring and Remediation*, Vol. 15, No. 1, pp. 116-123.

Puls, R.W. and J.F. McCarthy. 1995. Well Purging and Sampling (Workshop Group Summary), Ground Water Sampling - A Workshop Summary, EPA 600/R-94/205, U.S. EPA Office of Research and Development, Washington, DC, pp. 82-87.

Puls, R.W. and M.J. Barcelona. 1996. *Low Flow (Minimal Drawdown) Ground Water Sampling Procedures*, U.S. EPA Ground Water Issue, EPA 540/5-95/504. U.S. EPA Office of Solid Waste and Emergency Response, Washington, DC, 12 pp.

Puls, R.W. and M.J. Barcelona. 1989. *Ground Water Sampling for Metals Analysis*, U.S. EPA Superfund Ground Water Issue, EPA 540/4-89/001. U.S. EPA Office of Solid Waste and Emergency Response, Washington, DC, 6 pp.

Puls, R.W. and J.H. Eychaner. 1990. Sampling ground water for inorganics— pumping rate, filtration and oxidation effects. In: Proceedings, Fourth National Outdoor Action Conference on Aquifer Restoration, Ground Water Monitoring and Geophysical Methods, National Water Well Association, Dublin, OH, pp. 313-327.

Puls, R.W. and R.M. Powell, 1992a. Acquisition of representative ground-water quality samples for metals. *Ground Water Monitoring Review*, Vol. 12, No. 3, pp. 167-176.

Puls, R.W. and R.M. Powell. 1992b. Transport of inorganic colloids through natural aquifer material: implications for contaminant transport. *Environmental Science and Technology*, Vol. 26 No. 3, pp. 614-621.

Puls, R.W., D.A. Clark, B. Bledsoe, R.M. Powell, and C.J. Paul. 1992. Metals in ground water: sampling artifacts and reproducibility. *Hazardous Waste and Hazardous Materials*, Vol. 9, No. 9, pp. 149-162.

Puls, R.W., R.M. Powell, D.A. Clark, and C.J. Paul. 1991. *Facilitated Transport of Inorganic Contaminants in Ground Water: Part II, Colloidal Transport*, EPA 600/M-91/040. Robert S. Kerr Laboratory, U.S. EPA, Ada, OK.

Puls, R.W., J.H. Eychaner, and R.M. Powell. 1990. *Facilitated Transport of Inorganic Contaminants in Ground Water: Part I. Sampling Considerations*, EPA 600/M-90/023. Robert S. Kerr Laboratory, U.S. EPA, Ada, OK, 12 pp.

Reynolds, M.D. 1985. *Colloids in Ground Water*, Masters Thesis. Massachusetts Institute of Technology, Cambridge, MA.

Robertson, W.D., J.F. Barker, Y. LeBeau, and S. Marcoux. 1984. Contamination of an unconfined sand aquifer by waste pulp liquor: a case study. *Ground Water*, Vol. 22, pp. 192-197.

Robin, M.J.L. and R.W. Gillham. 1987. Field evaluation of well purging procedures. *Ground Water Monitoring Review*, Vol. 7, No. 4, pp. 85-93.

Robbins, G.A. and J.M. Martin-Hayden. 1991. Mass balance evaluation of monitoring well purging, part 1. Theoretical models and implications for representative sampling. *Journal of Contaminant Hydrology*, Vol. 8, pp. 203-224.

Ryan, J.N. and P.M. Gschwend. 1990. Colloidal mobilization in two atlantic coastal plain aquifers: field studies, *Water Resources Research*, Vol. 26, pp. 307-322.

Ryan, J. N., S. Mangion, and R. Willey. 1995. Turbidity and colloid transport (working group summary), *Ground Water Sampling—A Workshop Summary*, EPA 600/R-94/205. U.S. EPA Office of Research and Development, Washington, DC, pp. 88-92.

Serlin, C.L. and L.M. Kaplan. 1996. Field comparison of micropurge and traditional ground-water sampling for volatile organic compounds. In: Proceedings, Petroleum Hydrocarbons and Organic Chemicals in Ground Water, National Ground Water Association, Westerville, OH, pp. 177-190.

Shanklin, D.E., W.C. Sidle, and M.E. Ferguson. 1995. Micropurge low-flow sampling of uranium-contaminated ground water at the Fernald environmental management project. *Ground Water Monitoring and Remediation*, Vol. 15, No. 3, pp. 168-176.

Smolley M. and J.C. Kappmeyer. 1991. Cone penetrometer tests and hydropunch sampling: a screening technique for plume definition. *Ground Water Monitoring Review*, Vol. 11, No. 2, pp. 101-106.

Stolzenburg, T.R. and D.G. Nichols. 1985. *Preliminary Results on Chemical Changes in Ground Water Samples Due to Sampling Devices*. EPRI Report EA-4118, 53 pp.

Stolzenburg, T.R. and D.G. Nichols. 1986. Effects of filtration method and sampling device on inorganic chemistry of sampled well water. In: Proceedings, Sixth National Symposium and

Exposition on Aquifer Restoration and Ground Water Monitoring, National Ground Water Association, Worthington, OH, pp. 216-234.

Stumm, W. and J.J. Morgan. 1981. *Aquatic Chemistry*. New York Interscience, 583 pp.

Stumm, W. and J. J. Morgan. 1996. *Aquatic Chemistry: Chemical Equilibria and Rates in Natural Waters, Third Edition.* John Wiley and Sons, Inc., New York, NY.

Tai, D.Y., K.S. Turner, and L.A. Garcia. 1991. The use of a standpipe to evaluate ground-water samplers. *Ground Water Monitoring Review*, Vol. 11, No. 1, pp. 125-132.

Thornton, D., S. Ita, and K. Larsen. 1997. Broader use of innovative ground water access technologies. In: Proceedings Vol. 2, HazWasteWorld Superfund XVIII Conference Proceedings, December 1997, Washington, DC, pp. 639-646.

Unwin, J.T. 1982. *A Guide to Ground Water Sampling*, Technical Bulletin 362. National Council of the Paper Industry for Air and Stream Improvements, New York, NY.

Unwin, J.T. and V. Maltby. 1988. *Investigations of Techniques for Purging Ground Water Monitoring Wells and Sampling Ground Water for Volatile Organic Compounds*. ASTM Special Technical Publication 963, ASTM, Philadelphia, PA, pp. 240-252.

U.S. EPA. 1989. *Handbook of Suggested Practices for the Design and Installation of Ground-Water Monitoring Wells*, EPA 600/4-89/034. Environmental Monitoring Systems Laboratory, Office of Research and Development, Las Vegas, NV, October 1989, 398 pp.

U.S. EPA. 1992. *RCRA Ground-Water Monitoring: Draft Technical Guidance*. Office of Solid Waste, November 1992.

U.S. EPA. 1996a. *Low Stress (Low Flow) Purging and Sampling Procedures for the Collection of Ground-Water Samples from Monitoring Wells.* U.S. EPA Region 1, SOP#GW0001, Boston, MA, 13 pp.

U.S. EPA. 1996b. *Environmental Investigations Standard Operating Procedures and Quality Assurance Manual*. U.S. EPA Region 4, Atlanta, GA.

U.S. EPA. 1997. *Expedited Site Assessment Tools for Underground Storage Tank Sites, A Guide for Regulators*, EPA 510-B-97-001. Office of Underground Storage Tanks, Washington, DC.

U.S. EPA. 2000a. *Guidance for the Data Quality Objectives Process, QA/G-4*, EPA 600/R-96/055. Office of Environmental Information, Washington, DC.

U.S. EPA. 2000b. *Data Quality Objectives Process for Hazardous Waste Site Investigations: EPA QA/G-HHW Final*, EPA 600/R-00/007. Office of Environmental Information, Washington, DC.

U.S. EPA. 2002. *Ground-Water Sampling Guidelines for Superfund and RCRA Project Managers*, http://www.epa.gov/tio/tsp/download/gw_sampling_guide.pdf.

Walker, S.E. 1983. Background ground-water quality monitoring: well installation trauma. In: Proceedings, Third National Symposium on Aquifer Restoration and Ground Water Monitoring, National Water Well Association, Worthington, OH, pp. 235-246.

Yeskis, D., K. Chiu, S. Meyers, J. Weiss, J., and T. Bloom. 1988. A field study of various sampling devices and their effects on volatile organic contaminants. In: Proceedings of Second National Conference on Aquifer Restoration, Ground Water Monitoring and Geophysical Methods, National Water Well Association, Dublin, OH, pp. 471-479.

Zemo, D.A., T.A. Delfino, J.D. Gallinatti, V.A. Baker, and L.R. Hilpert. 1995. Field comparison of analytical results from discrete-depth ground water samplers. *Ground Water Monitoring and Remediation*, Vol. 15, No. 1, pp. 133-141.

Zemo, D.A., Y.G. Pierce, and J.D. Gallinatti. 1994. Cone penetrometer testing and discrete-depth ground water sampling techniques: a cost-effective method of site characterization in a multiple-aquifer setting, *Ground Water Monitoring and Remediation*, Vol. 14, No. 4, pp. 176-182.

This page is intentionally blank.

Appendix: Purging and Sampling Devices

A wide variety of purging and sampling equipment is available for use in DPT sampling points. Available devices can be classified into five general categories:

- Grab mechanisms (including bailers, thief samplers, and syringes);
- Suction-lift mechanisms (including surface centrifugal and peristaltic pumps);
- Centrifugal submersible pumps;
- Positive displacement mechanisms (including gas displacement pumps, bladder pumps, piston pumps, progressing cavity pumps and gear pumps); and
- Inertial-lift pumps.

Though frequently used in the groundwater industry for well development, the gas-lift method is generally considered unsuitable for purging and sampling because the extensive mixing of drive gas and water is likely to strip dissolved gasses from the groundwater and alter the concentration of other dissolved constituents (Gillham et al., 1983). This method is not discussed for this reason.

Grab Sampling Devices

Bailers, thief samplers (e.g., messenger samplers), and syringes are all examples of grab sampling devices. These devices are lowered into the sampling point on a cable, rope, string, chain, or tubing to the desired sampling depth and then retrieved for purge water discharge, sample transfer, or direct transport of the device to the laboratory for sample transfer and analysis.

The most commonly used grab samplers are bailers, which are available in both single check valve and dual check valve designs. The single check valve bailer is lowered to the sampling point, and water entering the bailer opens the check valve and fills the bailer. During retrieval, gravity and the weight of the water inside the bailer closes the check valve. There is some potential for the contents of the bailer to mix with the surrounding water column during retrieval. If mixing is not desirable, then a dual check valve bailer is advisable. Dual check valve bailers are intended to prevent mixing of the sample with the water column upon retrieval. Water passes through the dual check valve bailer as it is lowered. Upon retrieval, both check valves seat, retaining the aliquot of water inside the bailer. Groundwater investigators can minimize mixing by raising the bailer in a steady upward motion with no pausing or slight downward motion, which can occur if the retrieval is done manually.

The thief sampler, employs a mechanical, electrical, or pneumatic trigger to actuate plugs or valves at either end of an open tube to open and/or close the chamber after lowering it to the desired sampling depth, thus sampling from a discrete interval within the well.

The syringe sampler is divided into two chambers by a moveable piston or float. The upper chamber is attached to a flexible air line that extends to the ground surface. The lower chamber is the sample chamber. The device is lowered into the sampling point and activated by

applying a suction to the upper chamber, thereby drawing the piston or float upward and allowing water to enter the lower chamber. In situations where the pressure exerted on the lower chamber by submergence is great enough to cause the piston or float to move upward prior to achieving the desired sampling depth, the upper chamber can be pressurized to prevent piston movement. The device is then activated by slowly releasing the pressure from the upper chamber, allowing water to fill the lower chamber.

Samples collected with grab samplers, especially various types of bailers, exhibit variable accuracy and precision in sample chemistry, often due to operator technique (Puls et al., 1992; Barcelona et al., 1984; Gillham et al., 1983; Pohlmann et al., 1991; Unwin and Maltby, 1988; Tai et al., 1991). Grab samplers can aerate and/or agitate a sample, causing sample oxidation, degassing, and stripping of VOCs from the sample. Care should be taken to avoid sample agitation during transfer of the sample from a grab sampler to the sample container. Pouring water from the top of a bailer either directly into the sample container or to a transfer vessel may agitate/aerate the sample and cause alteration of sample chemistry. These devices can also increase the turbidity of a sample through the surging action created in the well as the device moves through the water column. Grab samplers generally do not subject the sample to pressure changes, though some change may be imparted to a sample when using a syringe sampler activated with a suction. A potential for sample contamination exists due to exposure of the grab sampling device to the surface environment during repeated removal and reinsertion of the device during use. Also, the suspension cord or cable used with grab samplers could contribute contaminants to groundwater samples (Canova and Muthig, 1991).

Suction-Lift Pumps

Surface centrifugal pumps and peristaltic pumps are two common suction-lift pumps. These pumps are usually placed at or above ground level during purging and sampling. They draw water to the surface by applying suction to an intake line through the use of impellers or rotors typically driven by an electric motor. Surface centrifugal pumps use impellers that are typically constructed of brass or mild steel, plastic, or synthetic rubber. A peristaltic pump consists of a rotor with rollers that squeeze flexible tubing as they revolve within a stator housing. This action generates a reduced pressure at one end of the tubing and an increased pressure at the other end. Several types of elastomeric material can be used for the tubing, although silicone rubber is the most common.

Suction-lift pumps may be unacceptable for some groundwater sampling applications. Exertion of a reduced pressure on the sample can cause volatilization or may result in degassing, which can cause changes in the pH, redox potential, and other gas-sensitive parameters (Barcelona et al., 1983; Ho, 1983; Barker and Dickhout, 1988). Peristaltic pumps may be satisfactory for some analytes that are not affected by changes in the sample that can be caused by application of reduced pressure when used under low-flow rate and low lift conditions (Barcelona et al., 1983; Puls and Powell, 1992; Backhus et al., 1993).

Because surface centrifugal pumps can cause cavitation, they are not appropriate for collection of samples to be analyzed for dissolved gases, VOCs, or gas-sensitive parameters such as trace metals. Because the pumped water contacts the pump mechanism, artifacts from sample

contact with these materials should be considered when evaluating these pumps for sampling. In addition, these pumps can mix air from small leaks in the suction circuit into a sample, which can cause sample bias. These pumps are typically difficult to adequately decontaminate between uses. To avoid the limitations posed by the effects of pumping or undesirable pump materials, an intermediate vessel could be used on the suction side of the pump circuit.

Peristaltic pumps do not usually cause cavitation but, as in all suction-lift pumps, the exertion of a reduced pressure on the sample can bias the sample. The flexible tubing required for use in a peristaltic pump mechanism may also cause sample bias.[2]

Centrifugal Submersible Pumps

A centrifugal submersible pump (CSP) consists of impellers housed within diffuser chambers that are attached to a sealed electric motor, which drives the impellers through a shaft and seal arrangement. Water enters the CSP by pressure of submergence, is pressurized by centrifugal force generated by the impellers, and discharged to the surface through tubing, hose, or pipe. A CSP is suspended in a well by its discharge line and/or a support line. Electric power is supplied to the motor through a braided or flat multiple-conductor insulated cable.

Flow rate and depth capability for all designs are wide ranging. For variable-speed CSPs, the discharge rate can be reduced by regulating the frequency of the electrical power supply and controlling the motor speed to reduce flow rate.

While there is no available peer-reviewed literature addressing the sampling effects of small-diameter variable-speed CSPs on dissolved gases or VOCs, one study found these pumps produced samples for some dissolved metals that were comparable to samples from bladder pumps (Pohlmann et al., 1994). With all CSPs, heat generated by the motor could increase sample temperature, which could result in loss of dissolved gases and VOCs from the sample.

CSPs are only available in diameters that will fit into sampling points 1.75 inches or larger in diameter. CSPs can be damaged when used in silty or sandy water, requiring repair or replacement of pump components and/or motor. If overheating occurs, there are three possible consequences. First, where the motor has internal water or oil in it for improved cooling characteristics, some of this liquid could be released into the sampling point, which could potentially contaminate the sampling point or samples. Because of this, motors that contain oil should not be used if the oil could interfere with the analytes of interest. Further, water used in motors should be of known chemistry. Second, when this type of motor eventually cools, it can draw in water from the sampling point, which could cause future cross-contamination problems. Proper decontamination of the pump should include changing internal cooling fluid if the pump is

---

[2]For example, the plasticizers in flexible PVC can contaminate samples with phthalate esters. The use of silicone rubber tubing, which contains no plasticizers, can obviate this problem; however, the potential for sample bias due to sorption/desorption exists with both materials (Barcelona et al., 1985). These pumps can be used with the intermediate vessel system described above, so that the sample contacts only the intake tubing and vessel, avoiding contact with the pump mechanism tubing. Alternatively, using silicone rubber tubing at the pump head only can minimize this problem (Ho, 1983; Barker and Dickhout, 1988).

to be used in non-dedicated applications. As an alternative, dry sealed motors can be used to avoid these potential problems. Third, extensive or long-term overheating problems may result in motor failure, usually requiring replacement of the motor. CSPs should not be allowed to operate dry, or damage may occur to the pump seals and/or motor. Some CSP designs may be difficult to disassemble in the field for cleaning or repair. For these pumps, if used portably, cleaning is usually performed by flushing the pump and discharge line and washing the exterior surfaces in accordance with ASTM D5088 (ASTM, 2001h).

Gas-Drive Pumps

Gas-drive or gas-displacement pumps are distinguished from gas-lift pumps by the method of water transport. A gas displacement pump forces a discrete column of water to the surface via pressure-induced lift without the extensive mixing of drive gas and water produced by gas-lift devices. Hydrostatic pressure opens the inlet check valve and fills the pump chamber (fill cycle). The inlet check valve closes by gravity after the chamber is filled. Pressurized gas is applied to the chamber, displacing the water up the discharge line (discharge cycle). By releasing the pressure, the cycle can be repeated. A check valve in the discharge line maintains the water in the line above the pump. A pneumatic logic unit, or controller, is used to control the application and release of the drive gas pressure. The lift capability of a gas-displacement pump is directly related to the pressure of the drive gas used.

Although there is a limited interface in gas-displacement pumps between the drive gas and the water, the potential exists for loss of dissolved gases and VOCs across this interface (Barcelona et al., 1983; Gillham et al., 1983). This potential greatly increases if the pump is allowed to discharge completely, which would cause drive gas to be blown up the discharge line. Contamination of the sample may also result from impurities in the drive gas. Typical lifts for gas displacement pumps rarely exceed 250 feet using single-stage compressors; greater lifts can be achieved using two-stage compressors or compressed-gas cylinders. Gas-displacement pumps are available for sampling points as small as 1/2 inch in diameter.

Bladder Pumps

Bladder pumps, also known as gas-operated squeeze pumps or diaphragm pumps, consist of a flexible membrane (bladder) enclosed by a rigid housing. Water enters the bladder under hydrostatic pressure through a check valve at the pump bottom. The inlet check valve closes by gravity after the bladder is filled. Compressed gas is applied to the annular space between the outside of the bladder and pump housing, which squeezes the bladder. This action forces the water out of the bladder and up the discharge line to the surface. By releasing the gas pressure, this cycle can be repeated; a check valve in the discharge line prevents discharged water from re-entering the bladder. In some bladder pump designs, the water and air chambers are reversed, with water entering the annular space between the pump housing and bladder; the bladder is then inflated to displace the water. A pneumatic logic controller controls the application and release of drive gas pressure to the pump. The lift capability of bladder pumps is directly related to the pressure of the drive gas source.

Bladder pumps provide representative samples under a wide range of field conditions. There is no contact between the drive gas and the water in a bladder pump, eliminating the potential for stripping of dissolved gasses and VOCs and the potential for sample contamination by the drive gas. Pressure gradients applied to the sample can be controlled by reducing the drive gas pressure applied to the bladder, thus minimizing disturbance to the sample chemistry. Bladder pumps are recommended for sampling all parameters under a wide variety of field conditions (Parker, 1994; Kearl et al., 1992; Puls et al., 1992; Barcelona et al., 1983; Pohlmann et al., 1991; Unwin and Maltby, 1988; Tai et al., 1991; Pohlmann et al., 1994).

Bladder pump designs are available for use in sampling points as small as 1/2 inch in diameter. Bladder pump flow rates are controlled by adjusting the drive gas pressure or the discharge and refill cycle timing. Where maximum flow rates are too low for purging, secondary purging pumps or packers can be used in conjunction with bladder sampling pumps in order to reduce purge time requirements.

Dual-Acting Piston Pumps

Dual-acting piston pumps consist of a plunger or set of plungers (pistons) moving inside a stationary submerged barrel (cylinder). As the piston travels back and forth in the cylinder, it alternately draws water into the cylinder under suction, then displaces the water from the cylinder. In a dual-acting piston pump, water is simultaneously discharged and drawn in both directions of piston travel. A check valve in each discharge port or in the discharge line is used to prevent discharge water from re-entering the pump. The piston can be cycled manually, or through the use of a pneumatic or mechanical actuator.

Piston pumps can provide representative samples for some parameters (Barcelona et al., 1983; Knobel and Mann, 1993). Samples may be altered due to the suction produced during refill of the pump; this effect is reduced as the pump cycling rate is decreased. Likewise, reducing the pump cycling rate also reduces the pressure applied to the sample, minimizing the potential for sample alteration. If a flow restrictor or valve is used to reduce the discharge rate, the resultant pressure changes could alter sample chemistry (Barcelona et al., 1983; Gillham et al., 1983).

Currently available designs of dual-acting piston pumps will only fit in sampling points that are 2 inches in diameter or larger. The flow rate of a piston pump depends on the inside diameter of the pump cylinder and the stroke length and rate. The ability to control the minimum flow rate for sampling is dependent on the degree to which the stroke rate can be controlled.

Helical Rotor Pumps

Helical rotor pumps, also referred to as progressing cavity pumps, utilize a down-hole rotor and stator assembly driven by an electric motor to displace water through a discharge line to ground surface. Rotation of the helical rotor causes the cavity between the rotor and stator to progress upward, thereby pushing water in a continuous flow upward through the discharge line. In some progressing cavity pumps, the discharge rate can be varied by adjusting the speed of the pump motor between 50 and 500 rpm. The progressing cavity pump is typically suspended in a

well by its discharge line or by a suspension cable. A two-conductor electric cable supplies power from a 12-volt DC power supply and control box to the pump motor.

The operating principle of progressing cavity pumps makes them suitable for collection of samples to be analyzed for VOCs (Imbrigiotta et al., 1988). There is some evidence these pumps may not be suitable for sampling trace metals and other inorganic analytes at higher flow rates due to increased turbidity (Barcelona et al., 1983); to control turbidity, a variable speed pump controller should be used to reduce flow rate. The pressure applied to a sample is directly related to the motor speed, and can be controlled in designs using variable-speed motor controls. Overheating of the motor may raise the temperature of the sample (Parker, 1994).

Progressing cavity pumps require sampling point diameters of at least 2 inches. The relatively low discharge rates attainable with most progressing cavity pumps makes them most useful in applications where purging does not require removal of large volumes of water from monitoring wells. With variable flow rate progressing cavity pumps, once purging is complete the discharge rate may be reduced before samples are collected.

Gear-Drive Pumps

Another type of positive displacement electric submersible pump is the gear-drive pump. In this type of pump, an electric motor drives a pair of PTFE gears. As these gears rotate, their advancing teeth draw water into the pump through the pump intake port and push it through the gears in a continuous flow up the discharge line. The discharge rate can be varied by using the pump controls to adjust the speed of the pump motor. As with many other submersible pumps, the gear-drive pump is usually suspended in a well by its discharge line. Electric power is supplied to the 24-volt DC motor through a cable from the power source and control box at ground surface.

Gear-drive pumps provide good recoveries of dissolved gases, VOCs, trace metals and other inorganics, and mobile colloids (Backhus et al., 1993; Imbrigiotta et al., 1988). However cavitation may occur if the pump is run at high rpm, which could affect dissolved gases or VOCs. The potential for cavitation can be reduced by controlling motor speed. The pressure applied by a gear-drive pump to a sample is directly related to the motor speed, and can be controlled by using the variable-speed motor controls. Gear-drive pumps are constructed of materials acceptable for sampling sensitive groundwater parameters; pump bodies are commonly constructed entirely of stainless steel materials while the gears are constructed of PTFE.

Gear-drive pumps require a sampling point diameter of at least 2 inches. Maximum discharge rates for gear-drive pumps range from more than 3 gallons per minute at lifts of less than 20 feet to 0.25 gallons per minute at lifts of 250 feet. Discharge rates are easily controlled by using the flow control, which adjusts the power supplied to run the pump motor; pump discharge can be adjusted to less than 50 ml/min.

Inertial Lift Pumps

Inertial lift pumps consist of a discharge line (either flexible tubing or rigid pipe) with a ball-check foot valve attached to the lower end of this line. In operation, the pump is lowered into a water column and cycled through reciprocating motion, either through manual action or through the use of a reciprocating mechanical arm mechanism driven by an electric motor or internal combustion engine, to achieve discharge of water. As the pump is moved upward, water that has entered the pump under hydrostatic pressure is lifted upward, held in the pump by the seated foot valve. When the upward motion of the pump is stopped, the inertia of the water column inside the pump carries it up and out of the discharge line. As the pump is pushed downward, the foot valve opens, allowing the pump to refill, and the cycle is repeated to pump water from the sampling point.

Inertial lift pumps can be constructed of any flexible tubing material or rigid discharge pipe that has sufficient strength to tolerate the pump cycling. Typically, these materials include rigid and flexible PVC, PE, PP, and PTFE. Tubing diameters of ¼ inch or ⅜ inch can be used to collect samples from sampling points as small as ½ inch in diameter.

If inertial-lift pumps are cycled rapidly prior to or during sample collection, some loss of VOCs and/or dissolved gasses could occur in the discharge stream. Inertial lift pumps do not cause pressure changes in the sample. However, the cycling action of an inertial lift pump in a sampling point can significantly increase sample turbidity and agitate and aerate the water column within the sampling point. This can result in alteration of concentrations of a wide variety of analytes (including dissolved gases, VOCs, and trace metals) and interference with analytical determinations in the laboratory.

The flow rate of an inertial lift pump is directly related to the cycling rate of the pump. Flexing of the tubing in the sampling point can cause the flow rate to drop. To achieve discharge rates suitable for sample collection, it is necessary to insert a short length of small-diameter flexible tubing into the discharge line to divert a portion of the discharge stream into sample containers.