United States
Environmental Protection
Agency

Office of Research and
Development
Washington DC 20460

EPA/625/R-96/010a
September 1997

EPA

Compendium of Methods for the Determination of Inorganic Compounds in Ambient Air

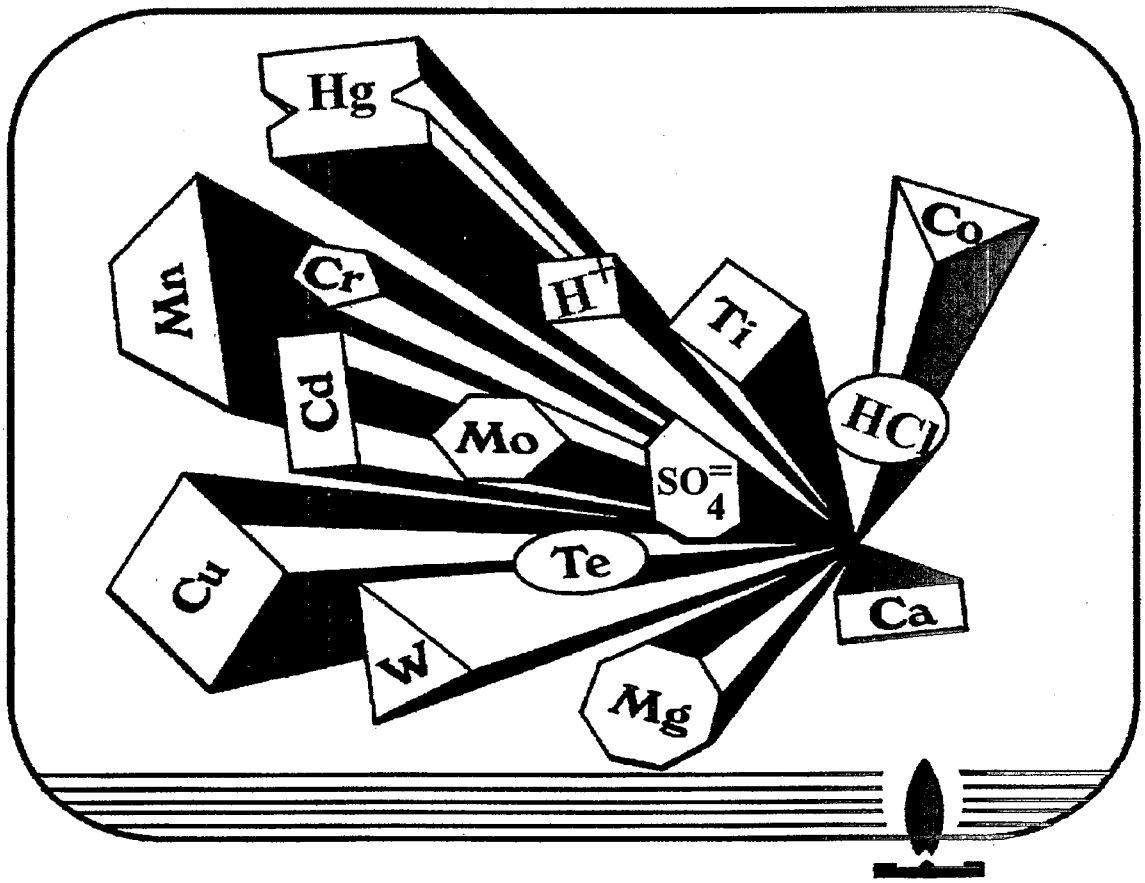

EPA/625/R-96/010a
September 1997

COMPENDIUM OF METHODS FOR THE DETERMINATION OF INORGANIC COMPOUNDS IN AMBIENT AIR

U. S. Environmental Protection Agency
Office of Research and Development
Center for Environmental Research Information
National Risk Management Research Laboratory
Cincinnati, Ohio 45268

Printed on Recycled Paper

DISCLAIMER

The information in this document has been compiled wholly or in part by the United States Environmental Protection Agency (EPA) under contract No. 68-C3-0315, W.A. 2-10 to Eastern Research Group (ERG). The work was performed by Midwest Research Institute (MRI) under subcontract to ERG. It has been subjected to the Agency's peer and administrative review, and it has been approved for publication as an EPA document. Mention of trade names or commercial products does not constitute endorsement or recommendation for use.

TABLE OF CONTENTS

		Page
Acknowledgements		v
Foreword		xi
Chapter IO-1:	**CONTINUOUS MEASUREMENT OF PM_{10} SUSPENDED PARTICULATE MATTER (SPM) IN AMBIENT AIR**	
	OVERVIEW	1.0-1 through 1.0-6
Method IO-1.1:	Determination of PM_{10} in Ambient Air Using the Graseby Continuous Beta Attenuation Monitor	1.1-1 through 1.1-29
Method IO-1.2:	Determination of PM_{10} in Ambient Air Using the Thermo Environmental Inc. (formally Wedding and Associates) Continuous Beta Attenuation Monitor	1.2-1 through 1.2-31
Method IO-1.3:	Determination of PM_{10} in Ambient Air Using a Continuous Rupprecht and Patashnick (R&P) TEOM® Particle Monitor	1.3-1 through 1.3-40
Chapter IO-2:	**INTEGRATED SAMPLING OF SUSPENDED PARTICULATE MATTER (SPM) IN AMBIENT AIR**	
	OVERVIEW	2.0-1 through 2.0-10
Method IO-2.1:	Sampling of Ambient Air for Total Suspended Particulate Matter (SPM) and PM_{10} Using High Volume (HV) Sampler	2.1-1 through 2.1-75
Method IO-2.2:	Sampling of Ambient Air for PM_{10} Using a Graseby Dichotomous Sampler	2.2-1 through 2.2-27
Method IO-2.3:	Sampling of Ambient Air for PM_{10} Concentration Using the Rupprecht and Patashnick (R&P) Low Volume Partisol® Sampler	2.3-1 through 2.3-35
Method IO-2.4:	Calculations for Standard Volume	2.4-1 through 2.4-1

TABLE OF CONTENTS (continued)

		Page
Chapter IO-3:	**CHEMICAL SPECIES ANALYSIS OF FILTER--COLLECTED SUSPENDED PARTICULATE MATTER**	
	OVERVIEW	3.0-1 through 3.0-10
Method IO-3.1:	Selection, Preparation and Extraction of Filter Material	3.1-1 through 3.1-24
Method IO-3.2:	Determination of Metals in Ambient Particulate Matter Using Atomic Absorption (AA) Spectrometry	3.2-1 through 3.2-25
Method IO-3.3:	Determination of Metals in Ambient Particulate Matter Using X-Ray Fluorescence (XRF) Spectroscopy	3.3-1 through 3.3-30
Method IO-3.4:	Determination of Metals in Ambient Particulate Matter Using Inductively Coupled Plasma (ICP) Spectrometry	3.4-1 through 3.4-32
Method IO-3.5:	Determination of Metals in Ambient Particulate Matter Using Inductively Coupled Plasma/Mass Spectrometry (ICP/MS)	3.5-1 through 3.5-35
Method IO-3.6:	Determination of Metals in Ambient Particulate Matter Using Proton Induced X-Ray Emission (PIXE) Spectroscopy	3.6-1 through 3.6-16
Method IO-3.7:	Determination of Metals in Ambient Particulate Matter Using Neutron Activation Analysis (NAA) Gamma Spectrometry	3.7-1 through 3.6-46
Chapter IO-4:	**DETERMINATION OF REACTIVE ACIDIC AND BASIC GASES AND STRONG ACIDITY OF ATMOSPHERIC FINE PARTICLES IN AMBIENT AIR USING THE ANNULAR DENUDER TECHNOLOGY**	
	OVERVIEW	4.0-1 through 4.0-3
Method IO-4.1:	Determination of the Strong Acidity of Atmospheric Fine-Particles (<2.5 μm)	4.1-1 through 4.1-39
Method IO-4.2:	Determination of Reactive Acidic and Basic Gases and Strong Acidity of Atmospheric Fine Particles	4.2-1 through 4.2-67
Chapter IO-5	**SAMPLING AND ANALYSIS FOR ATMOSPHERIC MERCURY**	
Method IO-5:	Sampling and Analysis for Vapor and Particle Phase Mercury in Ambient Air Utilizing Cold Vapor Atomic Fluorescence Spectrometry (CVAFS)	5.0-1 through 5.0-36

Acknowledgements

These Methods were prepared for publication in the *Compendium of Methods for the Determination of Inorganic Compounds in Ambient Air* (EPA/625/R-96/060a), which was prepared under Contract No. 68-C3-0315, WA No. 2-10, by Midwest Research Institute (MRI), as a subcontractor to Eastern Research Group, Inc. (ERG), and under the sponsorship of the U. S. Environmental Protection Agency (EPA). Justice A. Manning and John O. Burckle, Center for Environmental Research Information (CERI), and Frank F. McElroy, National Exposure Research Laboratory (NERL), both in the EPA Office of Research and Development, were the project officers responsible for overseeing the preparation of this Compendium. Additional support was provided by other members of the Compendia Workgroup which include:

- John O. Burckle, U.S. EPA, ORD, Cincinnati, OH
- James L. Cheney, Corps of Engineers, Omaha, NB
- Michael F. Davis, U.S. EPA, Region 7, KC, KS
- Joseph B. Elkins Jr., U.S. EPA, OAQPS, RTP, NC
- Robert G. Lewis, U.S. EPA, NERL, RTP, NC
- Justice A. Manning, U.S. EPA, ORD, Cincinnati, OH
- William A. McClenny, U.S. EPA, NERL, RTP, NC
- Frank F. McElroy, U.S. EPA, NERL, RTP, NC
- Heidi Schultz, ERG, Lexington, MA
- William T. "Jerry" Winberry, Jr., MRI, Cary, NC

These Methods are the result of the efforts of many individuals. Gratitude goes to each person involved in the preparation and review of this methodology.

Chapter IO-1: CONTINUOUS MEASUREMENT OF PM_{10} SUSPENDED PARTICULATE MATTER (SPM) IN AMBIENT AIR

Method IO-1.1: Determination of PM_{10} in Ambient Air Using the Graseby Continuous Beta Attenuation Monitor

Authors:
- William T. "Jerry" Winberry, Jr., Midwest Research Institute, Cary, NC
- Stephe Edgerton, Midwest Research Institute, Cary, NC

Peer Reviewers:
- Richard Shores, Research Triangle Institute, RTP, NC
- David Brant, National Research Center for Coal and Energy, Morgantown, WV
- Charles Rodes, Research Triangle Institute, RTP, NC
- John Glass, SC Department of Health and Environmental Control, Columbia, SC
- Danny France, U.S. EPA, Region 4, Athens, GA
- David Harlos, Environmental Science and Engineering, Gainesville, FL
- Jim Tisch, Graseby, Village of Cleves, OH
- Justice Manning, U.S. EPA, Cincinnati, OH
- William Bope, South Coast Air Quality Management District, Diamond Bar, CA
- Femi Durosinmi, Clark County Health District, Las Vegas, NV
- Rob Ford/Tom Merrifield, Graseby, Atlanta, GA
- Bill Vaughan, Environmental Solutions, St. Louis, MO

Method IO-1.2: Determination of PM_{10} in Ambient Air Using the Thermo Environmental Inc. (Formerly Wedding and Associates) Continuous Beta Attenuation Monitor

Authors:
- William T. "Jerry" Winberry, Jr., Midwest Research Institute, Cary, NC
- Stephe Edgerton, Midwest Research Institute, Cary, NC

Peer Reviewers:
- Rick Taylor, Missouri Department of Natural Resources, Jefferson City, MO
- David Brant, National Research Center for Coal and Energy, Morgantown, WV
- John Glass, SC Department of Health and Environmental Control, Columbia, SC
- Jim Cheney, U.S. Army Corps of Engineers, Omaha, NB
- Charles Rodes, Research Triangle Institute, RTP, NC
- Danny France, U.S. EPA, Region 4, Athens, GA
- David Harlos, Environmental Science and Engineering, Gainesville, FL
- Jim Tisch, Graseby, Cleves, OH
- Al Wehr, Texas Natural Resource Conservation Commission, Austin, TX
- Richard Shores, Research Triangle Institute, RTP, NC

Method IO-1.3: Determination of PM_{10} in Ambient Air Using a Rupprecht and Patashnick Continuous TEOM® Particle Monitor

Authors:
- Erich Rupprecht, Rupprecht and Patashnick, Albany, NY
- William T. "Jerry" Winberry, Jr., Midwest Research Institute, Cary, NC

Peer Reviewers:
- David Brant, National Research Center for Coal and Energy, Morgantown, WV
- John Glass, SC Department of Health and Environmental Control, Columbia, SC
- Jim Cheney, U.S. Army Corps of Engineers, Omaha, NB
- Charles Rodes, Research Triangle Institute, RTP, NC
- Danny France, U.S. EPA, Region 4, Athens, GA
- David Harlos, Environmental Science and Engineering, Gainesville, FL
- Jim Tisch, Graseby, Cleves, OH
- Michael B. Meyer, Rupprecht and Patashnick, Albany, NY
- Richard Shores, Research Triangle Institute, RTP, NC

Chapter IO-2: INTEGRATED SAMPLING OF SUSPENDED PARTICULATE MATTER (SPM) IN AMBIENT AIR

Method IO-2.1: Sampling of Ambient Air for Total Suspended Particulate Matter (SPM) and PM_{10} Using High Volume (HV) Sampler

Author:
- William T. "Jerry" Winberry, Jr., Midwest Research Institute, Cary, NC

Peer Reviewers:
- David Brant, National Research Center for Coal and Energy, Morgantown, WV
- John Glass, SC Department of Health and Environmental Control, Columbia, SC
- Jim Cheney, U.S. Army Corps of Engineers, Omaha, NB
- Margaret Zimmerman, Texas Natural Resource Conservation Commission, Austin, TX

Method IO-2.2: Sampling of Ambient Air for PM_{10} Using a Graseby Dichotomous Sampler

Author: • William T. "Jerry" Winberry, Jr., Midwest Research Institute, Cary, NC

Peer Reviewers:
- David Brant, National Research Center for Coal and Energy, Morgantown, WV
- John Glass, SC Department of Health and Environmental Control, Columbia, SC
- Jim Cheney, U.S. Army Corps of Engineers, Omaha, NB
- Margaret Zimmerman, Texas Natural Resource Conservation Commission, Austin, TX

Method IO-2.3: Sampling of Ambient Air for PM_{10} Using the Rupprecht and Patashnick (R&P) Low Volume Partisol® Sampler

Author: • Erich Rupprecht, Rupprecht and Patashnick, Albany, NY

Peer Reviewers:
- David Brant, National Research Center for Coal and Energy, Morgantown, WV
- John Glass, SC Department of Health and Environmental Control, Columbia, SC
- Jim Cheney, U.S. Army Corps of Engineers, Omaha, NB
- Neil Olsen, Utah Department of Health, Salt Lake City, UT

Method IO-2.4: Calculations for Standard Volume

Author: • William T. "Jerry" Winberry, Jr., MRI, Cary, NC

Peer Reviewers:
- David Brant, National Research Center for Coal and Energy, Morgantown, WV
- John Glass, SC Department of Health and Environmental Control, Columbia, SC
- Jim Cheney, U.S. Army Corps of Engineers, Omaha, NB

Chapter IO-3: CHEMICAL SPECIES ANALYSIS OF FILTER-COLLECTED SUSPENDED PARTICULATE MATTER

Method IO-3.1: Selection, Preparation, and Extraction of Filter Material

Authors:
- Avie Mainey, Midwest Research Institute, Kansas City, MO
- William T. "Jerry" Winberry, Jr., MRI, Cary, NC

Peer Reviewers:
- David Brant, National Research Center for Coal and Energy, Morgantown, WV
- John Glass, SC Department of Health and Environmental Control, Columbia, SC
- Jim Cheney, U.S. Army Corps of Engineers, Omaha, NB
- Dewayne Ehman, Texas Natural Resource Conservation Commission, Austin, TX
- Gary Wester, Midwest Research Institute, Kansas City, MO

Method IO-3.2: Determination of Metals in Ambient Particulate Matter Using Atomic Absorption (AA) Spectrometry

Author:
- William T. "Jerry" Winberry, Jr., MRI, Cary, NC

Peer Reviewers:
- David Brant, National Research Center for Coal and Energy, Morgantown, WV
- John Glass, SC Department of Health and Environmental Control, Columbia, SC
- Jim Cheney, U.S. Army Corps of Engineers, Omaha, NB
- Eric Prestbo, Frontier GeoScience, Seattle, WA
- Anne M. Falke, Frontier GeoScience, Seattle WA
- Gary Wester, Midwest Research Institute, Kansas City, MO
- Margaret Zimmerman, Texas Natural Resource Conservation Commission, Austin, TX
- Doug Duckworth, Martin Marietta Energy Systems, Inc., Oak Ridge, TN

Method IO-3.3: Determination of Metals in Ambient Particulate Matter Using X-Ray Fluorescence (XRF) Spectroscopy

Authors:
- Bob Kellog, ManTech, RTP, NC
- William T. "Jerry" Winberry, Jr., MRI, Cary, NC

Peer Reviewers:
- David Brant, National Research Center for Coal and Energy, Morgantown, WV
- John Glass, SC Department of Health and Environmental Control, Columbia, SC
- Roy Bennet, U.S. EPA, RTP, NC
- Charles Lewis, EPA, RTP, NC
- Ray Lovett, West Virginia University, Morgantown, WV

Method IO-3.4: Determination of Metals in Ambient Particulate Matter Using Inductively Coupled Plasma (ICP) Spectrometry

Author:
- William T. "Jerry" Winberry, Jr., MRI, Cary, NC

Peer Reviewers:
- Dewayne Ehman, Texas Natural Resource Conservation Commission, Austin, TX
- David Harlos, Environmental Science and Engineering, Gainesville, FL
- Doug Duckworth, Martin Marietta Energy Systems, Inc. Oak Ridge, TN

Method IO-3.5: Determination of Metals in Ambient Particulate Matter Using Inductively Coupled Plasma/Mass Spectrometry (ICP/MS)

Author:
- William T. "Jerry" Winberry, Jr., MRI, Cary, NC

Peer Reviewers:
- Doug Duckworth, Martin Marietta Energy Systems, Inc. Oak Ride, TN
- David Brant, West Virginia University, Morgantown, WV
- Jiansheng Wang, Midwest Research Institute, Kansas City, MO

Method IO-3.6: Determination of Metals in Ambient Particulate Matter Using Proton Induced X-Ray Emission (PIXE) Spectroscopy

Authors:
- J. William Nelson, Florida State University, Tallahassee, FL
- Thomas Lapp, Midwest Research Institute, Cary, NC

Peer Reviewers:
- David Brant, National Research Center for Coal and Energy, Morgantown, WV
- John Glass, SC Department of Health and Environmental Control, Columbia, SC
- David Harlos, Environmental Science and Engineering, Gainesville, FL

Method IO-3.7: Determination of Metals in Ambient Particulate Matter Using Neutron Activation Analysis (NAA) Gamma Spectrometry

Author:
- Jack Weaver, North Carolina State University, Raleigh, NC

Peer Reviewers:
- David Brant, National Research Center for Coal and Energy, Morgantown, WV
- Ron Fleming, Department of Nuclear Engineering, University of Michigan, Ann Arbor, MI
- Joseph Lambert, Raleigh, NC

Chapter IO-4: DETERMINATION OF REACTIVE ACIDIC AND BASIC GASES AND STRONG ACIDITY OF ATMOSPHERIC FINE PARTICLES IN AMBIENT AIR USING THE ANNULAR DENUDER TECHNOLOGY

Method IO-4.1: Determination of the Strong Acidity of Atmospheric Fine-Particles (<2.5μm)

Authors:
- William T. "Jerry" Winberry, Jr., Midwest Research Institute, Cary, NC
- Thomas Ellestad, U.S. EPA, RTP, NC
- Bob Stevens, U.S. EPA, RTP, NC

Peer Reviewers:
- Delbert Eatough, Brigham Young University, Provo, UT
- Shere Stone, University Research Glassware Corp., Chapel Hill, NC
- Petros Koutrakis, Harvard School of Public Health, Boston, MA
- J. Waldman, Robert Wood Johnson Medical School, New Brunswick, NJ

Method IO-4.2: Determination of Reactive Acidic and Basic Gases and Strong Acidity of Atmospheric Fine Particles (<2.5μm)

Authors:
- William T. "Jerry" Winberry, Jr., Midwest Research Institute, Cary, NC
- Thomas Ellestad, U.S. EPA, RTP, NC
- Bob Stevens, U.S. EPA, RTP, NC

Peer Reviewers:
- Delbert Eatough, Brigham Young University, Provo, UT
- Shere Stone, University Research Glassware Corp., Chapel Hill, NC
- Petros Koutrakis, Harvard School of Public Health, Boston, MA
- J. Waldman, Robert Wood Johnson Medical School, New Brunswick, NJ

Method IO-4.2: Determination of Reactive Acidic and Basic Gases and Strong Acidity of Atmospheric Fine Particles (<2.5μm)

Authors:
- William T. "Jerry" Winberry, Jr., Midwest Research Institute, Cary, NC
- Thomas Ellestad, U.S. EPA, RTP, NC
- Bob Stevens, U.S. EPA, RTP, NC

Peer Reviewers:
- Delbert Eatough, Brigham Young University, Provo, UT
- Shere Stone, University Research Glassware Corp., Chapel Hill, NC
- Petros Koutrakis, Harvard School of Public Health, Boston, MA
- J. Waldman, Robert Wood Johnson Medical School, New Brunswick, NJ

Chapter IO-5: SAMPLING AND ANALYSIS FOR ATMOSPHERIC MERCURY

Method IO-5: Sampling and Analysis for Vapor and particle Phase Mercury in Ambient Air Utilizing Cold Vapor Atomic Fluorescence Spectrometry (CVAFS)

Authors:
- Gerald Keeler, University of Michigan, Ann Arbor, MI
- Jim Barres, University of Michigan, Ann Arbor, MI

Peer Reviewers:
- Susan Kilmer, Michigan Department of Natural Resources, Lansing, MI
- Eric Prestbo, Frontier GeoSciences, Seattle, WA
- Anne M. Falke, Frontier GeoSciences, Seattle, WA
- Jamie Brown, Supelco Inc., Bellefonte, PA
- Alan Zaffird, International Technology Corporation, Cincinnati, OH

Editorial Reviewers and Document Production

Finally, recognition is given to the following Administrative Services staff of Midwest Research Institute (MRI), whose dedication and persistence during the development of this manuscript has enabled it's production.

- Lisa Mumford, Technical Editor, MRI, Cary, NC
- Frances Beyer, Manager of Administrative Services, MRI, Cary, NC
- Lynn Kaufman, Document Production Coordinator, MRI, Cary, NC
- Debbie Bond, Document Production, MRI, Cary, NC
- Margo Evrenidis, Document Production, MRI, Cary, NC
- Kathy Johnson, Document Production, MRI, Cary, NC
- Lisa Scruggs, Document Production, MRI, Cary, NC
- Cathy Whitaker, Document Production, MRI, Cary, NC

Cover

The cover is printed with permission from Varian Associates Instruments, Palo Alto, CA.

FOREWORD

The U. S. Environmental Protection Agency is charged by Congress with protecting the Nation's land, air, and water resources. Under a mandate of national environmental laws, the Agency strives to formulate and implement actions leading to a compatible balance between human activities and the ability of natural systems to support and nurture life. To meet this mandate, EPA's research program is providing data and technical support for solving environmental problems today and building a science knowledge base necessary to manage our ecological resources wisely, understand how pollutants affect our health, and prevent or reduce environmental risks in the future.

The National Risk Management Research Laboratory (NRMRL) is the Agency's center for investigation of technological and management approaches for reducing risks from threats to human health and the environment. The focus of the Laboratory's research program is on methods for the prevention and control of pollution to air, land, water, and subsurface resources; protection of water quality in public water systems; remediation of contaminated sites and ground water; and prevention and control of indoor air pollution. The goal of this research effort is to catalyze development and implementation of innovative, cost-effective environmental technologies; develop scientific and engineering information needed by EPA to support regulatory and policy decisions; and provide technical support and information transfer to ensure effective implementation of environmental regulations and strategies.

Measurement of inorganic pollutants in ambient air is often difficult, in part because of the variety of inorganic substances of potential concern, the variety of potential techniques for sampling and analysis, and lack of standardized and documented methods. This Compendium is one of three Compendia of methods which provide documented and technically reviewed methodology for determining concentrations of selected pollutants of frequent interest in ambient and indoor air. The methods contained in this Compendium provide sampling and analysis procedures for a variety of inorganic pollutants and suspended particulate matter in ambient air. As with the previous Compendia methods, these methods are provided only for consideration by the user for whatever potential applications for which they may be deemed appropriate. In particular, these methods are not intended to be associated with any specific regulatory monitoring purpose and are offered with no specific endorsement for fitness or recommendation for any particular application, other than for an attempt at standardization.

This publication has been prepared by the Center for Environmental Research Information (CERI) with support from the National Exposure Research Laboratory (NERL) to continue NRMRL's goal of providing technical support and information transfer. It is published and made available by EPA's Office of Research and Development to assist the user community and to link researchers with their clients.

E. Timothy Oppelt, Director
National Risk Management Laboratory

EPA/625/R-96/010a

Compendium of Methods for the Determination of Inorganic Compounds in Ambient Air

Chapter IO-1

CONTINUOUS MEASUREMENT OF PM_{10} SUSPENDED PARTICULATE MATTER (SPM) IN AMBIENT AIR

OVERVIEW

Center for Environmental Research Information
Office of Research and Development
U.S. Environmental Protection Agency
Cincinnati, OH 45268

January 1997

Chapter IO-1
Continuous Measurements of PM_{10} Suspended Particulate Matter (SPM) In Ambient Air

OVERVIEW

Under authority granted in Section 109 of the Clean Air Act (the Act) and its amendments, the U. S. Environmental Protection Agency (EPA) has promulgated primary and secondary national ambient air quality standards (NAAQS) for six criteria pollutants: SO_2, NO_x, CO, O_3, PM_{10} and Pb. These primary (health-related) and secondary (welfare-related) pollutant standards are contained in Title 40, Part 50 of the Code of Federal Regulations (40 CFR 50). The reference methods for monitoring ambient atmospheres for these criteria pollutants are in the Appendices of 40 CFR 50, A through G.

Section 109 of the Act requires EPA to evaluate, at 5-year intervals, the criteria for which standards have been promulgated and to issue any new standards as may be appropriate.

The issuance of reference methods designed to monitor these criteria pollutants has a legal basis in Section 301 of the Act, which states that the regulations necessary to carry out the provisions of the Act may be promulgated by the Administrator. To evaluate and ascertain the status of air quality with regard to the criteria pollutants, uniform analytical methods are used to ensure consistency and accuracy in the data generated.

Suspended particulate matter (SPM) in air generally is considered to be all airborne solid and low vapor pressure liquid particles. Suspended particulate matter in indoor air is a complex, multi-phase system consisting of a spectrum of aerodynamic particle sizes ranging from below 0.01 μm to 100 μm and larger. Historically, particulate matter (PM) measurement has concentrated on total suspended particulates (TSP), with no preference to size selection. The EPA's approach toward regulating and monitoring TSP matter has evolved over time. When EPA first regulated TSP, the NAAQS was stated in terms of particulate matter captured on a filter with an aerodynamic particle size of <100 μm as defined by the TSP sampler. Recently, the primary standard for TSP was replaced with a PM_{10} standard, which includes only particles with an aerodynamic diameter of 10 μm or less. More recently, interest has centered on "respirable" particles (<2.5 μm), those particles small enough to be drawn into and deposited in the respiratory system. Particles in this size range can have direct health effects. The depth to which these particles can penetrate the respiratory system as a function of particle size is shown in Figure 1.

Respirable particles are attributed to growth of particles from the gas phase and subsequent agglomeration; most coarse particle (sizes 2.5-10 μm) are made of mechanically abraded or ground particles. Particles that have grown from the gas phase, either because of condensation, transformation, or combustion, occur initially as very fine nuclei (0.05 μm). These particles tend to grow rapidly to accumulation mode particles around 0.5 μm which are relatively stable in the air. Coarse particles, on the other hand, are mainly produced by mechanical forces, such as crushing and abrasion. These coarse particles therefore normally consist of finely divided minerals, soil, or dust that result from entrainment by the motion of air or from other mechanical action within their area. Since the mass of these particles is normally >3 μm, their retention time in the air parcel is shorter than that of the fine particle fraction.

The EPA is considering further narrowing the primary NAAQS to even smaller particles, those ≤ 2.5 μm in aerodynamic diameter. As shown in Figure 1, these smaller particles penetrate deeply into the lung, where the potential for health effects is the greatest. In addition, the smaller particles typically

are man-made. TSP typically has a bimodal distribution, with naturally occurring particles centered at about 10 μm and man-made particles centered at about 0.4 μm (as shown in Figure 2).

Sampling options for PM_{10} compliance monitoring fall into two categories: "reference" methods and "equivalent" methods. This Chapter, IO-1, "Continuous Measurements of Suspended Particulate Matter (SPM) in Ambient Air," contains the equivalent methods approved for real-time monitoring of PM_{10} mass loading. Chapter IO-2, "Integrated Sampling of SPM," contains the reference methods. The equivalent methods for PM_{10} presented in this chapter are instrumental and provide continuous measurements of ambient PM_{10} concentration. Instruments using two different measurement principles have received EPA's approval as equivalent methods: The first uses Beta-radiation; the second uses an oscillating pendulum. Unlike the reference methods, the equivalent methods allow concentrations to be tracked in real-time. This property is useful when parameters such as the diurnal variation in concentration or the change in concentration associated with certain activities are of interest.

The beta attenuation monitor samples at ambient temperatures, relative humidities, and gas concentrations to minimize particle volatilization biases. These monitors operate at a low-volume flow rate (nominally 16.7 liters/minute [L/min]) using either a virtual impact or cyclonic flow operating principal to determine the 50% cut-point. For beta attenuation monitors, low-energy beta rays (i.e., 0.01-0.1 MeV electrons) are focused on deposits on a filter tape and attenuated according to the approximate expontential function of particulate mass (i.e., Beer's Law). These automated samples employ a continuous filter tape. Typically, the attenuation through an unexposed portion of the filter tape is measured, and the tape is then exposed to the ambient sample flow where a deposit is accumulated. The beta attenuation is repeated, and the difference in attenuation between the blank filter and the deposit is a measure of the accumulated concentration. Blank corrected attenuation readings can be converted to mass concentrations for averaging times as short as 30 minutes. While these monitors are capable of producing half-hourly average mass concentrations, 2-24-hour averaging periods are frequently required with typical ambient concentrations to obtain sufficient particulate deposition for an accurate determination.[1] The two types of beta-gauges are the Graseby Beta-Gauge (Method IO-1.1) and the Thermo Environmental, Inc. (formally Wedding and Associates) Beta-Gauge (Method IO-1.2).

The Graseby monitor directly measures particulate mass at concentrations of 0.005-20 mg/m^3 on a real-time basis. This instrument provides half-hourly and daily averages and allows for subsequent chemical analysis of the particulate samples. With certain specifications, the Graseby instrument has been designated as an equivalent method for determining 24-hour average PM_{10} concentration in ambient air by the EPA under Designation No. EQPM-0990-076, effective September 18, 1990. The monitor described in detail in Method IO-1.1 presents the configuration and operation of the instrument as an equivalent method for PM_{10}.

With the Graseby instrument, ambient air enters the monitor through a PM_{10} inlet head at a flow rate volume of 16.7 L/min. The air containing PM_{10} enters the instrument where it is pulled through the glass fiber filter tape, and the particles are deposited on the tape. Low level beta radiation is emitted from a stainless steel capsule, containing Krypton-85 gas, towards the filter tape containing deposited PM_{10}. The particle matter on the tape reduces the intensity of the beta radiation reaching the measuring

[1] Chow, J.C., "Measurement Methods to Determine Compliance with Ambient Air Quality Standards for Suspended Particles," *J. Air & Waste Manage. Assoc.*, Vol. 45: 320-382, 1995.

chamber on the opposite side of the tape. To compensate for the effect of the filter tape on the reduction of the level of beta radiation, the source directs a second beam of beta particles through a "foil" that mimics clean filter tape to a second measuring chamber (compensation chamber). No air flow is directed to the compensation foil so the effect of the foil on the beta radiation intensity remains constant. The instrument compares the measurement of the compensation foil to the measurement of the filter tape with deposited PM_{10} to determine the mass of the particulate matter. Because changes in temperature, pressure, or humidity can affect PM_{10} measurement on the filter tape, the measurements made through the compensation foil are impacted to the same degree. The foil measurements provide baseline data to compensate for these meteorological effects. This monitor is less sensitive to temperature, pressure, and humidity fluctuations than some other types of continuous particle monitors because the compensation foil measurements provide baseline data. Because the measuring mechanism lacks moving parts, the instrument is not as sensitive to vibrational effects as other types of continuous particulate monitors.

The Graseby monitor has certain limitations or interferences. In high-humidity or rainy climates, water may collect on the filter tape and cause artificially high mass readings. In these same climates where the instrument is housed in an air-conditioned environment, the ambient air inlet tube should be insulated to avoid condensation or the inlet tube heater should be to ensure that any water drawn into the unit is vaporized. For the particular beta particle source used in this instrument, any replacement or maintenance work on the source may be performed only by trained personnel with radiological authorization.

The Thermo Environmental, Inc., beta gauge operates under the same basic principles as the Graseby monitor, but with some differences. This instrument was designated as an equivalent method for PM_{10} by the EPA under Designation No. EQPM-0391-081, effective March 5, 1991. The configuration and operation of this instrument is described in detail in Method IO-1.2. The Thermo monitor can measure ambient mass concentration with a resolution of about 3 $\mu g/m^3$ for a 1-h sampling period. A constant volumetric flow rate for the PM_{10} inlet of 18.9 L/min is used compared to the 16.67 L/min for the Graseby unit. A major difference between the two monitors is the beta source. The Thermo monitor uses a carbon-14 beta source compared to Krypton-85 gas for the Graseby monitor. The carbon-14 source does not require a license by the Nuclear Regulatory Commission, whereas the Krypton-85 does. Apparatus and operational differences between the two instruments are described in Methods IO-1.1 and IO-1.2.

Different from the beta-gauges, the Rupprecht and Pataschnick (R&P) PM_{10} monitor is based upon a tapering element oscillating microbalance (TEOM®) as a filter-based measurement system to continuously measure particulate mass at concentrations between 5 $\mu g/m^3$ and several g/m^3 on a real-time mass monitoring basis. The instrument calculates mass rate, mass concentration, and total mass accumulation on exchangeable filter cartridges that are designed to allow for future chemical and physical analysis. In addition, this instrument provides for hourly and daily averages. This system operates on the principal that particles are continuously collected on a filter cartridge mounted on the tip of a tapered hollow glass element. The element oscillates in an applied electric field. With this monitor, particle-laden air enters through an air inlet and then passes to the sensor unit containing the patented microbalance system. The inlet system may or may not be equipped with an optional sampling head to pre-separate particles at either a 2.5 or 10 μm diameter. The R&P PM_{10} inlet is designed to allow only particulate matter ≤ 10 μm in diameter to remain suspended in the sample air stream as long as the flow

rate of the system is maintained at 16.67 L/min. The monitor can be operated as a TSP monitor or as a PM_{10} monitor.

In operation, the sample stream passes into the microbalance system, which consists of a filter cartridge and oscillating hollow tube, where the stream is heated to a predetermined temperature. The filter cartridge is a 1/2 diameter thin aluminum base (foil-like) assembly. A water resistant plastic cone, which fits onto the oscillating element, is attached to the aluminum base. An automatic flow controller pulls the sample stream through the monitor at flow rates between 0.5 and 5 L/min. The wider end of the hollow element is fixed to a platform and is vibrated at its natural frequency. The oscillation frequency of the glass element is maintained based on the feedback signal from an optical sensor.

As mass accumulates on the filter cartridge, the resonant frequency of the element decreases, resulting in a direct measurement of inertial mass. Based upon the direct relationship between mass and frequency, the monitor's microcomputer calculates the total mass accumulation on the filter and the mass rate and mass concentration in real-time.

The TEOM® monitor is very sensitive to mass concentration changes and can provide precise measurements for sampling durations of 1-h or less. To achieve this level of precision, the hollow glass element must be maintained at a constant temperature to minimize the effects of thermal variations. Because the instrument's primary operating mechanism is the microbalance system, the instrument should be isolated from mechanical noise and vibration. The operating temperature of the element can be lowered to minimize the potential particle loss bias for more volatile compounds but must be maintained above the maximum ambient temperature encountered during the field sampling. The tapered element oscillating microbalance is discussed in detail in Method IO-1.3, Rupprecht and Pataschnick TEOM®.

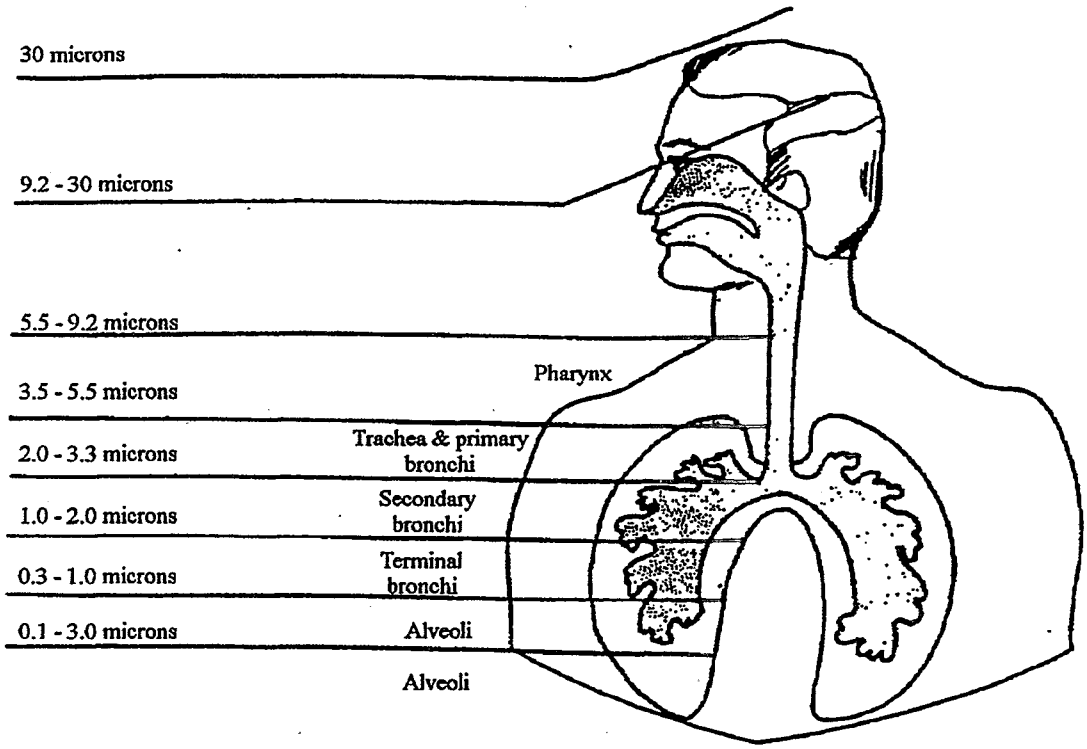

Figure 1. Depth of respiratory system penetration based on particle size.

Source: U.S. EPA, Air Pollution Training Institute (APTI), Course No. 435.

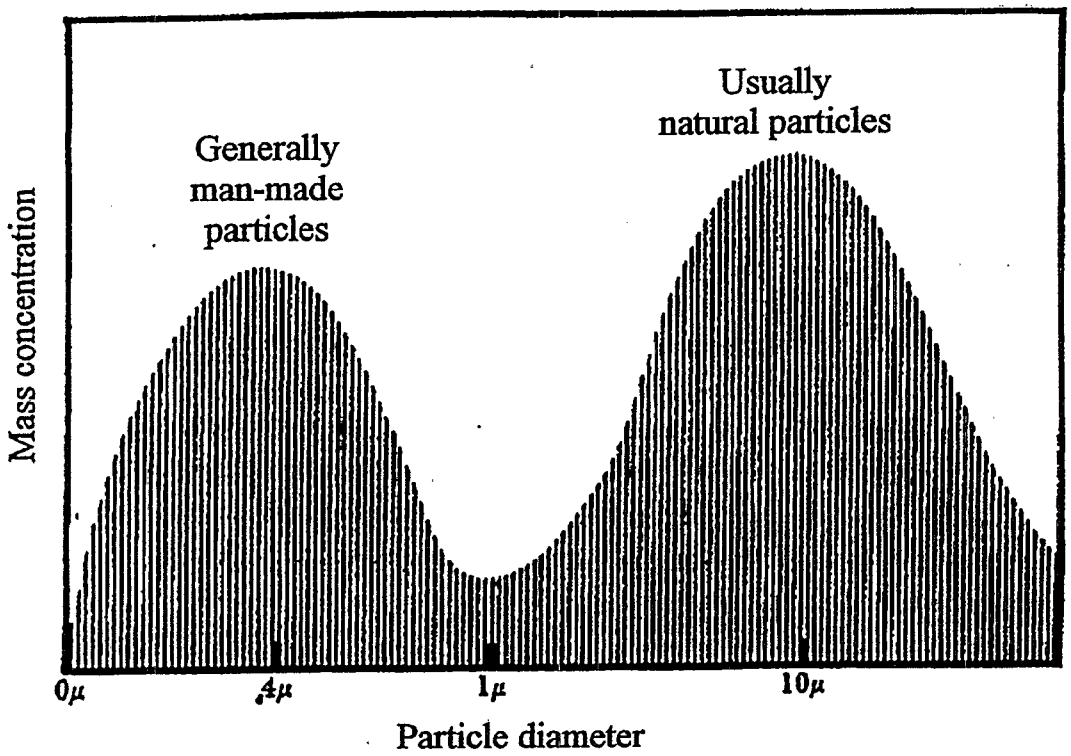

Figure 2. Bimodal distribution of particles in the atmosphere.

Source: U.S. EPA, Air Pollution Training Institute (APTI), Course No. 435.

EPA/625/R-96/010a

Compendium of Methods for the Determination of Inorganic Compounds in Ambient Air

Compendium Method IO-1.1

DETERMINATION OF PM_{10} IN AMBIENT AIR USING THE GRASEBY CONTINUOUS BETA ATTENUATION MONITOR

Center for Environmental Research Information
Office of Research and Development
U.S. Environmental Protection Agency
Cincinnati, OH 45268

January 1997

Method IO-1.1

Acknowledgements

This Method is a part of *Compendium of Methods for the Determination of Inorganic Compounds in Ambient Air* (EPA/625/R-96/060a), which was prepared under Contract No. 68-C3-0315, WA No. 2-10, by Midwest Research Institute (MRI), as a subcontractor to Eastern Research Group, Inc. (ERG), and under the sponsorship of the U.S. Environmental Protection Agency (EPA). Justice A. Manning, Center for Environmental Research Information (CERI), and Frank F. McElroy, National Exposure Research Laboratory (NERL), both in the EPA Office of Research and Development, were the project officers responsible for overseeing the preparation of this method. Other support was provided by the following members of the Compendia Workgroup:

- James L. Cheney, Corps of Engineers, Omaha, NB
- Michael F. Davis, U.S. EPA, Region 7, KC, KS
- Joseph B. Elkins Jr., U.S. EPA, OAQPS, RTP, NC/
- Robert G. Lewis, U.S. EPA, NERL, RTP, NC
- Justice A. Manning, U.S. EPA, ORD, Cincinnati, OH
- William A. McClenny, U.S. EPA, NERL, RTP, NC
- Frank F. McElroy, U.S. EPA, NERL, RTP, NC
- William T. "Jerry" Winberry, Jr., MRI, Cary, NC

This Method is the result of the efforts of many individuals. Gratitude goes to each person involved in the preparation and review of this methodology.

Author(s)

- William T. "Jerry" Winberry, Jr., Midwest Research Institute, Cary, NC
- Stephe Edgerton, Midwest Research Institute, Cary, NC

Peer Reviewers

- Richard Shores, Research Triangle Institute, RTP, NC
- David Brant, National Research Center for Coal and Energy, Morgantown, WV
- Charles Rodes, Research Triangle Institute, RTP, NC
- John Glass, SC Department of Health and Environmental Control, Columbia, SC
- Danny France, U.S. EPA, Region 4, Athens, GA
- David Harlos, Environmental Science and Engineering, Gainesville, FL
- Jim Tisch, Graseby, Cleves, OH
- Justice Manning, U.S. EPA, Cincinnati, OH
- William Bope, South Coast Air Quality Management District, Diamond Bar, CA
- Femi Durosinmi, Clark County Health District, Las Vegas, NV
- Rob Ford/Tom Merrifield, Graseby, Atlanta, GA
- Bill Vaughan, Environmental Solutions, St. Louis, MO

DISCLAIMER

This Compendium has been subjected to the Agency's peer and administrative review, and it has been approved for publication as an EPA document. Mention of trade names or commercial products does not constitute endorsement or recommendation for use.

Method IO-1.1
Determination of PM_{10} in Ambient Air
Using the Graseby Continuous Beta
Attenuation Monitor

TABLE OF CONTENTS

	Page
1. Scope	1.1-1
2. Applicable Documents	1.1-3
2.1 ASTM Standards	1.1-3
2.2 Other Documents	1.1-3
3. Summary of Method	1.1-3
4. Significance	1.1-4
5. Definitions	1.1-4
6. Interferences	1.1-5
7. Apparatus	1.1-6
7.1 Air Inlet	1.1-6
7.2 Central Instrument	1.1-6
7.3 Vacuum Pump	1.1-7
7.4 Accessories	1.1-7
8. Assembly	1.1-8
8.1 Connections	1.1-8
8.2 Startup	1.1-8
9. Installing the Filter Tape	1.1-8
10. Operation and Data Storage	1.1-9
11. System Calibration	1.1-15
11.1 Particle Mass	1.1-15
11.2 Air Flow Rate	1.1-16
11.3 Leak Check	1.1-18
12. Method Safety	1.1-18
13. Maintenance	1.1-18
13.1 Vacuum Pump	1.1-18
13.2 PM_{10} Inlet	1.1-18
13.3 Radioactive Source	1.1-19
13.4 Air Flow Regulator Bleed Valve	1.1-19
14. Performance Criteria and Quality Assurance (QA)	1.1-19
14.1 Standard Operating Procedures (SOPs)	1.1-19
14.2 Quality Assurance Program	1.1-19
15. References	1.1-20

Chapter IO-1
CONTINUOUS PM_{10} ANALYZERS

Method IO-1.1
DETERMINATION OF PM_{10} IN AMBIENT AIR USING THE GRASEBY CONTINUOUS BETA ATTENUATION MONITOR

1. Scope

1.1 The area of toxic air pollutants has been the subject of interest and concern for many years. Recently the use of receptor models has enabled U. S. Environmental Protection Agency (EPA) to identify the elemental composition of atmospheric aerosol into components and relate them to specific emission sources. The assessment of human health impacts resulting in major decisions on control actions by federal, state, and local governments is based on these data. Accurate measures of toxic air pollutants at trace levels are essential to proper assessment.

1.2 Suspended particulate matter (SPM) in air generally is a complex, multi-phase system of all airborne solid and low vapor pressure liquid particles having aerodynamic particle sizes from below 0.01 μm to 100 μm and larger. Historically, SPM measurement has concentrated on total suspended particulates (TSP), with no preference to size selection.

1.3 The EPA reference method for TSP is codified at 40 CFR 50, Appendix B. This method uses a high-volume sampler (hi-vol) to collect particles with aerodynamic diameters of approximately 100 μm or less. The hi-vol samples 40 and 60 ft^3/min of air with the sampling rate held constant over the sampling period. The high-volume design causes the TSP to be deposited uniformly across the surface of a filter located downstream of the sampler inlet. The TSP high volume can be used to determine the average ambient TSP concentration over the sampling period, and the collected material subsequently can be analyzed to determine the identity and quantity of inorganic metals present in the TSP.

1.4 Research on the health effects of TSP in ambient air has focused increasingly on those particles that can be inhaled deeply into the respiratory system, i.e., particles of aerodynamic diameter less than 10 μm. The health community generally recognizes that these particles may cause significant, adverse health effects.

1.5 On July 1, 1987, the EPA promulgated a new size-specific air quality standard for ambient particulate matter. This new primary standard applies only to particles with aerodynamic diameters $\leq$10 micrometers (PM_{10}) and replaces the original standard for TSP. To measure concentrations of these particles, the EPA also promulgated a new federal reference method (FRM). This method is based on the separation and removal of non-PM_{10} particles from an air sample followed by filtration and gravimetric analysis of PM_{10} mass on the filter substrate.

1.6 The new primary standard (adopted to protect human health) limits PM_{10} concentrations to 150 μg/std m^3, averaged over a 24-h period. These smaller particles are able to reach the lower regions of the human respiratory tract and, thus, are responsible for most of the adverse health effects associated with suspended particulate pollution. The secondary standard, used to assess the impact of pollution on public welfare, has also been established at 150 μg/std. m^3.

1.7 Monitoring methods for particulate matter (PM) are designated by the EPA as reference or equivalent methods under the provisions of 40 CFR Part 53, which was amended in 1987 to add specific requirements for PM_{10} methods. Part 53 contains functional specifications and other requirements that reference methods and equivalent method must meet, along with explicit test procedures for candidate methods or samplers. General requirements and provisions for reference and equivalent methods are also given in Part 53, as are the requirements for submitting an application to the EPA for a reference or equivalent method determination.

1.8 Under the Part 53 requirements, *reference methods* for PM_{10} must use the measurement principle and meet other specifications set forth in 40 CFR 50, Appendix J. They must also include a PM_{10} sampler that meets the requirements specified in Subpart D of 40 CFR 53. Appendix J specifies a measurement principle based on extracting an air sample from the atmosphere with a powered sampler that incorporates inertial separation of the PM_{10} size range particles followed by collection of the PM_{10} particles on a filter over a 24-h period. The average PM_{10} concentration for the sample period is determined by dividing the net weight gain of the filter over the sample period by the total volume of air sampled. Other specifications are prescribed in Appendix J for flow rate control and measurement, flow rate measurement device calibration, filter media characteristics and performance, filter conditioning before and after sampling, filter weighing, sampler operation, and correction of sample volume to EPA reference temperature and pressure. In addition, sampler performance requirements in Subpart D of Part 53 include sampling effectiveness (the accuracy of the PM_{10} particle size separation capability) at each of three wind speeds and "50% cutpoint" (the primary measure of 10-micron particle size separation). Field tests for sampling precision and flow rate stability are also specified. In spite of the instrumental nature of the sampler, this method is basically a manual procedure, and all designated reference methods for PM_{10} are therefore defined as manual methods.

1.9 The operational procedures of a continuous PM_{10} monitor that directly measures particulate mass at concentrations of 0.005-20,000 $\mu g/m^3$ on a real-time basis, as illustrated in Figure 1, is described in this method.

1.10 The instrument periodically (averaging ranges from ½ hours to daily) determines total mass accumulation on a filter medium and calculates mass concentration. It uses a continuous filter tape system that reduces the need for frequent manual filter changes and allows for later chemical analysis of the acquired PM_{10}.

1.11 With certain specifications, the instrument has been designated as an equivalent method for determining 24-h average PM_{10} concentration in ambient air by the EPA under Designation No. EQPM-0990-076, effective September 18, 1990 (1). Except as otherwise noted, this protocol addresses the configuration and operation of the instrument as an equivalent method for PM_{10}.

1.12 The methodology detailed in this method is employed by organizations such as the EPA, the Northwest Air Pollution Authority, the Palm Beach County Health Department, and Echo Bay Minerals Company for indoor and outdoor air quality monitoring.

2. Applicable Documents

2.1 ASTM Standards

- D1356 *Definitions of Terms Related to Atmospheric Sampling and Analysis.*

2.2 Other Documents

- *U. S. Environmental Protection Agency Technical Assistance Document* (2).
- *U. S. Environmental Protection Agency Quality Assurance Handbook* (3).
- *Graseby PM_{10} Beta Attenuation Monitor Operator Manual* (4).

3. Summary of Method

3.1 In operation, suspended particles in ambient air are pulled through the PM_{10} inlet head at a flow rate of 16.7 L/min. The inlet head consists of a series of impaction plates to segregate particulate matter by size. Because of the design of the inlet, accurate sampling is accomplished independent of wind speed and direction.

3.2 Air is drawn into the inlet and deflected downwards into the acceleration jet of the impact unit. Because of their greater mementum, particles larger than the 10 micron cutpoint impact out and are retained in the middle plenum impaction chamber, as illustrated in Figure 2. The particle fraction smaller than 10 microns is carried upward by the air flow and down the vent tubes to the beta gauge sampler.

3.3 After traversing the inlet configuration, the PM_{10} particles are deposited on a glass fiber filter tape. A low level of beta radiation is emitted from the source and passes through the filter tape and deposited particles. The increase of particles collected on the tape causes a lower beta-ray measurement in the measuring chamber, as illustrated in Figure 3. This filter-spot position results in a continuous observation of the increasing particulate mass and corresponding concentration. A compensation chamber receives an equal portion of the beta-ray and is used as a reference by comparing the sample measurement in the measuring chamber with transmitted radiation through a compensation chamber foil that exhibits the same absorbtivity as clean filter tape.

3.4 As particles collect on the filter, the differential reading changes, and the signal is converted by a on-board computer to PM_{10} concentrations.

3.5 Changes in temperature, pressure, and humidity affect the PM_{10} measurement on the filter tape; the measurements made through the compensation foil are affected to the same degree. Thus, the foil measurement supplies baseline information to the internal computer that allows the instrument to compensate for environmental effects.

3.6 By measuring the accumulated mass of particles on the tape and the volumetric flow rate of air through the instrument, the instrument can calculate the mass concentration of particles in the ambient air.

3.7 The unit controls allow the user to define the operating parameters of the instrument by menu-driven routines.

3.8 Output from the monitor maybe in the form of visual display, on-board computer storage, telemetry, printout, or storage in an auxiliary disc. Output can be in digital or analog form.

4. Significance

4.1 SPM in outdoor air presents a complex multiphase system consisting of a spectrum of particle sizes ranging in aerodynamic diameter from below 0.01 μm to greater than 100 μm. Historically, the measurement of suspended particulate matter encompassed all suspended particulates, with no preference to size selection. Research on the health effects of TSP in ambient air has focused increasingly on those particles that can be inhaled into the respiratory system (i.e., PM_{10}). Researchers generally recognize that, except for toxic materials, this fraction (<10 μm) of the total particulate loading is of major significance in health effects. As a result, the primary NAAQS for PM is now specified as PM_{10}.

4.2 Because of the health effects of PM_{10}, this continuous particulate monitor has been developed to allow mass measurement of PM_{10} concentration on a real-time basis.

4.3 The monitor utilizes a filter-based measuring system for providing real-time mass monitoring capability. With certain specifications, the monitor has been designated by EPA as an equivalent method for determining the 24-h average ambient concentration of PM_{10}. In addition, the instrument can be operated outside the equivalent method specifications to perform other types of PM sampling programs.

4.4 The particulate sample is retained on the filter tape, allowing for subsequent analysis. The instrument can be equipped with an optional date and time stamper for labeling each sample spot on the filter tape.

5. Definitions

[Note: Terms used in this document are consistent with the definitions found in ASTM D1356. All abbreviations and symbols are defined within this document at the point of first use. Any user-prepared standard operating procedures (SOP) should also conform to the definitions of ASTM D1356.]

5.1 Air Pollution. The presence of unwanted material in the air. The term "unwanted material" here refers to material in sufficient concentrations, present for a sufficient time, and under circumstances to interfere significantly with comfort, health, or welfare of persons or with the full use and enjoyment of property.

5.2 Beta Particle. An elementary particle emitted by radioactive delay, that may cause severe burns.

5.3 Coarse and Fine Particles. Coarse particles are those with diameters (aerodynamic) greater than 2.5 μm that are removed by the sampler's inlet; fine particles are those with diameters (aerodynamic) less than 2.5 μm. These two fractions are usually defined in terms of the separation diameter of a sampler.

5.4 Filter. A porous medium for collecting particlulate matter.

5.5 Mass Concentration. Concentration expressed in terms of mass of substance per unit volume of gas.

5.6 Particle. A small discrete mass of solid or liquid matter.

5.7 Particle Concentrations. Concentration expressed in terms of number of particles per unit volume of air or other gas. NOTE: On expressing particle concentration the method of determining the concentration should be stated.

5.8 Sampling. A process consisting of the withdrawal or isolation of a fractional part of a whole. In air or gas analysis, the separation of a portion of an ambient atmosphere with or without the simultaneous isolation of selected components.

5.9 Sampling, Continuous. Sampling without interruptions throughout an operatoin or for a predetermined time.

6. Interferences

6.1 In high humidity or rainy climates, water may collect on the filter tape, causing artificially high mass readings. In hot, humid environments where the instrument is housed in an air-conditioned shelter, the inlet tube within the shelter should be insulated to avoid condensation. In rainy climates, the instrument's inlet tube heater may be used to ensure that any water drawn into the unit is in vapor phase as it passes through the filter. The heater should be set at the lowest effective temperature to avoid volatilizing any semivolatiles in the PM_{10}. A brief accumulation of water on the filter tape that subsequently evaporates as drier air is pulled through the instrument will cause erroneous short-term readings, but the 24-h average value will not be adversely affected.

6.2 The instrument's primary operating mechanism is the radiometric microbalance system, which relies on changes in the strength of a beta ray beam passing through the filter paper to determine changes in particulate mass collected. Because this mechanism lacks moving parts, the instrument is not sensitive to vibrations (i.e., vacuum pump vibration or mechanical noise) that might hurt the accuracy of some other types of continuous particulate monitors.

6.3 The instrument is also less sensitive to temperature, pressure, and humidity fluctuations than some other types of continuous particulate monitors because of the second beta ray measurement that provides baseline information to the internal computer. Because the instrument compensates for fluctuations in

temperature, the ambient air stream does not need to be heated to a particular standard temperature as long as the ambient air is within the operating range (-20 to 40°C). Heating the ambient air stream can eliminate some semivolatile chemicals that would normally be detected by the instrument, leading to inaccuracies in both mass measurements and later chemical analyses. The heating for moisture control is discussed in Section 6.1.

6.4 The instrument's electronic and mechanical parts should be protected against rain, condensation, and rapid temperature fluctuations.

7. Apparatus

The Graseby Beta Attenuation Monitor is comprised of three main components: the PM_{10} air inlet, the central instrument, and the vacuum pump. In addition, a number of accessories are required. The following sections describe these components.

7.1 Air Inlet

7.1.1 To qualify as an EPA equivalent method for PM_{10}, the instrument must be fitted with a model SA 246b air inlet. When operated at the design flow rate of 1,000 L/h, this air inlet separates particles larger than 10 μm from the airstream, allowing particles smaller than 10 μm to pass into the measurement device for detection. The manufacturer also offers a TSP and fine particle (<2.5 μm) inlets.

7.1.2 As illustrated in Figure 4, the air inlet has an upper and lower assembly. The upper assembly comprises a top plate, deflector, acceleration nozzle, insect screen, and lower plate and rain deflector. The lower assembly comprises a particle collector unit, vent tubes, and water collection jar. An inlet tube also is supplied to connect the PM_{10} inlet to the central instrument.

7.2 Central Instrument

The central instrument is illustrated in Figures 5 and 6 (front and back, respectively). The front of the instrument is sealed with a transparent protective cover, which can be removed by unscrewing the two black knobs on its surface. Removing the cover exposes the measuring chamber, the filter tape advance system, and the operating controls. The controls consist of a liquid crystal display (LCD) and keyboard located in the upper right corner of the front panel. Also located on the front panel is a label indicating that the instrument has been designated by EPA as an equivalent method for PM_{10}. (If this label is not present, contact the manufacturer.) The power switch for the instrument, connection points for power, vacuum tubing, and data input/output devices are located on the back of the instrument. The socket for connecting the inlet tube is located on the top of the instrument. The major components of the central instrument are discussed below.

7.2.1 Filter Tape System. The instrument draws ambient air from the air inlet and inlet tube through glass fiber filter tape, depositing the PM_{10} on the tape. (Glass fiber filter tape must be used for designation as an equivalent method for PM_{10}.) The filter tape system consists of two filter tape reels: the left reel holds the spool of clean tape and the right reel receives the used tape with deposited PM_{10}. The left reel holds up to 42 meters of tape. The internal computer advances the tape according to preset parameters (e.g., mass accumulation limits, pressure or flow rate changes, and timed intervals). The

PM_{10} mass collected on the filter tape is measured, along with the volume of air that has passed through the tape, to determine the concentration of PM_{10} in the ambient air.

7.2.2 Measurement System. The main components of the measurement system (radiometric microbalance) are the radiation source and the measurement and compensation chambers. The radiation source is a stainless steel capsule containing Krypton 85 gas. The measurement chamber is situated above the radiation source and is separated from the radiation source by the spot on the filter tape where the PM_{10} is currently being deposited. The compensation chamber is to the side of the radiation source and is separated from the radiation source by a piece of foil that absorbs approximately the same amount of radiation as clean filter tape. During operation, the radiation source focuses radiation beams towards both the measurement and compensation chambers. The particle-laden filter tape absorbs more radiation than the compensation foil. The difference in measurements indicates the PM_{10} mass collected on the filter.

7.2.3 Flowmeter and Flow Controller. The flow rate of air through the filter tape is an important parameter in the calculation of the ambient PM_{10} concentration. To measure this parameter, an orifice-type flowmeter is located inside the cabinet just prior to the connector for the vacuum tubing to the pump. For proper particle size selection at the PM_{10} inlet, the instrument must maintain a stable flow rate at the design level of 1,000 L/h. To achieve constant flow, the instrument is fitted with an airflow regulator bleed valve interposed in the intake line of the pump. The regulator valve is mounted on the inside of the back of the cabinet with the air intake and air filter on the back panel. The valve servomotor is actuated by thyristors controlled by the internal computer. The system maintains the selected flow rate within a deviation of $\pm 0.5\%$, regardless of changes in temperature, pressure, or pressure drop across the filter (which increases as PM_{10} accumulates). The flow metering and control system is diagrammed in Figure 7.

7.2.4 Internal Computer. The internal computer calculates and records PM_{10} measurements reported by the measurement mechanism. Based on the mass of particles collected and the volumetric flow rate of air, the computer calculates ambient concentration. The computer also serves as an interface between the operator and the instrument. The operator can use the computer to set operating parameters, transmit information about monitored air quality, and perform maintenance operations.

7.2.5 Control Keys and LCD. The control keys and LCD allow the operator to view the measured values and to change the settings of the instrument's operational parameters. The controls are based on a menu system. Above the LCD are a number of small lights that indicate the status of various instrument systems. The keyboard and control system are described more fully in Section 10.1.

7.3 Vacuum Pump

The external vacuum pump is connected to the monitor by a power cord and air hose. When the monitor is in operation, the pump continuously draws 1,000 L/h of ambient air through the monitor. The pump has a rotary vane construction that is known for low maintenance during continuous operation. The pump is fitted with protective filters.

7.4 Accessories

7.4.1 Calibration Kit. Each instrument comes with a set of two calibration foils. During periodic maintenance, these foils are used to recalibrate the instrument. The foils are designed to absorb a certain percentage of the beta ray beam. With the zero foil inserted into the measurement chamber, the instrument is automatically rezeroed. When the span foil is inserted, the calibration "potentiometer" on the control panel is used to adjust the mass reading to the known span foil value. The recalibration

procedure is described in Section 11. The calibration foils are included in EPA's designation of the instrument as an equivalent method for PM_{10}.

7.4.2 Vacuum Tubing. A length of vacuum tubing is supplied to link the central instrument to the vacuum pump.

7.4.3 Power Cord. An unattached power cord is supplied with the instrument. The cord must be attached to the back of the instrument at the appropriate location and plugged into the power supply.

7.4.4 Filter Tape. Two rolls of filter tape are supplied with the instrument. The lifetime of a roll depends on the frequency with which the tape is advanced to a new sampling spot. At 40 meters, each roll has the capacity for about 1,300 sample spots. Normal PM_{10} operation uses 1 to 2 spots in 24 hrs.

7.4.5 Input/Output Connectors. The instrument can be used with a variety of input and output devices. Consult the Operator Manual or the manufacturer for specifics on the options that are available and the appropriate connection cords.

8. Assembly

[Note: When the instrument is used outdoors, protect it from the elements, particularly rain. When the central instrument is installed in the outdoor environmental shelter, be certain the sampler tube leading out of the shelter roof has a watertight fit.]

8.1 Connections

Connection points are numbered on Figures 5 and 6. The following instructions refer to those numbers.

1. Connect the inlet tube to the male connector (1) on the top of the central instrument. Tighten union nut firmly.
2. Connect the pump to the hose socket (26) on the back of the central instrument.
3. Connect the vacuum pump power cord to the back of the central instrument (24).
4. As applicable, connect the selected input and output devices to the appropriate connection points on the back of the central instrument.
5. Connect the power cord to the socket on the back of the central instrument (23) and to a 115 volt (V), 60 Hertz (Hz) power supply.

8.2 Startup

After establishing all connections, the device is ready to use and can be turned on with the power switch (22) on the back of the central instrument. The unit automatically starts a filter change and zero. To prevent soiling of the measuring chambers, install the filter tape immediately after switching on the power if the filter tape has not been installed previously.

9. Installing the Filter Tape

[Note: Upon arrival, a new Graseby Beta Gauge Sampler will already be equipped with filter tape. Follow the procedures outlined below to prepare the instrument for operation. Follow these same procedures to replace used filter tape reels.]

9.1 Switch the sampler power on if this has not yet been done.

9.2 Remove the front cover of the sampler.

9.3 Unscrew and remove the nut from the left reel spindle and place a new filter tape reel on the spindle. Place the reel so that it will turn counter clockwise as the tape unwinds.

9.4 Press the BACK key on the keyboard until the LCD reads "Maintenance and Calibration." (Additional information on the operation of the control keys is presented in Section 10.1.)

9.5 Press the YES key and then the NO key to enter interactive maintenance mode.

9.6 Press the NEXT key and then the YES key to switch the vacuum pump off.

9.7 Press the NEXT key and then the YES key to raise the measuring head.

9.8 Unwind about 1 meter of filter tape and thread it around the rollers and through the gap in the dust collection chamber as shown in Figure 5.

9.9 Unscrew and remove the nut from the right reel spindle. Place an empty filter tape reel on the spindle. Secure the free end of the filter tape to the empty reel with adhesive tape.

9.10 Rotate the empty reel counter-clockwise to remove slack from the filter tape between the reels.

9.11 Return the nuts to both spindles.

9.12 Initiate the filter change cycle by pressing the FC + Z control key (right key).

9.13 The instrument will sense if the feed reel does not turn (i.e., if the feed reel is empty or if the slack has not been taken out of the tape between the reels). Consequently, the pump will not switch on after the filter change. If the pump does not come on, check the filter strip tension and initiate another filter change cycle or switch the pump on with the control keys (see Section 10.1).

10. Operation and Data Storage

[Note: After the filter tape has been installed, the appropriate operating parameters must be set using the control system. The functioning of the control system is explained below in Section 10.1, and the initial settings are discussed in Section 10.2. Additional topics are covered in Sections 10.3 through 10.7. The manufacturer presets all PM_{10} parameters at the factory except local time, elevation and outputs.

The instrument can be operated within an ambient temperature range of -20 to +40°C. Storage and transport are possible without damage within a temperature range of -30 to +60°C. The instrument should be protected from rain, condensation, and rapid temperature fluctuation during operation.]

10.1 Control System

10.1.1 The control keyboard and status lights are illustrated in Figure 8. The control menu tree is diagrammed in Figure 9. By moving through the menu, the control keys can be used to view measured values on the LCD or to change the operating parameters of the instrument.

10.1.2 Keyboard/Interface Enable.

10.1.2.1 The keyboard and data interface are enabled alternatively. In normal operating mode, the "On line" status light is lit. Under these conditions, the keyboard is disabled. No parameters can be changed and a filter change cannot be initiated manually. The serial and parallel interface are active.

10.1.2.2 When the concentration value is displayed on the LCD, the keyboard can be enabled by the key sequence YES, NO, NEXT. (See Figure 8 and Sections 10.1.2 through 10.1.4 for information about the control keys.) This sequence enables the keyboard and disables the control via the interfaces. (The keyboard also can be enabled from the first screen under the "Maintenance and Calibration?" parameter group.) The "On line" status light is switched off. All parameters can be changed with UP and DOWN. Filter change and printout can be initiated with the FC + Z key.

10.1.2.3 If no key is struck for 4 min, the device reverts automatically to normal operating mode. The keyboard is disabled, and interfaces are enabled again. The keyboard can also be disabled from the first screen under the "Maintenance and Calibration?" parameter group.

10.1.3 The two keys on the left have a dual function, depending on the LCD display.
Parameters shown on the display can be altered:
DOWN key for lower values,
UP key for higher values.
A question asked on the display can be answered with YES or NO.

10.1.4 The next two keys (BACK and NEXT) are used for interactive and display control. The NEXT key advances to the next dialog text; the BACK key backspaces. Pushing the NEXT key will consecutively call up the following text and displays on the LCD (see Figure 9).

(1) DUST CONCENTRATION: XXX μg/m3
(2) DUST MASS: XXX μg
(3) OBSERVING TIME:
(4) THRESHOLDS?
(5) DATE/TIME 86-02-19 8:45:23 (EXAMPLE)
(6) LAST CHANGE 90-08-22 13:12 (EXAMPLE)
(7) CHANGE FILTERSTRIP?
(8) CALIBRATION FACTORS AND AIR FLOW RATE?
(9) OUTPUTS?
(10) MAINTENANCE AND CALIBRATION?

The first two points above are measured value displays. Lines 3-10 are the beginnings of parameter groups. In Group 10, it is possible to implement all action necessary for maintenance and calibration (e.g., raise measuring head).

When a parameter group heading is being displayed, press the YES key to access the parameter group; press the NEXT key to advance the parameters, displays, or questions within the group; or press the BACK key to reverse the process.

Example: If the LCD reads "Change Filterstrip ?", the following texts will be called up by the key sequence YES, NEXT, NEXT, NEXT, NEXT, NEXT (see Figure 9):

CHANGE FILTERSTRIP?		YES
FILTER CHANGE IF MASS	>2,400 μg	NEXT
CHANGE IF PRESSURE	>300 kPa	NEXT
CHANGE IF FLOW RATE	<950 l/h	NEXT
FILTER CHANGE BY CYCLE:	420 min	NEXT
FILTER CHANGE BY TIME:	24:00 h	NEXT
CALIBRATION FACTORS AND AIR FLOW RATE?		

Each displayed parameter can be altered by means of the UP and DOWN keys. When the NEXT key is struck, the edited value is entered. When the BACK key is struck, edited values are not entered.

10.1.5 The right key is labeled "FC + Z/PRINT." The function of this key depends on the status of the interactive system. Pressing this key initiates a filter change and zeroing sequence except when the system is accessing the digital interface; then, depressing this key causes the preset parameters to be printed.

10.2 Initial Settings

After the filter tape has been installed (see Section 9), set the appropriate operating parameters for the instrument. If the instrument was purchased to operate as an EPA equivalent method for PM_{10}, a label should be on the front of the central instrument showing this designation, and the parameter settings should be correct when the instrument is turned on. (If the equivalent method designation label is not present, contact the manufacturer to determine whether the instrument can be operated as an equivalent method.) Follow the instructions below to verify that the operating parameters are set properly and to correct any that are wrong. See Figure 9 for the menu tree diagram to facilitate movement through the control system software.

10.2.1 Enable Keyboard. Enable the keyboard as discussed in Section 10.1.1. (This action will disable the serial and parallel interfaces.) The "On line" status light will go out when the keyboard is enabled.

10.2.2 Observing Time. After the keyboard has been enabled, press the NEXT key until the LCD displays "OBSERVATION TIME: CON VARIABLE = N CONST = Y." Press the YES key to select a constant observing time. Display shows "EPA - MODE: NO." Press NEXT key, UP and DOWN keys to set observing time at 60 minutes. This is a required setting for equivalent method for PM_{10}. Press the NEXT key to enter this value.

10.2.3 Date/Time. Press the NEXT key until the LCD reads "Date/Time." If the displayed date and time are correct, proceed to Section 10.2.4. If the date and time are not correct, enter this parameter group by pressing the YES key. Set the correct year using the UP and DOWN keys, then press NEXT to advance to "month." Use the UP and DOWN keys to set the correct month and press NEXT to advance to "day." Proceed in this manner until the year, month, day, hour (24-h clock), minute, and second have been set. After the second has been set, press NEXT to enter the new date and time into the instrument.

10.2.4 Automatic Filter Change. Press the NEXT key until the LCD reads "Filter Change?" and press the YES key to enter this parameter group. In this group, the user sets parameters that

automatically initiate a filter tape advance. For each parameter, use the UP and DOWN keys to set the desired value and press the NEXT key to enter the selected value and advance to the next parameter. See Table 1 for the sequence of parameters.

10.2.5 Calibration Factor. Press the NEXT key until the LCD reads "Calibration and Air Flow Rate?" and press the YES key to enter this parameter group. The LCD will read "Calibration Factor." Use the UP and DOWN keys to set this parameter at 2400, which is a required setting for the equivalent method for PM_{10}. Press the NEXT key to enter this value.

10.2.6 Standard Volume. When the NEXT key is pressed to enter the required calibration factor, the menu advances to the screen for selecting the terms in which the PM_{10} concentration will be expressed. Press the NO key to toggle back and forth between EPA standard conditions (298 K, 1013 kilopascals [kPa]) and scientific STP (273 K, 1013 kPa). Press the YES key to select actual operating conditions. When the LCD shows the desired terms (generally EPA standard conditions), press the NEXT key to enter the selection.

10.2.7 Elevation. When the NEXT key is pushed to enter the desired terms for concentration, the menu advances to the screen for entering the "altitude above sea level" (in meters) at which the instrument will be operated. Use the UP and DOWN keys to set this parameter. This value is used by the instrument to calculate the theoretical ambient barometric pressure at the monitor site to determine the flow rate. (The instrument does not directly measure the ambient barometric pressure.) See Section 3.6.1 of the Operator Manual for the details of the calculation. If desired, the user can calculate the elevation that corresponds to the seasonal average barometric pressure at the site and enter this elevation in place of the actual elevation. When the desired elevation has been set, press the NEXT key to enter the selection.

10.2.8 Air Flow Rate. When the NEXT key is pressed to enter the desired elevation, the LCD will display the current measured value for the flow rate. Press the YES key to advance the menu to the screen where the flow rate can be set; use the UP and DOWN keys to set the **flow rate** at **1,000 L/h. (This is a required setting for the equivalent method for PM_{10}.)** Press the NEXT key to enter the required flow rate.

10.2.9 Flow Rate Minimum and Maximum. The EPA sampling guidelines require that the actual flow rate be within $\pm 10\%$ of the nominal flow rate. The next two LCD screens allow the user to set the minimum and maximum acceptable flow rates. If the measured flow rate is outside the acceptable range, the green "Air Flow" status light goes out and the yellow status light comes on. In addition, the electronic output will indicate an "alarm" status for the air flow rate.

When the NEXT key is pressed to enter the required air flow rate (Section 10.2.8), the menu advances to the screen for entering the minimum acceptable flow rate. Use the UP and DOWN keys to set this parameter to 900 L/min. Press the NEXT key to enter this value and to advance to the menu screen for entering the maximum acceptable flow rate. Use the UP and DOWN keys to set this parameter to 1,100 L/min. Press the NEXT key to enter this value.

10.2.10 Inlet Heater Temperature. When the NEXT key is pressed to enter the maximum acceptable flow rate, the menu advances to the screen for entering the desired inlet tube heater temperature. This heater should be used only as necessary in rainy climates to prevent water from collecting on the filter tape (see Section 6.1). The minimum effective temperature should be used. Use the UP and DOWN keys to set the desired temperature (0°-100°C) and press the NEXT key to enter the selected value. Turn the heater on with the switch in the upper left corner of the front panel (see Figure 5).

10.2.11 Outputs. A variety of output devices (analog or digital) can be used to record measured values and monitor the instrument's operation. The appropriate output settings will depend upon the device(s) used and the data desired. Press the NEXT key until the LCD reads "Outputs" and press the YES key to enter this parameter group. Consult the Operator Manual (Section 4.1.10) to determine the appropriate settings for each individual instrument setup.

10.2.12 Reset Measuring Cycle Buffer. When beginning operation for the first time or after a significant break in operation, the existing measuring cycle buffer should be deleted so that computed concentrations will reflect only current ambient conditions. Press the NEXT key until the LCD reads "Maintenance and Calibration?" and press the YES key to enter this parameter group. Press the NEXT key five times to reach the "Measuring Cycle" screen. Press the YES key to reset the buffer. The "On" status light will flash for ½ h, then burn constantly. The concentration will not be computed and displayed until 6 min have passed.

10.2.13 Disable Keyboard. Disable the keyboard as discussed in Section 10.1.1. This action will enable the serial and parallel interfaces. The "On line" status light will come on.

10.3 Other Menu Functions

A number of other functions can be carried out using the enabled keyboard. See the Operator Manual (Section 4.1) for details.

10.4 Summary of Instrument Operation

Automatic operation is accomplished in a microprocessor controlled cycle with four phases: filter change, mass zero balance, concentration zero balance, and measurement.

10.4.1 Filter Change. The pump shuts off automatically, and the particle collection chamber lifts off the filter tape. The filter feed advances a fresh, unused section of the filter tape under the particle collection and measuring chamber (increment 30 mm). This process lasts exactly 30 s. During this phase, the "Filter change" status light blinks rapidly. The integrated filter tape controller ensures that the pump is shut off automatically if the filter tape breaks or the end of the tape is reached.

10.4.2 Mass Zero Balance. The mass readout is zeroed automatically with the particle collection chamber closed and pump switched on. This balance is carried out in a processor-controlled cycle. The ionization chamber amplifier is fed an offset voltage until the amplifier output supplies zero volts. This balancing takes 90 sec. During this phase, the "Filter change" status light blinks slowly.

10.4.3 Concentration Zero Balance. During this phase, the sampling cycle for particle mass values has already started, but no new concentration value is yet computed. The first six measured mass values are used to determine the starting point for the new particle mass/time curve, and the difference between this point and the end point before the filter change is subtracted from the old curve. With this correction, the old measured values (from before the filter change) can continue to be used after the filter change so that the observing time is not altered and continuous concentration readout is possible, even during the period of filter change. This phase constitutes 10% of the observing time, which is 6 min when the instrument is operated as an EPA equivalent method for PM_{10}. The "Filter change" status light is lit continuously during this phase. All output channels display the last computed concentration value from before the filter change during all three filter change phases.

10.4.4 Measurement Phase. After the zero balances, the routine particle collection and measurement process commences. A current particle concentration value is computed 60 times per observing time from the increasing mass. To qualify as an EPA equivalent method, the observing time must be set to

60 min, which results in a particle concentration value being calculated every 1 min. The current particle mass and concentration values pass continuously to the output channels. The measurement phase is terminated by the next filter change. This phase may last from a few minutes to several days depending on which parameters are selected to initiate the filter change cycle. (For the PM_{10} equivalent method, a filter change must be carried out each midnight.) The instrument repeats the cycle discussed above when the preset conditions for a filter change are met.

10.5 Data and Measured Value Memory

The instrument manages four measured value files that all take the form of cyclic memories. The memories are only erased if an error has been found in the random access memory (RAM) after connection of power supply. Normally, the last 40 or 60 blocks of data are always stored. The file contents can be displayed on the LCD or output via the serial interface.

10.5.1 Measured Values. The current measured values are always entered in File 1 after execution of the print cycle.

Block structure:

- date/time of day
- concentration
- particle mass
- observing time
- analog 1
- analog 2

In the case of a print cycle time of 0 min, no entry will take place. The measured value file contains 40 blocks.

10.5.2 Half-hour averages (Total of 60 half-hour averages are stored). The half-hour averages of PM_{10} concentration and of the two analog channels are computed. Totalling for averaging is carried out once per second if the air flow rate is not disturbed, the filter tape has not broken, and the measured value buffer memory is at least half full. Entry in File 2 takes place every half hour.

Block structure:

- date/time of day
- concentration
- analog 1
- analog 2

The half-hour average file contains 60 blocks, with the newest data replacing the oldest.

10.5.3 Daily Averages (Total of 40 daily averages stored, midnight to midnight). The daily averages of concentration and of the two analog channels are obtained from the sum of the half-hour averages divided by their number. Entry in File 3 always takes place at the end of a day at 24:00 h. The date belonging to a data block is entered at the beginning of the day at 00:00 h.

Block structure:

- date
- concentration
- analog 1
- analog 2

The daily average file contains 40 blocks, with newest data replacing oldest.

[Note: analog 2 = air flow [L/h]]

10.5.4 Histogram Memory. At the end of a day at 24:00 h, the half-hourly averages of the past day are divided into 21 concentration classes. A histogram is formed for dust concentration. The level of the concentration classes is specified by the histogram threshold. A "3" in the first class signifies three half-hourly averages of the day were between 0 $\mu g/m^3$ and the threshold value. A "5" in the second class signifies 5½ averages of the day were between 1 and 2 times the value of the histogram threshold. (See Operator Manual Section 4.1.9 for information on selecting the histogram threshold value.)

Block structure:

- date
- histogram threshold
- 21 concentration classes

The histogram file contains 40 blocks.

10.6 Data Output

The measured values averaged by the instrument are passed to several output channels. The channels are discussed below.

10.6.1 LCD Display. In its basic state, the LCD display will always show the averaged PM_{10} particle concentration value. Pressing the NEXT key also allows the display of the collected particle dust mass. For test purposes, it is possible to call up all 8 analog channels simultaneously on the display.

10.6.2 Analog Outputs, Chart Recorder. Analog outputs for PM_{10} concentration and dust mass are available to record the measured value with analog chart recorders. Voltage outputs of 0-10 V as well as potential-free current outputs (0-20 mA, offset 0, 2 or 4 mA) are available. It is possible to choose linear or logarithmic output. The full-scale and zero-point voltages for the output range may also be selected. (See Operator Manual Section 4.1.10.1 for information on analog output settings.)

10.6.3 Serial Interface, Printer. Data and measured values can be passed to a printer or computer via this interface. Output takes place in 7 bit ASCII code with even parity and 2 stop bits. Commercially available printers with suitable interface can be connected. With the print format selections, the data that will be output may be selected. With the print cycle selections, the printout frequency may be determined. (See Operator Manual Section 4.1.10.2 for information on setting the print format and print cycle.)

10.7 Remote Control

All control functions for the instrument can be accomplished from a remote location using the serial interface. See Operator Manual Section 4.2.1 for information and control codes. Limited remote control functions can be accomplished using the parallel interface. See Section 4.2.2 of the Operator Manual for information.

11. System Calibration

11.1 Particle Mass

The instrument has been factory calibrated with a primary particle generator. The "calibration factor" has been preset to a standard of 2,400 μg (2,400 μg corresponds to +10V at the amplifier or analog output). Mass readings are compared between the standardized particle generator and the instrument.

When factor calibration has been completed, the instrument is checked with a factory set of "mother" foils. Zero and high mass readings are checked to insure good factory agreement, and a factory test certificate is included with the instrument.

11.1.1 Mass Measurement Function Check. A function check should be conducted after starting the instrument, after maintenance activities, or when the measurement system may not be working properly.

11.1.1.1 Remove the test probe from its holder on the face of the instrument and insert the probe into the aperture on the measuring chamber (see Figure 5).

11.1.1.2 After 1 min, the displayed concentration or mass value should rise significantly. This indicates that the measurement system is functioning.

11.1.1.3 After completing the function check, remove the test probe from the measuring chamber! The probe should be stored in the holder provided on the instrument.

11.1.2 Mass Calibration Using Zero/Span Foil Kit. Calibrate the instrument every 2-3 months and after repairs with the calibration foils. **Do not touch the calibration foil sheets; additional oil or dust on the foil may change the mass calibration. The foils must be kept in their original storage box.**

11.1.2.1 Raise the measuring head as directed in Section 9 for installing the filter tape (Sections 9.1 through 9.7). It is important to turn off the vacuum pump to prevent foil damage.

11.1.2.2 2. With the chamber raised, remove the filter tape from the dust collection point and insert the guide bar (included in the calibration kit) between top and bottom chamber from the front. (Inserting the guide bar requires some force; this will not harm the spring-loaded upper chamber.)

11.1.2.3 Insert the foil holder with the zero foil.

11.1.2.4 Press the NEXT and YES keys; lower the chamber and initiate zero. To switch to offset and mass display, press the NEXT key again.

11.1.2.5 After completion of zeroing ("Filter change" status light stops blinking and main on), remove the zero foil and insert the calibration span foil.

11.1.2.6 Wait at least 4 min until the measured value has stabilized (can be read best on a chart recorder). Compare the LCD value to the value inscribed on the span foil.

11.1.2.7 If the LCD value does not agree with the value on the span foil, adjust the instrument using the "Calibration" potentiometer on the front panel of the instrument (note value). Repeat steps 3 through 6.

11.1.2.8 Following adjustment, remove the foil holder and guide bar, raise the measuring head again, re-insert the filter tape, and press FC + Z.

[Note: Be sure to turn on the pump and disable the keyboard to provide data output.]

11.2 Air Flow Rate

The particle size separation characteristics of the Graseby PM_{10} inlet require that specific volumetric air flow rates be maintained during operation. Particle laden air passing through the inlet is forced to take a sharp turn upon entry. A change in the inlet entrance velocity will result in a change in the nominal particle size collected. For this reason, the air flow rate must be maintained at a constant air flow rate of 16.7 actual L/min (1 m^3/hr) $\pm 10\%$.

11.2.1 Flow Rate Audit. To insure an accurate measurement of PM_{10} concentrations, the EPA stipulates air flow rate audit frequencies for all samplers used to report data into the national data base. Please refer to *Quality Assurance Handbook for Air Pollution Measurement Systems*, Volume 2, Section 2.10 for basic requirements. The instrument's air flow rate should be checked upon installation,

after maintenance activities, and at routine intervals throughout the year (at least once per calendar quarter).

11.2.1.1 Several commercially available air flow rate measurement standard devices are available. The manufacturer recommends a (calibrated) dry gas test meter with a display that is easily read to tenths and preferably hundredths of a liter. A dry gas test meter has a low pressure drop across the meter and is reproducible, rugged, and relatively inexpensive. Other measuring devices may be used; however, the manufacturer does not recommend mass flow meters with high pressure drop across the meter.

11.2.1.2 The SA 247 air flow rate measuring cap is used to replace the SA 246b PM_{10} inlet to audit the air flow rate. Remove the SA 246b inlet and place the SA 247 cap with hose barb connector on top of the inlet drift tube. An O-ring seal inside the SA 247 air flow measuring cap assures an airtight seal. Attach a leak-free vacuum hose from the hose barb on the cap to the outlet side of the dry gas test meter. Open the inlet side of the dry gas test meter to the atmosphere for no resistance.

11.2.1.3 Set the instrument to measure flow rate in terms of actual operating conditions (see Section 10.2.6). Use the dry gas test meter and a stopwatch to measure the flow rate of the instrument. If the dry gas test meter is calibrated in units of standard volume at EPA reference conditions (298K, 1013 kPa), use a thermometer and barometer to measure the actual ambient air temperature and pressure so that the measured flow rate in standard units (std L/h) can be converted to actual units (actual L/h) using the following equation:

$$Q_a = Q_{std}\,(P_{std})/(T_{std})(T_a/P_a)$$

where:

Q_a = measured flow rate in actual L/hr.
Q_{std} = measured flow rate in std L/hr.
P_{std} = EPA reference pressure (1013 kPa).
T_{std} = EPA reference temperature (298K).
T_a = actual ambient temperature (K).
P_a = actual barometric pressure (kPa).

11.2.1.4 To insure a good reproducible air flow rate measurement, the time from start to stop of an audit with the dry gas test meter should be 10 min. While the air flow rate audit is being made with the dry gas test meter, monitor the air flow rate indicated by the instrument.

11.2.1.5 Compare the air flow rate measured with the dry gas test meter to the instrument's preset air flow rate (design flow rate of SA 246b inlet = 1,000 actual L/h) and to the sampler indicated flow rate. If the audited air flow rate differs from the set or indicated flow rates of the instrument by more than 10%, contact the manufacturer for assistance and service.

11.2.2 Flow Rate Calibration.

11.2.2.1 As discussed in Section 7.2.3, the air flow rate for the instrument is held constant (within $\pm$0.5%) using a regulator valve that is adjusted based on input from the instrument's flow rate measurement system.

11.2.2.2 The manufacturer recommends no periodic recalibration by the user. However, the field audit described in Section 11.2.1 is required quarterly for any instrument operating as an EPA equivalent method for PM_{10}.

11.3 Leak Check

The manufacturer has not developed any recommended leak checking procedures. Do not put the system under high positive or negative pressure; damage to the measurement system could result.

12. Method Safety

This instrument uses a radioactive source to measure PM_{10}. Only trained personnel with radiological authorization, e.g., by the Graseby Service Division may work on the source (e.g., cleaning the measuring chambers). The source has been secured with tamper-proof hardware and may not be disassembled without authorization.

13. Maintenance

To ensure proper instrument performance, the following maintenance steps must be consistently followed.

13.1 Vacuum Pump

The vacuum pump is the reliable rotary vane vacuum pump (multi-chamber system) with a dry rotor, which is known for its minimal maintenance during continuous service. The pump is supplied as an external unit and is fitted with protective filters.

13.1.1 Protective filter 1 in the suction line is used to protect the pump inlet. If the pump runs for any length of time with a defective sample filter strip or without any sample filter strip at all, check or replace the pump inlet filter. If a dirty pre-filter in the pump if the carbon vanes are intact and the pump does not reach the necessary air delivery rate may be the cause.

13.1.2 Protective filter 2 is mounted on the vacuum pump exhaust and is used to collect the worn carbon vane dust and act as a noise muffler for the vacuum pump. The cloth filter in the pump exhaust should be removed, soap and water cleaned and dried, and replaced each 6 months of pump operation.

13.1.3 Because the pump normally operates with pre-filtered air, carbon vane wear is very slight. The life of a set of carbon vanes is typically more than 1 yr. For this reason, check the carbon vanes at intervals of 2,000-3,000 operating hours (i.e., 3 months) or change yearly. The rotary pumps should be maintained in accordance with the instructions of the pump manufacturer.

13.2 PM_{10} Inlet

Graseby recommends removing, cleaning, and checking the O-ring of the Model SA 246b PM_{10} Inlet six times per year based on sampling every day for a 24-h period. Sampling locations where PM_{10} levels are in nonattainment may require more frequent maintenance. See Operator Manual Section 5.3 for detailed maintenance procedures.

13.3 Radioactive Source

As discussed in Section 12, maintenance of the radioactive source may only be carried out by authorized individuals. Contact the manufacturer for more information.

13.4 Air Flow Regulator Bleed Valve

The air inlet for the regulator bleed valve is located on the back panel of the instrument (see Figure 6). The inlet is fitted with a protective filter that must be replaced annually, or more often in very dusty environments. An inexpensive automobile fuel filter is suitable for this purpose.

14. Performance Criteria and Quality Assurance (QA)

Required quality assurance measures and guidance concerning performance criteria that should be activated within each laboratory are summarized in the following sections.

14.1 Standard Operating Procedures (SOPs)

14.1.1 SOPs should be generated by the users to describe and document the following activities in their laboratories:

- Assembly, calibration, leak check, and operation of the specific sampling system and equipment used;
- Preparation, storage, shipment, and handling of the sampler system;
- Purchase, certification, and transport of standard reference materials; and
- All aspects of data recording and processing, including lists of computer hardware and software used.

14.1.2 Specific stepwise instructions should be provided in the SOPs and should be readily available to and understood by the personnel conducting the monitoring work.

14.2 Quality Assurance Program

The user should develop, implement, and maintain a quality assurance program to ensure that the sampling system is operating properly and collecting accurate data. Established calibration, operation, and maintenance procedures should be conducted on a regularly scheduled basis and should be part of the quality assurance program. Calibration verification procedures provided in Section 11, operation procedures in Section 10, and the manufacturer's instruction manual should be followed and included in the QA program. Additional QA measures (e.g., trouble shooting) as well as further guidance in maintaining the sampling system are provided by the manufacturer. For detailed guidance in setting up a quality assurance program, the user is referred to the *Code of Federal Regulations* (4) and the *U. S. EPA Handbook on Quality Assurance* (3).

15. References

1. Equivalent Method Designation, Andersen Instruments Model FH62I-N PM_{10} Beta Attenuation Monitor, *Federal Register*, Vol. 55, September 18, 1990, p. 38387.

2. Andersen Instruments, Inc., *Operator Manual: FH 62 I-N PM_{10} Beta Attenuation Monitor*, Atlanta, GA.

4. *Quality Assurance Handbook for Air Pollution Measurement Systems, Volume II--Ambient Air Specific Methods (Interim Edition)*, EPA 600/R-94/038b.

5. 40 CFR, part 58, Appendices A and B.

TABLE 1. SEQUENCE OF PARAMETERS

Parameter	Value	Comments
Mass	≤2,400 μg	Mass on filter; a higher setting could result in "pegged" readings.
Pressure	User select	Pressure drop across filter; increases with mass loading.
Air Flow	≥900 L/hr	Flow rate through instrument; can drop with mass loading.
Cycle	User select	Minutes since last change; select > 1,440 min to minimize changes.
Time	24:00	Filter change at midnight; required for equivalent method.

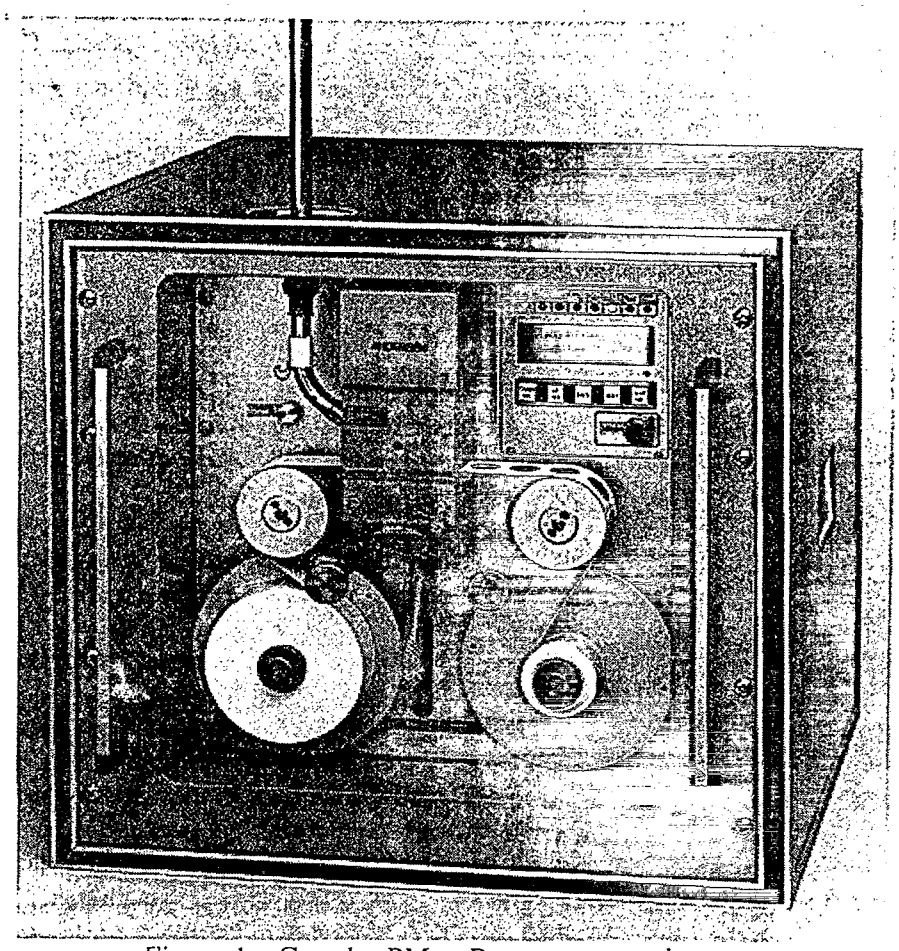

Figure 1. Graseby PM_{10} Beta gauge monitor.

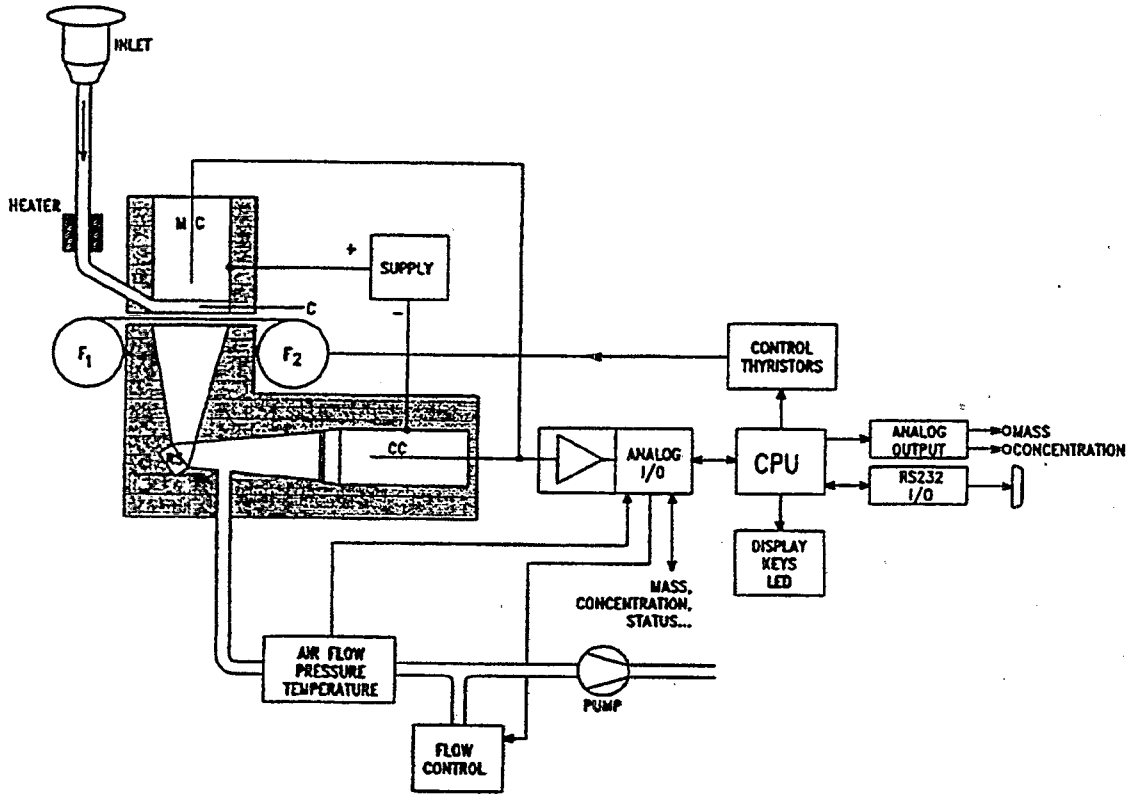

WC = MEASURING CHAMBER
CC = COMPENSATION CHAMBER
RS = RADIOACTIVE SOURCE
C = CHAMBER FOR PARTICULATE DEPOSITION AND MEASUREMENT
RS-C-WC = MEASUREMENT SECTION
RS-CC = COMPENSATION MEASUREMENT SECTION
F_1, F_2 = FILTER REELS

Figure 2. Schematic diagram of the Graseby beta gauge monitor.

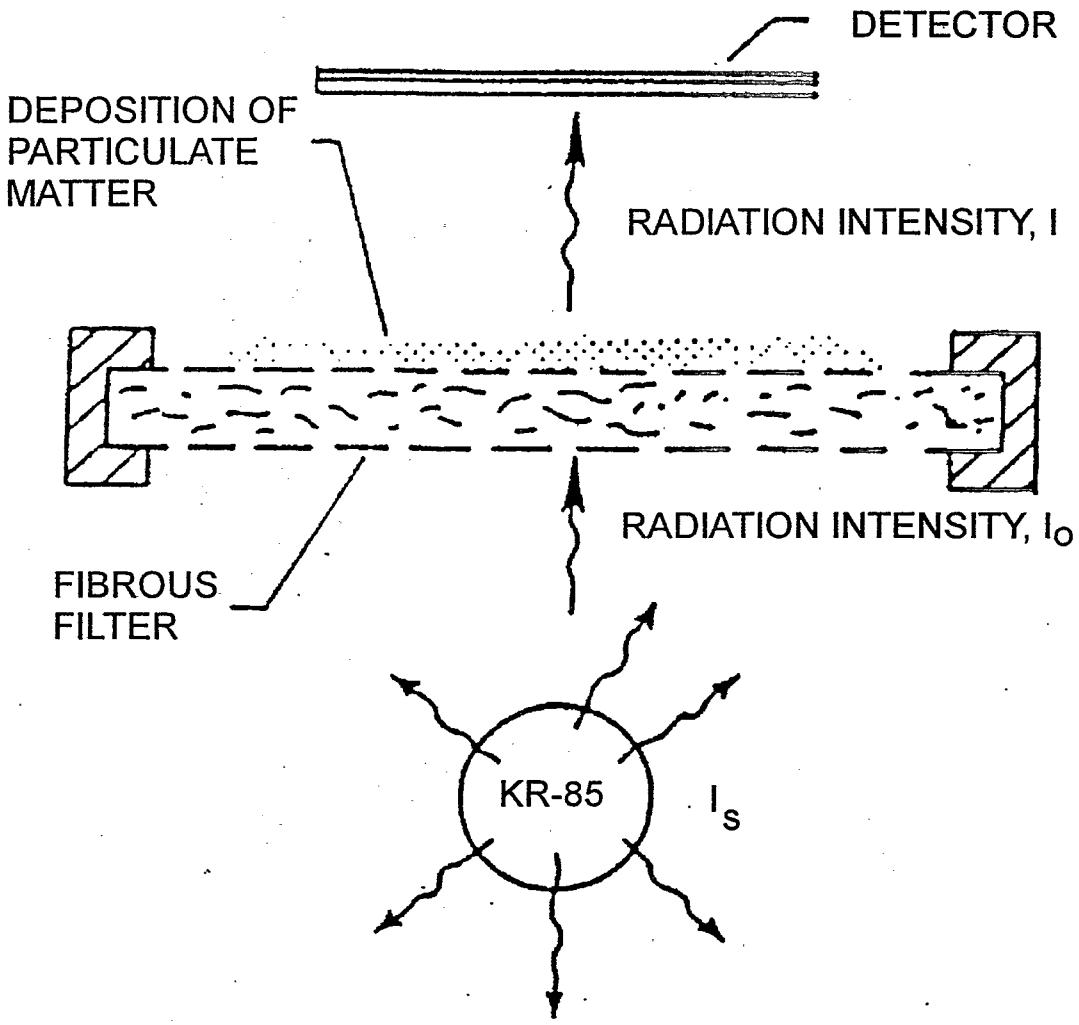

Figure 3. Measurement principle of the Graseby beta gauge monitor.

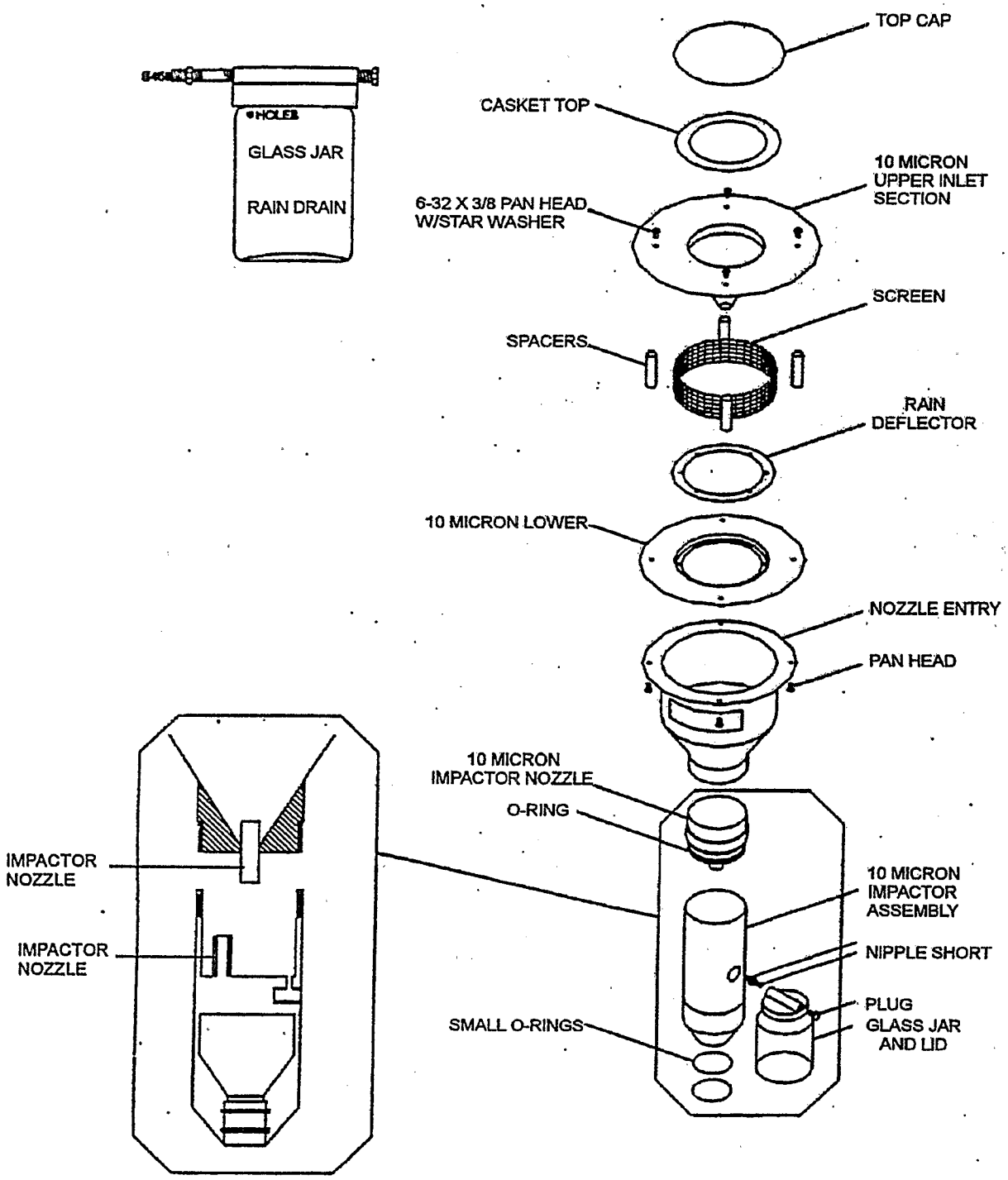

Figure 4. Graseby beta monitor PM-10 inlet.

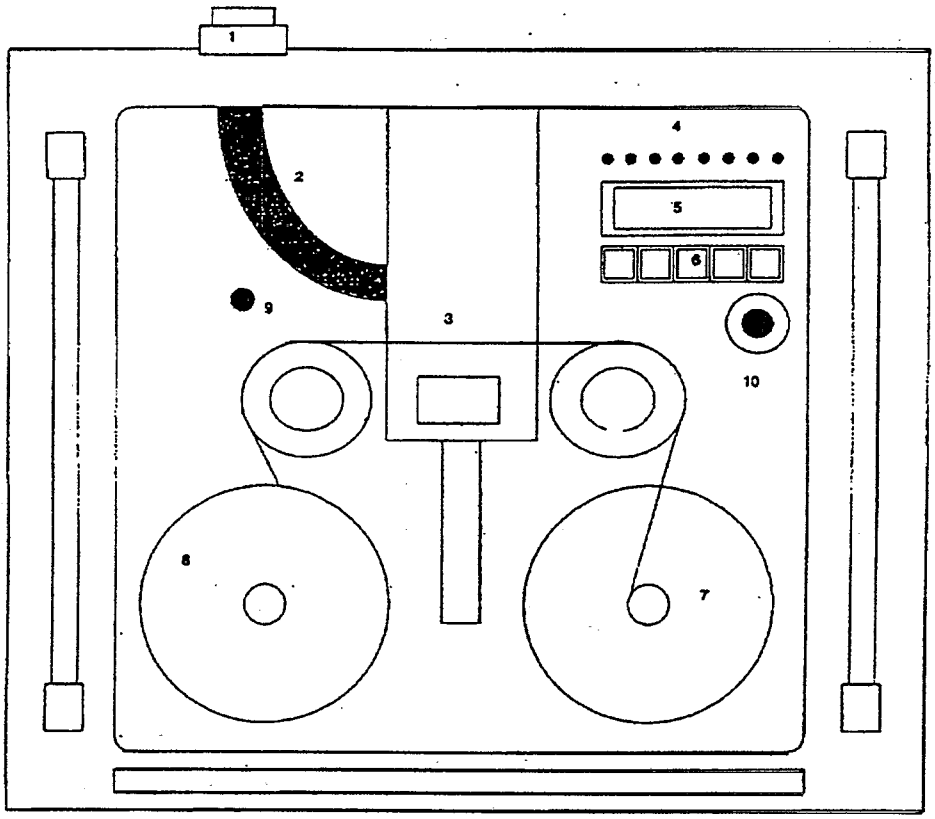

LEGEND

1. Air inlet
2. Heated air inlet
3. Opening for test probe
4. LED's indication operating/error status

A	"ON"	(green)	Continuously lit: power ON, no error Flashing slowly (0.5Hz): measured value buffer contains <30 sample values Flashing rapidly (2Hz): zero no longer reached
B	"ON LINE"	(green)	Auto, On Line, keyboard disabled
C	"Alarm"	(red)	Concentration alarm Threshold 1 exceeded flashing - Threshold 2 exceeded
D	"FS Break"	(yellow)	Filter tape feed reel not turning on filter change; end of filter tape or break
E	"Flowrate"	(green)	Air flow rate OK
F	"Flowrate"	(yellow)	Air flow rate outside limits
G	"Pump"	(green)	Pump running
H	"Filter change"	(red)	Filter change cycle running 3-phase, flashing see Section 10.4

5. Display for readout
6. Control keys
7/8. Filter strip reels
9. Test probe
10. Calibration potentiometer

Figure 5. Front of Graseby beta gauge monitor.

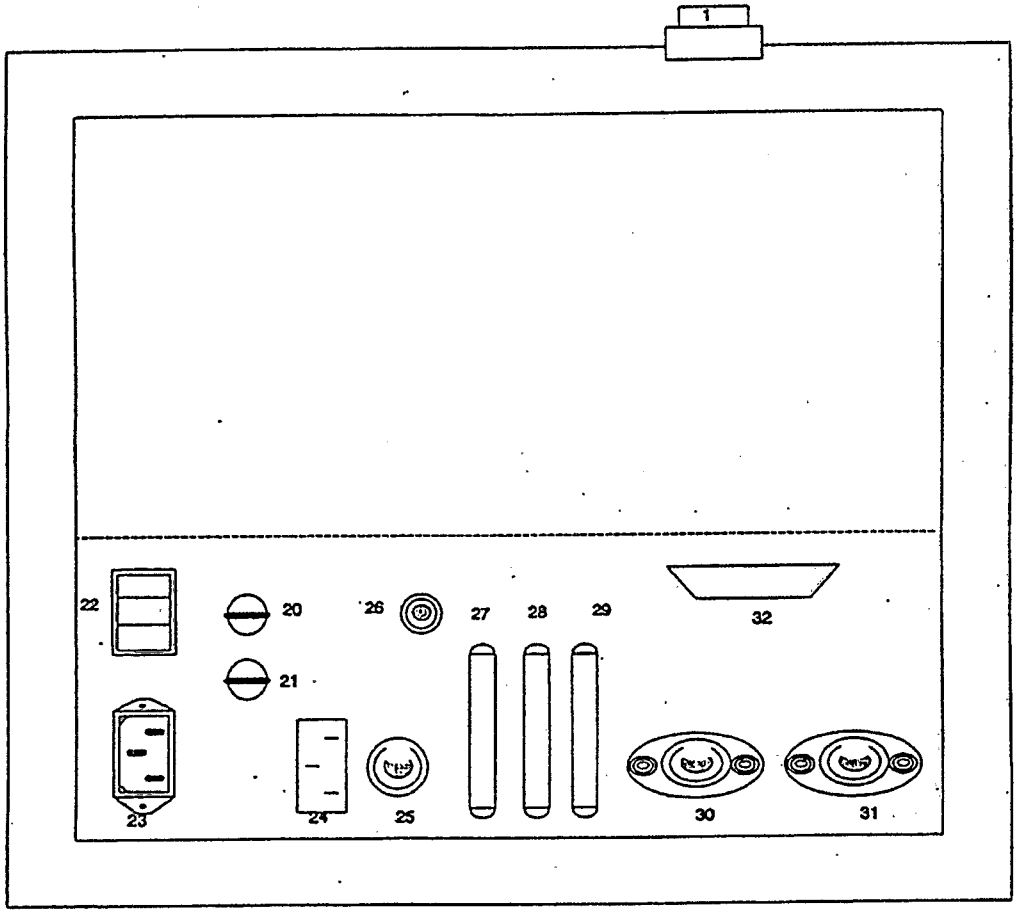

LEGEND

20. 4 amp power fuse for pump/controller
21. 1 amp power fuse for electrical
22. Power switch
23. 115 VAC power
24. Pump connecting socket
25. Air flow rate regulator valve connection socket
26. Pump connection socket
27. Data interface RS 232
28. Relay contacts
29. Analog inputs
30. Concentration output
31. Mass concentration output
32. Network computers output

Figure 6. Rear of Graseby beta-gauge monitor.

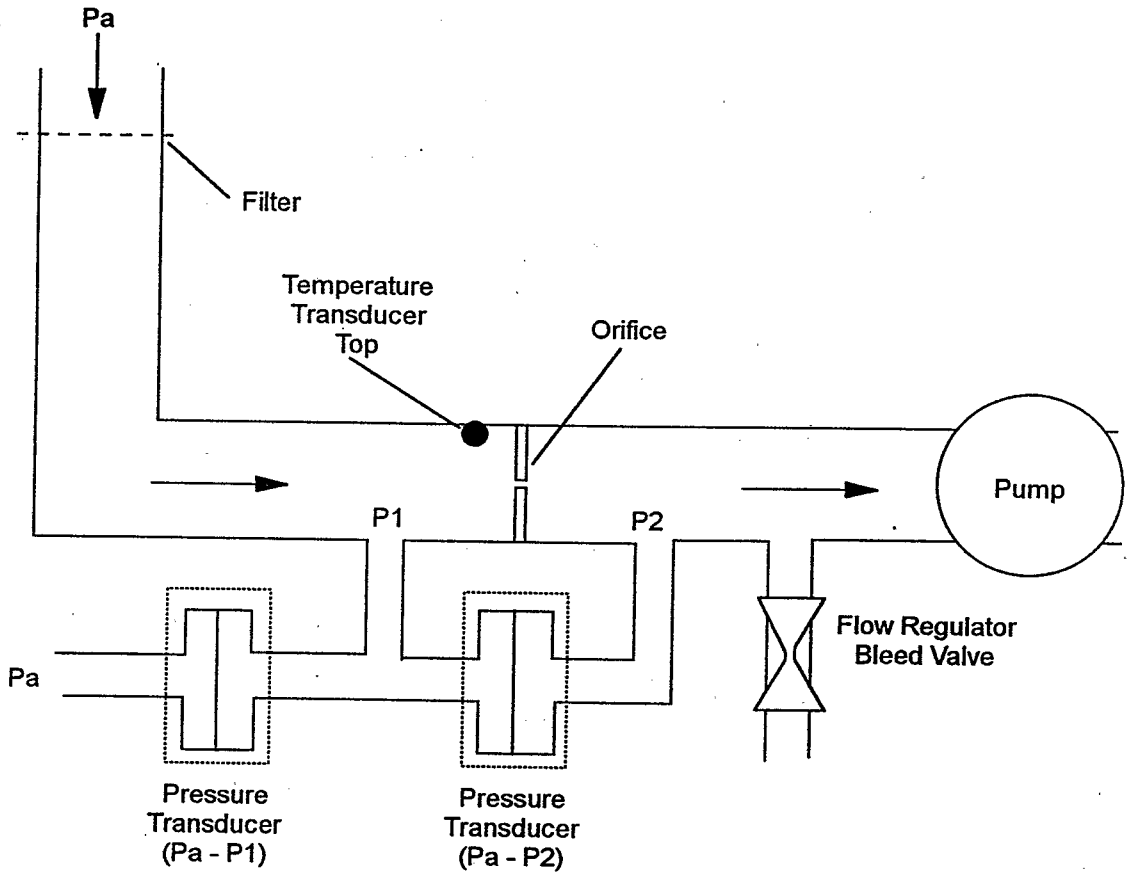

Figure 7. Air flow rate measurement and control for the Graseby beta gauge monitor.

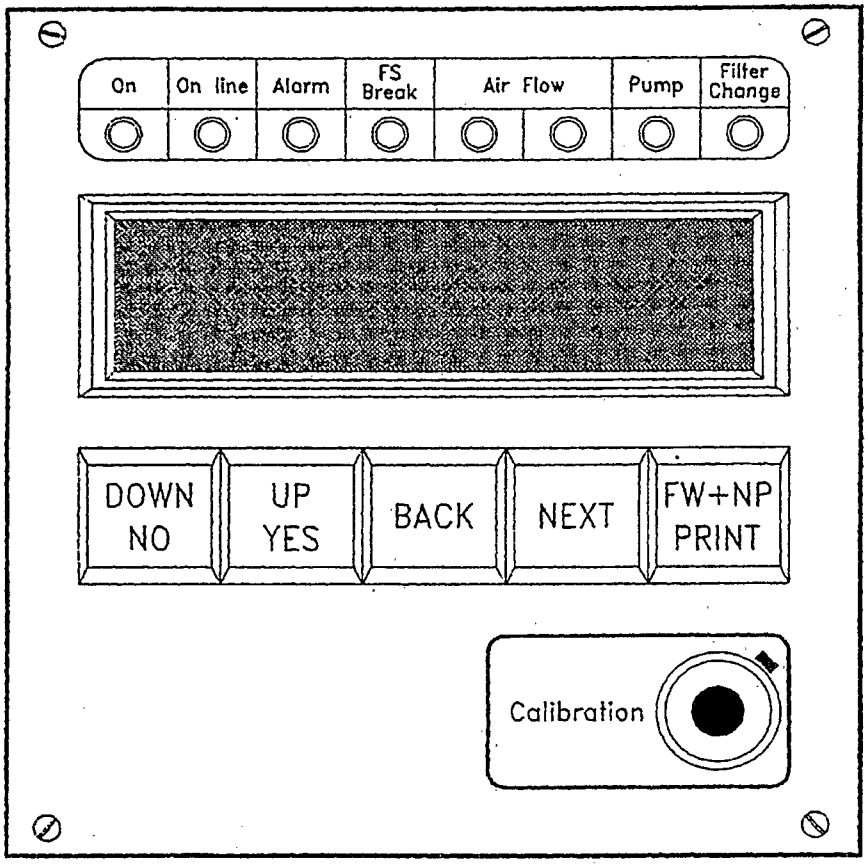

Figure 8. Instrument control system for the Graseby gauge monitor.

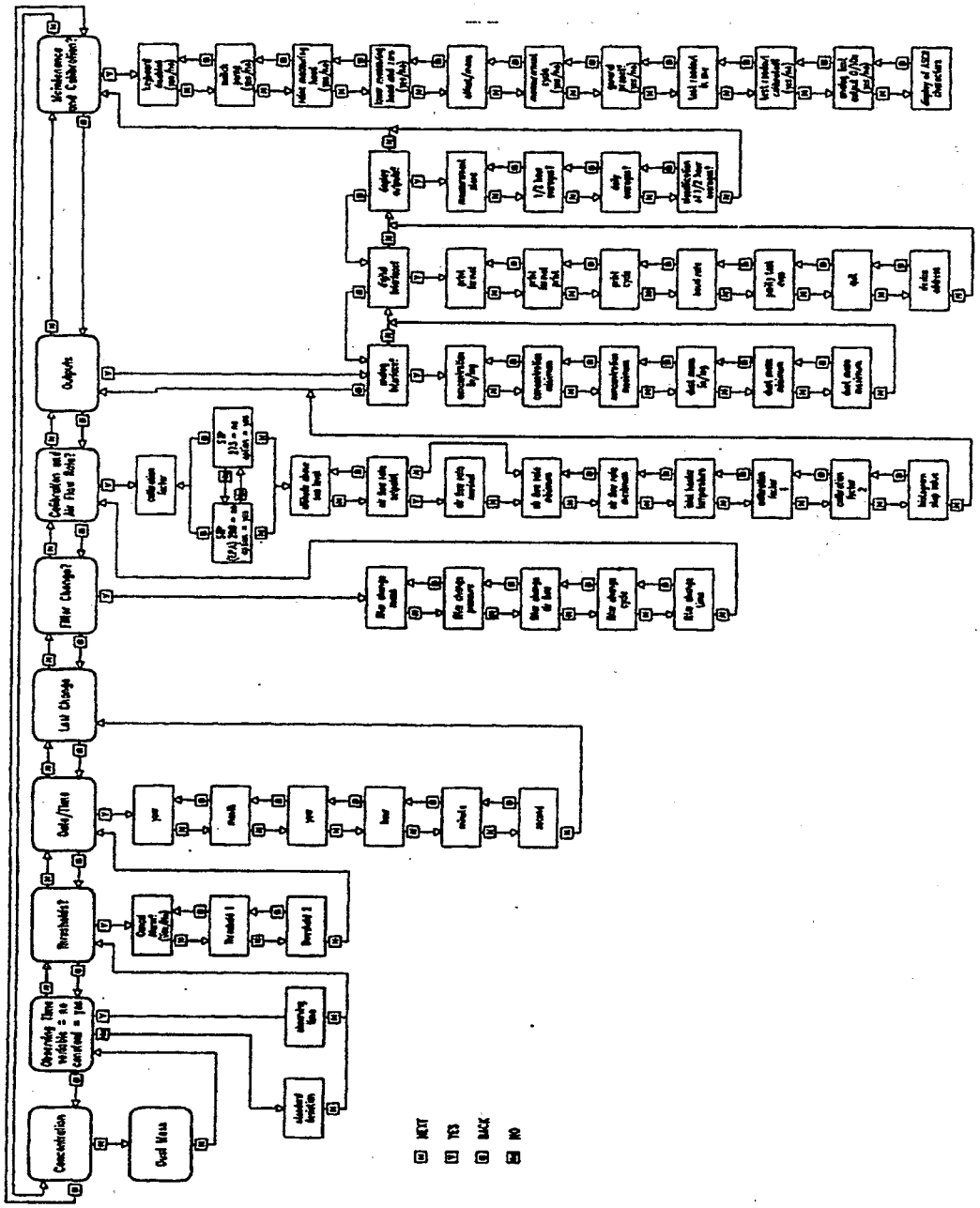

Figure 9. Microprocessor menu for the Graseby beta gauge monitor.

EPA/625/R-96/010a

Compendium of Methods for the Determination of Inorganic Compounds in Ambient Air

Compendium Method IO-1.2

DETERMINATION OF PM_{10} IN AMBIENT AIR USING THE THERMO ENVIRONMENTAL INSTRUMENTS (FORMERLY WEDDING AND ASSOCIATES) CONTINUOUS BETA ATTENUATION MONITOR

Center for Environmental Research Information
Office of Research and Development
U.S. Environmental Protection Agency
Cincinnati, OH 45268

January 1997

Method IO-1.2

Acknowledgements

This Method is a part of *Compendium of Methods for the Determination of Inorganic Compounds in Ambient Air* (EPA/625/R-96/060a), which was prepared under Contract No. 68-C3-0315, WA No. 2-10, by Midwest Research Institute (MRI), as a subcontractor to Eastern Research Group, Inc. (ERG), and under the sponsorship of the U.S. Environmental Protection Agency (EPA). Justice A. Manning, Center for Environmental Research Information (CERI), and Frank F. McElroy, National Exposure Research Laboratory (NERL), both in the EPA Office of Research and Development, were the project officers responsible for overseeing the preparation of this method. Other support was provided by the following members of the Compendia Workgroup:

- James L. Cheney, Corps of Engineers, Omaha, NB
- Michael F. Davis, U.S. EPA, Region 7, KC, KS
- Joseph B. Elkins Jr., U.S. EPA, OAQPS, RTP, NC
- Robert G. Lewis, U.S. EPA, NERL, RTP, NC
- Justice A. Manning, U.S. EPA, ORD, Cincinnati, OH
- William A. McClenny, U.S. EPA, NERL, RTP, NC
- Frank F. McElroy, U.S. EPA, NERL, RTP, NC
- William T. "Jerry" Winberry, Jr., MRI, Cary, NC

This Method is the result of the efforts of many individuals. Gratitude goes to each person involved in the preparation and review of this methodology.

Author(s)

- William T. "Jerry" Winberry, Jr., Midwest Research Institute, Cary, NC
- Stephe Edgerton, Midwest Research Institute, Cary, NC

Peer Reviewers

- Rick Taylor, Missouri Department of Natural Resources, Jefferson City, MO
- David Brant, National Research Center for Coal and Energy, Morgantown, WV
- John Glass, SC Department of Health and Environmental Control, Columbia, SC
- Jim Cheney, U.S. Army Corps of Engineers, Omaha, NB
- Charles Rodes, Research Triangle Institute, RTP, NC
- Danny France, U.S. EPA, Region 4, Athens, GA
- David Harlos, Environmental Science and Engineering, Gainesville, FL
- Jim Tisch, Graseby, Cleves, OH
- Al Wehr, Texas Natural Resource Conservation Commission, Austin, TX
- Richard Shores, Research Triangle Institute, RTP, NC

DISCLAIMER

This Compendium has been subjected to the Agency's peer and administrative review, and it has been approved for publication as an EPA document. Mention of trade names or commercial products does not constitute endorsement or recommendation for use.

Method IO-1.2
Determination of PM_{10} in Ambient Air
Using the Thermo Environmental Instruments
(formerly Wedding) Continuous Beta Attenuation Monitor

TABLE OF CONTENTS

	Page
1. Scope	1.2-1
2. Applicable Documents	1.2-3
2.1 ASTM Standards	1.2-3
2.2 Other Documents	1.2-3
3. Summary of Method	1.2-3
4. Significance	1.2-3
5. Definitions	1.2-4
6. Interferences	1.2-5
7. Apparatus	1.2-5
7.1 Sampler PM_{10} Inlet	1.2-6
7.2 Analog Board	1.2-6
7.3 Micro-Controller Board	1.2-6
7.4 Tape Drive and Sampling Module	1.2-6
7.5 Filter Media	1.2-7
7.6 Radioactive Source	1.2-7
7.7 Detector Assembly	1.2-7
7.8 Data Output Devices	1.2-7
7.9 Critical Flow Device	1.2-8
7.10 Vacuum Pump	1.2-9
8. Assembly	1.2-9
9. Instrument Operation	1.2-10
9.1 Instrument Start-up	1.2-10
9.2 Loading the Filter Tape	1.2-10
9.3 Setting Up the Instrument	1.2-11
9.4 Commencing Sampling	1.2-13
9.5 Other Control Keys	1.2-14
10. Replacing the Filter Tape	1.2-15
11. Printer Paper Replacement (if applicable)	1.2-15
12. Maintenance	1.2-16
12.1 Detector	1.2-16
12.2 Sampling Inlet	1.2-16
13. Instrument Calibration	1.2-16
13.1 Mass Determination	1.2-16
13.2 Flow Rate	1.2-17
13.3 Single-Point External Flow Rate Audit Procedure Using a Flow Transfer Standard	1.2-17
13.4 Mass Determination Audit	1.2-19
13.5 Leak Checking	1.2-19
14. Safety	1.2-19
15. Performance Criteria and Quality Assurance (QA)	1.2-19
15.1 Standard Operating Procedures (SOPs)	1.2-19
15.2 QA Program	1.2-20
16. References	1.2-20

Chapter IO-1

CONTINUOUS MEASUREMENT OF SUSPENDED PARTICULATE MATTER (SPM) IN AMBIENT AIR

Method IO-1.2
DETERMINATION OF PM_{10} IN AMBIENT AIR USING THE THERMO ENVIRONMENTAL INSTRUMENTS (FORMERLY WEDDING) CONTINUOUS BETA ATTENUATION MONITOR

1. Scope

1.1 The area of toxic air pollutants has been the subject of interest and concern for many years. Recently the use of receptor models has resolved the elemental composition of atmospheric aerosol into components related to emission sources. The assessment of human health impacts resulting in major decisions on control actions by federal, state and local governments is based on these data. Accurate measures of toxic air pollutants at trace levels are essential to proper assessment.

1.2 Suspended particulate matter (SPM) in air generally is a complex, multi-phase system of all airborne solid and low-vapor pressure liquid particles having aerodynamic particle sizes from below 0.01 μm to 100 μm and larger. Historically, SPM measurement has concentrated on total suspended particulates (TSP), with no preference to size selection.

1.3 The EPA reference method for TSP is codified at 40 CFR 50, Appendix B. This method uses a high-volume sampler (hi-vol) to collect particles with aerodynamic diameters of approximately 100 μm or less. The hi-vol samples 40 and 60 ft^3/min of air with the sampling rate held constant over the sampling period. The high-volume design causes the TSP to be deposited uniformly across the surface of a filter located downstream of the sampler inlet. The TSP high volume can be used to determine the average ambient TSP concentration over the sampling period, and the collected material subsequently can be analyzed to determine the identity and quantity of inorganic metals present in the TSP.

1.4 Research on the health effects of TSP in ambient air has focused increasingly on those particles that can be inhaled into the respiratory system, i.e., particles of aerodynamic diameters <10 μm. Researchers generally recognize that these particles may cause significant, adverse health effects.

1.5 On July 1, 1987, the U. S. Environmental Protection Agency (EPA) promulgated a new size-specific air quality standard for ambient particulate matter. This new primary standard applies only to particles with aerodynamic diameters ≤ 10 micrometers (PM_{10}) and replaces the original standard for TSP. To measure concentrations of these particles, the EPA also promulgated a new federal reference method (FRM). This method is based on the separation and removed of non-PM_{10} particles from an air sample, followed by filtration and gravimetric analysis of PM_{10} mass on the filter substrate.

1.6 The new primary standard (adopted to protect human health) limits PM_{10} concentrations to 150 μm/std m^3) during a 24-h period. These smaller particles are able to reach the lower regions of the human respiratory tract and, thus, are responsible for most of the adverse health effects associated with suspended particulate pollution. The secondary standard, used to assess the impact of pollution on public welfare, has also been established at 150 μm/std m^3.

1.7 Monitoring methods for particulate matter are designated by the EPA as reference or equivalent methods under the provisions of 40 CFR Part 53, which was amended in 1987 to add specific requirements for PM_{10} methods. Part 53 sets forth functional specifications and other requirements that reference and equivalent methods for each criteria pollutant must meet, along with explicit test procedures by which candidate methods or samplers are to be tested against those specifications. General requirements and provisions for reference and equivalent methods are also given in Part 53, as are the requirements for submitting an application to the EPA for a reference or equivalent method determination.

1.8 Under the Part 53 requirements, *reference methods* for PM_{10} must use the measurement principle and meet other specifications set forth in 40 CFR 50, Appendix J. They must also include a PM_{10} sampler that meets the requirements specified in Subpart D of 40 CFR 53. Appendix J specifies a measurement principle based on extracting an air sample from the atmosphere with a powered sampler that incorporates inertial separation of the PM_{10} size range particles followed by collection of the PM_{10} particles on a filter over a 24-h period. The average PM_{10} concentration for the sample period is determined by dividing the net weight gain of the filter over the sample period by the total volume of air sampled. Other specifications are prescribed in Appendix J for flow rate control and measurement, flow rate measurement device calibration, filter media characteristics and performance, filter conditioning before and after sampling, filter weighing, sampler operation, and correction of sample volume to EPA reference temperature and pressure. In addition, sampler performance requirements in Subpart D of Part 53 include sampling effectiveness (the accuracy of the PM_{10} particle size separation capability) at each of three wind speeds and "50% cutpoint" (the primary measure of 10-micron particle size separation). Field tests for sampling precision and flow rate stability are also specified. In spite of the instrumental nature of the sampler, this method is basically a manual procedure, and all designated reference methods for PM_{10} are therefore defined as manual methods.

1.9 This document describes the protocol for the operation of a continuous particulate mass monitor that directly measures mass concentrations of atmospheric particulate matter as PM_{10} on a real-time basis.

1.10 The instrument uses the beta gauge method, which is based on the attenuation of beta particles as they pass through the particulate matter that has been deposited on a filter.

1.11 With certain specifications, the instrument has been designated as an equivalent method for PM_{10} (24-h average concentration) by the EPA under Designation No. EQPM-0391-081, effective March 5, 1991 (1). Except as otherwise noted, this protocol addresses the configuration and operation of the instrument as an equivalent method for PM_{10}.

2. Applicable Documents

2.1 ASTM Standards

- D1356 *Definitions of Terms Related to Atmospheric Sampling and Analysis.*

2.2 Other Documents

- Thermo Environmental Instruments Technical Manual (2).

3. Summary of Method

3.1 Particle-laden air is drawn through a sampling inlet at a constant volumetric flow rate of 18.9 L/min, the design flow rate for the Thermo Environmental Instruments (formerly Wedding and Associates) PM_{10} inlet. The sample air stream passes downward through a filter tape collection substrate where the particles are deposited.

3.2 Upon completion of the sampling cycle, the filter tape is shifted to the beta source/detector to measure the attenuated count rate due to the presence of collected particles.

3.3 The silicon semiconductor beta detector has high sensitivity and fast response, enabling the instrument to measure the ambient mass concentration with a resolution of approximately 3 $\mu g/m^3$ of collected particles for a 1-h sampling period.

3.4 The Thermo Critical Flow Device maintains a constant volumetric flow rate through the instrument.

3.5 A microcomputer-based data acquisition system controls the filter tape drive, monitors temperature and pressure, calculates flow rate and mass concentration values, and provides the necessary analog outputs for a telemetry system. Custom system software can be provided by Thermo to assist the users to meet the particular, unique requirements of their application.

[Note: The PM_{10} concentrations calculated by the original instrument are in terms of μg per actual m^3. These values must be converted by the user into μg per standard m^3 for purposes of demonstrating attainment of the national ambient air quality standard (NAAQS) for PM_{10}. Instruments modified with a manufacturer-provided retro-fit kit (described later) report concentrations in either μg per actual or standard m^3.]

4. Significance

4.1 SPM in air generally is a complex, multi-phase system of aerodynamic particle sizes from below 0.01 μm to greater than 100 μm. Historically, SPM measurement has concentrated on TSP, with no preference to size selection. Research on the health effects of TSP in ambient air has focused increasingly

on those particles that can be inhaled into the respiratory system (i.e., particles of aerodynamic diameter less than 10 μm [PM_{10}]). Researchers generally recognize that those particles may cause significant adverse health effects. Therefore, the primary NAAQS for PM is now in terms of PM_{10}.

4.2 Because of the health effects of PM_{10}, this continuous particulate monitor has been developed to allow mass measurement of PM_{10} concentration on a quasi, real-time basis.

4.3 The monitor utilizes a filter-based measuring system for providing quasi, real-time mass monitoring capability. With certain specifications, the monitor has been designated by EPA as an equivalent method for determining the 24-h average ambient concentration of PM_{10}. In addition, the instrument can be operated outside the equivalent method specifications to perform other types of PM sampling programs.

4.4 The particulate matter sample is retained on the filter tape, providing the potential for subsequent analysis.

5. Definitions

[Note: Definitions used in this method are consistent with the definitions found in ASTM D1356. All abbreviations and symbols are defined within this document at the point of first use. Any user prepared standard operating procedures (SOPs) should also conform to the definitions of ASTM D1356.]

5.1 Air pollution. The presence of unwanted material in the air. The term "unwanted material" here refers to material in sufficient concentrations, present for a sufficient time, and under concentrations, present for a sufficient time, and under circumstances to interfere significantly with comfort, health, or welfare or persons or with the full use and enjoyment of property.

5.2 Beta particle. An elementary particle emitted by radioactive decay, that may cause skin burns.

5.3 Coarse and fine particles. Coarse particles and those with diameters (aerodynamic) greater than 2.5 μm that are removed by the sampler's inlet; fine particles are those with diameters (aerodynamic) less than 2.5 μm. These two fractions are usually defined in terms of the separation diameter of a sampler.

5.4 Filter. A porous medium for collecting particulate matter.

5.5 Mass concentration. Concentration expressed in terms of mass of substance per unit volume of gas.

5.6 Particle. A small discrete mass of solid or liquid matter.

5.7 Particle concentration. Concentration expressed in terms of number of particles per unit volume of air or other gas.

[Note: On expressing particle concentration the method of determining the concentration should be stated.]

5.8 Sampling. A process consisting of the withdrawal or isolation of a fractional part of a whole. In air or gas analysis, the separation of a portion of an ambient atmosphere with or without the simultaneous isolation of selected components.

5.9 Sampling, continuous. Sampling without interruptions throughout an operation or for a predetermined time.

6. Interferences

6.1 Because the measurement mechanism has no moving parts, the instrument is not sensitive to vibrations (e.g., vacuum pump vibration or mechanical noise) that can affect the accuracy of some other types of continuous PM monitors.

6.2 Unlike some types of continuous PM monitors, this instrument does not require the ambient air stream to be heated to a particular standard temperature. This feature eliminates a potential source of inaccuracy; heating can volatilize some semivolatile materials that would otherwise be deposited on the filter, leading to inaccuracies in both mass measurements and later chemical analyses.

6.3 The instrument should be protected against condensation in the sampling system, which can affect the accuracy of the mass measurements.

7. Apparatus

The instrument includes two custom cabinets, one for PM sampling and control and one for the vacuum pump. The insulated main particle sampling cabinet (shown in Figure 1) is heated and cooled so that it can operate under ambient conditions. However, the instrument should be housed in a heated and air conditioned shelter. The heating and cooling are independently controlled to preclude temperature extremes within the cabinet.

After assembly, the inlet tube extends upward from the main sampling cabinet and is topped by the W&A PM_{10} Inlet (see Figure 2). The front cabinet door opens to reveal the filter reels, LCD define display, particle sampling module, the source/detector fixture, communication ports, keypad, and printer, as shown in Figure 1. Newer units are not equipped with a printer because users typically connect the unit to a data logger or computer for data storage and access. Figure 3 illustrates the back of the cabinet, where the main power cord enters and the power supply cord and vacuum tubing that lead to the vacuum pump emerge.

A modification kit, available (at no charge) from the manufacturer, includes new temperature sensors, new software contained on a new EPROM chip, a calibration foil, installation instructions, and a manual supplement, and provides improved accuracy of flow measurement and other features.

The vacuum pump cabinet contains a separate cooling fan that is activated when the pump operates. As illustrated in Figure 3, the vacuum sampling tube is connected from a fitting on the pump cabinet to a fitting on the particle sampling cabinet. The power to the pump cabinet also comes from the main cabinet. The major components of the instrument are described below.

7.1 Sampler PM_{10} Inlet

A modified Thermo PM_{10} inlet, originally developed for the dichotomous sampler (Wedding et al. 1982), is used as the sampling inlet for the PM_{10} beta gauge. The inlet achieves proper particle size separation at a sampling rate of 18.9 L/min, the design flow rate of the instrument. A TSP inlet with a cut point of 100 μm is also available from the manufacturer.

The PM_{10} sampling inlet is illustrated in Figure 4. The inlet employs an omnidirectional cyclone fractionator, which allows the particles to enter from any angle of approach. An angular impetus is imparted to the particle motion via the eight, evenly-spaced entrance vanes. As the particles enter the inlet, they follow the fluid stream lines along the lower radius and enter the cyclone fractionator through the vane system. Particle removal is realized on the oiled surfaces of the inner collection tube. The transmitted particles then enter the middle tube, where the flow direction is altered 180°. A final turn is made giving the particles a downward trajectory to the collection substrate.

7.2 Analog Board

The Analog Board consists of the various circuits used for supplying DC power, motor control, relaying, temperature sensing, and signal conditioning needs for the instrument. Most of the wiring for the instrument is provided by the Analog Board.

7.3 Micro-Controller Board

The micro-controller board provides operational controls, time and flow-rate data recording, and all data calculations and conversions.

7.4 Tape Drive and Sampling Module

The instrument uses a bi-directional tape drive system. First, a background beta count is taken on the area of the filter tape that is situated in the measurement position (i.e., between the beta source and the detector). When the background count is completed, the particle sampling module opens, the tape advances, and the filter spot on which the background count was taken is positioned beneath the sample inlet tube. The particle sampling module then closes and seals, and sampling is initiated by starting the vacuum pump. After the 1-h sampling cycle is completed, the sampling module opens, the filter tape with deposited PM_{10} is shifted back to the measurement position, the sample module closes, and a beta count is taken. Mass concentration is determined based on the mass of PM_{10} accumulated and the volumetric flow rate of the instrument during the sampling cycle.

The standard instrument is programmed to repeat the sampling and measurement cycle four times on a single spot before the filter tape advances to an unused spot. Thus, total sampling time on each spot is 4 h. The instrument also is programmed to go to a shorter cycle if PM_{10} is accumulating so fast that the flow rate will be reduced to an unacceptable level in less than 4 h. The manufacturer can supply software for different sampling cycles, but the current model of the instrument does not allow the user to select the sampling cycle.

7.5 Filter Media

Thermo offers two choices of filter substrates--glass fiber (P/N BG-320) and membrane (P/N BG-310). The instrument is designated as an equivalent method for PM_{10} using the glass fiber filter medium. This filter medium can accumulate extremely high PM loadings without incurring a significant increase in pressure drop across the filter. The membrane medium is made of Teflon®, which is ideal for subsequent chemical analysis and is not affected by moisture.

The filter medium is supplied as a tape on a reel. The tape is threaded from the supply reel, through the measurement and sampling positions, to the takeup reel. Instructions for replacing the filter tape are presented in Section 10.

7.6 Radioactive Source

A carbon-14 radioactive source is mounted into the fixture positioned beneath the filter tape. In no case should the front (top) surface of the source or source fixture be touched. Should the source laminate become scratched, the radioactive material may leak. A damaged source must be returned to Thermo for disposal and replacement. The radioactive source has the following characteristics: (1) an isotope of ^{14}C, (2) an activity of $< 100\ \mu Ci$, (3) a half-life of 5,730 yr, (4) a maximum energy of 155KeV, and (5) a laminate-sealed housing. In addition, this source is described as a Thermo 1186 Series ^{14}C Source.

The long half-life of carbon-14 precludes the need for recalibration and replacement of the source. The use of the fast-response, low noise semiconductor detector makes it possible to use a low activity, low energy beta source. Carbon-14 also has the added advantage of being a pure beta emitter without residual gamma radiation.

The radioactive labels, positioned on the side of the cabinet, clearly provide instructions to the user for disposition of the device and by-product material if necessary. At no time should the labels be removed. See Section 14 for a discussion of safety considerations.

7.7 Detector Assembly

An ion-implanted silicon semi-conductor (IISS) detector and a preamplifier acquisition board (PACB) are packaged in one fixture. The IISS detector is used to stop beta particles and permit counting of particles that penetrate the filter medium. The IISS detector accepts an exceptionally high incidence of beta, having a maximum count-rate of 100,000 cps, possesses ultra low-noise characteristics, and is a ruggedly designed. The detector is optimized individually for each unit to stop beta particles emitted from the carbon-14 source. The IISS detector has low leakage current (1-10 $nA/cm^2/100\ \mu m$), which makes it well suited for measuring low-energy beta particles.

7.8 Data Output Devices

[Note: The instrument does not store measurement or calculation data. The user must provide a suitable data handling system to maintain a record of measured and calculated parameters.]

7.8.1 Parallel Printer. Older units are equipped with a built-in parallel printer, but the units now being shipped do not have this feature. When activated, this printer records all measurements and calculated values generated by the instrument. However, this printer should not be operated when the instrument is unattended because the printer paper can interfere with the filter tape drive mechanism.

7.8.2 Telemetry (Analog) Output. The instrument provides up to six channels of 0-5 volts direct current (VDC) output for use with telemetry applications (two channels are standard). These data channels are available through a 25-pin connector located on the main instrument panel.

7.8.3 RS-232 (Digital) Output. A second 25-pin connector on the main instrument panel serves as the connection point for a serial printer or digital communications device, such as a data logger or computer. In communications mode, this port can be used for remote control over the instrument.

7.9 Critical Flow Device

The collection of accurate and meaningful PM_{10} or TSP concentrations is intimately related to proper flow control. Flow control provides an accurate denominator for the calculation of mass concentrations, whether PM_{10} or TSP is being measured, and maintains the design flow rate of the PM_{10} fractionating element so that it operates at the specific air velocities for which it was intended.

The Critical Flow Device (CFD), a critical flow system requiring no periodic calibration, is used as a flow control device for the instrument. Use of the CFD provides for accurate flow rate measurement. The critical flow orifice within the CFD is sized specifically for use with only one type of filter medium (i.e., either glass fiber of Teflon®) to provide the flow rate necessary for proper particle size selection by the PM_{10} inlet. Each instrument is calibrated at the factory, and an instrument-specific flow coefficient constant is supplied with each unit for accurately calculating the flow rate during operation. This constant is entered into the instrument's battery-backed random access memory (RAM) at the factory and duplicated on a label affixed to the instrument panel. In the event of battery failure, the user must re-enter the constant into RAM (see Section 9.3.1).

Caution: Use of a filter medium other than that originally specified for the instrument may result in a flow rate different from that for which the PM_{10} inlet is designed.

The flow rate through the filter tape is continuously monitored during operation by the micro-controller board. Atmospheric pressure is measured with an electronic pressure transducer when the pump is off between sampling periods. The stagnation pressure (i.e., the absolute pressure downstream from the filter medium) is measured while the vacuum pump is operating during the sampling cycle. The microcomputer outputs the flow rate and the average values of temperature and pressure for the sampling period.

A modification kit, which is available (at no charge) from the manufacturer and is highly recommended, provides a temperature sensor to measure ambient (outdoor) temperature to allow the instrument to more accurately calculate the actual volumetric flow rate at the sample air inlet. This modification also allows the instrument to report flow rates in either actual or standard volume units and likewise calculate mass concentrations in either μg per actual of EPA-standard cubic meters.

7.10 Vacuum Pump

The vacuum pump cabinet houses a Gast Model #523-101Q-G18DX or G21DX vacuum pump for power supplies of 115 volts alternating current (VAC)/60 Hertz (Hz) or 220-240 VAC/50 Hz, respectively. A cooling fan is activated when the pump operates. The pump is connected to the main sampling cabinet with a vacuum tube supplied by the manufacturer. Power to the pump cabinet comes from the main cabinet.

8. Assembly

8.1 The instrument is delivered on a pallet protected by foam packaging and a cardboard outer container. Remove the instrument from the packaging by cutting the metal bands on the outside of the container. Save the container in the event that the instrument needs to be transported or repackaged.

8.2 After removing the metal bands and opening the cardboard container, locate and remove the instrument components from the foam packing material. The separate pieces are as follows: main sampling cabinet, pump cabinet, inlet, inlet tube, inlet tube support ring, cleaning brush, cabinet keys, and manual. (The inlet tube support ring, cleaning brush, and keys should be in a plastic bag.)

8.3 Once all components have been located and removed from the box, assemble the instrument. First, insert the inlet onto the end of the inlet tube (it will only fit on one end of tube).

8.4 If the instrument is to be operated with either an extension to the inlet tube or under ambient conditions where high winds may be encountered, install the support ring onto the inlet tube. Slide the support ring onto the inlet tube and tighten the four screws. Do not overtighten the screws or indentations in the tube could be run and, thus, alter the air flow. Attach guide or support wires to the heads of the four screws. If a nonstandard inlet tube (such as an extension) is to be used, contact Thermo for guidance.

8.5 Insert the inlet tube into the main cabinet of the instrument. Use extreme caution because forcing the tube into the cabinet could damage the instrument. Rotate the tube and push it carefully into the cabinet to avoid damaging the O-rings inside the coupler. The tube is fully inserted when resistance from the coupler is felt. When assembled with the standard inlet tube, the inlet is at a height of about 2 meters above the base of the main cabinet.

8.6 Insert the key into the rear door of the main cabinet and rotate the key counterclockwise until the door opens. Check all electrical connections. Make sure there are no loose or unattached cables.

8.7 Instruments sold before November, 1996 should be modified with the modification kit provided by thermo. Install the kit according to instructions provided by Thermo. The kit provides new temperature sensors and electronics for improved accuracy of flow measurements, enabling reporting of concentration in either μg per actual of EPA-standard cubic meters.

8.8 Attach the vacuum pump to the main cabinet with the Tygon® tubing inside the vacuum pump cabinet. This step requires a 9/16" open end wrench or adjustable wrench to tighten the bulkhead fittings.

8.9 Plug the pump cabinet power cord (male) into the power supply cord (female) extending from the rear of the main cabinet.

8.10 Open the door of the main cabinet that houses the instrument panel. First, make sure that the power switch at the top of the instrument panel is in the "OFF" position. Then supply power to the unit (115 VAC/60 Hz or 220 VAC/50 Hz) through the power-in cord (male) located on the rear door of the cabinet. The instrument is now ready for start-up and operation.

9. Instrument Operation

The instrument is operated with the keypad located in the main particle sampling cabinet (see Figure 1). Records of stored data can be obtained from the unit using the built-in 20-column parallel printer (when so equipped), the RS-232 communications port, or the telemetry port. When activated, the 20-column parallel printer, which is part of the instrument, provides a continuous printout of all sampling data. If needed, the RS-232 port is used to communicate with a separate computer. The telemetry port (labeled Analog Port on the instrument) provides the necessary signals to send data to an off-site source via telemetry.

9.1 Instrument Start-up

To begin operation, move the power ON/OFF rocker switch at the top of the instrument panel to the "ON" position (the red light should be on). The LCD will show several messages followed by the "PRESS A KEY" prompt. The valid control keys are shown in Figure 5, and a brief summary of each key, including the location and function, is shown in Table 1.

9.2 Loading the Filter Tape

Caution: NEVER turn the take-up (right side) tape drive manually, or the drive system will be damaged.

The filter tape drive system is illustrated in Figure 6. The filter substrate is a continuous tape. The tape lifetime is based upon the total number of samples and the ambient concentration levels. A reel of glass fiber tape lasts approximately 8 months using the standard sampling cycle.

9.2.1 The tape replacement commands are accessed from the keypad, but the loading procedure must be followed as written in this section. Press the key titled "LOAD TAPE." The following message is displayed:

LOAD NEW TAPE
OPENING SYSTEMS

After the instrument has performed the necessary mechanical functions for the loading of a new filter tape reel, the following message is displayed:

LOAD NEW TAPE
OPENING SYSTEMS
REFER TO MANUAL &
PRESS A KEY TO LOAD

9.2.2 Install an empty take-up reel on the right tape drive. First, remove the black plastic pronged knob from the right tape drive. Place the empty reel on the right tape drive, being sure to slide the hub onto the shaft so that the shaft pin fits into the slot on the hub. Replace the black knob and tighten snugly.

Caution: Tighten the knob and hold the reel at the same time. Do not apply excessive torque to the drive shaft, or the motor may be damaged.

9.2.3 Place a new filter supply reel on the left tape drive, ensuring that the pin on the shaft fits snugly into the slot on the black hub of the reel. (Note that these slots and pins define the vertical plane of the tape. The drive system will malfunction if the pins are not secured in the slots.) Replace the black knob.

9.2.4 Unwind about 24" (60 centimeters) of filter tape by rotating the supply side (left tape drive) in a counterclockwise direction. Feed the free end of the tape over the left side of the No. 1 translational roller, as illustrated in Figure 6. Pass the free end of the tape, from left to right, between the No. 1 upper compression shaft and No. 1 lower compression roller, through the detector/sampling module and between the No. 2 upper compression shaft and the No. 2 lower compression roller. Continue by passing the tape on the right side of the No. 2 translational roller. Wrap the tape in a counterclockwise fashion on the hub of the right (take-up) reel.

9.2.5 Tape the free end to the center of the take-up hub. Be sure that the filter tape is parallel to the edges of the reels. The tape must be in the same vertical plane along its entire path.

[Note: Be sure that the tape passes approximately in the center of all rollers and the sampling module so the tape is centered as it passes through the source, detector, inlet, and both (supply and take-up) reels.]

9.2.6 Depress any key to start the tape advancement, which is pre-programmed to operate for a specific time period (about 1 min). When the tape advancement is complete, ensure that the tape is properly positioned approximately in the center of both the No. 1 and No. 2 translational rollers, that the tape is smooth and flat against each roller, and that it lies in the same vertical plane between supply and take-up reel. Additionally, the tape should be perfectly aligned between the upper compression shafts and the lower compression rollers and should be in the center of the detector/sampling module.

9.3 Setting Up the Instrument

9.3.1 The "C" key is used to set the calibration constant in battery-backed RAM in case it has been lost through battery failure. The five-digit constant, which is unique to each unit, is supplied by W&A and displayed on a label between the filter reels. To set the calibration constant, press the "C" key and input the five-digit constant as given on the label. After entering the fifth digit, the prompt "CHANGE (Y/N)?" will appear on the LCD. If the constant is incorrect, restart the procedure by pressing the

"YES" key. If the constant is correct, press the "NO" key. The "PRESS A KEY" prompt will return to the screen. (This step is not necessary for instruments equipped with the CFCASF flow controller.)

9.3.2 The "D" key is used to set the expected maximum mass concentration for the sampling site in battery-backed RAM. This five-digit constant contains no decimal point, and five digits must be entered. For example, if the maximum anticipated concentration is 250 $\mu g/m^3$, the input constant is 00250. To set the constant, press the "D" key and enter the five-digit constant. After entering the fifth digit, the prompt "CHANGE (Y/N)?" will appear on the LCD. If the constant is incorrect, restart the procedure by pressing the "YES" key. If the constant is correct, press the "NO" key. The "PRESS A KEY" prompt will return to the screen.

[Note: Do not set an upper limit that is arbitrarily high because this will reduce the resolution of the telemetry (analog) output.]

9.3.3 The "SETUP" key is used to enter the correct date and time into the computer. When the "SETUP" key is pressed, the date and time will appear on the LCD followed by the prompt "CHANGE? (Y/N)". If the displayed date and time are incorrect, press the "YES" key. The prompt "INPUT DATE" will appear on the LCD. Enter the six-digit date with zeros preceding single digit days or months. Following the input of the date, the prompt "INPUT TIME" will appear on the LCD. Enter the six-digit time (hours, minutes, and seconds) based on a 24-h clock; the new date, time, and the prompt "CHANGE? (Y/N)" will appear on the LCD. When the correct date and time are displayed, press the "NO" key to complete the setup operation.

9.3.4 Press the "PROGRAM SAMPLING SCHEDULE" key to program the time at which the instrument is to begin a sampling cycle. The programmed date and time will appear on the LCD, followed by the prompt "CHANGE? (Y/N)". If the displayed date and time are incorrect, press the "YES" key. The prompt "INPUT START DATE" will appear on the LCD. Enter the six-digit start date, with zeros preceding single digit days or months; the prompt "INPUT START TIME" will appear on the LCD. Enter the six-digit start time (hours, minutes, and seconds) based on a 24-h clock; the prompt "PRESS A KEY" will appear on the LCD.

[Note: The input start time must be at least 15 min later than the actual time as indicated by the real-time clock.]

9.3.5 Verify that the "FLOW TEMP CORR" is ON (modified units) and select "STAN COND=ON" if flow and concentration are desired in standard volume units.

9.3.6 Press the "PARALLEL PRINTER ON/OFF" key to enable or disable the parallel printer (if so equipped). One of two messages will appear: "PARALLEL PRINTER ON" or "PARALLEL PRINTER OFF." To change the printer mode, press the "PARALLEL PRINTER ON/OFF" key again. If the unit is left unattended, the built-in parallel printer should be in the off mode because the paper may interfere with the mechanical movements.

9.3.7 The "RS-232 PRINTER ON/OFF" key operates in the same manner as the "PARALLEL PRINTER ON/OFF" key described above. A serial printer cannot be enabled at the same time the RS-232 communication port is on. (Only one device, a serial printer <u>or</u> a communications device, can be connected to the RS-232 port on the instrument panel.)

9.3.8 Press the "RS-232 COMM ON/OFF" key to enable or disable the communication port that provides the necessary signals to transmit data off-site. One of the following two messages will appear on the LCD. (1) If the communication port was in the off mode, the current baud rate is displayed

followed by the prompt "CHANGE? (Y/N)". To change the baud rate, press the "YES" key and select a baud rate using the numbered key that corresponds to the desired baud rate shown on the LCD. To accept the baud rate, press the "NO" key; the message "COMM. PORT ON" will appear on the LCD. (2) If the communication port was in the on mode, the message "COMM PORT OFF" will appear on the LCD. This communication port cannot be enabled at the same time the RS-232 serial printer is on.

9.4 Commencing Sampling

9.4.1 To check the instrument prior to commencing sampling, press the "TROUBLE SHOOT" key to initiate a series of 13 diagnostic tests. The results of each test will appear on the LCD with a "PASS" or "FAIL" message. The following four LCD messages illustrate all 13 tests and their results.

1) MODULE DN	PASS
2) COMP. UP	PASS
3) ADVANCE	PASS
4) COMP. DN.	PASS
5) TRANS. RT.	PASS
6) TRANS. LT	PASS
7) MODULE UP	PASS
8) PRESSURE	PASS
9) BETA CNT.	PASS
10) FLOWRATE	PASS
11) PS15	PASS
12) PS12	PASS
13) PS5	PASS

If a "FAIL" indication is displayed for any of the tests, make sure that all sampling information was entered correctly. Also, check the instrument for loose cables or other obvious problems (e.g., make sure the filter tape has been loaded). Press the "TROUBLE SHOOT" key again, and if the "FAIL" message still appears, contact the manufacturer for further service information.

9.4.2 Press the "STATUS" key to confirm the status (on/off) of the parallel printer port, serial printer port, and communications port. Press this key twice to confirm the actual status of these ports. If the status is not as desired, use the appropriate keys as described in Sections 9.3.5 through 9.3.7 to enable the desired output device(s).

[Note: The RS-232 serial printer and RS-232 communications cannot be on at the same time.]

9.4.3 Press the "BEGIN SAMPLING" key to begin sampling operations. The LCD will show the messages "INITIALIZING SYSTEM" and "PLEASE STANDBY" while the unit undergoes the necessary mechanical movements and checking procedures to permit the system to begin operation. When initialization is finished, the LCD shows the actual date and time, the sampling period, the mass concentration of the previous sampling period, and the message "A OR B TO TERMINATE." (All other control keys are disabled.) To immediately terminate sampling, press the "B" key. To terminate

sampling at the end of the sampling period (approximately at the end of each hour), press the "A" key; the prompt "PRESS A KEY" will appear on the LCD. At this time, all valid control keys are enabled.

9.5 Other Control Keys

These keys are enabled only when the instrument is not in sampling mode.

9.5.1 A description of the "LOAD TAPE" key, which is used when loading a new filter tape, is provided in Section 9.2.1.

9.5.2 Press the "RESET" key to reinitialize the instrument. The LCD messages and prompts will be the same as when the instrument was turned on.

9.5.3 Press the "MODULE UP/DOWN" key to activate the sampling module motor. The sampling manifold will open and must be closed by pressing the "MODULE UP/DOWN" key again.

9.5.4 Press the "COMP UP/DOWN key to activate the compression rollers. The compression rollers will open and must be closed by pressing the "COMP UP/DOWN" key again.

9.5.5 Press the "TRANS LEFT/RIGHT" key to translate the tape left or right. Following the first translation from left to right (i.e., from the measurement position to the sampling position), the message "ROLLERS MUST BE TRANSLATED LEFT TO EXIT" will be displayed. Press the "TRANS LEFT/RIGHT" key again to move the translation mechanism back to the original position (i.e., from the sampling position back to the measurement position).

9.5.6 Press the "VACUUM PUMP ON/OFF" key to test the vacuum pump. This action turns the vacuum pump on, and the message "VACUUM PUMP MUST BE TURNED OFF TO EXIT" will be displayed. Press the key again to turn the vacuum pump off.

Note: This key is only for testing the vacuum pump. Turn off the pump after testing for proper automatic operation of the instrument.]

9.5.7 Press the "ADVANCE TAPE" key to advance the filter tape one position. The message "ADVANCING" will be displayed on the LCD as the necessary operations take place. The operation may take up to 2 min because it requires the sampling module and compression rollers to be opened before the tape is advanced.

9.5.8 Press the "TEMP/PRESSURE" key to display the current cabinet temperature and atmospheric pressure.

9.5.9 Press the "BETA COUNT" key to determine if the beta count is acceptable. After a period of time, the message "COUNT ACCEPTABLE" or "COUNT UNACCEPTABLE" will appear on the LCD. If the "COUNT UNACCEPTABLE" message is displayed, make sure that all sampling information was entered correctly. Also, check the instrument for loose cables or other obvious problems. If the beta count remains unacceptable, fill out the troubleshoot questionnaire provided in Addendum 1 of the operating manual and contact the manufacturer for further service information.

9.5.10 Press the "FLOWRATE" key to display the actual flow rate of air through the instrument in cm^3/min. If the displayed flow rate is unacceptable (off by more than 10% of the design flow rate of 18,900 cm^3/min), make sure that all sampling information was entered correctly. Also, check the instrument for loose cables or other obvious problems such as obstructions in the inlet tube or system vacuum tubing. If the flow rate remains unacceptable, fill out the troubleshoot questionnaire provided in Addendum 1 of the operating manual, follow the procedures outlined in Section 13.3 of the operation manual (flow rate audit procedure), and contact the manufacturer for further service information.

10. Replacing the Filter Tape

Caution: NEVER turn the take-up (right side) tape drive manually, or the drive system will be damaged.

The filter tape drive system is illustrated in Figure 6.

10.1 Press the "LOAD TAPE" key. The functioning of this key is described in Section 9.2.1.

10.2 Remove the full take-up reel from the tape drive on the right. Hold the reel firmly to keep it from rotating, loosen the black plastic pronged knob, and slide the reel off the shaft.

10.3 Move the previous supply reel (now empty) from the left tape drive to the right drive. First, loosen the black plastic pronged knob. Next, remove the reel and place it on the now-vacant right tape drive. Be sure to slide the hub onto the shaft so that the shaft pin fits into the slot on the hub. Replace the black knob and tighten snugly.

Caution: Tighten the knob and hold the reel at the same time. Do not apply excessive torque to the drive shaft or the motor may be damaged.

10.4 Complete the tape replacement by following the steps described in Sections 9.2.3 through 9.2.6.

11. Printer Paper Replacement (if applicable)

In instruments with a built-in printer, a full roll of paper is initially supplied with the parallel printer. The printer system is illustrated in Figure 7.

11.1 To replace an empty roll, gently press the printer faceplate latches and pull to remove.

11.2 Locate the metal tab adjacent to the paper sensor (LED), press it, and gently slide the printer out until it stops.

11.3 Remove the old roller and insert a fresh roll of printer paper. The printing surface of the paper is on the outside of the roll. Make certain the roll turns in a counterclockwise direction (referenced from the paper access area) as the paper unrolls.

11.4 Locate the paper slot in front of the small white roller at the bottom of the printer. Insert or feed the paper into the slot, pressing the feed switch until the paper comes out the printer head.

11.5 Gently slide the printer back into the housing and replace the faceplate.

12. Maintenance

The instrument is specifically designed to require minimal maintenance by the user. Four principal areas require attention. Two of these, replacing the filter tape and replacing the parallel printer paper, are discussed in Sections 10 and 11, respectively. Maintenance of the detector and sampling inlet are discussed below.

12.1 Detector

In general, the IISS detector should not be disturbed or removed from its mounting. If testing indicates that the detector surface is contaminated, the surface of the detector may be cleaned, very carefully, by using a suitable cleaning agent supplied by the manufacturer.

Caution: The sensitive area of the detector is delicate and should never be touched, except very lightly with a soft cotton swab.

12.2 Sampling Inlet

After operating for an extended period of time under high mass concentration conditions, the sampling inlet must undergo periodic maintenance. The maintenance procedure is a simple brushing technique to remove accumulated PM from the primary deposition area in the inlet.

Remove the maintenance access port and run the supplied cleaning brush down through the inner tube three times, twisting the handle between the fingers to insure that the brush touches all surfaces. This procedure should be repeated once after every 15 days of sampling operations.

13. Instrument Calibration

The instrument calibration may be checked and changed, if necessary, by the user. This section describes the initial calibration procedures used by the manufacturer for the instrument as well as field audit procedures for the user.

13.1 Mass Determination

13.1.1 The Thermo Beta Gauge system has undergone a complete calibration procedure using aerosol standards in the laboratory. The laboratory calibration involves the generation of monodisperse solid particles injected into the Thermo Wind Tunnel Facility. The concentration level in the facility can be adjusted over the range of 25 to 300 $\mu g/m^3$. The calibration procedure is performed to determine the attenuation coefficient, which is used in the instrument's internal calculations to determine the mass of PM_{10} collected on the filter.

In the calibration procedure, parallel samples of the particle cloud are collected using identical Wedding PM_{10} Inlets. One sample is collected using an appropriate filter substrate and subsequently analyzed

fluorometrically to determine mass concentration. This mass concentration is then used to calculate mass density of particles on the filter tape. The second sample is analyzed using the Thermo Beta Gauge.

The procedure is repeated for a range of particle loadings. The beta attenuation values from the beta gauge are then related to the mass density levels determined from the first sampler. The attenuation coefficient for the beta gauge system is determined by a least-squares fit to a straight line on a plot of the various mass density values vs. corresponding attenuation values.

13.1.2 The manufacturer has performed this calibration procedure to determine generally-applicable attenuation coefficients for instruments that use glass fiber and membrane filter media. (The attenuation coefficient differs slightly depending on filter medium.) Each individual instrument is subjected to the same procedures before shipment to confirm that the generally-applicable attenuation coeffient is accurate for that instrument.

13.1.3 The long half-life of carbon-14 minimizes the need for recalibrating and replacing the beta source. During operation, the instrument continually runs internal diagnostic checks to ensure the proper operation of the source/detector system. The foil calibration feature, available on new or kit-modified units, may be used by the operator to check the calibration of the instrument and, if necessary, to change the calibration constant (attenuation coefficient), using a calibration foil provided by the manufacturer. Follow the instructions for this feature in the Operator's Manual or Manual Addendum.

13.2 Flow Rate

13.2.1 As discussed in Section 7.9, flow control for the instrument is achieved using a critical flow system. Each instrument is calibrated by the manufacturer to determine the instrument-specific flow coefficient that is used in internal calculations to determine the flow rate.

13.2.2 The manufacturer recommends no periodic recalibration by the user. However, a quarterly field audit is required by EPA for any instrument operating as an equivalent method for PM_{10}. The audit procedure is presented in the following section.

13.3 Single-Point External Flow Rate Audit Procedure Using a Flow Transfer Standard

13.3.1 Background. This section describe an external means of auditing the volumetric flow rate of the instrument. An NIST-traceable primary standard is used to calibrate a transfer standard which, in turn, is used to verify the calibration of the instrument's CFD.

Several commercially available transfer standards can be used in this audit procedure. Table 2 lists recommended transfer standards, their applicable flow ranges, references for transfer calibration procedures, and necessary equipment to perform calibrations. (This table has been adopted from the EPA Quality Assurance Handbook for air pollution measurement systems [EPA 600/4-77-027A].) Because the design flow rate for the PM_{10} inlet is 18.9 L/min, the transfer standard should be calibrated in the flow rate range of approximately 15 to 20 L/min. The transfer standard should not cause a pressure drop of more than 4.0" of water.

After selecting a transfer standard, use a leak-tight adapter to connect the transfer standard to the instrument inlet tube as depicted in Figure 8. The adapter may be fabricated by a third party, purchased commercially, or requested from the manufacturer (part no. BG-590).

Normally, a station log book or audit data sheet is used to document audit information. This information normally includes, but is not limited to, an identification of the transfer standard, its serial number, traceability documentation for the audit information, and the ambient temperature and pressure as well as the actual audit data collected during audit procedures.

13.3.2 Audit Procedure.

13.3.2.1 Remove the PM_{10} inlet from the instrument. Install the adapter, referring to Figure 8 for details. Connect the flow transfer standard, as depicted in Figure 9, using suitable tubing.

13.3.2.2 Press the key on the keypad titled "FLOWRATE". (This command will establish necessary audit conditions, such as advancing the tape to a new/unused area of the medium.) Be sure that the filter tape is fully loaded and the sampling module is in the closed position.

13.3.2.3 Allow time for the flow transfer standard to equilibrate, which requires operating the system for approximately 5 min. During this operation, the inlet of the transfer standard is open to ambient air, and the outlet of the transfer standard is connected via the adapter to the inlet tube of the instrument.

13.3.2.4 Record all pertinent parameters required to make calculations from the flow transfer standard's previous calibration. These parameters may include, but are not limited to, ambient pressure and temperature and transfer standard readings such as volts, pressure drop, timings or revolutions, etc. During this time the instrument's computer will calculate, and the LCD will display, a continuing series of flow rate values based upon measured flow conditions. Time-averaged flow rate values will be produced and updated every 2 min. These values allow the operator to make comparisons between readings of the flow transfer standard and the values output to the LCD by the computer.

[Note: New or modified instruments displays flow rates in either standard or actual cm^3/min. Always be sure that the instrument and transfer standard flow rates are in the same terms (actual or standard) before comparing them.]

13.3.2.5 Depending upon the purpose or nature of the audit, the flow rate values displayed on the LCD should agree within a specified percentage of the flow rate transfer standard values. For purposes of flow rate audits required by EPA, all values displayed on the LCD should agree within $\pm 7\%$ of the flow rate transfer standard values. If not, check all calculations to ensure that the flow rates are in the same terms (actual or standard volumes). These values need not necessarily be the design flow rate value of 18.9 L/min.

13.3.2.6 If the flow transfer standard and the instrument do not agree within $\pm 7\%$, refer to Section 9.4.1 (Trouble Shooting). Fill out the detailed trouble-shooting check list in the Addendum to the manufacturer's technical manual (2). In particular, items 4-10 relate directly to flow rate verification. Report these results to Thermo for further information.

13.3.2.7 To compare the design flow rate of 18.9 L/min to the actual flow rate displayed on the LCD, remove both the external transfer standard and the external transfer standard adapter. Replace the PM_{10} inlet onto the inlet tube. Allow approximately 1-2 min for the flow to equilibrate; observe the series of flow rate values displayed on the LCD. Make sure that the instrument is reading the flow rate in *actual* volumetric units, and apply and percentage correction determined in Section 13.3.2.5. These values should be within $\pm 10\%$ of the design flow rate value of 18.9 L/min; if not, refer to Section 13.3.2.6.

13.4 Mass Determination Audit

As noted in Section 13.1.3, the foil calibration feature, available on new or kit-modified units, may be used by the operator to check the calibration of the instrument and, if necessary, to change the calibration constant (attenuation coefficient), using a calibration foil provided by the manufacturer. Follow the instructions for this feature in the Operator's Manual of Manual Addendum.

13.5 Leak Checking

The instrument is assembled and leak checked before it is shipped to the user. No routine definitive leak checking procedures are conducted thereafter. The manufacturer does not recommend positive or negative pressure leak checking because this activity could rupture the gaskets in the sampling module. To check for leaks, examine the vacuum tubing and verify that all connections at the inlet, inlet tube, and vacuum tubing are secure. Examine the filter tape to verify that all spots where PM has been collected are sharply-defined circles. Poorly-defined sample spots indicate leaking sampling module gaskets.

14. Safety

This instrument uses a radioactive source to measure PM_{10}. The Nuclear Regulatory Commission does not require the user of this low-energy, beta-emitting source to be licensed (however, Thermo is so licensed). The beta source is sealed at the factory and should never be opened or tampered with. The entire instrument should be returned to Thermo for service or disposal of the beta source.

15. Performance Criteria and Quality Assurance (QA)

Required quality assurance measures and guidance concerning performance criteria that should be activated within each laboratory are summarized and provided in the following section.

15.1 Standard Operating Procedures (SOPs)

15.1.1 SOPs should be generated by the users to describe and document the following activities in their laboratory:

- Assembly, calibration, leak check, and operation of the specific sampling system and equipment used;
- Preparation, storage, shipment, and handling of the sampler system;
- Purchase, certification, and transport of standard reference materials; and
- All aspects of data recording and processing, including lists of computer hardware and software used.

15.1.2 Specific instructions should be provided in the SOPs and should be readily available to and understood by the personnel conducting the monitoring work.

15.2 QA Program

The user should develop, implement, and maintain a quality assurance program to ensure that the sampling system is operating properly and collecting accurate data. Established calibration, operation, and maintenance procedures should be conducted on a regularly scheduled basis and should be part of the quality assurance program. Calibration verification procedures provided in Section 13, operation procedures in Section 9, and the manufacturer's instruction manual should be followed and included in the QA program. Additional QA measures (e.g., trouble shooting) as well as further guidance in maintaining the sampling system are provided by the manufacturer. For detailed guidance in setting up a quality assurance program, the user is referred to the *Code of Federal Regulations (3)* and the *U. S. EPA Handbook on Quality Assurance (4)*.

16. References

1. Equivalent Method Designation: PM_{10} Beta Gauge Automated Particle Sampler, *Federal Register*, Vol. 56, No. 43, March 5, 1991, pp. 9216-9217.

2. Wedding, J. B., and Weigland, M.A., *Wedding & Associates' PM_{10} (or TSP) Beta Gauge Automated Particle Sampler Operations and Maintenance Manual*. Fort Collins, CO, February 1991.

3. 40 CFR, Part 58, Appendices A and B.

4. *Quality Assurance Handbook for Air Pollution Measurement Systems, Volume II--Ambient Air Specific Methods*, (Interim Edition), EPA 600/R-94/038b.

5. U. S. Environmental Protection Agency, *Quality Assurance Handbook for Air Pollution Measurement Systems, Volume I: A Field Guide for Environmental Quality Assurance*, EPA-600/R-94/038a.

TABLE 1. SUMMARY OF KEYPAD CONTROL KEYS

ROW	COLUMN	LETTERING ON KEY	DESCRIPTION
1	1	PROGRAM SAMPLING SCHEDULE	allows input of the desired start date and start time in which the sampling cycle will begin
1	2	MODULE UP/DN	moves the sampling module one full cycle (i.e., move down and back up)
1	3	TEMP/ PRESS	displays the cabinet temperature and pressure readings on the LCD
1	4	PARALLEL PRINTER ON/OFF	output directed to parallel printer (telemetry output still active)
1	5	SETUP	allows viewing and resetting of the battery-backed real-time clock
2	1	BEGIN SAMPLING	starts or begins the sampling cycle
2	2	COMP. UP/DN	moves the compression rollers one full cycle (i.e., move up and back down)
2	3	BETA COUNT	determines if beta particles are being counted acceptably or unacceptably
2	4	RS-232 PRINTER ON/OFF	output directed to RS-232/serial printer (telemetry output still active)
2	5	STATUS	reads and displays the status of the external I/O devices (i.e., parallel printer, serial printer, RS-232 communications)
3	1	LOAD TAPE	refers user to manual, opens mechanical systems
3	2	TRANS. LEFT/RIGHT	moves the translation assembly one full cycle (i.e., move right and back left)
3	3	FLOW RATE	displays the sampler flow rate reading on the LCD
3	4	RS-232 COMM. ON/OFF	allows setting the RS-232 baud rate for off-site communications
3	5	TROUBLE SHOOT	executes a series of analog, digital, and mechanical diagnostics and displays the results on the LCD
4	1	ADVANCE TAPE	advances the filter media one location
4	2	VACUUM PUMP ON/OFF	tests the vacuum pump
7	1	C	allows input of the calibration constant in battery-backed RAM if lost through battery failure
8	1	D	allows setting the maximum mass concentration limit in battery-backed RAM
8	3	RESET	resets the computer
5	1	A	interrupts sampling at the conclusion of the current sampling/measurement cycle (key enabled only while in sampling mode)
6	2	B	interrupts sampling immediately (key enabled only while in sampling mode)

TABLE 2. RECOMMENDED STANDARDS AND ASSOCIATED EQUIPMENT FOR FLOW RATE AUDITS

Transfer standard[a]	Optimum flow range Q_a	Equipment	Comments	Calibration equation[b,c]	Calibration of transfer standard reference
LFE (laminar flow element)	15.0-20.0 L/min	LFE Thermometer/barometer[d] Manometer[e], Filters, Adapter	Should have filtered air entering LFE. Subject to fluctuations due to temperature changes. Manometer must be used in its temperature range. Must equilibrate.	$(\Delta H_2O)(CF) = Q_{std}$	U. S. Environmental Protection Agency Procedures for Calibrating a Laminar Flow Element (LFE) against an NBS Calibrated LFE: Standard Operating Procedures EMSL/RTP SOP-QAD-003, November 1991
MFM (mass flow meter)	15.0-20.0 L/min	MFM Thermometer/barometer[d] Filters, Adapter	Recommended LCD display for outdoor use. Must equilibrate to ambient conditions.	$(Volts)(CF) = Q_{std}$	Quality Assurance Handbook for Air Pollution Measurement Systems - Vol. II Ambient Air Specific Methods, Section 21, EPA 600/4-77-027A, May 1977.
DGM L/rev (dry gas meter)	15.0-20.0 L/min	DGM Thermometer/barometer[d] Stopwatch,[f] Filters, Adapter	Should time through five revolutions. Repeat each timing 3 times.	$\frac{Volume}{time}(CF) = Q_{std}$	Quality Assurance Handbook for Air Pollution Measurement Systems - Vol. II Ambient Air Specific Methods, Section 3.3 EPA 600/4-77-027B, August 1977.
Orifice	15.0-20.0 L/min	Orifice Thermometer/barometer,[d] Manometer,[e] Filters, Adapter	Good only in range $\Delta P < 8$ in.	$m\left[\Delta H_2O\frac{P_a}{T_a}\right]^{1/2} + b = Q_i$	Quality Assurance Handbook for Air Pollution Measurement Systems - Vol. II Ambient Air Specific Methods, Section 2.2 EPA 600/4-77-027A, May 1977.

[a]Transfer standard should not cause more than 4.0" of H_2O flow resistance to the sampler flow.
[b]Traceable and referenced to EPA standard conditions:

$$Q_a = Q_{std}\left[\frac{T_a}{P_a}\right]\left[\frac{P_{std}}{T_{std}}\right]$$

[c]Calibration equations for determining flow rates may vary from those presented due to the transfer standard calibration relationship. CF = correction factor.
[d]Thermometer capable of measuring temperature to the nearest ± 1C. Barometer capable of accurately measuring barometric pressure to the nearest ± 1 mm Hg.
[e]The design or size of the LFE or orifice will determine the manometer range necessary and the resolution. The manometer resolution must be capable of detecting a flow change of 1% and represent a flow resistance less than 4.0" H_2O.
[f]Stopwatch or timer capable of accurately measuring time intervals of 30 s to several minutes to nearest 0.1 s.

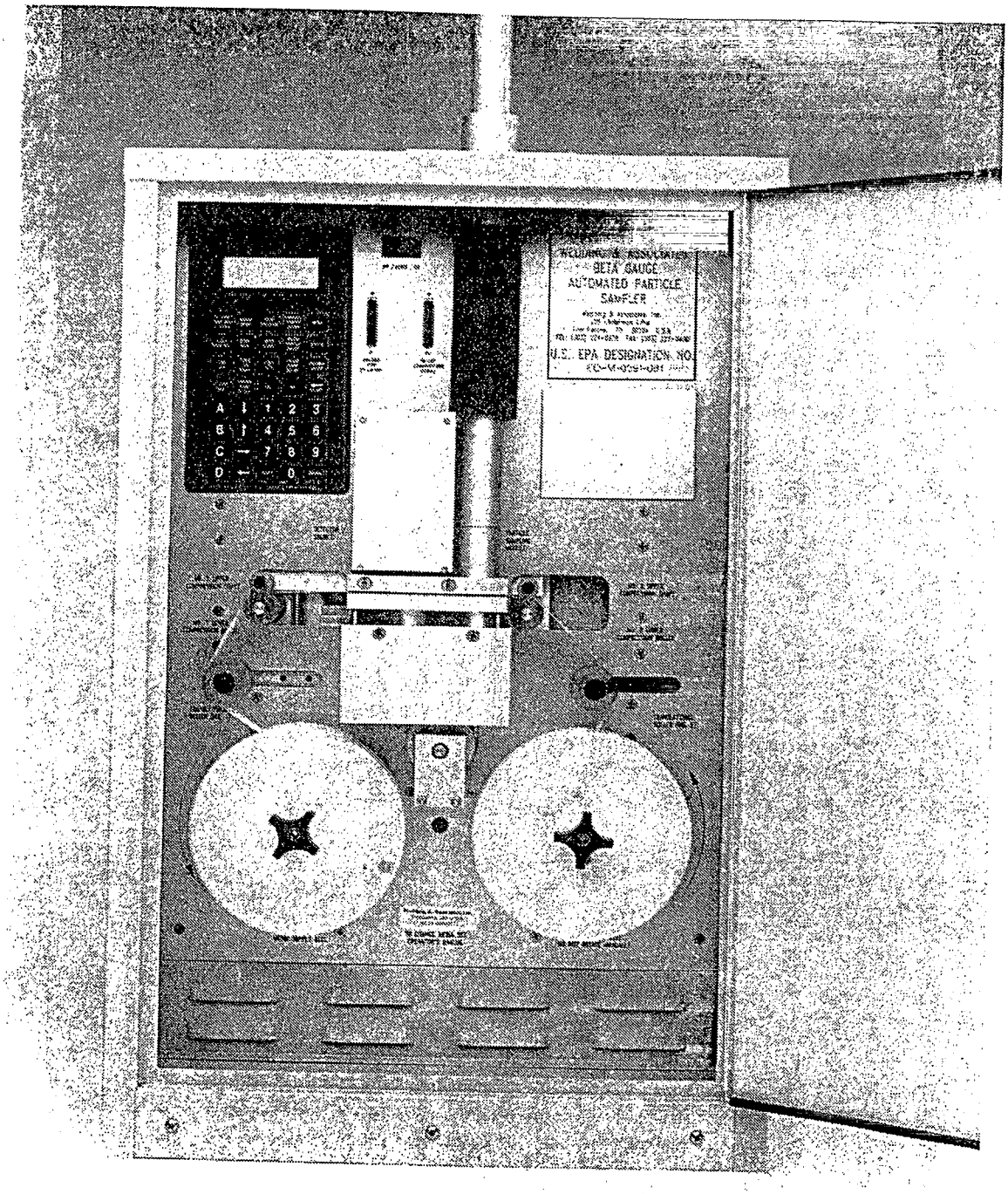

Figure 1. The Thermo Beta Gauge Main Particle Sampling Cabinet.

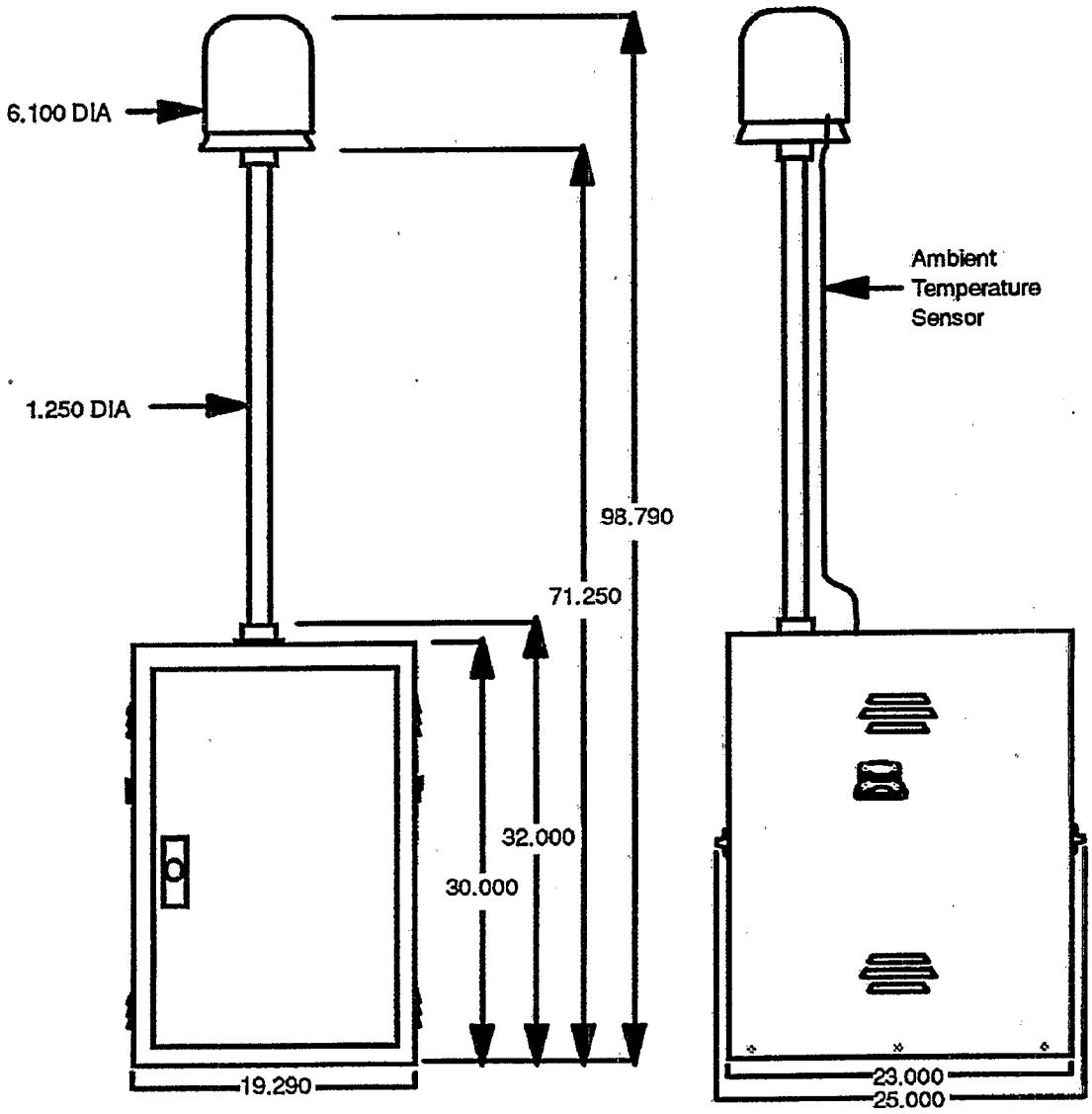

Figure 2. Main Cabinet with PM-10 Inlet and Inlet Tube.

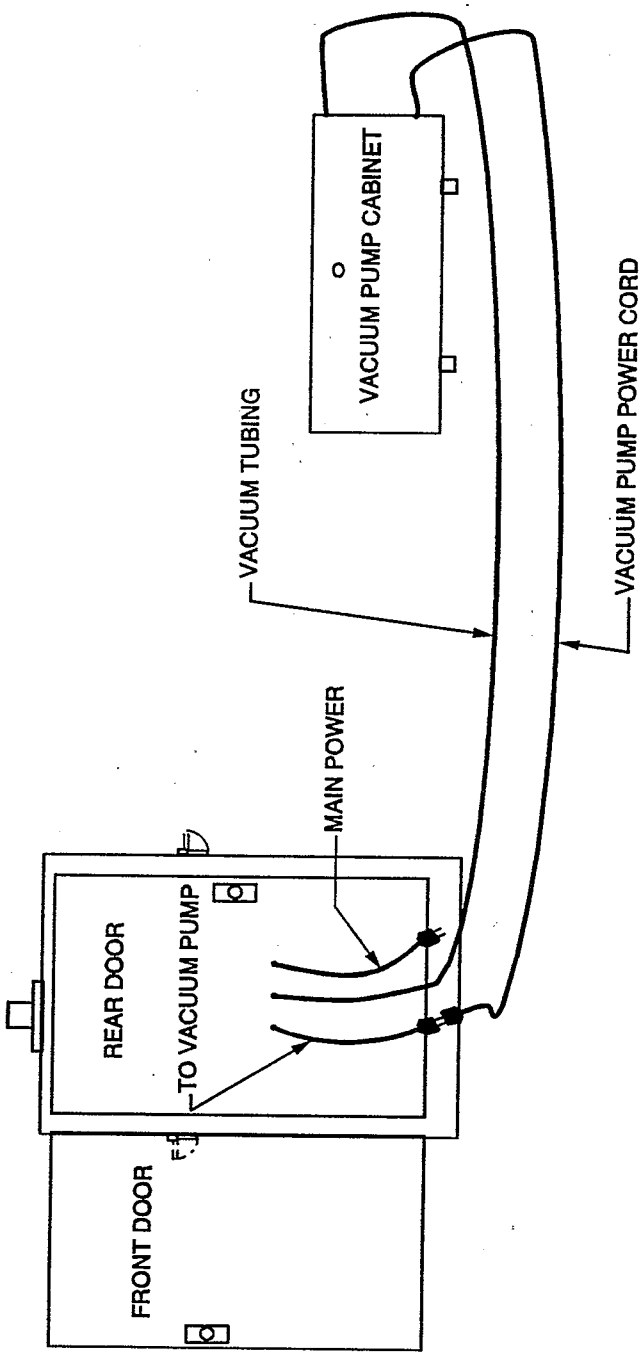

Figure 3. Rear of Main Cabinet with Connections to Vacuum Pump Cabinet.

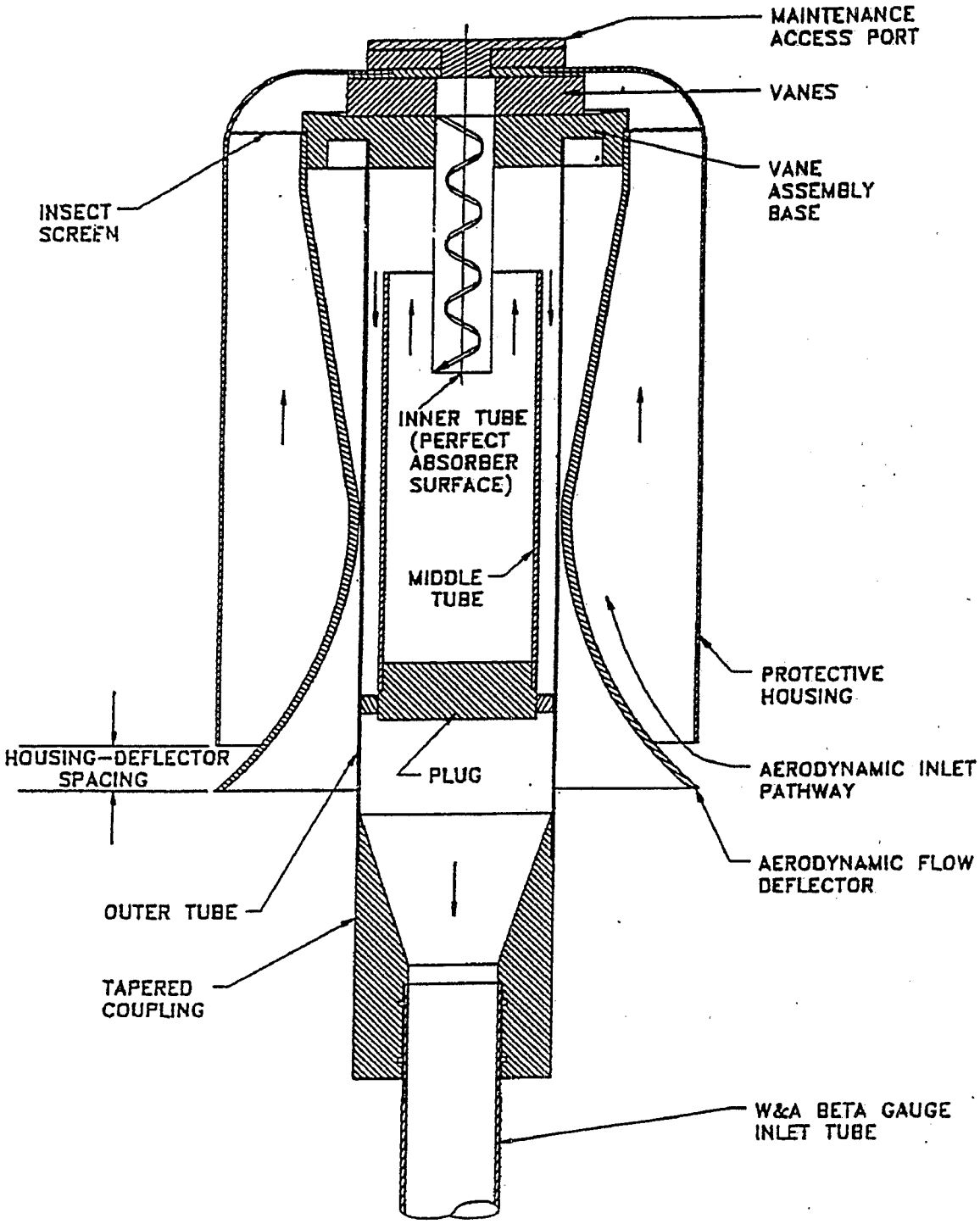

Figure 4. Thermo PM-10 Inlet for the W&A Beta Gauge.

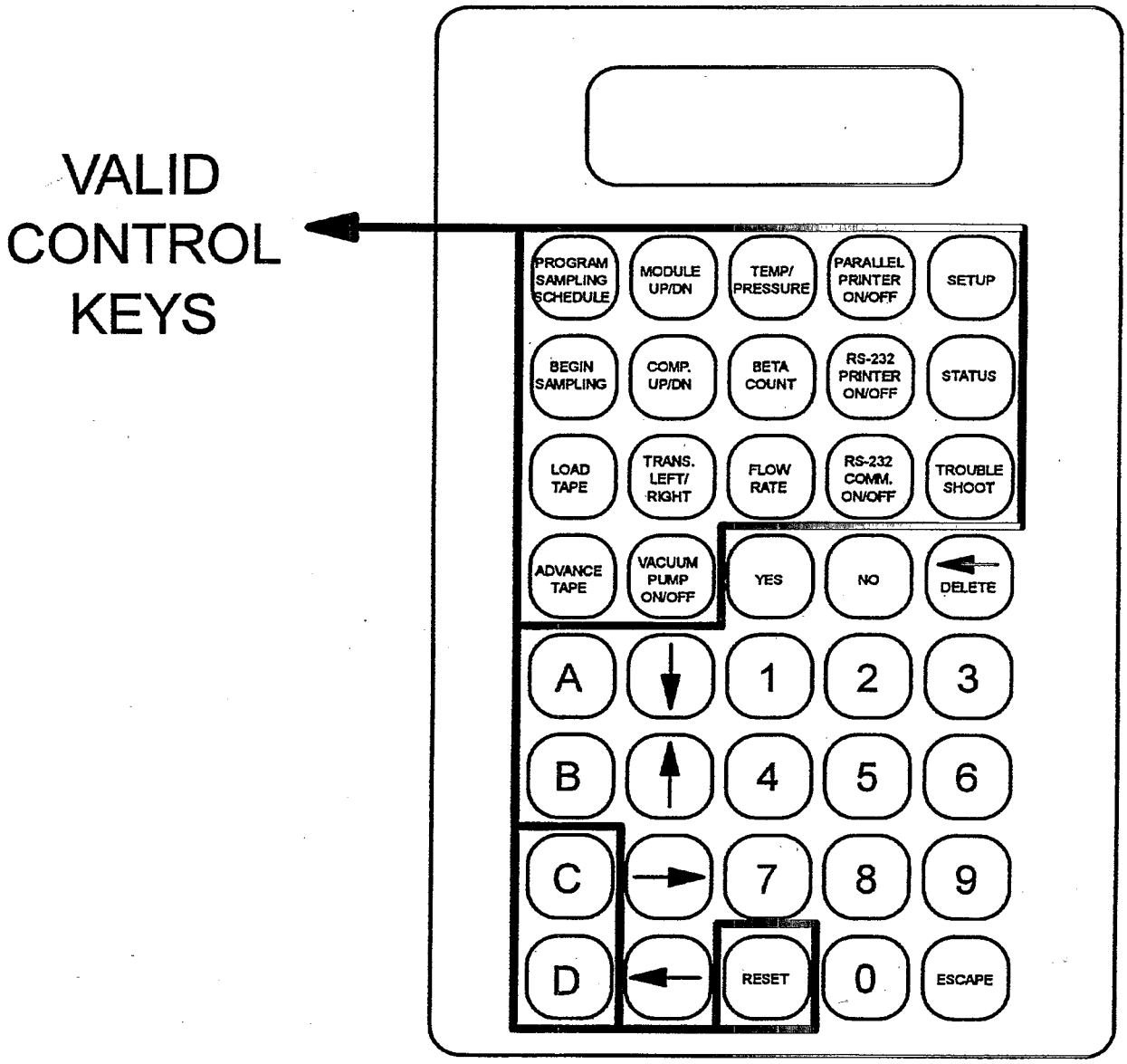

Figure 5. Instrument Keypad.

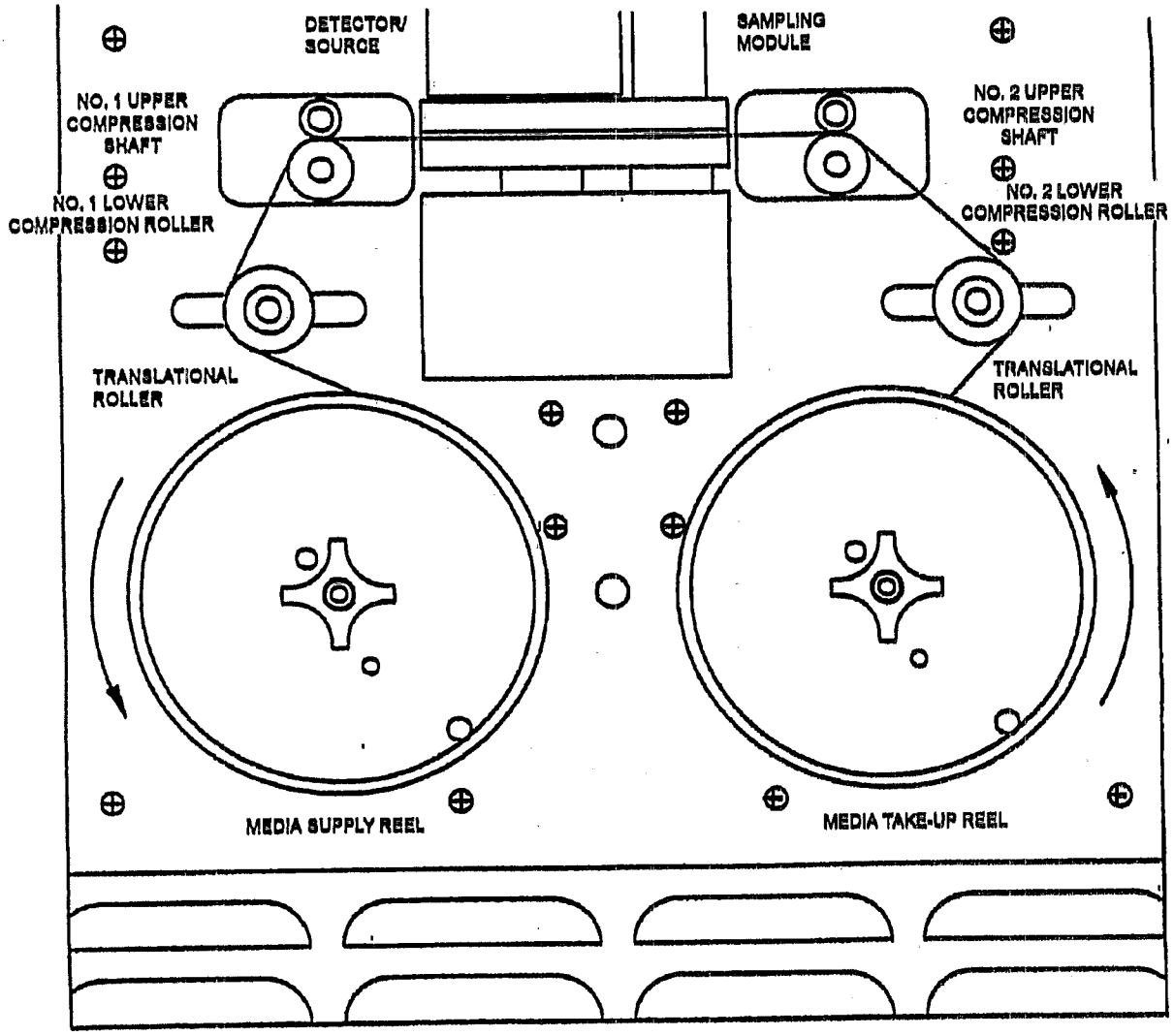

Figure 6. Filter Tape Drive System.

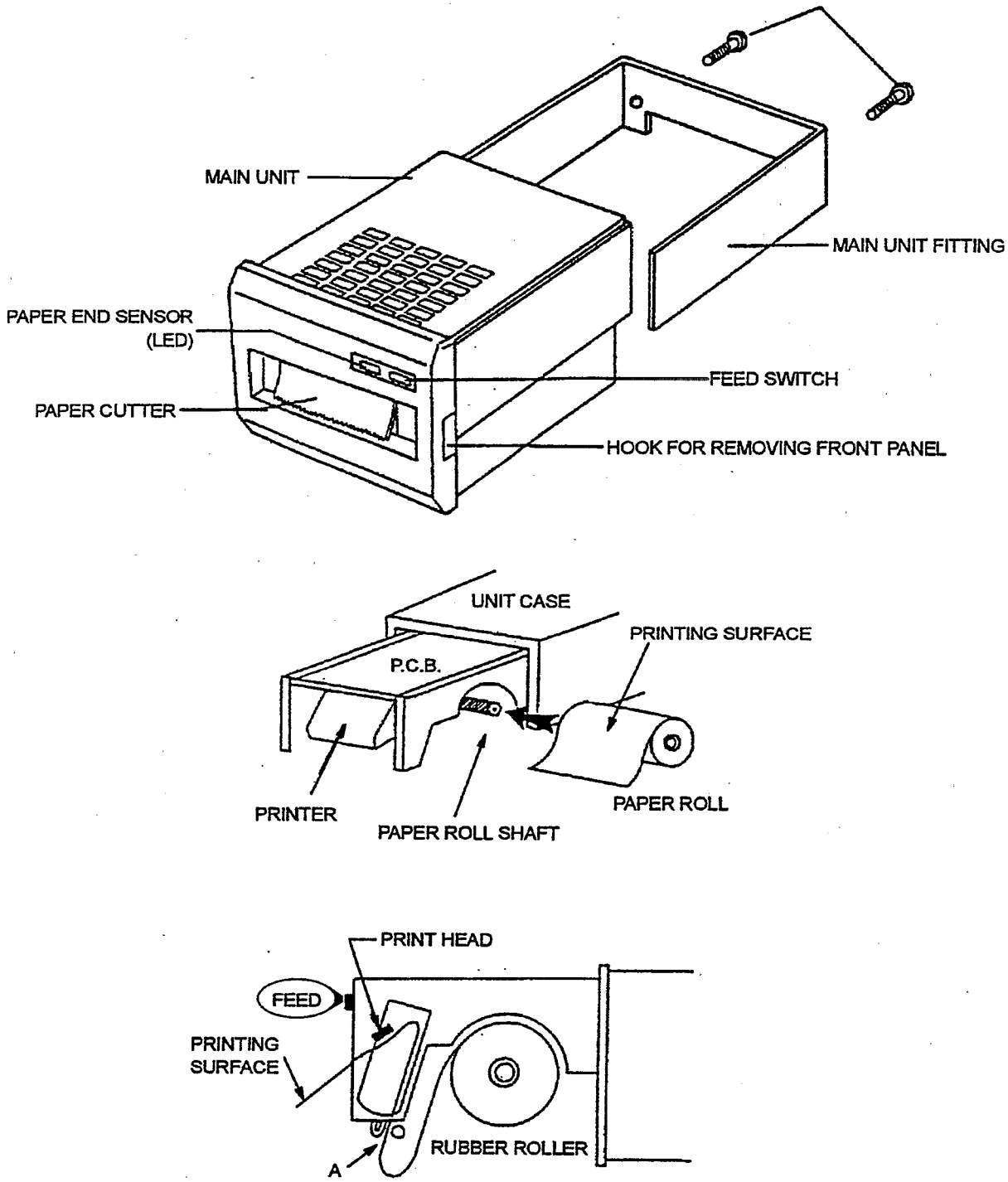

Figure 7. Replacing Paper in the Parallel Printer.

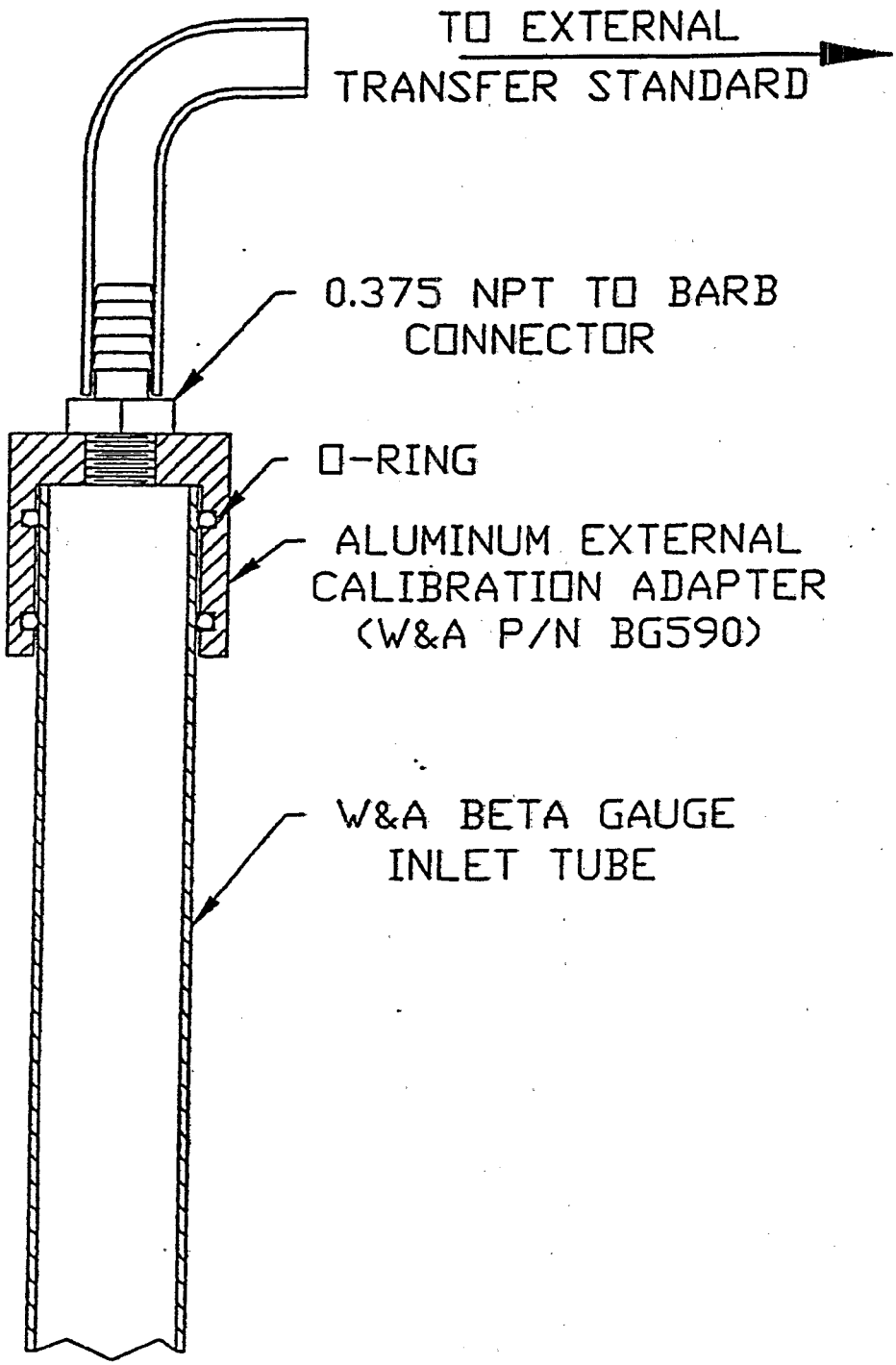

Figure 8. Adapter for External Flow Transfer Standard.

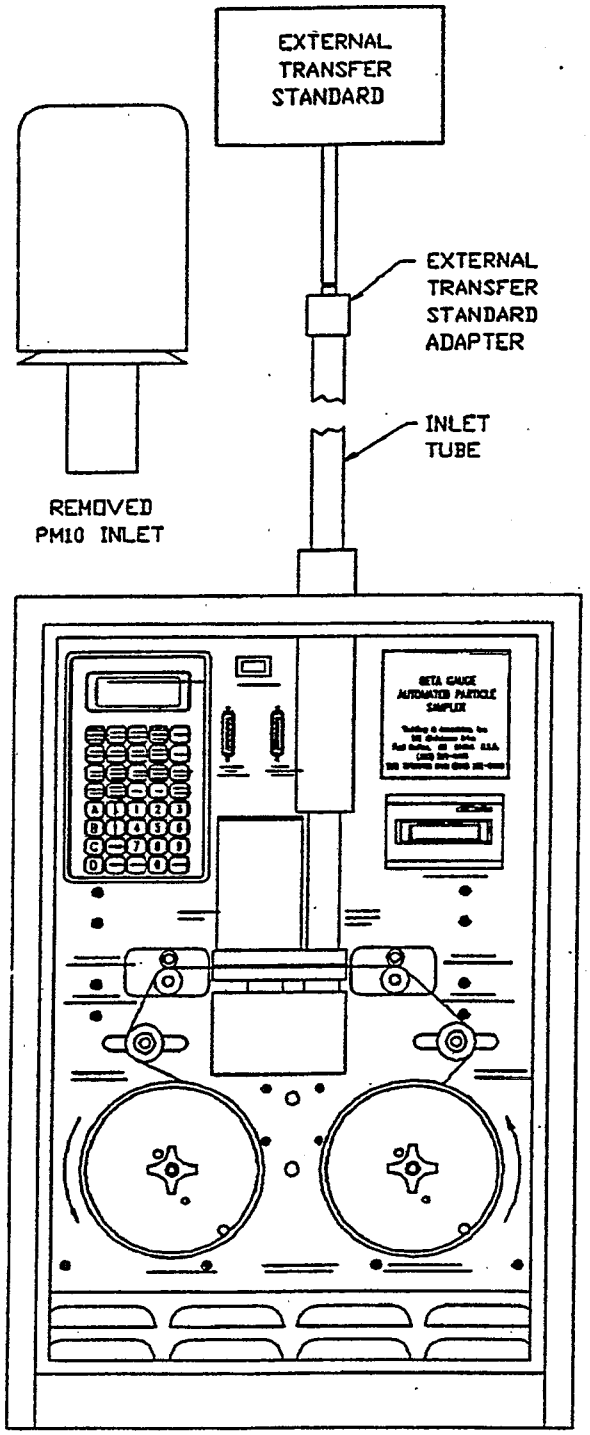

Figure 9. Configuration of External Flow Transfer Standard.

EPA/625/R-96/010a

Compendium of Methods for the Determination of Inorganic Compounds in Ambient Air

Compendium Method IO-1.3

DETERMINATION OF PM_{10} IN AMBIENT AIR USING A CONTINUOUS RUPPRECHT AND PATASHNICK (R&P) TEOM® PARTICLE MONITOR

Center for Environmental Research Information
Office of Research and Development
U.S. Environmental Protection Agency
Cincinnati, OH 45268

September 1996

Method IO-1.3

Acknowledgements

This Method is a part of *Compendium of Methods for the Determination of Inorganic Compounds in Ambient Air* (EPA/625/R-96/060a), which was prepared under Contract No. 68-C3-0315, WA No. 2-10, by Midwest Research Institute (MRI), as a subcontractor to Eastern Research Group, Inc. (ERG), and under the sponsorship of the U.S. Environmental Protection Agency (EPA). Justice A. Manning, Center for Environmental Research Information (CERI), and Frank F. McElroy, National Exposure Research Laboratory (NERL), both in the EPA Office of Research and Development, were the project officers responsible for overseeing the preparation of this method. Other support was provided by the following members of the Compendia Workgroup:

- James L. Cheney, Corps of Engineers, Omaha, NB
- Michael F. Davis, U.S. EPA, Region 7, KC, KS
- Joseph B. Elkins Jr., U.S. EPA, OAQPS, RTP, NC
- Robert G. Lewis, U.S. EPA, NERL, RTP, NC
- Justice A. Manning, U.S. EPA, ORD, Cincinnati, OH
- William A. McClenny, U.S. EPA, NERL, RTP, NC
- Frank F. McElroy, U.S. EPA, NERL, RTP, NC
- William T. "Jerry" Winberry, Jr., MRI, Cary, NC

This Method is the result of the efforts of many individuals. Gratitude goes to each person involved in the preparation and review of this methodology.

Author(s)

- Erich Rupprecht, Rupprecht and Patashnick, Albany, NY
- William T. "Jerry" Winberry, Jr., Midwest Research Institute, Cary, NC

Peer Reviewers

- David Brant, National Research Center for Coal and Energy, Morgantown, WV
- John Glass, SC Department of Health and Environmental Control, Columbia, SC
- Jim Cheney, U.S. Army Corps of Engineers, Omaha, NB
- Charles Rodes, Research Triangle Institute, RTP, NC
- Danny France, U.S. EPA, Region 4, Athens, GA
- David Harlos, Environmental Science and Engineering, Gainesville, FL
- Jim Tisch, Graseby, Cleves, OH
- Michael B. Meyer, Rupprecht and Patashnick, Albany, NY
- Richard Shores, Research Triangle Institute, RTP, NC

DISCLAIMER

This Compendium has been subjected to the Agency's peer and administrative review, and it has been approved for publication as an EPA document. Mention of trade names or commercial products does not constitute endorsement or recommendation for use.

Method IO-1.3
Determination of PM_{10} in Ambient Air
Using a Continuous Rupprecht and Patashnick (R&P)
TEOM® Particle Monitor

TABLE OF CONTENTS

	Page
1. Scope	1.3-1
2. Applicable Documents	1.3-3
2.1 ASTM Standards	1.3-3
2.2 Other Documents	1.3-3
3. Summary of Method	1.3-3
4. Significance	1.3-4
5. Definitions	1.3-5
6. Interferences	1.3-5
7. Apparatus	1.3-6
7.1 TEOM® 1400a Control Unit	1.3-6
7.2 TEOM® 1400a Sensor Unit	1.3-6
7.3 TEOM® Sensor/Preheater Assembly	1.3-6
7.4 TEOM® PM_{10} Inlet	1.3-7
7.5 TEOM® Flow Splitter Assembly	1.3-7
7.6 Electric and Air Cable Assembly	1.3-7
7.7 Filter Cartridge	1.3-7
7.8 Filter Exchange Tool	1.3-7
7.9 Other Components	1.3-8
8. Assembling the TEOM® Series 1400a Monitor	1.3-8
9. Installing the Flow Splitter and PM_{10} Inlet	1.3-9
10. Exchanging the Filter Cartridge	1.3-10
10.1 Loading the Filter Cartridge	1.3-10
10.2 Removing the Filter Cartridge	1.3-11
11. System Operation and Data Storage	1.3-12
11.1 Instrument Start-Up	1.3-12
11.2 Instrument Shutdown and Shipping	1.3-13
11.3 Information Shown on the Main Screen	1.3-13
11.4 When to Exchange TEOM® Filter Cartridges	1.3-15
11.5 Summary of Instrument Operation	1.3-15
12. System Calibration	1.3-16
12.1 Overview of Calibration Procedures	1.3-16
12.2 Flow Controller Calibration (Software)	1.3-16
12.3 Procedures for Analog Calibration	1.3-17
12.4 Flow Controller Calibration (Hardware)	1.3-18
12.5 Mass Transducer Calibration Verification	1.3-20
12.6 Flow Audit Procedure	1.3-21
13. Method Safety	1.3-22
14. Performance Criteria and Quality Assurance (QA)	1.3-22
14.1 Standard Operating Procedures (SOPs)	1.3-22
14.2 QA Program	1.3-23
15. REFERENCES	1.3-23

Chapter IO-1

CONTINUOUS MEASUREMENT OF SUSPENDED PARTICULATE MATTER (SPM) IN AMBIENT AIR

Method IO-1.3
DETERMINATION OF PM_{10} IN AMBIENT AIR USING A CONTINUOUS RUPPRECHT AND PATASHNICK (R&P) TEOM® PARTICLE MONITOR

1. Scope

1.1 The area of toxic air pollutants has been the subject of interest and concern for many years. Recently the use of receptor models has resolved the elemental composition of atmospheric aerosol into components related to emission sources. The assessment of human health impacts resulting in major decisions on control actions by federal, state and local governments is based on these data. Accurate measures of toxic air pollutants at trace levels are essential to proper assessment.

1.2 Suspended particulate matter (SPM) in air generally is a complex, multi-phase system of all airborne solid and low vapor pressure liquid particles having aerodynamic particle sizes from below 0.01 μm to 100 μm and larger. Historically, SPM measurement has concentrated on total suspended particulates (TSP), with no preference to size selection.

1.3 The U. S. Environmental Protection Agency (EPA) reference method for TSP is codified at 40 CFR 50, Appendix B. This method uses a high-volume sampler (hi-vol) to collect particles with aerodynamic diameters of approximately 100 μm or less. The hi-vol samples 40 and 60 ft^3/min of air with the sampling rate held constant over the sampling period. The high-volume design causes the TSP to be deposited uniformly across the surface of a filter located downstream of the sampler inlet. The TSP high volume can be used to determine the average ambient TSP concentration over the sampling period, and the collected material subsequently can be analyzed to determine the identity and quantity of inorganic metals present in the TSP.

1.4 Research on the health effects of TSP in ambient air has focused increasingly on those particles that can be inhaled into the respiratory system, i.e., particles of aerodynamic diameter less than 10 μm. Researchers generally recognize that these particles may cause significant, adverse health effects.

1.5 On July 1, 1987, the EPA promulgated a new size-specific air quality standard for ambient particulate matter. This new primary standard applies only to particles with aerodynamic diameters $\leq$10 μm (PM_{10}) and replaces the original standard for TSP. To measure concentrations of these particles, the EPA also promulgated a new federal reference method (FRM). This method is based on the separation and removal of non-PM_{10} particles from their size distribution, followed by filtration and gravimetric analysis of PM_{10} mass on the filter substrate.

1.6 The new primary standard (adopted to protect human health) limits PM_{10} concentrations to 150 μg/std m^3, averaged over a 24-h period. These smaller particles are able to reach the lower regions of the human respiratory tract and, thus, are responsible for most of the adverse health effects associated

with suspended particulate pollution. The secondary standard, used to assess the impact of pollution on public welfare, has also been established at 150 $\mu g/std\ m^3$.

1.7 Monitoring methods for particulate matter are designated by the EPA as reference or equivalent methods under the provisions of 40 CFR Part 53, which was amended in 1987 to add specific requirements for PM_{10} methods. Part 53 sets forth functional specifications and other requirements that reference and equivalent methods for each criteria pollutant must meet, along with explicit test procedures by which candidate methods or samplers are to be tested against those specifications. General requirements and provisions for reference and equivalent methods are also given in Part 53, as are the requirements for submitting an application to the EPA for a reference or equivalent method determination.

1.8 Under the Part 53 requirements, *reference methods* for PM_{10} must use the measurement principle and meet other specifications set forth in 40 CFR 50, Appendix J. They must also include a PM_{10} sampler that meets the requirements specified in Subpart D of 40 CFR 53. Appendix J specifies a measurement principle based on extracting an air sample from the atmosphere with a powered sampler that incorporates inertial separation of the PM_{10} size range particles followed by collection of the PM_{10} particles on a filter over a 24-h period. The average PM_{10} concentration for the sample period is determined by dividing the net weight gain of the filter over the sample period by the total volume of air sampled. Other specifications are prescribed in Appendix J for flow rate control and measurement, flow rate measurement device calibration, filter media characteristics and performance, filter conditioning before and after sampling, filter weighing, sampler operation, and correction of sample volume to EPA reference temperature and pressure. In addition, sampler performance requirements in Subpart D of Part 53 include sampling effectiveness (the accuracy of the PM_{10} particle size separation capability) at each of three wind speeds and "50% cutpoint" (the primary measure of 10-micron particle size separation). Field tests for sampling precision and flow rate stability are also specified. In spite of the instrumental nature of the sampler, this method is basically a manual procedure, and all designated reference methods for PM_{10} are therefore defined as manual methods.

1.9 The protocol for operating the only continuous particulate mass monitor that directly measures particulate mass at concentrations between 5 $\mu g/m^3$ and several g/m^3 on a real-time basis is described in this method.

1.10 The Ruppecht and Patashnick TEOM® continuous monitor calculates mass rate, mass concentration, and total mass accumulation on exchangeable filter cartridges that are designed to allow for future chemical and physical analysis. In addition, the instrument provides hourly and daily averages.

1.11 The methodology detailed in this document is currently employed by such U.S. research organizations as the U.S. EPA, Argonne National Laboratory, R.J. Reynolds Tobacco Company, and Philip Morris, Inc. for indoor and outdoor air quality studies, aerosol behavior studies, and cigarette smoke behavior studies. It is used for ambient monitoring by agencies such as the California Air Resource Board (CARB), South Coast Air Quality Management District (SCAQMD), Northwest Air Pollution Authority, Puget Sound Air Pollution Control District and many others throughout the United States.

2. Applicable Documents

2.1 ASTM Standards

- D1356 *Definitions of Terms Related to Atmospheric Sampling and Analysis.*

2.2 Other Documents

- Technical Manuals (1-2).
- Laboratory and Field Studies (3-19).

3. Summary of Method

3.1 Particle-laden air is drawn into the TEOM® monitor through an air inlet followed by an exchangeable filter cartridge, where the particulate mass collects. The inlet system may or may not be equipped with the optional sampling head, which pre-separates particles at either a 2.5 or 10 μm diameter.

3.2 The filtered air then proceeds through the sensor unit, which consists of a patented microbalance system.

3.3 As the sample stream moves into the microbalance system (filter cartridge and oscillating hollow tapered tube), it is heated to the temperature specified by the control unit. This is done to minimize the deposition of water due to changes in ambient humidity.

3.4 The control unit contains the automatic flow controller, which pulls the sample stream through the monitor at flow rates between 0.5 and 5 Lpm. The hollow tube is attached to a platform at its wide end and is vibrated at its natural frequency.

3.5 As particulate mass gathers on the filter cartridge, the tube's natural frequency of oscillation decreases. The electronic microbalance system continually monitors this frequency.

3.6 Based upon the direct relationship between mass and frequency, the instrument's microcomputer computes the total mass accumulation on the filter, as well as the mass rate and mass concentration, in real time.

3.7 The control unit contains software that allows the user to define the operating parameters of the instrumentation through menu-driven routines.

3.8 During sample collection, the program plots total mass, mass rate and/or mass concentration, and operating conditions on the 4-line liquid crystal display (LCD). Figure 1 illustrates the assembled TEOM® control and sensor unit.

4. Significance

4.1 SPM in ambient air generally is a complex, multi-phase system of all airborne solid and low vapor pressure particles from below 0.01 μm up to 100 μm and larger. Historically, measurement of particulate matter (PM) has concentrated on TSP, with no preference to size selection. Research on the health effects of TSP in ambient and outdoor air has focused increasingly on particles that can be inhaled into the respiratory system, i.e., particles of aerodynamic diameter less than 10 μm. Researchers generally recognize that these particles may cause significant, adverse health effects.

4.2 Particles are formed by two processes: (1) the grinding or atomization of matter and (2) the nucleation of supersaturated vapors. The particles formed in the first process are products of direct emissions into the air, whereas particles formed in the second process usually result from reaction of gases, then nucleation to form secondary particles. Particle growth in the atmosphere occurs through gas-particle interactions and particle-particle (coagulation) interaction.

4.3 Recent studies involving particle transport and transformation suggest strongly that atmospheric particles commonly occur in two distinct modes. The fine, or accumulation, mode is attributed to the growth of particles from the gas phase and subsequent agglomeration, while the coarse mode is made up of mechanically abraded or ground particles. Particles that have grown from the gas phase, either because of condensation, transformation, or combustion, occur initially as very fine nuclei--0.05 μm. These particles tend to grow rapidly to accumulation mode particles around 0.5 μm, which are relatively stable in the air. Because of their initially gaseous origin, this range of particle sizes includes inorganic ions such as sulfate, nitrate, ammonia, combustion-form carbon, organic aerosols, metals (Pb), cigarette smoke by-products, and consumer spray-products.

4.4 Coarse particles, on the other hand, mainly are produced by mechanical forces such as crushing and abrasion. Coarse particles, therefore, normally consist of finely divided minerals such as oxides of aluminum, silicon, iron, calcium, and potassium. Coarse particles of soil or dust result from entrainment, the motion of air, or other mechanical action within their area. Since the mass of these particles is normally >3 μm, their retention time in the air parcel is shorter than the fine particle fraction.

4.5 The composition and sources of coarse particles are not as thoroughly studied as those of fine particles; coarse particles are more complex than fine particles and similar in chemical composition. However, dozens of particle types, such as soil, limestone, flyash, and oil soot, are possible to recognize based on microscopic examination.

4.6 Outdoor concentrations of TSP are of major concern in estimating air pollution effects on visibility, ecological and material damage, and health effects. Consequently, a continuous particulate monitor has been developed to allow mass measurement of particulate concentration on a real-time basis. The monitor utilizes the filter-based measurement system for providing real-time mass monitoring capability.

5. Definitions

[Note: Definitions used in this document and any user prepared SOPs should be consistent with ASTM D1356. All abbreviations and symbols are defined with this document at the point of use.]

5.1 Air Pollution. The presence of unwanted material in the air. The term "unwanted material" here refers to material in sufficient concentrations, present for a sufficient time, and under circumstances to interfere significantly with comfort, health, or welfare of persons or with the full use and enjoyment of property.

5.2 Coarse and Fine Particles. Coarse particles are those with diameters (aerodynamic) greater than 2.5 μm that are removed by the sampler's inlet; fine particles are those with diameters (aerodynamic) less than 2.5 μm. These two fractions are usually defined in terms of the separation diameter of a sampler.

5.3 Filter. A porous medium for collecting particulate matter.

5.4 Mass Concentration. Concentration expressed in terms of mass of substance per unit volume of gas.

5.5 Particle. A small discrete mass of solid or liquid matter.

5.6 Particle Concentrations. Concentration expressed in terms of number of particles per unit volume of air or other gas. NOTE: On expressing particle concentration the method of determining the concentration should be stated.

5.7 Sampling. A process consisting of the withdrawal or isolation of a fractional part of a whole. In air or gas analysis, the separation of a portion of an ambient atmosphere with or without the simultaneous isolation of selected components.

5.8 Sampling, Continuous. Sampling without interruptions throughout an operation or for a predetermined time.

6. Interferences

6.1 The R&P TEOM® primary operating mechanism is the microbalance system, which relies upon changes in the frequency of an oscillating tapered element to determine changes in the particulate mass collected. Because of this characteristic, the instrument should be isolated from mechanical noise and should be located in the area to be measured so that external objects are not likely to disturb the instrument's enclosure or the air sampling tube. Additionally, the instrument should be located in an environment with minimal temperature fluctuations. The units operate effectively in environments with temperatures ranging between 7.2 and 52°C.

6.2 Although the instrument may retrieve a sample from indoor or outdoor environments, the sample stream temperature should be maintained within as narrow a range as possible. Large abrupt temperature fluctuations (7-8°F/min) of the sample stream may cause measurement accuracy to decrease due to the inlet system's inability to adjust the temperature of the sample to that specified by the software before travelling to the microbalance system. Sample temperature can range from ambient to 60°C.

[Note: For aerosols, such as cigarette smoke, that may contain substantial fractions of dissolved semivolatiles, heating the aerosol may decrease the apparent mass and may introduce errors into subsequent chemical analyses. As a precaution the TEOM® may be operated at low inlet temperatures (-30-35°C).]

7. Apparatus

The R&P TEOM® Series 1400a Ambient Particulate Monitor is comprised of two main components (see Figure 1): the TEOM® 1400a Control Unit and the TEOM® Sensor Unit. However, when purchased, these units are not fully assembled. Therefore, the following section describes the components contained in these two main units which are available separately as needed.

7.1 TEOM® 1400a Control Unit

The control unit (see Figure 2) houses the mass flow controllers and the control electronics for operation of the TEOM® instrument.

7.1.1 The main electrical and air connections to the main power supply, the auxiliary control, and the main vacuum pump connections are located on the back panel.

7.1.2 The main power switch, status light, and the keypad for operating the control unit are located on the front panel. The keypad allows the user to define and adjust system parameters and functions once the software has been uploaded to the control unit. The status light flashes when there is a problem with mass flow rate, temperature, or filter loading.

7.2 TEOM® 1400a Sensor Unit

7.2.1 The sensor unit houses the mass transducer sensing unit and an electronic circuit board with the appropriate wiring for electricity and frequency signal output (inside enclosure on left hand side). Located on the outside left panel are the main electric and air connections. The enclosure houses the mass transducer sensing unit, sensor unit heater, and an amplifier circuit board that processes all signals from the mass transducer.

7.2.2 The back side of the enclosure contains a shipping latch that secures the sensor/preheater unit when moving or shipping the instrument.

7.3 TEOM® Sensor/Preheater Assembly

7.3.1 The TEOM® sensor/preheater assembly (see Figure 3) consists of the sensor inlet and the microbalance. The sensor inlet consists of a ½" diameter metal tube. The upper end of the tube is

inserted directly into the flow splitter assembly, which allows a small portion of the total flow to be drawn through the sensor unit and the remaining air sample to be drawn through the bypass line. The lower end of the sensor inlet tube is connected to the microbalance top outer wall. The connection accommodates an air temperature probe assembly that controls the temperature of the air in the inlet tube. The ½" metal tubing between the flow splitter and the sensor unit is surrounded by thick insulation to help maintain a constant temperature of the inlet air stream.

7.3.2 The microbalance is an insulated cylindrical enclosure that houses a metal cylinder (the sensor head) the size of the inlet tube. The metal cylinder contains an oscillating tapered element, an electronic feedback system, and a filter cartridge. The tapered element is attached to a platform at its wide end (bottom) and has a small metal tip onto which the filter cartridge sits. The electronic feedback system consists of an amplifier board, which maintains the elements oscillation, and the electronics, which allow frequency signals to be transcribed to mass units. At the bottom of the microbalance, a silicone tube, which is connected to the mass flow controller in the control unit, carries the air sample.

7.4 TEOM® PM_{10} Inlet

The PM_{10} inlet (see Figure 4) is designed to allow only particulate matter $\leq 10\ \mu m$ in diameter to remain suspended in the sample air stream as long as the flow rate of the system is maintained at 16.67 L/min. The monitor can be operated as a total suspended particulate monitor or as a PM_{10} monitor.

7.5 TEOM® Flow Splitter Assembly

The flow splitter assembly (see Figure 5) consists of two concentric hollow metal tubes. The outer tube is approximately 24" long and 1½" in diameter. The inner tube is approximately 12" long and ½" in diameter. The top of the assembly (outer tube) is configured to accommodate the PM_{10} Inlet (normal use) or the flow audit adapter (for calibration only). The lower end of the assembly consists a pipe fitting that allows for the inner tube to enter into the outer tube and make a leak-proof connection. Also at the bottom of the flow splitter assembly is the bypass air outlet. The inner tube is connected directly to the inlet tube of the sensor unit, and the bypass air outlet is connected to the bypass air line.

7.6 Electric and Air Cable Assembly

The electric and air cable assembly is used to connect the control unit to the sensor unit.

7.7 Filter Cartridge

The filter cartridge (see Figure 6) is a ½" diameter thin aluminum base (foil-like) assembly. The foil is crimped around the filter edges to contain it. Attached to the aluminum base is a water resistant plastic cone that fits onto the metal tip of the oscillating element.

7.8 Filter Exchange Tool

The filter exchange tool is a small fork with a 4" long handle, as illustrated in Figure 6. The lower part of the tool has two perpendicular connections. The top connection is an aluminum disc that is slightly smaller than ½" in diameter, which is made to fit over the filter face when assembling and disassembling.

The bottom connection is a "U-shaped" fork. The tines of the fork straddle the cone of the filter cartridge during assembling and disassembling.

7.9 Other Components

The TEOM® has both a coarse and fine filter located within the sensor unit to protect additional components downstream. In addition, an oil-free pump is located in this unit to provide a constant vacuum during sampling.

8. Assembling the TEOM® Series 1400a Monitor

The TEOM® 1400a Monitor consists of two components: (1) the control unit and (2) the sensor/preheater unit. A schematic diagram of the flow system is illustrated in Figure 7.

8.1 If the barbed hose fitting is not installed, attach the supplied barbed hose fitting to the back of the TEOM® control unit at the connection marked "Pump", as illustrated in Figure 8.

8.2 Make sure that the voltage setting on the card below the fuse (see Figure 8) is appropriate for installation. If not, remove the card and reinsert with proper voltage facing upward. The allowable voltage settings are 120 and 240 VAC. Contact your distributor representative if you need additional information about the proper voltage setting.

8.3 Insert the power cord into the socket.

8.4 Install the mating section of the mounting bracket (packaged separately from the control unit) by sliding the slotted end onto the Mounting Bracket section on the control unit and inserting the in-line filters into the push-to-connect fitting. Secure the two parts of the bracket together with thumb screws.

8.5 Attach the bypass fine particulate assembly (the dual-filter device) to the bypass flow fitting on the Mounting Bracket.

8.6 Identify the end of the electric and air connecting cable whose electrical connection fits into the "Sensor Unit" connector of the control unit. Insert the ¼" sensor flow line into the sensor flow fitting on the Mounting Bracket. Insert the ⅜" bypass flow line into the open end of the bypass fine particulate assembly.

8.7 Attach the 28-pin electrical connector.

8.8 Attach an oil-free vacuum pump to the barbed hose fitting using a vacuum hose of at least ¼" inside diameter. The pump must be capable of maintaining 20" Hg vacuum at a flow of 16.7 L/min.

8.9 Install the sensor unit on a sturdy surface below the location of the flow splitter assembly. The sensor inlet should be directly below the flow splitter. Otherwise the particulate may settle out of the air stream and collect on the tubing walls.

8.10 Route the electric and air connecting cable to the sensor unit (see Figure 10) so that the cable is protected and the sample and bypass tubings are not kinked.

8.11 Make the electrical connection of the electric and air connecting cable at the 28-pin connector on the left panel of the TEOM® Sensor Unit (see Figure 10).

8.12 Connect the end of the small air tube (¼" diameter) to the air outlet on the left side wall of the sensor unit.

8.13 Remove the end cap from the top of the air inlet on the sensor unit.

8.14 Carefully remove all packaging materials, such as molded foam pack, from within the enclosure of the sensor unit. Then release the shipping latch located on the back panel of the sensor unit (see Figure 9). To do so, hold the mass transducer with one hand and use a coin or screwdriver in the other hand to turn the slot in the shipping latch counter clockwise. To retract the shipping latch fully, continue turning the slot until it will not turn any further. The mass transducer should be able to swing freely when it is unlocked.

8.15 Make sure that the electrical connection and air connection are in their attached positions, as illustrated in Figure 10.

[Note: The Series 1400a monitor uses push-to-connect fittings for all air lines. To engage the connection, the air tube must be pushed completely into the fitting so that the tube cannot be pulled out. To disengage the connection, push the small collar toward the fitting and pull on the tube.]

9. Installing the Flow Splitter and PM_{10} Inlet

The isokinetic flow splitter is used in combination with a second automatic flow controller to divide the sample flow into two components after the air steam passes through the PM_{10} sample inlet: 1) a main flow of 3 L/min for the TEOM® mass transducer and 2) an auxiliary flow of 13.67 L/min that is maintained by the second flow controller. The flow splitter should be located directly above the sample inlet of the TEOM® Sensor Unit (see Figure 11).

9.1 Loosen the nut on the bottom of the flow splitter and adjust the inner tube so that the end of the inner tube is 15.5 cm (6") from the open end of the outer tube (see Figure 5). Tighten the nut. –

9.2 Mount flow splitter assembly in optional tripod or other rigid mounting device.

9.3 Drill a hole in roof to allow the sample tube to connect the flow splitter assembly and the TEOM® sensor unit (make sure the sensor unit can be placed directly underneath the flow splitter assembly).

9.4 Connect any sample tube extensions to exit of flow splitter and to the sample inlet on the TEOM® Sensor Unit with the push-to-connect fittings.

9.5 Install the bypass flow tubing (⅜" diameter) from the control unit to the bypass flow exit of the flow splitter through the same hole in the roof as the sample tube (see Figure 11).

9.6 Weatherseal the opening in the roof to avoid leaks.

9.7 Install the rain collection jar in the port on the side of the PM_{10} sample inlet.

9.8 Install the PM_{10} sample inlet over the open end of the flow splitter assembly.

9.9 Reverify that the inlet to the PM_{10} sample inlet is 1.8 to 2.1 m above the roof.

10. Exchanging the Filter Cartridge

Upon arrival of a new TEOM® series 1400a Ambient Particulate Monitor, the sensor unit will not be equipped with a filter cartridge. Therefore, follow the filter exchange procedures outlined below to prepare the instrument for operation. The new instrument comes with a box of 20 blank filter cartridges. Before proceeding with the exchange, some special precautions must be taken:

- Do not handle new TEOM® filter cartridges with fingers. Use the filter tool provided with the instrument to exchange filters.
- Do not exchange filter cartridges when the TEOM® system is taking data, i.e., when the instrument is in the Run Mode. Filter cartridges should be exchanged either when the instrument is in the Initialization Mode, Data Stop Mode, or when the instrument is turned off.
- Keep the sample pump running to facilitate filter exchange.
- Store the box of filter cartridges and filter exchange tool inside the sensor unit enclosure to provide a warm, dry, safe storage location.

10.1 Loading the Filter Cartridge

10.1.1 Open the door of the sensor unit.

10.1.2 Locate the horizontal handle on the TEOM® mass transducer (shown in its upward position in Figure 3). Carefully rotate this handle upward. The TEOM® mass transducer then swings into its filter changing position (see Figure 6).

[Note: When the mass transducer is in this open position, the tapered element automatically stops vibrating to facilitate filter exchange.]

10.1.3 Remove a clean filter cartridge from its shipping/storage box using the filter exchange tool. The tool's upper metal disc should cover the filter's surface, while the lower tines of the fork should straddle the hub of the filter base.

10.1.4 Hold the filter exchange tool in line with the tapered element and lightly insert the hub of the filter cartridge onto the tip of the tapered element, as illustrated in Figure 12. Ensure that the filter is seated properly. The tools metal disc should be centered over the filter before pressure is applied. Apply

downward pressure to set it firmly in place, which will reduce the chances of distorting the crimped filter (see Figure 6).

10.1.5 Remove the filter exchange tool by retracting it sideways until it clears the filter. Do not disturb the filter.

10.1.6 Gently move the horizontal handle to the down position to close the mass transducer. Allow the springs to pull it closed for the last centimeter so that the distinct sound of metal-to-metal contact is heard.

[Note: Do not let the TEOM® mass transducer slam closed from the full open position.]

10.1.7 Close and latch the door to the TEOM® Sensor Unit. Keep the door open for as short a time as possible to minimize the temperature upset to the system.

10.1.8 If the instrument is turned on, reset it by pressing <F1> or <RUN> on the keypad of the TEOM® Control Unit.

10.1.9 After 5 min, open the sensor unit and mass transducer again. Press straight down on the filter cartridge with the bottom of the filter exchange tool. This pressure ensures that the filter cartridge is properly seated after is has experienced an increase in temperature. Then close the mass transducer and enclosure.

10.2 Removing the Filter Cartridge

[Note: Filter lifetime depends upon the nature and concentration of the particulate sampled. The lifetime is determined by the filter loading, as shown on the status line of the Main Screen of the TEOM® Control Unit. TEOM® filter cartridges must be exchanged when the filter loading value approaches 100%, which generally corresponds to a total mass accumulation of approximately 3 to 5 mg (about 14 to 21 days of sampling at an average PM_{10} concentration of 50 $\mu g/m^3$).]

10.2.1 Open the door of the sensor unit.

10.2.2 Locate the horizontal handle on the TEOM® mass transducer (shown in its upward position in Figure 3). Carefully rotate this handle upward. The TEOM® mass transducer then swings into its filter changing position (see Figure 6).

[Note: When the mass transducer is in this open position, the tapered element automatically stops vibrating to facilitate filter exchange.]

10.2.3 Using the filter exchange tool (see Figure 12), remove the filter cartridge from the mass transducer. Carefully insert the lower fork of the tool under the filter cartridge so that the fork straddle the hub of the filter cartridge. The tool's upper metal disc should be centered over the filter's surface, but not touching it. Gently lift the filter from the tip of the tapered element with a straight pull.

[Note: Never twist the filter or apply sideways force to the tapered element.]

10.2.4 Store the used filter or discard as necessary.

10.2.5 Use a Kimwipe to remove any particulate from the back side of the metal disc and the tines of the fork on the filter exchange tool. During the filter removal process, the filter may be heavily

loaded with particulate. When the tool comes in contact with the filter, the particulate often will transfer to the tool due to a small static charge. Cleaning the filter exchange tool will prevent any particulate from being transferred to a new filter and thus increase filter life.

10.2.6 Remove a clean filter cartridge from its shipping/storage box using the filter exchange tool. Grasp the clean filter as instructed in Section 10.1.2. Do not touch the filter cartridge with your fingers; only use the exchange tool.

10.2.7 Follow the procedures detailed in Sections 10.1.3 through Section 10.1.8 to insert the clean filter cartridge onto the sensor head and resort the instrument to operation mode.

11. System Operation and Data Storage

Before the instrument procedures are implemented, follow the instructions detailed below or those found in Section 4 of the TEOM® Operator's Manual. Appendices A and B of the Operator's Manual contain helpful information about the program variables and instrument screens, respectively. Each variable and parameter used by the program is represented by a 3-digit code called a Program Register Code (PRC). The monitor's entire menu structure is summarized at the beginning of Appendix B of the Operator's Manual.

11.1 Instrument Start-Up

11.1.1 Supply power to the instrument at the appropriate voltage.

11.1.2 Press the "Power" button on the front panel of the TEOM® Control Unit. A screen appears on the instrument's four-line display showing the name of the instrument. Soon thereafter, the Main Screen appears (see Figure 13).

11.1.3 Turn on the pump to draw the sample stream through the system. After turning on the instrument, the "Check Status" light appears because the flow rates and temperatures are outside of tolerance when the monitor is powered up. The status light automatically turns off after all flow rates and temperatures return to within tolerance.

11.1.4 The instrument automatically resets itself when it is turned on. As part of this initialization procedure, the monitor waits until the flow rates and temperatures remain stable (within a narrow band) for ½ h before starting data collection, which ensures the validity of all data points computed by the system

11.1.5 Press < ↑ > and < ↓ > to move the cursor (" > ") up and down through the four-line display. The informational lines of the display scroll up as the < ↓ > is pressed repeatedly.

11.1.6 If the Series 1400a monitor was received directly from R&P, the only change that needs to be made before the instrument can be used for EPA equivalent PM_{10} measurements is the input of the proper seasonal average temperature and average pressure. The instructions for doing so are found in the unit's operating manual. If the instrument has been used before and the user desires to return it to its original settings, the user should first re-initialize the unit according to Section 11.5.1 before entering the seasonal average temperature and average pressure. Once these actions are taken, no additional keystrokes are necessary for the instrument to commence its operation.

11.2 Instrument Shutdown and Shipping

11.2.1 Press the "Power" button on the front panel of the TEOM® Control Unit. The four-line display becomes blank.

11.2.2 Turn off the vacuum pump.

11.2.3 Disconnect the TEOM® Control Unit from the electric supply.

11.3 Information Shown on the Main Screen

As is the case with all screens shown by the TEOM® Series 1400a monitor, the Main Screen is divided into two sections: (1) the status line on the top of the screen and (2) the three informational lines. If the screen contains more informational lines than can be viewed at one time, pressing the < ↓ > repeatedly makes the informational lines scroll upward. The status line always remains visible. The Main Screen, which contains the most important data generated by the instrument and is the screen that is normally displayed by the monitor during operation of the unit, is shown in Figure 13.

The status line of the main screen provides an overview of important parameters such as filter loading, the instrument status condition, various types of operational settings, and the keypad protection status. The informational lines display mass concentration results in $\mu g/m^3$ for a number of averaging times, the total mass accumulation on the filter in μg, the current system temperature and flow rates, and diagnostic indicators.

11.3.1 Status Line on the Main Screen. The status line of the Main Screen provides a quick summary of the current operational condition of the instrument. The information contained in the fields of this line is summarized in Figure 13.

11.3.1.1 Status Condition. The status condition is a 1-4 number character code that summarizes the operational status of the instrument, indicating whether any exception condition exists. Whenever a status code other than "OK" is shown on the display, the instrument automatically turns on the light labelled "Check Status" on the front panel of the control unit. The status condition shown by the TEOM® Series 1400a monitor can consist of one or more codes, which are summarized in Table 1. Press <Main/Status> when the instrument is in the Main Screen to view an explanation of the current status conditions of the Status Code Screen. The <Main/Status> key toggles the instrument between the Main Screen and the Status Code Screen.

11.3.1.2 Operating Mode. The operating mode indicates the instrument's current operating setting and the type of data being computed by the monitor. An explanation of the different operating modes of the TEOM® are documented in Table 2.

11.3.1.3 Analog Output 1 Mode. The instrument normally transmits the values of three chosen variables in analog format through its three user-defined analog outputs. Analog output channel 1, however, can be defined to act in one of two different ways:

- If the "A/O 1" field of the Main Screen status line is blank, analog output 1 operates in its usual fashion; or
- If a "+" appears in the A/O a field, analog output 1 is also used as status watch indicator. When defined this way, analog output 1 transmits a full-scale signal (for example, 5 VDC if the channel is configured for 0-5 VDC operation) if a status condition exists in the temperatures, flow(s) or

oscillation of the mass transducer. If no such status condition exists, analog output channel 1 operates in its usual fashion.

Press <F5> to toggle the "+" in the A/O 1 field

11.3.1.4 Filter Loading. The value for filter loading indicates the fraction of the TEOM® filter cartridge's total capacity that has been used. Since this value is determined by the pressure drop of the main (sample) flow line, the instrument shows a non-zero value even if no filter is mounted in the mass transducer. New filters generally exhibit figures of 15-30%.

11.3.1.4.1 TEOM® filter cartridges must be exchanged before this figure reaches 100% to ensure the validity of the data generated by the instrument. At some point above 100%, the main flow drops below its set point.

11.3.1.4.2 If the filter loading percentage is high when a new TEOM® filter is placed on the mass transducer, or if the lifetime of TEOM® filter cartridges becomes noticeably shorter, this usually indicates the in-line filter in the main flow line probably needs to be exchanged.

11.3.1.5 RS-232 Mode. The RS-232 mode defines the current usage of the 9-pin RS-232 connectors on the front and back panels of the TEOM® Control Unit. The selection of the current RS-232 mode is made in the Set RS-232 Mode Screen (Section XXXXX). Alternatively, the instrument can be toggled between the None Mode (N) and Print On Line Mode (P) by pressing <F2>.

11.3.1.5.1 Use the supplies 9-to-9 pin RS-232 cable when connecting the instrument to an IBM AT-compatible computer with a 9-pin RS-232 connector. If the computer has a 25-pin RS-232 connector, use the 9-to-9 pin RS-232 cable in combination with the 2-to-25 pin Computer Adapter.

11.3.1.5.2 The 9-to-25 pin Serial Cable is designed to connect the Series 1400a monitor to a serial printer.

[Note: Never connect two serial devices to the RS-232 ports of the instrument at once, which may cause the RS-232 features of the monitor to malfunction.]

11.3.1.6 Protection. The Series 1400a monitor incorporates three states of password protection. The user has access to all capabilities of the instrument when it is unlocked (U). In the low-lock setting (L), the user is prevented from editing any of the system parameters, but may view all screens and change the operating mode of the instrument to perform such functions as filter exchange. When the monitor is in its high lock mode (H), the user cannot make any changes from the keypad, including scrolling, except for turning off the high-lock mode with the proper password.

11.3.1.7 Time. Time is displayed on the instrument in 24-h format.

11.3.2 Informational Lines on the Main Screen. The informational lines of the Main Screen show the current values of important system variables. Additional lines of information can be viewed by scrolling this display up and down. Press <↑> to move the cursor upward and <↓> to move it downward. Because the Main Screen displays data computed by the instrument, none of these values can be edited by the user. An explanation of the data that can be viewed on the display is illustrated in Figure 13.

11.4 When to Exchange TEOM® Filter Cartridges

TEOM® filter cartridges must be exchanged before the figure for filter loading on the status line of the Main Screen reaches 100%. The "Check Status" light turns on and status code F is shown on the status line of the Main Screen when the filter loading percentage is greater then 90%.

11.5 Summary of Instrument Operation

The monitor is always in operating mode 1 when it is turned on. In this mode, the instrument waits until temperatures and flows have equilibrated before successively entering modes 2, 3, and 4. The unit normally resides in operating mode 4 and is fully operation in this setting. The location of the operating mode on the instrument's Main Screen is documented in Figure 13.

11.5.1 The instrument all operates in modes S and X. Switching the monitor to either of these modes causes data collection to stop.

11.5.2 When in the Setup Mode (S), the user may change all of the possible system parameters. During instrument operation, on the other hand, the user is restricted to changing the values of only certain system variables.

11.5.3 Press <Data Stop> from any of the data collection modes (1, 2, 3, or 4) or when in the Stop All Mode (X) to enter the Setup Mode. The instrument automatically re-enters operating mode 1 if no keystrokes are entered on the keypad for 5 min when the monitor is in the Setup Mode. Otherwise, press <F1> or <Run> to re-enter operating mode 1.

[Note: The instrument enters the Stop All Mode (X) after the <Stop All> key is pressed. The Stop All Mode is meant to be an emergency mode. When the instrument resides in this mode, the flow and output to the temperature control circuits ate turned off.]

11.5.4 Press <F1> or <Run> to reset the instrument from any operating mode. This action causes the instrument to enter operating mode 1.

11.5.5 Reinitialize the Instrument. The instrument operating parameters shown in this manual are the initial settings for the monitor. Reinitialization resets the instrument to its original configuration.

11.5.5.1 If the Main Screen is not displayed on the instrument, press <Main/Status> to return the monitor to the Main Screen.

11.5.5.2 Press <Data Stop> to enter the Setup Mode.

11.5.5.3 Press <Shift><Stop All> to reset the system variables to their original values.

11.5.5.4 Enter the appropriate average temperature and pressure for the sampling location.

[Note: The listing of Program Register Codes (PRC's) in Appendix A and the listing of screens in Appendix B in the Operator's Manual both contain a column entitle "Re-Init." These columns contain the new settings of each program variable after the above re-initialization routine is executed.]

12. System Calibration

This Section describes the calibration procedures for the TEOM® PM_{10} Monitor and the method for auditing flow rates and mass.

12.1 Overview of Calibration Procedures

The routine calibration procedures recommended for the instrument are as follows: flow controller calibration (software) is recommended every 6 mo, analog calibration every 1-2 yr, flow controller calibration (hardware) every yr, and mass calibration verification every 2 yr.

[Note: These calibration intervals provided are guidelines. Requirements for routine calibration are site-specific and may be defined better by the user as necessary.]

12.2 Flow Controller Calibration (Software)

12.2.1 Turn off the TEOM® Control Unit.

12.2.2 Disconnect the electric cable that links the control unit with the sensor unit.

12.2.3 Remove the Mounting Bracket with the in-line filters and flow lines from the back panel of the TEOM® Control Unit.

12.2.4 Turn on the TEOM® Control Unit and make sure that the pump is on.

12.2.5 Display the Set Temps/Flows Screen on the instrument by selecting "Set Temps/Flows" from the Menu Screen, or by typing 12<Enter>. Press <f> and <i> to position the screen so that "F-Main" and "F-Aux" appear. Record the set points for the main and auxiliary flows.

12.2.6 Press <f> and <j> to position the cursor so that the lines entitled "T-A/S" and "P-A/S" appear on the screen. Note the existing settings for Average Temperature (on the left) and Average Pressure (on the left). If the monitor is not in the Setup Mode, press <Data Stop>. Then set the Average Temperature and Average pressure to the current local conditions at the flow meter.

12.2.7 Press <f> and <j> to position the cursor so that the lines entitled "FAdj Main" and "FAdj Aux" appear on the screen.

12.2.8 Attach a reference flow meter (such as a bubble meter, dry gas meter, or mass flow meter) to the location labelled "Sensor Flow" on the back panel of the TEOM® Control Unit. This reference flow meter should have been recently calibrated to a primary standard and should have an accuracy of 1% at 3 L/min.

12.2.9 Compare the TEOM® Series 1400a set point recorded in step 5 above with the flow rate indicated by the flow meter. This set point indication is in volumetric L/min. If a mass flow meter is being used, its reading must be adjusted for temperature and pressure to obtain volumetric flow under the test conditions. No adjustment is necessary in the case of a volumetric flow meter.

12.2.10 If necessary, edit the values for "FAdjMain" so that the volumetric flow rates indicated by the flow meter match the set point recorded in step 5 above. The value for "FAdjMain" can be incremented and decremented easily by pressing <f> and <j> keys during editing.

12.2.11 If a step adjustment greater than $\pm 5\%$ is necessary to calibrate the mass flow controller, a hardware calibration must be performed as documented in the Operator's Manual.

12.2.12 If your system has an auxiliary flow controller, repeat Sections 12.2.8 to 12.2.11 above, replacing the references to the Main Flow with Auxiliary (Bypass) Flow. Connect the flow meter to the port labelled "By-pass Flow" on the rear panel of the TEOM® Control Unit.

12.2.13 Change the values for Average Temperature and Average Pressure to their original values recorded in Section 12.2.6 (the seasonal average temperature and barometric values).

12.2.14 Turn off the TEOM® Control Unit.

12.2.15 Reattach the air lines and Mounting Bracket to the back panel of the TEOM® Control Unit.

12.2.16 Reconnect the electric cable that links the control unit with the sensor unit.

12.2.17 Turn on the TEOM® Control Unit.

12.3 Procedures for Analog Calibration

[Note: The following equipment is required to calibrate the instrument's analog input and output sections.

- *Calibrated 3 ½ digit multimeter*
- *30 cm Jumper wire (12").]*

12.3.1 Turn off the TEOM® Control Unit.

12.3.2 Remove the external cables from the Sensor and Auxiliary connectors on the back of the control unit.

12.3.3 Remove the bottom cover of the control unit.

12.3.4 Detach the ribbon cables connected to P2, P3 and P4 on the L-shaped analog Input/output board.

12.3.5 Note which channels are set for 0-2 VDC and 0-10 VDC (check jumpers W40-W47) on the analog output section and which ones are set of ±2 VDC and ±10 VDC (check jumpers W1-W15) on the analog input section.

12.3.6 Turn on the TEOM® Control Unit.

12.3.7 Press <Data Stop> to enter the Setup Mode.

12.3.8 Bring the Analog Calibration Screen onto the four-line display by selecting "Analog Calibration" from the Menu Screen or by typing 11<Enter> when in any screen.

12.3.9 Enter "YES" on the line entitled "Calibrate" by pressing <Edit><Yes>.

12.3.10 Move the cursor to the line shown as "A/O Value."

12.3.11 Place the "+" lead of the multimeter on white analog output test point 0 and the "-" lead on a black GND (ground) test point.

[Note: The readings on the Analog Calibration Screen are in percent of full scale (% FS) for both the inputs and outputs. Therefore, to output 6.500 VDC on a 0-10 VDC output channel, enter 65.000 on the line entitled "A/O Value." For a ±2 VDC input with 1 VDC applied to the channel, 50.000 would display for the analog input channel, indicating 50% of full scale.]

[Note: The potentiometers labelled TEMP and ALL GAIN should not be adjusted. They are preset at the factory.]

12.3.12 Set the "A/O Value" at 90.000 by entering <Edit>90<Enter>. This value causes the output on all installed analog output channels to be 90% of full scale. Monitor the multimeter for the

proper readout while adjusting the appropriate GAIN ADJUSTMENT potentiometer for the analog output channel being calibrated.

12.3.13 Move the "+" lead of the meter to successive analog output channels; adjust the appropriate potentiometer if necessary. Be careful to note which channels are set for 2 VDC or 10 VDC output.

12.3.14 After the analog outputs are calibrated, set the "A/O Value" to 0.00. Then calibrate the analog input (A/D) section of the Analog Card by placing the "+" lead of the meter on the 0 test point of the analog outputs. Also, place the jumper from the 0 test point of analog outputs to the red 0 test point of the analog inputs.

12.3.15 Select analog input channel 0 on the Analog Calibration Screen by typing <Edit>0<Enter> when the cursor is on the line entitled "A/1 Chan." Enter a 90% of full scale output on the "A/O Value" line appropriate for the analog input channel being calibrated (either 90% of ±2 VDC or 90% of ±10 VDC). Monitor the meter to ensure that the proper voltage is being applied and look at the 4-line display to see what percentage of full scale the analog input is measuring. Adjust the appropriate potentiometer for the channel being calibrated to achieve the proper percentage of full scale.

12.3.16 Repeat Sections 12.3.10 through 12.3.15 for each analog input channel populated on the board. Remember to move the jumper to the new analog input channel.

12.3.17 Once the analog input calibration is complete, switch off the power to the instrument and replace all cables and connectors before restarting normal operation.

12.4 Flow Controller Calibration (Hardware)

[Note: R&P recommends that the analog calibration be performed prior to the mass flow controller (MFC) calibration. The procedure set forth in this Section specifies the use of a volumetric flow meter. If a non-volumetric flow meter (such as a mass flow meter) is used, convert the flow meter's indicated flow rate to a volumetric flow rate using the local temperature and pressure conditions at the flow meter. Follow the steps below to perform a hardware calibration of the main and auxiliary mass flow controllers in the TEOM® Control Unit. If the MFC's in the TEOM® Control Unit cannot be properly adjusted using the procedure below, refer to the Tylan FC-280 MFC Manual for more detailed troubleshooting, adjustment and repair techniques.]

12.4.1 Turn off the TEOM® Control Unit.

12.4.2 Disconnect the electric cable that links the control unit with the sensor unit.

12.4.3 Remove the top cover of the TEOM® Control Unit.

12.4.4 Remove the three-lobed knob that holds the hinged MFC mounting bracket to the chassis. Swing the bracket upward so that the MFC's are more easily accessed and place a support beneath the bracket.

12.4.5 Remove the wiring connectors from the tops of the MFC's. Then remove the silver-colored circuit board covers of the MFC's. Reinstall the wiring connectors.

12.4.6 Remove the Mounting Bracket with the in-line filters and flow lines from the back panel of the TEOM® Control Unit.

12.4.7 Turn on the TEOM® Control Unit.

12.4.8 Note the settings for Average Temperature and Average Pressure shown on the Set Tempa/Flows Screen. Press <Data Stop> to place the instrument in the Setup Mode. Then set the Average Temperature and Average Pressure to the current local conditions at the flow meter.

12.4.9 Reset the adjustment factors for both MFC's by changing the settings for "FAdjMain" and "FAdjAux" on the Set Tempa/Flows Screen to 1,000.

12.4.10 Perform the remaining steps of this procedure only after the TEOM® monitor has been run for at least 1 h.

12.4.11 Connect a reference volumetric flow meter (such as a piston meter, bubble meter, or dry gas meter) that has been recently calibrated to a primary standard to the port labeled-Sensor Flow (Bypass Flow for the auxiliary flow controller). Non-volumetric flow meters such as mass flow meters may also be used but must be corrected for ambient temperature and barometric pressure to equivalent volumetric readings. This reference flow meter should have a range of 0-5 L/min with an accuracy of better than $\pm 0.5\%$. If an auxiliary flow controller is incorporated in the TEOM® system, a reference should be used.

12.4.12 If a non-volumetric flow meter is used, calculate the readings on the reference flow meter that correspond to volumetric flow rates of 2.50, 5.00, 10.00 and 20.00 L/min using local temperature and barometric pressure.

12.4.13 With the Sample Pump line closed to the vacuum source (place a hose clamp on the vacuum line to ensure zero flow), adjust the ZERO potentiometer, R3, of the MFC until a reading of 0.00 ± 0.02 L/min is shown on the Set Temps/Flows Screen. The potentiometer R3 is located on the edge of the MFC circuit board closest to the base of the MFC.

12.4.14 Set the flow set point on the Set Temps/Flows Screen to the rated full scale flow of the test MFC. With the vacuum line open, adjust the GAIN pot, R9 (the potentiometer nearest the edge card connector on the MFC circuit board), until a full-scale reading (corresponding to 4.00 L/min or 20.0 L/min as computed in Section 12.4.11) is obtained on the reference flow meter to within ± 0.02 L/min (main flow) or ± 0.1 L/min (auxiliary flow).

12.4.15 Alternately close and open the vacuum source line while repeating the adjustments of steps 13 and 14 until both zero and full-scale readings are correct.

12.4.16 Set the flow set point on the Set Temps/Flows Screen to 50% of the full scale flow of the test MFC. Adjust the LINEARITY pot, R19, until a 50% full scale reading (corresponding to 2.5 L/min or 10.0 L/min as computed in step 11) is obtained on the reference flow meter to within ± 0.02 L/min (main flow) or ± 0.1 L/min (auxiliary flow).

12.4.17 Repeat a flow check at all three flows to confirm that correct final calibration values are within limits.

12.4.18 Repeat Sections 12.4.13 through 12.4.17 for the auxiliary MFC if one is present.

12.4.19 Reset the Average Temperature and Average Pressure on the Set Temps/Flows Screen to their original values as noted in Section 12.4.7 above through the Setup Routine. Exit the Setup Routine.

12.4.20 Turn off the TEOM® Control Unit.

12.4.21 Remove the wiring connectors from the tops of the MFC's. Replace the silver covers on the appropriate flow controllers, and reinstall the connectors.

12.4.22 Swing the MFC mounting bracket into its normal position. Lock it with the knob screw.

12.4.23 Remove the reference flow meter and reconnect the Mounting Bracket and flow lines to the TEOM® Control Unit. Replace the top cover of the TEOM® Control Unit.

12.4.24 Connect the electric cable that links the control unit with the sensor unit.

12.4.25 Turn on the TEOM® Control Unit.

12.4.26 Perform a system leak test.

12.5 Mass Transducer Calibration Verification

[Note: The calibration of the TEOM® mass transducer in the TEOM® Series 1400a monitor is determined by the mass transducer's physical mechanical properties. Under normal circumstances, the calibration does not change materially over the life of the instrument.

The TEOM® Series 1400a monitor is calibrated using entire TEOM® filter cartridges as calibration weights. Since the mass of the filter cartridge with particulate differs from the mass of a new filter cartridge by only a small fraction, calibrating the system with a calibration mass equivalent to the filter mass allows all measurements to be made at essentially the same operating point as the original calibration.]

12.5.1 Using a calibrated gravimetric balance, weigh five unused TEOM® filter cartridges to the nearest 0.1 mg. Keep each filter in a suitable storage container marked with its associated weight. If desired, these preweighed filters may be kept for future use.

[Note: It is not necessary to condition the filters to a constant temperature or relative humidity before this test since the filter material is relatively hydrophobic. Filter weights vary by less than 50 µg due to moisture content, out of a total filter weight of approximately 75 mg. Since the calibration constant error is proportional to the calibration weight error, the worst case K_o error is only 0.05/75 mg or 0.06%.]

12.5.2 Confirm that the Calibration Constant shown on the Set Hardware Screen is the same as that shown on the nameplate located on the left side of the mass transducer support cage.

12.5.3 Remove the PM_{10} sampling inlet. Replace the inlet with the Flow Audit Adapter (see Figure 14) that was supplied with the instrument. Open the valve of the Flow Audit Adapter and place the R&P-provided prefilter over the valve.

12.5.4 Disconnect the Bypass Flow Line where it connects to the Flow Splitter. Plug the exit of the Flow Splitter with the 3/8" Swagelok and cap supplied with the Flow Audit Adapter Kit.

12.5.5 Warm the TEOM® system with any filter cartridge that is not a calibration filter so that all temperatures are at their normal operating conditions for at least 1 h. The air flow through the system should be at its normal value during this period. Scroll through the Main Screen by pressing <1> and <↓> until the Frequency is shown.

12.5.6 Open the mass transducer and remove the filter from the tip of the tapered element using the filter exchange procedure described earlier. Close the mass transducer and enclosure door. After the frequency has stabilized, record the frequency to within 0.001 Hz. Label this frequency FQ(1).

12.5.7 Open the mass transducer and place one of the preweighted filters on the tapered element using the filter exchange procedure earlier. Close the mass transducer and enclosure door. After the frequency has stabilized, record the frequency to within 0.001 Hz. Label this frequency F1(1).

12.5.8 Repeat Sections 12.5.6 and 12.5.7 for the remaining four filters. Use a consistent force in attaching all filters. Repeat the frequency measurement of F0 (no filter) each time to remove the effects of varying temperature from opening and closing the mass transducer.

12.5.9 For each of the 5 sets of data, calculate the K_o of the balance using the following formula:

$$K_o = (M_{filter})/[(1/f_1^2) - (1/f_o^2)]$$

where:

M_{filter} = gravimetric filter mass, g.
f_o = frequency without filter, Hz.
f_1 = frequency with filter, Hz.

12.5.10 Calculate the mean of the 5 values of K_o. Record this value.

12.5.11 Compute the standard deviation of the 5 values. Record this value both in gm-Hz and as a percentage of the mean. If the standard deviation is less than 1% of the mean, the mean value is the K_o of the instrument.

12.5.12 If the computed K_o differs by more than 2.5% from the K_o value shown on the nameplate located on the left side of the mass transducer support cage, contact R&P for further assistance. If this difference is less than 2.5%, do not change the Calibration Constant setting on the Set Hardware Screen.

12.5.13 Remove the Flow Audit Adapter and 3/8" Swagelok cap from the system and replace the PM_{10} sample inlet and Bypass Flow Line.

12.6 Flow Audit Procedure

[Note: This audit procedure for checking the flow rates in the TEOM® Series 1400a monitor is not difficult and can be done with minimal disturbance to the instrument's normal operating configuration.]

12.6.1 Reset the TEOM® Series 1400a monitor by pressing the <F1> or <Run> keys on the front panel of the control unit. Please note that any data generated by the instrument during this audit procedure are invalid. Thus, a flow audit should be combined with a filter exchange.

12.6.2 Remove the PM_{10} sample inlet. Replace the inlet with the Flow Audit Adapter (see Figure 14) that was supplied with the instrument. Turn the valve of the Flow Audit Adapter to its open position to allow for air flow.

12.6.3 Scroll the Main Screen using <f> and <j> until the Main Flow and Auxiliary Flow appear on the four-line display. These data represent the actual volumetric flows as measured by the monitor's flow controllers. Confirm that these flows are within $\pm 2\%$ of their set points (3.0 L/min for the main Flow and 16.7 L/min for the Main Flow plus Auxiliary Flow). Any greater deviation may indicate plugged in-line filters or other blockages in the system. If this is the case, correct the condition before proceeding.

12.6.4 Connect the Flow Audit Adapter to a suitable flow auditing device (such as a soap-bubble meter, dry gas meter, mass flow meter, etc.), capable of measuring 3.0 L/min and 16.7 L/min to an accuracy of $\pm 1\%$ and having a pressure drop of less than 0.07 bar (1 psi). This flow meter should have been recently calibrated to a primary standard.

12.6.5 Read the total flow (nominally 16.7 L/min) on the audit flow meter. If a nonvolumetric flow meter is being used, make any corrections necessary to translate this reading to volumetric L/min at the current ambient temperature and barometric pressure. The volumetric flow measured by the audit flow meter must be 16.7 $\pm$ 1.0 L/min to be acceptable.

12.6.6 Disconnect the Bypass Flow Line where it connects to the Flow Splitter. Plug the exist of the Flow Splitter with the 3/8" Swagelok cap supplied with the Flow Audit Adapter Kit.

12.6.7 Read the main flow (nominally 3.0 L/min) on the audit flow meter. In a nonvolumetric audit flow meter is being used, translate this reading to volumetric L/min at the current ambient temperature

and barometric pressure. The volumetric flow indicated by the audit flow meter must be 3.0 ± 0.2 L/min to be acceptable.

12.6.8 If either the Main or Auxiliary Flow is outside acceptable limits, the calibration procedures in Sections 12.2 and 12.4 must be performed.

12.6.9 Remove the cap from the exit of the Flow Splitter and replace the Bypass Flow Line.

12.6.10 To perform a system leak check, close the valve on the Flow Audit Adapter. Both the Main Flow and Auxiliary Flow should read less than 0.15 L/min on Main Screen. If one of the flows is greater than 0.15 L/min, the system is not leak tight. In this case, check hose fittings and other critical locations in the flow system for leaks.

12.6.11 Remove the Flow Audit Adaptor. Replace the PM_{10} inlet on the top of the Flow Splitter. The instrument is now back to its normal operating configuration.

12.6.12 Reset the TEOM® monitor by pressing <F1> or <Run>. The instrument will automatically begin data collection after temperatures and flow rates have remained stable at their set points for ½ h.

13. Method Safety

This procedure may involve hazardous materials, operations, and equipment. This method does not purport to address all of the safety problems associated with its use. The user must establish appropriate safety and health practices and determine the applicability of regulatory limitations prior to the implementation of this procedure. These activities should be part of the user's SOP manual.

14. Performance Criteria and Quality Assurance (QA)

Required quality assurance measures and guidance concerning performance criteria that should be activated within each laboratory are summarized and provided in the following section.

14.1 Standard Operating Procedures (SOPs)

14.1.1 SOPs should be generated by the users to describe and document the following activities in their laboratory:

- Assembly, calibration, leak check, and operation of the specific sampling system and equipment used;
- Preparation, storage, shipment, and handling of the sampler system;
- Purchase, certification, and transport of standard reference materials; and
- All aspects of data recording and processing, including lists of computer hardware and software used.

14.1.2 Specific instructions should be provided in the SOPs and should be readily available to and understood by the personnel conducting the monitoring work.

14.2 QA Program

The user should develop, implement, and maintain a quality assurance program to ensure that the sampling system is operating properly and collecting accurate data. Established calibration, operation, and maintenance procedures should be conducted regularly and should be part of the QA program. Calibration verification procedures provided in Section 13, operation procedures in Section 11, and the manufacturer's instruction manual should be followed and included in the QA program. Additional QA measures (e.g., trouble shooting) as well as further guidance in maintaining the sampling system are provided by the manufacturer. For detailed guidance in setting up a quality assurance program, the user is referred to the *Code of Federal Regulations* (see Section 15, Notation 18) and the *U. S. EPA Handbook on Quality Assurance* (see Section 15, Notation 19).

15. REFERENCES

1. Rupprecht & Patashnick Co., Inc., *TEOM® Hardware Manual (TEOMPLUS® Software Version 3)*, Albany, NY, April 1988.

2. Rupprecht & Patashnick, Co., Inc., *TEOM® Mass Monitoring Instrumentation: TEOM® Software Manual (TP3)*, Albany, NY, April 1988.

3. Patashnick, H., and G. Rupprecht, "Microweighing Goes on Line in Real Time," *Research & Development*, June 1986.

4. Patashnick, H., and G. Rupprecht, "Advances in Microweighing Technology," *American Laboratory*, July 1986.

5. Walters, S., "Clean-up in the Colliery," *Mech. Eng.*, 105:46, 1983.

6. Whitby, R., et al., "Real-Time Diesel Particulate Measurement Using a Tapered Element Oscillating Microbalance," *Soc. Automotive Eng.*, Paper 820, 463, 1982.

7. Whitby, R., R. Johnson, and R. Gibbs, "Second Generation TEOM® Filters: Diesel Particulate Mass Comparison Between TEOM® and conventional Filtration Methods," *Soc. Automotive Eng.*, Paper, 850, 403, 1985.

8. Hales, J. M., and M. P. May, "Transient Cycle Emissions Reductions at Ricardo: 1988 and Beyond," *Soc. Automotive Eng.*, Paper 860, 456, 1986.

9. Patashnick, H., and G. Rupprecht, "A New Real Time Aerosol Mass Monitoring Instrument: The TEOM®," *Proc.: Advances in Particulate Sampling and Measurement*, EPA-600/9-80-004, Daytona Beach, FL, 1979.

10. Wang, J. C. F., H. Patashnick, and G. Rupprecht, "New Real Time Isokinetic Dust Mass Monitoring System," *J. Air Pollution Control Assn.*, 30(9):1018, 1980.

11. Wang, J. C. F., et al., "Real-Time Total Mass Analysis of Particulates in the Stack of an Industrial Power Plant," *J. Air Pollution Control Assn.*, 33(12):1172, 1983.

12. Patashnick, H., G. Rupprecht, and D. W. Schuerman, "Energy Source for Comet Outbursts," *Nature*, 250(5464), July 1974.

13. Hidy, G. M., and J. R. Brock, "An Assessment of the Global Sources of Tropospheric Aerosols," *Proceedings of the Int. Clean Air Congr. 2nd*, pp. 1088-1097, 1970.

14. Hidy, G. M., and J. R. Brock, *The Dynamics of Aerocolloidal Systems*, Pergamon Press, New York, NY, 1970.

15. Lee, R. E., Jr., and S. Goranson, "A National Air Surveillance Cascade Impactor Network: Variations in Size of Airborne Particulate Matter Over Three-Year Period," *Environ. Sci. Technol.*, 10:1022, 1976.

16. Appel, B. R., E. M. Hoffer, E. L. Kothny, S. M. Wall, M. Haik, and R. M. Knights, "Diurnal and Spatial Variations of Organic Aerosol Constituents in the Los Angeles Basin," *Proceedings: Carbonaceous Particles in the Atmosphere*, March 20-22, 1978. T. Nonokov, ed., Lawrence Berkeley Laboratory, University of California, LBL-9037, pp. 84-90, 1979.

17. Nagda, N. L., H. E. Rector, and M. D. Koontz, *Guidelines for Monitoring Indoor Air Quality*, Hemisphere Publishing Corporation, New York, NY, 1987.

18. 40 CFR, Part 58, Appendix A, B.

19. *Quality Assurance Handbook for Air Pollution Measurement Systems, Volume II - Ambient Air Specific Methods (Interim Edition)*, EPA 600/R-94/038b.

TABLE 1. EXPLANATION OF STATUS CONDITION CODES

Codes	Explanation
OK	No current exception conditions
M	Control unit is not receiving a frequency signal
T	Temperature(s) outside of operational bounds
F	Flow(s) outside of operational bounds
X	Filter nearing capacity-exchange filter. This status becomes active when the filter loading reaches 90%

TABLE 2. TEOM® OPERATING MODES

Mode	Operation
1	Mass values are not currently being computed because temperatures and flow rates are stabilizing. The temperatures and flow rates must remain within a very narrow band for ½ hr before the instrument enters mode 2. The system automatically enters mode 1 when it is turned on.
2	Data collection has begun, but the first total mass value has not yet been computed
3	The first total mass value has been computed, but mass concentration and mass rate are not yet available
4	Normal operation. All mass values are being computed.
S	Set Mode. Certain operating parameters such as temperatures and flow rates can only be changed in this mode because doing so during data collection (modes 1 and 4) would adversely affect the data from the instrument. Press <Dress Stop> to enter the Setup Mode from any other operating mode. To leave the Setup Mode and start data collection press either <F1> or <Run> (monitor returns to mode 1). If the instrument remains in the Setup Mode for 5 min without any key being pressed on the keypad, the monitor automatically returns to mode 1.
X	Stop All Mode. This mode indicated that the normal operation of the instrument has been suspended, and that the monitor is "sleeping." In this mode, data collection ceases, the flow rates in the system drop to 0, and the output to the temperature circuits is turned off. This emergency state is activated by pressing <Stop All> on the instrument keypad. To leave this mode, press either <F1> or <Run> to restart data collection (modes 1 to 4), or <Data Stop> to enter the Setup Mode.

TABLE 3. EXPLANATION OF DATA NOTATION

Data notation	Explanation
30-min MC	30-min average mass concentration. This value is updated every 30 min on the half hour ($\mu g/m^3$).
1-h MC	1-h average mass concentration. This value is updated every 60 min on the hour ($\mu g/m^3$).
8-h MC	8-h average mass concentration. This value is updated every 8 h ($\mu g/m^3$)
24-h MC	24-h average mass concentration. This value is updated every 60 min on the hour ($\mu g/m^3$).
Total mass	The amount of mass that has accumulated on the TEOM® filter cartridge since the most recent instrument reset <Run> (done by turning on the instrument, or pressing <F1> or
Case temperature	Temperature of the TEOM® mass transducer (set point 50°C).
Air temperature	Temperature of the sample stream at the base of the heated air inlet (set point 50°C).
Cap temperature	Temperature of the upper part of the TEOM® mass transducer (set point 50°C).
Enclosure temperature	Temperature inside the sensor unit enclosure (set point 40°C).
Main flow	Actual volumetric flow rate through the main flow controller (set point 3 L/min), as measured by the main flow controller.
Auxiliary flow	Actual volumetric flow rate through the auxiliary flow controller (set point 13.67 L/min), as measured by the auxiliary flow controller.
Noise	Indication of how well the TOM mass transducer is performing. This figure should be less than 0.10 after the system has bene in operating mode 4 for at least ½ h.
Frequency	The oscillating frequency of the tapered tube in the TEOM® mass transducer. This figure varies from one Series 1400a monitor to another, but generally ranges between 150 and 400 Hz.

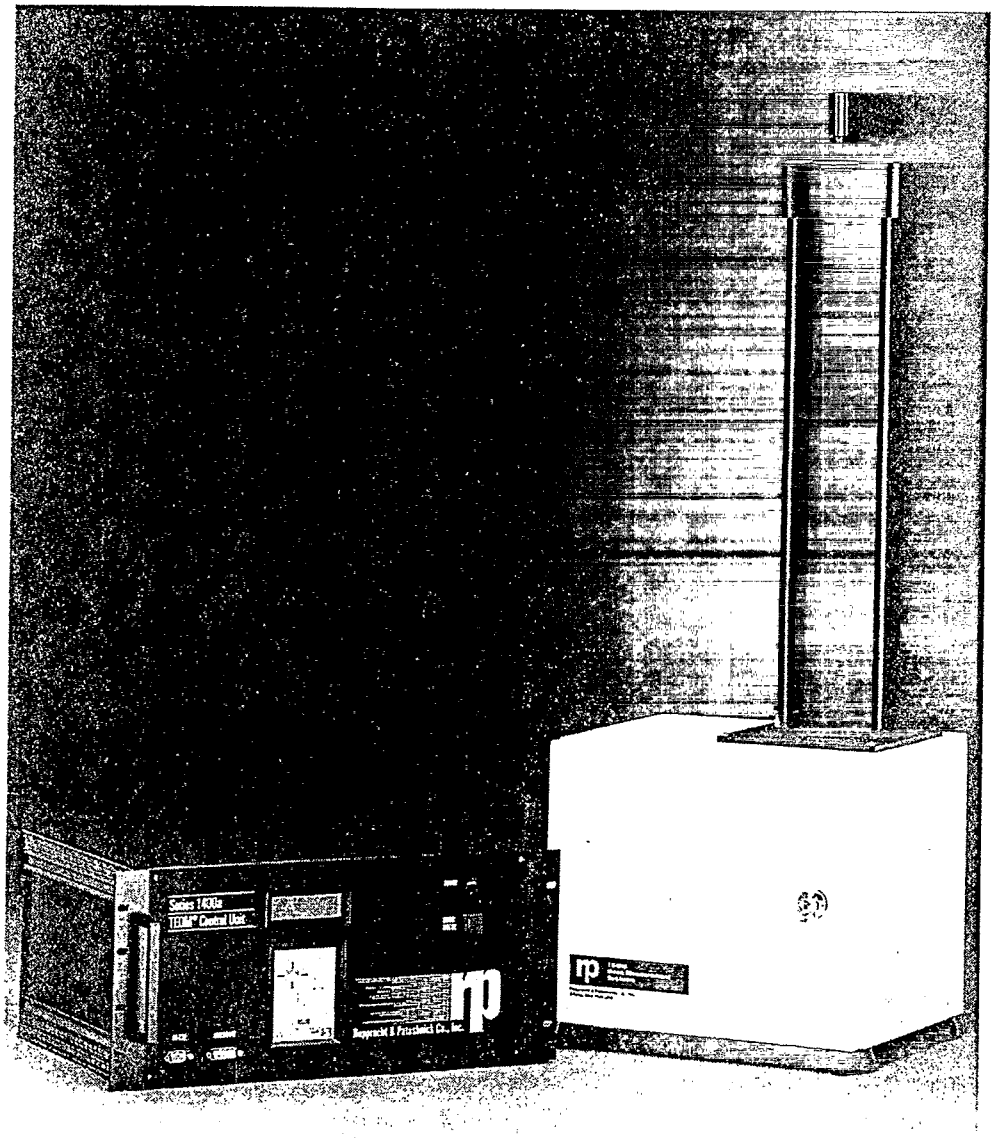

Figure 1. TEOM® control and sensor unit.

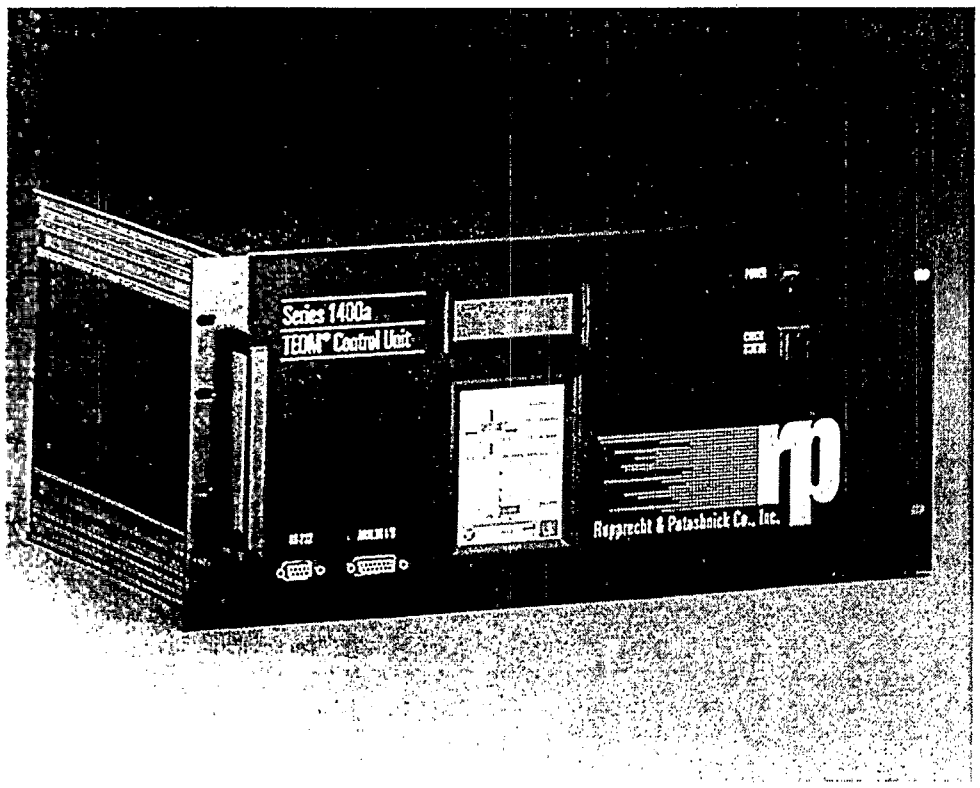

Figure 2. TEOM® control unit front panel.

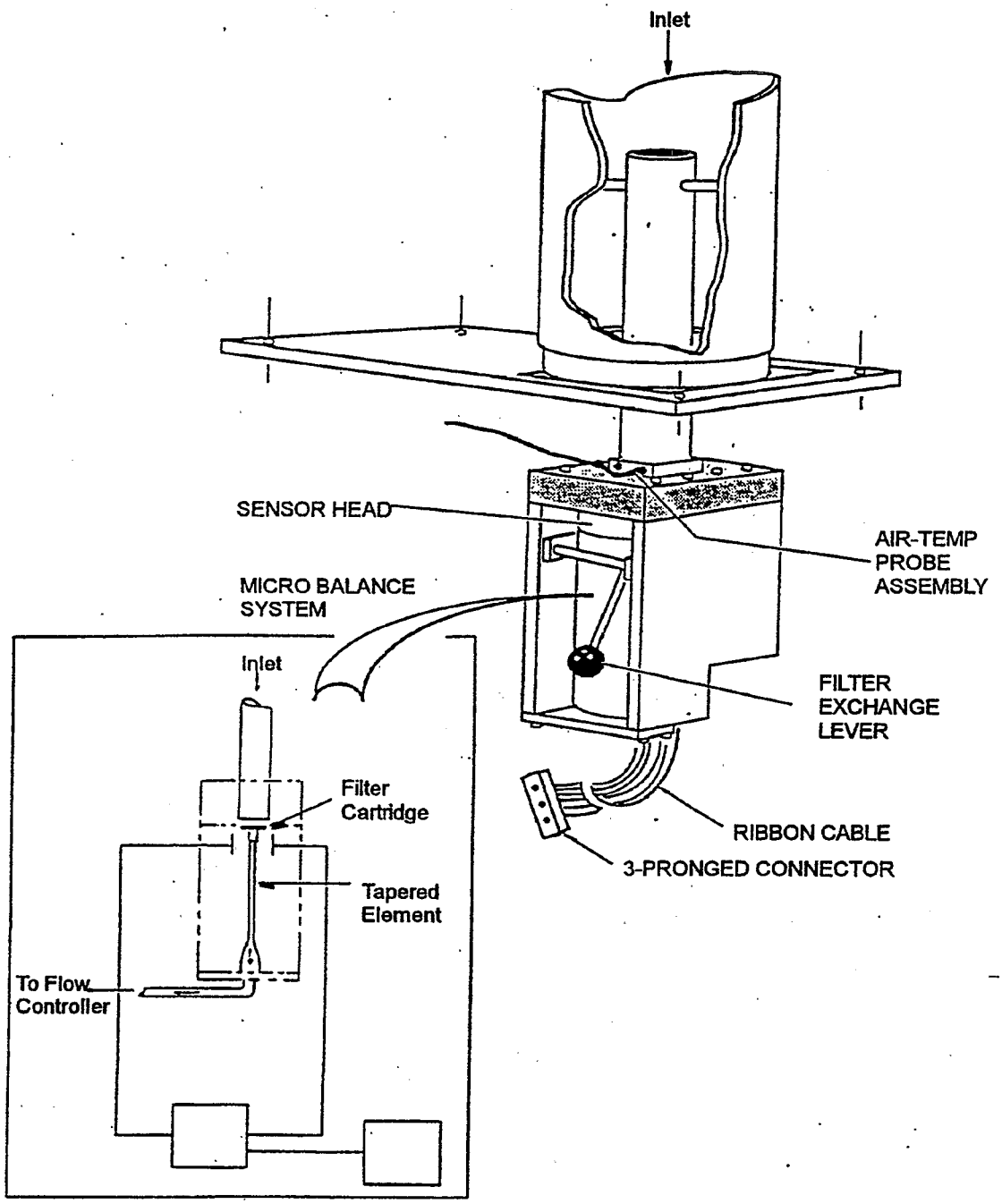

Figure 3. TEOM® sensor/preheater assembly.

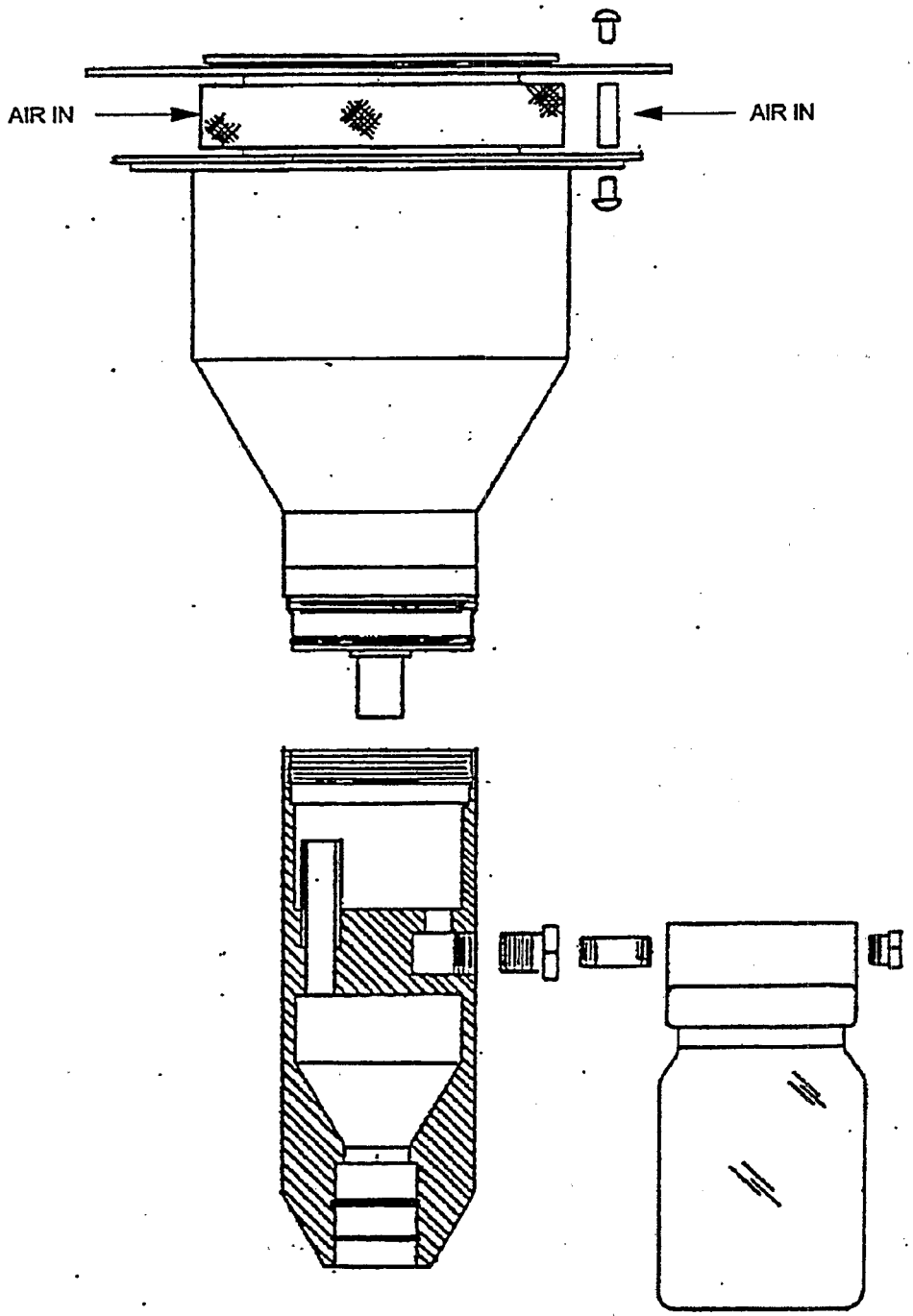

Figure 4. TEOM® PM_{10} inlet.

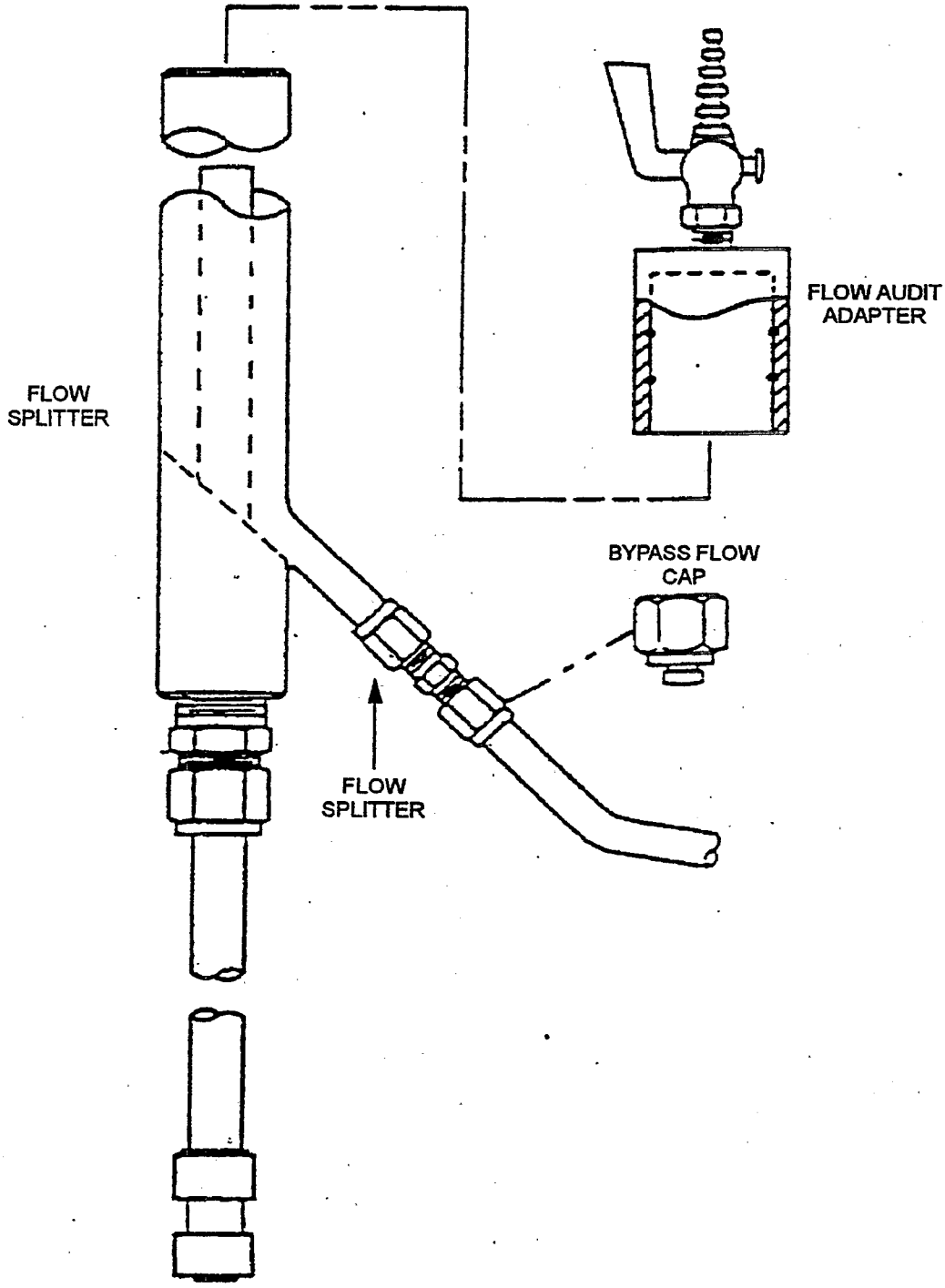

Figure 5. TEOM® flow splitter assembly.

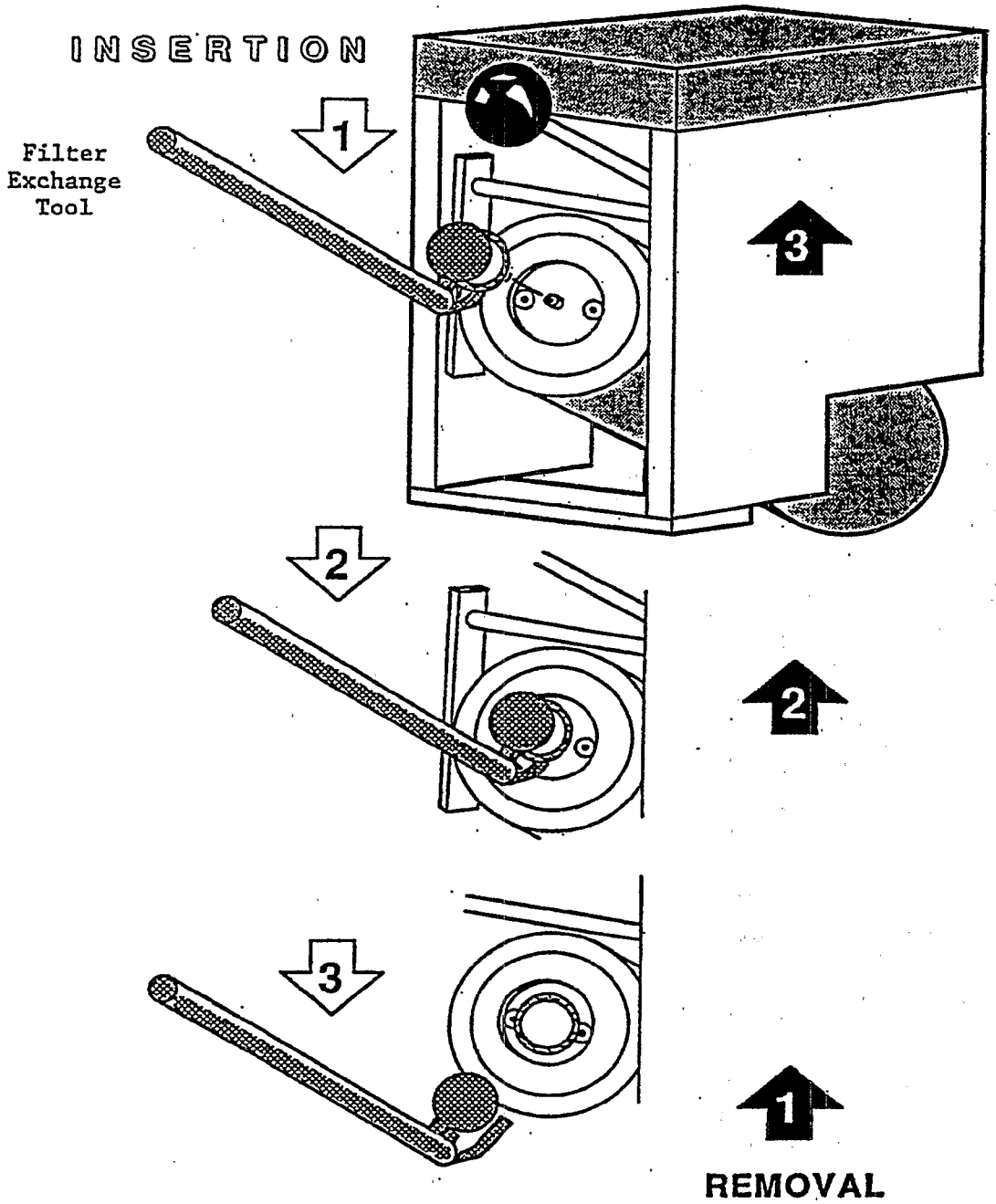

Figure 6. TEOM® filter cartridge assembly illustrating loading and removing filter.

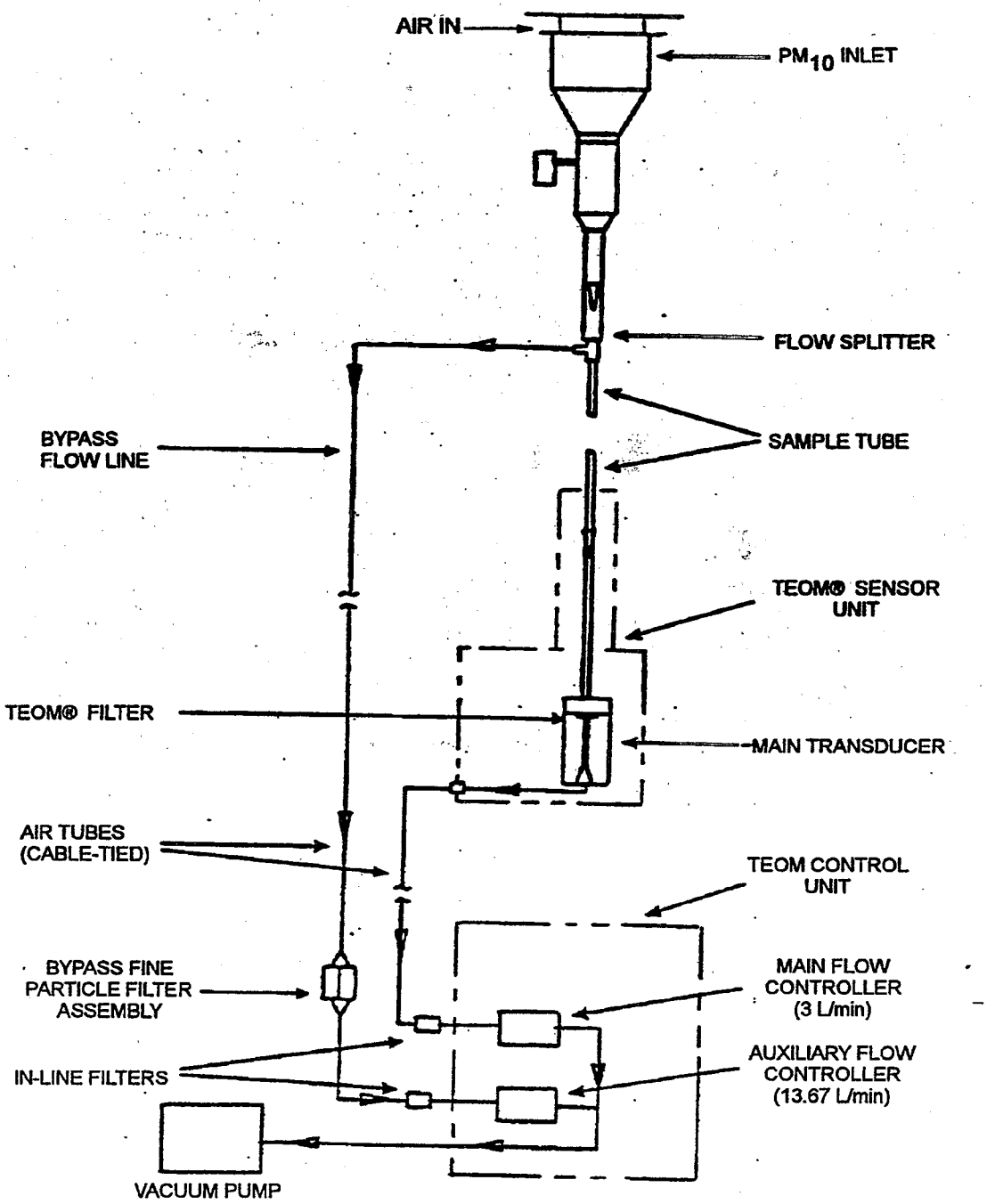

Figure 7. Schematic diagram of the assembled TEOM® monitor.

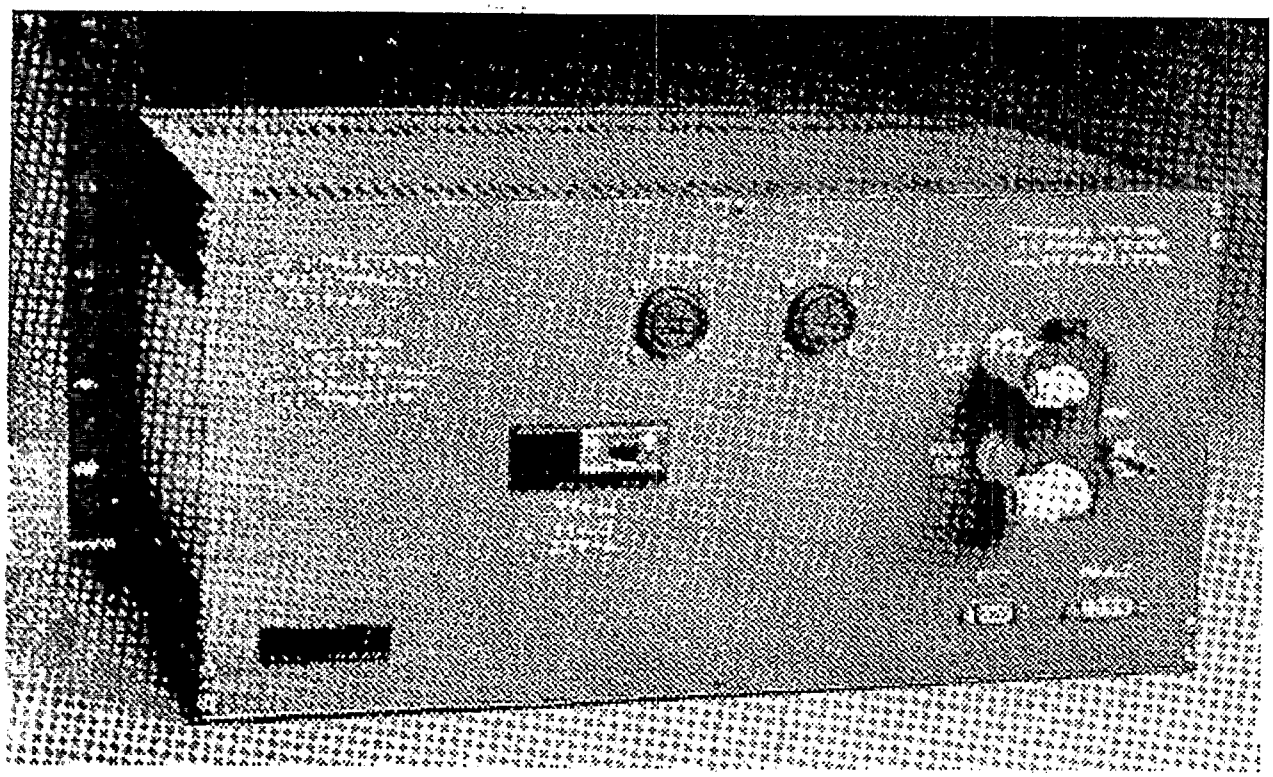

Figure 8. Back panel of TEOM® monitor.

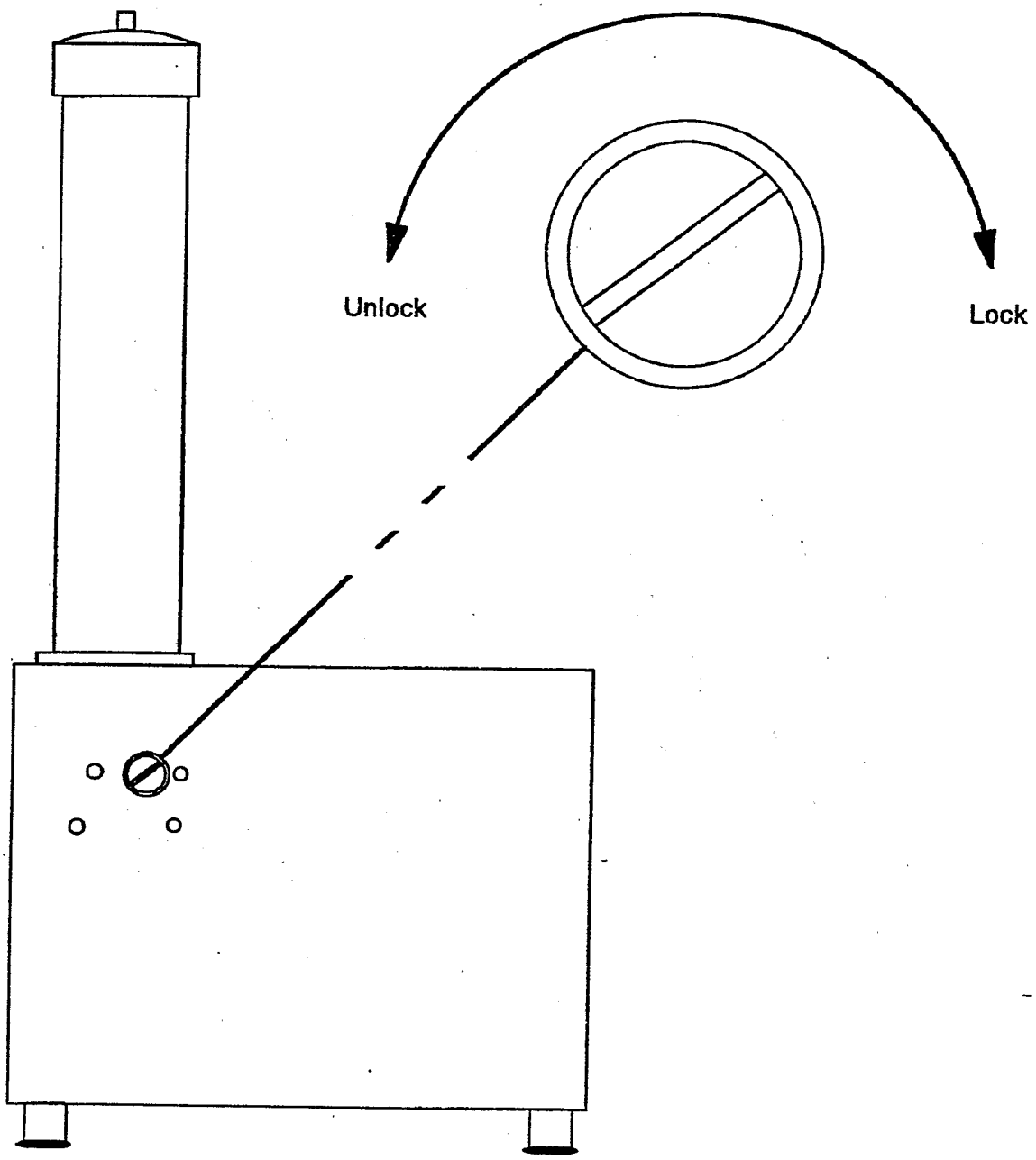

Figure 9. Location of shipping latch on back panel of the TEOM® monitor.

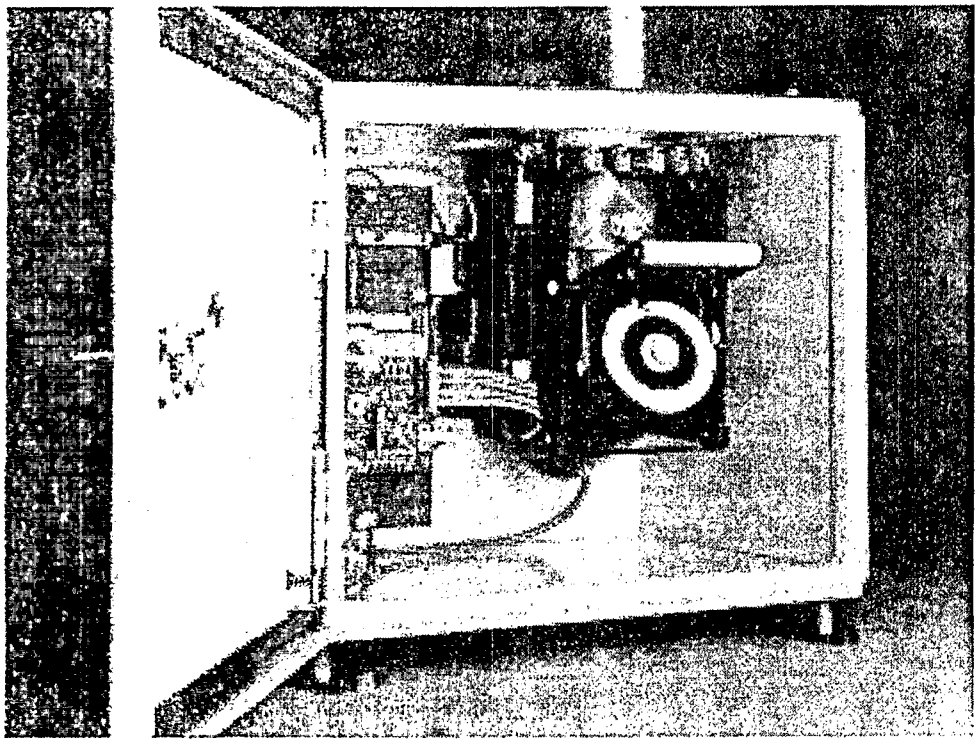

Figure 10. Inside view of TEOM® sensor unit.

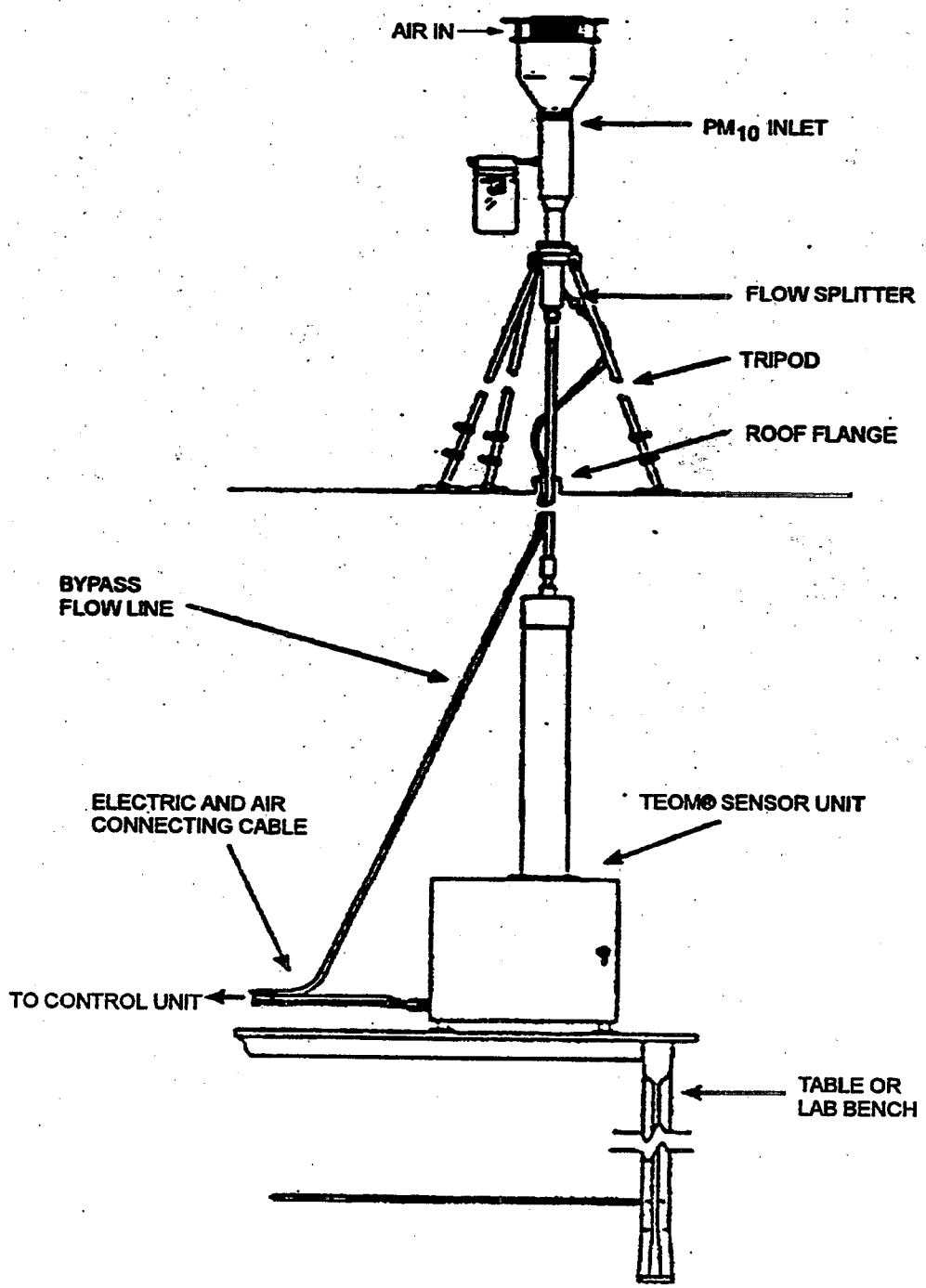

Figure 11. Schematic of typical TEOM® PM_{10} installation with flow splitter.

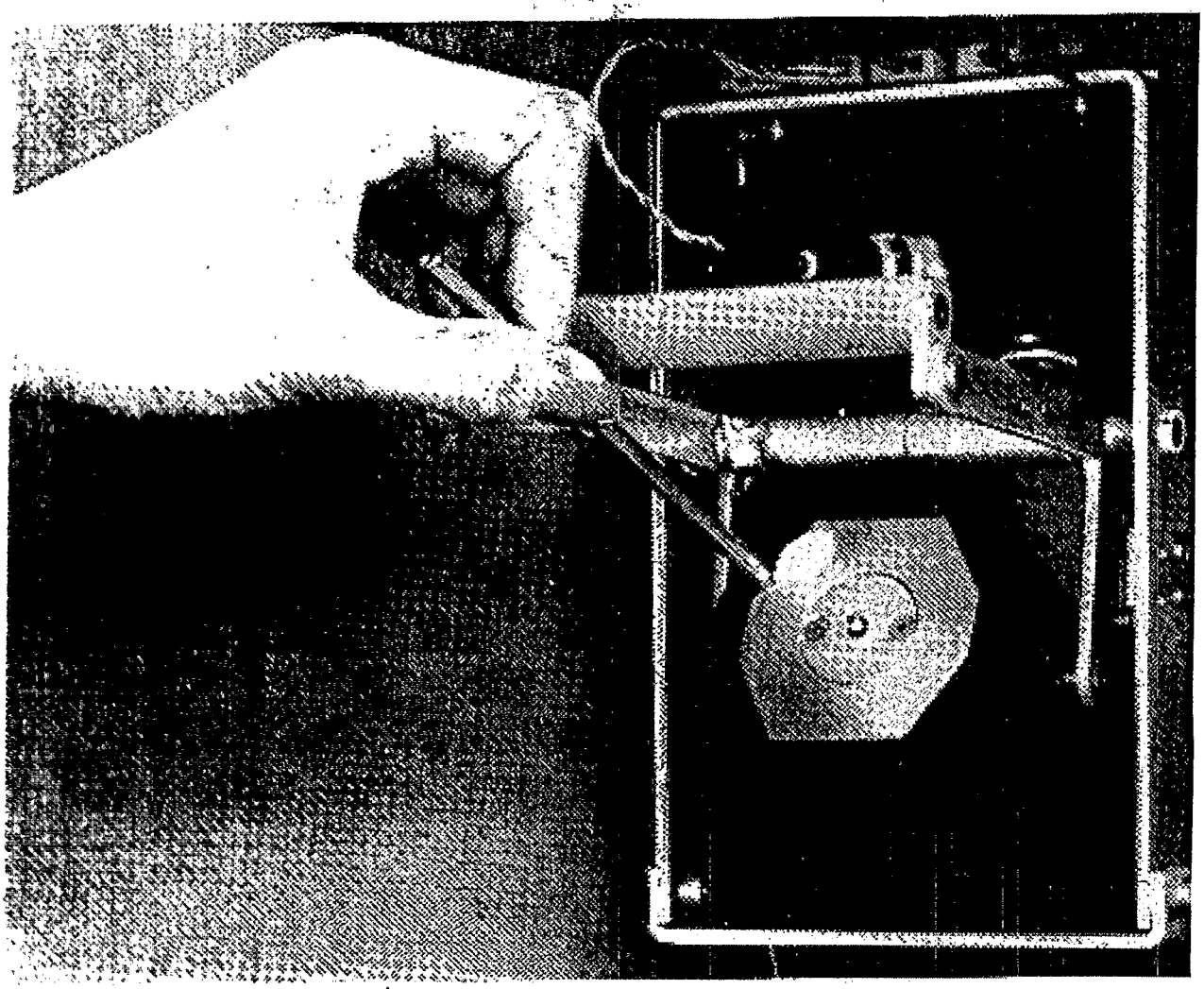

Figure 12. Replacing filter cartridge in sensor unit using filter exchange tool.

MAIN SCREEN
(Screen 00)

Screen on Instrument		Description of Screen				
		Units	Edit in Modes	Default	Re-Init	Comments
OK 4 38% NU 09:39	→	N/A	N/A	N/A	N/A	Status Line
Mass Conc> 76.4	→	$\mu g/m^3$	not editable	N/A	N/A	Short-term average
30-Min MC 72.3	→	$\mu g/m^3$	not editable	N/A	N/A	Updated every 30 min
01-Hr MC 78.4	→	$\mu g/m^3$	not editable	N/A	N/A	Updated every 1 hr
08-Hr MC 85.8	→	$\mu g/m^3$	not editable	N/A	N/A	Updated every 1 hr
24-Hr MC 69.3	→	$\mu g/m^3$	not editable	N/A	N/A	Updated every 1 hr
Tot Mass 974.38	→	μg	not editable	N/A	N/A	Mass since last reset
Case Temp 50.00	→	°C	not editable	50	50	Current temperature
Air Temp 50.01	→	°C	not editable	50	50	Current temperature
Cap Temp 49.98	→	°C	not editable	50	50	Current temperature
Encl Temp 40.00	→	°C	not editable	40	40	Current temperature
Main Flow 3.00	→	l/min	not editable	3	3	Current flow rate
Aux Flow 13.66	→	l/min	not editable	13.67	13.67	Current flow rate
----------	→	N/A	N/A	N/A	N/A	
Noise 0.034	→	μg	not editable	N/A	N/A	Diagnostic measure
Frequency 187.05738	→	hz	not editable	N/A	N/A	Mass transducer

To enter this screen press: <Main/Status> or 00 <Enter>	Next screen (using <Step Screen>): Menu Screen (Screen 02)

Figure 13. TEOM® main menu screens.

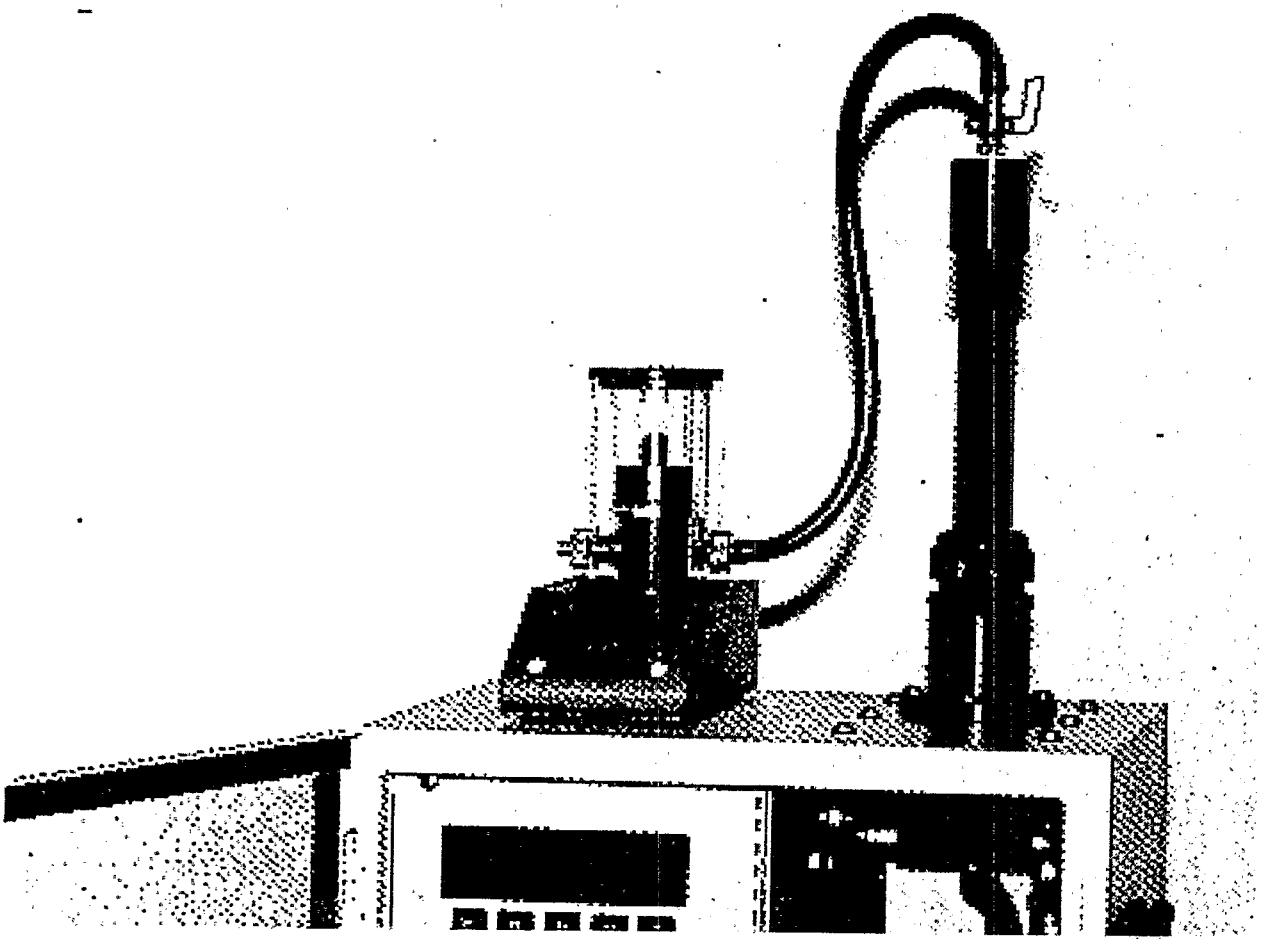

Figure 14. Auditing of the TEOM® flow control system.

EPA/625/R-96/010a

Compendium of Methods for the Determination of Inorganic Compounds in Ambient Air

Chapter IO-2

INTEGRATED SAMPLING OF SUSPENDED PARTICULATE MATTER (SPM) IN AMBIENT AIR

OVERVIEW

Center for Environmental Research Information
Office of Research and Development
U.S. Environmental Protection Agency
Cincinnati, OH 45268

January 1997

Chapter IO-2
Integrated Sampling of Suspended Particulate Matter (SPM) in Ambient Air

Overview

Under authority granted in Section 109 of the Clean Air Act (the Act) and its amendments, the U. S. Environmental Protection Agency (EPA) has promulgated primary and secondary national ambient air quality standards (NAAQS) for six criteria pollutants: SO_2, NO_x, CO, O_3, PM_{10}, and Pb. These primary (health-related) and secondary (welfare-related) pollutants standards are contained in Title 40, Part 50 of the Code of Federal Regulations(40 CFR 50). The reference methods for monitoring ambient atmospheres for these criteria pollutants are in the Appendices of 40 CFR 50, A through G.

Section 109 of the Act requires EPA to evaluate, at 5-yr intervals, the criteria for which standards have been promulgated and to issue any new standards as may be appropriate.

The issuance of reference methods designed to monitor these criteria pollutants has a legal basis in Section 301 of the Act, which states that the regulations necessary to carry out the provisions of the Act may be promulgated by the Administrator. To evaluate and ascertain the status of air quality with regard to the criteria pollutants, uniform analytical methods are used to ensure consistency and accuracy in the data generated.

Suspended particulate matter (SPM) in air generally is considered to be all airborne solid and low vapor pressure liquid particles, involving a complex, multi-phase system consisting of a spectrum of aerodynamic particle sizes ranging from below 0.01 μm to 100 μm and larger. Historically, particulate matter (PM) measurement has concentrated on total suspended particulates (TSP), with no preference to size selection. The EPA's approach toward regulating and monitoring TSP matter has evolved over time. When EPA first regulated TSP, the NAAQS was stated in terms of particulate matter captured on a filter with an aerodynamic particle size of <100 μm as defined by the TSP sampler. Recently, the primary standard for TSP was replaced with a PM_{10} standard, which includes only particles with an aerodynamic diameter of 10 μm or less.

Researchers generally recognize that these particles (<10 μm) may cause significant, adverse health effects. Recent studies involving particle transport and transformation strongly suggest that atmospheric particles commonly occur in two distinct modes: the fine (<2.5 μm) mode and the coarse (2.5-10.0 μm) mode. The fine or accumulation mode (also termed the respirable particulate matter) is attributed to growth of particles from the gas phase and subsequent agglomeration, while the coarse mode is made of mechanically abraded or ground particles. Particles that have grown from the gas phase (either because of condensation, transformation, or combustion) occur initially as very fine nuclei--0.05 μm. Thee particles tend to grow rapidly to accumulation mode particles around 0.5 μm, which are relatively stable in the air. Because of their initially gaseous origin, particle sizes in this range include inorganic ions such as sulfate, nitrate, ammonia, combustion-form carbon, organic aerosols, metals, and other combustion products. Coarse particles, on the other hand, are produced mainly by mechanical forces such as crushing and abrasion. Pollen and spores also inhabit the coarse particle range, thus providing dominance by materials of geological origin. Coarse particles, therefore, normally consist of finely divided minerals such as oxides of aluminum, silicon, iron, calcium, and potassium. Coarse particles of soil or dust mostly result from entrainment by the motion of air or from other mechanical action within their area.

Since the size of these particles is normally >2.5 μm their retention time in the air parcel is shorter than the fine particle fraction.

The EPA is considering further narrowing the primary NAAQS to even smaller particles ($\leq$2.5 μm). As shown in Figure 1, these smaller particles penetrate deeply into the lung, where the potential for health effects is greatest. Current knowledge indicates that this size fraction (<2.5 μm) is composed of varying amounts of sulfate, ammonium, and nitrate ions, elemental carbons, organic carbon compounds, water, and small amounts of soil dust, lead compounds, and trace species. This size fraction is generally man made.

Consequently, a wide variety of PM is found in a typical atmosphere which is constantly changing. Such factors as size, chemical composition, affinity for water and chemical reactivity, to name a few, determine the lifetime for the PM in the atmosphere. Generally, the lifetime of coarse particles in the atmosphere are measured in day, whereas fine particles tend to be transported over large areas. As illustrated in Figure 2, the atmosphere is characterized by a typical bimodel distribution of PM.

The sampling methods for characterizing PM in ambient air are divided into two categories: "reference" methods and "equivalent" methods. Equivalent methods were presented in Chapter IO-1. This chapter will present the reference methods and a discussion of filter media and filter holders. The reference methods are manual methods established by EPA for determining TSP and PM_{10} concentrations in ambient air. In these methods, a known volume of air is drawn through the sampler and the particulate fraction of interest (TSP or PM_{10}) is collected. The mass of particulate matter subsequently is determined gravimetrically, and the average ambient concentration over the sampling period is calculated.

The reference method for TSP is codified at 40 CFR 50, Appendix B. This method uses a high-volume sampler (hi-vol) to collect particles with aerodynamic diameters of approximately 100 μm or less. The hi-vol samples 40-60 cubic feet per minute (ft^3/min) of air with the sampling rate held constant over the sampling period. The hi-vol's design causes the TSP to be deposited uniformly across the surface of the filter. The TSP hi-vol can be used to determine the average ambient TSP concentration over the sampling period, and the collected material can be analyzed subsequently to determine the identity and quantity of inorganic metals present in the TSP.

The federal reference method for PM_{10} measurements is based on particulate selection by inertial separation followed by filtration and gravimetric determination of the PM_{10} mass on the filter substrate. The reference method for PM_{10} is codified in 40 CFR 50, Appendix J. The standard for this method specifies the features for a reference PM_{10} measurement method. These features are summarized as follows:

- The sampling inlet has a cut-point of 10 $\pm$ 0.5 μm aerodynamic diameter, as determined in a wind tunnel using liquid particles of specified diameter at specific wind speeds.
- Flow-rate remains stable over a 24-h period, independent of filter loading, within $\pm$5% of the initial average flow reading and within $\pm$10% of the initial flow rate for instantaneous flow measurements.
- Measurement precision for a 24-h period should be within $\pm$5 $\mu g/m^3$ for concentrations less than 80 $\mu g/m^3$ or $\pm$7 $\mu g/m^3$ of measured PM_{10} for concentrations greater than 80 $\mu g/m^3$.

- For a nominal air volume sampled over a 24-h period, the filter media should collect more than 99% of a 0.3 μm particles and have an alkalinity of <25 microequivalents per gram and a net equivalent weight gain or loss of not more than 5 $\mu g/m^3$.
- Prior to weighing, the filter should be equilibrated at a constant temperature (±3%) between 15° and 30°C and constant relative humidity (±5%) between 20 and 45%.

Two technologies have qualified as meeting the sampling requirements of the reference method: a hi-vol with a PM_{10} inlet and a dichotomous sampler. The PM_{10} hi-vol is identical to the TSP hi-vol except that it is equipped with an inlet that directs only PM_{10} to the filter. Dichotomous samplers also collect only PM_{10}, which is split into fractions above and below 2.5 μm. Both samplers collect the particulate matter uniformly across the surface of the filters. Both can be used to determine average ambient PM_{10} concentration over the sampling period, and the collected material from both can subsequently be analyzed for inorganic metals and other materials present in the collected sample. The dichotomous sampler has the advantage of collecting two fractions so that information can be obtained about total PM_{10} and/or both of the two fractions. This property may take on added importance if EPA decides to revise the primary NAAQS to address smaller particles. In addition, the dichotomous sampler operates at a low flow rate (about 0.6 ft^3/min), which allows the use of filter media that would otherwise quickly clog at hi-vol flow rates. However, because of its higher flow rates, the PM_{10} hi-vol collects more material so lower ambient concentrations of inorganic materials can be detected (assuming identical filter medium and analysis technique).

The relationship between sampler type and the type of particulate matter sampled is as follows:

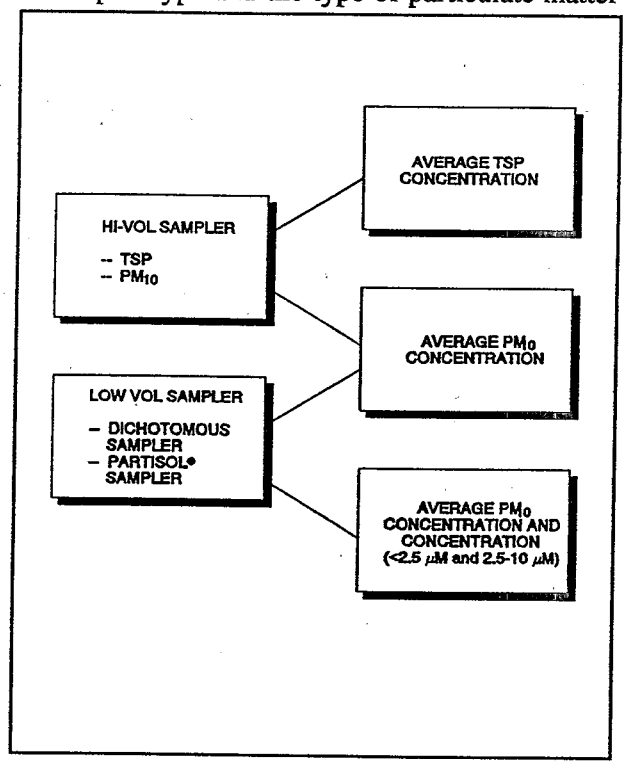

The major prerequisite in selecting a sampling system is to determine what size range of particles are to be monitored and the method of analysis (if applicable). The analytical method selection is very important, because test will dictate the type of filter media compatible with the sampling system. Several air sampling filter types are available, and the specific filter used depends upon the desired physical and chemical characteristics of the filter and the analytical methods used. No single filter medium is appropriate for all desired analyses. Particle sampling filters consist of a tightly woven fiber mat or plastic membrane penetrated by microscopic pores. Several characteristics are important in selecting a filter media; these characteristics include:

- Particle sampling efficiency;
- Mechanical stability;
- Chemical stability;
- Temperature stability;
- Blank concentrations;
- Flow resistance and loading capacity; and
- Cost and availability.

A comparison of several air sampling filter types with their chemical and physical characteristics and the corresponding chemical analytical methods that can be used for analyzing the sample is presented in Table 1.

Filter holders are also constructed from different types of material, and the material type must be taken into account if reactive components of suspended particles are collected. Filter holders are constructed in either an in-line or open-face configuration. In-line holders have a small diameter opening into a small chamber that contains the filter media. This holder type may concentrate the particles in the center of the filter media, which could lead to a bias in the results if the analyses are not performed on the entire filter. Open-face holders have exposed filters with no constrictions upstream of the filter media and are a better option for ambient aerosol sampling systems. The exposed filters must be protected from excessive vibration that might dislodge the particles on the filter surface. A brief listing of common filter holders, sizes, and physical characteristics is presented in Table 2. A more detailed discussion of filter media, holders, and the determination of mass concentration is provided in Method IO-2.4.

Unfortunately, no one sampling method or filter media can address all data quality objectives for a particular ambient air monitoring program. Each method and filter type has its own attributes, specificities, advantages, and disadvantages, as previously discussed. However, Compendium Method IO-2 attempts to encompass into one chapter the various options, in a step-by-step methodology, to facilitate accurate and reliable data for sampling SPM and in the ambient air.

TABLE 1. REPRESENTATIVE FILTER MEDIA FOR PARTICLE SAMPLING[1]

Filter type	Filter sizes, mm	Characteristics		Analysis methods
		Chemical	Physical	
Ringed Teflon® membrane	25 37 47	• Low blank levels • Low blank weight • No carbon analysis • Low hygroscopic tendency • Inert to gas adsorption	• Thin membrane • White, nearly transparent surface • High particle collection efficiency • High flow resistance • Melts at ~60°C • Cannot be accurately sectioned • Multiple pore sizes available • Minimal diffusion of transmitted light	• GRAV, XRF, OA, PIXE, INAA, AAS, ICP/AES, ICP/MS, IC, AC
Teflon® membrane--polypropylene backed	47	• Low blank levels • No carbon analysis • High blank weight • Inert to gas adsorption • High background levels for PIXE and XRF • Low hygroscopic tendency	• Thin membrane • White opaque surface • High particle collection efficiency • Melts at ~60°C • High flow resistance • Diffuses transmitted light	• GRAV., PIXE, XRF, INAA, AAS, ICP/AES, ICP/MS, IC, AC
Nylon membrane	25 37 47	• Low blank weight • Low hygroscopic tendency • High HNO_3 collection efficiency • Passive adsorption of low levels of NO, NO_2, PAN, and SO_2	• Thin pure nylon membrane • Diffuses transmitted light • High flow resistance • Melts at ~60°C • 1 μm pore size	• IC, AC
Silver membrane	25 37	• Resistant to chemical attack • Passive adsorption of organic vapors • High blank weight • Low hygroscopic tendency	• Thin membrane • Gray-white surface • Diffuses transmitted light • High flow resistance • Melts at ~350°C	• GRAV., XRD
Cellulose esters membrane (cellulose nitrate mixed esters and cellulose acetate)	37 47	• Dissolved by several organic solvents • Negligible ash content • Highly hygroscopic • Low blank weight	• Thin membrane • White opaque surface • Multiple pore sizes available • Surface diffuses transmitted light • High flow resistance • Melts at ~70°C	• GRAV., OM, TEM, SEM, XRD • Biomed. appl.

Filter type	Filter sizes, mm	Characteristics		Analysis methods
		Chemical	Physical	
Polycarbonate membrane	47	• No carbon analysis • Low blank levels • Low blank weight • Low hygroscopic tendency	• Smooth, thin surface with straight capillary holes • Light gray, nearly transparent surface • Minimal diffusion of transmitted light • Multiple pore sizes available • Use for particle size classification • Low particle collection efficiency for some pore sizes • Retains static charge • Moderate flow resistance • Melts at ~60°C	• GRAV., OA, OM, SEM, XRF, PIXE
Pure quartz filter	25 37 47 203 x 254	• Contains large and variable quantities of Al and Si • Low blank level for ions • Passive adsorption of organic vapors • Little adsorption of HNO_3, NO_2, and SO_2 • Low hygroscopic tendency	• White opaque surface • Diffuses transmitted light • Edges of filter flake in holders • High particle collection efficiency • Moderate flow resistance • Melts at >900°C	• ICP/AES, ICP/MS, IC, AC, OA, T, TOR, TMO, TOT
Mixed quart fiber (quartz filters with ~5% borosilicate content)	203 x 254	• Contains large and variable quantities of Na, Al, and Si plus variable levels of other metals • Passive adsorption of organic vapors • Little adsorption of HNO_3, NO_2, and SO_2 • High blank weight • Low hygroscopic tendency	• White opaque surface • Diffuses transmitted light • High particle collection efficiency • Low flow resistance • Becomes brittle on heating • Can melt at ~500°C	• GRAV., XRF, PIXE, AA, ICP/AES, ICP/MS, IC, AC, T, TOR, TMO, TOT
Teflon®-coated glass fiber (borosilicate glass fiber mat with surface layer of Teflon®)	37 47	• Inert to adsorption of HNO_3, NO_2, and SO_2 • Low blank level for ions • High blank weight • Low hygroscopic tendency	• Low flow resistance • High particle collection efficiency • Melts at ~60°C; glass at ~500°C	• GRAV., IC, AC

Filter type	Filter sizes, mm	Characteristics		Analysis methods
		Chemical	Physical	
Glass fiber (borosilicate glass fiber)	203 x 254	• Adsorbs HNO_3, NO_2, SO_2, and organic vapors • High blank levels • High blank weight • Low hygroscopic tendency	• White opaque surface • Diffuses transmitted light • Low flow resistance • High particle collection efficiency • Melts at ~500°C	• GRAV., OA, XRF, PIXE, INAA, AAS, ICP/AES, IC, AC
Cellulose fiber ("paper" filter)	25 37 47	• No carbon analysis • Low blank levels; high purity • Most useful for adsorption of gases, e.g., HNO_3, SO_2, NH_3, and NO_2 after impregnated with reactive chemicals • High blank weight • Highly hygroscopic • Adsorbs gases, particularly water vapor	• White opaque surface • Diffuses transmitted light • High mechanical strength • Low particle collection efficiency possible • Variable flow resistance • Burns at ~150°C	• GRAV., XRF, PIXE, INAA, AAS, ICP/AES, ICP/MS, IC, AC

Analysis Methods Abbreviations (alphabetical order)

AAS = Atomic absorption spectrophotometry
AC = Automated colorimetry
GRAV = Gravimetry
IC = Ion chromatography
ICP/AES = Inductively-coupled plasma with atomic emission spectrophotometry
ICP/MS = Inductively-coupled plasma with mass spectrophotometry
INAA = Instrumental neutron activation analysis
OA = Optical absorption or light transmission (b_{abs})
OM = Optical microscopy
PIXE = Proton-induced X-Ray emissions
SEM = Scanning electron microscopy
T = Thermal carbon analysis
TEM = Transmission electron microscopy
TMO = Thermal manganese oxidation carbon analysis
TOR = Thermal/optical reflectance carbon analysis
TOT = Thermal/optical transmission carbon analysis
XRD = X-Ray diffusion
XRF = X-ray fluorescence

Source: Chow, J. C., "Measurement Methods to Determine Compliance with Ambient Air Quality Standards for Suspended Particles," *J. Air and Waste Manage. Assoc.*, Vol. 45:320-382, 1995.

TABLE 2. REPRESENTATIVE FILTER HOLDERS

Holder type	Filter size, mm	Physical characteristics
Polycarbonate	25 47	• In-line or open-face configuration • Base has flow resistant outlet • Support grid has polyethylene O-ring • Extender section for multi-stage filter pack sampling
Polypropylene	13 25 37 47	• In-line or open-face (37 mm only) configuration • Polypropylene or glass-filled polystyrene base • Support grid has silicon O-ring • 37 mm filter has polypropylene base
Aluminum or stainless steel	25 47	• In-line or open-face • Stainless steel screen with Viton O-ring • Has nylon or polyethylene adapters
Stainless steel	25 47 203 x 254	• In-line or open-face • Stainless steel base • Stainless steel or nickel-plated screen • Screens use Teflon® or Viton O-rings
Perfluoroalkoxy (PFA) Teflon®	47	• In-line or open-face • Base, support grid, and adapter are PFA Teflon® • Support grid has Viton O-ring
Teflon®	47	• In-line • Teflon® base

Source: Chow, J. C., "Measurement Methods to Determine Compliance with Ambient Air Quality Standards for Suspended Particles," *J. Air and Waste Manage. Assoc.*, Vol. 45:320-382, 1995.

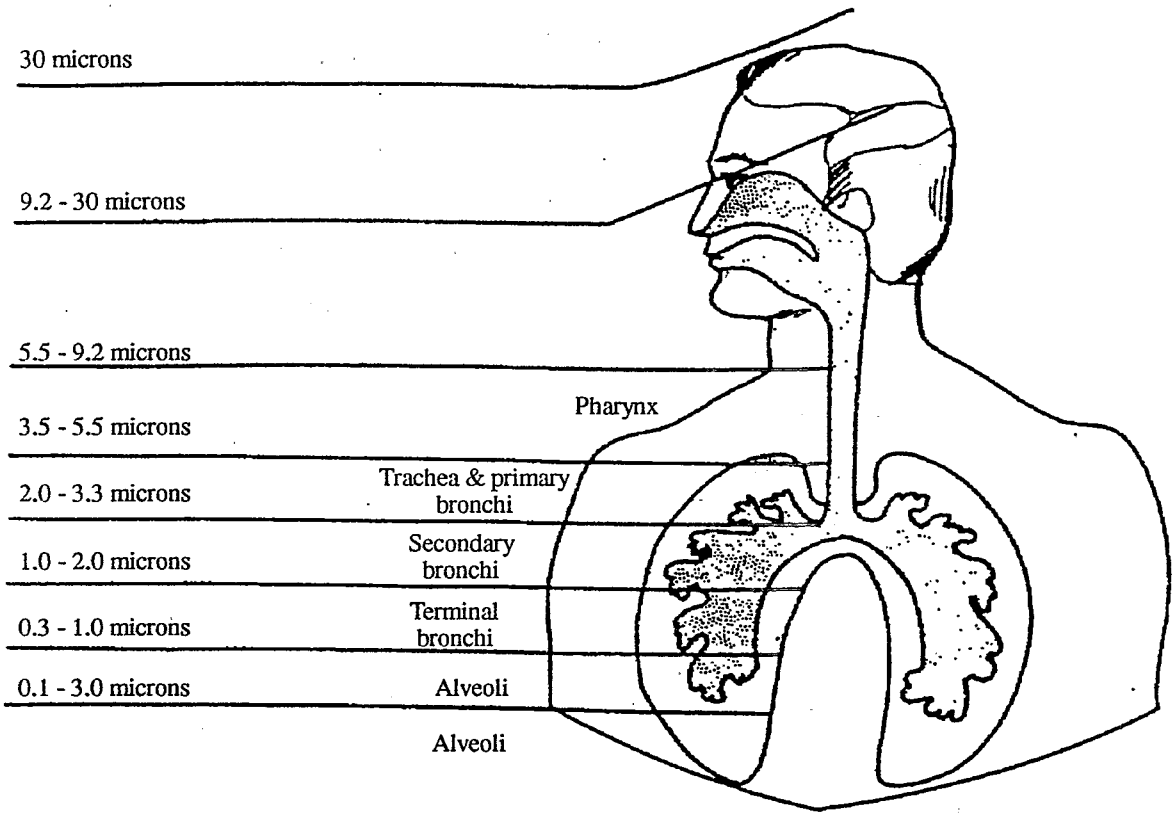

Figure 1. Depth of respiratory system penetration based on particle size.

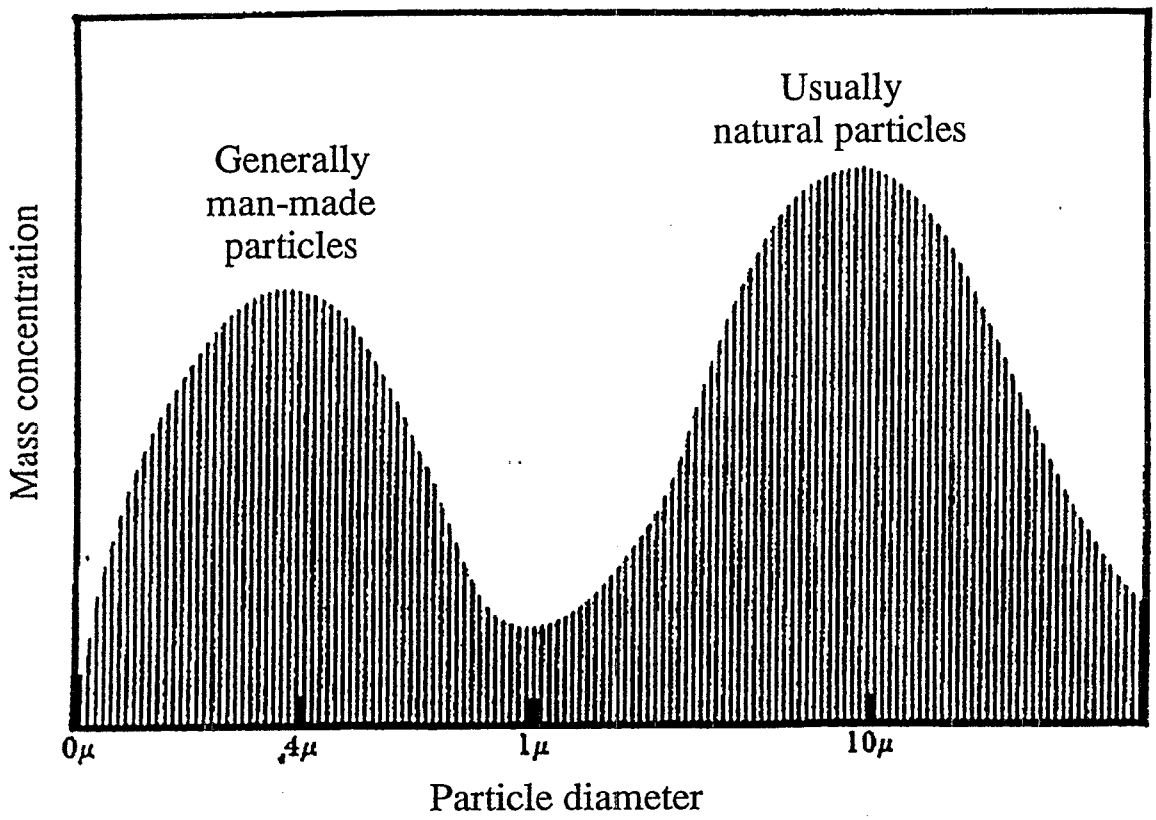

Figure 2. Bimodal distribution of particles in the atmosphere.

EPA/625/R-96/010a

Compendium of Methods for the Determination of Inorganic Compounds in Ambient Air

Compendium Method IO-2.1

SAMPLING OF AMBIENT AIR FOR TOTAL SUSPENDED PARTICULATE MATTER (SPM) AND PM_{10} USING HIGH VOLUME (HV) SAMPLER

Center for Environmental Research Information
Office of Research and Development
U.S. Environmental Protection Agency
Cincinnati, OH 45268

January 1997

Method IO-2.1

Acknowledgements

This Method is a part of *Compendium of Methods for the Determination of Inorganic Compounds in Ambient Air* (EPA/625/R-96/060a), which was prepared under Contract No. 68-C3-0315, WA No. 2-10, by Midwest Research Institute (MRI), as a subcontractor to Eastern Research Group, Inc. (ERG), and under the sponsorship of the U.S. Environmental Protection Agency (EPA). Justice A. Manning, Center for Environmental Research Information (CERI), and Frank F. McElroy, National Exposure Research Laboratory (NERL), both in the EPA Office of Research and Development, were the project officers responsible for overseeing the preparation of this method. Other support was provided by the following members of the Compendia Workgroup:

- James L. Cheney, Corps of Engineers, Omaha, NB
- Michael F. Davis, U.S. EPA, Region 7, KC, KS
- Joseph B. Elkins Jr., U.S. EPA, OAQPS, RTP, NC
- Robert G. Lewis, U.S. EPA, NERL, RTP, NC
- Justice A. Manning, U.S. EPA, ORD, Cincinnati, OH
- William A. McClenny, U.S. EPA, NERL, RTP, NC
- Frank F. McElroy, U.S. EPA, NERL, RTP, NC
- William T. "Jerry" Winberry, Jr., MRI, Cary, NC

This Method is the result of the efforts of many individuals. Gratitude goes to each person involved in the preparation and review of this methodology.

Author(s)

- William T. "Jerry" Winberry, Jr., Midwest Research Institute, Cary, NC

Peer Reviewers

- David Brant, National Research Center for Coal and Energy, Morgantown, WV
- John Glass, SC Department of Health and Environmental Control, Columbia, SC
- Jim Cheney, U.S. Army Corps of Engineers, Omaha, NB
- Margaret Zimmerman, Texas Natural Resource Conservation Commission, Austin, TX

DISCLAIMER

This Compendium has been subjected to the Agency's peer and administrative review, and it has been approved for publication as an EPA document. Mention of trade names or commercial products does not constitute endorsement or recommendation for use.

Method IO-2.1
Sampling of Ambient Air for Total Suspended Particulate Matter (SPM) and PM_{10} Using High Volume Sampler

TABLE OF CONTENTS

	Page
1. Scope	2.1-1
2. Applicable Documents	2.1-3
2.1 ASTM Documents	2.1-3
2.2 Other Documents	2.1-3
3. Summary of Method	2.1-3
4. Significance	2.1-4
5. Definitions	2.1-4
6. Apparatus Description	2.1-7
6.1 General Description	2.1-7
6.2 Filter Medium	2.1-7
6.3 Flow Control System	2.1-8
7. Calibration	2.1-9
7.1 Introduction	2.1-9
7.2 Summary of Calibration Procedures	2.1-10
7.3 Certification of an Orifice Transfer Standard	2.1-10
7.4 Procedure for a Mass-Flow-Controlled (MFC) High Volume Sampler	2.1-13
7.5 Procedure for a Volumetric-Flow-Controlled (VFC) Sampler	2.1-20
7.6 Sampler Calibration Frequency	2.1-26
8. Filters	2.1-26
8.1 Filter Handling	2.1-26
8.2 Visual Filter Inspection	2.1-27
9. Sampling Procedure	2.1-27
9.1 Summary	2.1-27
9.2 Siting Requirements	2.1-28
9.3 Sampler Installation Procedures	2.1-29
9.4 Sampling Operations	2.1-29
9.5 Sample Validation and Documentation	2.1-36
10. Interferences	2.1-37
11. Calculations, Validations, and Reporting of PM_{10} Data	2.1-38
12. Records	2.1-42
12.1 MFC Sampler	2.1-42
12.2 VFC Sampler	2.1-43
13. Field QC Procedure	2.1-44
13.1 QC Flow-Check Procedure--MFC Sampler	2.1-45
13.2 QC Flow-Check Procedure--VFC Sampler	2.1-48
14. Maintenance	2.1-52
14.1 Maintenance Procedures	2.1-52
14.2 Recommended Maintenance Schedules	2.1-52
14.3 Refurbishment of HV Samplers	2.1-54
15. References	2.1-54

Chapter IO-2
Integrated Sampling of Suspended Particulate Matter (SPM)

Method IO-2.1
SAMPLING OF AMBIENT AIR FOR TOTAL SUSPENDED PARTICULATE MATTER (SPM) AND PM_{10} USING HIGH VOLUME (HV) SAMPLER

1. Scope

1.1 Suspended particulate matter (SPM) in air generally is a complex, multi-phase system of all airborne solid and low vapor pressure liquid particles having aerodynamic particle sizes from below 0.01-100 μm and larger. Historically, SPM measurement has concentrated on total suspended particulates (TSP), with no preference to size selection.

1.2 The U. S. Environmental Protection Agency (EPA) reference method for TSP is codified at 40 CFR 50, Appendix B. This method uses a high-volume sampler (hi-vol) to collect particles with aerodynamic diameters of approximately 100 μm or less. The hi-vol samples 40-60 ft^3/min of air with the sampling rate held constant over the sampling period. The high-volume design causes the TSP to be deposited uniformly across the surface of a filter located downstream of the sampler inlet. The TSP hi-vol can be used to determine the average ambient TSP concentration over the sampling period, and the collected material subsequently can be analyzed to determine the identity and quantity of inorganic metals present in the TSP.

1.3 Research on the health effects of TSP in ambient air has focused increasingly on particles that can be inhaled into the respiratory system, i.e., particles of aerodynamic diameter less than 10 μm. The health community generally recognizes that these particles may cause significant adverse health effects. Recent studies involving particle transport and transformation strongly suggest that atmospheric particles commonly occur in two distinct modes: the fine (<2.5 μm) mode and the coarse (2.5-10.0 μm) mode. The fine or accumulation mode (also termed the respirable particulate matter) is attributed to growth of particles from the gas phase and subsequent agglomeration, while the coarse mode is made of mechanically abraded or ground particles. Particles that have grown from the gas phase (either because of condensation, transformation, or combustion) occur initially as very fine nuclei--0.05 μm. These particles tend to grow rapidly to accumulation mode particles around 0.5 μm which are relatively stable in the air. Because of their initially gaseous origin, particle sizes in this range include inorganic ions such as sulfate, nitrate, ammonia, combustion-form carbon, organic aerosols, metals, and other combustion products. Coarse particles, on the other hand, are produced mainly by mechanical forces such as crushing and abrasion. Coarse particles, therefore, normally consist of finely divided minerals such as oxides of aluminum, silicon, iron, calcium, and potassium. Coarse particles of soil or dust mostly result from entrainment by the motion of air or from other mechanical action within their area. Since the size of these particles is normally > 2.5 μm, their retention time in the air parcel is shorter than the fine particle fraction.

1.4 On July 1, 1987, the U. S. Environmental Protection Agency (EPA) promulgated a new size-specific air quality standard for ambient particulate matter. This new primary standard applies only to particles with aerodynamic diameters ≤ 10 micrometers (PM_{10}) and replaces the original standard for TSP. To measure concentrations of these particles, the EPA also promulgated a new federal reference method

(FRM). This method is based on the separation and removal of non-PM_{10} particles from an air sample, followed by filtration and gravimetric analysis of PM_{10} mass on the filter substrate.

1.5 The new primary standard (adopted to protect human health) limits PM_{10} concentrations to 150 μg/std. m^3 averaged over a 24-h period. These smaller particles are able to reach the lower regions of the human respiratory tract and, therefore, are responsible for most of the adverse health effects associated with suspended particulate pollution. The secondary standard, used to assess the impact of pollution on public welfare, has also been established at 150 μg/std. m^3.

1.6 Ambient air SPM measurements are used (among other purposes) to determine whether defined geographical areas are in attainment or non-attainment with the national ambient air quality standards (NAAQS) for PM_{10}. These measurements are obtained by the States in their State and local air monitoring station (SLAMS) networks as required under 40 CFR Part 58. Further, Appendix C of Part 58 requires that the ambient air monitoring methods used in these EPA-required SLAMS networks must be methods that have been designated by the EPA as either reference or equivalent methods.

1.7 Monitoring methods for particulate matter are designated by the EPA as reference or equivalent methods under the provisions of 40 CRF Part 53, which was amended in 1987 to add specific requirements for PM_{10} methods. Part 53 sets forth functional specifications and other requirements that reference and equivalent methods for each criteria pollutant must meet and explicit test procedures by which candidate methods or samplers are to be tested against those specifications. General requirements and provisions for reference and equivalent methods are also given in Part 53, as are the requirements for submitting an application to the EPA for a reference or equivalent method determination.

1.8 Several methods are available for measuring SPM in ambient air. As mentioned earlier, the most commonly used device is the hi-vol sampler, which consists essentially of a blower and a filter, and which is usually operated in a standard shelter to collect a 24-h sample. The sample is weighed to determine concentration and may be analyzed chemically. The high volume sampler is considered a reliable instrument for measuring the mass concentration of TSP in ambient air. When EPA first regulated TSP, the NAAQS was stated in terms of SPM captured on a filter with aerodynamic particle size of < 100 μm as defined by the TSP sampler; therefore, the TSP sampler was used as the reference method.

1.9 Under Part 53 requirements, reference methods for PM_{10} must be shown to use the measurement principle and meet other specifications set forth in 40 CFR 50, Appendix J. They must also include a PM_{10} sampler that meets the requirements specified in Subpart D of 40 CFR 53. Appendix J specifies a measurement principle based on extracting an air sample from the atmosphere with a powered sampler that incorporates the inertial separation of PM_{10} size range particles followed by the collection of PM_{10} particles on a filter over a 24 h period. The average PM_{10} concentration for the sample period is determined by dividing the net weight gain of the filter over the sample period by the total volume of air sampled, corrected to EPA's standard temperature (25°C) and standard pressure (760 mmHg). Other specifications for flow rate control and measurement, flow rate measurement device calibration, filter media characteristics and performance, filter conditioning before and after sampling, filter weighing, sampler operation, and correction of sample volume to EPA reference temperature and pressure are prescribed in Appendix J. In addition, sampler performance requirements in Subpart D of Part 53 include sampling effectiveness (the accuracy of the PM_{10} particle size separation capability) at each of the three wind speeds and at "50% cutpoint" (the primary measure of 10-μ particle size separation). Field tests

for sampling precision and flow rate stability are also specified. In spite of the instrumental nature of the sampler, this method is basically a manual procedure, and all designated reference methods for PM_{10} are therefore defined as manual methods.

1.10 This document describes the procedures for sampling SPM in ambient air for both TSP and PM_{10} based upon active sampling using a high volume air sampler. The ambient particle are collected on quartz fiber filters. The sampler collects TSP or PM_{10} ambient particles depending upon the type of inlet selected.

2. Applicable Documents

2.1 ASTM Documents

- D4096 *Application of the High Volume Sample Method for Collection and Mass Determination of Airborne Particulate Matter.*
- D1356 *Definition of Terms Related to Atmospheric Sampling and Analysis.*
- D1357 *Practice for Planning the Sampling of the Ambient Atmosphere.*
- D2986 *Method for Evaluation of Air Assay Media by the Monodisperse DOP (Dioctyl Phthalate) Smoke Test.*

2.2 Other Documents

- U. S. Environmental Protection Agency, *Quality Assurance Handbook for Air Pollution Measurement Systems, Volume I: A Field Guide for Environmental Quality Assurance*, EPA/600/R-94/038a.
- U. S. Environmental Protection Agency, *Quality Assurance Handbook for Air Pollution Measurement Systems, Volume II: Ambient Air Specific Methods (Interim Edition)*, EPA/600/R-94/038b.
- *Reference Method for the Determination of Particulate Matter in the Atmosphere*, 40 CFR 50, Appendix J.
- *Reference Method for the Determination of Suspended Particulates in the Atmosphere (High Volume Method)*, 40 CFR 50, Appendix B.
- *Reference Method for the Determination of Lead in Suspended Particulate Matter Collected from Ambient Air*, 40 CRF 50, Appendix G.
- *Reference Method for this Determination of Suspended Particulates in the Atmosphere (PM_{10} Method)*, 40 CFR 50, Appendix J.

3. Summary of Method

3.1 The sampling of a large volume of atmosphere, 1,600-2,400 m^3 (57,000-86,000 ft^3), with a high-volume blower, typically at a rate of 1.13-1.70 m^3/min (40-60 ft^3/min), is described in this method. The calibration and operation of typical equipment used in this sampling is also described.

3.2 Air is drawn into the sampler and through a glass fiber or quartz filter by means of a blower, so that particulate material collects on the filter surface. Without a size-selective inlet, this flow rate allows suspended particles having diameters less than 100-0.1 μm to be collected. The collection efficiencies for particles larger than 20 μm decreases with increasing particle size, and it varies widely with the angle of the wind with respect to the roof ridge of the sampler shelter. When glass fiber filters are used, particles 100-0.1 μm or less in diameters are ordinarily collected. With a size-select inlet, particles 10 μm diameter or less are collected on the quartz filter.

3.3 The upper limit of mass loading is determined by plugging the filter medium with sample material, which causes a significant decrease in flow rate. For very dusty atmospheres, shorter sampling periods will be necessary.

3.4 The volume of air sampled is determined by a flow-rate indicator. The instrument flow-rate indicator is calibrated against a reference orifice meter. The latter is a working standard which, in turn, has been calibrated against a master flow meter certified by the National Institute of Standards and Technology (NIST).

3.5 Airborne particulate matter retained on the filter may be examined or analyzed chemically by a variety of methods (ICP, ICP/MS, AA, GFAA, and NAA) as delineated in Inorganic Compendium Methods IO-3.2 through IO-3.7.

4. Significance

4.1 The area of toxic air pollutants has been the subject of interest and concern for many years. Recently the use of receptor models has resolved the elemental composition of atmospheric aerosol into components related to emission sources. The assessment of human health impacts resulting in major decisions on control actions by federal, state and local governments is based on these data. Accurate measures of toxic air pollutants at trace levels is essential to proper assessments.

4.2 The high volume sampler is commonly used to collect the airborne particulate component of the atmosphere. A variety of options available for the sampler provides broad versatility and allows the user to develop information about the size and quantity of airborne particulate material and, using subsequent chemical analytical techniques, information about the chemical properties of the particulate matter. The advent of inductively coupled plasma spectroscopy has improved the speed and performance of metals analysis in many applications.

5. Definitions

[Note: Definitions used in this document are consistent with those used in ASTM Methods. All pertinent abbreviations and symbols are defined within this document at point of use.]

5.1 **High-Volume Air Sampler (HV).** A device for sampling large volumes of an atmosphere for collecting the contained particulate matter by filtration. Consists of a high-capacity blower, a filter to collect suspended particles, and a means for measuring the flow rate.

5.2 Working Flow-Rate Standard. A flow-rate measuring device, such as a standard orifice meter, that has been calibrated against a master flow-rate standard. The working flow-rate standard is used to calibrate a flow measuring or flow rate indicating instrument.

5.3 Master Flow-Rate Standard. A flow-rate measuring device, such as a standard orifice meter, that has been calibrated against a primary standard.

5.4 Primary Flow-Rate Standard. A device or means of measuring flow rate based on direct primary observations such as time and physical dimensions.

5.5 Spirometer. A displacement gasometer consisting of an inverted bell resting upon or sealed by liquid (or other means) and capable of showing the amount of gas added to or withdrawn from the bell by the displacement (rise or fall) of the bell.

5.6 Absolute Filter. A filter or filter medium of ultra-high collection efficiency for very small particles (submicrometer size) so that essentially all particles of interest or of concern are collected. Commonly, the efficiency is 99.95% or higher for a standard aerosol of 0.3 μm diameter.

5.7 Calibration. The process of comparing a standard or instrument with one of greater accuracy (small uncertainty) to obtain quantitative estimates of the actual values of the standard being calibrated, the deviation of the actual value from a nominal value, or the difference between the value indicated by an instrument and the actual value.

5.8 Differential Pressure Meter. Any flow measuring device that operates by restricting air flow and measuring the pressure drop across the restriction.

5.9 Emissions. The total of substances discharged into the air from a stack, vent, or other discrete source.

5.10 Flowmeter. An instrument for measuring the rate of flow of a fluid moving through a pipe or duct system. The instrument is calibrated to give volume or mass rate of flow.

5.11 Impaction. A forcible contact of particles of matter. A term often used synonymously with impingement.

5.12 Impactor. A sampling device that employs the principle of impaction (impingement).

5.13 Impingement. The act of bringing matter forcibly in contact. As used in air sampling, refers to a process for the collection of particulate matter in which the gas being sampled is directed forcibly against a surface.

5.14 Inhalable Particles. Particles with aerodynamic diameters of <10 μm that are capable of being inhaled into the human lung.

5.15 Interference. An undesired positive or negative output caused by a substance other than the one being measured.

5.16 Mass Flowmeter. Device that measures the mass flow rate of air passing a point, usually using the rate of cooling or heat transfer from a heated probe.

5.17 Matter. The substance of which a physical object is composed.

5.18 Orifice Meter. A flowmeter, employing as the measure of flow rate the difference between the pressures measured on the upstream and downstream sides of the orifice (that is, the pressure differential across the orifice) in the conveying pipe or duct.

5.19 Aerodynamic Diameter (a.d.). The diameter of a unit density sphere having the same terminal settling velocity as the particle in question. Operationally, the size of a particle as measured by an inertial device.

5.20 Particle. A small discrete mass of solid or liquid matter.

5.21 Particulate. Solids of liquids existing in the form of separate particles.

5.22 Precision. The degree of mutual agreement between individual measurements, namely repeatability and reproducibility.

5.23 Pressure Gage. The difference in pressure existing within a system and that of the atmosphere. Zero gage pressure is equal to atmospheric pressure.

5.24 Rotameter. A device, based on the principle of Stoke's law, for measuring rate of fluid flow. It consists of a tapered vertical tube having a circular cross section, and containing a flow that is free to move in a vertical path to a height dependent upon the rate of fluid flow upward through the tube.

5.25 Sampling. A process consisting of the withdrawal or isolation of a fractional part of a whole. In air or gas analysis, the separation of a portion of an ambient atmosphere with or without the simultaneous isolation of selected components.

5.26 Standard. A concept that has been established by authority, custom, or agreement to serve as a model or rule in the measurement of quantity of the establishment of a practice or procedure.

5.27 Traceability to NIST. Documented procedure by which a standard is related to a more reliable standard verified by the National Institute of Standards Technology (NIST).

5.28 Uncertainty. An allowance assigned to a measured value to take into account two major components of error: The systematic error and the random error attributed to the imprecision of the measurement process.

6. Apparatus Description

6.1 General Description

6.1.1 The essential features of a typical non size-specific TSP high-volume sampler are shown in Figure 1. The high volume sampler is a compact unit consisting of a protective housing; an electric motor driven; a high-speed, high-volume blower; a filter holder capable of supporting a 203 x 254-mm (8 by 10 in.) filter; and a flow-controller for controlling the air-flow rate through the instrument at 39-60 f^3/min.

6.1.2 In operation, this traditional TSP sample draws ambient air into the sampler through the air inlet gap between the cover and the sampler housing walls (see Figure 2). The air inlet is uniform on all sides of the sampler to provide an effective particle capture air velocity between 20-35 cm/sec. at the recommended flow rate between 39-60 ft^3/min. The gable roof design of the sampler allows the sampled air to be evenly distributed over the surface of a downstream filter, where TSP is collected.

6.1.3 For PM_{10} measurement, the traditional gable roof of the TSP sampler is replaced with a an impactor design size-select inlet, as illustrated in Figure 3. For the impaction design, an air sample enters a symmetrical (therefore wind-direction insensitive) hood and is deflected upward into a buffer chamber. The buffer chamber is evacuated at a rate of 68 m^3/h (40 cfm) through multiple circular nozzles. Particles are accelerated as they pass through the nozzles to an impaction chamber (see Figure 4). Because of their momentum, particles having diameters larger than the inlet's 10-μm cut design impact the surface of the impaction chamber. Smaller particles rise through the impaction chamber at speeds slow enough to minimize reentrainment of the impacted particles and then pass through multiple vent tubes to the high-volume sampler's filter where they are collected.

6.1.4 The second size-select design for PM_{10} measurement is the cyclone inlet, as illustrated in Figure 5. The omnidirectional cyclone used for fractionation in this inlet allows particles to enter from all angles of approach. An angular velocity component is imparted to the sample air stream and the particles contained in it by a series of evenly spaced vanes. Larger particle removal occurs in an inner collection tube. This tube incorporates a "perfect absorber," which is an oil-coated surface to eliminate particle bounce and reentrainment. The sample flow (with the unremoved smaller particles) then enters an intermediate tube, where the trajectory is altered to an upward direction. An additional turn is then made to alter the flow to a downward trajectory to allow the remaining particles (i.e., PM_{10} fraction) to deposit on a filter for subsequent analysis. As with the impaction inlet, control of air velocities in the cyclonic inlet is critical to maintain the correct particle size cutpoint. Maintaining the correct design volumetric flow rate through the inlet is important. This design flow rate is specified by the manufacturer in the instruction manual. For example, a popular cyclonic impaction inlet has a design flow rate of 1.13 m^3/min.

6.2 Filter Medium

6.2.1 Selecting a filtration substrate for time-integrated SPM monitoring must be made with some knowledge of the expected characteristics and a pre-determined analytical protocol. For any given standard test method, the appropriate medium will normally be specified.

6.2.2 In high-volume sampling, four types of filter material have been used to capture SPM. They include cellulose fiber, quartz/glass fiber, mixed fiber and membrane filter types. Selecting a filter depends upon variables such as background metal content, artifact formation, and affinity for moisture.

The basic characteristics of the types of filter material used in high-volume sampling are outlined in Table 1, while useful filter properties are identified in Table 2. Several characteristics are important in selection of filter media. They are:

- **Particle Sampling Efficiency.** Filters should remove more than 99% of SPM from the air drawn through them, regardless of particle size or flow rate.
- **Mechanical Stability.** Filters should be strong enough to minimize leaks and wear during handling.
- **Chemical Stability.** Filters should not chemically react with the trapped SPM.
- **Temperature Stability.** Filters should retain their porosity and structure during sampling.
- **Blank Correction.** Filters should not contain high concentrations of target compound analytes.

6.2.3 Quartz fiber filters are the most commonly used filters for SPM sampling for determining mass loading. Typical characteristics of quartz fiber filters are (1) a fiber content of high purity quartz, (2) a binder of below 5% (zero for binderless types), (3) a thickness of approximately 0.5 mm, (4) a surface with no pinholes, and (5) an allowance of no more than 0.05% of smoke particles to pass through the filter at a pressure of 100 mm of water with a flow rate of 8.53 m/min (28 ft/min), as determined by a DOP smoke test (see ASTM Method D2986).

6.2.4 Quartz fiber filters are made from finely spun glass fiber by combining the fiber with an organic binder and compressing this material in a paper machine. These filters are increasingly used in air sampling. These filters have the ability to withstand high temperatures (up to 540°C). They are further typified by high-collection efficiency. In some cases, the organic binder may interfere with subsequent analysis, so the filter is flash-fired to remove the binder material. This action causes some loss in tensile strength and usually requires that a backing material be used during sampling. The quartz filters are nonhydroscopic, thus allowing them to be used in areas where humidity is high. Because they are glass, they are the filter choice for most corrosive atmospheres. All the filters in this category are fragile and must be handled with care. Quartz fiber filters, because of the high silicate content, are extremely difficult to ash by chemicals or heat. Therefore, extraction procedures are performed on these filters to remove the sample for subsequent chemical analysis. For this reason, flash-fired quartz filters are the major atmospheric sampling filters.

6.3 Flow Control System

The high-volume sampler employs two basic types of flow control systems. One is a mass-flow-control (MFC) system; the other is a volumetric-flow-control (VFC) system. Because the calibration and standard operating procedures differ considerably between these two types of flow-control systems, this method presents procedures that are control-system-specific. PM_{10} inlets can be used with either the MFC and VFC systems.

6.3.1 Mass-flow-control (MFC) system. The flow rate in a MFC system is actively sensed and controlled at a predetermined set point. Air is pulled through the filter into the intake of a blower and subsequently exits the sampler through an exit orifice, which facilitates measurement of the flow with a manometer or pressure recorder. The flow rate is controlled by an electronic mass-flow controller, which uses a flow sensor installed below the filter holder to monitor the mass flow rate and related electronic circuitry to control the speed of the motor accordingly to provide a constant sampling rate. The controlled flow rate can be changed by an adjustment knob on the flow controller.

6.3.2 Volumetric-flow-control (VFC) system. A VFC system maintains a constant volumetric flow rate through the inlet, rather than a constant mass flow rate as in the MFC system. In a popular commercial VFC system, a choked-flow venturi is operated such that the air attains sonic velocity in the throat of the device. In this "choked" mode, the flow rate is unaffected by downstream conditions, such

as motor speed or exit pressure and is a predictable function of upstream conditions, such as the stagnation pressure ratio and temperature. Thus, the volumetric flow is controlled without any moving parts or electronic components. In this type of flow control system, no means is provided for adjusting the controlled flow rate. The controlled flow rate is set by the manufacturer through engineering design of the venturi.

7. Calibration

7.1 Introduction

[Note: All sampling equipment must be properly calibrated. Calibration is the relationship between an instrumental output and the input of a known reference standard. The objective of this section is to provide technically sound flow-rate calibration procedures for the MFC and VFC HV samplers.]

[Note: Consistency of temperature and barometric pressure is required. All temperatures should be expressed in kelvin (K = °C + 273). All barometric pressures should be expressed in mm Hg. Avoid calibrating an HV sampler using one set of units and then performing sample calculations using another set.]

7.1.1 HV sampler inlet. Two types of size-selective inlets available are impaction and cyclonic for monitoring inhalable particles (< 10 μm). The particle size discrimination characteristics of both the impaction and cyclonic type inlets depend critically on maintaining certain air velocities within the inlet; a change in velocity will result in a change in the nominal particle size collected. For this reason, the flow rate through the inlet must be maintained at a constant value that is as close as possible to the inlet's design flow rate. The design flow rate for a given sampler is specified in the sampler's instruction manual. The manual may also provide tolerance limits (or upper and lower limits) within which the sampler flow must be maintained. If the tolerance is not specified by the manufacturer, it should be assumed to be ±10%.

7.1.1.1 The symmetrical design of the impaction inlet (see Figure 4) ensures wind-direction insensitivity. Ambient air that is drawn into the inlet is evacuated from the buffer chamber through nine acceleration nozzles into the first impaction chamber, where initial particle separation occurs. The air is then accelerated through an additional 16 jets into a second impaction chamber. The acceleration jets have critical diameters calculated by the manufacturer to provide the necessary changes in velocity to effect correct particle size fractionation within the impaction chambers. The air flow finally exits the inlet through nine vent tubes onto a sample filter. Because air velocities are critical to maintain the correct particle size cutpoint within the inlet, maintaining the correct design flow rate through the inlet is important. This design flow rate is specified by the manufacturer in the instruction manual. For example, the design flow rate for one popular impaction inlet is 1.13 m^3/min.

7.1.1.2 The omnidirectional cyclone inlet (see Figure 5) used for fractionation allows particles to enter from all angles of approach. A angular velocity component is imparted to the sample air stream and the particles contained in it by a series of evenly spaced vanes. Larger particle removal occurs in an inner collection tube. This tube incorporates a "perfect absorber," an oil-coated surface to eliminate particle bounce and reentrainment. The sample flow (with the unremoved smaller particles) then enters an intermediate tube, where the trajectory is altered to an upward direction. An additional turn is then made to alter the flow to a downward trajectory to allow the remaining particles (i.e., PM_{10} fraction)

ultimately to deposit on a filter for subsequent analysis. As with the impaction inlet, control of air velocities in the cyclonic inlet is critical to maintain the correct particle size cutpoint. Maintaining the correct design volumetric flow rate through the inlet is important. This design flow rate is specified by the manufacturer in the instruction manual. For example, as in the case of the impaction inlet, a popular cyclonic inlet also has a design flow rate of 1.13 m^3/min.

7.1.2 Total suspended particulate (TSP). As illustrated in Figure 2, particles of less than 100 μm are collected at a flow rate of 1.13-1.70 m^3/min (40-60 ft^3/min) using the conventional high-volume sampler, without size selection.

7.2 Summary of Calibration Procedures

[Note: During calibration, a closure plate perforated with a number of circular orifices is connected to the inlet of the sampler. The pressure drop across this orifice plate provides a measure of instrument air flow rate at any time. This pressure drop may be indicated by a rotameter, manometer, or other pressure-responsive device traceable to an NIST certified standard.]

7.2.1 A simple and sufficiently accurate method of calibrating is to compare the sampler meter with an orifice meter (working standard) that has been calibrated against a primary or master standard such as a Root's meter.

7.2.2 The preferable primary standard is a Roots Meter® of sufficient capacity to allow an accurate time-volume reading, which would be at least 30 s.

7.2.3 A positive displacement pump or blower may be used as a master flow-rate standard. In this case, the delivery rate of the master standard must be known accurately and the equipment must be in sound mechanical condition (no bypass leakage).

7.3 Certification of an Orifice Transfer Standard

[Note: The following certification procedure is applicable to an orifice transfer standard such as those that have been used previously in the calibration of both the traditional HV sampler and the PM_{10} samplers. Two common types of orifice devices are available: one equipped with a set of fixed resistance plates (e.g., a reference flow [Ref] device or a top-hat orifice) and one with an externally variable resistance valve. The series of plates normally provided by the orifice manufacturer include an 18-, 13-, 10-, 7-, and 5-hole plate. Unfortunately, the 5-hole plate provides too low a flow rate to be useful for HV calibration, and other plates may produce flow rates substantially outside the design flow-rate range of the commercially available HV inlets. One may opt to fabricate or procure a different series of resistance ranges or use the variable-resistance type orifice device.]

7.3.1 Orifice Calibration Procedure.

7.3.1.1 Assemble the following equipment (see Figure 6):

- Orifice transfer standard (i.e., top-hat orifice, variable orifice, or ReF device) to be calibrated.
- Water or oil manometer with a 0 the 400 mm (0-16") range and minimum scale divisions of 1 mm (0.1"). This manometer should be permanently associated with the orifice transfer standard.
- Variable voltage transformer, a set of resistance plates, or available flow orifice (see Figure 7).
- Calibrated positive displacement, standard volume meter (such as a Roots Meter®) traceable to National Institute of Standards and Technology (NIST).

[Note: As they are sold, standard volume meters may not be traceable to NIST. Traceability can be established directly through NIST or indirectly through the meter manufacturer's repair department. Periodic recertification is not normally required under clean service conditions unless the meter has been damaged and must be repaired. In general, damage will be indicated by a substantial (e.g., 50%) increase in the pressure drop across the meter. The meter's traceability certificate should contain a graph of the pressure drop as a function of flow rate.]

- High-volume air mover (e.g., a blower motor from a HV sampler).
- Accurate stopwatch.
- Mercury manometer, with a 0-200 mm (0-8") range and minimum scale divisions of 1 mm (0.1").
- Thermometer, capable of accurately measuring temperatures over the range of 0-50°C (273-323 K) to the nearest ±1°C and referenced to an NIST or ASTM thermometer within ±2°C at least annually.
- Barometer, capable of accurately measuring ambient barometric pressure over the range of 500-800 mm Hg (66-106 kPa) to the nearest mm Hg and reference within ±5 mm Hg of a barometer of known accuracy at least annually.
- Orifice transfer standard certification worksheet (see Figure 8).

7.3.1.2 Record on the orifice transfer standard certification worksheet the standard volume meter's serial number; orifice transfer standard's type, model, and serial number; the person performing the certification; and the date.

7.3.1.3 Observe the barometric pressure and record it as Pa. Read the ambient temperature in the vicinity of the standard volume meter and record it as Ta (K = °C + 273).

7.3.1.4 Connect the orifice transfer standard to the inlet of the standard volume meter. Connect the mercury manometer to measure the pressure at the inlet of the standard volume meter. Connect the orifice (water or oil) manometer to the pressure tap on the orifice transfer standard. Connect a high-volume air mover to the outlet side of the standard volume meter. Make sure that all gaskets are present and are in good condition.

7.3.1.5 Check that the standard volume meter table is level and adjust its legs if necessary.

7.3.1.6 Check for leaks by temporarily clamping both manometer lines (to avoid fluid loss) and blocking the orifice with a large-diameter rubber stopper, wide duct tape, or other suitable means. Start the high-volume air mover and note any change in the standard volume meter's reading. The reading should remain constant. If the reading changes, locate any leaks by listening for a whistling sound and/or retightening all connections, making sure that all gaskets are properly installed.

[Note: Avoid running the sampler for longer than 30 s at a time with the orifice blocked. This precaution will reduce the chance that the motor will be overheated due to the lack of cooling air. Such overheating can shorten the motor's lifetime; it can raise temperatures to the point of defeating the electrical insulation which could result in fire or electric shock to the user.]

7.3.1.7 After satisfactorily completing the leak check, turn off the high-volume air sampler, unblock the orifice, and unclamp both manometer lines. Zero the water and mercury manometers by sliding their scales so that their zero lines are even with the bottom of the meniscuses.

7.3.1.8 Turn on the high-volume air sampler. Adjust the variable voltage transformer to achieve an appropriate flow rate (i.e., within the approximate range of 0.9-1.3 m^3/min (32-46 ft^3/min)). If

necessary, use fixed resistance plates or the variable resistance valve to achieve the appropriate flow rate (see Figure 7). The use of fixed resistance plates is discouraged (but not prohibited) because the leak check must be repeated each time that a plate is installed.

7.3.1.9 After setting a flow rate, allow the system to run for at least 1 min to attain a constant motor speed. Observe the standard volume meter dial reading and simultaneously start the stopwatch. Error in reading the meter dial can be minimized by starting and stopping the stopwatch on whole number dial readings (e.g., 4091.00).

7.3.1.10 Record the initial volume that the meter dial indicated when the stopwatch was started. Maintain this constant flow rate until at least 3 m^3 of air have passed through the standard volume meter. Record the standard volume meter's inlet pressure manometer reading as ΔHg and the orifice manometer reading as ΔH_2O. If ΔH_2O changes significantly during the run, abort the run and start again.

7.3.1.11 When at least 3 m^3 of air have passed through the system, note the standard volume meter reading and simultaneously stop the stopwatch. Record the final volume that the meter dial was indicating when the stopwatch was stopped. Record the elapsed time (Time) indicated on the stopwatch.

7.3.1.12 Calculate the volume measured by the standard volume meter (Vol.) using the following equation:

$$\Delta \text{ Vol.} = \text{Final Volume} - \text{Initial Volume}$$

7.3.1.13 Correct this volume to ambient atmosphere pressure.

$$Va = \Delta \text{ Vol. } (Pa - \Delta \text{ Hg})/Pa$$

where:

Va = actual volume at ambient barometric pressure, m^3.
Δ Vol. = actual volume measured by the standard volume meter, m^3.
Pa = ambient barometric pressure during calibration, mm Hg.
Δ Hg = differential pressure at inlet to volume meter, mm Hg.

7.3.1.14 Calculate the actual volumetric flow rate (m^3/min).

$$Qa = Va/\Delta \text{ Time}$$

where:

Qa = actual volumetric flow rate through the orifice, m^3/min.
Δ time = elapsed time, min.

7.3.1.15 Repeat Sections 7.3.1.8 through 7.3.1.14 for at least four additional flow rates within the approximate range of 0.9-1.3 m^3/min (32-46 ft^3/min). At least five evenly distributed different flow rates are required, and at least three flow rates must be in the specified inlet flow-rate interval (1.02-1.24 m^3/min [36-44 ft^3/min]). Better calibration precision may be obtained by running additional flow rates or repeating the flow rates.

7.3.1.16 For each flow, compute $[(\Delta H_2O)(Ta/Pa)]^{1/2}$, and plot these values against the corresponding values of Qa. Draw the orifice transfer standard's certification curve. For the model $[(\Delta H_2O)(Ta/Pa]^{1/2} = m (Qa) + b$, calculate the linear least squares regression's slope (m), intercept (b), and correlation coefficient (r) of the certification relationship. Plot the regression line on the same

graph as the calibration data, as illustrated in Figure 9. A certification graph should be readable to 0.02 m^3/min.

7.3.1.17 If any calibration point does not fall within ±2% of the line, rerun the point, recalculate, and replot.

7.3.1.18 For subsequent use of the orifice transfer standard, calculate Qa from the calibration relationship as:

$$Qa(orifice) = \{[(\Delta H_2O)(Ta/Pa)]^{1/2} - b\} \{l/m\}$$

where:

Qa(orifice) = actual volumetric flow rate as indicated by the orifice transfer standard, m^3/min
ΔH_2O = pressure drop across the orifice, mm H_2O.
Ta = ambient temperature during use, K (K = °C + 273).
b = intercept of the orifice calibration relationship.
m = slope of the orifice calibration relationship.

7.3.2 Orifice Transfer Standard Calibration Frequency. Upon receipt and at l-yr intervals, the calibration of the orifice transfer standard should be certified with a standard volume meter (such as a Roots Meter®) traceable to NIST. An orifice transfer standard should be visually inspected for signs of damage before each use and should be recalibrated if the inspection reveals any nicks or dents.

7.4 Procedure for a Mass-Flow-Controlled (MFC) High Volume Sampler

The MFC sampler calibration procedure presented in this section relates known flow rates to the pressure in the exit orifice plenum. The known flow rates are determined by an orifice transfer standard that has been certified according to the procedure presented in Section 7.3.1. The exit orifice plenum is the area within the motor housing (below the motor unit) that contains the air flow just before it is exhausted to the atmosphere through the exit orifice. This exit orifice plenum pressure should be measured with a 25-cm (10") water or oil manometer. Also, each sampler should have its own dedicated manometer, which can be conveniently mounted to the side of the sampler housing. Other types of pressure measurement devices may be used provided they have comparable accuracy. The 4" continuous pressure (flow) recorders of the type often supplied with high volume PM_{10} samplers are generally not sufficiently accurate and are not recommended for quantitative sampler pressure or flow measurements. These flow recorders should be used only for nonquantitative determination that the flow was approximately constant and uninterrupted over the sample period. The flow recorder may be connected in parallel with the manometer or other pressure measuring device, using a tee or "y" tubing connection. For this MFC calibration procedure, the following conditions are assumed:

- The high volume PM_{10} sampler is equipped with a mass flow controller to control its sample flow rate.
- The sampler flow rate is measured by measuring the exit orifice plenum pressure, using a water or oil manometer [or, if necessary, a continuous-flow recording device using square-root-scale chart paper].
- The transfer standard for the flow-rate calibration is an orifice device equipped with either a series of resistance plates or an integral variable-resistance valve. The pressure drop across the orifice is measured by an associated water or oil manometer.

[Note: Because flow recorders are still widely used for quantitative flow measurements, the calibration procedure includes specific instructions for quantitatively calibrating a flow recorder. These flow recorder instructions are enclosed in brackets [ ] and should be used only when a manometer or other pressure measurement device cannot be used.]

7.4.1 Calibration Equipment.

7.4.1.1 Orifice transfer standard with calibration traceable to NIST (see Section 7.3).

7.4.1.2 An associated water or oil manometer, with a 0-400 mm (0-16") range and an minimum scale division of 2 mm (0.1")

[Note: Digital manometers may also be used in place of water or oil manometers, especially in cold/frigate climates. Ensure the battery in the manometer is new before use.]

7.4.1.3 A water or oil manometer, with a 0-400 mm (0-16") range and a minimum scale division of 2 mm (0.1") for measurement of the sampler exit orifice plenum pressure. This manometer should be associated with the sampler.

[Note: Manometers used for field calibration may be subject to damage or malfunction and should thus be checked frequently.]

7.4.1.4 Thermometer, capable of accurately measuring temperature over the range of 0-50°C (273-323 K) to the nearest ±1 °C and referenced to an NIST or ASTM thermometer within ±2 °C at least annually.

7.4.1.5 A portable aneroid barometer (e.g., a climber's or engineer's altimeter) capable of accurately measuring ambient barometric pressure over the range of 500-800 mm Hg (66-106 kPa) to the nearest mm Hg and referenced within ±5 mm Hg of a barometer of known accuracy at least annually.

7.4.1.6 Miscellaneous handtools, calibration data sheets or station log book, and 51 mm (2") duct tape.

7.4.2 Multipoint Flow-Rate Calibration. The procedure presented here is basic and generic, given the assumptions listed in Section 7.4. More detailed calibration procedures, variations, or alternative procedures may be presented in the manufacturer's instruction manual. The manual should be reviewed carefully and the various calibration variations or alternative procedures should be evaluated. In-house equipment and personnel, procedural simplicity and uniformity, and subsequent data applications should be considered in establishing the specific, detailed calibration procedure to be implemented.

[Note: Do not attempt to calibrate the MFC sampler under windy conditions. Short-term wind velocity fluctuations will produce variable pressure readings by the orifice transfer standard's manometer. The calibration will be less precise because of pressure variations.]

7.4.2.1 Set up the calibration system as recommended by the manufacturer. A typical MFC PM_{10} sampler calibration configuration is illustrated in Figure 10. MFC samplers are calibrated without a filter or filter cassette installed.

7.4.2.2 Disconnect the motor from the flow controller and plug it directly into a stable line voltage source (i.e., the sampler's on-off timer, if so equipped, or other source of the line voltage).

7.4.2.3 Install the orifice transfer standard and its adapter faceplate on the sampler. Check all gaskets and replace any questionable ones.

[Note: Tighten the faceplate nuts evenly on alternate corners to properly align and seat the gaskets. The nuts should be only hand-tightened because too much compression can damage the sealing gasket.]

7.4.2.4 Select the first calibration flow rate and install the appropriate resistance plate or adjust the variable orifice valve. At least four flow rates are required to define the calibration relationship. For resistance plate orifices, make sure that the orifice and resistance plate gaskets are in place and the orifice is not cross-threaded on the faceplate.

7.4.2.5 To leak check, block the orifice with a large-diameter rubber stopper, wide duct tape, or other suitable means. Seal the pressure port with a rubber cap or similar device. Turn on the sampler. Gently rock the orifice transfer standard and listen for a whistling sound that would indicate a leak in the system. A leak-free system will not produce an upscale response in the sampler's exit orifice manometer or flow recorder. Leaks are usually caused either by a damaged or missing gasket between the orifice transfer standard and the faceplate or by cross-threading of the orifice transfer standard on the faceplate. All leaks must be eliminated before proceeding with the calibration. When the system is determined to be leak-free, turn off the sampler and unblock the orifice.

[Note: Avoid running the sampler for longer than 30 s at a time with the orifice blocked. This precaution will reduce the chance that the motor will be overheated due to the lack of cooling air. Such overheating can shorten the motor's lifetime and can raise temperatures to the point of defeating the electrical insulation, which could result in fire or electric shock to the user.]

7.4.2.6 Inspect the connecting tubing of both manometers for crimps or cracks. Open the manometer valves (if present) and blow gently through the tubing, watching for the free flow of the fluid. Adjust the manometers' sliding scales so that their zero lines are at the bottom of the meniscuses. Connect the orifice transfer standard manometer to the orifice transfer standard. Connect the sampler's exit orifice manometer [and the continuous-flow recorder, if used] to the exit orifice plenum port. Ensure that one side of each manometer is open to atmospheric pressure. Make sure that the tubing fits snugly on the pressure ports and on the manometer.

7.4.2.7 If a continuous flow recorder is to be used quantitatively in lieu of a manometer, record the site location, sampler S/N, date, and the operator's initials on the blank side of a clean recorder chart. Make sure the chart has a square-root scale. Open the front door of the sampler and install the clean recorder chart.

7.4.2.8 Read and record the following parameters on the HV data sheet. An example calibration data sheet for the MFC sampler is illustrated in Figure 11.

- Date, location, and operator's signature.
- Sampler S/N and model.
- Ambient Pa, mm Hg.
- Ambient temperature (Ta), K (K = °C + 273).
- Orifice S/N and calibration relationship.

[Note: Consistency of temperature and barometric pressure units is required. All temperatures should be expressed in kelvin (K = °C + 273). Also, all barometric pressures should be expressed in

mm Hg. Avoid calibrating a sampler using one set of units and then performing sampler calculations using another set.]

[Note: Ideally, the temperature of the air in the exit orifice plenum should be measured because it will be somewhat higher than ambient temperature. However, an adequate approximation of this temperature may be obtained by adding 30 K to the ambient temperature. This addition is incorporated in the calculations given in Section 7.4.3.]

7.4.2.9 Turn on the sampler and allow it to warm up to operating temperature (3-5 min). Then read and record the orifice transfer standard's manometer deflection, ΔH_2O (in. H_2O), and the corresponding sampler's manometer deflection, Δ Pex [or flow recorder chart reading, I].

[Note: The sampler inlet may be partially lowered over the orifice transfer standard to act as a draft shield (if a shield is not otherwise provided). Use a block to provide at least 2" of clearance at the bottom for air flow and for the manometer tubing.]

7.4.2.10 Install the other resistance plates or adjust the variable orifice value to obtain each of the other calibration flow rates and repeat Section 7.4.2.9 for each. At least four calibration flow rates are required.

7.4.2.11 Plot the calibration data on a sheet of graph paper as specified in Section 7.4.3.4.

[Note: The data should be plotted in the field as the calibration is occurring, rather than afterwards back at the laboratory.]

Repeat Section 7.4.2.9 for any data that are questionable on the plot.

[Note: Running additional calibration points at differing flow rates or repeating the calibration points at the same flow rates is encouraged to improve the precision of the calibration.]

7.4.2.12 Turn off the sampler and remove the orifice transfer standard.

7.4.2.13 Reconnect the sampler motor to the flow controller.

7.4.2.14 Perform the calibration calculations presented in the following section. The data generated will be used to set the mass flow controller (see Section 7.4.4) to a value that will result in optimal volumetric flow based on the seasonal average temperature and barometric pressure at the monitoring site.

7.4.3 Calibration Calculations. Gather all calibration data, including the orifice calibration information and the sampler calibration data sheet (and, if used, the flow recorder chart, which should graphically display the various calibration flow rates).

[Note: These calculations should be done at the time of the calibration, rather than later. This approach will allow additional calibration points to be taken if questions arise about the data that have already been obtained.]

7.4.3.1 Verify that the orifice transfer standard calibration relationship is current and traceable to an acceptable primary standard.

7.4.3.2 Calculate and record Qa for each calibration point from the orifice calibration information using the following equation.

$$Qa(orifice) = \{\Delta H_2O(Ta/Pa)]^{1/2} - b\} \{l/m\} \text{ where:}$$

Qa(orifice) = actual volumetric flow rate as indicated by the transfer standard orifice, m^3/min
ΔH_2O = pressure drop across the orifice, in. H_2O.
Ta = ambient temperature during use, K (K = °C + 273).
Pa = ambient barometric pressure during use, mm Hg.
b = intercept of the orifice calibration relationship.
m = slope of the orifice calibration relationship.

7.4.3.3 Calculate and record the quantity for each calibration point as:

$$\Delta Pext = [\Delta Pex(Ta+30)/Pa]^{1/2}$$

where:

Δ Pext = transformed manometer reading.
Δ Pex = sampler manometer reading, in. H_2O Ta = ambient temperature, K (K = °C +273).
Pa = ambient barometric pressure, mm Hg.

[If a continuous-flow recorder is used quantitatively, calculate and record the quantity [It] as follows:

$$[It] = I[Ta+ 30)/Pa]^{1/2}$$

where:

[It] = transformed flow recorder chart reading.
I = flow recorder chart reading, arbitrary units on square root scale.

[Note: If recorder charts with linear scales are used, substitute $(I)^{1/2}$ for I in the above equation.]

7.4.3.4 On a sheet of graph paper, plot the calculated Qa(orifice) flow rates on the x-axis and the transformed sampler manometer response, Δ Pext [or the transformed flow recorder reading, It], on the y-axis.

Because determining the sampler's average operational flow rate (Qa) during a sample period depends on the ambient average temperature and pressure, using a graphic plot of the calibration relationship is not recommended for subsequent data reduction. This plot is used only to visually assess the calibration points to see if any should be rerun. Plot the regression line on the same graph paper as the calibration data. For the regression model y = mx + b, let y +2 Δ Pext and x = Qa(Orifice) so that the model is given by:

$$\Delta Pext = m[Qa(orifice)] + b$$

For the flow recorder, the model is:

$$It = m[Qa(orifice)] + b]$$

Using a programmable calculator or a calculation data form, determine the linear regression slop (m), intercept (b), and correlation coefficient (r) and record them on the data sheet. A five-point calibration should yield a regression equation with a correlation coefficient of $r > 0.990$, with no point deviating more than ± 0.04 m^3/min from the value predicted by the regression equation. Plot the regression line on the same graph paper that has the individual calibration points.

7.4.3.5 For subsequent sample periods, the sampler's average actual operational flow rate, $\overline{Qa}$, is calculated from the calibration slope and intercept using the equation.

$$\overline{Qa} = \{\Delta\ \overline{Pex}(Tav+30)/Pav]^{1/2} - b\}\ \{l/m\}$$

where:

$\overline{Qa}$ = the sampler's average actual flow rate, m^3/min.
$\Delta\ \overline{Pex}$ = average of initial and final sampler manometer readings ($\Delta\ Pex_i + \Delta\ Pex_f$), mm Hg.
Tav = average ambient temperature for the sample period, K(K=°C+273).
Pav = average ambient pressure for the sampling period, mm Hg.
b = intercept of the sampler calibration relationship.
m = slope of the sampler calibration relationship.

[For the flow controller,

$$\overline{Qa} = \{I\,(Tav + 30)/Pav]^{1/2} - b\}\ \{l/m\}$$

where:

I = average flow recorder reading for the sample period.]

[Note: If recorder charts with linear scales are used, substitute $(I)^{1/2}$ for (I) in the above equation.]

7.4.4 Mass Flow Controller Adjustment Procedure. The controlled flow rate of an MFC sampler is adjustable and must be set to the proper design flow rate. The constant mass flow maintained by the MFC causes the actual volumetric flow rate through the inlet to fluctuate as the ambient temperature and barometric pressure change at the monitoring site. Normally, the range of these fluctuations is within the allowable tolerance limits for the inlet. However, the flow-rate set point of the mass flow controller must be correctly adjusted so that the deviations are "centered" with respect to the seasonal average temperature and barometric pressure at the site, not the temperature and pressure prevailing at the time of setting. The correct seasonal volumetric setpoint flow rate (SFR) at Ta and Pa has had the same mass flow rate as the inlet design volumetric flow rate at Ts and Ps.

[Note: The correct SFR may differ from day to day and may be somewhat higher or lower than the inlet design flow rate on any particular day.]

7.4.4.1 Determine the seasonal average temperature (Ts) and seasonal average pressure (Ps) at the site and record them on the calibration data sheet. (Determination of the number of "seasons," i.e., the number of different seasonal average temperatures needed for the year, is left to the discretion of the operator.)

7.4.4.2 Calculate SFR and record on the calibration data sheet:

$$SFR = (1.13)\ (Ps/Pa)(Ta/Ts)$$

where:

SFR = set-point actual volumetric flow rate for adjustment of the mass flow controller, based on seasonal average temperature and average pressure at site, m^3/min.
1.13 = inlet design flow rate (as specified by the manufacturer), m^3/min.
Ps, Pa = seasonal average and current ambient barometric pressure at the site, respectively, mm Hg.
Ts, Ta = seasonal average and current ambient temperature, respectively, K (K = °C + 273).

7.4.4.3 Calculate and record on the sampler's calibration data sheet the sampler set-point manometer reading [or flow recorder reading] that corresponds to the SFR calculated in Section 7.4.4.2.

$$SSP = [Pa/(Ta + 30)][m(SFR) + b]^2$$

where:

SSP = sampler set-point manometer reading, in H_2O.
Pa = ambient barometric pressure, mm Hg.
Ta = ambient temperature, K (K = °C + 273).
m = slope of the sampler's calibration relationship.
SFR = set-point flow rate from 7.4.4.2, m^3/min.
b = intercept of the sampler's calibration relationship.
[For the flow recorder,

$$SSP = [m(SFR) + b]\ [Pa/(Ta+30)]^{1/2}]$$

7.4.4.4 Visually check to make sure the motor is connected to the mass flow controller and the manometer is properly connected.

7.4.4.5 Install a clean filter (in a filter cassette) in the sampler according to the manufacturer's instructions. [If the continuous flow recorder is used quantitatively, install a clean chart and verify that the recorder is zeroed (i.e., the pen rests on the innermost circle of the chart).]

7.4.4.6 Turn on the sampler and allow it to warm up to operating temperature (3-5 min).

7.4.4.7 Following the manufacturer's instructions, adjust the mass flow controller until the manometer reading [or flow recorder response] indicates the sampler set point (SSP) as calculated in Section 7.4.4.3.

7.4.4.8 Verify that the flow controller will maintain this flow rate for at least 10 min. Turn off the sampler.

7.4.4.9 The sampler can now be prepared for the next sample run day.

7.5 Procedure for a Volumetric-Flow-Controlled (VFC) Sampler

The VFC sampler calibration procedure presented in this section relates known flow rates (Qa, as determined by an orifice transfer standard) to the ratio of the stagnation pressure to the ambient barometric pressure (Pl/Pa). The stagnation pressure (Pl) is the air pressure inside the sampler in the area just under the filter. VFC samplers have a stagnation pressure tap or port through which the stagnation pressure can be measured. A VFC sampler may also have an exit orifice below the motor similar to those in MFC samplers. In this case, the sampler flow rate can be measured and calibrated using the exit orifice plenum pressure generally described in Section 7.4. However, using the stagnation pressure generally provides a more accurate indication of sampler flow rate. Additionally, a continuous-flow recorder may be connected to the exit orifice pressure tap for nonquantitative determination that the flow rate was constant and uninterrupted over the sample period.

The stagnation pressure should be measured with a 0-1000 mm (0-36") oil, water, or digital manometer. Also, each sampler should have its own dedicated manometer, which can be conveniently mounted to the side of the sampler housing. Other types of pressure measurement instruments may be used provided they have comparable accuracy. However, the 4" continuous pressure (i.e., flow) recorders often supplied with HV samplers are generally not sufficiently accurate and are **not recommended** for quantitative sampler pressure or flow rate measurements.

The VFC sampler's flow control system is a choke-flow venturi. This system must be precisely sized for a given average annual temperature and pressure because no means is provided for the user to adjust the operational flow rate. Therefore, the purchasing agency should notify the manufacturer of the operational location of the sampler; differences in temperature and pressure between the shipping address and the monitoring site may result in an incorrect operational flow rate. As with the MFC sampler, both the ambient temperature and barometric pressure readings must be determined or estimated during the sampling period for the subsequent calculation of total sampler volume in standard volume units.

For this VFC calibration procedure, the following conditions are assumed:

- The VFC sampler uses a choked-flow venturi to control the actual volumetric flow rate.
- The sampler flow rate is measured by measuring the stagnation pressure ratio, and the sampler is not equipped with a continuous flow recorder.
- The sampler inlet is designed to operate at a constant actual volumetric flow rate of 1.13 m^3/min.
- The transfer standard for the flow-rate calibration is an orifice device equipped with either a series of resistance plates or an integral variable-resistance valve. The pressure drop across the orifice is measured by an associated water or oil manometer.
- The sampler will be calibrated in actual volumetric flow-rate units (Qa), and the orifice transfer standard is also calibrated in Qa, as specified in Section 7.3.

7.5.1 Calibration Equipment.

7.5.1.1 Orifice transfer standard with proper calibration traceable to NIST (see Section 7.3).

7.5.1.2 An associated water, oil, or digital manometer, with a 0-400 mm (0-16") range and minimum scale divisions of 2 mm (0.1").

7.5.1.3 An oil, water, or digital manometer, with a 0-1000 mm (0-36") range and minimum scale divisions of 2 mm (0.1") or other pressure measurement device for measurement of the sampler stagnation pressure. Ideally, this manometer (or other pressure instrument) should be associated with the sampler.

[Note: Manometers used for field calibration may be subject to damage or malfunction and should thus be checked frequently.]

7.5.1.4 Thermometer, capable of accurately measuring temperature over the range of 0-50°C (273-323 K) to the nearest ±1°C and referenced to an NIST or ASTM thermometer within ±2°C at least annually.

7.5.1.5 A portable, aneroid barometer (e.g., a climber's or engineer's altimeter) capable of accurately measuring ambient barometric pressure over the range of 500-800 mm Hg to the nearest mm Hg and referenced within ±5 mm Hg to a barometer of known accuracy at least annually.

7.5.1.6 Calibration data sheets or the station log book and 51 mm (2")-wide duct tape.

7.5.1.7 A clean filter.

7.5.2 Multipoint Flow-Rate Calibration Procedure - VFC Sampler. The procedure presented here is basic and intended to be generic, given the assumptions listed in Section 7.5. More detailed calibration procedures, variations, or alternative procedures may be presented in the manufacturer's instruction manual. The manual should be reviewed carefully and that the various calibration variations or alternative procedures be evaluated. In-house equipment and personnel, procedural simplicity and uniformity, and subsequent data applications should be considered in establishing the specific, detailed calibration procedure to be implemented.

[Note: The calibration of some VFC samplers may be affected by changes in line voltage, particularly if the line voltage is below normal (normal is about 115 V). For this reason, VFC samplers should always be calibrated at the monitoring site. Further, if the line voltage at the site is low and likely to fluctuate significantly, a line voltage booster or regulator may be advisable. Also, be sure that replacement blower motors are of the correct type.]

[Note: Do not attempt to calibrate the VFC sampler under windy conditions. Short-term velocity fluctuations will produce variable pressure readings by the orifice transfer standard's manometer. The calibration will be less precise because of the pressure variations.]

7.5.2.1 Set up the calibration system as recommended by the manufacturer. A typical VFC sampler calibration configuration is illustrated in Figure 12. The VFC sampler manufacturer may specify that the sampler be calibrated with a filter installed, which generally precludes calibration flow rates higher than normal operating flow rate. Additional calibration flow rates obtained without a filter may be appropriate, as discussed in Section 7.5.2.8.

7.5.2.2 Install the orifice transfer standard and its adapter faceplate on the sampler. First inspect all gaskets and seals and replace any doubtful ones.

[Note: Tighten the faceplate nuts evenly on alternate corners to properly align and uniformly seat the gaskets. The nuts should be hand-tightened only; too much compression can damage the sealing gasket.]

7.5.2.3 Select a calibration flow rate and install the appropriate resistance plate (or no plate) or adjust the variable resistance valve. At least four flow rates are required to define the calibration relationship. At least three flow rates should be within the acceptable flow-rate range (i.e., 1.02-1.24 m^3/min) for the sampler inlet. For resistance plate orifices, make sure the orifice and resistance plate gaskets are in place and the orifice is not cross-threaded on the faceplate.

7.5.2.4 Leak check the system by blocking the orifice with a large-diameter rubber stopper, wide duct tape, or other suitable means. Seal the pressure port with a rubber cap or similar device. Turn on the sampler. Gently rock the orifice transfer standard and listen for a whistling sound that would indicate a leak in the system. Leaks are usually caused either by a damaged or missing gasket between the orifice transfer standard and the faceplate or by crossthreading of the orifice transfer standard on the faceplate. All leaks must be eliminated before proceeding with the calibration. When the system is determined to be leak-free, turn off the sampler and unblock the orifice.

[Note: Avoid running the sampler for longer than 30 s at a time with the orifice blocked. This precaution will reduce the chance that the motor will be overheated due to the lack of cooling air. Such overheating can shorten the motor's lifetime. It can raise temperatures to the point of defeating the electrical insulation, which could result in fire or electric shock to the user.]

7.5.2.5 Inspect the connecting tubing of the manometers for crimps or cracks. Open the manometer valves (if present) and blow gently through the tubing, watching for the free flow of the fluid.

Adjust the manometers' sliding scales so that their zero lines are at the bottom of the meniscuses. Connect the transfer standard manometer to the transfer standard and the sampler stagnation pressure manometer (or other pressure instrument) to the stagnation pressure port. Ensure that one side of each manometer is open to atmospheric pressure. Make sure the tubing fits snugly on the pressure ports and on the manometers.

7.5.2.6 Read and record the following parameters on the VFC Sampler Data Sheet. An example calibration data sheet for the VFC sampler is illustrated in Figure 13.

- Date, location, and operator's signature.
- Sampler S/N and model.
- Ambient barometric pressure (Pa), mm Hg.
- Ambient temperature (Ta), °C and K (K = °C + 273).
- Orifice S/N and calibration relationship.

[Note: Consistency of temperature and barometric pressure units is required. All temperatures should be expressed in kelvin (K = °C + 273). Also, all barometric pressures should be expressed in mm Hg. Avoid calibrating a HV sampler using one set of units and then performing sampler calculations using another set.]

7.5.2.7 Turn on the sampler and allow it to warm to operating temperature (3-5 min). Read and record the orifice transfer standard's manometer reading, H_2O, and the corresponding sampler relative stagnation pressure manometer reading, Pstg, on the data sheet. (Relative stagnation pressure is a negative pressure [i.e., a vacuum] relative to atmospheric pressure as measured by a manometer with one leg open to the atmosphere.) Be sure to convert the manometer reading to mm Hg using the following equation before recording the reading on the calibration data sheet:

$$\text{mm Hg} = 25.4\ (\text{in. } H_2O/13.6)$$

[Note: The sampler inlet may be partially lowered over the orifice transfer standard to act as a draft shield (if a shield is not otherwise provided). Use a block to provide at least 2" of clearance at the bottom of air flow and for the manometer tubing).]

7.5.2.8 Install the other resistance plates or adjust the variable orifice value to obtain each of the other calibration flow rates and repeat Section 7.5.2.7 for each. At least four calibration flow rates are required with at least three in the acceptable flow-rate range. Difficulties may be encountered in obtaining flow rates in the acceptable range. Even with modified resistance plates (or with no plates) installed, it may be impossible to obtain three acceptable flow rates with a filter mounted on the sampler. Lower flow rate calibration points may be used by extrapolation into the acceptable range without a filter installed in the sampler. If additional calibration points are obtained without a filter, they should be examined carefully to make sure they are consistent with the calibration points obtained with a filter (i.e., they fall on a smooth curve through all the calibration points).

7.5.2.9 Plot the calibration data on a sheet of graph paper as specified in Section 7.5.3.5 of the next section. Repeat Section 7.5.2.7 for any data that are questionable on the plot. Running additional calibration points at differing flow rates or repeating the calibration points at the same flow rates is encouraged to improve the precision of the calibration.

[Note: The data should be plotted in the field as the calibration is occurring, rather than afterwards back at the laboratory.]

7.5.2.10 Turn off the sampler and remove the orifice transfer standard.

7.5.2.11 Install a clean filter on the sampler in the normal sampling mode (use a filter cassette if one is normally used). Turn on the sampler and allow it to warm up to operating temperature.

7.5.2.12 Read the relative stagnation pressure as in Section 7.5.2.7 and record it on the data sheet in the row for the operational flow rate.

7.5.2.13 Perform the calibration calculations presented in the following sections.

7.5.3 Calibration Calculations. Gather together all the calibration data, including the orifice transfer standard's calibration information and the sampler calibration data sheet.

[Note: These calculations should be done at the time of the calibration, rather than later. This approach will allow additional calibration points to be taken if questions arise about the data that have already been obtained.]

7.5.3.1 Verify that the orifice transfer standard calibration relationship is current and traceable to an acceptable primary standard.

7.5.3.2 Calculate the record Qa(orifice) for each calibration point from the orifice calibration information and the equation.

$$Qa(orifice) - \{[\Delta H_2O(T_a/Pa)]^{1/2} - b\} \{l/m\}$$

where:

Qa(orifice) = actual volumetric flow rate as indicated by the transfer standard orifice, m^3/min.
ΔH_2O = pressure drop across the orifice, in. H_2O.
Ta = ambient temperature during use, K (K = °C + 273).
Pa = ambient barometric pressure during use, mm Hg.
b = intercept of the orifice transfer standard's calibration relationship.
m = slope of the orifice transfer standard's calibration relationship.

7.5.3.3 Calculate and record the value of the absolute stagnation pressure ratio, [Pl], for each calibration point:

$$[Pl] = Pa - \Delta Pstg$$

where:

[Pl] = absolute stagnation pressure, mm Hg.
Pa = ambient barometric pressure, mm Hg.
Δ Pstg = relative stagnation pressure, mm Hg.

7.5.3.4 Calculate and record the stagnation pressure ratio:

$$\text{Stagnation pressure ratio} = Pl/Pa$$

7.5.3.5 On a sheet of graph paper, plot the calculated orifice transfer standard's flow rates, Qa(orifice), on the x-axis vs. the corresponding stagnation pressure ratios, Pl/Pa, on the y-axis. Draw a smooth curve through the plotted data. If necessary, extrapolate the curve to include the acceptable flow-rate range.

7.5.3.6 If the sampler manufacturer has provided a factory calibration table (i.e., the lookup table) for the sampler, compare Qa(orifice) for several points on the calibration plot with Qa(sampler) determined from the factory calibration. Calculate the percentage difference between Qa(orifice) and Qa(sampler) using the following equation.

$$\%\ \text{Difference} = \frac{Qa(\text{sampler}) - Qa(\text{orifice})}{Qa(\text{orifice})} = [100]$$

If the agreement is within a few (i.e., 2 or 4) percent, the factory calibration is validated and may be used for sequent sample periods. Proceed to Section 7.5.5.

7.5.3.7 If the agreement is not within a few percentage points, recheck the accuracy of the orifice transfer standard and recheck the calibration procedure. Look for leaks, manometer reading errors, incorrect temperature or pressure data, or miscalculations. Also check for abnormally low line voltage at the site (it should be at least 110 V ac), for the correct blower motor, and for the presence of a gasket between the motor and the choked-flow venturi. A factory calibration is not likely to be substantially incorrect, and any discrepancy of more than a few percent is probably due to some problem with the sampler or with the calibration procedure. However, if no errors or problems with the sampler or with the calibration can be found, or if no factory calibration is provided by the manufacturer, proceed as described in Section 7.5.4.

7.5.4 Generation of Calibration Relationship - VFC Sampler.

7.5.4.1 For each calibration point, calculate and record the quantity,

$$[Pl/Pa)Ta]^{1/2}$$

where:

Pl/Pa = stagnation pressure ratio from the equation in Section 7.5.3.
Ta = ambient temperature during sampler calibration, K (K = °C + 273).

7.5.4.2 For the general linear regression model, y = mx + b, let y = $[(Pl/Pa)Ta]^{1/2}$ and let x = Qa(orifice), such that the model is given by:

$$[(Pl/Pa)Ta]^{1/2} = m[Qa(orifice)] + b$$

Calculate the linear regression slope (m), intercept (b), and correlation coefficient (r).

[Note: Inspect the plotted calibration curve to determine whether any of the calibration points that are substantially outside of the acceptable flow-rate range need to be eliminated so that they do not result in an inappropriate linear regression line.]

7.5.4.3 For subsequent sample periods, the sampler's average actual operating flow rate, Qa, is calculated from the calibration slope and intercept using the following equation.

$$\overline{Qa}(sampler) = \{[\overline{PI}/Pav)Tav]^{1/2} - b\}\ \{l/m\}$$

where:

$\overline{Qa}$(sampler) = the sampler's average actual flow rate, m^3/min.
$\overline{PI}$/Pav = average stagnation pressure ratio for the sampling period.
Tav = average ambient temperature for the sampling period, K (K = °C + 273).
b = intercept of the sampler calibration relationship.
m = slope of the sampler calibration relationship.

[Note: The average value for Pl should be calculated from stagnation pressure measurements taken before and after the sampling period. Pav should be estimated from barometric pressure for the sampling period. See also Section 9.4 for additional information.]

7.5.4.4 If a calibration (Lookup) table is desired, evaluate the above equation for various appropriate values of Pl/Pa and Ta and list the corresponding values of Qa(sampler) in tabular form.

7.5.5 Single-Point Operational Flowrate Ventilation. This procedure compares the VFC sampler's normal operating flow rate to the design flow rate of the inlet (e.g., 1.13 m^3/min).

7.5.5.1 Determine the value of Pl/Pa for the operational flow rate obtained with only the filter cassette installed (Section 7.5.2.11 and Section 7.5.2.12).

7.5.5.2 Determine the new sampler flow rate, Qa(sampler) from the lookup table that corresponds to this value of Pl/Pa. Use the manufacturer's calibration table if it has been validated in 7.5.3.6; otherwise, use the equation in Section 7.5.4.3.

7.5.5.3 Compare Qa(sampler) with the inlet design flow rate (e.g., 1.13 m^3/min) using the following equation:

$$\text{Design flow rate \% difference} = \frac{Qa(sampler) - 1.13}{1.13} \times 100$$

This design flow rate percentage difference <u>must</u> be less than the allowable flow rate tolerance (i.e., ±10, if not otherwise specified by the manufacturer). However, this value <u>should</u> be well within ±7 to allow for some variation with ambient temperature. If this value is not within ±7, recheck the calibration

procedure and data for errors. Check the sampler for leaks, bad motor brushes, missing gaskets, incorrect motor type, or abnormally low line voltage. Because the VFC flow rate is not adjustable, the VFC manufacturer must be consulted to resolve cases of substantially incorrect VFC flow rates.

7.6 Sampler Calibration Frequency

To ensure accurate measurement calibrate HV samplers upon installation and recalibrate as follows:

7.6.1 At least quarterly or annually (see 40 CFR 58, Appendix A for a description of the quality assurance requirements);

7.6.2 After any repairs that might affect sampler calibration (e.g., replacing the motor);

7.6.3 After relocation of the sampler to a different site;

7.6.4 If the results of a field flow-check exceed quality control limits (e.g., greater than ±7% from the sampler's indicated flow rate); or

7.6.5 Whenever a field flow-check or performance audit indicates that the sampler is out (or nearly out) of the acceptable flow-rate range.

[Note: Multipoint flow-rate calibrations should be distinguished from single-point, quality control flow checks (see Section 13). The latter are done more frequently than calibrations and are intended to check if the sampler flow rate, Qa(sampler), or the calibration relationship has changed significantly since the last calibration.]

8. Filters

8.1 Filter Handling

8.1.1 Filter material may be brittle and subject to shearing and breakage. Laboratory and field personnel must be aware of these characteristics and handle sample filters with care.

8.1.2 For convenience, filters can be packed in groups of 50 or less in their original containers or in a box of comparable size. The filters should be separated by a sheet of 8 1/2 x 11" tracing paper. Filter inventory can be controlled by stacking the filters in numerical order so that the operator will use the proper filter first. One side of the shipping box can be cut away to allow the operator to remove the filter easily without damaging the corners.

8.1.3 A filter identification number must be assigned to each filter. Because of difficulty in seeing the "up" side (i.e., the side with the slightly rougher texture) of the filter, consistency in labeling these filters will allow the operator easy access to the filter ID number for documentation and cross-referencing laboratory data forms. This consistency will also eliminate confusion in loading the filter cassettes for subsequent sampling. If the filter ID number is embossed by the operating agency, gentle pressure must be used to avoid filter damage, and extreme care must be taken to avoid duplication or missed numbers.

8.1.4 If samples are to be mailed, the field operator should be supplied with reinforced envelopes and manila folders for protection of the exposed filters during their return to the analytical laboratory. These manila folders may be printed to serve as sample data sheets.

8.2 Visual Filter Inspection

All filters must be visually inspected for defects, and defective filters must be rejected if any are found. Batches of filters containing numerous defects should be returned to the supplier.
The following are specific defects to look for:

- **Pinhole** - a small hole appearing as a distinct and obvious bright point of light when examined over a light table or screen, or as a dark spot when viewed over a black surface.
- **Loose material** - any extra loose material or dirt particles on the filter that must be brushed off before the filter is weighed.
- **Discoloration** - any obvious visible discoloration that might be evidence of a contaminant.
- **Filter nonuniformity** - any obvious visible nonuniformity in the appearance of the filter when viewed over a light table or black surface that might indicate gradations in porosity across the face of the filter.
- **Other** - a filter with any imperfection not described above, such as irregular surfaces or other results of poor workmanship.

9. Sampling Procedure

[Note: This section describes routine operation of a monitoring site using an HV sampler and covers an array of topics, ranging from initial site selection to final data documentation. The procedures herein are intended to serve as guidelines for developing a monitoring program that will accurately reflect trends in local or regional air quality. The effectiveness of the monitoring program depends on responsible day-to-day operation of the monitoring site. The operators who conduct sampling activities offer a unique perspective on the sampler's performance, and their awareness and attention to detail will salvage data that may otherwise be lost. Note, however, that "routine" does not mean "unimportant." The site operator provides cohesiveness in a sampling program.]

9.1 Summary

9.1.1 The PM_{10} sampler can be used in a number of ways. Procedure variations may include the kind of filter medium, the surface area of the filter, prescreening to exclude particles up to a given size, and the manner of placing and exposing the filter during the test. The procedure most commonly used will be described here.

9.1.2 Calibrate the sampler as described in the Section 7. Do not make any change or adjustment on the sampler flow indicator after calibrating. Remove the calibrating orifice. The filters may be packed into a box with sheets of glassine between the filters, or they may be individually packed in self-sealing plastic bags for transportation to the field.

9.1.3 Mount the filter sheet in the filter holder taking care not to lose any of the fiber. Clamp it in place by means provided. Seal into place easier by facing the smooth side into the housing if there is a difference in texture. If the filter holder is separate from the sampler, mount the holder on the intake port, making sure that the coupling gasket is in place and that it is tight.

9.1.4 Place the sampler in the position and location called for in the test, which is with the filter face up, in a horizontal plane, and inside a housing. The dimensions and clearances specified are intended to provide uniformity in sampling practice.

9.1.5 Start the sampler motor and record the time and date. Read the flow-rate indicator and record this reading and the corresponding flow rate as read from the calibration curve. Note also the temperature and barometric pressure. An electric clock should be connected to the same line as the motor so as to detect any loss of test time due to power interruption. A continuous record of the sampling flow rate and sampling time can be obtained by the use of a continuous pressure (or flow rate) recorder.

9.1.6 Allow the sample to run for the specified length of time, which is commonly 24 h, ± 1 h. During this period several readings of flow rate, temperatures, barometric pressure, and time should be taken if this is feasible. A final set of reading is taken at the end of the test period. If only initial and final readings are made, assume that change of readings is linear over the period of test. Intermediate readings will improve the accuracy of volume measurement.

9.1.7 At the end of the sampling period, record all final readings. Remove the filter from the mount very carefully so as not to lose any of the fiber material or collected particulate matter. Fold the filter in half upon itself with the collected material enclosed within. Place the folded filter in a clean tight envelope and mark it for identification. In some applications it may be desirable to place the used filter in a tight metal container to prevent any loss or damage to the filter.

9.1.8 In the laboratory remove the filter from its container. Tap the container and knock any loose fiber or particulate matter onto the inside surface of the folded filter. Examine the inside surface and, with a pair of tweezers, remove any accidental objects such as insects.

9.2 Siting Requirements

9.2.1 As with any type of air monitoring study in which sample data are used to draw conclusions about a general population, the validity of the conclusions depends on the representativeness of the sample data. Therefore, the primary goal of a monitoring project is to select a site or sites where the collected particulate mass is representative of the monitored area.

9.2.2 Basic siting criteria for the placement of high-volume sampler (either TSP or PM_{10}) are documented in Table 1. This list is not a complete listing of siting requirements; instead, an outline to be used by the operating agency to determine a sampler's optimum location. Complete siting criteria are presented in 40 CFR 58, Appendix E.

9.2.3 Additional factors not specified in the Code of Federal Regulations (CFR) must be considered in determining where the sampler will be deployed. These factors include accessibility under all weather conditions, availability of adequate electricity, and security of the monitoring personnel and equipment. The sampler must be situated where the operator can reach it safely despite adverse weather conditions. If the sampler is located on a rooftop, care should be taken that the operator's personal safety is not jeopardized by a slippery roof surface during inclement weather. Consideration also should be given to the fact that routine operation (i.e., calibrations, filter installation and recovery, flow checks, and audits) involves transporting supplies and equipment to and from the monitoring site.

9.2.4 To ensure that adequate power is available, consult the manufacturer's instruction manual for the sampler's minimum voltage and power requirements. Lack of a stable power source can result in the loss of many samples because of power interruptions.

9.2.5 The security of the sampler itself depends mostly on its location. Rooftop sites with locked access and ground-level sites with fences are common. In all cases, the security of the operating personnel as well as the sampler should be considered.

9.3 Sampler Installation Procedures

9.3.1 On receipt of a high-volume sampler (TSP or PM_{10}) from the manufacturer, visually inspect it and account for all components. Compare the equipment delivered with the enclosed packing slip. Notify the manufacturer immediately of any missing or damaged equipment.

9.3.2 Perform a laboratory check to determine if the sampler is operational. Turn on the sampler and observe the vacuum motor performance and shift the recorder response (if so equipped).

9.3.3 Carefully transport the sampler to the field site. If possible, install the sampler in the center of the site platform. This practice will ensure easy access to the sampler's inlet during maintenance procedures and will reduce inlet damage if the sampler should topple over.

9.3.4 Following manufacturer's instructions, carefully assemble the base and inlet of the sampler. The sampler must be bolted down to a secure mounting surface.

9.3.5 Check all tubing and power cords for crimps, cracks, or breaks.

9.3.6 Plug the power cord into a line voltage outlet. If possible, this outlet should be protected by a ground fault interrupter (GFI) for the operator's safety. The use of waterproof interlocking electrical connectors is also recommended to ensure operator safety and to avoid shorts or power interruptions. Do not allow any electrical connections to be submerged during periods of inclement weather.

9.3.7 Turn on the sampler and make sure that it is still working properly. Investigate and correct any malfunctions before proceeding. Operate the sampler for approximately 30 min to ensure that the motor brushes are properly seated and that the motor is operating at full performance.

9.3.8 Perform a multipoint flow-rate calibration, as described in Section 7.

9.4 Sampling Operations

9.4.1 General.

9.4.1.1 Operational procedures will vary according to the sampler model and options (e.g., the types of flow-rate controller and timer) selected for use in the monitoring program. Consult the instrument manual before putting the sampler into operation. Significant differences exist in the field operation of the two types of flow-controlling systems and, hence, in the determination of operational flow rates. The following assumptions are made in this section:

- The flow rate through a sampler that is equipped with a mass-flow controller is indicated by the exit orifice plenum pressure. This pressure is measured with a manometer (or a flow recorder).
- The flow rate through a sampler that is equipped with a volumetric-flow controller is indicated by the stagnation pressure. This pressure is measured with a manometer.
- The sampler has been calibrated according to procedure presented in Section 7.

9.4.1.2 The sampler has been calibrated according to procedures presented in Section 7.

9.4.1.3 The average actual flow rate for MFC samplers is calculated by determining the following:

- The average of the initial and final manometer readings of the exit orifice plenum pressure (or the average flow recorder reading).
- The average ambient temperature (Tav).
- The average ambient barometric pressure (Pav) during the sampling period.

These values are then applied to the sampler's calibration relationship. The 4" pressure flow recorders often supplied with HV samplers generally are not sufficiently accurate and are *not recommended* for quantitative sampler pressure or flow rate measurements. These flow recorders should be used only for nonquantitative determination that the flow was approximately constant and uninterrupted over the

sampling period. The flow recorder may be connected in parallel with the manometer or other pressure measuring device using a tee or "Y" tubing connector.

[Note: Because flow recorders are still widely used for quantitative flow rate measurements, the procedures in this section include specific instructions for the use of a flow recorder. These flow recorder instructions are enclosed in brackets.]

9.4.1.4 The average actual flow rate for VFC samplers is calculated by determining the following:

- The average of the initial and final relative stagnation pressures (Pstg).
- The average ambient temperature (Tav).
- The average barometric pressure (Pav) during the sampling period and then by applying these values to the calibration relationship.

[Note: Consistency of temperature and barometric pressure units is required. All temperatures should be expressed in kelvin (K = °C + 273). Also, all barometric pressures should be expressed in either mm Hg or kPa (but don't mix the two units). Avoid calibrating a PM_{10} sampler using one set of units and then performing sample calculations using another set.]

9.4.2 Presampling Filter Preparation Procedures.

9.4.2.1 Most high-volume samplers (TSP or PM_{10}) have been designed to accept filter cassettes. Loading these cassettes in the laboratory will minimize damage; however, if extreme care is exercised, they can be loaded at the site when ambient conditions permit. Wear protective gloves when handling filters to avoid contaminating the filters with body oils and moisture. Keep the filters in protective folders or boxes. Never bend or fold unexposed filters. The analytical laboratory (and/or filter manufacturer) will give each filter an ID number. Because it is extremely difficult to see the "up" side of a quartz filter (i.e., the side with the slightly rougher texture), the filters should be consistently labeled on one side. When a filter that has been labeled on its "down" side is folded for transport to the laboratory, its sample number will be readily accessible for documentation on laboratory log sheets upon arrival at the laboratory.

9.4.2.2 Following the manufacturer's instructions, carefully load the pre-weighted filter in the filter cassette. The filter should be centered on the wire screen so that the gasket will form an airtight seal on the outer edge of the filter when the faceplate is in place. Poorly aligned filters show uneven white borders after exposure. Care should be taken to ensure that the filter cassette is not excessively tightened, as the filer may stick or the gasket may be permanently damaged. Check that the gasket is in good condition and has not deteriorated.

9.4.3 Sampling Procedures--MFC Sampler.

9.4.3.1 Filter Installation Procedure.

9.4.3.1.1 Following the manufacturer's instructions, loosen the nuts that secure the inlet to the base and gently tilt back the inlet to allow access to the filter support screen.

9.4.3.1.2 Examine the filter support screen. If the screen appears dirty, wipe it clean. If the filter cassette is equipped with a protective cover, remove it and place the loaded cassette in position on the sampler support screen. Tighten the thumb nuts to hold the filter cassette securely. Check that the gasket is in good condition and has not deteriorated.

Caution: Tighten the thumb nuts evenly on alternate corners to properly align and seat the gasket. The nuts should be only hand-tightened because too much compression can damage the sealing gasket.

9.4.3.1.3 If an inlet is being used, lower the sample inlet. Inspect the sample inlet to make sure that it is resting on the filter cassette and not on the sampler's frame. Secure the sample inlet to the sampler base.

9.4.3.1.4 Open the front door of the sample and examine the flow recorder. Remove any moisture inside by wiping it with a clean cloth. Record the sampler S/N, filter ID number, site location, and sampling data on the back of a clean chart and install the chart in the flow recorder.

[Note: Charts used for PM_{10} samplers normally have square-root-function scales; however, linear-function scales may be used. If charts with linear-function scales are used, Equations in Section 7.4.3.3 and Section 7.4.3.5 will have to be modified from their current form by replacing I with $(I)^{1/2}$]

[Note: While installing the chart, do not bend the pen arm beyond its limits of travel. Raise the pen head by pushing on the very top of the pen air (or by using the pen lift). Be sure that the chart tab is centered on the slotted drive to ensure full 360° rotation in 24 h. Make sure that the chart edges are properly located beneath the retainers. Lower the pen arm and tap the recorder face lightly to make certain that the pen is free.]

[Note: During periods of inclement weather, the chart tends to stick to the recorder face. Two charts can be installed simultaneously to enable the sample (top, annotated) chart to rotate freely.]

9.4.3.1.5 Using a coin or slotted screwdriver, advance the chart and check to see that the pen rests on zero--the smallest circle diameter. If necessary, adjust the zero set screw while gently tapping on the side of the flow recorder. If a chart with a linear function scale is used, some positive zero offset may be desirable to allow for normal variation in the zero readings.

9.4.3.1.6 Turn on the sampler and allow it to equilibrate to operating temperature (3-5 min).

9.4.3.1.7 While the sampler is equilibrating, record the following parameters on the MFC Sampler Field Data Sheet (see Figure 14):

- Site Location.
- Sample date.
- Filter ID number.
- Sampler model and S/N.
- Operator's initials.

9.4.3.1.8 Inspect the manometer for crimps or cracks in its connecting tubing. Open the valves and blow gently through the tubing of the manometer while watching for the free flow of the fluid. Adjust the manometer's sliding scale so that its zero line is at the bottom of the meniscuses.

9.4.3.1.9 Measure the initial exit orifice plenum pressure (Pex) using an oil or water manometer, with a 0-200-mm (0-8") range and a minimum scale division of 1 mm (0.1"). Record the initial Pex on the MFC Sampler Field Data Sheet. If Pex is substantially different than for previous samples or otherwise appears abnormal, carry out a Quality Control (QC) flow check as described in Section 13.1.

9.4.3.1.10 Verify that the flow recorder (if used) is operational and that the pen is inking. Note the flow recorder reading. If it is substantially different than for previous samples or otherwise appears abnormal, carry out a QC flow-check as described in Section 13.1.

9.4.3.1.11 Turn the sampler off.

9.4.3.1.12 Check the time indicated by the time-set pointer on the flow recorder. If it is in error, rotate the chart clockwise by inserting a screwdriver or coin in the slotted drive in the center of the chart face until the correct time is indicated.

9.4.3.1.13 Reset the elapsed time meter to 0000 min and the sampler timer for the next run day. Close the sampler door, taking care not to crimp the vacuum tubing or any power cords. The sampler is now ready to sample ambient air.

9.4.3.2 Filter Recovery Procedure. As soon as possible after sampling, the operator should return to the monitoring site to retrieve the exposed filter. Particle loss or filter damage will result if the filter is left in the sampler for extended periods.

9.4.3.2.1 Turn on the sampler and allow it to equilibrate to operating temperature (3-5 min).

9.4.3.2.2 Measure the final Pex and record it on the MFC Sampler Field Data Sheet.

9.4.3.2.3 Turn off the sampler.

9.4.3.2.4 Open the door of the sampler, remove the flow recorder chart, and examine the recorder trace. If the trace indicates extensive flow fluctuations, investigate and correct before the next sampling day.

9.4.3.2.5 Record the following parameters on the MFC Sampler Field Data Sheet:

- Elapsed time of the sampling period, min.
- Average recorder response, arbitrary units.
- Average ambient temperature for the run day (Tav), K (K = °C + 273).
- Average ambient barometric pressure for the run day (Pav), mm Hg or kPa.

[Note: Tav and Pav readings may be recorded or estimated on site or may be obtained from a nearby U.S. National Weather Service Forecast Office or airport weather station. Barometric pressure readings obtained from remote sources must be at station pressure (not corrected to sea level), and they may have to be corrected for differences between the evaluation are not available, seasonal average temperature (Ts) and barometric pressure (Ps) may be substituted for Tav and Pav, respectively. Care must be taken, however, that the actual conditions at the site can be reasonably represented by such averages. Therefore, seasonal values may represent actual values within 20°C and 40 mm Hg.]

The calculations presented in this section assume that the sampler has been calibrated in terms of actual temperature and barometric pressure and that the substitution of seasonal values is used only to determine the sampler's operational flow rate during a sample period. Although additional calculations to convert the sampler's calibration curve to seasonal can be made, the error represented by this method is negligible.

9.4.3.2.6 Calculate and record the average actual flow rate (as determined by the sampler's calibration relationship) on the MFC Sampler Field Data Sheet and on the back of the chart. Attach the chart to the data sheet.

$$Qa = \{[\Delta\ \overline{Pex}(Tav + 30)/Pa]^{1/2} - b\}\ \{l/m\}$$

or for the flow recorder,

$$\overline{Qa} = \{[I\,(Tav + 30)/Pa]^{1/2} - b\}\ \{1/m\}$$

where:

$\overline{Qa}$ = average sampler flow rate, actual m^3/min.
$\overline{Pex}$ = average exit orifice plenum pressure, mm Hg.
I = average flow recorder response, arbitrary units.
Tav = average ambient temperature for the run day, K.
Pav = average ambient pressure for the run day, mm Hg.
b = intercept of the MFC sampler calibration relationship.
m = slope of the MFC sampler calibration relationship.

[Note: If charts with linear-function scales are used, substitute $(I)^{1/2}$ for I.]

9.4.3.2.7 Observe conditions around the monitoring site; note any activities that may affect filter particle loading (e.g., paving, mowing, fire) and record this information on the MFC Sampler Field Data Sheet.

9.4.3.2.8 Raise the sampler inlet and remove the filter cassette. Replace the cassette protective cover (if so equipped). To avoid particle loss, be careful to keep the cassette as level as possible.

9.4.3.2.9 The sampler may now be readied for the next run day.

9.4.3.2.10 Keeping the filter cassette level, carefully transport it, the data sheet, and the flow recorder chart to the laboratory sample custodian.

9.4.4 Sampling Procedures--VFC Sampler.

9.4.4.1 Filter Installation Procedure.

9.4.4.1.1 Following the manufacturer's instructions, loosen the nuts that secure the inlet to the base and gently tilt back the inlet to allow access to the filter support screen.

9.4.4.1.2 Examine the filter support screen. If the screen appears dirty, wipe it clean. If the filter cassette is equipped with a protective cover, remove it and place the loaded cassette in position on the sampler support screen. Tighten the thumb nuts sufficiently to hold the filter cassette securely. Check that the gasket is in good condition and has not deteriorated.

Caution: Tighten the thumb nuts evenly on alternate corners to properly align and seat the gasket. The nuts should be only hand-tightened because too much compression can damage the sealing gasket.

9.4.4.1.3 If an inlet is used, lower the sample inlet and secure it to the sampler base. For impaction inlets, inspect the sample inlet to make sure that it is resting on the filter cassette and not on the sampler's frame. Secure the sampler inlet to the sampler base.

9.4.4.1.4 Record the following parameters on the VFC Sampler Field Data Sheet (see Figure 15):

- Site location.
- Sample date.
- Filter ID number.
- Sampler model and S/N.
- Operator's initials.

9.4.4.1.5 Turn on the sampler and allow it to reach a stable operating temperature (3-5 min).

9.4.4.1.6 Bring an oil or water manometer to the side of the sampler. This manometer should have a range of 0-400 mm (0-16") and a minimum scale division of 1 mm (0.1").

[Note: Be sure to convert the manometer reading to mm Hg using the following equation before recording the reading on the VFC Sampler Field Data Sheet.]

$$\text{mm Hg} = (25.4)\ (\text{in. } H_2O/13.6)$$

Inspect the manometer for crimps or cracks in its connecting tubing. Open the valves and blow gently through the tubing of the manometer, while watching for the free flow of the fluid.
Adjust the manometer's sliding scale so that its zero line is at the bottom of the meniscuses.

9.4.4.1.7 Remove the vacuum cap from the stagnation pressure port located on the side of the sampler base. Using the connecting tubing, attach one side of the manometer to the port. Leave the other side of the manometer open to atmospheric pressure. Make sure the tubing snugly fits the port and the manometer.

9.4.4.1.8 Measure the initial relative stagnation pressure (Δ Pstg) and record this reading on the VFC Sampler Field Data Sheet.

9.4.4.1.9 Turn off the sampler, disconnect the manometer, and replace the vacuum cap on the stagnation pressure port.

9.4.4.1.10 Reset the elapsed-time meter to 0000 min and the sampler timer for the next run day. The sampler is now ready to sample ambient air.

9.4.4.2 Filter Recovery Procedure. As soon as possible after sampling, the operator should return to the monitoring site to retrieve the exposed filter. Particle loss or filter damage will result if the filter is left in the sampler for extended periods.

9.4.4.2.1 Turn on the sampler and allow it to warm up to operating temperature (3-5 min).

9.4.4.2.2 While the sampler is equilibrating, record the following parameters on the VFC Sampler Field Data Sheet:

- Elapsed time of the sampling period, min.
- Average ambient temperature for the run day (Tav), °C and K.
- Average ambient barometric pressure for the run day (Pav), mm Hg.

[Note: Tav and Pav readings may be recorded or estimated on site or may be obtained from a nearby U.S. National Weather Service Forecast Office, National Weather Service (NWS) station, or an airport weather station. Barometric pressure readings obtained from remote sources must be at station pressure (not corrected to sea level), and they may have to be corrected for differences between the elevation of the monitoring site and that of the airport. If Tav and Pav readings are not available, seasonal average temperature (Ts) and barometric pressure (Ps) can be substituted. Care must be taken, however, that the actual conditions at the site can be reasonably represented by such averages. Therefore, seasonal values may represent actual values within 20°C and 40 mm Hg.]

9.4.4.2.3 Inspect the manometer for crimps or cracks in its connecting tubing. Open the valves and blow gently through the tubing of the manometer, while watching for the free flow of the fluid. Adjust the manometer sliding scale so that its zero line is at the bottom of the meniscuses.

9.4.4.2.4 Remove the vacuum cap from the stagnation pressure port located on the side of the sampler base. Using the connecting tubing, attached one side of the manometer to the port. Make sure that the tubing snugly fits the port and the manometer. Leave the other side open to atmospheric pressure.

9.4.4.2.5 Record the final Pstg on the VFC Sampler Field Data Sheet. Turn off the sampler and replace the vacuum cap.

[Note: Be sure to convert the manometer reading to mm Hg using the following equation before recording the reading on the Sampler Field Data Sheet.]

$$\text{mm Hg} = 25.4\ (\text{in. } H_2O/13.6)$$

9.4.4.2.6 Calculate the average relative stagnation pressure ($\overline{\Delta Pstg}$) and record it on the data sheet.

9.4.4.2.7 Calculate the average absolute stagnation pressure ($\overline{PI}$) for the sample run day and record it on the data sheet.

$$\overline{PI} = Pav - \overline{\Delta Pstg}$$

where:

$\overline{PI}$ = average absolute stagnation pressure, mm Hg.
Pav = average ambient barometric pressure for the run day (not the retrieval day), mm Hg.
$\overline{\Delta Pstg}$ = average stagnation pressure drop, mm Hg.

9.4.4.2.8 Calculate and record the average stagnation pressure ratio:

$$\text{Average stagnation pressure ratio} = P1/Pav$$

where:

Pl = average absolute stagnation pressure, mm Hg.
Pav = average ambient barometric pressure on the sample run day, mm Hg.

9.4.4.2.9 Using the manufacturer's lookup table (or an alternate calibration relationship as described in Section 7.5.4), locate the column and row corresponding to $\overline{PI}$/Pav and the Tav value for the sample run day. Read and record the indicated $\overline{Qa}$ value.

9.4.4.2.10 Observe conditions around the monitoring site; note any activities that may affect filter particle loading (paving, mowing, fire) and record this information on the VFC Sampler Field Data Sheet.

9.4.4.2.11 Raise the sampler inlet and remove the filter cassette. Replace the cassette protective cover (if so equipped). To avoid particle loss, be careful to keep the cassette as level as possible.

9.4.4.2.12 The sampler may now be readied for the next sampling period.

9.4.4.2.13 Keeping the filter cassette level, carefully transport it and the Sampler Field Data Sheet to the laboratory sample custodian.

9.4.5 Post-Sampling Filter Handling Procedures. If a sample will not be analyzed immediately, the sample custodian should store the filer within a protective covering. Because filter cassettes often prove too expensive and unwieldy for storage purposes, the use of a manila folder and a protective envelope of comparable size to that of the filter is recommended. Laboratory personnel should adhere to the following procedure:

9.4.5.1 Following the manufacturer's instructions, remove the top frame of the filter cassette.

9.4.5.2 Conduct a secondary check of a sample's validity as presented in "Laboratory Validation Criteria" (see Section 9.5).

9.4.5.3 Carefully slip a manila folder underneath the edge of the exposed filter. The filter may stick in the cassette because of overcompression of the filter cassette gasket. Be extremely careful to avoid damage to the brittle quartz filter.

9.4.5.4 Center the filter on the folder. If the filter must be touched, do not touch or jar the deposit. Fold the manila folder lengthwise at the middle with the exposed side of the filter in. If the collected sample is not centered on the filter (i.e., the unexposed border is not uniform around the filter), fold it so that only deposit touches deposit. **Do not crease the folder**--the sample filter may tear. If the filter shears or breaks, ensure that all pieces of the filter are included within the folder.

9.4.5.5 Insert the folder into the protective envelope.

9.4.5.6 Deliver the filter in its protective folder and envelope, accompanied by the completed data sheet, to the analytical laboratory.

9.5 Sample Validation and Documentation

9.5.1 Field Validation Criteria. After each sampling period, calculate the percentage difference between Qa and the design flow rate (1.13 m^3/min) using the following formula:

$$\% \text{ Difference} = 100 \frac{\overline{Qa} - 1.13}{1.13}$$

Record this value on a control chart for the field validation of the sampler's actual volumetric flow rate as is shown in Figure 16.

- Decreases in flow rate during sampling (due to mechanical problems) of more than 10% from the initial set point result in sample invalidation. Recalibrate the sampler. A sample flow rate may also fluctuate due to heavy filter loading. If a high concentration is suspected, the operator should indicate this on the field data sheet. The laboratory supervisor will make the final decision regarding the sample's validity.
- Changes in flow-rate calibration of more than 10%, as determined by a field QC flow-rate check (see Section 13), will invalidate all samples collected back to the last calibration or valid flow check. Recalibrate the sample.

9.5.2 Laboratory Validation Criteria.

9.5.2.1 Check the filter for signs of air leakage. Leakage may result from a worn or improperly installed faceplate gasket. A gasket generally deteriorates slowly. The sample custodian should be able to decide well in advance (by the increased fuzziness of the sample outline) when to change the gasket before total gasket failure results. If signs of leakage are observed, void the sample, determine the cause, and instruct the operator to take corrective actions before starting another sampling period.

9.5.2.2 Check the exposed filter for physical damage that may have occurred during or after sampling. Physical damage after sampling would not invalidate the sample if all pieces of the filter were put in the folder; however, complete losses of loose particulate after sampling (e.g., loss when folding the filter) would void the sample. Mark such samples as "void" on the HV data sheet.

9.5.2.3 Check the appearance of the particles. Any changes from normal color may indicate new emission sources or construction activity in the area. Note any change on the data sheet.

9.5.3 Data Documentation. Recordkeeping is a critical part of the QA program. Careful documentation of sampling data will salvage samples that may otherwise be lost. The sheer repetition of recording data may result in errors; however, this cross-referencing between data sheets, log books, and (for those samplers so equipped) the continuous-flowrecorder charts will allow the operator to pinpoint discrepancies that may result in a sample's invalidation.

[Note: The use of log books at monitoring sites is highly encouraged.]

9.5.3.1 Presampling Documentation and Inspection. The following information should be recorded on the Sampler Field Data Sheet (SFDS), sampler recorder chart (RC), flow-rate control chart (CC), and in the site log book (LB):

- Site Location.
- Sample Date.
- Filter ID number.
- Sample model and S/N.
- Operator's initials.

9.5.3.2 Post-Sampling Documentation and Inspection. Upon receipt of exposed filters from the field, the sample custodian should adhere to the following procedures.

9.5.3.2.1 Examine the field data sheet. Determine whether all data needed to verify sample validity and to calculate mass concentration are provided (e.g., average flow rate, ambient temperature, barometric pressure, and elapsed time). Void the sample if data are missing or unobtainable from a field operator or if a sampler malfunction is evident.

9.5.3.2.2 If the exposed filter was packaged for shipment, remove the filter from its protective envelope and examine the shipping envelope. If sample material has been dislodged from a filter, recover as much as possible by brushing it from the envelope onto the deposit on the filter with a soft camel's-hair brush.

9.5.3.2.3 Match the filter ID number with the correct laboratory data/coding form on which the original balance ID number, filter ID number, filter tare weight, and other information are inscribed. The sample custodian should group filters according to their recorded balance ID numbers. Initial separation of filters by balance ID number will decrease the probability of a balance error that could result from the use of different balances for tare and gross weights.

9.5.3.2.4 Remove the filter from the protective manila folder. Should the filter be retained in its filter cassette, loosen the nuts on the top and remove the filter. Overtightening the nuts may cause the filter to adhere to the cassette gasket. Gently remove it by the extreme corners to avoid damage. Inspect the filters for any damage that may have occurred during sampling. Conduct a secondary check of a sample's validity (as presented in Section 9.4). If insects are embedded in the sample deposit, remove them with Teflon®-tipped tweezers and disturb as little of the sample deposit as possible. If more than 10 insects are observed, refer the sample to the supervisor for a decision on acceptance or rejection of the filter for analysis.

9.5.3.2.5 Place defect-free filters in protective envelopes and forward them to the laboratory for weighing and analysis. File the data sheets for subsequent mass concentration calculations.

9.5.3.2.6 Place defective filters, with the type of defect(s) listed, in separate clean envelopes. Label the envelopes and submit them to the laboratory supervisor for final approval of filter validity.

10. Interferences

10.1 Large extraneous objects, such as insects, may be swept into the filter.

10.2 Liquid aerosols, such as oil mists and fog droplets, are retained by the filter. If the amount of liquid so collected is sizeable, the filter can become wet and its function may be impaired.

10.3 Any gaseous or vaporous constituent of the atmosphere under test that is reactive with or absorbed on the filter will be retained.

10.4 As the filter becomes loaded with collected matter, the sampling rate is reduced. If a significant drop in flow rate occurs, the average of the initial and final flow rate will not give an accurate estimate of total flow during the sampling period. The magnitude of such errors will depend on the amount of reduction of airflow rate and on the variation of the mass concentration of dust with time during the 24-h sampling period. As an approximate guideline, any sample should be suspect if the final flow rate is less than one-half the initial rate.

10.5 Power failure or voltage change during the test period will lead to an error, depending on the extent and time duration of such failure.

10.6 The passive loading of the filter left in place for any time prior to or following a sampling period can introduce an error. The timely installation and removal of the filter is advisable, or a sampler with shutters may be used.

10.7 If two or more samplers are used at a given location, they should be placed at least 2 meters apart so that one sampler will not affect the results of an adjacent sampler.

10.8 Recent wind tunnel studies have shown significant possible sampling errors as a function of sampler orientation in atmospheres containing high relative concentrations of large particles.

10.9 Metal dusts from motors, especially copper, may significantly contaminant samples under some conditions.

10.10 Under some conditions, atmospheric SO_2 and NO_x may interfere. Artifact formation errors are caused by the retention of sulfur dioxide in the form of sulfate particulate on alkaline filters. Experiments involving a variety of filters indicate that sulfate loading errors of 0.3-3.0 $\mu g/m^3$ can be expected with the use of common glass fiber filters under normal sampling conditions and that larger sulfate errors are possible under extreme sampling conditions. A neutral or low-alkalinity filter medium will eliminate excessive artifact formation.

10.11 Guidelines to help prevent post-sampling particle loss are presented in Section 8.

11. Calculations, Validations, and Reporting of TSP and PM_{10} Data

11.1 Basic Information Used for Calculations

11.1.1 The design flow rate is specified as an actual volumetric flow rate (Qa), measured at existing conditions of temperature (Ta) and pressure (Pa). The sampler's operational flow rate should be very close to the design flow rate. All samplers have some means for measuring the operational flow rate, and that flow rate measurement system must be calibrated periodically with a certified flow rate transfer standard. Usually, measurements (or estimates) of ambient temperature and barometric pressure are required to get an accurate indication of the operational flow rate. To determine the average sampler

flow rate over a sample period, use the average temperature (Tav) and average barometric pressure (Pav) over the sample period. However, if average temperature and pressure values (or reasonable estimates) cannot be obtained for each sample period, seasonal average temperature (Ts) and barometric pressure (Ps) for the site may be substituted.

[Note: Tav and Pav readings may be recorded on site or estimated from data obtained from a nearby U.S. National Weather Service Forecast Office, NWS station, or local airport weather station. Barometric pressure readings obtained from airports or other sources must be at station pressure (i.e., not corrected to sea level), and they may have to be corrected for differences between the elevation of the monitoring site and that of the airport. If individual Tav and Pav readings cannot be obtained for each sample period and seasonal averages for the site are routinely substituted, care must be taken to ensure that the actual temperature and barometric pressure at the site are reasonably represented by such averages. Therefore, seasonal average temperature and pressure values (Ts and Ps) for the site by should be used only when these values are within 20 K and 40 mm Hg (5 kPa) of the actual average temperature and barometric pressure (Tav and Pav) for the sample period.]

11.1.2 The calculations presented in this section assume that the sampler has been calibrated in actual volumetric flow rate units (Qa) and that individual average temperature and barometric pressure values are used for each sample period. If seasonal average temperature and pressure values for the site are to be used, Ts may be substituted for Tav, and Ps may be substituted for.

11.1.3 The true or actual flow rate through the sampler inlet must be known and controlled. A common source or error in a monitoring program is confusion of various air volume flow-rate measurement units. Although the sampler's operational flow rate must be monitored in terms of actual volume flow rate units (Qa), sampler flow rates can be corrected to standard volume flow rate units (Qstd) at EPA standard conditions of temperature (25°C) and pressure (760 mmHg).

- $\overline{Qa}$: Actual volumetric air flow rates, measured and expressed at existing conditions of temperature and pressure and denoted by Qa (Qactual). Typical units are L/min and m^3/min. Inlet design flow rates for PM_{10} samplers are always given in actual volumetric flow rate units.
- Qstd: Airflow rates that have been corrected to equivalent standard volume flow rates at EPA standard conditions of temperature and pressure (25°C or 298 K and 760 mm Hg or 101 kPa) and denoted by Qstd (Qstandard). Typical units are std. L/min, and std. m^3/min. Standard volume flow-rate units are often used by engineers and scientists because they are equivalent to mass flow units.

11.1.4 The Qa and Qstd measurement units must not be confused or interchanged. The flow-rate units can be converted as follows, provided the existing temperature and pressure (or in some cases the average temperature and pressure over a sampling period) are known:

$$\overline{Qstd} = \overline{Qa}(Pa/Pstd)(Tstd/Ta)$$
$$Qstd = (Pav/Pstd)(Tstd/Tav)$$
$$Qa = Qstd(Pstd/Pa)(Ta/Tstd)$$

where:

Qstd = standard volume flow rate, std m^3/min.
Qa = actual volume flow rate, actual m^3/min.

Pa = ambient barometric pressure, mm Hg.
Pstd = EPA standard barometric pressure, 760 mm Hg.
Tstd = EPA standard temperature, 298 K.
Ta = standard temperature, K (K = °C + 273).
Qstd = average standard volume flow rate for the sample period, std. m^3/min.
$\overline{Qa}$ = average actual volume flow rate for the sample period, m^3/min.
Pav = average ambient barometric pressure during the sample period, mm Hg.
Tav = average ambient temperature during the sample period, K.

Inorganic Compendium Method IO-2.4 provides guidance on calculating sample volume corrected to EPA standard temperature and pressure.

11.2 Flow-Rate Calculations. Because flow control methods (and hence, calibration procedures) vary among different sampler models, the calculations necessary to determine the average actual flow rate during a sample run will also differ. The following general procedures are recommended for calculating the average ambient flow rate of the sampler. In this section, it is assumed that the samplers have been calibrated according to procedures outlined in Section 7.

[Note: Consistency in units is required. Adoption of uniform designations of K for temperature and mm Hg (or kPa) for pressure is recommended in all calculations.]

11.2.1 MFC Sampler.

11.2.1.1 The average actual flow rate for sample period is calculated by determining:

- The average of the initial and final manometer readings ($\overline{\Delta Pex}$) [or the average flow recorder trace];
- The average ambient temperature (Tav); and
- The average ambient barometric pressure (Pav) during the sampling period and applying these values to the calibration relationship.

11.2.1.2 Each sampler's flow measurement system should be calibrated periodically, and the calibration should be described by a mathematical expression (e.g., a least-squares linear regression equation) that indicates the slope and intercept of the calibration relationship. Following the procedure in Section 7, this expression is in the form of:

$$\overline{Qa} = \{[\overline{Pex}(Tav + 30)/Pav)]^{1/2} - b\}\ \{l/m\}$$

where:

$\overline{Qa}$ = the sampler's average actual flow rate for the sample period, m^3/min.
$\overline{Pex}$ = average of initial and final sampler manometer readings, $(\Delta Pex_i + \Delta Pex_i)/2$, in. H_2O.
Tav = average barometric pressure for the sample period, K (K = °C + 273).
Pav = average barometric pressure for the sample period, mm Hg.
b = intercept of the sampler calibration relationship.
m = slope of the sampler calibration relationship.

For the flow recorder,

$$\overline{Qa} = \{[I\,(Tav+30)/Pav]^{1/2} - b\}\ \{l/m\}$$

where:

I = average flow recorder reading for the sample period.

11.2.1.3 The average actual flow rate is then corrected to EPA-standard conditions, calculated as:

$$\overline{Qstd} = \overline{Qa}(Pav/Pstd)(Tstd/Tav)$$

where:

$\overline{Qstd}$ = average sampler flow rate corrected to EPA-standard volume flow rate units, std. m^3/min.
$\overline{Qa}$ = average actual sampler flow rate for the sample period, m^3/min.
Pstd = standard barometric pressure, 760 mm Hg.
Tstd = standard temperature, 288 K.

11.2.2 VFC Sampler.

11.2.2.1 The average actual flow rate for the sample period is calculated by determining the ratio of the average absolute stagnation pressure of the average ambient barometric pressure ($\overline{PI}$/Pav) and the ambient average temperature (Tav) for the sampler period.

11.2.2.2 Calculate the value of PI in mm Hg:

$$\overline{PI} = Pav - \overline{\Delta Pstg}$$

where:

PI = average absolute stagnation pressure for the sample period, mm Hg .
Pav = average barometric pressure for the sample period, mm Hg.
$\overline{\Delta Pstg}$ = average of initial and final relative stagnation pressure readings, mm Hg.

[Note: Be sure to convert a water manometer reading to mm Hg using the following equation before recording the reading on the data sheet:]

$$mmHg = 25.4\ (\Delta\ H_2O/13.6)$$

11.2.2.3 Calculate and record the value of the average stagnation pressure ratio.

$$\text{Average stagnation pressure ratio} = (\overline{PI}/Pav)$$

11.2.2.4 Use the manufacturer's lookup table (or alternate calibration relationship; see Section 7) to determine Qa from the average stagnation pressure ratio ($\overline{PI}$/Pav) and Tav for the sample period. The value of $\overline{Qa}$ is the average volumetric flow rate for the sampler period.

11.2.2.5 The average actual flow rate is then corrected to EPA-standard conditions using the following equation:

$$\overline{Qstd} = \overline{Qa}(Pav/Pstd)(Tstd/Tav)$$

where:

$\overline{Qstd}$ = average sampler flow rate corrected to EPA-standard volume flow rate units, std. m^3/min.
$\overline{Qa}$ = average actual sampler flow rate for the sample period, m^3/min.
Pstd = standard barometric pressure, 760 mm Hg.
Tstd = standard temperature, 298 K.

11.3 The total standard volume of air sampled is calculated by the following equation:

$$Vstd = (\overline{Qstd})(t)$$

where:

Vstd = total volume of air sampled in standard volume units, std m^3.
$\overline{Qstd}$ = average sampler flow rate corrected to EPA-standard conditions, std m^3/min.
t = total elapsed sampling time, min.

11.4 Percent Difference

11.4.1 After each sampling period, calculate the percentage difference between Qa and the design flow rate (1.13 m^3/min) using the following formula:

$$\% \text{ Difference} = 100 \frac{Qa - 1.13}{1.13}$$

Record this value on a control chart for the field validation of the sampler's actual volumetric flow rate as is shown in Figure 14.

11.4.2 The following criteria should be used as the basis for determining a sample's validity:

- Decreases in flow rate during sampling (due to mechanical problems) of more than 10% from the initial set point cause sample invalidation. A sample flow rate may also fluctuate due to heavy filter loading. If a high concentration is suspected, the operator should indicate it on the field data sheet. The laboratory supervisor will make the final decision regarding the sample's validity.
- Changes in flow-rate calibration of more than 10%, as determined by a field QC flow-rate check, will invalidate all samples collected back to the last calibration or valid flow check.

12. Records

12.1 MFC Sampler

Record the following parameters on the MFC Sampler Field Data Sheet (see Figure 14):

- Final Pex.
- Elapsed time of the sampling period, min.
- Average record response, arbitrary units.
- Tav for the run day K (K = °C + 273).
- Pav for the run day, mm Hg.

12.2 VFC Sampler

Record the following parameters on the VFC Sampler Field Data Sheet (see Figure 15):

- Site location.
- Sample date.
- Filter ID number.
- Sampler model and S/N
- Operator's initials.
- Initial Relative Stagnation Pressure (Pstg).
- Elapsed time of the sampling period, min.
- Tav for the run day Tav, °C and K.
- Pav for the run day Pav, mm Hg.
- Pstg, mm Hg.
- Relative Stagnation Pressure.
- Absolute Stagnation Pressure.
- Qa value (from chart generated in Section 7.5.4.).

12.3 Tav and Pav readings may be recorded or estimated on site or may be obtained from a nearby U.S. National Weather Service Forecast Office or airport weather station. Barometric pressure readings obtained from remote sources must be at station pressure (not corrected to sea level); they may have to be corrected for differences between elevation of the monitoring site and that of the airport. If Tav and Pav readings are not available, seasonal average temperature (Ts) and barometric pressure (Ps) may be substituted for Tav and Pav, respectively. Care must be taken, however, that the actual conditions at the site can be reasonably represented by such averages. Therefore, seasonal values should represent actual values within 20°C and 40 mm Hg.

12.4 Observe conditions around the monitoring site; note any activities that may affect filter particle loading (paving, mowing, fire) and record this information on the VFC Sampler Field Data Sheet. Document any factors that may cause a sample's invalidation on the sample data sheet. Forward the data sheet and the filter to the laboratory supervisor, who will make the final decision regarding the sample's validity.

12.5 Record the percentage difference between Qa and the design flow rate on Figure 16.

12.6 Recordkeeping is a critical part of the QA program. Careful documentation of sampling data will salvage samples that may otherwise be lost. The sheer repetition of recording data may result in errors; however, this cross-referencing between data sheets, log books, and (for those samplers so equipped) the continuous-flow-recorder charts will allow the operator to pinpoint discrepancies that may result in a sample's invalidation.

[Note: The use of log books at monitoring sites is highly encouraged. The following information should be recorded on the Sampler Field Data Sheet (SFDS), sampler recorder chart (RC), in the site log book (LB), and on the flow-rate control chart (CC).]

12.6.1 The following information should be recorded by the operator who starts the sample. (The designation in parentheses indicates where the data must be inscribed):

- Site designation and locations (SFDS)(RC)(LB). This information should be recorded in the log book only once, at the initiation of a monitoring program.
- Sampler model and S/N (SFDS)(RC)(LB). This information needs to be recorded in the log book only at the commencement of monitoring, unless there is more than one sampler or a new sampler has been deployed.
- Filter ID number (SFDS)(RC)(LB).
- Sample date (SFDS)(RC)(LB).
- Initial Pex for MFC or initial Δ Pstg for VFC (SFDS)(LB).
- Unusual conditions that may affect the results (e.g., subjective evaluation of pollution that day, construction activity, weather conditions) (SFDS)(LB).
- Operator's initials (SFDS).
- Signature (LB).

12.6.2 The following information should be recorded by the operator who removes the samples.

- Elapsed time of the sample run (SFDS)(RC)(LB).
- Final Δ Pex [or mean I] for MFC or final Δ Pstg, $\overline{PI}$, and $\overline{PI}$/Pav for VFC (DS)(LB)[RC].
- The calculated standard average flow rate (Qstd) in std m^3/min (SFDS)(LB).
- The percentage difference between the actual and design flow rates (CC).
- Average ambient temperature and barometric pressure on the sample run day (SFDS)(LB).
- Seasonal average temperature and pressure, if needed (SFDS/LB). This information needs to be recorded in the logbook once, at the change of each season.
- Existing conditions that may affect the results (SFDS)(LB).
- Explanations for voided or questionable samples (SFDS)(LB).
- Operator's initials (SFDS).
- Signature (LB).

13. Field QC Procedure

For HV samplers, a field-calibration check of the operational flow rate is recommended at least once per month. The purpose of this check is to track the sampler's calibration stability. A control chart (e.g., Figure 14) that contains the percentage difference between a sampler's indicated and measured flow rates should be maintained. This chart is a quick reference of instrument flow-rate drift problems and is useful for tracking the performance of the sampler. Either the sampler log book or a data sheet must be used to document flow-check information. This information includes, but is not limited to, instrument and transfer standard model and serial numbers, ambient temperature and pressure conditions, and collected flow-check data.

In this section, the following is assumed:

- The flow rate through sampler that is equipped with a mass-flow controller is indicated by the exit orifice plenum pressure. This pressure is measured with a manometer [or a flow recorder].
- The flow rate through a sampler that is equipped with a volumetric flow controller is indicated by the stagnation pressure. This pressure is measured with a manometer.
- The acceptable flow-rate fluctuation range is 10% of the design flow rate.
- The transfer standard will be an orifice device equipped with a water or oil manometer.
- The orifice transfer standard's calibration relationship is in terms of the actual volumetric flow rate (Qa).

13.1 QC Flow-Check Procedure--MFC Sampler. The indicated flow rate (Qa (sampler)) for MFC samplers is calculated by determining:

- The manometer reading of the exit orifice plenum pressure [or the flow recorder reading],
- The ambient temperature (Ta), and
- The barometric pressure (Pa) during the flow check.

These values are then applied to the sampler's calibration relationship. The 4" pressure (flow) recorders of the type often supplied with high-volume PM_{10} samplers are generally not sufficiently accurate and are not recommended for quantitative sampler pressure or flow measurements. The flow recorder may be connected in parallel with the manometer or other pressure measuring device, using a tee or "Y" tubing connector. An alternate QC flow-check procedure may be presented in the manufacturer's instruction manual. The manual should be reviewed and the various methods evaluated. Inhouse equipment and procedural simplicity should be considered in determining which method to use.

[Note: Do not attempt to conduct a flow check of samplers under windy conditions. Short-term wind velocity fluctuations will produce variable pressure readings by the orifice transfer standard's manometer. The flow check will be less precise because of the pressure variations.]

13.1.1 Collect the following equipment and transport it to the monitoring station:

[Note: An independent person should perform the QC flow check, with an outside observer present.]

- A water, oil, or digital manometer with a 0-200 mm (0-8") range and a minimum scale division of 1 mm (0.1") for measuring the sampler's exit orifice plenum pressure. This manometer should be the same as is used routinely for sampler flow rate measurements.
- An orifice transfer standard and its calibration relationship (different from initial orifice standard).
- An associated water or oil manometer with a 0- to 400-mm (0- to 16") range and a minimum scale division of 1 mm (0.1") for measuring the orifice transfer standard.
- A thermometer capable of accurately measuring temperature 0-50°C (273-323 K) to the nearest ±1°C and referenced to an NIST or ASTM thermometer within ±2°C at least annually.
- A portable aneroid barometer (e.g., a climber's or engineer's altimeter) capable of accurately measuring ambient pressure 500-800 mm Hg (66-106 kPa) to the nearest millimeter Hg and referenced within ±5 mm Hg of a barometer of known accuracy at least annually.
- The sampler's calibration information.
- Spare recorder charts and a clean flow-check filter.
- MFC Sampler Flow-Check Data Sheet or site log book.

13.1.2 Record the site location, sampler S/N, and date on the back of a clean chart and install it in the flow recorder. While installing the chart, do not bend the pen arm beyond its limits of travel. Raise the pen head by pushing on the very top of the pen arm (or by using the pen lift) and simultaneously insert the chart.

13.1.3 Lower the pen arm and tap the recorder face lightly to make certain that the pen can move freely.

13.1.4 Using a coin or slotted screwdriver, advance the chart and check to see that the pen head rests on zero (i.e., that smallest diameter circle). If necessary, adjust the zeroset screw while gently tapping on the side of the recorder. A quarter turn of the set screw usually results in large offsets; adjust the set screw carefully.

13.1.5 Set up the flow-check system as previously illustrated in Figure 10. MFC samplers are normally flow-checked with a filter in line (i.e., between the orifice transfer standard and the motor). Install a clean filter in the sampler. Place the filter directly upon the sampler's filter screen. Do not use a filter cassette. A flow-check filter should never be used for subsequent sampling because particles larger than 10 μm can be collected on the filter while the inlet is raised. The sample mass will be biased as a result of using a filter for both a flow check and subsequent sampling.

13.1.6 Install the orifice transfer standard and its faceplate on the sampler. Do not restrict the flow rate through the orifice (i.e., by using fixed resistance plates or closing the variable-resistance valve). *Caution: Tighten the faceplate nuts on alternate corners first to eliminate leaks and to ensure even tightening. The nuts should be hand-tightened; too much compression can damage the sealing gasket.* Make sure the orifice transfer standard gasket is in place and the orifice transfer standard is not cross-threaded on the faceplate.

13.1.7 Connect the orifice manometer to the pressure port of the orifice transfer standard and the sampler manometer to the sampler's exit orifice plenum. Inspect the manometers' connecting tubings for crimps and cracks. Open the manometer valves and blow gently through the tubings. Watch for the free flow of fluid. Adjust the manometers' scales so that their zero lines are at the bottom of the meniscuses. Make sure that the connecting tubing snugly fits the manometer and the pressure port.

13.1.8 Turn on the sampler and allow it to warm up to operating temperature (3-5 min).

[Note: The sampler inlet may be partially lowered over the orifice transfer standard to act as a draft shield (if a shield is not otherwise provided). Use a block to provide at least 2" of clearance at the bottom for air flow and for the manometer tubing.]

13.1.9 Read and record the following parameters on the MFC Sampler Flow-Check Data Sheet:

- Sampler location and date.
- Sampler model and S/N.
- Ambient temperature (Ta), °C and K.
- Ambient barometric pressure (Pa), mm Hg.
- Unusual weather conditions.
- Orifice transfer standard S/N and calibration relationship.
- Operator's signature.

13.1.10 Observe the ΔH_2O across the orifice by reading the manometer deflection. Record the manometer deflection on the MFC Sampler Flow-Check Data Sheet (see Figure 11).

13.1.11 Measure the exit orifice plenum pressure (Δ Pex) by reading the manometer deflection. Record the manometer deflection on the MFC Sampler Flow-Check Data Sheet.

13.1.12 Using a coin or small screwdriver, advance the recorder chart to read the sampler's corresponding response (I) and record on the data sheet. A gentle tap on the recorder face is often necessary to ensure that the pen is not sticking to the chart.

13.1.13 Turn off the sampler and remove the orifice transfer standard, but not the filter. Turn on the sampler and repeat Section 13.1.11 [or Section 13.1.12] to check the flow rate under normal operating conditions. Turn off the sampler and remove the filter.

13.1.14 Calculate and record Qa(orifice) at actual conditions using the following equation:

$$Qa(orifice) = \{[(\Delta H_2O)(Ta/Pa)]^{1/2} - b\} \{l/m\}$$

where:

Qa(orifice) = actual volumetric flow rate as indicated by the orifice transfer standard, m^3/min
ΔH_2O = pressure drop across the orifice, in. H_2O.
Ta = ambient temperature, K.
Pa = ambient barometric pressure, mm Hg.
b = intercept of the orifice calibration relationship.
m = slope of the orifice calibration relationship.

13.1.15 Calculate and record the corresponding sampler flow rate at actual conditions using the following equation:

$$Qa(sampler) = \{\Delta Pex (Ta + 30)/Pa]^{1/2} - b\} \{l/m\}$$

or use the following if a flow recorder is being used to measure the exit orifice plenum pressure:

$$Qa(sampler) = \{I(Ta + 30)/Pa]^{1/2} - b\} \{l/m\}$$

where:

Qa(sampler) = sampler flow rate, actual m^3/min.
Δ Pex = exit orifice plenum pressure, in. H_2O.
Ta = ambient temperature during the flow check, K (K = °C + 273).
Pa = ambient barometric pressure during the flow check, mm Hg.
b = intercept of the MFC sampler calibration relationship.
m = slope of the MFC sampler calibration relationship.

[Note: If charts with linear-function scales are used, substitute $(I)^{1/2}$ for I.]

13.1.16 Using this information and the formulas provided on the MFC Sampler Flow-Check Data Sheet, calculate the QC check percentage differences.

$$\text{QC-check \% difference} = \frac{[Qa(sampler) - Qa(orifice)]}{Qa(orifice)} [100]$$

where:

Qa(sampler) is measured with the orifice transfer standard being installed.

Record this value on the MFC Sampler Flow-Check Data Sheet and plot on the QC control chart. If the sampler flow rate is within 93-107% (±7% difference) of the calculated Qa(orifice) flow rate (in actual volumetric units), the sampler calibration is acceptable. If these limits are exceeded, investigate and correct any malfunction. Recalibrate the sampler before sampling is resumed. Differences exceeding ±10% may result in the invalidation of all data collected subsequent to the last calibration or valid flow check. Before invalidating any data, double-check the orifice transfer standard's calibration and all calculations.

13.1.17 Calculate the corrected sampler flow rate, Qa(corr. sampler), using the following equation:

$$\text{Qa(corr. sampler} = [\text{Qa(sampler)}]\ \frac{[(100 - \%\ \text{difference})]}{100}$$

where:

Qa(sampler) is measured without the orifice transfer standard being installed and where the QC-check percentage difference was obtained from the equation above.

[Note: Take care to use the correct sign (i.e., positive or negative) for the percent difference.]

13.1.18 Calculate and record on the MFC Sampler Flow-Check Data Sheet the percentage difference between the inlet's design flow rate and the corrected sampler flow rate as:

$$\text{Design flow rate \% difference} = \frac{[\text{Qa(corr. sampler)} - 1.13]}{1.13)}[100]$$

[Note: The author assumes in this section that the inlet is designed to operate at a flow rate of 1.13 actual m^3/min. If the design flow rate percentage difference is less than or equal to ±7%, the sampler calibration is acceptable. If the difference is greater than ±7%, investigate potential error sources and correct any malfunction. Recalibrate the sampler before sampling is resumed. Differences exceeding ±10% may invalidate all data collected subsequent to the last calibration or valid flow check. Before invalidating any data, double-check the sampler's calibration, the orifice transfer standard's certification, and all calculations.]

[Note: Deviations from the design flow rate may be caused in part by deviations in the site temperature and pressure from the seasonal average conditions. Recalculate the optimum set-point flow rate (SFR) according to Section 7.4.4 to determine if the flow controller should be adjusted.]

13.1.19 Set up the sampler for the next sampling period according to the operating procedure in Section 9.4.

13.2 QC Flow-Check Procedure—VFC Sampler

The indicated flow rate (Qa (sampler)) for VFC samplers is calculated by determining:

- The relative stagnation pressure (Pstg),
- The ambient temperature (Ta), and
- The barometric pressure (Pa) during the flow check.

These values are then applied to the sampler's calibration relationship. An alternative QC flow-check procedure may be presented in the manufacturer's instruction manual. The manual should be reviewed and the various methods evaluated. Inhouse equipment and procedural simplicity should be considered in determining which method to use.

[Note: Do not attempt to conduct a flow check of samplers under windy conditions. Short-term wind velocity fluctuations will provide variable pressure readings by the orifice transfer standard's manometer.]

The flow check will be less precise because of the pressure variations.

13.2.1 Collect the following equipment and transport it to the monitoring station:

- An orifice transfer standard and its calibration relationship in actual volumetric flow units (Qa).
- An associated oil, water, or digital manometer, with a 0-400 mm (0-16") range and minimum scale divisions of 1 mm (0.1").
- An oil, water, or digital manometer, with a 0-400 mm (0-16") range and minimum scale divisions of 1 mm (0.1") or other pressure measurement device for measurement of the sampler stagnation pressure. Ideally, this manometer (or other pressure measurement device) should be associated with the sampler.

[Note: Manometers used for QC flow-checks may be subject to damage or malfunction and thus should be checked frequently.]

- A thermometer capable of accurately measuring temperature from 0°-50°C (273-323 K) to the nearest ±1°C and referenced to an NIST or ASTM thermometer within 2°C at least annually. To calculate the orifice flow rates, convert °C to K.
- A portable aneroid barometer (e.g., a climber or engineer's altimeter) capable of accurately measuring ambient barometric pressure over the range of 500-800 mm Hg to the nearest millimeter Hg and referenced within 5 mm Hg of a barometer of known accuracy at least annually.
- The sampler's calibration relationship (i.e., lookup table or alternative calibration relationship).
- A clean flow-check filter loaded into a filter cassette.
- A VFC Sampler Flow-Check Data Sheet (see Figure 13) or a site log book.

13.2.2 Set up the flow-check system as previously illustrated in Figure 12. VFC samplers are normally flow-checked with a loaded filter cassette in line (i.e., between the orifice transfer standard and the motor). The orifice transfer standard should be installed without fixed resistance plates or with the adjustable resistance value fully open. A flow-check filter should never be used for subsequent sampling because particles larger than 10 μm can be collected on the filter while the inlet is raised. The sample mass will be biased as a result of using a filter for both a flow check and subsequent sampling.
Caution: Tighten the faceplate nuts on alternate corners first to eliminate leaks and to ensure even tightening. The fittings should be hand-tightened; too much compressing can damage the sealing gasket. Make sure the orifice gasket is in place and the orifice transfer standard is not cross-threaded on the faceplate.

13.2.3 Turn on the sampler and allow the sampler to warm up to operating temperature (3-5 min).

[Note: The sampler inlet may be partially lowered over the orifice transfer standard to act as a draft shield (if a shield is not otherwise provided). Use a block to provide at least 2" of clearance at the bottom for air flow and for the manometer tubing.]

13.2.4 Read and record the following parameters on the VFC Sampler Flow-Check Data Sheet (see Figure 13):

- Sampler location and date.
- Sampler S/N and model.
- Ambient temperature (Ta), °C and K.
- Ambient barometric pressure (Pa), mm Hg.

- Unusual weather conditions.
- Orifice transfer standard S/N and calibration relationship.
- Operator's signature.

13.2.5 Inspect the manometers for crimps or cracks in the connecting tubing. Open the valves and blow gently through the tubing, watching for the free flow of the fluid.
Adjust the manometers' sliding scales so that the zero lines are at the bottom of the meniscuses.

13.2.6 Connect the orifice manometer to the orifice transfer standard and the sampler manometer to the sampler stagnation pressure port located on the side of the sampler base. Ensure that one side of each manometer is open to atmospheric pressure. Be sure that the connecting tubing snugly fits the pressure ports and the manometers.

13.2.7 Read the pressure drop as indicated by the orifice manometer (ΔH_2O) and record the value on the VFC Sampler Flow-Check Data Sheet. Read the stagnation pressure drop and record it as Δ Pstg (mm Hg) on the data sheet.

[Note: Be sure to convert the manometer reading to mm Hg using the following equation before recording the reading on the data sheet.]

$$\text{mm Hg} = 25.4(\text{in. } H_2O/13.6)$$

13.2.8 Turn off the sampler and remove the orifice transfer standard.

13.2.9 With only a loaded filter cassette in line, turn on the sampler and allow it to warm up to operating temperature.

13.2.10 Read and record the stagnation pressure drop (Δ Pstg) for the normal operating flow rate. Turn off the sampler. Replace the vacuum cap on the stagnation pressure port.

13.2.11 Calculate and record Qa(orifice) flow rate for the flow-check point, as in the equation, reproduced below:

$$Qa(\text{orifice}) = \{[(\Delta H_2O)(Ta/Pa)]^{1/2} - b]\ [l/m]$$

where:

Qa(orifice) = actual volumetric flow rate as indicated by the transfer standard orifice, m^3/min.
ΔH_2O = pressure drop across the orifice, in. H_2O.
Ta = ambient temperature, K (K = °C +273).
Pa = ambient barometric pressure, mm Hg.
b = intercept of the orifice calibration relationship.
m = slope of the orifice calibration relationship.

13.2.12 Calculate and record the value of Pl (mm Hg) for the measurements, with and without the orifice installed, according to the following equation:

$$Pl = [Pa - \Delta Pstg]$$

where:

Pl = stagnation pressure, mm Hg.
Pa = ambient barometric pressure, mm Hg.
Δ Pstg = stagnation pressure drop, mm Hg.

13.2.13 Calculate and record the stagnation pressure ratio for the measurements, with and without the orifice installed, according to the following equation:

$$\text{Stagnation pressure ratio} = Pl/Pa$$

where:

Pl = stagnation pressure, mm Hg.
Pa = ambient barometric pressure, mm Hg.

13.2.14 Refer to the instrument manufacturer's lookup table (or alternative calibration relationship as described in Section 7.5.4) and determine the Qa(sampler) flow rates (m^3/min) for the measurements with and without the orifice installed as indicated for the ratio of Pl/Pa and ambient temperature in °C. Record these values on the VFC sampler flow check data sheet.

13.2.15 Using Qa(orifice) and Qa(sampler) for the measurements with the orifice installed, calculate the QC-check percentage difference as:

$$\text{QC-check \% difference} = \frac{[\text{Qa(sampler)} - \text{Qa(orifice)}]}{\text{Qa(orifice)}}\,[100]$$

Record this value on the VFC Sampler Flow-Check Data Sheet and plot it on the control chart for QC flow checks. If the QC-check percentage difference is less than or equal to ±7%, the sampler calibration is acceptable. Those differences exceeding ±7% will require recalibration. Differences exceeding ±10% may invalidate all data collected subsequent to the last calibration or valid flow check. Before invalidating any data, double-check the sampler's calibration, the orifice transfer standard's certification, and all calibrations.

13.2.16 Using this percentage difference and Qa (sampler) from the measurements without the orifice installed (i.e., for the normal operating flow rate), calculate the corrected sampler flow rate as:

$$\text{Qa(corr. sampler} = [\text{Qa(sampler)}]\,\frac{[(100 - \text{\% difference})]}{100}$$

Record Qa (corr. sampler) on the VFC Sampler Flow-Check Data Sheet.

13.2.17 Determine the design flow rate percentage difference between the PM_{10} sampler inlet design flow rate (e.g., 1.13 m^3/min) and Qa (corr. sampler) as:

$$\text{QC-check \% difference} = \frac{[\text{Qa(sampler)} - \text{Qa(orifice)}]}{\text{Qa(orifice)}}\,[100]$$

Record this design flow rate percentage difference on the VFC Sampler Flow-Check Data Sheet and plot it on the control chart for the field validation of flow rates. When plotting this value, use a different symbol than is normally used for plotting values that are obtained during sampling periods. If the design flow rate percentage difference is less than or equal to ±7%, the sampler calibration is acceptable. Those differences exceeding ±7% will require recalibration. Differences exceeding ±10% may invalidate all data obtained subsequent to the last calibration or valid flow check. Before invalidating any data, double-check the sampler's calibration, the orifice transfer standard's certification, and all calculations.

14. Maintenance

Maintenance is defined as a program of positive actions aimed toward preventing failure of monitoring and analytical systems. The overall objective of a routine preventive maintenance program is to increase measurement system reliability and provide more complete data acquisition. The general maintenance procedures for HV samplers are outlined in this section. For more complete information on a particular sampler or on laboratory equipment maintenance, refer to the manufacturer's instruction manual for the individual instrument. Maintenance activities for the HV sampler are summarized in Table 4. Records should be maintained for the maintenance schedule of each HV sampler. Files should reflect the history of maintenance, including all replacement parts, suppliers, costs, expenditures, and in inventory of on-hand spare equipment for each sampler. Check sheets should be used to record preventive and/or corrective maintenance activities and the subsequent sampler calibration curve.

14.1 Maintenance Procedures

The HV sampler is comprised of two basic components: the inlet and the flow control system. Because of the differences between sampler models, refer to the manufacturer's instruction manual for specific maintenance guidelines and necessary supplies.

14.2 Recommended Maintenance Schedules

14.2.1 MFC Base. The MFC base is equipped with the following items:

14.2.1.1 Connecting tubing and power lines, which must be checked for crimps, cracks, or obstructions on sample recovery days. Fittings should be inspected periodically for cross-threading and tightness.

14.2.1.2 A filter screen, which should be inspected on sample recovery days for any impacted deposits.

14.2.1.3 Filter cassette gaskets, which need to be inspected each time a cassette is loaded. A worn cassette gasket is characterized on exposed filters by a gradual blending of the boundary between the collected particulate and the filter border.

14.2.1.4 Motor and housing gaskets, which should be checked at 3-month intervals and replaced as necessary.

14.2.1.5 Blower motor brushes, which should be replaced before they become worn to the point that damage may occur. Although motor brushes usually require replacement after 600-1,000 hours of operation, the optimum replacement interval must be determined by experience. A pumice stone can be used against the motor's contacts to ensure high conductivity. Change the brushes according to manufacturer's instructions and perform the operator's field-calibration check as presented in Section 13. If the sampler's indicated flow rate exceeds the manufacturer-specified design-flow-rate range, adjust the sampler before the next run day.

To achieve the best performance, new brushes should be properly seated on the motor's commutator before full voltage is applied to them. After the brushes have been changed, operate the sampler at 50-75% of normal line voltage for approximately 30 min. The motor should return to full performance after an additional 30-45 min at normal line voltage.

[Note: The motors that are used for HV samplers are higher-current versions of the motors that have been used for HV total suspended particulate samplers. The brushes for the two types of motors are different. Make sure that the correct replacement brushes are used for the maintenance of HV samplers. If a motor needs to be replaced, be sure to use the higher-current versions that are needed for HV sampling. When lower-current motors are installed in HV samplers, the flow rate has been found to vary with changes in the line voltage.]

14.2.1.6 A flow controller should be replaced if the flow recorder indicates no flow, low flow, excessive flow, or erratic flow. Minor adjustments can be made to alter sampling flow rates; however, the controller generally cannot be repaired in the field.

[Note: A flow recorder requires very little maintenance, but does deteriorate with age. Difficulty in zeroing the recorder and/or significant differences (i.e., greater than 0.3 m^3/min) in average flow rates obtained from consecutive sampling periods usually indicate a faulty recorder. The recorder pens should be replaced every 30 recording days. In dry climates, a more frequent replacement schedule may be required.]

14.2.2 VFC Base. The VFC base is equipped with the following items:

14.2.2.1 Power lines, which must be checked for crimps or cracks on sample recovery days. Fittings should be inspected periodically for cross-threading and tightness.

14.2.2.2 A filter screen at the throat of the choked-flow venturi, which should be inspected on sample recovery days for any impacted deposits.

14.2.2.3 Filter cassette gaskets, which should be checked each time a filter is installed. A worn casket gasket is characterized on exposed filters by a gradual blending of the boundary between the collected particulates and the filter border.

14.2.2.4 Motor and housing gaskets, which should be checked at 3-month intervals and replaced as necessary.

14.2.2.5 Blower motor brushes, which should be replaced before they become worn to the point that damage may occur. Although motor brushes usually require replacement after 600-1,000 hours of operation, the optimum replacement interval must be determined by experience. A pumice stone can be used against the motor's contacts to ensure high conductivity. Change the brushes according to manufacturer's instructions, and perform the operator's field-calibration check as presented in Section 13. If the sampler's indicated flow rate exceeds the manufacturer-specified design flow-rate range, recalibrate the sampler before the next run day.

To achieve the best performance, new brushes should be seated properly on the motor's commutator before full voltage is applied to them. After the brushes have been changed, operate the sampler at 50-75% of normal line voltage for approximately 30 min. The motor should return to full performance after an additional 30-45 min at normal line voltage.

Caution: Motors that are used for HV PM_{10} samplers are higher-current versions of the motors that have been used for HV total suspended particulate samplers. The brushes for the two types of motor are different. Make sure that the correct replacement brushes are used for the maintenance of HV PM_{10} samplers.

14.2.2.6 If a motor needs to be replaced, be sure to use the higher-current versions that are needed for HV PM_{10} sampling. When lower-current motors are installed in HV PM_{10} samplers, the flow rate has been found to vary with changes in the line voltage.

14.3 Refurbishment of HV Samplers

If operated in the field for extended periods, HV PM_{10} samplers may require major repairs or complete refurbishment. If so, refer to the manufacturer's instrument manual before work is undertaken. A sampler that has undergone major repairs or refurbishment must be leak-checked and calibrated prior to sample collection.

15. REFERENCES

1. U. S. Environmental Protection Agency, *Quality Assurance Handbook for Air Pollution Measurement Systems: Volume II: Ambient Air Specific Methods (Interim Edition),* EPA/600/R-94/038b.

2. U. S. Environmental Protection Agency, *Code of Federal Regulations. Title 40, Chapter I, Subchapter C, Part 50, Appendix J,* Office of the Federal Register, Washington, D.C., 1988.

3. U. S. Environmental Protection Agency, *Code of Federal Regulations, Title 40, Chapter I, Subchapter C, Part 53, Subpart D,* Office of the Federal Register, Washington, D.C., 1988.

4. Smith, F., P. S. Wohlschlegel, R.S.C. Rogers and D. J. Mulligan, *Investigation of Flow Rate Calibration Procedures Associated with the High Volume Method for Determination of Suspended Particulates,* EPA-600/4-78-047, U. S. Environmental Protection Agency, Research Triangle Park, NC, 1978.

5. American Gas Association, *American National Standard for Rotary-Type Gas Displacement Meters,* ANSI Standard No. B109.3, AGA Catalog No. X68606, Arlington, VA, 1986.

6. Koch, R. C. and H. E. Rector, *Optimum Network Design and Site Exposure Criteria for Particulate Matter,* EPA-450/4-87-009, U. S. Environmental Protection Agency, Research Triangle Park, NC, 1987.

7. Coutant, R. W. "Effect of Environmental Variables on Collection of Atmospheric Sulfate," *Environmental Science and Technology,* Vol. 11(9):873-878, September 1977.

8. American Society for Testing and Materials, "Standard Method for Evaluation of Air Assay Media by the Monodisperse DOP (Dioctyl Phthalate) Smoke Test," ASTM Standard No. D2986-71(79) in *Annual Book of ASTM Standards. Volume 11.03-Atmospheric Analysis: Occupational Health and Safety,* Philadelphia, PA 1988.

9. Harrell, R.M., *Measuring the Alkalinity of Hi-vol Air Filters,* EMSL/RTP-SOP-QAD534, U. S. Environmental Protection Agency, Atmospheric Research and Exposure Assessment Laboratory, Quality Assurance Division, Research Triangle Park, NC, 27711, October 1985.

10. "Reference Method for the Determination of Suspended Particulates in the Atmospheric (High Volume Method)," *Federal Register,* Vol. 36(84), April 30, 1971.

11. American Public Health Association, "Tentative Method of Analysis for Suspended Particulate Matter in the Atmosphere: (High Volume Method)," *Methods of Air Sampling and Analysis, Inter-society Committee,* pp. 365-372, Washington, D.C., 1972.

12. McKee, H. C., et al, "Collaborative Testing of Methods to Measure Air Pollutants, I, The High-Volume Method for Suspended Particulate Matter," *Journal of the Air Pollution Control Association,* Vol. 22(5):342-347, 1972.

13. "Ambient Air Quality Monitoring," 40 CFR 58, *Federal Register*, Vol. 44(9)2, 2755827604.

14. Benson, Levins, Massucco, Sparrow, and Valentine, "Development of a High Purity Filter for High Temperature Particulate Sampling and Analysis," *Journal of the Air Pollution Control Association,* Vol.25(3):274-277, 1975.

15. Smith, J.H., and Surprenant, N.F., "Properties of Various Filtering Media for Atmospheric Dust Sampling," *Proceedings ASTM,* Vol. 55, 1955.

16. Wedding, J. B., McFarland A. R., and Cermak, J. E., "Large Particle Collection Characteristics of Ambient Aerosol Samplers," *Environmental Science and Technology,* Vol.11:387-390, 1977.

17. Fennelly, P. F., "The Origin and Influence of Airborne Particulates," *American Scientist,* Vol. 64:46-56, 1976.

TABLE 1. BASIC CHARACTERISTICS OF SOME COMMON FILTER MATERIAL

QUARTZ FIBER FILTER (Glass Spun with Organic Binder)

• Whatman QMA Filter
  • Maximum temperature of up to 540°C
  • High Collection Efficiency
  • Non-hydroscopic
  • Good for Corrosive Atmospheres
  • Fragile
  • Lowest background metals content

CELLULOSE FIBER FILTER (Cellulose Pulp)

• Whatman # 41/MSA "s"
  • Low Ash
  • Maximum Temperature of 150°C
  • High Affinity for Water
  • Enhanced Artifact Formation for $SO_4^{=}$ and NO_3
  • Good for X-Ray/Neutron Activation Analysis
  • Low Metal Content

MEMBRANE FILTER (Dry Gel of Cellulose Esters)

• Whatman #41
  • Fragile, Therefore Requires Support Pad
  • High Pressure Drop
  • Low Residue when Ashed

TABLE 2. SUMMARY OF USEFUL FILTER PROPERTIES

Filter and Filter Composition	Density mg/cm^2	pH	Filter Efficiency %
Teflon® (Membrane) $(CF_2)_n$(2μm Pore Size)	0.5	Neutral	99.95
Cellulose (Whatman 41) $(C_6H_{10}O_5)_n$	8.7	Neutral (Reacts with HNO_3)	58% at 0.3 μm
Glass Fiber (Whatman GF/C)	5.16	Basic pH - 9	99.0
"Quartz" Gelman Microquartz	6.51	pH - 7	98.5
Polycarbonate (Nuclepore) $C_{15}H_{14}+CO_3$ (0.3μm Pore Size	0.8	Neutral	93.9
Cellulose Acetate/Nitrate Millipore $(C_9H_{13}O_7)_n$(1.21 μm Pore Size)	5.0	Neutral (Reacts with HNO_3)	99.6

TABLE 3. MINIMUM HIGH VOLUME SAMPLER SITING CRITERIA

Scale	Height above ground, meters	Distance from supporting structure, meters		Other spacing criteria
		Vertical	Horizontal[a]	
Micro	2 to 7	>2		1. Should be >20 meters from trees. 2. Distance from sampler to obstacle, such buildings, must be twice the height and the obstacle protrudes above the sampler. 3. Must have unrestricted airflow 270 degrees around the sampler inlet. 4. No furnace or incineration flues should be nearby.[b] 5. Spacing from roads varies with traffic (see 40 CFR 58, Appendix E). 6. Sampler inlet is at least 2 m but not greater than 4 m from any collocated PM10 sampler. (See 40 CFR 58, Appendix A.)
Middle, neighborhood, urban, and regional scale	2 to 15	>2		

[a]When inlet is located on rooftop, this separation distance is in reference to walls, parapets, or penthouses located on the roof.

[b]Distance depends on the height of furnace or incineration flues, type of fuel or waste burned, and quality of fuel (sulfur, ash, or lead content). This is to avoid undue influences from minor pollutant sources.

TABLE 4. EXAMPLE OF ROUTINE MAINTENANCE ACTIVITIES FOR HIGH VOLUME SAMPLERS

Equipment	Frequency and/or method	Acceptance limits	Action if requirements are not met
Sampler inlet	Dismantle and clean at manufacturer-specified internals	No obvious particulate deposits or damage	Clean, replace damaged equipment before sampling
Sampler base			
Power lines	Check for crimps or cracks	No obvious damage	Replace as necessary
Filter screen and throat	Visually check on sample-recovery days	No obvious deposits; clean with wire brush	Clean
Gaskets	At 3-mo intervals, inspect all gaskets in the sampler	No leaks; no compression damage evident	Replace as necessary
Brushes	Replace after 600-1,000 h of operation	Stable flow rate	Replace as necessary
Motor	Replace if needed	Correct model must be used	Obtain correct model
Flow controller	Check when flowrate changes are evident	Stable flow rate throughout sample run	Replace or repair if possible
Recording device	Inspection with experiencing difficulty in zeroing, or when large changes in flow rates occur	Recorder stays zeroed; chart advances; pen inks	Replace or repair if possible
Tubing, fittings	Visually inspect on sample-recovery days	No crimps, cracks, or obstructions; no crossthreading	Replace as necessary.

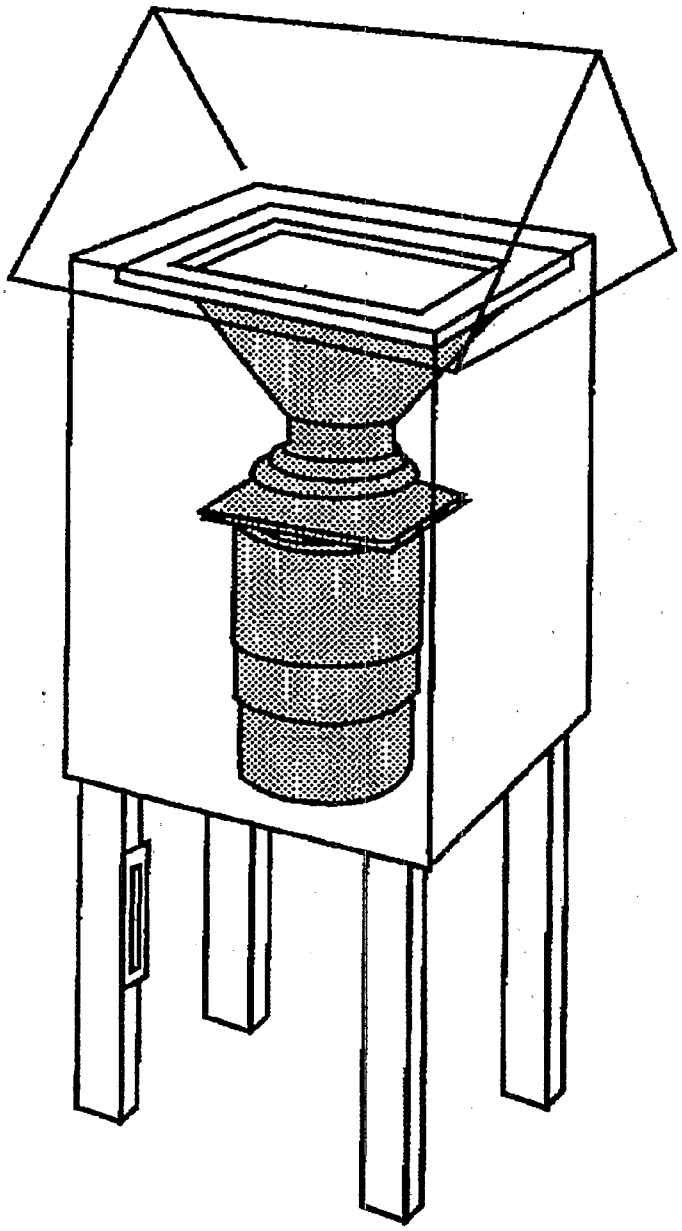

Figure 1. Hi-vol sampler with shelter.

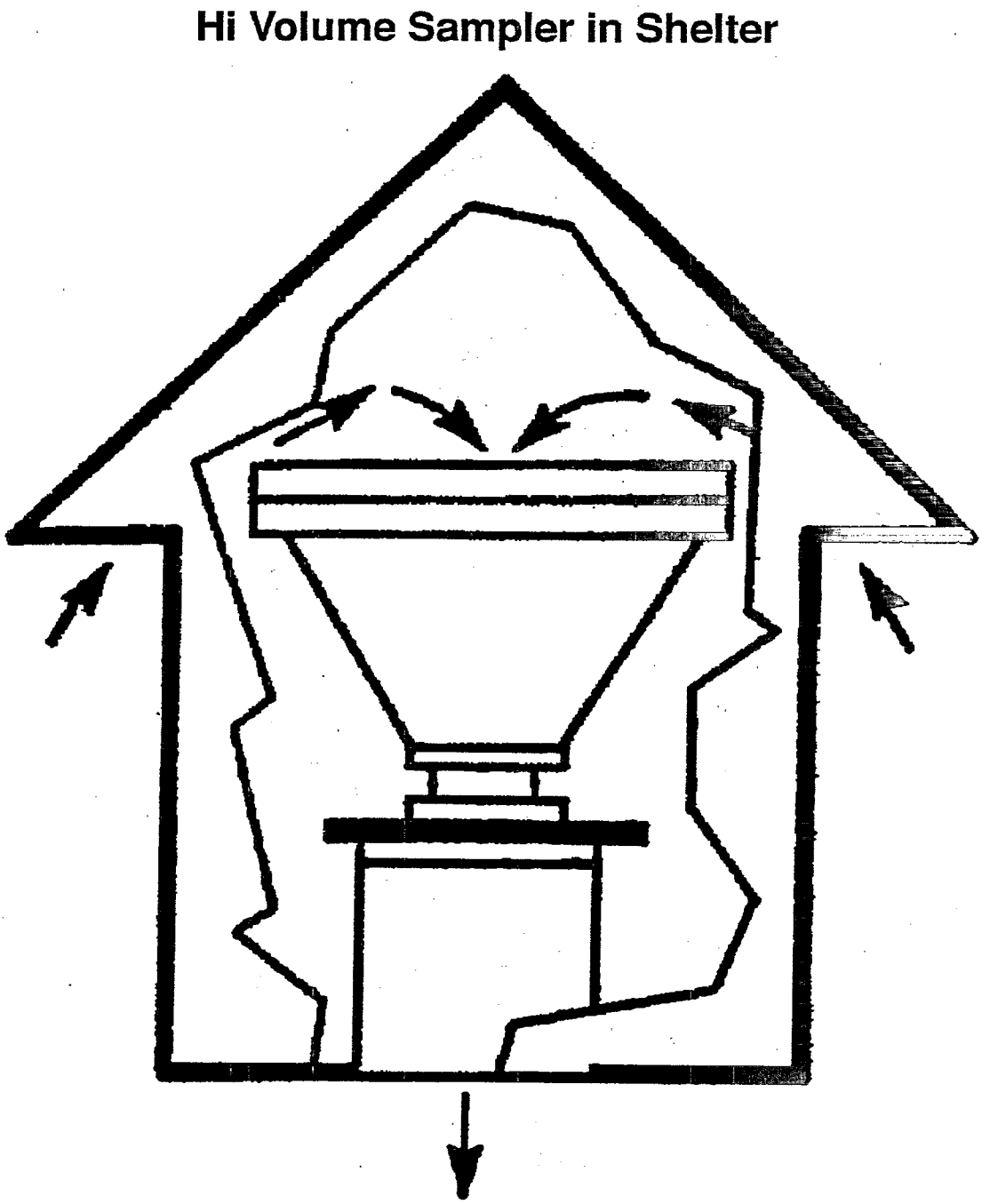

Figure 2. Inlet to EPA approved high volume sampler.

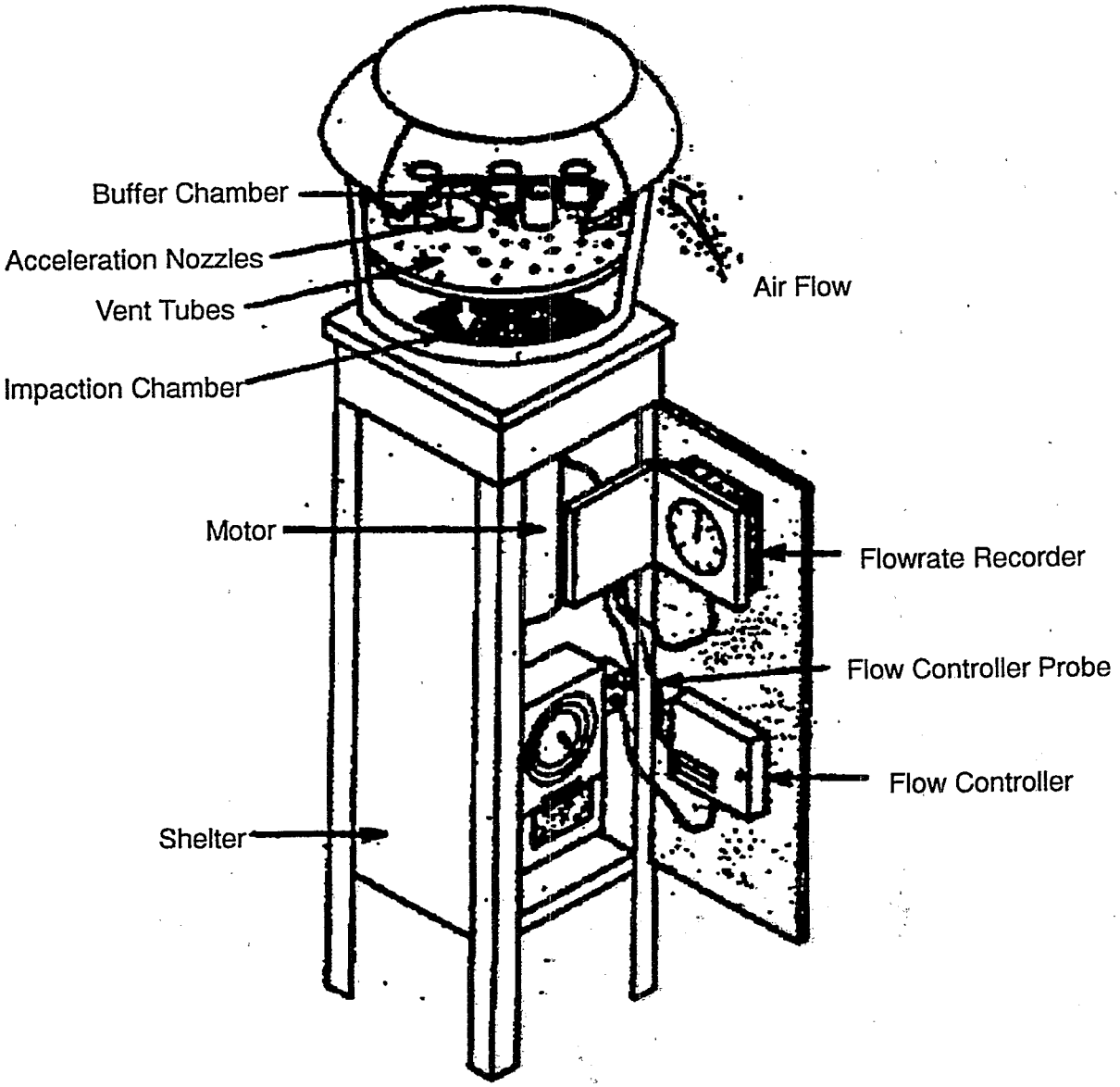

Figure 3. High-volume sampler with mass flow controller and impactor design size select inlet.

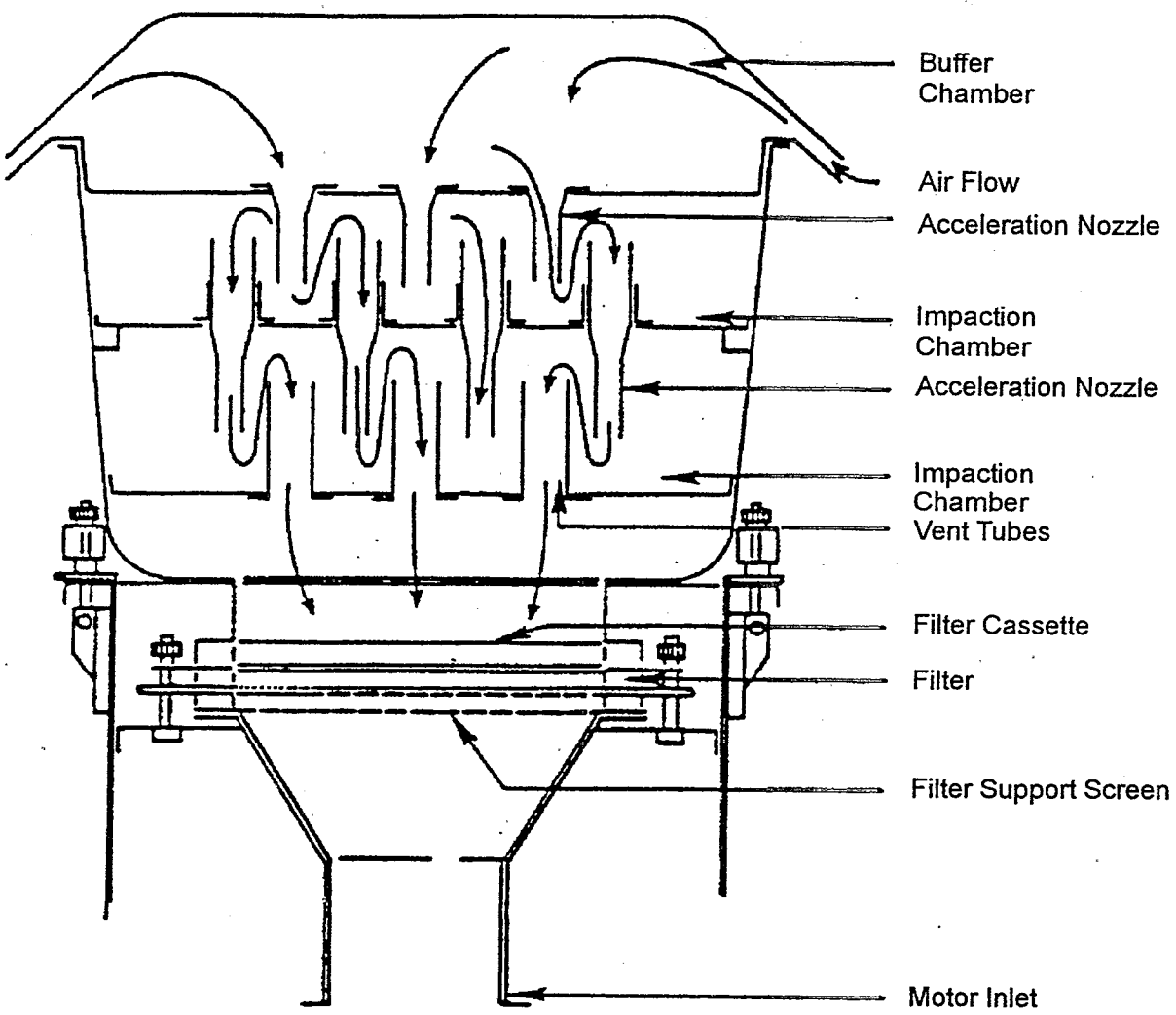

Figure 4. Schematic diagram of an impaction inlet, for size select sampling for particulate matter.

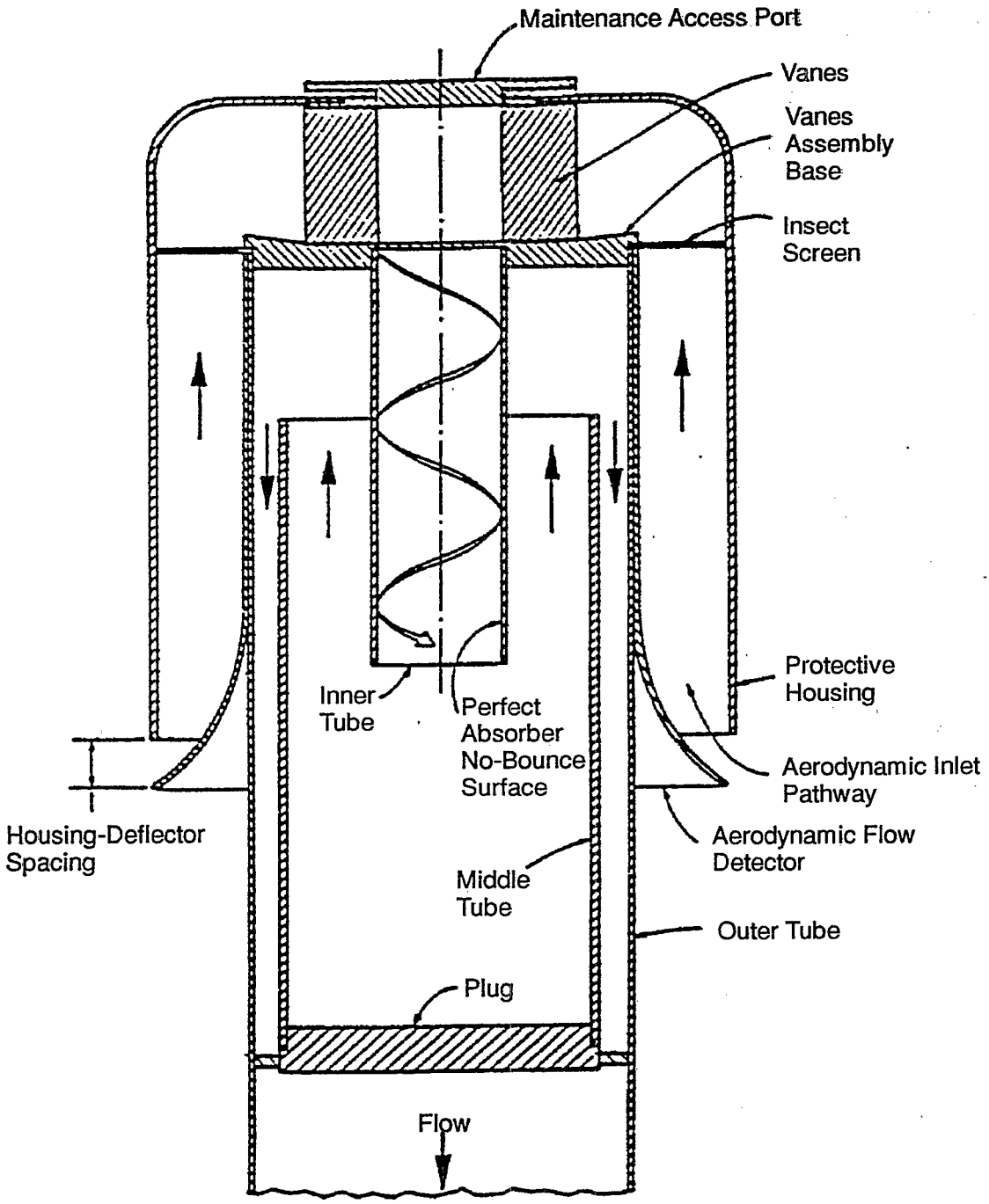

Figure 5. Schematic diagram of a cyclonic inlet for size select sampling for particulate matter.

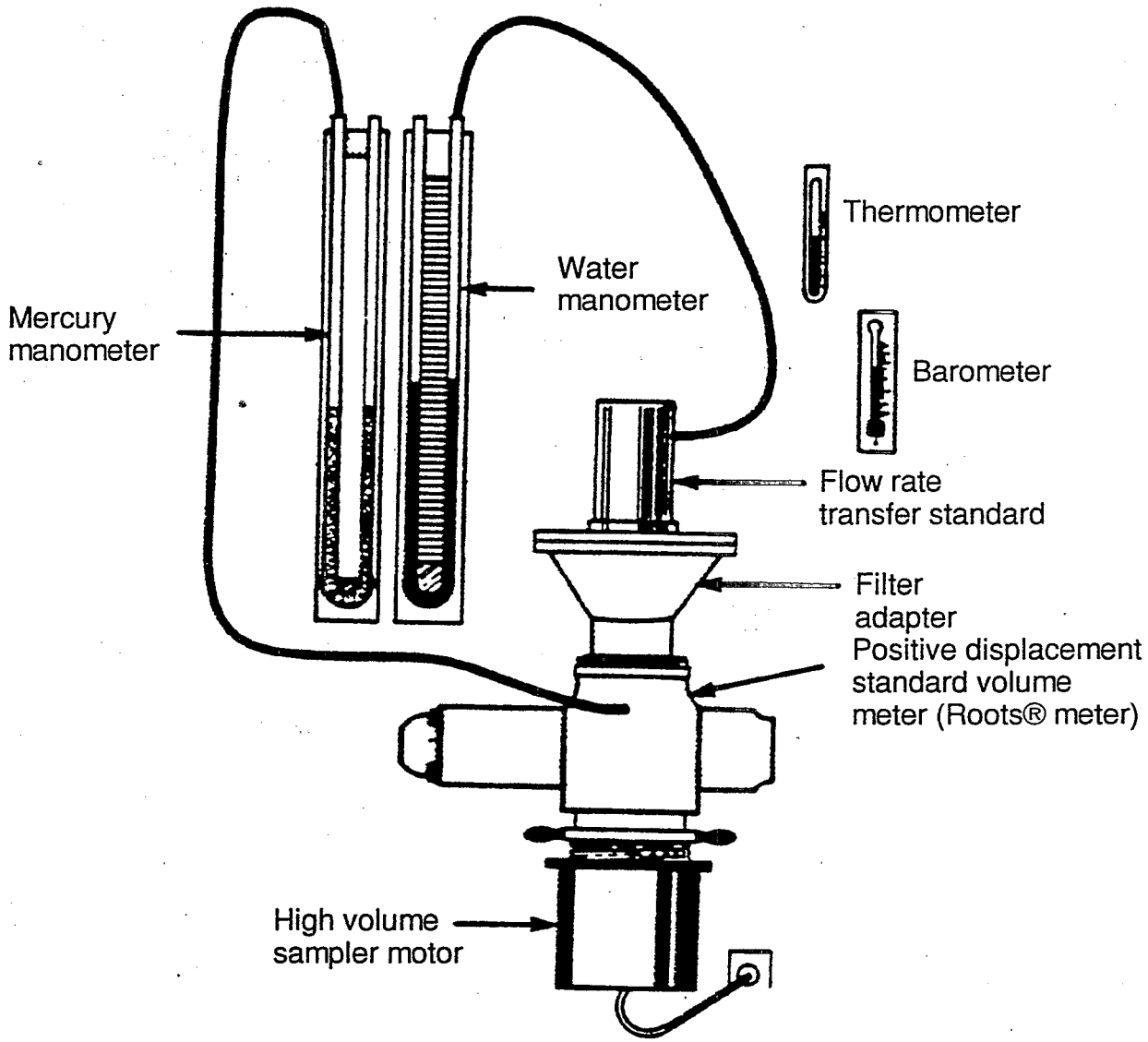

Figure 6. Flow rate transfer standard calibration setup.

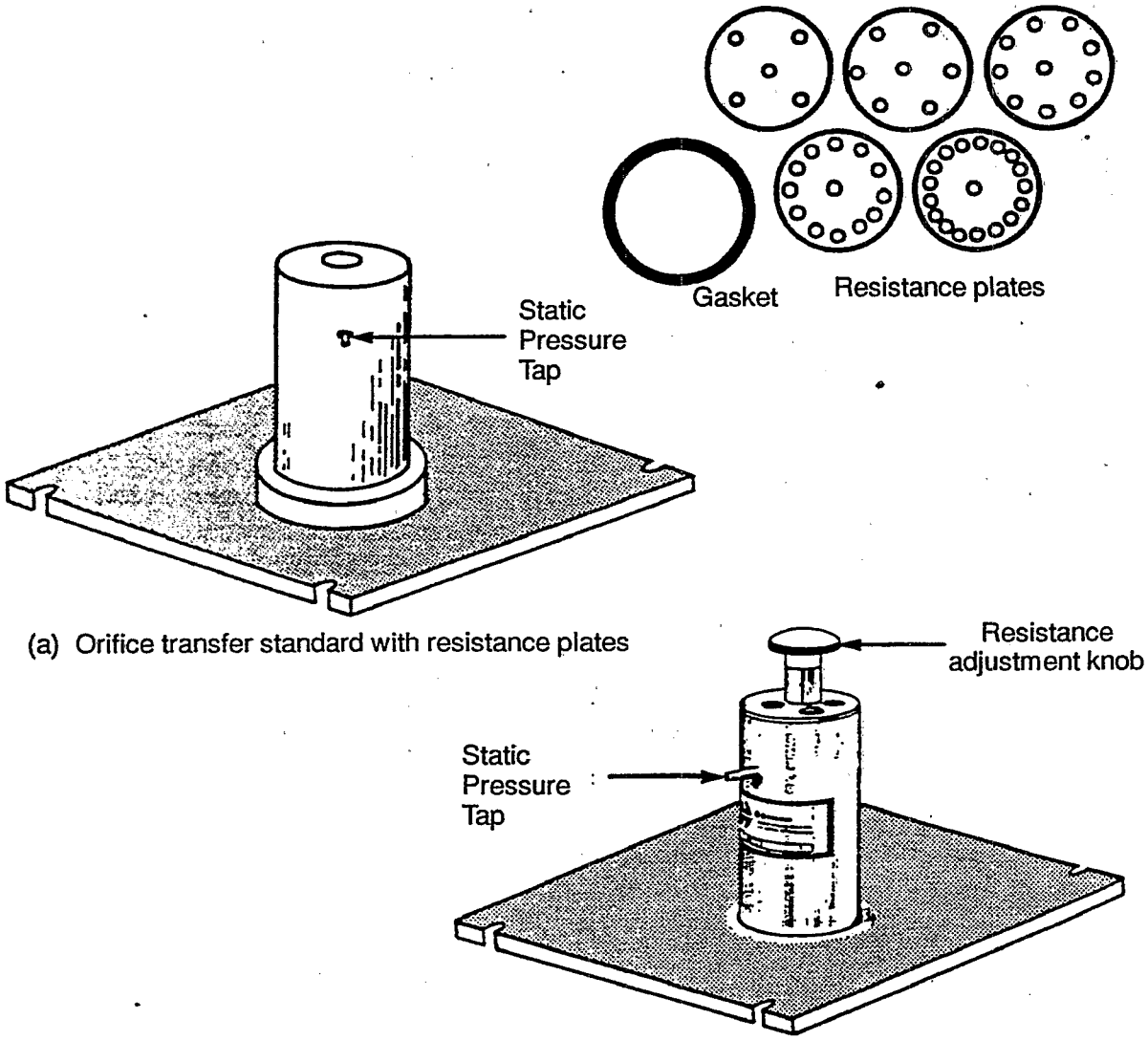

Figure 7. Typical orifice-type flow rate transfer standards.

ORIFICE TRANSFER STANDARD CERTIFICATION WORKSHEET

Date:	Roots meter S/N:	Ta:	K
Operator:	Orifice S/N:	Pa:	mm Hg

Plate or Volts AC	Initial Volume	Final Volume	Δ Vol.	ΔTime (min)	ΔHg (mm)	ΔH_2O (in.)

DATA TABULATION

Vstd	*(x-axis)* Qstd	*(y-axis)* $[\Delta H_2O\ (Pa/Ta)]^{1/2}$*	Va	*(x-axis)* Qa	*(y-axis)* $[\Delta H_2O\ (Ta/Pa)]^{1/2}$
	m =			m =	
	b =			b =	
	r =			r =	

CALCULATIONS

$Vstd = \Delta Vol\ [(Pa - \Delta Hg)/760]\ (298/Ta)$*
$Qstd = Vstd/\Delta Time$*
$y = mx + b$

$Va = \Delta Vol\ [(Pa - \Delta Hg)/Pa]$
$Qa = Va/\Delta Time$*
$y = mx + b$

For subsequent flow rate calculations:

$Qstd = \{[\Delta H_2O\ (Pa/Ta)]^{1/2} - b\}\ \{1/m\}$*

$Qa = \{[\Delta H_2O\ (Ta/Pa)]^{1/2} - b\}\ \{1/m\}$

*NOTE: For PM10 monitoring, a calibration curve corrected to standard conditions is optional.

Figure 8. Example orifice transfer standard certification worksheet.

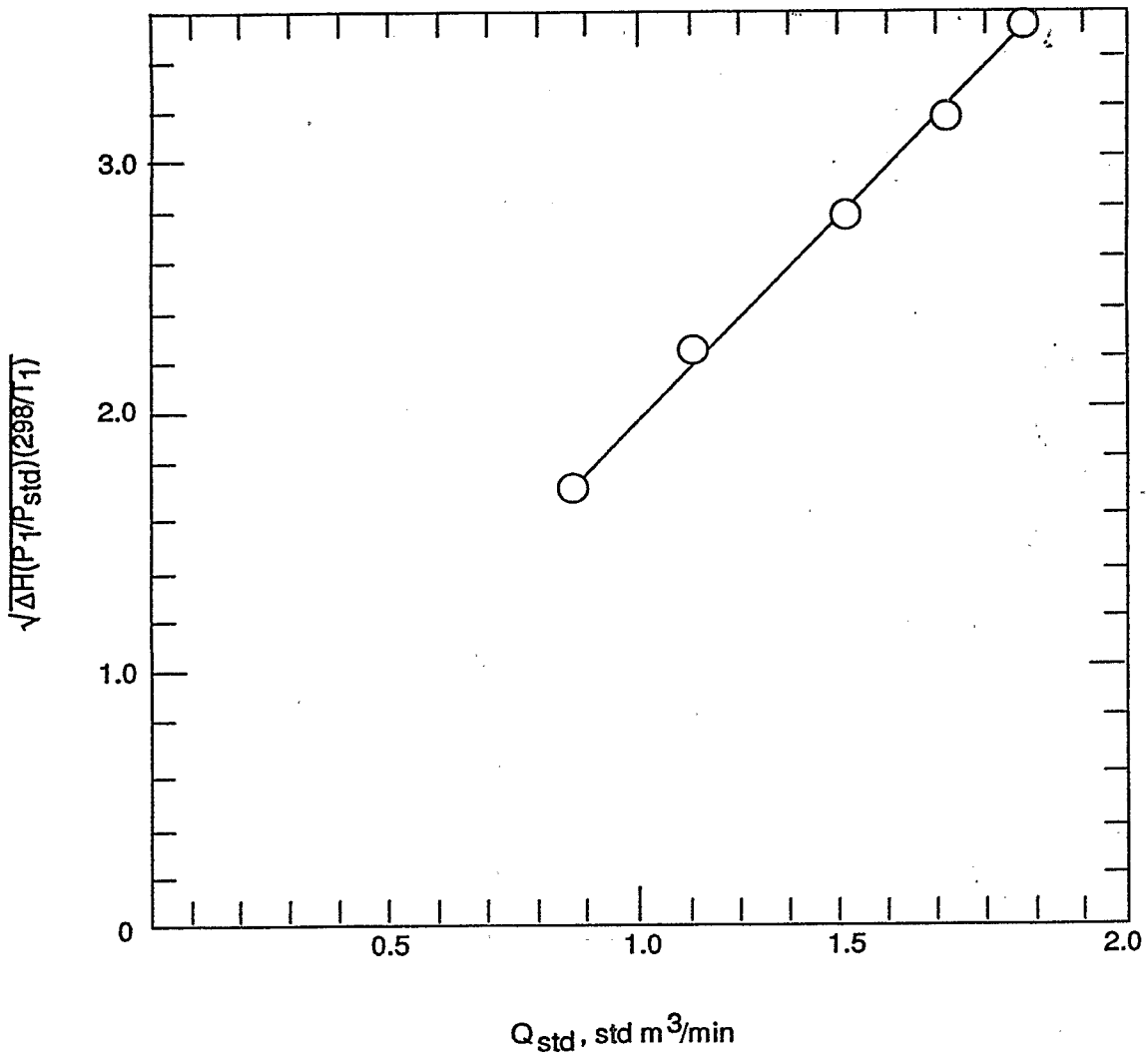

Figure 9. Typical calibration curve for a flow rate transfer standard.

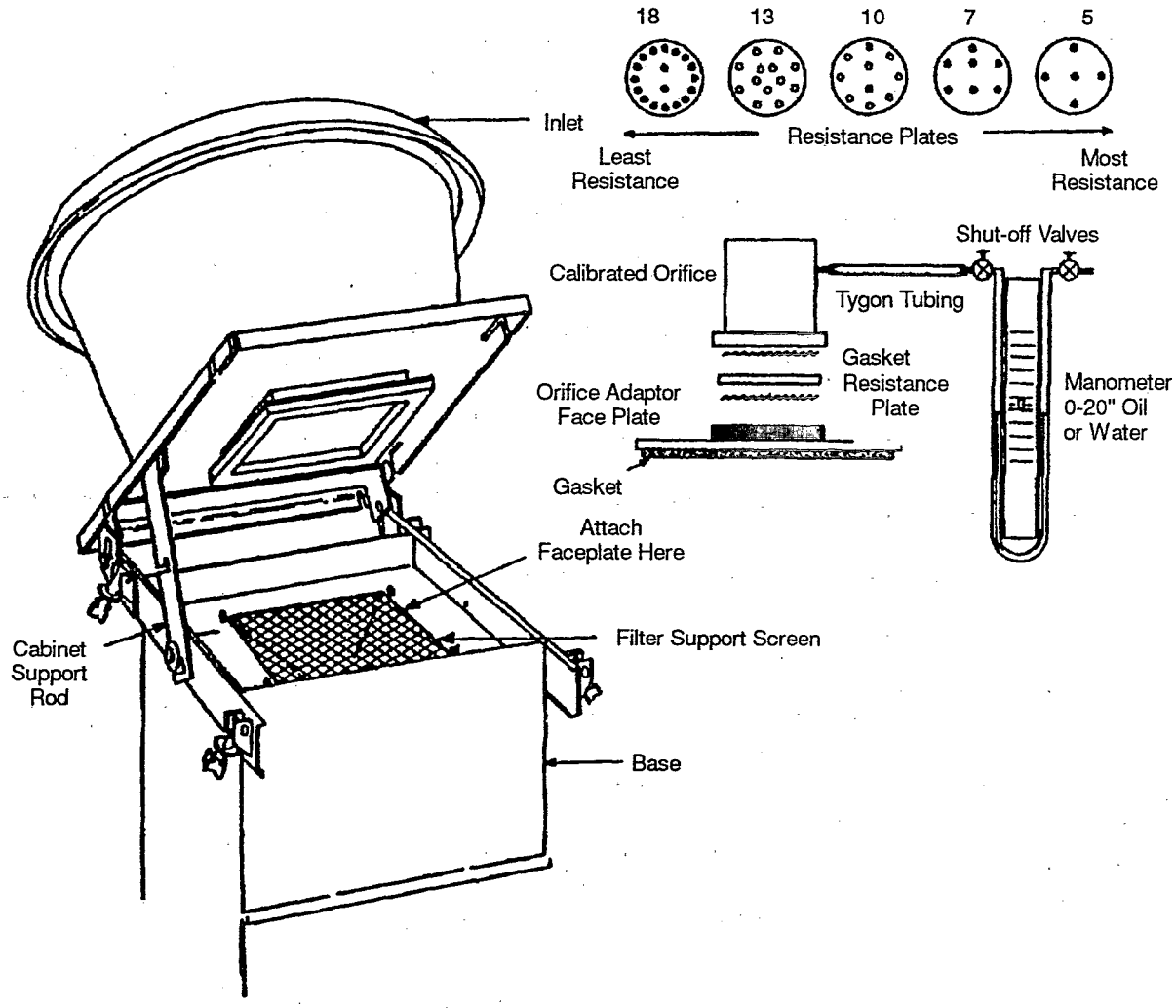

Figure 10. Typical calibration set-up for a mass flow controller (MFC).

MFC SAMPLER CALIBRATION DATA SHEET

Station Location _____ Date _____ Time _____

Sampler Model _____ S/N _____ Operator _____

Pa _____ mm Hg, Ta _____ °C _____ K, Unusual conditions: _____

Ps* _____ mm Hg, Ts* _____ °C _____ K, (*seasonal average Ta and Pa)

Orifice S/N _____ Orifice Calibration Date _____

Orifice calibration relationship: m = _____ b = _____ r = _____

Plate Number	Total ΔH_2O (in.)	X-Axis = Qa (orifice) flow rate[a] (m^3/min)	Sampler ΔPex (in. H_2O) [or I for flow recorders]	Y-Axis = Sampler ΔPext[b] [or It for flow recorders][c]

[a]$Qa = \{[(\Delta H_2O)(Ta/Pa)]^{1/2} - b\}\{1/m\}$

[b]$\Delta Pext = [\Delta Pex(Ta + 30)/Pa)]^{1/2}$

[c]$It = [I][(Ta + 30)/Pa]^{1/2}$ if a flow recorder is used

Sampler Calibration Relationship (Qa on x-axis; ΔPext or [It] on y-axis):
$\Delta Pext = m[Qa\ (Orifice)] + b$ or $It = m[Qa(Orifice)] + b$

m = _____ b = _____ r = _____

For subsequent calculation of sampler flow rate:
$\overline{Qa} = \{[mean\ \Delta Pex\ (Tav + 30)/Pav]^{1/2} - b\}\{1/m\}$
or $\overline{Qa} = \{mean\ I[(Tav + 30)/Pav]^{1/2} - b\}\{1/m\}$

Set point flow rate (SFR) _____
$SFR = 1.13\ (Ps/Pa)\ (Ta/Ts)$

Sampler set point (SSP) _____
$SSP = [Pa/(Ta + 30)]\ [m(SFR) + b]^2$
or $SSP = [Pa/(Ta + 30)]^{1/2}\ [m(SFR) + b]$ for flow recorders

Figure 11. Example MFC sampler calibration data sheet.

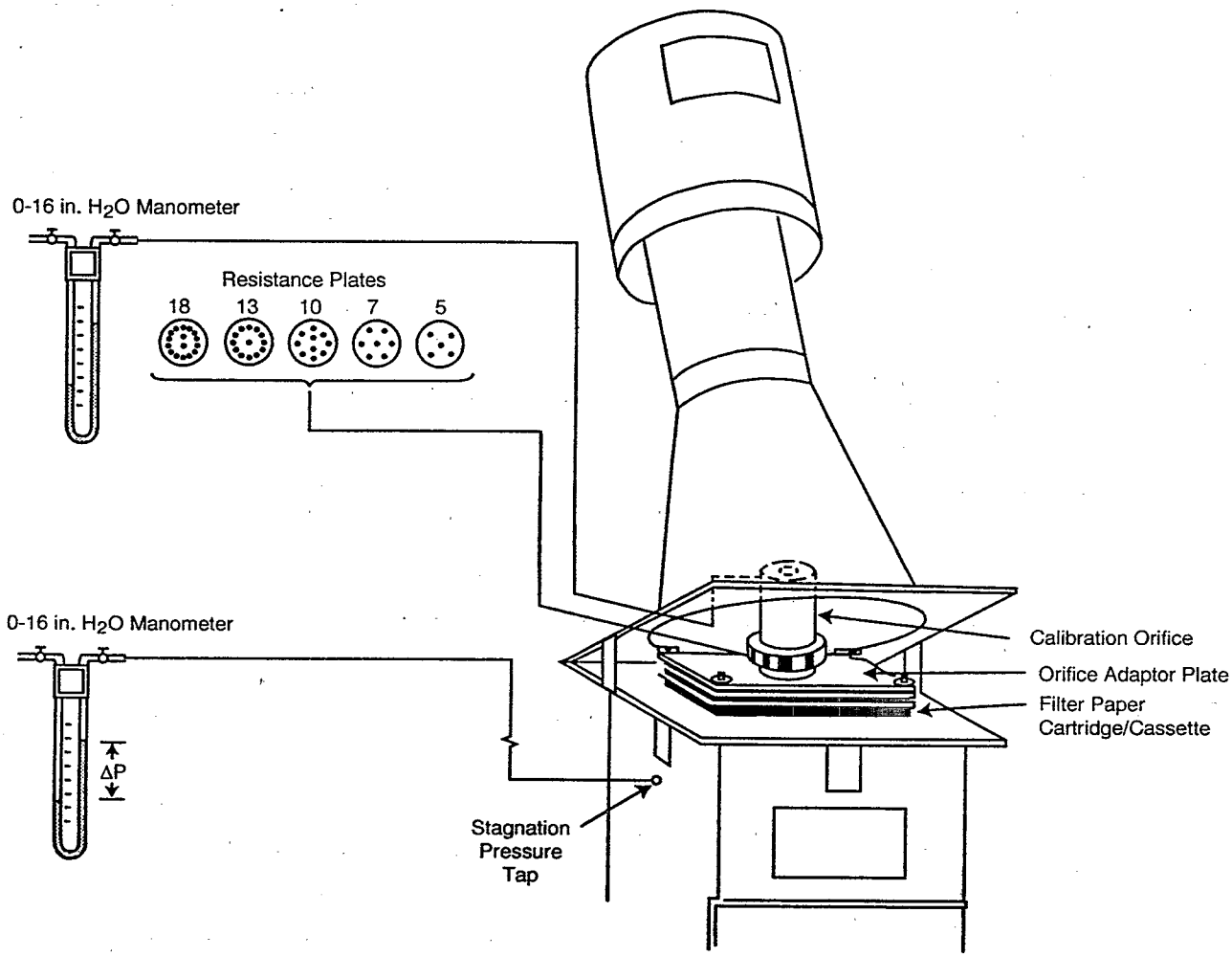

Figure 12. Calibration of a typical volumetric flow controller (VFC).

VFC SAMPLER CALIBRATION DATA SHEET

Station Location _____ Date _____ Time _____

Sampler Model _____ S/N _____ Operator _____

Pa _____ mm Hg, Ta _____ °C _____ K, Unusual Conditions _____

Orifice S/N _____, Orifice Calibration Date _____

Orifice Calibration Relationship: m = _____ b = _____ r = _____

Plate No.	ΔH_2O (in.)	ΔPstg (mm Hg)[a]	P1=Pa−ΔPstg (mm Hg)	P1/Pa (mm Hg)	Qa (orifice) flow rate[b] (m^3/min)	Qa (orifice) / [Ta]½
Operational Flow Rate						

[a]mm Hg = 25.4 (in. H_2O/13.6)

[b]Qa (orifice) = 1/m {[(ΔH_2O) (Ta/Pa)]$^{1/2}$ − b}

[c]% Difference = $\left[\frac{\text{Qa (sampler)} - \text{Qa (orifice)}}{\text{Qa (orifice)}}\right]$ [100]

Qa (Orifice)	Qa (sampler) (Lookup Table)	% Difference[c]

Sampler Calibration Relationship

- ☐ Lookup Table Validated (i.e., % difference ≤ 4)
- ☐ New calibration relationship:

$$(X = \frac{\text{Qa (orifice)}}{[Ta]^{1/2}},\ Y = (P1/Pa)$$

m = _____ b = _____ r = _____

For subsequent calculation of sampler flow rate:

$$Qa = \{[P1/Pa - b][Ta]^{1/2}\}\ \{1/m\}$$

Operational Flow Rate _____ m^3/min

Figure 13. Example VFC sampler calibration data sheet.

MFC SAMPLER FIELD DATA SHEET

Station Location _____ Date _____ SAROAD# _____

Sampler Model _____ S/N _____

Filter ID No. _____ Pav _____ mm Hg, Tav _____ °C _____ K

Sampler Manometer Readings

Initial ΔPex _____ in. H_2O

Final ΔPex _____ in. H_2O

Mean ΔPex _____ in. H_2O

Flow Recorder Readings

Mean I _____

Sampler Calibration Relationship: m = _____ b = _____ r = _____

$\overline{Qa}$ _____ m^3/min Elapsed Time _____ min

$\overline{Qa}$ = {[mean ΔPex (Tav + 30)/Pav]$^{1/2}$ − b} {1/m}

$\overline{Qa}$ = {mean I [(Tav + 30)/Pav]$^{1/2}$ − b} {1/m} for flow recorders

Operator _____

Comments: _____

_____

_____

_____

Laboratory Calculations:

$\overline{Qstd}$ _____ std m^3/min

$\overline{Qstd}$ = $\overline{Qa}$ (Pav/Pstd) (Tstd/Tav)

Vstd _____ std m^3

Vstd = ($\overline{Qstd}$) (elapsed time)

Gross weight (Wg) _____ g

Tare weight (Wt) _____ g

Net Weight (Wn) _____ g

PM10 Concentration _____ μg/std m^3

PM10 Concentration = (Wn) (10^6)/Vstd

Figure 14. Example MFC sampler field data sheet.

VFC SAMPLER FIELD DATA SHEET

Station Location _____ Date _____ SAROAD# _____

Sampler Model _____ S/N _____

Filter ID No. _____ Pav _____ mm Hg, Tav _____ °C _____ K

Relative Stagnation Pressure Readings

Initial ΔPstg _____ mm Hg

Final ΔPstg _____ mm Hg

Average ΔPstg = _____ mm Hg

Absolute Stagnation Pressure

$\overline{P1}$ = _____ mm Hg

$\overline{P1}$ = Pav − Average ΔPstg

Average Stagnation Pressure Ratio ($\overline{P1}$/Pav) _____

Average Flowrate ($\overline{Qa}$)* _____ m^3/min

*Obtained from manufacturer's lookup table (or from alternate calibration relationship)

Elapsed Time _____ min

Operator _____

Comments: _____

Laboratory Calculations:

$\overline{Qstd}$ _____ Std m^3/min

$\overline{Qstd}$ = $\overline{Qa}$ (Pav/Pstd) (Tstd/Tav)

Vstd _____ std m^3

Vstd = ($\overline{Qstd}$) (Elapsed Time)

Gross Weight (Wg) _____ g

Tare Weight (Wt) _____ g

Net Weight (Wn) _____ g

PM10 Concentration _____ μg/std m^3

PM10 Concentration = (Wn) (10^6)/Vstd

Figure 15. Example VFC sampler field data sheet.

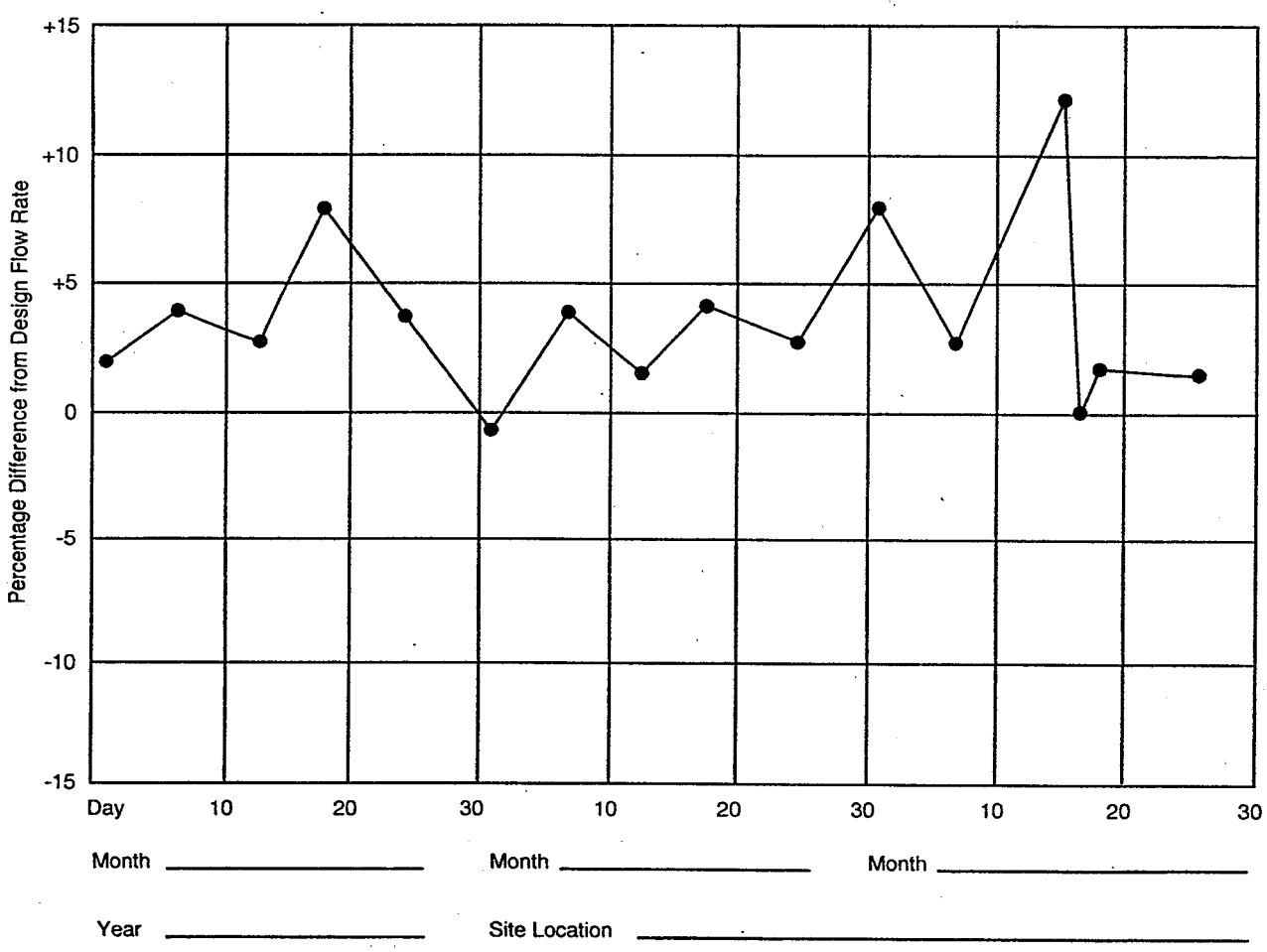

Figure 16. Field data control chart.

EPA/625/R-96/010a

Compendium of Methods for the Determination of Inorganic Compounds in Ambient Air

Compendium Method IO-2.2

SAMPLING AMBIENT AIR FOR PM_{10} USING A GRASEBY DICHOTOMOUS SAMPLER

Center for Environmental Research Information
Office of Research and Development
U.S. Environmental Protection Agency
Cincinnati, OH 45268

January 1997

Method IO-2.2

Acknowledgements

This Method is a part of *Compendium of Methods for the Determination of Inorganic Compounds in Ambient Air* (EPA/625/R-96/060a), which was prepared under Contract No. 68-C3-0315, WA No. 2-10, by Midwest Research Institute (MRI), as a subcontractor to Eastern Research Group, Inc. (ERG), and under the sponsorship of the U.S. Environmental Protection Agency (EPA). Justice A. Manning, Center for Environmental Research Information (CERI), and Frank F. McElroy, National Exposure Research Laboratory (NERL), both in the EPA Office of Research and Development, were the project officers responsible for overseeing the preparation of this method. Other support was provided by the following members of the Compendia Workgroup:

- James L. Cheney, Corps of Engineers, Omaha, NB
- Michael F. Davis, U.S. EPA, Region 7, KC, KS
- Joseph B. Elkins Jr., U.S. EPA, OAQPS, RTP, NC
- Robert G. Lewis, U.S. EPA, NERL, RTP, NC
- Justice A. Manning, U.S. EPA, ORD, Cincinnati, OH
- William A. McClenny, U.S. EPA, NERL, RTP, NC
- Frank F. McElroy, U.S. EPA, NERL, RTP, NC
- William T. "Jerry" Winberry, Jr., MRI, Cary, NC

This Method is the result of the efforts of many individuals. Gratitude goes to each person involved in the preparation and review of this methodology.

Author(s)

- William T. "Jerry" Winberry, Jr., Midwest Research Institute, Cary, NC

Peer Reviewers

- David Brant, National Research Center for Coal and Energy, Morgantown, WV
- John Glass, SC Department of Health and Environmental Control, Columbia, SC
- Jim Cheney, U.S. Army Corps of Engineers, Omaha, NB
- Margaret Zimmerman, Texas Natural Resource Conservation Commission, Austin, TX

DISCLAIMER

This Compendium has been subjected to the Agency's peer and administrative review, and it has been approved for publication as an EPA document. Mention of trade names or commercial products does not constitute endorsement or recommendation for use.

Method IO-2.2
Sampling of Ambient Air for PM_{10}
Using a Graseby Dichotomous Sampler

TABLE OF CONTENTS

	Page
1. Scope	2.2-1
2. Applicable Documents	2.2-2
2.1 ASTM Documents	2.2-2
2.2 Other Documents	2.2-2
3. Summary of Method	2.2-2
4. Significance	2.2-3
5. Definitions	2.2-3
6. Apparatus Description	2.2-5
6.1 General Description	2.2-5
6.2 Flow System	2.2-5
6.3 Control Panel	2.2-6
7. Apparatus Listing	2.2-6
8. Initial Calibration of Dichotomous Sampler Using a Mass Flow Controller	2.2-7
8.1 Scope	2.2-7
8.2 Significance	2.2-7
8.3 Summary of Calibrations	2.2-8
8.4 Calibration Procedure	2.2-8
9. Sampling Procedure	2.2-9
10. Interferences	2.2-10
11. Calculations And Record Keeping	2.2-10
12. Performance Criteria and QA	2.2-11
12.1 Flow Rates	2.2-11
12.2 Filter Quality	2.2-11
13. Field Flow Calibration Check of Dichotomous Samplers	2.2-11
13.1 Scope	2.2-11
13.2 Significance	2.2-12
13.3 Flow Check Procedures	2.2-12
14. Routine Maintenance	2.2-13
14.1 Sampling Module	2.2-13
14.2 Control Module	2.2-13
14.3 Refurbishment Procedures	2.2-15
15. References	2.2-17

Chapter IO-2
INTEGRATED SAMPLING OF SUSPENDED PARTICULATE MATTER (SPM)

Method IO-2.2
SAMPLING OF AMBIENT AIR FOR PM_{10} USING A GRASEBY DICHOTOMOUS SAMPLER

1. Scope

1.1 Suspended particulate matter (SPM) in air generally is a complex, multi-phase system of all airborne solid and low vapor pressure liquid particles having aerodynamic particle sizes from below 0.01-100 μm and larger. Historically, SPM measurement has concentrated on total suspended particulates (TSP), with no preference to size selection.

1.2 The U. S. Environmental Protection Agency (EPA) reference method for TSP is codified at 40 CFR 50, Appendix B. This method uses a high-volume sampler (hi-vol) to collect particles with aerodynamic diameters of approximately 100 μm or less. The hi-vol samples 40 and 60 ft^3/min of air with the sampling rate held constant over the sampling period. The high-volume design causes the TSP to be deposited uniformly across the surface of a filter located downstream of the sampler inlet. The TSP hi-vol can be used to determine the average ambient TSP concentration over the sampling period, and the collected material subsequently can be analyzed to determine the identity and quantity of inorganic metals present in the TSP.

1.3 Research on the health effects of TSP in ambient air has focused increasingly on particles that can be inhaled into the respiratory system, i.e., particles of aerodynamic diameter less than 10 μm (PM_{10}). Researchers generally recognize that these particles may cause significant, adverse health effects. Recent studies involving particle transport and transformation strongly suggest that atmospheric particles commonly occur in two distinct modes: the fine ($<2.5\mu$m) mode and the coarse (2.5-10.0 μm) mode. The fine or accumulation mode (also termed the respirable particulate matter) is attributed to growth of particles from the gas phase and subsequent agglomeration, while the coarse mode is made of mechanically abraded or ground particles. Particles that have grown from the gas phase (either because of condensation, transformation, or combustion) occur initially as very fine nuclei--0.05 μm. These particles tend to grow rapidly to accumulation mode particles around 0.5 μm, which are relatively stable in the air. Because of their initially gaseous origin, particle sizes in this range include inorganic ions such as sulfate, nitrate, ammonia, combustion-form carbon, organic aerosols, metals, and other combustion products. Coarse particles, on the other hand, are produced mainly by mechanical forces such as crushing and abrasion. Coarse particles, therefore, normally consist of finely divided minerals such as oxides of aluminum, silicon, iron, calcium, and potassium. Coarse particles of soil or dust mostly result from entrainment by the motion of air or from other mechanical action within their area. Since the size of these particles is normally >2.5 μm, their retention time in the air parcel is shorter than the fine particle fraction.

1.4 The procedure for sampling ambient air particulate matter using dichotomous samplers is described in this compendium method. The dichotomous sampler collects inhalable particles (i.e., particles <10 μm) and separates them by size, into coarse (2.5-10 μm) particles and fine (<2.5 μm) particles. The particles are collected on ring-mounted 37-mm diameter, Teflon® filters.

2. Applicable Documents

2.1 ASTM Documents

- D4096 *Application of the High Volume Sample Method for Collection and Mass Determination of Airborne Particulate Matter.*
- D1356 *Definition of Terms Related to Atmospheric Sampling and Analysis.*
- D1357 *Practice for Planning the Sampling of the Ambient Atmosphere.*
- D2986 *Method for Evaluation of Air Assay Media by the Monodisperse DOP (Dioctyl Phthalate) Smoke Test.*

2.2 Other Documents

- STP598 *Calibration in Air Monitoring.*
- U. S. Environmental Protection Agency, *Quality Assurance Handbook for Air Pollution Measurement Systems, Volume I: A Field Guide for Environmental Quality Assurance,* EPA-600/R-94/038a.
- U. S. Environmental Protection Agency, *Quality Assurance Handbook for Air Pollution Measurement Systems, Volume II: Ambient Air Specific Methods (Interim Edition),* EPA-600/R-94/038b.
- "Reference Method for the Determination of Particulate Matter in the Atmosphere," 40 CFR 50, Appendix J.
- "Reference Method for the Determination of Suspended Particulates in the Atmosphere (High Volume Method)," 40 CFR 50, Appendix B.
- EPA Project Summary Document (1).
- EPA Laboratory Standard Operating Procedures (2).
- Scientific Publications of Ambient Air Studies (3-9).

3. Summary of Method

3.1 Particles <10 μm are collected via a 10 μm inlet and separated into fine (<2.5 μm) and coarse (2.5-10 μm) fractions by a virtual impactor.

3.2 The particles enter the 10 μm inlet at a flow rate of 17.6 L/min. Constant air flow through the system is maintained by a series of rotameters.

3.3 In recent literature of ambient air particulate sampling and elemental analysis, the duration of sampling ranges from 12-24 h depending upon experimental design and amount of ambient particulate present.

3.4 The particles are collected on 37 mm diameter Teflon® filters. The filters should be free of pinholes and have a pore size of less than 2 μm.

3.5 The filters are transported from the sampling site to the laboratory in the Lexan® dichotomous filter holders. Once at the laboratory, they are analyzed by neutron activation analysis or X-ray fluorescence spectroscopy.

4. Significance

4.1 The area of toxic air pollutants has been the subject of interest and concern for many years. Recently the use of receptor models has resolved the elemental composition of atmospheric aerosol into components related to emission sources. The assessment of human health impacts resulting in major decisions on control actions by federal, state, and local governments are based on these data.

4.2 Inhalable ambient air particulate matter (< 10 μm) can be collected on Teflon® filters by active sampling using a dichotomous sampler. The dichotomous sampler collects particles in two size ranges: fine (<2.5 μm) and coarse (2.5-10 μm). The trace element concentrations of each fraction can be determined using a nondestructive energy dispersive X-ray fluorescence spectrometer (Inorganic Compendium Method IO-3.3) or neutron activation analysis (Inorganic Compendium Method IO-3.7).

5. Definitions

[Note: Definitions used in this document are consistent with those used in ASTM Methods. All pertinent abbreviations and symbols are defined within this document at point of use.]

5.1 Aerodynamic Diameter (a.d.). The diameter of a unit density sphere having the same terminal settling velocity as the particle in question. Operationally, the size of a particle as measured by an inertial device.

5.2 Aerosol. A dispersion of solid or liquid particles in gaseous media.

5.3 Ambient. Surrounding on all sides.

5.4 Calibration. The process of comparing a standard or instrument with one of greater accuracy (smaller uncertainty) to obtain quantitative estimates of the actual values of the standard being calibrated, the deviation of the actual value from a nominal value, or the difference between the value indicated by an instrument and the actual value.

5.5 10 μm Dichotomous Sampler. An inertial sizing device that collects suspended inhalable particles (< 10 μm) and separates them into coarse (2.5-10 μm) and fine (<2.5 μm) particle-size fractions.

5.6 Differential Pressure Meter. Any flow measuring device that operates by restricting air flow and measuring the pressure drop across the restriction.

5.7 Emissions. The total of substances discharged into the air from a stack, vent, or other discrete source.

5.8 Filter. A porous medium for collecting particulate matter.

5.9 Flowmeter. An instrument for measuring the rate of flow of a fluid moving through a pipe or duct system. The instrument is calibrated to give volume or mass rate of flow.

5.10 Gas Meter. An instrument for measuring the quantity of a gas passing through the meter.

5.11 Impaction. A forcible contact of particles of matter. A term often used synonymously with impingement.

5.12 Impactor. A sampling device that employs the principle of impaction (impingement).

5.13 Impingement. The act of bringing matter forcibly in contact. As used in air sampling, refers to a process for the collection of particulate matter in which the gas being sampled is directed forcibly against a surface.

5.14 Inhalable Particles. Particles with aerodynamic diameters of <10 μm that are capable of being inhaled into the human lung.

5.15 Interference. An undesired positive or negative output caused by a substance other than the one being measured.

5.16 Mass Flowmeter. Device that measures the mass flow rate of air passing a point, usually using the rate of cooling or heat transfer from a heated probe.

5.17 Matter. The substance of which a physical object is composed.

5.18 Orifice Meter. A flowmeter, employing as the measure of flow rate the difference between the pressures measured on the upstream and downstream sides of the orifice (that is, the pressure differential across the orifice) in the conveying pipe or duct.

5.19 Particle. A small discrete mass of solid or liquid matter.

5.20 Particulate. Solids or liquids existing in the form of separate particles.

5.21 ppb—a unit of measure of the concentration of gases in air expressed as parts of the gas per billion (10^{-9}) parts of the air-gas mixture, normally both by volume.

5.22 Precision. The degree of mutual agreement between individual measurements, namely repeatability and reproducibility.

5.23 Pressure Gage. The difference in pressure existing within a system and that of the atmosphere. Zero gage pressure is equal to atmospheric pressure.

5.24 Rotameter. A device, based on the principle of Stoke's law, for measuring rate of fluid flow. It consists of a tapered vertical tube having a circular cross section, and containing a float that is free to move in a vertical path to a height dependent upon the rate of fluid flow upward through the tube.

5.25 Sampling. A process consisting of the withdrawal or isolation of a fractional part of a whole. In air or gas analysis, the separation of a portion of an ambient atmosphere with or without the simultaneous isolation of selected components.

5.26 Standard. A concept that has been established by authority, custom, or agreement to serve as a model or rule in the measurement of quantity or the establishment of a practice or procedure.

5.27 Traceability to NIST. Documented procedure by which a standard is related to a more reliable standard verified by the National Institute of Standards Technology (NIST).

5.28 Uncertainty. An allowance assigned to a measured value to take into account two major components of error: The systematic error and the random error attributed to the imprecision of the measurement process.

5.29 Virtual Impaction. Impaction of particles on stagnant air rather than a solid plate. A virtual sampler is one in which particle size separation is accomplished by impaction into an air stream of differing velocity rather than onto an impaction surface.

6. Apparatus Description

6.1 General Description

The dichotomous sampler described throughout this method is the Graseby Dichotomous Sampler, 500 Technology Court, Smyrna, GA 30082 (800) 241-6898. This sampler is a low-flow rate (16.7 L/min) sampler that divides the air stream passing the 10 μm inlet into two portions that are filtered separately. The samplers cut the 0- to 10-μm total sampler into 0- to 2.5-μm (fine) and 2.5- to 10-μm (coarse) fractions that are collected on separate 37-mm diameter Teflon® filters. The sampler (see Figure 1) consists of two modules: the sampling module and the flow control module. Specifications for the Graseby Dichotomous Model 244 sampler are given in Table 1.

6.2 Flow System

Particle-laden air passing through the fractionating inlet of the dichotomous sampler is forced to take a sharp turn upon entry. Because of their greater mass (inertia), most large particles (>30 μm) cannot make this turn into the cap and continue to move in their original direction. The impactor-type aerosol inlet of the dichotomous sampler is illustrated in Figure 2. In an inlet designed for a 10-μm separation, particles >10 μm in diameter do not make the turn into the internal inlet. The Graseby dichotomous sampler currently samples particles in the range of <10 μm. The application of the design in dichotomous samplers to divide the aerosol into a coarse fraction (2.5-10 μm) and a fine fraction (<2.5 μm) by means of the virtual impactor technique is illustrated in Figure 3. After passing through

the inlet, the air containing inhalable particles is forced to pass through an acceleration jet and then around a lower jet having a lower velocity air flow. Most of the fine particles do not follow the high-velocity flow stream (15.0 L/min) and are captured on the fine particle filter. This particular design is called "virtual impaction" because the particles impact on a slowly pumped (1.67 L/min) void rather than on a solid plate. The coarse-particle flow, 1.67 L/min, is controlled by its flow selector valve, which feeds into the inlet of the pump. The coarse and fine flows are relatively constant except for small decreases that can occur during sampling.

6.3 Control Panel

The control panel is behind a weathertight door and contains vacuum gauge, rotameters, elapsed time meter, and timer. The control module for the dichotomous sampler is illustrated in Figure 4. The functions of the various displays and controls are described below.

6.3.1 Flow Control and Measurement. Flow control valves and rotameters are provided for setting the total- and coarse-particle flow rates. Vacuum gauges measure the pressure drop across the filters collecting the fine and coarse particles.

6.3.2 Timer. The sampler is equipped with a 7-day mechanical timer. The timer is divided into seven segments, each representing a day of the week. Each day segment is marked with the hours of the day. An "on" and an "off" tripper are positioned to the desired day of week and time of day for sampler operation.

6.3.3 Elapsed Time Meter. The elapsed time meter indicates the total time that the sampler has actually operated.

7. Apparatus Listing

[Note: The following list of equipment is specific for the Graseby Dichotomous Model 244 Dichotomous Sampler, (equipped with the Graseby PM_{10} inlet, Graseby, 500 Technology Court, Smyrna, GA 30082 (800) 241-6898.]

7.1 Sampling Module

7.1.1 Graseby PM_{10} Fractionating Inlet. Separates particles of >10 μm and prevents them from entering the system, Graseby, 500 Technology Court, Smyrna, GA 30082 (800) 241-6898.

7.1.2 Dichotomous Sampler Module. Separates particles into a coarse fraction (2.5-10 μm) and a fine fraction (<2.5 μm) Graseby, 500 Technology Court, Smyrna, GA 30082 (800) 241-6898

7.1.3 Vacuum Pump. Diaphragm type 1/4 hp, best source.

7.1.4 Vacuum Gauge. $\pm 10\%$ accuracy, best source.

7.1.5 Rotameter. $\pm 1.5\%$ accuracy at 1 m^3/hr flow rate, best source.

7.1.6 Elapsed Time Indicator.

7.1.7 Timer. Mechanical, 7-day, double pole, double throw. Accuracy ± 15 min per 24 h, best source.

7.1.8 Filters. 37 mm Teflon®, 2 μm pore size, ring-mounted, best source.

7.1.9 Interconnecting Tubing. 10 m long, 3/8" o.d. for fine-particle flow, 1/4" o.d. for coarse-particle flow, best source.

7.1.10 Filter Holders. Circular, Polyolefin or Lexan®, 1.750" o.d. , best source.

7.2 Calibration Modular (see Figure 5)

7.2.1 Transfer Standards. Mass flowmeter, dry gas meter, or other flow-measuring devices traceable to NIST and capable of accurately (±2% at the 95% confidence level) measuring flows over the ranges of 0-20 L/min and 0-5 L/min, best source.

7.2.2 Barometric Pressure Gauge. A barometer capable of measuring barometric pressure to the nearest 5 mm Hg (0.5" H_2O), best source.

7.2.3 Timer. Timer (if dry gas meter is used as flow measuring device) capable of measuring 0.1 s for time intervals of 30 s up to several minutes, best source.

7.2.4 Filters. A set of filters identical to those used to collect samples in the field, best source.

7.2.5 Miscellaneous. An adapter to connect the orifice device to the inlet of the sampler; flexible tubing to connect the ports of the orifice device to the ports of the manometer and the inlet of the sampler to the mass flowmeter.

8. Initial Calibration of Dichotomous Sampler Using a Mass Flow Controller

8.1 Scope

Dichotomous samplers are calibrated using flow measurement devices (mass flowmeters and dry test meters) that have been referenced to a positive displacement volume standard traceable to the National Institute of Standards and Technology (NIST).

8.2 Significance

8.2.1 Each sampler and each field calibration check orifice device is calibrated for a specific site. The average site barometric pressure is calculated from the site elevation or based on measured values. Calibration data for both sampler rotameters and calibration check orifice devices are calculated from the seasonal average site barometric pressure and temperature for the period during which the sampler is operating.

8.2.2 Flow rate calibrations are expressed in terms of volumetric flow rates at ambient conditions because the sampler's cutpoints depend on a fixed actual flow rate, not a fixed flow at standard conditions.

8.2.3 The sampler's rotameter calibration must be within 10% of the total flow rate indicated by the calibration flow check orifice.

8.2.4 Calibrations of the sampler rotameters and the field calibration check device are traceable to the NIST via the following procedure. Primary standards such as bubble flowmeters, spirometers, and frictionless pistons certified by NIST are used to calibrate the mass flowmeter and dry gas meter as transfer standards that, in turn, are used to calibrate the sampler's rotameters and the field calibration check device. Records of all calibrations should be kept on file.

8.3 Summary of Calibrations

Each dichotomous sampler's rotameters must be calibrated before being shipped to the field. A Field Flow Check Orifice is calibrated and shipped with the sampler(s) for performing calibration checks in the field. Sampler rotameter calibrations are performed when the sampler's calibration is out of specification.

8.4 Calibration Procedure

The sampling system is set up in its normal operation configuration with a calibrated flow measuring device connected in place of the fractionating inlet to the sampling module (see Figure 5). Clean filters should be installed in the sampling module, and all front panel toggle switches on the control module should be switched off.

8.4.1 Turn on the sampler and mass flowmeter (if used) and allow them to warm up to operating temperature (about 5 min). Fully open the control valves for both rotameters (counterclockwise).

8.4.2 Fill in pertinent information on the Dichotomous Transfer Standard Calibration Form (see Figure 6). Leak the check system according to Section 14.3.3.1.

8.4.3 Close the control valve on the coarse rotameter. Ensure that the throttle valve on the inlet arrangement is fully open.

8.4.4 Adjust the flow rate through the total rotameter to the first rotameter ball setting as observed from the Dichotomous Flow Orifice Calibration Curve (see Figure 6) by using the manometer reading on the x-axis. Observe the flow rate from the mass flowmeter (or dry gas meter) and record next to the rotameter setting under the total rotameter section of the data sheet.

[Note: The mass flowmeter or dry gas meter may have correction factors supplied with them. Multiply the mass flowmeter reading by the correction factor and record as "corrected flow." If a dry gas meter is used, the volume of air passing through the meter must be timed. The volume of air through the meter divided by the time required yields the flow rate. Correct this flow rate to standard conditions (25°C and 760 mm Hg). Enter this volume as corrected flow.]

8.4.5 Repeat Section 8.4.4 for each additional total rotameter point listed on the data sheet.

8.4.6 Reset the flow rate through the total rotameter to 16.7 L/min using the current calibration table and turn the sampler off.

8.4.7 Disconnect the 3/8-in. o.d. tubing from the fine particle side of the filter holder and install a plug fitting on the holder.

8.4.8 Turn the sampler on and adjust the flow through the coarse rotameter to the first rotameter setting listed on the Dichotomous Transfer Standard Calibration Form, Figure 7. Record the corresponding flow rate as measured by the mass flow meter or dry gas meter.

8.4.9 Repeat Section 8.4.8 for each coarse rotameter setting listed on the data sheet.

8.4.10 Reset the flow rate through the coarse rotameter to 1.67 L/min using the current calibration table and turn the sampler off.

8.4.11 Remove the plug fitting installed in Section 8.4.7 and re-connect the 3/8-in. o.d. tubing to the filter holder.

8.4.12 Develop calibration tables for the total and coarse rotameters by linear regression and maintain with the sampler for future reference.

9. Sampling Procedure

9.1 Ensure that the sampling module is clean and free of particulate deposition on its inner surfaces. Ensure the bug screen is clean as documented in Section 14.

9.2 Loosen the knurled filter holder ring nut for the coarse particulate flow and lower the filter holder. The coarse particulate filter holder has 1/4" o.d. tubing and is aligned with the center of the virtual impactor head and aerosol inlet. Remove a Lexan® filter cassette containing a preweighted filter from its plastic container and install it on the support screen in the filter holder. The lower half of the cassette (the side having the shortest distance to the filter surface) goes on the screen. Ensure that the filter holder O-ring is in place. Raise the filter holder into place and tighten the knurled ring nut. Mark "COARSE" or "C" on the plastic container from which the filter cassette was removed.

9.3 Loosen the knurled filter holder ring nut for the fine particulate flow and lower the filter holder. The fine particulate filter holder has 3/8" o.d. tubing and is offset from the center line of the virtual impactor head and aerosol inlet. Remove a preweighted filter cassette from its plastic container and install it on the support screen. Ensure that the filter holder O-Ring is in place. Raise the filter holder into place and tighten the knurled ring nut. Mark "FINE" or "F" on the plastic container from which the filter cassette was removed.

9.4 Open the front cover to the closure of the control module. The latch is opened by turning the knob counterclockwise and released by turning the indicator one-quarter turn counterclockwise; it is locked by reversing this process.

9.5 Turn the mechanical timer switch to "off."

9.6 Connect the main power cord to line voltage. Leak check the system as illustrated in Section 14.3.3.1.

9.7 Ensure that the flow selector valve on the bottom of the total rotameter is open.

9.8 Turn the mechanical timer switch to "on."

9.9 Set the total flow rate by adjusting the flow control valve to a reading on the total rotameter that will give an ambient flow rate of 0.0167 m^3/min (17.6 L/min), as determine by a previous calibration of the sampler. Record the rotameter set point on the project data sheet. The vacuum gauge will read approximately 1-2" Hg for a 2-3 μm pore size Teflon® filter. The flow control valve will require only slight adjustment between sampling periods.

9.10 Set the coarse flow rate by adjusting the flow control valve to a reading on the coarse rotameter that will give an ambient flow rate of 0.00167 m^3/min (1.67 L/min), as determined by a previous calibration of the sampler. Record the rotameter set point on the Dichotomous Field Test Data Sheet (see Figure 8). The vacuum gauge will read approximately zero. The flow control valve will require only

minor adjustment between samples. A Coarse Rotameter Calibration Table should be developed for each sample based upon most recent calibration curves.

9.11 Turn the mechanical timer switch to "off." Set the correct time by rotating the dial until the correct day and time of day appear at the red pointer. Position the "on" tripper to the day and time of day that the unit is to begin sampling. Position the "off" tripper to the day and time of day that the unit is to stop sampling. Reset the elapsed time indicator to 0000.00 min by pressing the reset button. Close the front cover of the control module. The unit is ready to sample.

9.12 After the sampling period is over, turn the sampler on and allow it to run approximately 5 min. Record the final total and coarse rotameter readings on the Dichtomous Field Test Data Sheet. Turn the sampler off.

9.13 Remove the exposed filter cassette from the coarse flow filter holder and return it to the plastic container from which it originally came. Record the filter number on the Dichotomous Field Test Data Sheet.

9.14 Remove the exposed filter cassette from the fine flow filter holder and return it to the plastic container from which it originally came. Record the filter number on the Dichotomous Field Test Data Sheet.

9.15 Ship both filters, along with a chain-of-custody, back to the laboratory for gravimetric and elemental analysis.

10. Interferences

The dichotomous sampler should only be operated at the flow rate mentioned in Section 6.2 otherwise particle size fractionation will be inaccurate.

11. Calculations And Record Keeping

11.1 Information pertaining to the identification of the filters and the operation of the sampler should be recorded on the Dichotomous Field Test Data Sheet. Pertinent information that should be recorded on any data sheet is as follows:

- Sampling site.
- Sampler identification number.
- Coarse rotameter reading that provides an ambient flow of 0.00167 m^3/min.
- Total rotameter reading that provides a flow of 0.0167 m^3/min.
- Date of sampling.
- Coarse filter identification.
- Fine filter identification.
- Coarse rotameter reading at the end of sampling.

- Total rotameter reading at the end of sampling.
- Time of sampler operation.
- Comments about sampler and sample period.

11.2 Information should be recorded in a diary format in an instrument logbook. This log should indicate the time and nature of maintenance, periods when samplers are out of service and the reason, dates of field calibration flow checks and QC checks, and unusual occurrences such as power outages, dates of sampler replacements, and operating personnel changes. This log will be used to help identify unusual trends or patterns that may be site-, operator-, or sampler-induced.

11.3 The following data are obtained by calculations of the collected values acquired in Section 9.

11.3.1 Average Coarse Rotameter Reading. This reading is determined by adding the beginning coarse rotameter reading to the final coarse rotameter reading and dividing by 2. Look up the coarse rotameter reading on the Coarse Rotameter Calibration Table for the corresponding standard flow rate (in m^3/min).

11.3.2 Average Total Rotameter Reading. This reading is determined by adding the beginning total rotameter reading to the final total rotameter reading and dividing by 2. Look up the average total rotameter reading on the Total Rotameter Calibration Table for the corresponding standard flow rate (in m^3/min).

11.3.3 Fine Average Flow. Subtract the coarse flow rate from the average total flow rate.

11.3.4 Percent Error. Subtract the orifice flow rate (m^3/min) from the total sampler flow rate (m^3/min) and divide by the orifice flow rate (m^3/min).

11.3.5 QC Flowcheck. Add 100 to the percent error to obtain the QC flowcheck percent.

12. Performance Criteria and QA

12.1 Flow Rates

12.1.1 Decreases in flow rate during sampling of >10% from the initial setpoint will require that the unit be checked for performance.

12.1.2 Changes in flow rate calibration of >10%, as determined by a field calibration check, will require that the unit be checked for performance and recalibrated.

12.2 Filter Quality

Any filter that is obviously damaged (i.e., torn or frayed) should be voided.

13. Field Flow Calibration Check of Dichotomous Samplers

13.1 Scope

During routine operation of a dichotomous sampler, a flow calibration check should be performed periodically to assure sample accuracy and equipment performance. The check is made by installing an

orifice device (calibrated over the operating range of the total rotameter) on the inlet to the sampler, as illustrated in Figure 5, without the mass flow controller.

13.2 Significance

Changes in flow rate calibration of >10%, as determined by a field calibration check, will require that the sampler unit be checked for performance and recalibrated.

13.3 Flow Check Procedures.

13.3.1 Apparatus Listings. The following equipment is required for a field calibration check:

- Calibrated orifice (see Figure 5).
- Audit orifice calibration table or developed curve.
- Dichotomous sampler total and coarse rotameter calibration tables.
- Water or red oil manometer calibrated in inches of water (range should be 0-16" H_2O).

13.3.2 Procedure.

13.3.2.1 Install clean filters in the sampling module as described in the operating procedure.

13.3.2.2 Remove the inlet to the sampling module and install the flow check orifice. Connect the tubing from the manometer to the ports on the orifice. Open fully both ports on the manometer and align the zero on the scale with the water or oil level in the manometer.

13.3.2.3 Turn on the sampler and allow it to warm up to operating temperature (approximately 5 min).

13.3.2.4 Open both total and coarse flow control valves fully counterclockwise. Adjust both the total and coarse rotameters to their respective seasonal setpoints that will provide a total flow of 0.0167 m^3/min (16.7 L/min) and a coarse flow of 0.00167 m^3/min (1.67 L/min). Use the total and coarse (ambient) rotameter calibration tables. Record the total rotameter reading and the corresponding flow rate (0.0167 m^3/min) on the Dichotomous Flow Check Data Sheet (see Figure 9).

13.3.2.5 Record the orifice serial number and its calibration date on the Dichotomous Flow Check Data Sheet. Observe and record the manometer reading. Find the manometer reading on the orifice calibration table and record the corresponding ambient flow rate in cubic meters per minute (m^3/min).

13.3.2.6 Turn off the sampler, remove the orifice device, and replace the inlet to the sampling module.

13.3.2.7 Remove the flow check filters from the sampling module.

13.3.3 Calculations. Calculate the percent error by using the information above in the formulas provided on the Dichotomous Flow Check Data Sheet. Calculate the value on the Flow Check Data Sheet.

13.3.4 Performance Criteria and QA. If the calculated quality control (QC) Check % is within ±10% of the 0.0167 m^3/min total flow rate, the sampler is operating properly. A calculated QC Check % not within ±10% of the 0.0167 m^3/min total flow rate indicates that there is a leak or other malfunction. The sampler must be examined, tested, and, if necessary, recalibrated.

14. Routine Maintenance

[Note: Step-by-step instruction for maintaining and repairing the sampler are provided in this procedure. Information for disassembling, cleaning, replacing, and repairing each component of the sampler is provided.]

14.1 Sampling Module

14.1.1 All parts are sealed with O-rings. Internal particulate deposits accumulate primarily on the outer and inner surfaces of the tip of the receiver tube in the virtual impactor head. The receiver tube should be inspected periodically for such particulate deposits and cleaned as required. The receiver tube should be cleaned every 3-4 months. The remaining inner surfaces should be cleaned every 6-12 months. Cleaning should be done with alcohol or water using a camel's-hair brush. Disassembly and internal cleaning should normally not be attempted in the field.

14.1.2 The diametral O-rings in the aerosol inlet and the flow-splitting chamber should be conditioned periodically with vacuum grease (see Figure 2).

14.1.3 The bug screen in the aerosol inlet should be cleaned periodically during the summer months. A diametral O-ring in the aerosol inlet acts as the seal.

14.1.4 Sampler connector tubing should be examined periodically and replaced as necessary (see Figure 3).

14.1.5 Recalibration is required if the unit is disassembled for cleaning or if a field flow check reveals that the unit is out of limits. Clean the sampling module as follows:

14.1.5.1 Dismantle and clean the 10-μm inlet assembly by removing four Phillips head screws and wiping out the interior with the cleaner and paper towels. Allow the unit to dry, then carefully reassemble.

14.1.5.2 Dismantle and clean the main sample head by following these steps:

- Mark each assembly point of the sample inlet with pen or pencil to provide "match marks" during reassembly.
- Disassemble the unit, taking care to retain all O-rings and miscellaneous parts.

[Note: Many of the assembly screws may appear frozen, in which case pliers or penetrating oil may be required.]

- Clean all interior surfaces with the general-purpose cleaner, paying particular attention to small openings and crevices. Cotton swabs or a small brush are helpful in these areas. Completely dry all components.
- Reassemble the unit in accordance with the previously scribed match marks. Take particular care to ensure that all O-ring seals are properly seated and that all screws are uniformly tight.

14.2 Control Module

[Warning: Unplug the line power cord from its receptacle before removing the front panel of the Graseby Model 244 control module enclosure.]

14.2.1 Filter Elements. After approximately 12-24 months of sampling, the vacuum pump jar filters for the coarse and fine particle flows may need replacement. In normal operation, air entering these jars is filtered by the two 17-mm membrane filters in the sampling module. Hence, jar filter replacement is infrequent. To replace these filters, unplug the line power cord and remove the front panel of the control module by removing the 6 screws. The filter jar from the coarse-particle flow is the small jar (approximately 2.5" dia. x 3" long) in the upper left side of the enclosure. Unscrew the jar, remove the old filter element, and replace with a new element. Tighten the jar very tightly when installing, to avoid leaks. The fine-particle filter jar is behind the coarse-particle filter jar. It is approximately 3" dia. x 5" long and is the one closest to the bulkhead fitting on the side of the enclosure.

14.2.2 Vacuum Pump. The diaphragm of the vacuum pump should be replaced routinely at 1-yr intervals or if sampler vacuum is suddenly reduced and a leak check indicates there are no leaks in the system. To replace the diaphragm, unplug the line voltage and remove the front panel (see Figure 4). Remove the finned head of the pump by removing the 6 head screws. Remove the four diaphragm plate hold-down screws and change the diaphragm. To reassemble, reverse the procedure, making sure that the screw clearance cavity in the plate is lined up under the intake valve screw heads and that all head screws are tightened evenly. Clean the control module as follows (see Figure 4):

14.2.2.1 Ensure that power is disconnected from the unit. If compressed air is available, open the unit and blow out loose dust and dirt.

14.2.2.2 Wipe down all surfaces with the general-purpose cleaner and towels. Make note of any obvious problems in the unit and take action to correct them before completion of cleaning.

14.2.2.3 Check rotameters for cleanliness. If they are dirty or contain water, they must be removed and cleaned. (If water is found, the interior of the vacuum pump may be damaged. It will have to be opened for inspection and possible repair.) Rotameters are cleaned by the following steps:

- Remove the tubing from the total rotameter output port and any other connected tubing that may prove too inflexible to allow removal of the rotameters.
- Remove the four screws securing the rotameter assembly to the front panel.
- Slip the assembly back from the front panel to gain access to the allen screws in the tops of the rotameters. Remove the protective covers from each rotameter.
- While holding the glass rotameter with one hand, loosen the large allen screws just enough to allow removal of the unit. Repeat for each unit.
- Clean the two rotameters with the cleaner, followed by a thorough rinsing in distilled water. (To properly clean the unit, remove the float and its retainers. The retainers are easily removed with the aid of a wire hook fashioned from a paper clip.)
- Allow the tubes to dry thoroughly. Then reassemble.

14.2.2.4 Remove and clean all filter jars (check each for possible cracks and replace if necessary). Clean or replace all dirty filter elements.

14.2.2.5 Clean the fan's blades and housing. Observe the housing for any dirt buildup that could cause the fan to lock up.

14.2.2.6 Clean exterior surfaces of the unit, ensuring that all cooling vents are open. Check all mounting brackets to ensure that they are tight and in good repair.

14.2.2.7 When all cleaning operations and necessary repairs are completed, close the module and reconnect the sample module to allow performance of leak and calibration checks.

14.3 Refurbishment Procedures

Step-by-step instruction for refurbishing samplers that may have been operated in the field for extended periods are described in this procedure. Information is provided for disassembling, cleaning, replacing, and repairing each component of the sampler.

14.3.1 Control Module.

14.3.1.1 Using a general household cleaner, clean all exterior surfaces of the module (see Figure 4). Observe the general condition of the cabinet and hardware items. Any damaged or missing components must be replaced before the unit is returned to service.

14.3.1.2 Open the front door of the unit and clean the interior surfaces. Examine the front panel for the presence of water in the rotameters. (If any water is present, the vacuum pump must be inspected for interior water damage.)

14.3.1.3 Using a combination of cleaner and compressed air, clean all interior surfaces of the unit. Remove, clean, and replace all filter jars and media. Replace any damaged components.

14.3.1.4 Remove and clean both rotameters by removing the 4 bracket screws, disconnecting necessary tubing, and pulling the assembly free. Remove each glass tube by loosening the allen screw at the end of each rotameter. Remove the white stops and ball floats from the glass rotameters. Flush out the rotameters with distilled water; then swab them out with a soft tissue and set aside to dry thoroughly before reinstallation.

Caution: Be sure to check the cooling fan. It tends to collect dust, and if the buildup is sufficient, the blades will bind and subsequently destroy the fan. Screens are available to filter out this dust and should be installed if possible during the refurbishment process.

14.3.1.5 Check all electrical wiring and connections. Replace any frayed or damaged components.

Caution: If water was initially observed in the rotameters, check the vacuum pump for water damage by removing the cylinder head and valve plate and removing any moisture or corrosion.

14.3.1.6 Reassemble rotameters (only if they are completely dry) and reinstall them in the unit. Make a final check of all plumbing to ensure that reconnections have been made properly and that all fittings are tight.

14.3.1.7 Temporarily secure the front panel of the module and perform a brief operational check as follows:

- Connect power to the unit and manually turn on sampler.
- Advance flow control valves and observe rotameters for smooth operation throughout their range.

Caution: If the sampler is equipped with a filter overload switch, it must be turned off or disabled (by removing one of the relay coil wires) before a leak or performance test can be done.

- Leak-test the unit by capping off the tubing inlet ports and observing the vacuum gauges for a maximum reading.
- Once a maximum has occurred, turn off the sampler and observe the rate of decrease in vacuum readings. A slow, gradual decrease requiring 60 s or more to reach a minimum is the mark of a good system. A rapid decline indicates a leakage problem that should be investigated.

[Note: Filter jars are often leakage areas, and some pumps tend to leak. A leaky pump can be identified by plugging the output port immediately after turning off power to the unit. If the rate of decline is slowed, then the system is acceptable.]

14.3.2 Sample Module. This assembly initially should be inspected for any damaged or missing components. Attention should be given to all hardware items at this point; penetrating oil may need to be applied to selected hardware to disassemble the units for cleaning. Actual disassembly and cleaning should proceed as follows:

14.3.2.1 Disassemble the unit as shown into various subassemblies.

14.3.2.2 Using general-purpose household cleaner, clean all interior surfaces, paying special attention to the various small nozzles and openings in the various components. Rinse with distilled water and dry thoroughly.

14.3.2.3 Inspect all seals in the unit and replace any questionable ones. Pay special attention to those that seal the filer cassettes.

14.3.2.4 Reassemble the module, using stainless steel hardware to replace all defective screws.

14.3.2.5 Disassemble and clean the 10-μm inlet. To disassemble the inlet, unscrew the 3" diameter outer-tube containing the impaction chamber. Clean all interior surfaces. Inspect and replace the O-ring seal, if necessary, and reassemble the unit. The precipitation trap should be removed and cleaned at the same time.

14.3.3 Operational Tests. The following procedure provides tests to determine if the sampler is ready for field operation. The sampling system should be set up in its normal operating configuration with a calibrated flow measuring device connected in place of the inlet hat (see Figure 5). Clean filters should be inserted in the sample module, and all front panels toggle switches on the control module should be switched off. Required environmental data should be recorded on the data sheet and, before actual calibration, the following preliminary system tests should be performed.

14.3.3.1 System Leak Test. Open both rotameters (counterclockwise). Apply power to the sampler and, after the unit reaches full flow, close the throttle valve on the sample inlet tube. Once a maximum indication on the total vacuum gauge is observed, shut off power to the unit, record the maximum reading on the data sheet, and observe the vacuum gauges' rate of decline.

[Note: Leak-free systems should indicate a vacuum of 23" Hg or more, and the rate of decline to 0 indication should require 60 s or more. If these conditions are not met and the control module was successfully leak-tested previously, a leak exists either in the interconnecting tubing or the sample module.]

14.3.3.2 Pump Performance Check. With conditions as in the system leak test, open the throttle valve and apply power to the unit. Once stable flow is achieved, adjust the valve to give an actual flow through the system of 16.7 L/min (0.0167 m^3/min). Observe and record on the maintenance sheet the indicated total vacuum gauge indication.

[Note: A good pump should give an indication of 17.25" Hg or more. Readings lower than this value indicate possible pump diaphragm or reed valve problems, which should be checked at this time.]

14.3.3.3 Filter Overload Test. If this option is present (identified by a relay mounted on back of the clock timer and a black plastic transducer plumbed into the total vacuum gauge), it should be tested by opening the inlet throttle valve and switching the device on. With the sampler energized, slowly close off the throttle valve while observing the total vacuum gauge. The overload feature should shut down the system when approximately 15" of vacuum is reached.

15. References

1. Dzubay, T.G., *Development and Evaluation of Composite Receptor Methods*, EPA Project Summary, EPA-600/3-88-026, U. S. Environmental Protection Agency, Research Triangle Park, NC, 27711, September 1988.

2. *Inhalable Particulate Network Operations and Quality Assurance Manual*, Office of Research and Development, Environmental Monitoring Systems Lab, U. S. Environmental Protection Agency, Research Triangle Park, NC, 27711, May 1980.

3. Bevington, P.R, *Data Reduction and Error Analysis for the Physical Sciences*, McGraw-Hill Book Co., New York, NY.

4. Dzubay, T.G., "Chemical Element Balance Method Applied to Dichotomous Sampler Data," *Annals of the New York Academy of Sciences*, 1980.

5. Goulding, F.S., and Jaklevic, J.M., *Fabrication of Monitoring System for Determining Mass and Composition of Aerosol as a Function of Time*, U. S. Environmental Protection Agency, Research Triangle Park, NC, 27711, EPA 650/2-75-041, June 1975.

6. Hodges, M.G., and Wright, E.W., *Intercomparison of High-Volume, PM_{10}, and Dichotomous Particulate Matter Samplers at a Site with Low Particulate Matter Concentrations*, Environmental Science and Engineering, Inc., Gainesville, FL, September 1987.

7. *NIST Standard Reference Materials Catalog, National Institute of Standards and Technology*, Publ. 260, U.S. Department of Commerce, Washington, DC, p. 64, June 1986.

8. *Operating Procedure for the Sierra Series 244E Dichotomous Sampler Equipped with the Andersen Andersen Model 246B PM_{10} Inlet*, Environmental Monitoring Systems Lab, Office of Research and Development, U. S. Environmental Protection Agency, Research Triangle Park, NC, 27711, May 1980.

9. Stevens, R.K., and Dzubay, T.G., *"Dichotomous Sampler - A Practical Approach to Aerosol Fractionation and Collection,"* EPA 600/2-78-112, Environmental Monitoring Systems Lab, Office of Research and Development, U. S. Environmental Protection Agency, Research Triangle Park, NC 27711, June 1978.

TABLE 1. SPECIFICATIONS FOR THE GRASEBY MODEL 244 DICHOTOMOUS SAMPLER

Item	Specifications
Collection efficiency	Mass median diameter at 50% collection efficiency for equivalent spherical particles at 1 g/cm^3 is 2.5 μm
Internal losses	Maximum value over range of 0-20 μm is <1-2% and occurs at 2.5 μm. Average loss for all particles is <1%.
Flow rates	Total flow: 1 m^3/h, or 16.7 L/min; Fine-particle flow: 0.9 m^3/h,, or 15.0 L/min; Coarse-particle flow: 0.1 m^3, or 1.67 L/min.
Flowmeters	Precision rotameters, $\pm$1.5% accuracy at above flows.
Concentration ratio	10:1.
Vacuum pump	Diaphragm type, split phase motor, 1/4 hp.
Timer	Mechanical, 7-day, double pole, double throw, 120 volt, 60 Hz. Accuracy: $\pm$15 min in 24 h.
Elapsed time indicator	9999.99 min; resettable.
Filter media	37-mm membrane or glass fiber; Teflon® membrane media recommended.
Filter holder	Circular, polyolefin, 1.750" o.d.
Interconnecting tubing	10 m long; 3/8" o.d. for fine-particle flow; 1/4" o.d. for coarse-particle flow.
Aerosol inlet	10 μm nominal cutpoint over approximately 0-20km/h wind speed range; includes bug screen.
Power required	115 V a.c. $\pm$15%, 50-60 Hz, 200 W.
Overall dimensions	Control module: 16" H x 11" W x 22" L; sampling module: 40" H x 25.63" diam. tripod base bolt circle.
Net weight	Control module: 50 lb; sampling module: 15 lb.
Total shipping weight	85 lb.

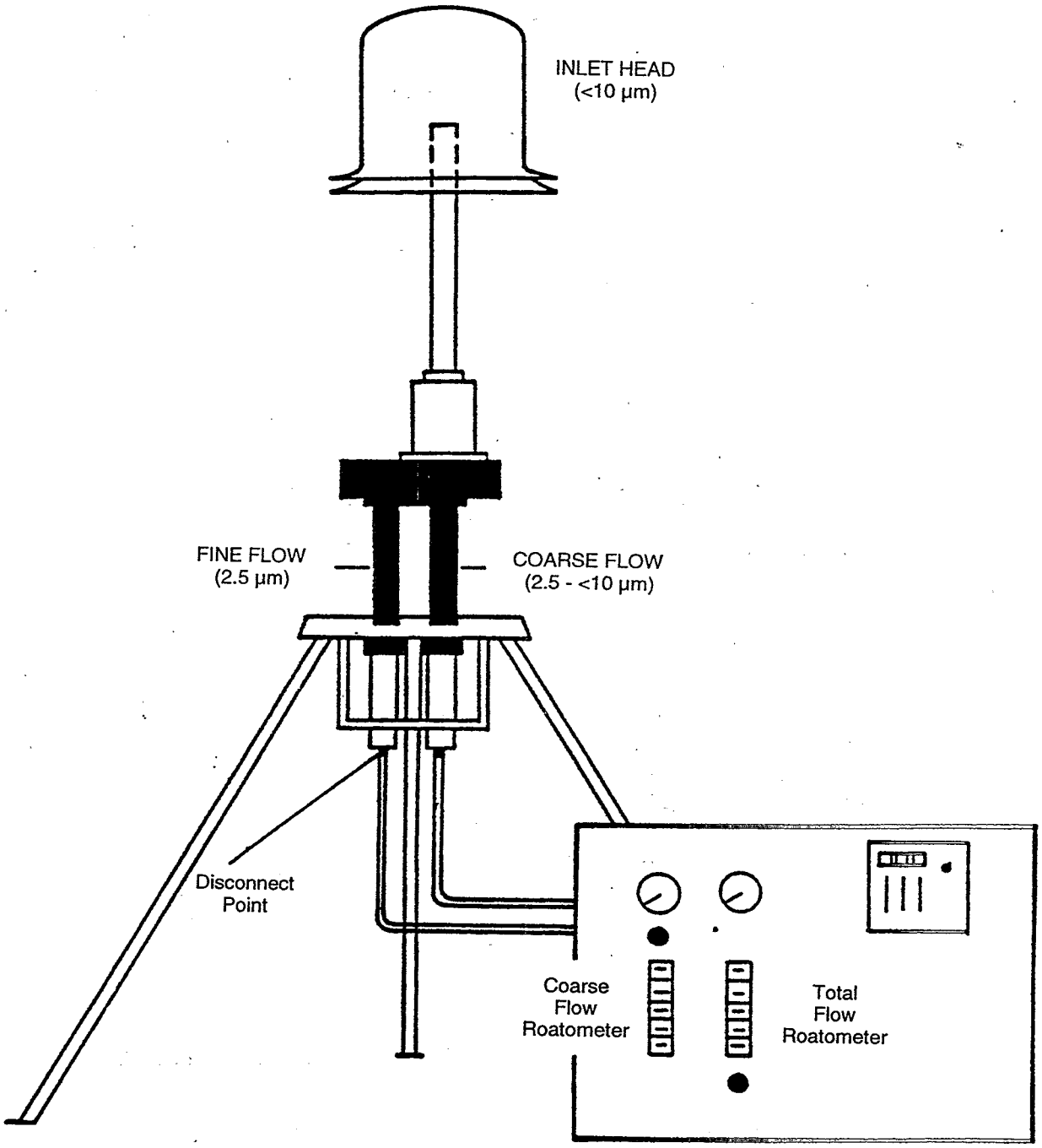

Figure 1. Graseby Model 244 dichotomous sampler.

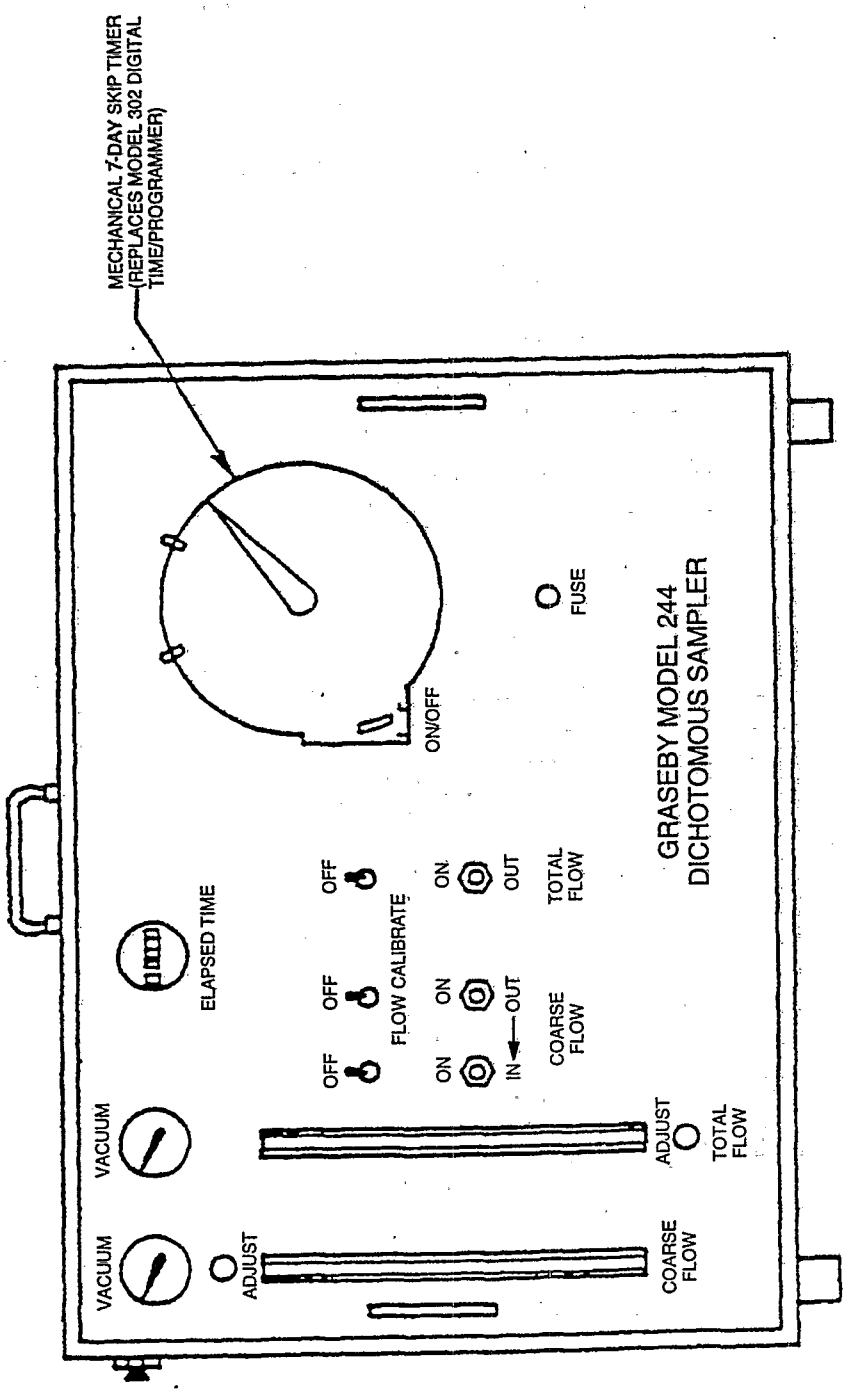

Figure 4. Control module of the Graseby Andersen dichotomous sampler.

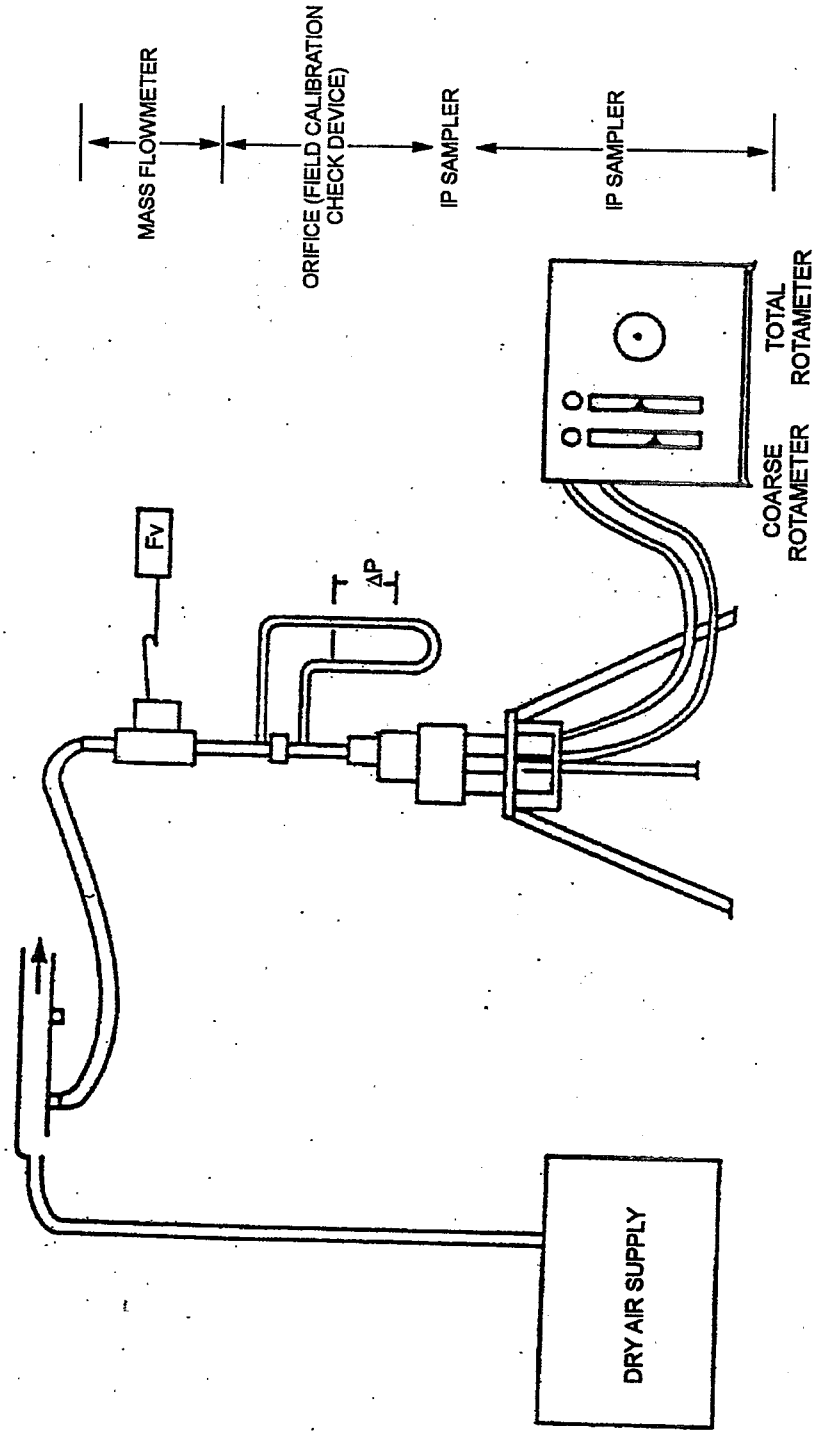

Figure 5. Schematic of the Graseby calibration setup using a mass flowmeter as the transfer standard.

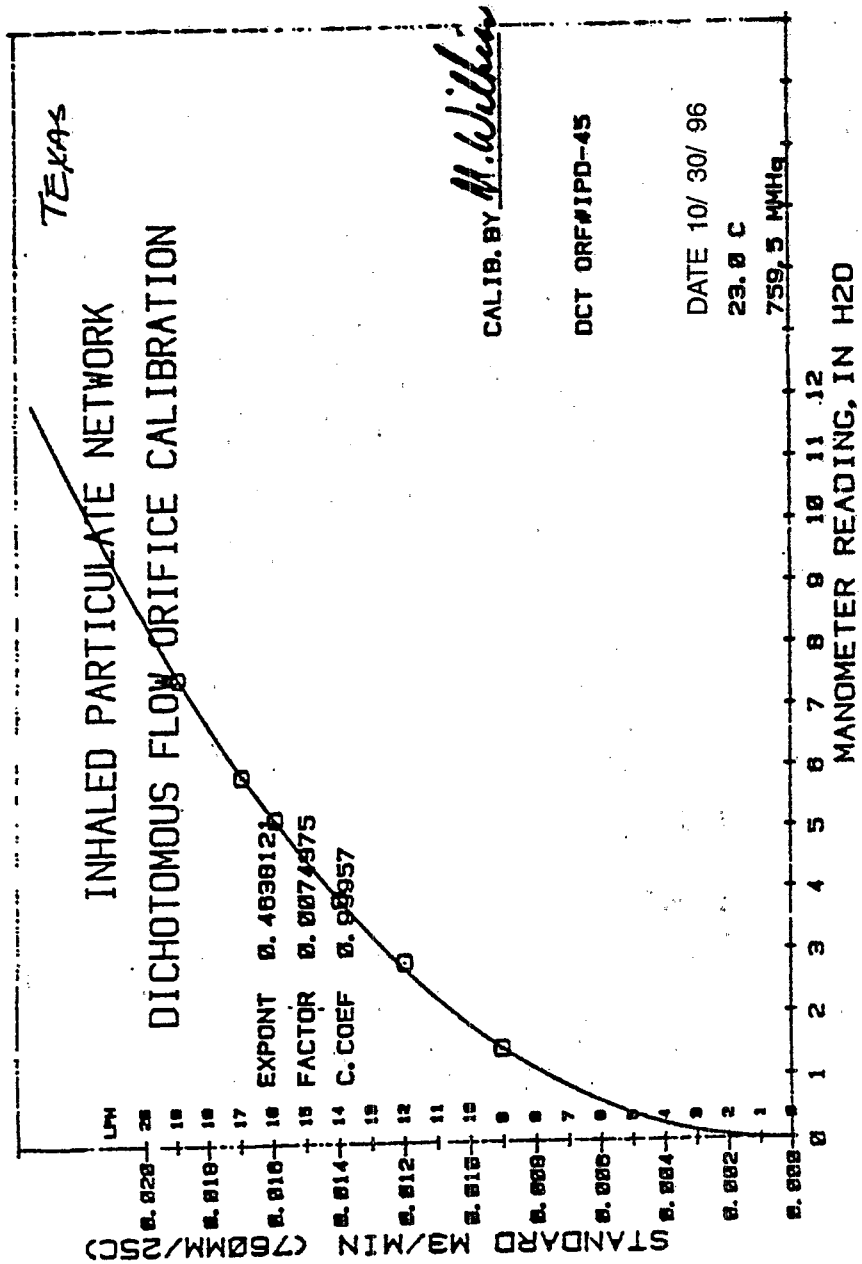

Figure 6. Dichotomous flow orifice calibration curve.

DICHOTOMOUS TRANSFER STANDARD CALIBRATION FORM

Mass flowmeter S/N: _____
Date of calibration: ___/___/___
Calibrated by: _____

Barometric pressure (P_1): _____ mm Hg
Ambient temperature (T_1): _____ K

Calibration Point	Primary standard			Transfer standard		Percent difference	Power curve regression $Y = A(X)^B$
	V_m	t	$Q_{std}(c)$	$F_v(c)$	$Q_{std}(P)$		A = _____
1							B = _____
2							C = _____
3							
4							
5							
6							
7							
8							

Figure 7. Dichotomous transfer standard calibration form.

Dichotomous Field Test Data Sheet

Site Number: _____ Location: _____ Sampler S/N: _____

Flow rates: Set COARSE retameter at _____ for 1.67 L/min.

Set TOTAL retameter at _____ for 16.67 L/min.

Date	Initials	COARSE filter number	FINE filter number	Final COARSE retameter reading	Final TOTAL retameter reading	COARSE Average reading average m^3/min	TOTAL Average reading average m^3/min	FINE average m^3/min	Elapsed time, minutes	Remarks

Figure 8. Dichotomous sampler field test data sheet.

Dichotomous Flow Check Data Sheet

Atmospheric pressure: _____ mm Hg, in. Hg

Temperature: _____ °C, °F

Location: _____ Operator: _____

Date: _____ Sampler EPA Number: _____

Dickson/ratameter reading(s)		Sampler flow rates m^3/min	
A	Coarse rotameter: _____	A	Coarse rotameter: _____
B	Fine rotameter: _____	B	Fine rotameter: _____
C	Total rotameter: _____	C	Total rotameter: _____
D	Dickson recorder: _____	D	Dickson recorder: _____

Total sampler flow rate: (1) _____ m^3/min (A + B, C, or D)

Orifice serial number: _____ Calibration date: _____

Orifice manometer reading: _____ inches H_2O

Orifice flow rate: (2) _____ m^3/min

Calculations

Percent error $\frac{(1) - (2)}{(2)}$ X 100 = (3) _____ %

QC Check % (3) + 100 = (4) _____ %

Figure 9. Dichotomous Flow Check Data Sheet.

EPA/625/R-96/010a

Compendium of Methods for the Determination of Inorganic Compounds in Ambient Air

Compendium Method IO-2.3

SAMPLING OF AMBIENT AIR FOR PM_{10} CONCENTRATION USING THE RUPPRECHT AND PATASHNICK (R&P) LOW VOLUME PARTISOL® SAMPLER

Center for Environmental Research Information
Office of Research and Development
U.S. Environmental Protection Agency
Cincinnati, OH 45268

January 1997

Method IO-2.3

Acknowledgements

This Method is a part of *Compendium of Methods for the Determination of Inorganic Compounds in Ambient Air* (EPA/625/R-96/060a), which was prepared under Contract No. 68-C3-0315, WA No. 2-10, by Midwest Research Institute (MRI), as a subcontractor to Eastern Research Group, Inc. (ERG), and under the sponsorship of the U.S. Environmental Protection Agency (EPA). Justice A. Manning, Center for Environmental Research Information (CERI), and Frank F. McElroy, National Exposure Research Laboratory (NERL), both in the EPA Office of Research and Development, were the project officers responsible for overseeing the preparation of this method. Other support was provided by the following members of the Compendia Workgroup:

- James L. Cheney, Corps of Engineers, Omaha, NB
- Michael F. Davis, U.S. EPA, Region 7, KC, KS
- Joseph B. Elkins Jr., U.S. EPA, OAQPS, RTP, NC
- Robert G. Lewis, U.S. EPA, NERL, RTP, NC
- Justice A. Manning, U.S. EPA, ORD, Cincinnati, OH
- William A. McClenny, U.S. EPA, NERL, RTP, NC
- Frank F. McElroy, U.S. EPA, NERL, RTP, NC
- William T. "Jerry" Winberry, Jr., MRI, Cary, NC

This Method is the result of the efforts of many individuals. Gratitude goes to each person involved in the preparation and review of this methodology.

Author(s)

- Erich Rupprecht, Rupprecht and Patashnick, Albany, NY

Peer Reviewers

- David Brant, National Research Center for Coal and Energy, Morgantown, WV
- John Glass, SC Department of Health and Environmental Control, Columbia, SC
- Jim Cheney, U.S. Army Corps of Engineers, Omaha, NB
- Neil Olsen, Utah Department of Health, Salt Lake City, UT

DISCLAIMER

This Compendium has been subjected to the Agency's peer and administrative review, and it has been approved for publication as an EPA document. Mention of trade names or commercial products does not constitute endorsement or recommendation for use.

Method IO-2.3
Sampling of Ambient Air for PM_{10} Concentration
Using the Rupprecht and Patashnick (R&P)
Low Volume Partisol® Sampler

Using Low Volume Partisol® Sampler

TABLE OF CONTENTS

	Page
1. Scope	2.3-1
2. Applicable Documents	2.3-3
2.1 ASTM Documents	2.3-3
2.2 Other Documents	2.3-3
3. Summary	2.3-3
4. Significance	2.3-4
5. Definitions	2.3-4
6. Apparatus Description	2.3-6
6.1 General Description	2.3-6
6.2 Flow System	2.3-7
6.3 Microprocessor-Enabled Functions	2.3-8
7. Filters	2.3-10
7.1 Filter Media	2.3-10
7.2 Filter Handling and Inspection	2.3-11
7.3 Initial 47 mm Filter Equilibration	2.3-11
7.4 Initial 47 mm Filter Weighing	2.3-11
7.5 Filter Exchange	2.3-12
7.6 Post-Collection Equilibration	2.3-12
7.7 Post-Collection Weighing	2.3-13
7.8 Computation of Mass Concentration	2.3-13
8. Routine Maintenance	2.3-14
9. Audit	2.3-14
9.1 Temperature Audit of the Partisol® Sampler	2.3-14
9.2 Pressure Audit of the Partisol® Sampler	2.3-14
9.3 Leak Check of the Partisol® Sampler	2.3-15
9.4 Flow Audit of the Partisol® Sampler	2.3-16
10. Calibration of the Partisol® Sampler	2.3-16
10.1 Interface Board Calibration	2.3-17
10.2 Analog Input Calibration	2.3-17
10.3 Temperature Calibration	2.3-18
10.4 Pressure Calibration	2.3-19
10.5 Flow Calibration	2.3-19
11. Operation Procedure	2.3-20
12. Interferences	2.3-22
13. Performance Criteria and QA	2.3-22
14. Records	2.3-22
15. References	2.3-22

Chapter IO-2
INTEGRATED SAMPLING OF SUSPENDED PARTICULATE MATTER (SPM)

Method IO-2.3
Sampling of Ambient Air for PM_{10} Concentration Using the Rupprecht and Patashnick (R&P) Low Volume Partisol® Sampler

1. Scope

1.1 The area of toxic air pollutants has been the subject of interest and concern for many years. Recently the use of receptor models has resolved the elemental composition of atmospheric aerosol into components related to emission sources. The assessment of human health impacts resulting in major decisions on control actions by federal, state and local governments is based on these data. Accurate measures of toxic air pollutants at trace levels is essential to proper assessment.

1.2 Suspended particulate matter (SPM) in air generally is a complex multi-phase system of all airborne solid and low-vapor pressure liquid particles having aerodynamic particle sizes from below 0.01-100 μm and larger. Historically, SPM measurement has concentrated on total suspended particulates (TSP), with no preference to size selection.

1.3 The U. S. Environmental Protection Agency (EPA) reference method for TSP is codified at 40 CFR 50, Appendix B. This method uses a high-volume sampler (hi-vol) to collect particles with aerodynamic diameters of approximately 100 μm or less. The hi-vol samples 40 and 60 ft^3/min of air with the sampling rate held constant over the sampling period. The high-volume design causes the TSP to be deposited uniformly across the surface of a filter located downstream of the sampler inlet. The TSP high volume can be used to determine the average ambient TSP concentration over the sampling period, and the collected material subsequently can be analyzed to determine the identity and quantity of inorganic metals present in the TSP.

1.4 Research on the health effects of TSP in ambient air has focused increasingly on those particles that can be inhaled into the respiratory system, i.e., particles of aerodynamic diameter less than 10 μm. Researchers generally recognize that these particles may cause significant, adverse health effects.

1.5 On July 1, 1987, the U. S. Environmental Protection Agency (EPA) promulgated a new size-specific air quality standard for ambient particulate matter. This new primary standard applies only to particles with aerodynamic diameters ≤ 10 micrometers (PM_{10}) and replaces the original rules for TSP. To measure concentrations of these particles, the EPA also promulgated a new federal reference method (FRM). This method is based on the fractionation of non-PM_{10} particles from their size distribution, followed by filtration and gravimetric analysis of PM_{10} mass on the filter substrate.

1.6 The new primary standard (adopted to protect human health) limits PM_{10} concentrations to 150 $\mu g/m^3$ during a 24-h period. These smaller particles are able to reach the lower regions of the human respiratory tract and, thus, are responsible for most of the adverse health effects associated with

suspended particulate pollution. The secondary standard, used to assess the impact of pollution on public welfare, has also been established at 150 $\mu g/m^3$.

1.7 Monitoring methods for particulate matter are designated by the EPA as reference or equivalent methods under the provisions of 40 CFR Part 53, which was amended in 1987 to add specific requirements for PM_{10} methods. Part 53 sets forth functional specifications and other requirements that reference and equivalent methods for each criteria pollutant must meet, along with explicit test procedures by which candidate methods or samplers are to be tested against those specifications. General requirements and provisions for reference and equivalent methods are also given in Part 53, as are the requirements for submitting an application to the EPA for a reference or equivalent method determination.

1.8 Under the Part 53 requirements, *reference methods* for PM_{10} must use the measurement principle and meet other specifications set forth in 40 CFR 50, Appendix J. They must also include a PM_{10} sampler that meets the requirements specified in Subpart D of 40 CFR 53. Appendix J specifies a measurement principle based on extracting an air sample from the atmosphere with a powered sampler that incorporates inertial separation of the PM_{10} size range particles followed by collection of the PM_{10} particles on a filter over a 24-h period. The average PM_{10} concentration for the sample period is determined by dividing the net weight gain of the filter over the sample period by the total volume of air sampled. Other specifications are prescribed in Appendix J for flow rate control and measurement, flow rate measurement device calibration, filter media characteristics and performance, filter conditioning before and after sampling, filter weighing, sampler operation, and correction of sample volume to EPA reference temperature and pressure. In addition, sampler performance requirements in Subpart D of Part 53 include sampling effectiveness (the accuracy of the PM_{10} particle size separation capability) at each of three wind speeds and "50 percent cutpoint" (the primary measure of 10-micron particle size separation). Field tests for sampling precision and flow rate stability are also specified. In spite of the instrumental nature of the sampler, this method is basically a manual procedure, and all designated reference methods for PM_{10} are therefore defined as manual methods.

1.9 The procedures for sampling SPM in ambient air for PM_{10} based upon active sampling using a low-volume (16.7 L/min flow rate) air sampler are described in this compendium method. The ambient particle are collected on Teflon®-coated glass or Teflon® filters. The sampler collects PM_{10} ambient particles. The sampler can be adapted with a 2.5μm size-select inlet for the determination of fine particulate concentration.

1.10 The Partisol® air sampler, fitted with either a PM_{10} or $PM_{2.5}$ inlet, can be used with other types of particulate collection hardware such as filter packs and polyurethane foam (PUF) samplers.

2. Applicable Documents

2.1 ASTM Documents

- D1356 *Definition of Terms Related to Atmospheric Sampling and Analysis.*
- D1357 *Practice for Planning the Sampling of the Ambient Atmosphere.*

2.2 Other Documents

- STP598 Calibration in Air Monitoring
- U. S. Environmental Protection Agency, *Quality Assurance Handbook for Air Pollution Measurement Systems, Volume I: A Field Guide for Environmental Quality Assurance*, EPA-600/R-94-038a.
- U. S. Environmental Protection Agency, *Quality Assurance Handbook for Air Pollution Measurement Systems, Volume II: Ambient Air Specific Methods (Interim Edition)*, EPA-600/R-94-038b.
- *Reference Method for the Determination of Particulate Matter in the Atmosphere*, Code of Federal Regulations, 40 CFR 50, Appendix J.
- *Reference Method for the Determination of Suspended Particulates in the Atmosphere (High Volume Method)*, 40 CFR 50, Appendix B.
- *Operations Manual*, Partisol® Model 2000 Air Sampler, Ruppecht and Patashnick, Albany, NY.

3. Summary

3.1 The Ruppecht and Patashnick (R&P) Low-Volume Partisol® Air Sampler is a microprocessor-controlled manual sampler with a unique set of features that make it a suitable platform for measuring particulate concentration, acid aerosol, and other constituents found in the atmosphere. When equipped with a PM_{10} inlet and operated in its most basic mode, the hardware performs the same function as traditional high-volume PM_{10} samplers. For source apportionment or traffic studies, the device can be set up to sample by wind velocity and/or direction or by time of day.

3.2 Ambient air is drawn through a low flow (16.7 L/min) PM_{10} or $PM_{2.5}$ inlet where particle size selection takes place.

3.3 The particulate-laden air is then directed through a collection filter composed of either quartz, Teflon®-coated glass, or Teflon® where the particulate matter is collected.

3.4 A mass flow control system maintains the sample flow through the system at the prescribed volumetric flow using information from sensors that measure the ambient temperature (°C) and ambient pressure (atmospheres). A piston pump creates a vacuum to draw the sample stream through the inlet, filter, and mass flow controller.

3.5 A microelectronics system provides the user with menu-driven programming and diagnostic and data storage capabilities.

3.6 The sample filter is conditioned and weighed both before and after sample collection to determine the amount of mass collected during the sampling period, which is 24 h for EPA reporting purposes. As is the case with all filter-based manual samplers, proper filter handling is an important element in computing valid mass concentration results.

4. Significance

4.1 Particulate concentration is a criteria pollutant for which the EPA has set health-related standards. In addition, a number of recently published studies point to a link between the concentration of particulate matter and human health-related indicators. In attempting to lower the overall concentration of particulate matter, agencies and private organizations use the conditional sampling capabilities of the Partisol® Sampler to help identify sources.

4.2 The airborne particulate collected on the 47 mm filter in the Partisol® Sampler may be subjected to a number of post-collection chemical analytical techniques to ascertain the composition of the material caught by the filter. Such techniques include X-ray fluorescence (XRF) spectrometry, graphite furnace atomic absorption (GFAA), inductively coupled plasma/mass spectroscopy (ICP/MS), PIXE, and others. The type of filter media should be compatible with the analytical method used.

4.3 To determine the concentration levels of polynuclear aromatic hydrocarbons (PAH's), dioxins, polychlorinated biphenyls (PCB's), polychlorinated naphthalenes (PCN's) and pesticides in ambient air, the standard 47 mm filter holder/exchange mechanism can be replaced with a PUF sampler. An optional, multi-stage filter pack can be used to collect particulate, nitric acid, and other airborne constituents. An optional annular denuder system can be used to collect acid aerosols.

4.4 The hub and satellite configuration of the Partisol® Sampler makes it possible to perform conditional particulate measurements by time of day, wind direction, analog input or serial input. These modes of operation are in addition to the sampler's basic 24-h, midnight-to-midnight sampling program. The added capabilities listed above are important to individuals who would like to determine the sources of ambient particulate.

5. Definitions

[Note: Definitions used in this document are consistent with ASTM Methods. All pertinent abbreviations and symbols are defined within this document at point of use.]

5.1 Absolute Filter. A filter or filter medium of ultra-high collection efficiency that collects very small particles (submicrometer size) with an efficiency of 99.95% or higher for a standard aerosol of 0.3 μm diameter.

5.2 Aerodynamic Diameter. The diameter of a unit density sphere having the same terminal settling velocity as the particle in question. Operationally, the size of a particle as measured by an inertial device.

5.3 Aerosol. A dispersion of solid or liquid particles in gaseous media.

5.4 Ambient. Surrounding on all sides.

5.5 Calibration. The process of comparing a standard or instrument with one of greater accuracy (smaller uncertainty) to obtain quantitative estimates of the actual values of the standard being calibrated, the deviation of the actual value from a nominal value, or the difference between the value indicated by an instrument and the actual value.

5.6 Differential Pressure Meter. Any flow measuring device that operates by restricting air flow and measuring the pressure drop across the restriction.

5.7 Filter. A porous medium for collecting particulate matter.

5.8 Flow Meter. An instrument for measuring the rate of a fluid moving through a pipe or duct system. The instrument is calibrated to give volume or mass of flow.

5.9 Impaction. A forcible contact of particles of matter. A term used synonymously with impingement.

5.10 Impactor. A sampling device that employs the principle of impaction (impingement).

5.11 Inhalable Particles. Particles with aerodynamic diameters of $< 10\ \mu m$ that are capable of being inhaled into the human lung.

5.12 Interference. An undesired positive or negative output caused by a substance other than the one being measured.

5.13 Mass Flow Meter. A device that measures the flow rate of air passing a point, usually using the rate of cooling or heat transfer from a heated probe.

5.14 Matter. The substance of which a physical object is composed.

5.15 Particulate. Solids or liquids existing in the form of separate particles.

5.16 Precision. The degree of mutual agreement between individual measurements, namely repeatability and reproducibility.

5.17 Sampling. A process of withdrawing or isolating a fractional part of a whole. In air or gas analysis, the separation of a portion of an ambient atmosphere with or without the simultaneous isolation of selected components.

5.18 Standard. A concept established by authority, custom, or agreement to serve as a model or rule in the measurement of quantity or the establishment of a practice or procedure.

5.19 Traceability to NIST. A documented procedure by which a standard is related to a more reliable standard verified by the National Institute of Standards and Technology (NIST).

5.20 Uncertainty. Any allowance assigned to a measured value to take into account two major components of error: the systematic error and the random error attributed to the imprecision of the measurement process.

5.21 Virtual Impaction. Impaction of particles on stagnant air rather than a solid plate.

5.22 Virtual Impactor. Sampler in which particle size separation is accomplished by impaction into an air stream of differing velocity rather than onto an impaction surface.

6. Apparatus Description

6.1 General Description

6.1.1 The R&P Low-Volume Partisol® sampling system may be composed of either a hub unit operating alone or a hub unit connected to as many as three satellite units (see Figure 1). The hub unit contains not only the sample inlet (PM_{10} or $PM_{2.5}$) and 47 mm filter exchange mechanism found in the satellite units, but also a microprocessor with internal data storage, an active flow control system, and a pump. The satellite units are connected to the hub by flow lines that are activated by solenoid valves contained in the hub. Only one unit (either hub or satellite) can be active at any particular time. The user programs the system using menu-driven software to determine the conditions under which the hub or satellite units are active.

6.1.2 In its simplest form, the Partisol® Sampler is set up to collect particulate matter (PM_{10} or $PM_{2.5}$) on a standard 47 mm filter disk for 24-h periods stretching from midnight to midnight. As with other manual sampling devices, the filters used in this procedure are conditioned and weighed before exposure, and then conditioned and weighed again after use to determine the mass of particulate collected during the 24-h exposure time. The Partisol® hardware stores the data relevant to each 24-h collection period in its internal data logger for viewing and/or retrieval after the fact. Such information includes the total volume (in terms of standard temperature and pressure), total collection time, average temperature, and average pressure during the collection period.

6.1.3 In addition to the sampler's basic 24-h midnight-to-midnight operating cycle, the hardware can also be operated manually. If the system is purchased with an optional advanced EPROM (electrically programmable read only memory) module, four additional advanced programming modes are available: to indicate time, meteorology, analog input from a data logger, and digital input.

6.1.4 Internal diagnostics determine whether any status conditions are present. These conditions are displayed on the main screen of the sampler and are stored in the internal memory of the hardware for later retrieval.

6.1.5 An analog output channel (0-5 VDC) can be set up to operate in one of two different modes: (1) to indicate which flow channel is currently in use and whether any status conditions are present; and (2) to indicate output changes in relation to the flow rate currently passing through the sampler.

6.1.6 Ambient temperature and pressure sensors maintain the flow through the sample inlet at the proper volumetric flow rate. The total flow volume for each collection filter is reported in mass terms according to the standard temperature and pressure entered by the user in the Setup Screen.

6.1.7 RS-232 communication capabilities allow for data retrieval into a personal computer or remotely through a modem. The selection of which sampling station is currently active can be controlled optionally through a digital transmission through the RS-232 connection to the Partisol® Sampler.

6.2 Flow System

6.2.1 The system flow schematic (see Figure 2) provides an overview of the hardware's flow and electronic connections, and depicts a PM_{10} inlet on the hub unit as well as on three satellite units. The satellite units are connected to the hub through 10 m (20 m available optionally) flow lines that are controlled by solenoid valves in the hub unit. Only one sampling station (hub or satellite) is active at any given time. The system's solenoid valves are controlled by the embedded microprocessor in accordance with the sampling program defined by the user.

6.2.2 After the sample flow passes through the 47 mm filter or other installed collection hardware, it passes through the solenoid valve and an in-line filter that protects the mass flow sensor. The sampler measures the current atmospheric pressure (atmospheres) and ambient temperature (°C) to adjust the reading from the mass flow sensor so that the proper volumetric flow rate is maintained. While the vacuum pump constantly operates at full capacity, a servo valve allows varying rates of flow to enter the system so that the sample flow is maintained at its volumetric set point. The accumulator minimizes pulsation caused by the vacuum pump, while the manual shut-off valves and vacuum gauge are used in audit and calibration procedures.

6.2.3 The Partisol® maintains a constant volumetric flow rate through the hub and satellite units at the set point entered by the user, while reporting flow volumes (m^3) in mass terms based upon standard temperature and pressure. The flow rate used must be appropriate for the inlets being used in the Partisol® system. The PM_{10}, $PM_{2.5}$ and TSP inlets available from R&P operate at a flow rate of 16.7 L/min (1 m^3/h).

6.2.4 The sampling hardware determines the ambient temperature and pressure for flow rate calculations in one of two different ways: (1) the temperature and pressure transducers measure the current ambient temperature (°C) and ambient pressure (atmospheres); or (2) if the sampler is installed in an indoor location where outdoor air is being sampled, the user can override the automatic temperature and pressure measurements by entering seasonal averages for temperature and pressure in the software.

6.2.5 The Partisol® Sampler displays in its Setup Screen the standard temperature (°C) and standard pressure (atmospheres) in which flow volumes are computed for regulatory reporting purposes. These values may be changed by the user. By default, the standard temperature is 25°C and the standard pressure is 1 atmosphere.

6.2.6 The mass flow meter in the sampler is calibrated at a temperature of 0°C and a pressure of 1 atmosphere (1013.2 millibars or 760 mm Hg). For the device to sample at the correct volumetric flow rate, it uses the measured (or entered) average temperature and pressure. Using this information, the microprocessor calculates the correct mass flow set point (Flow $Rate_{STP}$) using the following formula:

$$\text{Flow Rate}_{STP} = \text{Flow Rate}_{Vol} \times \frac{273.15}{\text{Ave Temp}+273.15} \times \frac{\text{Ave Pres}}{1.0}$$

where:

Flow Rate_{STP} = Control set point of the mass flow meter (equivalent flow at 0°C and 1 atmosphere).

Flow Rate_{Vol} = Volumetric flow rate set point (L/min) as entered by the user in the Setup Screen of the sampler. This value is 16.7 L/min (1 m^3/h) for most applications.

Ave Temp = The current temperature (°C) as measured by the temperature transducer mounted on the sample tube of the hub unit or the value entered for average temperature by the user in the Setup Screen.

Ave Pres = The current pressure (atmospheres) as measured by the pressure transducer in the hub unit, or the value entered for average pressure by the user in the Setup Screen.

6.2.7 Mass concentration data reported to the EPA must be referenced to standard cubic meters of air based on a standard temperature of 25°C and standard pressure of 1 atmosphere. For the instrument to report mass flow volumes according to this standard, the user must ensure that the standard temperature and standard pressure parameters in the Setup Screen are set at their default values of 25°C and 1 atmosphere, respectively.

The flow rates referenced internally by the instrument to 0°C are converted to EPA standard conditions (25°C and 760 mmHg) using the following computation:

$$\text{Volume}_{EPA} = \text{Volume}_{STP} \times \frac{\text{Std Temp}+273.15}{273.15} \times \frac{1\ \text{Atm}}{1\ \text{Atm}}$$

This Volume_{EPA} is the value displayed and stored by the Partisol® Sampler. This feature saves the user from having to make the conversion manually, as must be done with conventional high-volume samplers.

6.3 Microprocessor-Enabled Functions

6.3.1 The operation of the Partisol® Sampler is controlled by an embedded microprocessor equipped with a battery-backed, real-time clock and internal storage capability. The operator uses a display and keypad to interact with the system. The software allows the user to view the data, program the instrument, and set operating parameters (see Figure 3). The following is a brief description of the screens in the sampler.

6.3.1.1 The **Title Screen** appears when the user first turns on the sampler and contains the name of the instrument and software revision number.

6.3.1.2 The **Main Screen** displays the operating statistics for each installed unit on a separate line, including the volume of air drawn through each sampling station and the elapsed time that the unit was operating. In most programming modes, the Main Screen also allows the user to enter the conditions

under which each sampling station is to be active. This screen also displays the presence of any status conditions currently detected by the sampler.

6.3.1.3 The **Programming Screen** is present in the Meteorological and Time programming modes and allows the user to enter the conditions under which each sampling station is to be active.

6.3.1.4 The **Statistics Screen** displays the current operating condition of the sampler, including the flow rate, ambient temperature and pressure, the status of serial and analog inputs, and the software version number.

6.3.1.5 The **Setup Screen** contains the basic configuration of the sampler, including the number of sampling stations, current programming mode, flow rate set point, type of analog output, current time and date, and standard and average temperatures and pressures.

6.3.1.6 The **Filter Data Screen** allows the user to scroll forward and backward through time to view the operating data corresponding to each filter exposed in the Partisol® Sampler. Data stored for each filter include the station number, time and date of first and last exposures, programming mode, volume and elapsed time during which the filter was exposed, average temperature, and average pressure.

6.3.1.7 The **Interval Data Screen** allows the user to scroll forward and backward through time to view half-hour summaries of the sampler's operation. Data stored for each 30 min period of operation include the length of time during which each sampling station was active, the average temperature and pressure, as well as the minimum, average, and maximum flow rate.

6.3.1.8 The **RS232 Setup Screen** allows the user to configure the Partisol® Sampler for two-way serial communication and includes the baud rate and data transmission protocol.

6.3.1.9 The **Calibration Screen** displays the values necessary for the user to perform audits and calibrations on the Partisol® Sampler.

6.3.1.10 The **Diagnostics Screen** displays the current state of the system's analog inputs and outputs and its digital outputs.

6.3.2 Programming Modes

The Partisol® Sampler can operate in a number of programming modes.

6.3.2.1 The **Basic** mode supports sample collection from midnight to midnight.

6.3.2.2 In the **Manual** mode, the user selects the currently active sampling station through direct keypad entry.

6.3.2.3 In the **Time** mode, the operation of the sampling stations is controlled according to time and date ranges entered by the user. This feature is included in the advanced EPROM.

6.3.2.4 In the **Meteorology** mode, the sampling stations is controlled by wind velocity and/or direction criteria entered by the user. This feature is included in the advanced EPROM and requires a compatible wind vane/anemometer to measure wind direction and velocity.

6.3.2.5 The **Analog Input** mode enables control of the sampler through an externally-generated analog input. This feature is included in the advanced EPROM.

6.3.2.6 The **Serial Input** mode allows the user to control the operation of the Partisol® Sampler through a two-way RS232 link. This feature is included in the advanced EPROM.

6.3.3 Status Conditions

The current status condition is displayed on the **Main Screen** of the Partisol® Sampler and is stored as part of the 30-min Interval Data. The following status definitions indicate the present condition of the sampler.

6.3.3.1 The **"OK"** condition means there are no current status conditions.

6.3.3.2 The "F" (Flow) condition occurs whenever the current volumetric flow rate varies more than 7% from the set point for the volumetric flow rate entered in the Setup Screen.

6.3.3.3 The "T" (Ambient Temperature) condition ensures that the ambient temperature sensor located on the sample tube of the hub unit measures correctly. This status occurs whenever the ambient temperature indicated by the temperature sensor is less than -40°C or greater than 60°C.

6.3.3.4 The "P" (Pressure Transducer) condition ensures that the ambient pressure sensor located in the hub unit measures correctly. This conditions occurs whenever the ambient pressure indicated by the pressure sensor is less than 0.4 atmospheres.

6.3.3.5 The "I" (Instrument Temperature) condition reacts to the internal temperature of the Partisol® Sampler as measured on one of its electronics boards. This diagnostic determines whether the temperature of the system electronics is approaching the operational limits; it is activated whenever the instrument temperature is less than 5°C or greater than 60°C.

6.3.3.6 The "S" (Serial Communication) condition indicates that a failure has occurred in the sampler's RS232 interface.

6.3.3.7 The "E" (Electrical Outage) condition indicates that an interruption has occurred in the supply of main power.

6.3.3.8 The "R" (Relay Control Hardware) condition indicates that a fault has occurred in the digital input/output section of the system electronics.

7. Filters

This section covers the initial inspection of 47 mm filters used in the Partisol® system, as well as the equilibration and weighing before use. Further, the procedure for filter insertion and removal is described along with the means by which post-collection equilibration and weighing occur and the computations involved in determining the mass concentration. Follow the guidelines described in this section closely to ensure data quality.

7.1 Filter Media

A number of different media are available in the standard 47 mm size for use with the Partisol® Sampler. They are:

- Pallflex TX40 Filters.
- Teflon® Filters.
- Quartz Fiber Filters.

These media are currently acceptable for use in EPA equivalent and reference PM_{10} instrumentation. All are suitable for particulate mass measurement; however, one type of media may be preferable to others depending upon the type of post-collection chemical speciation desired. Filter media may be used for EPA PM_{10} reporting purposes as long as the material meets the collection efficiency, integrity, and alkalinity requirements of 40 CFR Part 50 Appendix J. Further, materials must have relatively low pressure drop characteristics so that the sampler can maintain the 16.7 L/min flow rate required for the PM_{10} inlet during an entire 24-h sampling period.

7.2 Filter Handling and Inspection

Take deliberate care when handling and transporting sample filters. Quartz fiber filters are very brittle, while other type of material are susceptible to tearing.

[Note: Keep filters clean and never touch filters with fingers. Filters should be stored and transported in petri dishes. Only non-serrated forceps should be used to handle the 47 mm filters used with the sampler.]

Inspect each filter visually for integrity before use. Check for pinholes, chaff or flashing, loose material, discoloration, and non-uniformity.

7.3 Initial 47 mm Filter Equilibration

[Note: Use a petri dishes to storae and transport the filters.]

7.3.1 Place a label on the cover of each petri dish and number each dish.
7.3.2 Place the petri dish cover under the bottom half of the dish.
7.3.3 Place each inspected filter into a separate petri dish.
7.3.4 Record the filter number, relative humidity, temperature, date, and time at the beginning of equilibration.
7.3.5 Equilibrate each filter for at least 24 h under the following conditions:
7.3.5.1 The equilibration room must be held at a constant relative humidity of $<50\%$.
7.3.5.2 The equilibration room must be held at a constant temperature between 15 and 35°C with a variability of no more than ± 3°C.

7.4 Initial 47 mm Filter Weighing

7.4.1 Ensure that each filter has been equilibrated for at least 24 h before weighing.
7.4.2 Filters must be weighed on a semi-micro balance with a minimum resolution of 0.01 mg. Ensure that the balance has been turned on at least 1 h before performing any weighings.
7.4.3 Weigh each filter at least once (three times recommended) and record the mass in grams. The average mass reading is the initial filter weight, W_i.
7.4.4 Immediately place each weighed filter into an open filter cassette and then close the filter cassette by snapping its top part onto the bottom. Ensure that the cassette is properly sealed by one of the following methods:
7.4.4.1 While holding the bottom part of the filter cassette in one hand, rotate the top of the cassette approximately 1/8 of a turn while applying pressure.
7.4.4.2 Hold the closed cassette in both hands with your thumb on the top and forefinger on the bottom. Rotate the entire cassette completely while applying pressure with your thumb and forefinger.
7.4.5 Place the filter cassette with its 47 mm filter installed into a petri dish and place the cover over the petri dish.
7.4.6 Document the relative humidity, temperature, date, and time of the initial weighing.

7.4.7 Verify the "zero" reading of the semi-micro balance between each filter weighing.

7.4.8 Filters are transported to the sampling site in their petri dishes.

7.5 Filter Exchange

[Note: With the exception of the Basic programming mode, the sampler must be in the "Stop" operating mode before filters are exchanged. Press <F4: Run/Stp> when in the Main Screen to toggle between the "Run" and "Stop" operating modes. When in the Basic programming mode, leave the sampler in the "Run" operating mode, but be careful not to exchange the filter in the currently-operating sampling station. The active unit is displayed on the second line of the Main Screen as "Curr."]

7.5.1 For each sampling station where a filter is being exchanged, record the valid and total exposure times and the standard volume (V_{STD}) displayed on the Main Screen.

7.5.2 Lift the handle of the filter exchange mechanism in the hub or satellite unit into its upward position to expose the area in which the filter cassette is installed.

7.5.3 If a filter is currently installed in the sampling unit, remove the filter cassette with its filter and place it immediately into its uniquely-numbered petri dish. A groove in the filter holding mechanism allows the user to gain better access to the filter cassette for removal.

7.5.4 Take the new filter cassette with its unused filter installed out of its petri dish and place it into the filter holding well of the filter exchange mechanism. The enclosure of the sampling station serves as a good storage location for the petri dish currently in use.

7.5.5 Close the filter exchange mechanism.

7.5.6 If the Partisol® Sampler is being operated in its Basic programming mode, use the soft function keys in the Edit Mode to define the sampling program for the newly-installed 47 mm filters. Make sure that the hardware remains in the "Run" operating mode so that the newly-defined sampling program is executed; press <F4: Run/Stp> if the sampler is currently in the "Stop" operating mode.

7.5.7 If the unit is in any other programming mode besides the Basic mode, use the soft function keys in the Edit mode to define the sampling program for the newly-installed 47 mm filters. Then, return the sampler to the "Run" operating mode by pressing <F4: Run/Stp> in the Main Screen to execute the newly-defined sampling program.

7.6 Post-Collection Equilibration

7.6.1 Examine the filter for defects that may have occurred during sampling and for evidence of leaks in the filter cassette. Leaks manifest themselves as pronounced radial streaks that extend beyond the exposed area of the filter.

7.6.2 Carefully remove the 47 mm filter from the filter cassette and set the filter in its petri dish. The cassette can then be used to hold other filters once it has been cleaned.

7.6.3 Place the petri dish cover under the bottom half of the dish.

7.6.4 Place a paper towel over the open petri dish during equilibration.

7.6.5 Record the filter number, relative humidity, temperature, date, and time at the beginning of this post-collection equilibration.

7.6.6 Equilibrate each filter for at least 24 h under the following conditions:

7.6.6.1 The equilibration room must be held at a constant relative humidity, <50%, with a variability of no more than ±5%.

7.6.6.2 The equilibration room must be held at a constant temperature, between 15-35°C, with a variability of no more than ±3°C.

7.7 Post-Collection Weighing

7.7.1 Ensure that the filter has been equilibrated for at least 24 h before weighing.

7.7.2 Filters must be weighed on a semi-micro balance with a minimum resolution of 0.01 mg. Ensure that the balance has been turned on for at least 1 h before performing any weighings.

7.7.3 Remove the filter from its petri dish.

7.7.4 Weigh each filter at least once (three times recommended) and record the mass in grams. The average mass reading is the final filter weight, W_f.

7.7.5 Return the filter to its petri dish and store for archival purposes.

7.7.6 Document the relative humidity, temperature, date, and time of the post-collection weighing.

7.7.7 The "zero" reading of the semi-micro balance should be verified between each filter weighing.

7.7.8 Determine the net mass filter loading (ΔW) by subtracting the average initial filter weight [W_i (g)] from the final filter weight [W_f (g)]. Ensure that the figures used in this computation are obtained for the same filter and balance.

7.8 Computation of Mass Concentration

Compute the average mass concentration, C ($\mu g/m^3$), corrected to standard temperature and pressure (25°C and 710 mm Hg), of PM_{10}, $PM_{2.5}$ or TSP during the sampling period of each filter by using the following formula with the information assembled above:

$$MC = \frac{\Delta W \times 10^6}{V_{EPA}}$$

where:

C	=	average mass concentration, $\mu g/m^3$, corrected to standard temperature any pressure (25°C and 710 mm Hg).
ΔW	=	the net change in the mass (g) of the 47 mm filter between the initial weighing and the post collection weighing, as computed in Section 7.4 through 7.7.
10^6	=	Conversion factor from grams (g) to micrograms (μg).
V_{EPA}	=	the volume (m^3) drawn through the filter, corrected to standard temperature and pressure, as recorded in Section 6.2.7.

For 24-h PM_{10} measurement averages to be valid for EPA reporting purposes, the "Valid Time" recorded in the Filter Data storage area must be at least 23 h. The "Total Time" is the length of time during which the sample stream flows through a filter, and the "Valid Time" is the length of time during

which the status condition is "OK." Therefore, the "Valid Time" is always less than or equal to the "Total Time."

8. Routine Maintenance

The routine maintenance of the Partisol® Sampler consists of the following procedures.

8.1 Inspect filter cassettes for contamination *after every use*. Wipe with a clean dry cloth as required.

8.2 Inspect the seals that rest against the filter cassette in the hub and satellite units *every time a filter is exchanged*. Wipe with a clean dry cloth as required. Replace if worn or damaged.

8.3 Clean each PM_{10} inlet after *every 14 days of inlet usage*. The PM_{10} inlet must be cleaned with the corresponding sampling station is not operating.

8.4 Exchange the large in-line filter in the hub unit *every 6 months* of system operation. Turn the sampler off to replace the large in-line filter.

8.5 Check the voltage level of the batteries on the main computer board of the hub unit *every 6 months*.

9. Audit

This section describes the means by which the ambient temperature, ambient pressure, and sample flow rate measured by the hub unit are audited. In addition, this part describes the procedure for performing a leak check of the hub and satellite units. The audit should be performed every 3 months of continuous operation. Individual monitoring organizations may, however, abide by different standards.

9.1 Temperature Audit of the Partisol® Sampler

9.1.1 Press <F2: Calib> when in the Setup Screen to access the Calibration Screen (see Figure 4).

9.1.2 Determine the current temperature (°C) at the ambient temperature sensor positioned on the sample tube of the hub using an external thermometer, [°C = 5/9 x (°F - 32)].

9.1.3 Verify that the value for temperature displayed in the "Calc" column of the Calibration Screen is within ±2°C of the measured temperature. If this is not the case, perform the temperature calibration procedure described in Section 10.3.

9.2 Pressure Audit of the Partisol® Sampler

9.2.1 Press <F2: Calib> when in the Setup Screen to access the Calibration Screen (see Figure 4).

9.2.2 Determine the current ambient station pressure in atmospheres (absolute pressure, not corrected to sea level).

- To convert from mm Hg at 0°C to atmospheres, multiply by 0.001316.
- To convert from millibars to atmospheres, multiply by 0.000987.
- To convert from inches Hg at 32°F to atmospheres, multiply by 0.03342.

9.2.3 Verify that the value for pressure displayed in the "Calc" column of the Calibration Screen is within ±0.02 atmospheres of the measured ambient pressure. If not, perform the pressure calibration procedure described in Section 10.4.

9.3 Leak Check of the Partisol® Sampler

[Note: To ensure leak tightness, a filter cassette containing a new 47 mm filter must be installed in each sampling station tested.]

9.3.1 Return the Partisol® sampler to the Main Screen.

9.3.2 The device must be in the "Stop" operating mode to perform a leak test. If the hardware is currently in the "Run" operating mode, as shown in the upper right-hand corner of the Main Screen, press <F4: Run/Stp> to enter the "Stop" operating mode.

9.3.3 Display the Calibration Screen (see Figure 4) by pressing <F5: Setup> and then <F2: Calib> when in the Main Screen.

9.3.4 Carefully remove the size-selective inlet from sampling station being checked.

9.3.5 Install the optional Flow Audit Adapter supplied with the sampler on the end of the sample tube of the sampling station being checked.

9.3.6 Turn on the pump by pressing <F7: PumpOn> (<SHIFT> <F2>) when in the Calibration Screen.

9.3.7 Press either <F2: Hub1>, <F3: Sat2>, <F4: Sat3>, or <F5: Sat4>, depending upon which sampling station is currently being checked.

9.3.8 Shut off the valve on the Flow Audit Adapter.

9.3.9 Shut off the flow to the flow controller assembly by turning the manual valve located on the manifold in the hub (marked in Figure 5).

9.3.10 Record the reading on the vacuum gauge in the hub.

9.3.11 Shut off the flow to the pump by turning the other manual valve located on the manifold in the hub (marked in Figure 6).

9.3.12 Record the reading on the vacuum gauge 10 s after the pump valve is closed. This reading should not drop below half of the original reading during this 10 s period. If this is not the case, trace the internal (and external) flow paths to identify problems in tubing or connections.

9.3.13 Open the flow controller valve and pump valve that were closed in Sections 9.3.9 and 9.3.11 above.

9.3.14 Open the valve of the Flow Audit Adapter and remove this hardware from the sampling station being checked. Replace the size-selective inlet.

9.3.15 Perform Sections 9.3.5 through 9.3.14 for each sampling station in the Partisol® system.

9.3.16 Return to the Main Screen by pressing <ESC> twice.

9.4 Flow Audit of the Partisol® Sampler

[Note: Perform the temperature audit, pressure audit, and leak check described above before executing the flow audit procedure below.]

9.4.1 Return the Partisol® sampler to the Main Screen.

9.4.2 The device must be in the "Stop" operating mode to perform a flow audit. If the hardware is currently in the "Run" operating mode, as shown in the upper right-hand corner of the Main Screen, press <F4: Run/Stp> to enter the "Stop" operating mode.

9.4.3 Install a filter cassette containing a 47 mm filter into the filter holder of the hub unit. This filter will be thrown away at the end of this flow audit.

9.4.4 Display the Calibration Screen (see Figure 4) by pressing <F5: Setup> and then <F2: Calib> when in the Main Screen.

9.4.5 Carefully remove the size-selective inlet from the hub.

9.4.6 Install the Flow Audit Adapter provided with the sampler on the end of the sample tube of the hub.

9.4.7 Attach a volumetric flow meter to the Flow Audit Adapter. R&P offers such a flow meter as part number 10-001742-0120 for 120 VAC and 10-001742-0240 for 240 VAC (see Figure 7).

9.4.8 Turn on the pump by pressing <F7: PumpOn> (<SHIFT> <F2>); then press <F2:Hub1>.

9.4.9 Use the <F8: DecrFlw> (continuously decrease flow), <F9: HoldFlw> (maintain current flow rate), and <F10: IncrFlw> (continuously increase flow) keys to display the flow rate in the "Calc" column of the Calibration Screen at approximately 16.7 L/min. As the servo valve in the hub closes and opens to increase and decrease the sample flow rate, the potentiometer value, "Pot," changes. This figure generally should not drop below 0.5 VDC or exceed 4.5 VDC.

9.4.10 Determine the flow in units of actual L/min using the external flow meter and verify that it matches the value displayed for flow in the "Calc" column of the Calibration Screen to within ±7%. If this is not the case, perform the flow calibration procedure described in Section 10.

9.4.11 Return to the Main Screen by pressing <ESC> twice.

9.4.12 Restore the sampling hardware to its original state by removing the flow metering hardware and re-installing the size selective inlet on the sample tube of the hub. Remove the filter cassette from this sampling station and throw away the filter installed in it.

10. Calibration of the Partisol® Sampler

[Note: This section contains instructions for performing an interface board, temperature, pressure, and flow calibration of the Partisol® Air Sampler. The temperature and pressure calibrations must be done before the flow calibration.]

10.1 Interface Board Calibration

[Note: The interface electronics board is located on the bottom panel of the area behind the keypad in the hub unit (labeled in Figures 8 and 9).]

10.1.1 Locate the two red test points on the front section of the interface board. These two test points are labeled "+6V" and "+10V."

10.1.2 Locate the black ground test point labeled "GND" between the two large black capacitors.

10.1.3 Ensure that the sampler is turned on and that the display backlight is on. The backlight must be on during the +6 V calibration. If the backlight is off, press any key on the keypad to turn it on.

10.1.4 Place the positive lead of a multimeter on the +6 V test point.

10.1.5 Place the ground lead on the ground test point.

10.1.6 Locate R21 on the on the rear section of the interface board. R21 is a horizontal pot, and its designation "R21" is silk-screened on the board.

10.1.7 Tweak R21 until the multimeter reads 6.00 VDC ± 0.05 V.

10.1.8 Place the positive lead of the multimeter on the +10 V test point.

10.1.9 Locate R44 on the rear section of the interface board. R44 is a blue vertical pot, and its designation "R44" is silk-screened on the board.

10.1.10 Tweak R44 until the multimeter reads 10.000 VDC ± 0.002 V.

10.2 Analog Input Calibration

[Note: The following procedure must be performed after the interface board calibration and before the temperature, pressure, and flow calibrations.]

10.2.1 Return the Partisol® sampler to the Main Screen.

10.2.2 The device must be in the "Stop" operating mode to perform an analog input calibration. If the hardware is currently in the "Run" operating mode, as shown in the upper right-hand corner of the Main Screen, press <F4: Run/Stp> to enter the "Stop" operating mode.

10.2.3 Press <F5: Setup> and then <F2: Calib> when in the Main Screen to access the Calibration Screen (see Figure 4).

10.2.4 Plug the six-pin end of the Analog Input Calibration Cable supplied with the sampler (part number 51-002604) into the socket labeled "ANEMOMETER" on the back of the Partisol® hub unit.

10.2.5 Plug the four-pin end of the Analog Input Calibration Cable into the socket labeled "USER OUTPUT" on the back of the Partisol® hub unit.

10.2.6 Attach the positive lead from a multimeter with four-digit resolution to the green test point labeled "PWM1" on the interface board. Attach the ground lead to the ground test point (see Figure 10).

10.2.7 Use the arrow key to position the cursor so that it is in the location labeled "A/O."

10.2.8 Press <Enter> to enter the Edit Mode. Type in a number between 0.050 and 0.150 volts and press <Enter>.

10.2.9 Observe the number displayed in the row labeled "A/I" in the column labeled "Calc." Ensure that this number does not vary more than ±0.005 volts after watching it for 5 s. If this number is not stable, choose a new number for "A/O" between 0.050 and 0.150 volts.

10.2.10 Read the voltage displayed on the multimeter.

10.2.11 Use the arrow keys to position the cursor so that it is in the row labeled "A/I" and the column labeled "Act."

10.2.12 Press Edit to enter the Edit Mode. Type the voltage read from the multimeter (to three digit accuracy, i.e., 0.xxx) in this position and press <Enter>. To calculate the "Offset."

10.2.13 Ensure that the number now displayed in the row labeled "A/I" and the column labeled "Calc" matches the number displayed on the multimeter within ±0.005 volts.

10.2.14 Use the arrow key to position the cursor so that it is in the location labeled "A/O."

10.2.15 Press <F1: Edit> to enter the Edit Mode. Type in a number between 4.800 and 4.900 volts and press <Enter>.

10.2.16 Observe the number displayed in the row labeled "A/I" in the column labeled "Calc." Ensure that this number does not vary more than ±0.005 volts after watching it for 5 s. If this number is not stable, choose a new number for "A/O" between 4.800 and 4.900 volts.

10.2.17 Read the voltage displayed on the multimeter.

10.2.18 Use the arrow keys to position the cursor so that it is in the row labeled "A/I" and the column labeled "Act."

10.2.19 Press <Edit> to enter the Edit Mode. Type the voltage read from the multimeter (to three digit accuracy, i.e., 0.xxx) in this position and press <ENTER> to calculate the "Span."

10.2.20 Ensure that the number now displayed in the row labeled "A/I" and the column labeled "Calc" matches the number displayed on the multimeter within ±0.005 volts.

10.2.21 Remove the multimeter leads from the interface board and the Analog Input Calibration Cable from the back of the Partisol® hub.

10.2.22 After completing the analog input calibration, perform the temperature, pressure, and flow calibrations.

[Note: If the instrument has been reset and you have recorded the value of "Offset" and "Span" for the flow, you may enter these numbers directly when in the Edit Mode.]

10.3 Temperature Calibration

10.3.1 Return the Partisol® sampler to the Main Screen.

10.3.2 The device must be in the "Stop" operating mode to perform a temperature calibration. If the hardware is currently in the "Run" operating mode, as shown in the upper right-hand corner of the Main Screen, press <F4: Run/Stp> to enter the "Stop" operating mode.

10.3.3 Press <F5: Setup> and <F2: Calib> when in the Main Screen to access the Calibration Screen (see Figure 4).

10.3.4 Determine the current temperature (°C) at the ambient temperature sensor positioned on the sample tube of the hub using an external thermometer, [°C = 5/9 x (°F - 32)].

10.3.5 Press <F1: Edit> to enter the Edit Mode and move the cursor to the "Act" (actual) column in the row labeled "Temp."

10.3.6 Enter the current ambient temperature (°C) and press <ENTER> to leave the Edit Mode. Use the <F6: +/-> key to enter negative temperatures when in the Edit Mode.

10.3.7 Upon receiving the actual temperature, the system's microprocessor automatically computes "Span" for the ambient temperature. Note this number for future reference.

[Note: If the instrument has been reset and you have recorded the value of "Span" for the ambient temperature, you may enter it directly in the "Span" column when in the Edit Mode.]

10.4 Pressure Calibration

10.4.1 Return the Partisol® sampler to the Main Screen.

10.4.2 The device must be in the "Stop" operating mode to perform a pressure calibration. If the hardware is currently in the "Run" operating mode, as shown in the upper right-hand corner of the Main Screen, press <F4: Run/Stp> to enter the "Stop" operating mode.

10.4.3 Press <F5: Setup> and <F2: Calib> when in the Main Screen to access the Calibration Screen (see Figure 4).

10.4.4 Determine the current ambient station pressure in atmospheres (absolute pressure, not corrected to sea level).

- To convert from mm Hg at 0°C to atmospheres, multiply by 0.001316.
- To convert from millibars to atmospheres, multiply by 0.000987.
- To convert from inches Hg at 32°F to atmospheres, multiply by 0.03342.

10.4.5 Press <F1: Edit> to enter the Edit Mode and move the cursor to the "Act" (actual) column in the row labeled "Pres."

10.4.6 Enter the current ambient pressure (atmospheres) and press <ENTER> to leave the Edit Mode.

10.4.7 Upon receiving the actual pressure, the system's microprocessor automatically computes "Span" for the ambient pressure. Note this number for future reference.

[Note: If the instrument has been reset and you have recorded the value of "Span" for the ambient pressure, you may enter it directly in the "Span" column when in the Edit Mode.]

10.5 Flow Calibration

[Note: The temperature and pressure calibrations described above must be performed before undertaking the flow calibration. In addition, the leak check discussed in Section 9.3 must also be undertaken before the flow calibration executed.]

10.5.1 Return the Partisol® sampler to the Main Screen.

10.5.2 The device must be in the "Stop" operating mode to perform a flow calibration. If the hardware is currently in the "Run" operating mode, as shown in the upper right-hand corner of the Main Screen, press <F4: Run/Stp> to enter the "Stop" operating mode.

10.5.3 Carefully remove the size-selective inlet from the hub.

10.5.4 Install a filter cassette containing a 47 mm filter into the filter holder of the hub unit. This filter will be thrown away at the end of this flow calibration.

10.5.5 Display the Calibration Screen (see Figure 4) by pressing <F5: Setup> and then <F2: Calib> when in the Main Screen.

10.5.6 Install the Flow Audit Adapter with its valve open on the end of the sample tube of the hub.

10.5.7 Attach a volumetric flow meter to the Flow Audit Adapter (see Figure 7).

10.5.8 Leave the pump turned off. If it is currently on, press <F6: PumpOff> to turn it off.

10.5.9 Press <F1: Edit> to enter the Edit Mode and move the cursor to the "Act" (actual) column in the row labeled "Flow."

10.5.10 Enter a zero in this position and press <ENTER> to leave the Edit Mode. This procedure causes the microprocessor to compute "Offset," which is the zero offset for the mass flow sensor. Note this number for future reference.

10.5.11 Turn on the pump by pressing <F7: PumpOn> and then press <F2: Hub1> to cause the sample flow to pass through the sample tube of the hub.

10.5.12 Use the <F8: DecrFlw> (continuously decrease flow), <F9: HoldFlw> (maintain current flow rate), and <F10: IncrFlw> (continuously increase flow) keys so that the flow rate in the "Calc" column of the Calibration Screen is approximately 16.7 L/min. As the servo valve in the hub closes and opens to increase and decrease the sample flow rate, the potentiometer value, "Pot," changes. This figure should generally not drop below 0.5 VDC or exceed 4.5 VDC.

10.5.13 Determine the flow in actual L/min using the external flow meter.

10.5.14 Press <F1: Edit> to enter the Edit Mode and move the cursor to the "Act" (actual) column in the row labeled "Flow."

10.5.15 Enter the flow determined by the external flow meter and press <ENTER> to leave the Edit Mode. This procedure causes the microprocessor to compute "Span," which is the span offset for the mass flow sensor. Note this number for future reference.

[Note: If the instrument has been reset and you have recorded the value of "Offset" and "Span" for the flow, you may enter these numbers directly when in the Edit Mode.]

10.5.16 Return to the Main Screen by pressing <ESC> twice.

10.5.17 Restore the sampling hardware to its original state by removing the flow metering hardware and re-installing the size selective inlet on the sample tube of the hub. Remove the filter cassettes from the hub and satellite units, and throw away the filters installed in them.

11. Operation Procedure

The Basic programming mode is the default setting of the Partisol® Sampler, which allows the user to collect samples for 24-h periods from midnight to midnight on each 47 mm filter in the sampling stations of the Partisol® system. The hardware is set for this mode when it is turned on for the first time. Information concerning the sampler's other programming modes may be found in the operating manual.

[Note: Do not attempt operation of the Partisol® Sampler until the hardware is installed according to the instructions in the operating manual. Also refer to the operating manual regarding the entry of appropriate system parameters in the Setup Screen before setting up the software for sampling in the Basic programming mode.]

11.1 The user defines the sampling program (i.e., during which 24-h periods the Partisol® hardware samples) in the Main Screen (see Figure 11). If the sampler is not currently in the Main Screen, press <ESC> until this display appears.

11.2 The right-most column of the screen labeled "Date" contains the only editable information. The user enters the dates in this field during which 24-h samples are to be collected in the hub and satellite units.

11.3 Follow the procedure below with the Main Screen displayed on the sampler to set up a Basic sampling program. If the sampler is currently in the "Run" operating mode, do not switch to the "Stop" operating mode. Leave the device in its current operating mode when executing the steps below.

11.3.1 Exchange the 47 mm collection filters in all sampling stations whose filter status, as shown in the "Stat" column of the Main Screen, is "DONE." If the sampler is being operated for the first time or at a new location, install new filters in each of the system's sampling stations. These filter exchanges and/or installations must be done in accordance with the instructions in Section 7.

11.3.2 Press <F1: Edit> to enter the Edit Mode and change the sampling dates shown in the "Date" column of the Main Screen. The cursor changes from an underline shape to a large square shape when the hardware enters the Edit Mode.

11.3.3 Press <F1: Daily> when in the Edit Mode to set a range of sequential dates automatically across sampling stations beginning with the next full 24-h period. This command affects all sampling stations except for the currently active one (if any), as indicated by "ON" in the "Stats" column. Alternatively, press <F2: Today+1> when in the Edit Mode to assign tomorrow's date to the sampling station on the current line. Perform this action on each line that is to receive a new date, using the cursor keys to move from one date line to another.

11.3.4 Press the arrow keys to move from line to line, and among the day and month areas of each date field on the Main Screen. Press <F3: +>, <F4: ++>, <F6: - ->, and <F7: -> to increment and decrement the values of the day and month areas of each date. The days and months also may be entered directly from the keypad.

[Note: If <ENTER> is pressed after making a change to a field in the Edit Mode, the sampler returns to the View Data Mode. Press <F1: Edit> again to return to the Edit Mode, if wished. Note that using the cursor keys after each edit (not <ENTER>) enables the user to remain in the Edit Mode until all desired values have been changed.]

[Note: The system does not allow the user to change the sampling date of a sampling station that is currently active.]

11.3.5 Leave the Edit Mode by pressing <ENTER> to retain the changes made above. To cancel these edits, press <ESC> and perform the above steps again.

11.3.6 If the Model 2000 sampler is currently in the "Stop" operating mode, as indicated in the upper right-hand corner of the Main Screen, press <F4: Run/Stp> when in the View Data Mode to put the sampler into the "Run" operating mode. Do not change operating modes if the hardware is already in the "Run" operating mode.

12. Interferences

To ensure a proper size cut point when using the R&P PM_{10} inlet, the Partisol® Sampler should only be operated at a volumetric flow rate of 16.7 L/min. The procedure for auditing the flow is described in Section 9.4, while Section 10.5 contains the steps involved in a full calibration of the flow. A status condition "F" appears when the instrument determines that the flow rate is not within 7% of its set point (see Section 6).

13. Performance Criteria and QA

The detailed steps required for filter handling and inspection, conditioning, weighing, and installation is described in Section 7. The Partisol® Sampler contains extensive diagnostics that monitor its operation (see Section 6), indicating whether the hardware is operating within its required bounds. Section 9 contains the procedures necessary to perform a field audit of the sampler.

The most important factors to observe in the assurance of quality data are filter quality and its seating in the filter cassette, the correctness of the flow rate, and the leak tightness of the system.

14. Records

A Filter Log is recommended to record the data relevant to the conditioning, weighing, and exposure of the filter, as well as the computation of PM_{10} concentration averages (see Figure 12). Individual users may want to develop their own documentation to track audits (see Section 9) and calibrations (see Section 10).

15. References

1. Patashnick, H., and G. Rupprecht, "A New Real Time Aerosol Mass Monitoring Instrument: The TEOM®," *Proc.: Advances in Particulate Sampling and Measurement*, EPA-600/9-80-004, Daytona Beach, FL, 1979.

2. Wang, J. C. F., Patashnick, H., and G. Rupprecht, "New Real Time Isokinetic Dust Mass Monitoring System," *J. Air Pollution Control Assn.*, 30(9):1018, 1980.

3. Wang, J. C. F., et al., "Real-Time Total Mass Analysis of Particulates in the Stack of an Industrial Power Plant," *J. Air Pollution Control Assn.*, 33(12):1172, 1983.

4. Patashnick, H., Rupprecht, G., and D. W. Schuerman, "Energy Source for Comet Outbursts," *Nature*, 250(5464), July 1974.

5. Hidy, G. M., and J. R. Brock, "An Assessment of the Global Sources of Tropospheric Aerosols," *Proceedings of the Int. Clean Air Congr. 2nd*, pp. 1088-1097, 1970.

6. Hidy, G. M., and J. R. Brock, *The Dynamics of Aerocolloidal Systems*, Pergamon Press, New York, NY, 1970.

7. Lee, R. E., Jr., and S. Goranson, "A National Air Surveillance Cascade Impactor Network: Variations in Size of Airborne Particulate Matter Over Three-Year Period," *Environ. Sci. Technol.*, 10:1022, 1976.

8. Appel, B. R., Hoffer, E. M., Kothny, E. L., Wall, S. M., Haik, M., and R. M. Knights, "Diurnal and Spatial Variations of Organic Aerosol Constituents in the Los Angeles Basin," *Proceedings: Carbonaceous Particles in the Atmosphere*, March 20-22, 1978. T. Nonokov, ed., Lawrence Berkeley Laboratory, University of California, LBL-9037, pp. 84-90, 1979.

9. Nagda, N. L., Rector, H. E., and M. D. Koontz, *Guidelines for Monitoring Indoor Air Quality*, Hemisphere Publishing Corporation, New York, NY, 1987.

10. 40 CFR, Part 58, Appendix A, B.

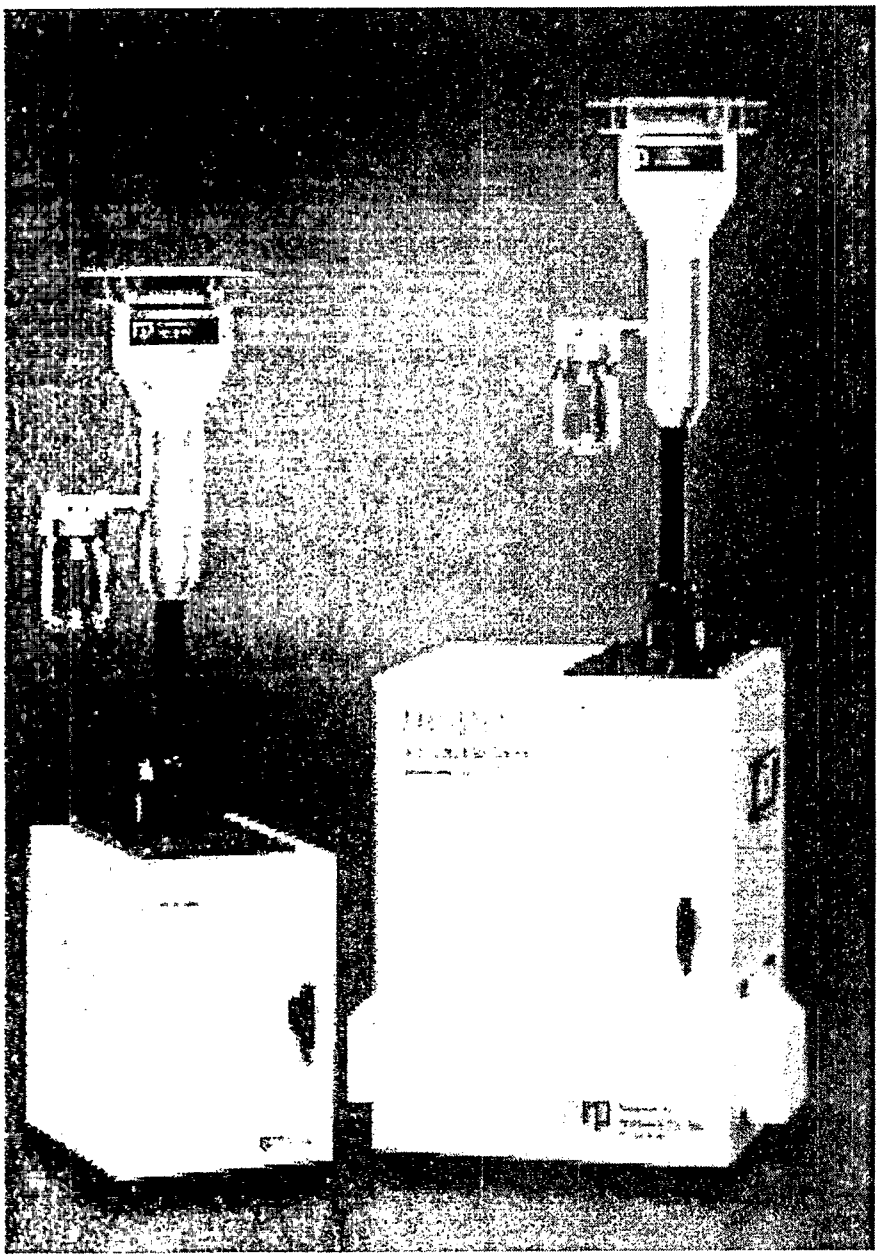

Figure 1. Partisol® Air Sampler, with Satellite on Left and Hub on Right.

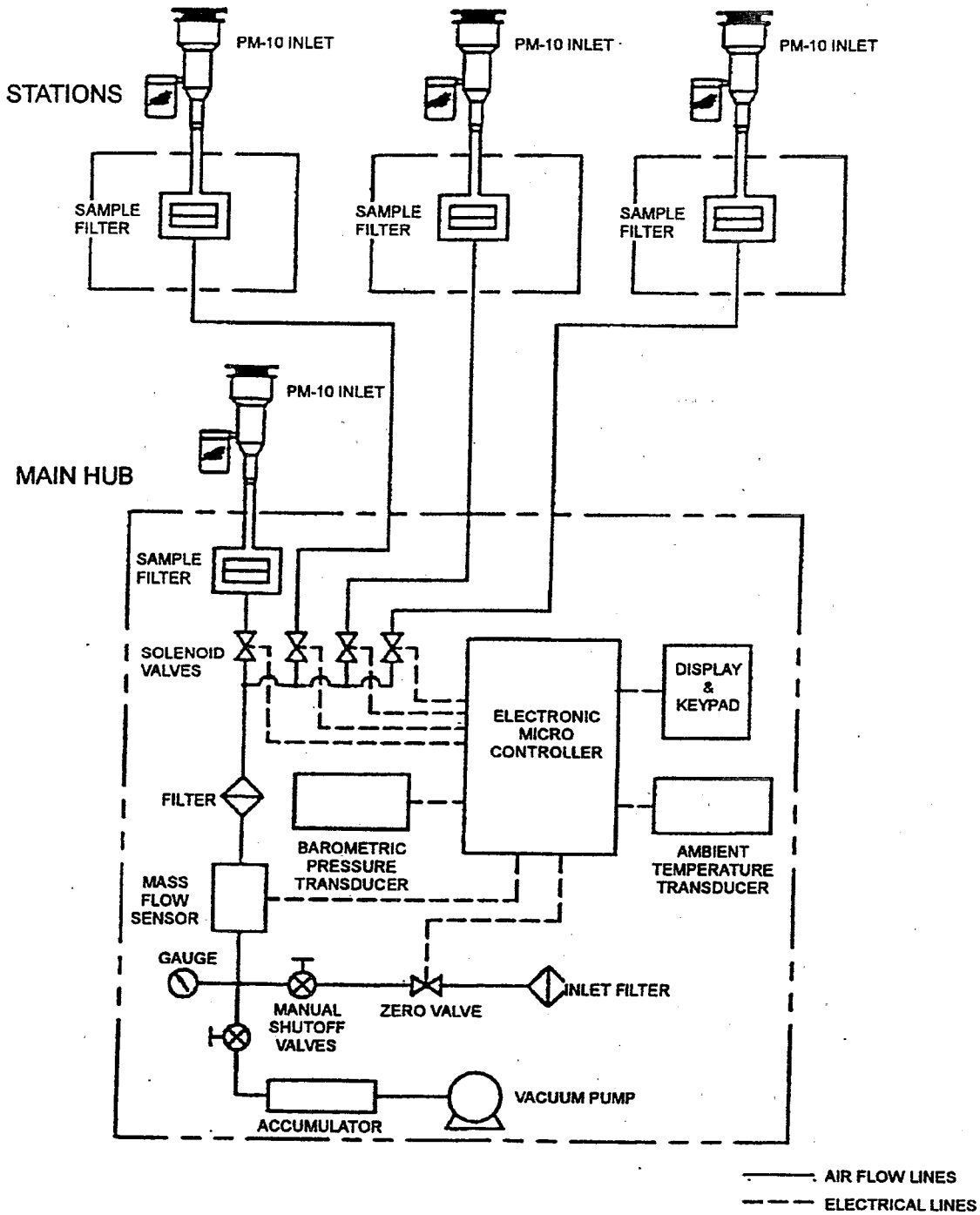

Figure 2. Partisol® Flow Schematic.

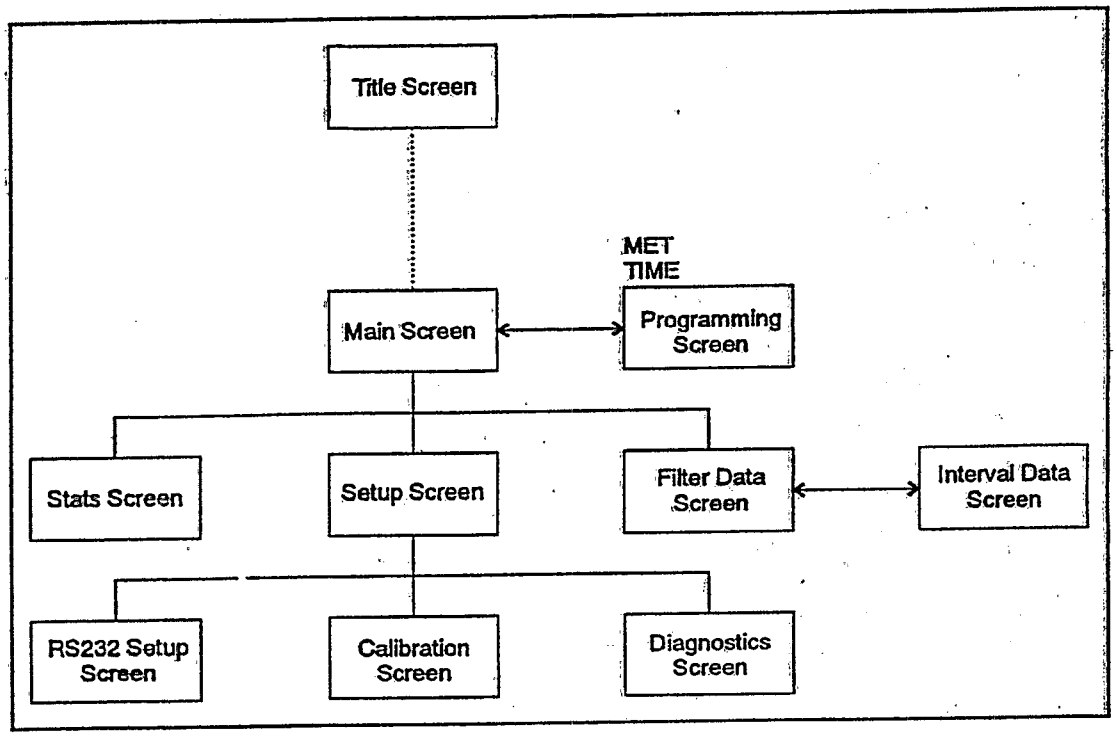

Figure 3. Hierarchy of Screens.

```
BASIC                Calibration                STOP

          Calc    Act     Offset     Span

 A/I:   1.003 0.000     0.0000    1.0000

 Temp:   27.9   0.0               1.0000

 Pres:  0.998 0.000               1.0000

 Flow:   16.7   0.0     0.0000    1.0000

 A/O: 1.00 Pot:3.752 Flow Adj: Hold H1
```

Edit	Hub1	Sat2	Sat3	Sat4	>	
Soft Function Keys In View Data Mode						
Edit	Hub1	Sat2	Sat3	Sat4	>	Unshifted
PumpOff	PumpOn	DecrFlw	HoldFlw	IncrFlw	<	Shifted
Soft Function Keys In Edit Mode						
--	-	+	++	Bksp	>	Unshifted
+/-					<	Shifted

Figure 4. Calibration Screen.

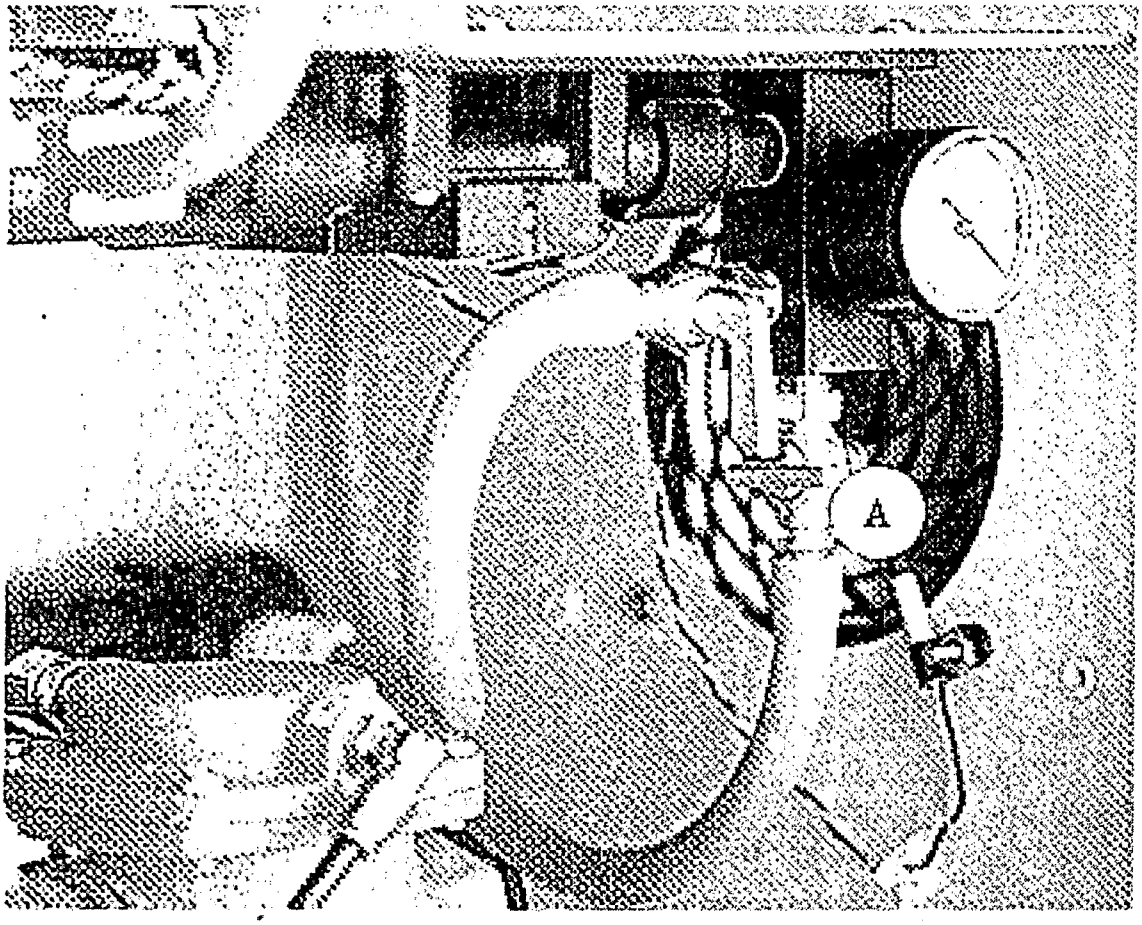

Figure 5. Flow control manual valve (A) shown in its closed position.

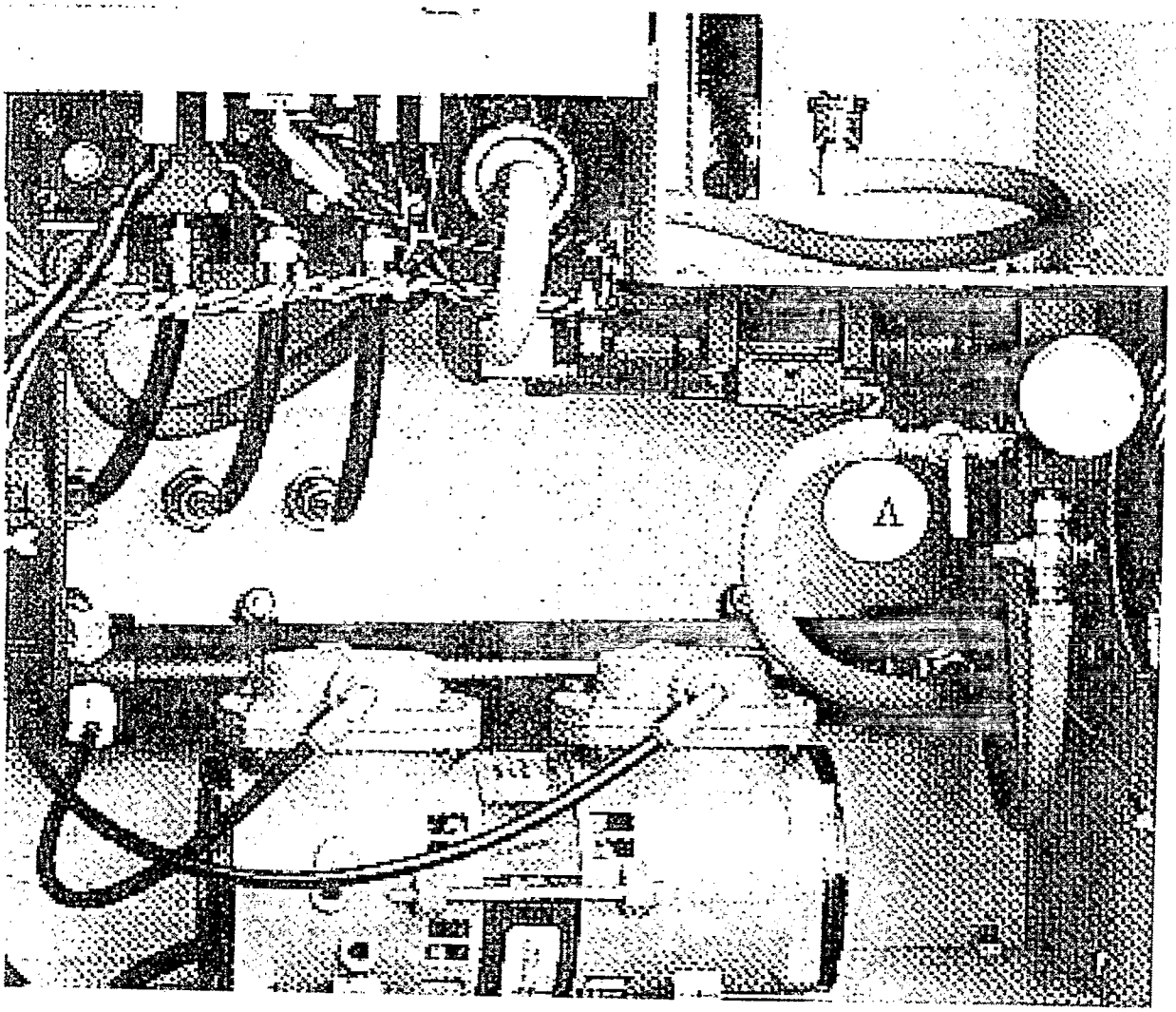

Figure 6. Pump manual valve (A) shown in its closed position.

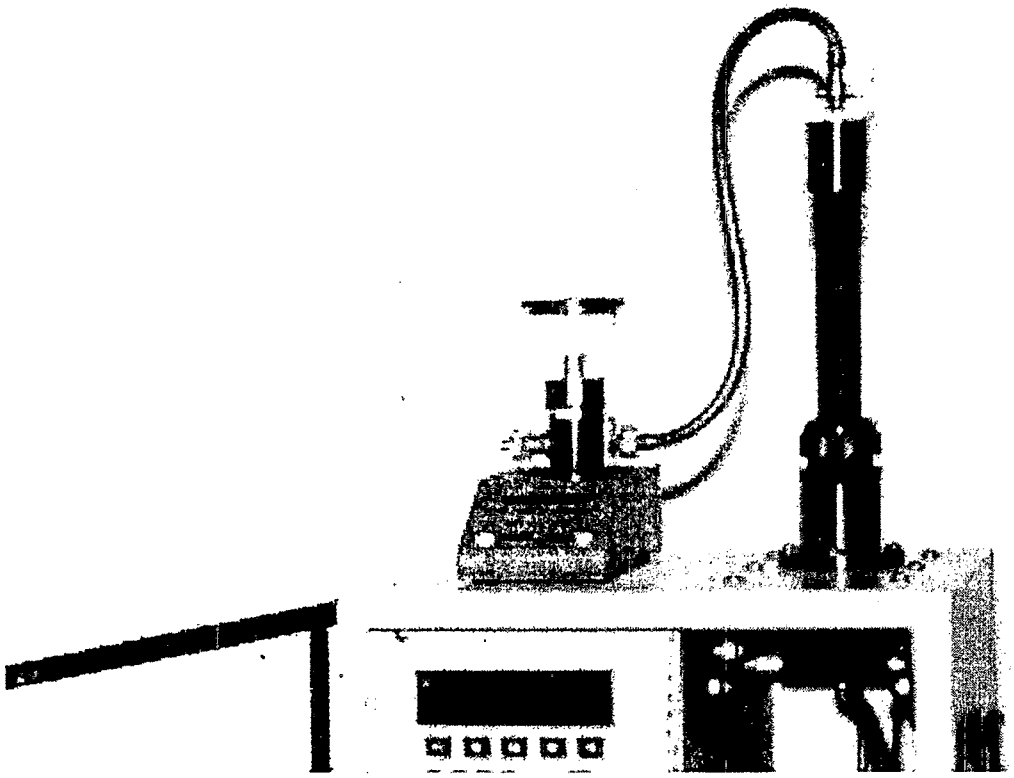

Figure 7. Flow meter (A) attached to flow audit adapter (B).

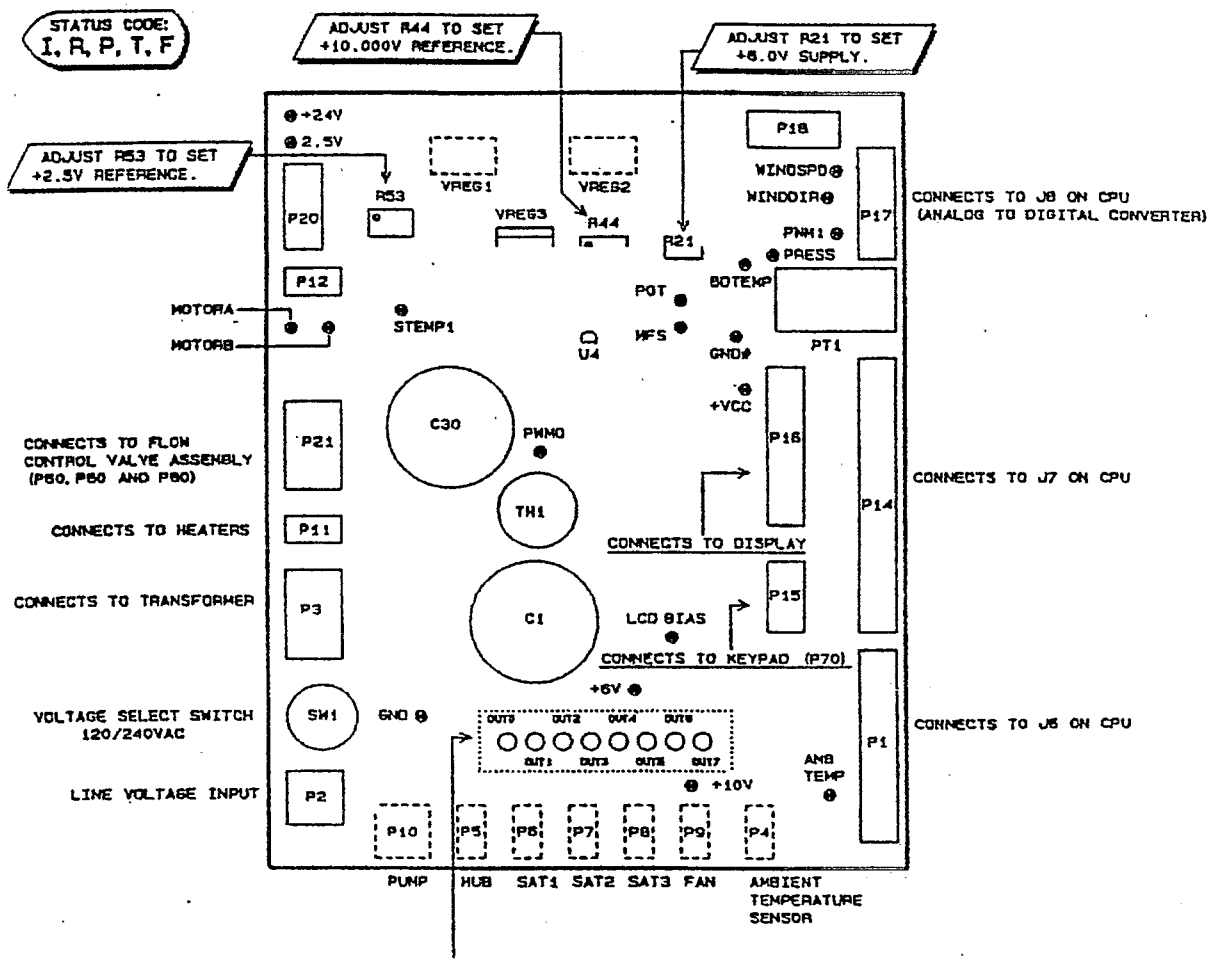

STATUS LIGHT DIRECTORY

OUT0	ON	IF HUB VALVE IS .... ON
OUT1	ON	IF SAT1 VALVE IS ... ON
OUT2	ON	IF SAT2 VALVE IS ... ON
OUT3	ON	IF SAT3 VALVE IS ... ON
OUT4	OFF	IF PUMP IS ..... ON
OUT5	ON	IF FAN IS ..... ON
OUT6	ON	IF LCD BACK LIGHT IS ON
OUT7	OFF	IF HEATERS ARE ..... ON

Figure 8. Layout of Interface Board.

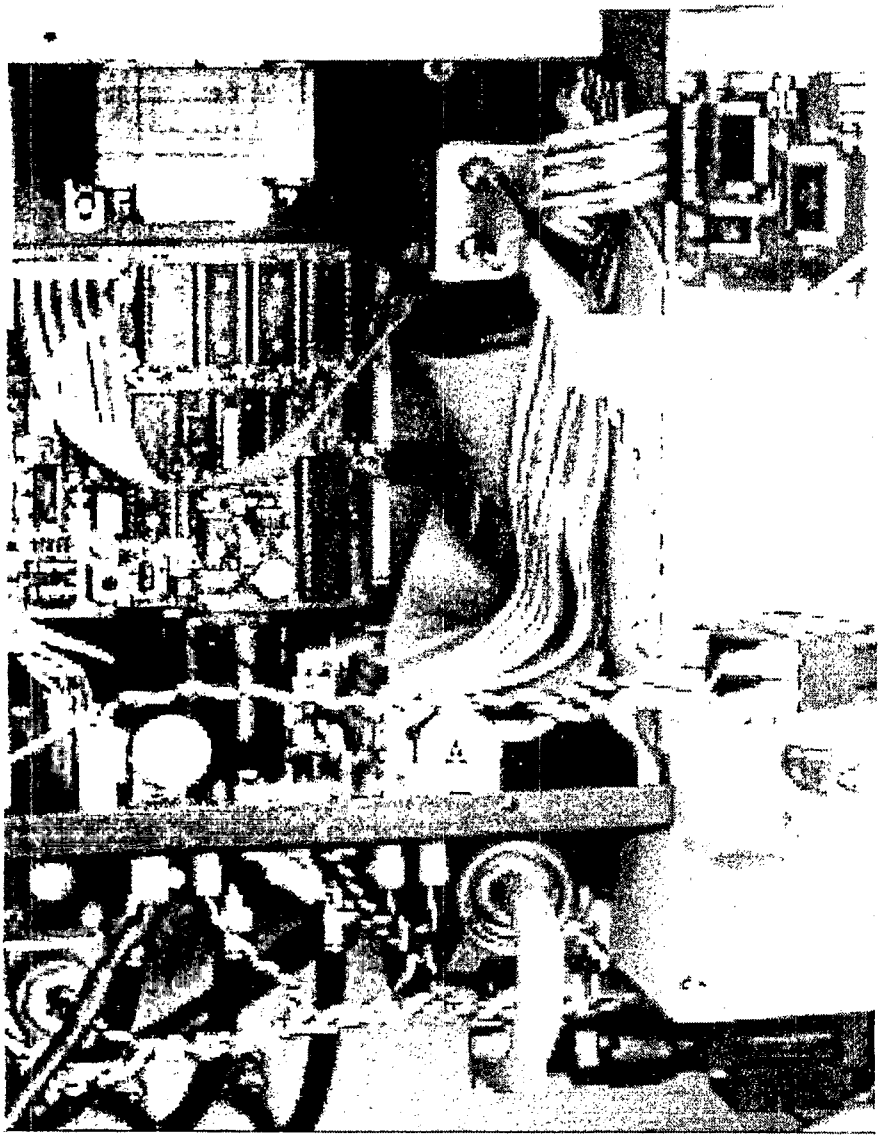

Figure 9. Interface Board (A).

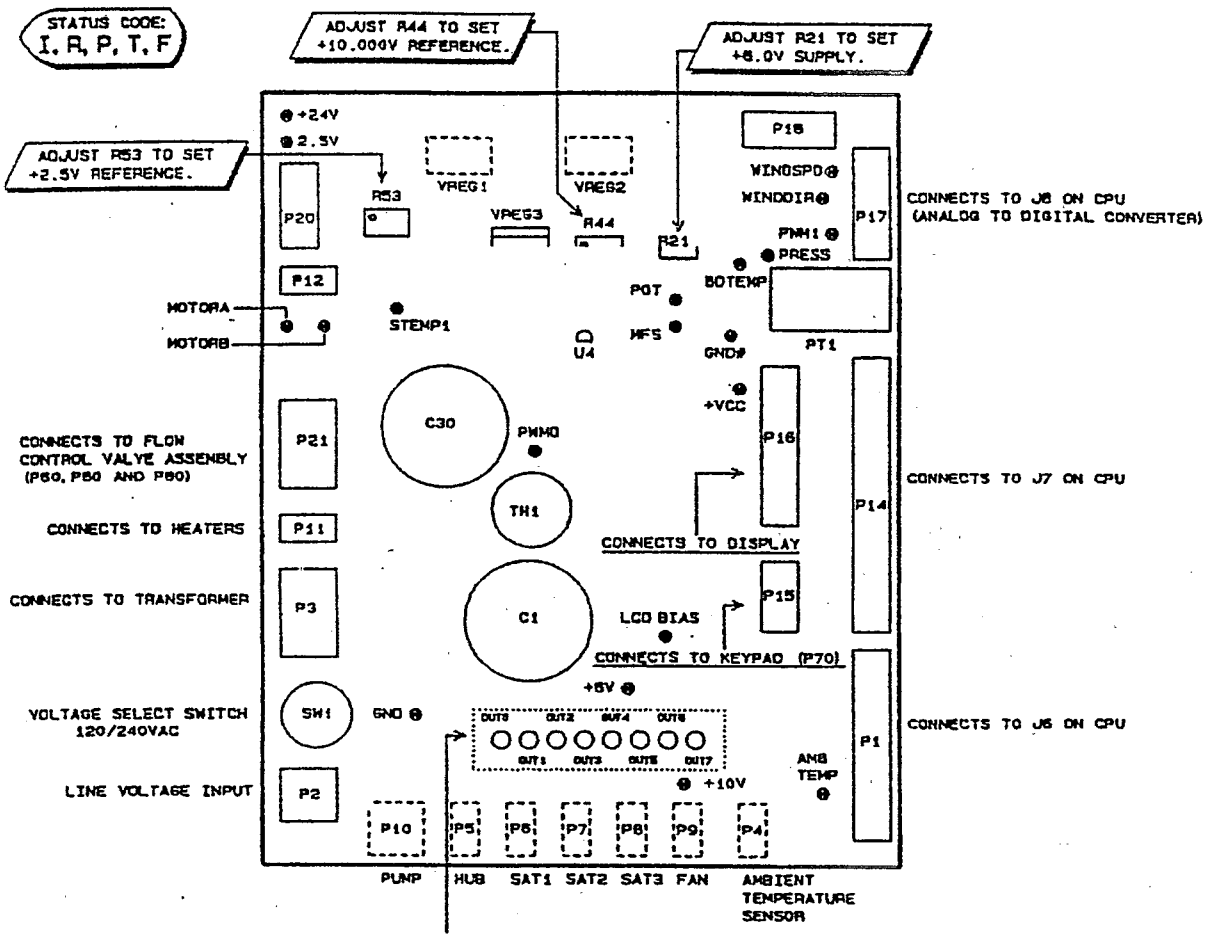

Figure 10. Lead locations on Interface Board.

```
BASIC      Partisol Main Screen        RUN
16:21 03-Oct-93     Curr:2     Status:Ok
    Stat Std Vol    Valid    Total    Date
H1: DONE  24.143    24:00    24:00   02-Oct
S2:   ON  16.342    16:21    16:21   03-Oct
S3:  OFF   0.000     0:00     0:00   04-Oct
S4:
```

Edit	Stats	Storage	Run/Stp	Setup		
Soft Function Keys in View Data Mode						
Edit	Stats	Storage	Run/Stp	Setup		Unshifted
						Shifted
Soft Function Keys in Edit Mode						
Daily	Today+1	+	++	Bksp	>	Unshifted
--	-	+	++	Bksp	<	Shifted

Figure 11. Main screen, basic programming mode.

Filter Log

Partisol® Model 2000 Air Sampler

Filter Number	Initial Conditioning	Initial Weighing		Filter Exposure		Post-Collection Conditioning	Post-Collection Weighing		DW	Concentration DWx10^6/V(STD)
	Conditions	Weights	Conditions	Exposure Period	Exposure Stats	Conditions	Weights	Conditions	W(F)-W(I)	
	RH: Temp: Date: Time:	W1: W2: W3: W(I):	RH: Temp: Date: Time:		Val Time: Tot Time: V(STD)	RH: Temp: Date: Time:	W1: W2: W3: W(I):	RH: Temp: Date: Time:		
	RH: Temp: Date: Time:	W1: W2: W3: W(I):	RH: Temp: Date: Time:		Val Time: Tot Time: V(STD)	RH: Temp: Date: Time:	W1: W2: W3: W(I):	RH: Temp: Date: Time:		
	RH: Temp: Date: Time:	W1: W2: W3: W(I):	RH: Temp: Date: Time:		Val Time: Tot Time: V(STD)	RH: Temp: Date: Time:	W1: W2: W3: W(I):	RH: Temp: Date: Time:		
	RH: Temp: Date: Time:	W1: W2: W3: W(I):	RH: Temp: Date: Time:		Val Time: Tot Time: V(STD)	RH: Temp: Date: Time:	W1: W2: W3: W(I):	RH: Temp: Date: Time:		
	RH: Temp: Date: Time:	W1: W2: W3: W(I):	RH: Temp: Date: Time:		Val Time: Tot Time: V(STD)	RH: Temp: Date: Time:	W1: W2: W3: W(I):	RH: Temp: Date: Time:		
	RH: Temp: Date: Time:	W1: W2: W3: W(I):	RH: Temp: Date: Time:		Val Time: Tot Time: V(STD)	RH: Temp: Date: Time:	W1: W2: W3: W(I):	RH: Temp: Date: Time:		
	RH: Temp: Date: Time:	W1: W2: W3: W(I):	RH: Temp: Date: Time:		Val Time: Tot Time: V(STD)	RH: Temp: Date: Time:	W1: W2: W3: W(I):	RH: Temp: Date: Time:		

Figure 12. Partisol® Filter Log.

EPA/625/R-96/010a

Compendium of Methods for the Determination of Inorganic Compounds in Ambient Air

Compendium Method IO-2.4

CALCULATIONS FOR STANDARD VOLUME

Center for Environmental Research Information
Office of Research and Development
U.S. Environmental Protection Agency
Cincinnati, OH 45268

January 1997

Method IO-2.4

Acknowledgements

This Method is a part of *Compendium of Methods for the Determination of Inorganic Compounds in Ambient Air* (EPA/625/R-96/060a), which was prepared under Contract No. 68-C3-0315, WA No. 2-10, by Midwest Research Institute (MRI), as a subcontractor to Eastern Research Group, Inc. (ERG), and under the sponsorship of the U.S. Environmental Protection Agency (EPA). Justice A. Manning, Center for Environmental Research Information (CERI), and Frank F. McElroy, National Exposure Research Laboratory (NERL), both in the EPA Office of Research and Development, were the project officers responsible for overseeing the preparation of this method. Other support was provided by the following members of the Compendia Workgroup:

- James L. Cheney, Corps of Engineers, Omaha, NB
- Michael F. Davis, U.S. EPA, Region 7, KC, KS
- Joseph B. Elkins Jr., U.S. EPA, OAQPS, RTP, NC
- Robert G. Lewis, U.S. EPA, NERL, RTP, NC
- Justice A. Manning, U.S. EPA, ORD, Cincinnati, OH
- William A. McClenny, U.S. EPA, NERL, RTP, NC
- Frank F. McElroy, U.S. EPA, NERL, RTP, NC
- William T. "Jerry" Winberry, Jr., MRI, Cary, NC

This Method is the result of the efforts of many individuals. Gratitude goes to each person involved in the preparation and review of this methodology.

Author(s)

- William T. "Jerry" Winberry, Jr., MRI, Cary, NC

Peer Reviewers

- David Brant, National Research Center for Coal and Energy, Morgantown, WV
- John Glass, SC Department of Health and Environmental Control, Columbia, SC
- Jim Cheney, U.S. Army Corps of Engineers, Omaha, NB

DISCLAIMER

This Compendium has been subjected to the Agency's peer and administrative review, and it has been approved for publication as an EPA document. Mention of trade names or commercial products does not constitute endorsement or recommendation for use.

Method IO-2.4
Calculating Standard Volume

TABLE OF CONTENTS

	Page
1. Introduction	2.4-1
2. Calculation of Volume to STP	2.4-1
3. Federal Register Citation	2.4-1

Chapter IO-2
INTEGRATED SAMPLING OF SPM IN AMBIENT AIR

Method IO-2.4
CALCULATING STANDARD VOLUME

1. Introduction

1.1 Most atmospheric sampling techniques use a sampling train whereby air containing the pollutant of interest enters the train and passes through a sample collection device.

1.2 The weight of the pollutant collected is compared to the volume of air drawn through the train to extrapolate the concentration of the pollutant in the ambient air. The concentration is usually expressed in terms of $\mu g/m^3$, corrected to EPA's standard temperature and pressure (STP).

2. Calculation of Volume to STP

2.1 To compare gas sampling data collected by various agencies and organizations from around the country, EPA has specified that all gas volumes must be corrected to a set of predetermined standard conditions. For atmospheric or ambient sampling, these conditions are 25°C or 298K and 760 mm Hg.

2.2 The equation used to correct sample volumes (V_s) to EPA standard volume (V_{std}) conditions is:

$$V_{std} = (V_s)(P_{atm}/P_{std})(T_{std}/T_{atm})$$
$$V_{std} = (V_s)(P_{atm}/760 \text{ mm Hg})(298 \text{ K}/T_{atm})$$
$$V_{std} = (V_s)(0.39)(P_{atm}/T_{atm})$$

where:

V_{std} = volume of gas sampled, corrected to EPA's standard pressure (760 mm Hg) and standard temperature (25°C), m^3.

V_s = volume of gas sampled at atmospheric pressure (P_{atm}) and temperature (T_{atm}), m^3.

T_{std} = EPA standard temperature (25°C), 273 + 25 = 298 K.

P_{std} = EPA standard pressure, 760 mmHg.

T_{atm} = average atmospheric temperature during sampling (°C), 273 + 25 = 298K.

P_{atm} = average atmospheric pressure during sampling, mmHg.

0.39 = 298 K/760 mm Hg

3. Federal Register Citation

3.1 The full text of EPA's specifications for correcting volumes to STP can be found in 40 CFR, Part 50, Appendix B.

3.2 All sample volumes must be corrected to STP.

EPA/625/R-96/010a

Compendium of Methods for the Determination of Inorganic Compounds in Ambient Air

Chapter IO-3

CHEMICAL SPECIES ANALYSIS OF FILTER-COLLECTED SUSPENDED PARTICULATE MATTER

OVERVIEW

Center for Environmental Research Information
Office of Research and Development
U.S. Environmental Protection Agency
Cincinnati, OH 45268

January 1997

Chapter IO-3
CHEMICAL SPECIES ANALYSIS OF FILTER-COLLECTED SUSPENDED PARTICULATE MATTER (SPM)

OVERVIEW

As discussed in Chapter IO-2, the EPA's approach toward regulating and monitoring SPM in ambient air has evolved over time. Initially, the EPA was concerned about total concentrations of SPM and lead (Pb); recently, however, interest has focused on smaller particles as well as other types and quantities of various inorganic components of SPM. A comprehensive discussion of the various approved methods and technology used for time-integrated sampling of SPM are presented in Chapter IO-2. These methods principally include:

- High volume samplers for collecting TSP (total suspended particulate with aerodynamic diameters less than 100 μm) and PM_{10} (particulate matter with aerodynamic diameters less than 10 μm); and
- Low volume samplers for collection PM_{10} utilizing dichotomous and Partisol® samplers.

Chapter IO-3 contains the options available for identifying and quantifying the inorganic compounds in SPM. This overview is intended to introduce these analytical options and provide information to help guide the selection of options appropriate to the particular task at hand.

Two methods of sample preparation for quantitative analysis of chemical species in SPM are described in Compendium Method IO-3.1. These methods include hot acid extraction and microwave digestion. Both methods are described in detail in Section IO-3.1. Selecting an appropriate method will depend upon the type of analytical technique used.

Chapter IO-3 includes six options for the quantitative analysis of inorganic compounds in PM. These options are:

Method	Analytical Technique
Method IO-3.2	Flame and graphite furnace atomic absorption spectroscopy (FAA/GFAA)
Method IO-3.3	X-Ray fluorescence spectroscopy (XRF)
Method IO-3.4	Inductively coupled plasma atomic emission spectroscopy (ICP)
Method IO-3.5	Inductively coupled plasma/mass spectroscopy (ICP/MS)
Method IO-3.6	Proton induced X-Ray emission spectroscopy (PIXE)
Method IO-3.7	Neutron activation Analysis (NAA)

These options are described in detail in Methods IO-3.2 through IO-3.7. A brief summary of each of the techniques is provided below.

Method IO-3.2
Atomic Absorption Spectroscopy (FAA and GFAA)

The two atomic absorption analysis options included in Compendium Method IO-3.2, FAA and GFAA, are similar in that the measurement principle for these two options is the same. However, they differ in how the sample is introduced into the instrument. Both types of atomic absorption spectroscopy involve irradiating the sample with light of a single wavelength and measuring how much of the input light is absorbed. Each element absorbs light at a characteristic wavelength; therefore, analysis for each element requires a different light source, and only one element can be determined at a time. In FAA, the sample is atomized and introduced into the optical beam using a flame, typically air/acetylene or nitrous oxide/acetylene. In GFAA, a graphite furnace electrothermal atomizer is used. These analytical techniques are destructive and require that the sample be extracted or digested for introduction into the system in solution. The detection limit of GFAA is typically about two orders of magnitude better than FAA. High-volume samplers (hi-vols) are typically used for sampling when FAA or GFAA analysis is planned, as documented in Figure 1.

Method IO-3.3
X-ray Fluorescence Spectroscopy (XRF)

In XRF analysis, the sample is irradiated with a beam of x-rays, and the elements in the sample emit X-rays at characteristic wavelengths. The wavelengths that are detected indicate which elements are present, and the quantity of each element is determined from the intensity of the X-rays at each characteristic wavelength. X-ray fluorescence spectrometry can be used for all elements with atomic weights from 11 (sodium) to 92 (uranium), and multiple elements can be determined simultaneously. This analysis technique is nondestructive and requires minimal sample preparation--the filter is inserted directly into the instrument for analysis. This technology is relatively inexpensive; however, the detection limit is higher than other analysis techniques. As indicated in Figure 1, analysis by XRF typically involves collection of SPM by dichotomous sampler or the Partisol® sampler.

Method IO-3.4
Inductively Coupled Plasma Atomic Emission Spectroscopy (ICP)

In ICP analysis, the sample is excited using an argon plasma "torch." When the excited atoms return to their normal state, each element emits a characteristic wavelength of light. The wavelengths detected and their intensities indicate the presence and amounts of particular elements. Up to 48 elements can be determined simultaneously. As with FAA and GFAA, the SPM sample must be extracted and digested for ICP analysis, and the material introduced into the instrument is destroyed during analysis. An ICP instrument is more costly than FAA or GFAA instruments. The ICP detection limit for many elements is equal to or somewhat better than that for FAA. (With particular elements, however, one or the other analysis technique is very superior to the other.) The GFAA detection limit is better than that for ICP for most elements. As indicated in Figure 1, hi-vols are typically used for sampling when ICP analysis is planned.

Method IO-3.5
Inductively Coupled Plasma/Mass Spectroscopy (ICP/MS)

Analysis by ICP/MS also uses argon plasma torch to generate elemental ions for separation and identification by mass spectrometry (MS). This analysis technique allows many more than 60 elements to be determined simultaneously, and even the isotopes of an element can be determined. For ICP/MS analysis, the SPM sample must be extracted or digested, and the analysis is destructive. An ICP/MS instrument is the most costly of those included in this Chapter, and its detection limit is the lowest. Sampling is typically conducted using hi-vols when ICP/MS analysis is planned, as shown in Figure 1.

Method IO-3.6
Proton Induced X-ray Emission Spectroscopy (PIXE)

PIXE analysis is very similar to XRF analysis in that the sample is irradiated by a high energy source, in this case high energy protons, to remove inner shell electrons. Fluorescent x-ray photons are detected using the same detection methods as XRF. Analysis by PIXE also typically involves collecting SPM by dichotomous sampler, or by Partisol® sampler.

Method IO-3.7
Neutron Activation Analysis (NAA)

In NAA analysis, the sample and an appropriate standard are exposed to a high neutron thermal flux in a nuclear reactor or accelerator. The sample elements are transformed into radioactive isotopes that emit gamma rays. The distribution or spectrum of energy of the gamma rays can be measured to determine the specific isotopes present. The intensity of the gamma rays can also be measured and is proportional to the amounts of elements present. NAA is a simultaneous, multi-element method and does not generally require significant sample preparation. It is highly sensitive, though it does not quantify elements such as silicon, nickel, cobalt, and lead. NAA is a non-destructive technique and does not require the addition of any foreign materials for irradiation; thus, the problem of reagent introduced contaminates is avoided. Analysis by NAA is compatible with sampling by dichotomous sampler, Partisol® sampler and continuous PM_{10} sampler.

Comparative Selection Criteria

Some of the analytical techniques listed above typically are used only with particular sampling methods. The relationships between sampling technologies and compatible analytical techniques is illustrated in Figure 1. Furthermore, the type of filter medium used to capture the sample is a factor in the choice of analytical technique and vice-versa.

Most importantly, the choice of analytical method will depend on the inorganic compounds of interest and the detection limits desired. A relative comparison of the ranges of detection limits that are typical for the various techniques is provided in Figure 2. Table 1 contains a more detailed summary of the species measured and the respective minimum detection limits associated with analytical options discussed in this Chapter.

Some of the advantages and disadvantages associated with the analytical options presented in Compendium Method IO-3 are summarized in Figure 3. While factors such as element specificity and sensitivity are critically important, considerations such as cost and throughput (the number of samples and number of elements to be determined per sample) are also important. A comparison of the typical throughput for the analytical options in Compendium Method IO-3 is provided in Figure 4.

Unfortunately, no one analytical method can address all data quality objectives for a particular ambient air monitoring program. Each method has its own attributes, specificities, advantages, and disadvantages, as previously discussed. However, Compendium Method IO-3 attempts to encompass into one chapter the various analytical options, in a step-by-step methodology, to facilitate accurate and reliable data for SPM and metal concentration in the ambient air.

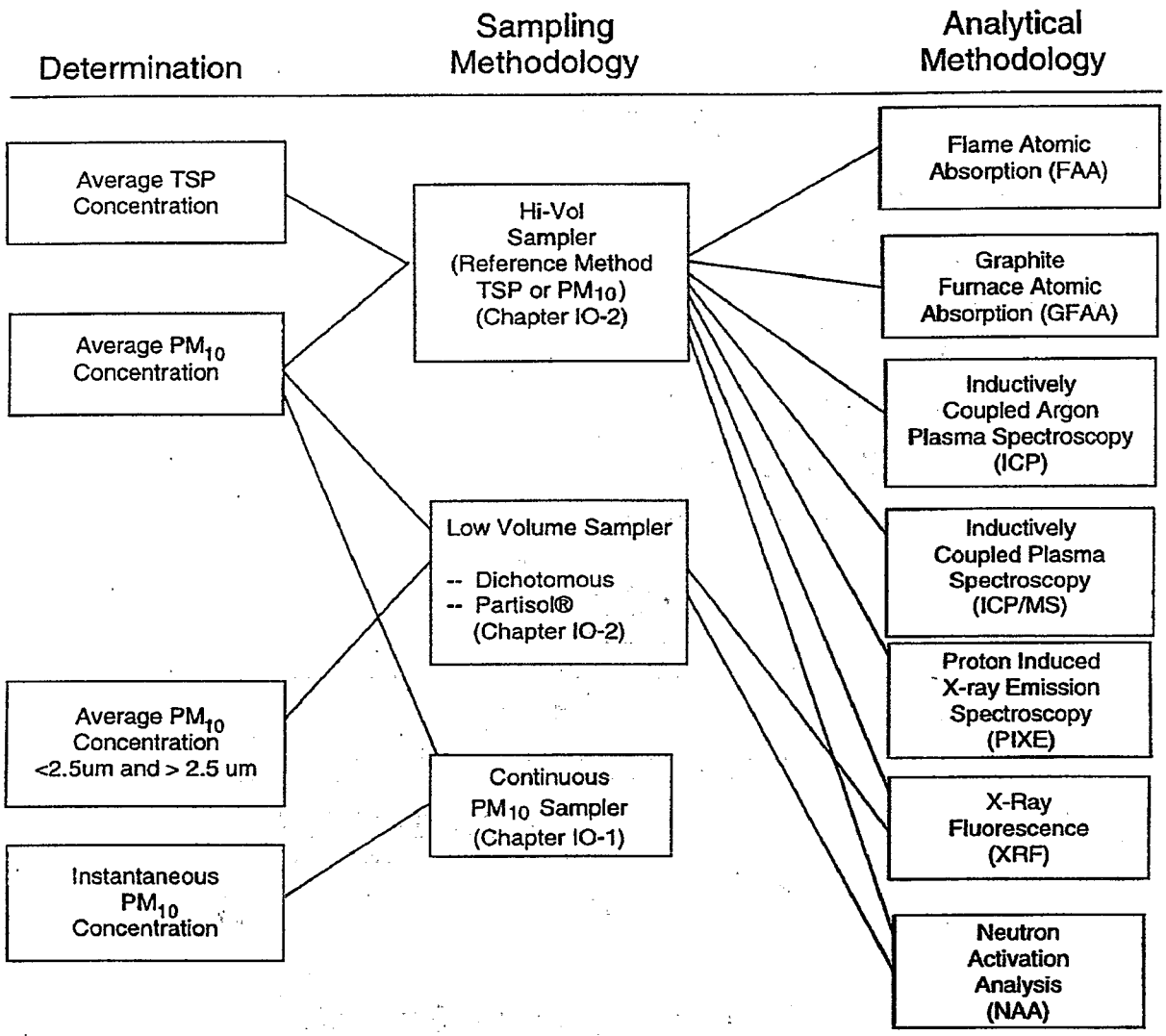

Figure 1. Relationship between Chapter IO-1 and IO-2 sampling technologies and Chapter IO-3 analytical techniques.

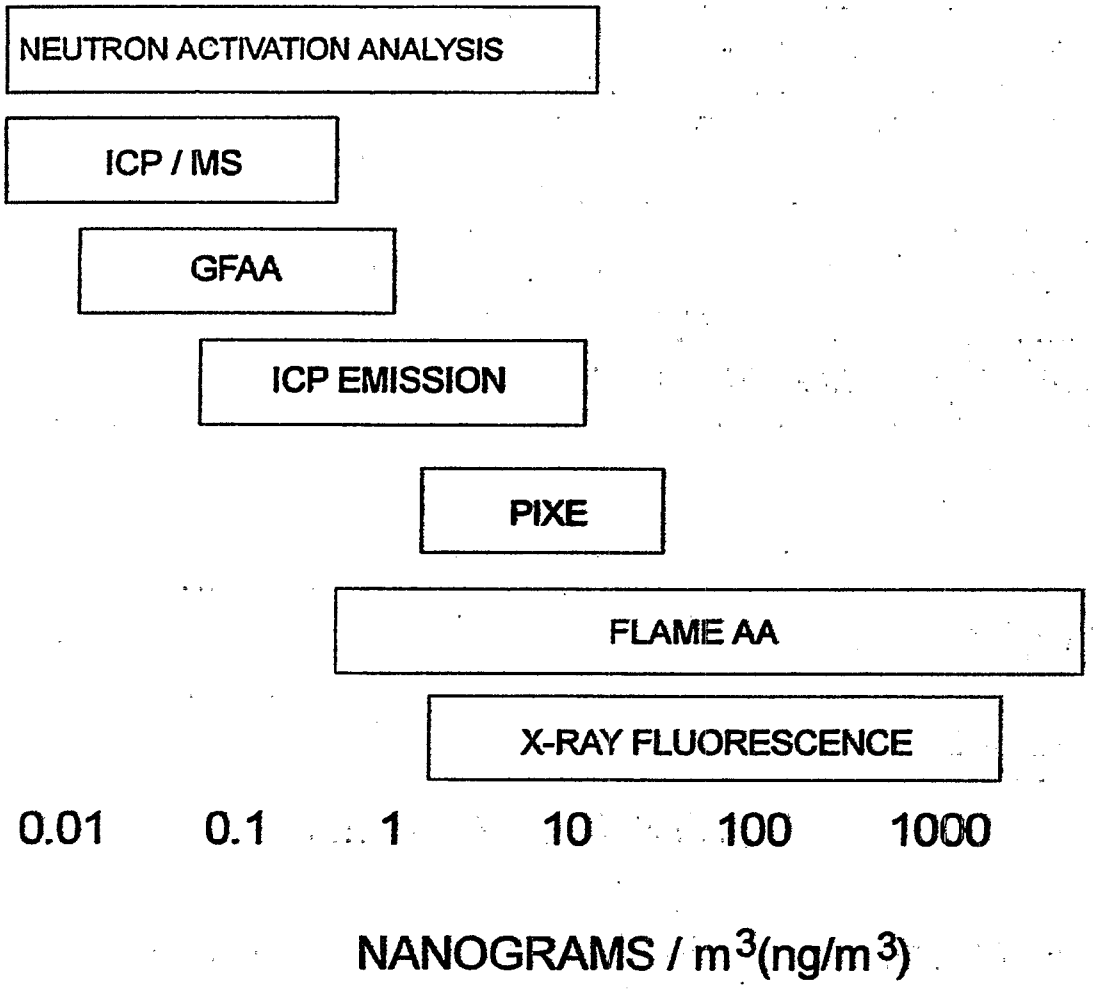

Figure 2. Typical detection limits for Chapter IO-3 analytical options.

	ADVANTAGE	DISADVANTAGE
FLAME AA	• easy to use • extensive applications • low detection limits	• higher concentration • sample dissolution required • one (1) element at a time
GFAA	• well documented applications • lower detection limits than Flame AA	• limited working range sample • low sample throughput • one element at a time • more operator skill
ICP	• multi-element • high sample throughput • well documented applications • intermediate operator skill • linear range over 5 orders of magnitude	• more expensive (~120K) • sample dissolution is required • other elements can interfere
ICP / MS	• multi-elements • low concentrations • isotopic analysis • intermediate operator skills	• most expensive (~250K) • limited documented applications
PIXE	• multielement • non-destructive • minimal sample preparation	• standard/sample must match closely (matrix) • matrix offsets and background impurities may be a problem
XRF	• multielement • non-destructive • minimal sample preparation	• standard/sample must match closely (matrix) • matrix offsets and background impurities may be a problem
NAA	• multielement • non-destructive • minimal sample preparation • % to ppb range • high sample throughput • well documented applications	• some elemental interferences • standard sample matrix corrections • required access to research nuclear reactor

Figure 3. Advantages/disadvantages associated with analytical options in Chapter IO-3.

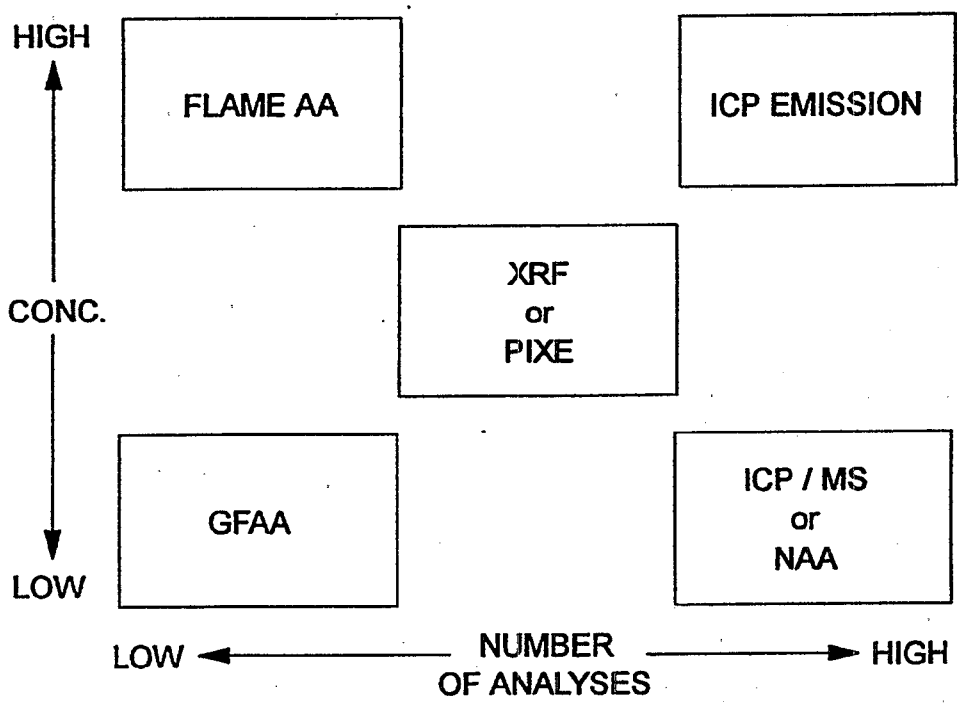

Figure 4. Throughput of analytical options in Chapter IO-3.

Table 1. Minimum Detection Limits (ng/m3) of Air Filter Samples For Different Chapter IO-3 Analytical Methods[a,b]

Species	Analytical Technique						
	NAA	XRF	PIXE	Flame AAS	Graphite Furnace AAS	ICP	ICP/MS
Ag	0.12	6	NA	4	0.005	1	1.01
Al	24	5	12	30	0.01	20	1.01
As	0.2	0.8	1	100	0.2	50	1.10
Au	NA	2	NA	21	0.1	2.1	NA
Ba	6	25	NA	8	0.04	0.05	NA
Be	NA	NA	NA	2	0.05	0.06	0.02
Br	0.4	0.5	1	NA	NA	NA	NA
Ca	94	2	4	1	0.05	0.04	NA
Cd	4	6	NA	1	0.003	0.4	0.02
Ce	0.06	NA	NA	NA	NA	52	NA
Cl	5	5	8	NA	NA	NA	NA
Co	0.02	0.4	NA	6	0.02	1	0.01
Cr	0.2	1	2	2	0.01	2	0.01
Cs	0.03	NA	NA	NA	NA	NA	NA
Cu	30	0.5	1	4	0.02	0.3	0.01
Eu	0.006	NA	NA	21	NA	0.08	NA
Fe	4	0.7	3	4	0.02	0.5	0.01
Ga	0.5	0.9	1	52	NA	42	NA
Hf	0.01	NA	NA	2,000	NA	16	NA
Hg	NA	1	NA	500	21	26	NA
I	1	NA	NA	NA	NA	NA	NA
In	0.006	6	NA	31	NA	63	NA
K	24	3	5	2	0.02	NA	NA
La	0.05	30	NA	2,000	NA	10	NA
Mg	300	NA	20	0.3	0.004	0.02	0.02
Mn	0.12	0.8	2	1	0.01	0.1	0.02
Mo	NA	1	5	31	0.02	5	0.02
Na	2	NA	60	0.2	<0.05	NA	NA
Ni	NA	0.4	1	5	0.1	2	0.02
P	NA	3	8	100,000	40	50	NA
Pb	NA	1	3	10	0.05	10	0.01
Pd	NA	5	NA	10	NA	42	NA
Rb	6	0.5	2	NA	NA	NA	NA
S	6,000	2	8	NA	NA	10	NA
Sb	0.06	9	NA	31	0.2	31	0.01

Table 1. Minimum Detection Limits (ng/m^3) of Air Filter Samples For Different Chapter IO-3 Methods (cont).

Species	Analytical Technique						
	NAA	XRF	PIXE	Flame AAS	Graphite Furnace AAS	ICP	ICP/MS
Sc	0.001	NA	NA	50	NA	0.06	NA
Se	0.06	0.6	1	100	0.5	25	1.10
Si	NA	3	9	85	0.1	3	NA
Sm	0.01	NA	NA	2,000	NA	52	NA
Sn	NA	8	NA	31	0.2	21	0.01
Sr	18	0.5	2	4	0.2	0.03	NA
Ta	0.02	NA	NA	2,000	NA	26	NA
Th	0.01	NA	NA	NA	NA	63	NA
Ti	65	2	3	95	NA	0.3	0.01
Tl	NA	1	NA	21	0.1	42	0.01
U	NA	1	NA	25,000	NA	21	0.01
V	0.6	1	3	52	0.2	0.7	0.01
W	0.2	NA	NA	1,000	NA	31	0.01
Y	NA	0.6	NA	300	NA	0.1	0.01
Zn	3	0.5	1	1	0.001	1	0.01
Zr	NA	0.8	3	1,000	NA	0.6	
Cl	NA	NA	NA	NA	NA	NA	NA
NH_4	NA	NA	NA	NA	NA	NA	NA
NO_3	NA	NA	NA	NA	NA	NA	NA
SO_4	NA	NA	NA	NA	NA	NA	NA
Elemental Carbon	NA	NA	NA	NA	NA	NA	NA
Organic Carbon	NA	NA	NA	NA	NA	NA	NA

a Minimum detection limit is three times the standard deviation of the blank for a filter of 1 mb/cm^2 areal density.
ICP = Inductively Coupled Plasma Emission Spectroscopy.
AAS = Atomic Absorption Spectrophotometry.
PIXE = Proton Induced X-ray Emissions.
XRF = X-ray Fluorescence.
NAA = Instrumental Neutron Activation Analysis.

b Chow, J. C., "Measurement Methods to Determine Compliance with Ambient Air Quality Standards for Suspended Particles," *J. Air and Waste Manage. Assoc.*, Vol. 45:320-382, 1995.

EPA/625/R-96/010a

Compendium of Methods for the Determination of Inorganic Compounds in Ambient Air

Compendium Method IO-3.1

SELECTION, PREPARATION AND EXTRACTION OF FILTER MATERIAL

Center for Environmental Research Information
Office of Research and Development
U.S. Environmental Protection Agency
Cincinnati, OH 45268

January 1997

Method IO-3.1

Acknowledgements

This Method is a part of *Compendium of Methods for the Determination of Inorganic Compounds in Ambient Air* (EPA/625/R-96/060a), which was prepared under Contract No. 68-C3-0315, WA No. 2-10, by Midwest Research Institute (MRI), as a subcontractor to Eastern Research Group, Inc. (ERG), and under the sponsorship of the U.S. Environmental Protection Agency (EPA). Justice A. Manning, Center for Environmental Research Information (CERI), and Frank F. McElroy, National Exposure Research Laboratory (NERL), both in the EPA Office of Research and Development, were the project officers responsible for overseeing the preparation of this method. Other support was provided by the following members of the Compendia Workgroup:

- James L. Cheney, Corps of Engineers, Omaha, NB
- Michael F. Davis, U.S. EPA, Region 7, KC, KS
- Joseph B. Elkins Jr., U.S. EPA, OAQPS, RTP, NC
- Robert G. Lewis, U.S. EPA, NERL, RTP, NC
- Justice A. Manning, U.S. EPA, ORD, Cincinnati, OH
- William A. McClenny, U.S. EPA, NERL, RTP, NC
- Frank F. McElroy, U.S. EPA, NERL, RTP, NC
- William T. "Jerry" Winberry, Jr., MRI, Cary, NC

This Method is the result of the efforts of many individuals. Gratitude goes to each person involved in the preparation and review of this methodology.

Author(s)

- Avie Mainey, Midwest Research Institute, Kansas City, MO
- William T. "Jerry" Winberry, Jr., MRI, Cary, NC

Peer Reviewers

- David Brant, National Research Center for Coal and Energy, Morgantown, WV
- John Glass, SC Department of Health and Environmental Control, Columbia, SC
- Jim Cheney, U.S. Army Corps of Engineers, Omaha, NB
- Dewayne Ehman, Texas Natural Resource Conservation Committee, Austin, TX
- Gary Wester, Midwest Research Institute, Kansas City, MO

DISCLAIMER

This Compendium has been subjected to the Agency's peer and administrative review, and it has been approved for publication as an EPA document. Mention of trade names or commercial products does not constitute endorsement or recommendation for use.

Method IO-3.1
Selection, Preparation and Extraction of Filter Material

TABLE OF CONTENTS

		Page
1.	Scope	3.1-1
2.	Applicable Documents	3.1-1
	2.1 ASTM Documents	3.1-1
	2.2 Other Documents	3.1-2
3.	Apparatus	3.1-2
	3.1 Equipment For Gravimetric Analysis	3.1-2
	3.2 Microwave Digestion Apparatus and Materials	3.1-2
	3.3 Hot Acid Extraction Apparatus and Materials	3.1-3
4.	Filter Medium Selection	3.1-4
	4.1 Introduction	3.1-4
	4.2 Visual Filter Inspection	3.1-5
5.	Gravimetric Determination	3.1-6
	5.1 Introduction	3.1-6
	5.2 High Volume Filter Weighing Procedure	3.1-6
	5.3 Dichotomous Filter Weighing Procedure	3.1-8
	5.4 Transport of Filters	3.1-9
6.	Extraction of Glass Fiber Filters in Preparation for Metal Analysis	3.1-10
	6.1 Introduction	3.1-10
	6.2 Microwave Extraction Procedure	3.1-10
	6.3 Hot Acid Extraction Procedure	3.1-14

Chapter IO-3
CHEMICAL SPECIES ANALYSIS OF FILTER-COLLECTED SUSPENDED PARTICULATE MATTER (SPM)

Method IO-3.1
SELECTION, PREPARATION AND EXTRACTION OF FILTER MATERIAL

1. Scope

1.1 This methodology consists of (1) filter media selection, (2) numbering and pre-field tare weighing quartz fiber and dichotomous ambient air filters, (3) post-field final weighing, and (4) subsequent microwave or hot acid extraction for metal analysis by ICP, AA, ICP/MS or GFAA.

1.2 Pre-field filters are conditioned in a room of constant humidity and temperature and are gravimetrically tared. After air samples have been collected, the filters are returned to the laboratory and conditioned as before and weighed. The final filter weight minus the tare weight is calculated. The procedure for the weighing of filters is based on 40 CFR 50, Appendix B, entitled "*Reference Method for the Determination of Suspended Matter in the Atmosphere (High-Volume Method).*"

1.3 After the post-field filter final weights have been obtained, the filter is subsampled by cutting a filter strip consisting of one-ninth of the overall filter and digested using a microwave or hot acid extraction technique; these extracts are then analyzed by one of many analytical techniques. The results are multiplied by a factor of 9 to obtain the actual total μg of each metal found on the entire 8" x 10" filter. Based upon the analysis of a blank filter, background metal concentration may be subtracted from the total metal concentration to get a net value. Therefore, the analytical results represent the total μg found on the 8" x 10" filter but do not represent the volume of air sampled.

1.4 Sectioning the filter for extraction is based on 40 CFR 50, Appendix B entitled "*Determination of Lead in Suspended Particle Matter Collected From Ambient Air.*" The procedure for the microwave extraction is based on a method developed by EPA entitled *Microwave Extraction of Glass-Fiber Filters*, as identified in Section 2.2. This procedure has been modified for extracting quartz fiber filters.

2. Applicable Documents

2.1 ASTM Documents

- D4096 *Application of the High Volume Sample Method for Collection and Mass Determination of Airborne Particle Matter.*
- D1356 *Definition of Terms Related to Atmospheric Sampling and Analysis.*
- D1357 *Practice for Planning the Sampling of the Ambient Atmosphere.*
- D2986 *Method for Evaluation of Air Assay Media by the Monodisperse DOP (Dioctyl Phthalate) Smoke Test.*

2.2 Other Documents

- U. S. Environmental Protection Agency, *Quality Assurance Handbook for Air Pollution Measurement Systems, Volume I: A Field Guide for Environmental Quality Assurance*, EPA-600/R-94/038a.
- U. S. Environmental Protection Agency, *Quality Assurance Handbook for Air Pollution Measurement Systems, Volume II: Ambient Air Specific Methods (Interim Edition)*, EPA-600/R-94/038b.
- *Reference Method for the Determination of Particulate Matter in the Atmosphere*, Code of Federal Regulations (40 CFR 50, Appendix J).
- *Reference Method for the Determination of Suspended Particulates in the Atmosphere (High Volume Method)*, Code of Federal Regulations (40 CFR 50, Appendix B).
- *Reference Method for the Determination of Lead in Suspended Particulate Matter Collected from Ambient Air*, Federal Register 43 (194): 46258-46261.
- U. S. Environmental Protection Agency, *Microwave Extraction of Glass Fiber Filters*, Method Research and Development Division, RTP, NC 1989.

3. Apparatus

3.1 Equipment For Gravimetric Analysis

3.1.1 Controlled Temperature. Temperature between 15 and 30°C with less than ±2°C variation during equilibration period.

3.1.2 Controlled Humidity. Less than 50% relative humidity, constant within ±5%

3.1.3 Analytical Balance. Sensitive to 0.1 mg, with weighing chamber designed to accepted an unfolded 20.3 x 25.4 cm (8" x 10") filter.

3.1.4 Area Light Source. Similar to X-ray film viewer to backlight filters for visual inspection.

3.1.5 Numbering Device. Capable of printing identification numbers on the filters before they are placed in the filter conditioning environment if not numbered by the supplier.

3.1.6 Hygrothermograph. Capable of recording temperature and relative humidity in the weighing room.

3.2 Microwave Digestion Apparatus and Materials

3.2.1 Microwave Digestive System and Capping Station. With programmable power settings up to 600 watts, best source.

[Note: Commercial kitchen or home-use microwave should NOT be used for digesting samples. The oven cavity must be corrosion resistant and well ventilated. All electronics must be protected against corrosion for safe operation.]

3.2.2 PFA Teflon® Digestion Vessels. Capable of withstanding pressures of up to 120 psi. Pressure ventime vessels capable of controlled pressure relief at pressures exceeding 120 psi (60-120 mL capacity), best source.

3.2.3 Teflon® PFA Overflow Vessel. Double ported (60-120 mL capacity), best source.

3.2.4 Rotating Table. Uniform exposure of samples within the oven.

3.2.5 Volumetric Glassware. 50-100 mL capacity (Class A borosilicate).

3.2.6 Bottles, Linear Polyethylene or Polypropylene with Leakproof Caps, for Storing Samples. Teflon® bottles for storing multielement standards (500 mL, 125 mL, and 30 mL), best source.

3.2.7 Centrifuge Tubes. Oak Ridge polysulfone tubes with screw caps of polypropylene, 30 mL.

3.2.8 Nylon or Teflon® 0.45 μg Syringe Filters. Acrodisc® No. 4438 or equivalent and syringes for rapid nonmetals contributing filtering.

3.2.9 Sterile Polypropylene Tubes with Screw Caps of Polypropylene, 15 mL Capacity. Best source.

3.2.10 Pipette. Automatic dispensing with an accuracy of setting 0.1 mL or better and repeatability of 20 μL, Grumman Automatic Dispensing Pipette, Model ADP-30DT or equivalent.

3.2.11 Particle Mask. 3M, No. 8500, to be worn while cutting and handling glass-fiber filters.

3.2.12 Template. Aid in sectioning the glass fiber filter. Federal Register 43 (194): 46258-46261.

3.2.13 Pizza Cutter, Thin Wheel. Clean razor blade (<1 mm).

3.2.14 Vortex Mixer. VWR2 variable speed or equivalent.

3.2.15 Hydrochloric Acid. Baker Instra-Analyzed, concentrated (36.5%-38%/12.3 M) or equivalent, for preparing samples.

3.2.16 Nitric Acid. Baker Instra-Analyzed, concentrated (70% 16M) or equivalent, for preparing samples.

3.2.17 ASTM Type II Water. ASTM D193.

3.3 Hot Acid Extraction Apparatus and Materials

3.3.1 Thermolyne Model 2200 Hot-Plate or Equivalent.

[Note: Temperature of the extracts may be monitored by the use of a beaker containing a thermometer and similar reagents as the samples.]

3.3.2 Volumetric Glassware. 50-100 mL capacity (Class A borosilicate).

3.3.3 Bottles, Linear Polyethylene or Polypropylene with Leakproof Caps, for Storing Samples. Teflon® bottles for storing multielement standards (500 mL, 125 mL, and 30 mL).

3.3.4 Centrifuge Tubes. Polypropylene or Oak Ridge polysulfone tubes with screw caps of polypropylene, 30 mL (Nalgene 3119-0050/3115-0030 or equivalent).

3.3.5 Nylon or Teflon® 0.45 μg Syringe Filters. Acrodisc® No. 4438 or equivalent and syringes for rapid nonmetals contributing filtering.

3.3.6 Sterile Polypropylene Tubes with Screw Caps of Polypropylene, 15 mL capacity. Falcon Model No. 2099 or equivalent.

3.3.7 Pipette. Automatic dispensing with an accuracy of setting 0.1 mL or better and repeatability of 20 μL. (Grumman Automatic Dispensing Pipette, Model ADP-30DT or equivalent).

3.3.8 Particle Mask. 3M, No. 8500. To be worn while cutting and handling glass-fiber filters.

3.3.9 Vortex Mixer. VWR2 variable speed or equivalent.

3.3.10 Hydrochloric Acid. Baker Instra-Analyzed, concentrated (36.5%-38%/12.3 M) or equivalent, for preparing samples.

3.3.11 Nitric Acid. Baker Instra-Analyzed, concentrated (70% 16M) or equivalent, for preparing samples.

3.3.12 ASTM Type II Water. ASTM D193.

4. Filter Medium Selection

4.1 Introduction

4.1.1 In general, the filter medium depends on the purpose of the test. For any given standard test method, the appropriate medium will be specified. However, it is important to be aware of certain filter characteristics that can affect selection and use.

4.1.2 Selecting a filtration substrate for time-integrated SPM monitoring must be made with some knowledge of the expected characteristics and a pre-determined analytical protocol. For any given standard test method, the appropriate medium will normally be specified.

4.1.3 In high-volume sampling, four types of filter material to capture SPM are commonly used. They include cellulose fiber, quartz/glass fiber, mixed fiber, and membrane filter types. Selecting a filter depends upon variables such as background metal content, artifact formation, and affinity for moisture. The basic characteristics of the types of filter material used in high volume are outlined in Table 1 sampling. Useful filter properties are described in Table 2. Several characteristics are important in the selection of filter media. They are:

- **Particle Sampling Efficiency**. Filters should remove more than 99% of SPM drawn through them, regardless of particle size or flow rates.
- **Mechanical Stability**. Filters should be strong enough to minimize leaks during sampling and wear during handling.
- **Chemical Stability**. Filters should not chemically react with the trapped SPM.
- **Temperature Stability**. Filters should retain their porosity and structure during sampling.
- **Blank Correction**. Filters should not contain high concentrations of target compound analytes.

Quartz fiber filter medium is most widely used for determining mass loading. Weight stability with respect to moisture is an attractive feature. Quartz fiber filters provide high efficiency and collect airborne particles of practically every size and description. Typical characteristics of quartz fiber filters are (1) a fiber content of high purity quartz, (2) a binder of below 5% (zero for binderless types), (3) a thickness of approximately 0.5 mm, (4) a surface with no pinholes, and (5) an allowance of no more than 0.05% of smoke particles to pass through the filter at a pressure of 100mm of water with a flow rate of 8.53 m/min (28 ft/min), as determined by ASTM-D2986, *Method for Evaluation of Air Assay Media by the Monodisperse DOP (Dioctyl Phthalate) Smoke Test.*

Particulate matter collected on quartz fiber filters can be analyzed for many constituents. If chemical analysis is anticipated, binderless filters should be used. Glass is a commercial product generally containing test-contaminating materials; therefore, appropriate background corrections should be made. Background concentration of various metals associated with different grades of quartz fiber filters are documented in Table 3.

4.1.4 Silica fiber filters are used when it may be required or desirable to use a mineral fiber filter, which may later be extracted by strong reagents. These fibers are usually made by leaching glass fibers with strong mineral acids followed by washing with deionized water. The fibers are rather weak but can be formed into filter sheets using little or no binder. These filters have been recently developed and are commercially available.

4.1.5 For some purposes, airborne particles may be collected on cellulose fiber filters. Cellulose low-ash filters are especially useful when the filter is to be destroyed by ignition or chemical digestion.

However, these filters have higher flow resistance (lower sampling rate) and have been reported to have much poorer collection efficiency than the glass fiber media. Furthermore, cellulose is very sensitive to moisture conditions, and even with very careful conditioning before and after sampling, accurately weighing the collected particles is difficult. The filter should be enclosed in a lightweight metal can with a tight lid and weighed.

4.1.6 As documented in the 40 CFR Part 58, Appendices A and B, identify the filter specifications when used as part of the *Federal Reference Method for Particulate Matter in Ambient Air*. These specifications include (1) a quartz-fiber, nonhydroscopic filter, (2) a size of approximately 8" x 10", (3) an exposure area of approximately 63 in.^{2}, (4) a 99% collection efficiency as measured by ASTM-2986 (DOP test) for particles 0.3 μm diameter, (5) a pressure drop range of 42-54 mm Hg at a flow rate of 1.5 m^3/min through the nominal exposed area, (6) a pH of 6 to 10, and (7) a maximum weight integrity of 2.4 mg.

4.2 Visual Filter Inspection

4.2.1 After purchased, all filters must be visually inspected for defects, and defective filters must be rejected if any are found. Batches of filters containing numerous defects should be returned to the supplier.

4.2.2 The following are specific defects to look for:

4.2.2.1 Pinhole. A small hole appearing as a distinct and obvious bright point of light when examined over a light table or screen, or as a dark spot when viewed over a black surface.

4.2.2.2 Loose material. Any extra loose material or dirt particles on the filter that must be brushed off before the filter is weighed.

4.2.2.3 Discoloration. Any obvious visible discoloration that might be evidence of a contaminant.

4.2.2.4 Filter nonuniformity. Any obvious visible nonuniformity in the appearance of the filter when viewed over a light table or black surface that might indicate gradations in porosity across the face of the filter.

4.2.2.5 Other. A filter with any imperfection not described above, such as irregular surfaces or other results of poor workmanship.

4.2.3 Visually inspect each filter in front of an area light and observe for any specific defects listed above.

4.2.4 Use a renumbering stamp to code the filter on its noncollection side with a 7-digit code before tare weighing. The noncollection side of the filter is designated by the manufacturer printed number and by a mesh texture. The number code might be as follows:

Example: Filter Number Code = ***9622001***

First 2 digits = yr, such as ***96*** for 1996
Third digit = project, such as ***2***
Fourth digit = filter type, such as ***2*** for 8" x 10" quartz fiber, Whatman QMA type
Last 3 digits = filter number, such as ***001***

5. Gravimetric Determination

5.1 Introduction

5.1.1 The filter is weighed (after moisture equilibration) before and after use to determine the net weight (mass) gain. The total volume of air sampled corrected to EPA standard conditions (25°C, 760 mm Hg) is determined from the measured flow rate and the sampling time. The concentration of TSP matter in the ambient air is computed as the mass of collected particles divided by the volume of air sampled (corrected to standard conditions) and expressed in μg/std m^3 (see Inorganic Compendium Method IO-2.4). For samples collected at temperatures and pressures significantly different than standard conditions, the corrected concentrations may differ substantially from actual concentrations $\mu g/m^3$, particularly at high elevations. The actual particulate matter concentration can be calculated from the corrected concentration using the actual temperature and pressure during the sampling period.

5.1.2 Verify that the weighing room conditions are within the limits. Filter equilibrium and weighing should be performed under controlled atmospheric conditions--a temperature of 25 ± 10°C and a relative humidity <50% (normally 50 ± 5% humidity).

5.1.3 Use the results from the motorized psychrometer to verify the temperature and relative humidity indicated by the hygrothermograph. Record the psychrometer values on the strip chart, along with the date, time, and your initials.

[Note: For traceability purposes, document your initials and full name in the front of the weighing room notebook.]

5.1.4 Record the room equilibration data on the Weighing Room Atmospheric Condition Form (see Table 4).

5.2 High Volume Filter Weighing Procedure

5.2.1 Filter Handling Procedure.

5.2.1.1 Filters should only be handled with finger cots or vinyl (nonpowdered) gloves. This procedure applies to filter handling in the field as well as in the weigh room.

5.2.1.2 Avoid using metal tweezers since the filters later will be used for metals analysis. When handling filter with gloved fingers or with any type of tweezers, avoid touching the sampled area.

5.2.2 Initial Weighing of High Volume Filter.

5.2.2.1 Upon receipt of new high volume filters (8" x 10" quartz fiber), take them to the climate controlled room, remove the paper and plastic envelope (wearing clean plastic gloves), place each on edge in a clean metal file rack, and cover with clean white paper towels.

5.2.2.2 Allow the filters to equilibrate in the metal file rack in the weighing room atmosphere for at least 24 h. Humidity and temperature must be within Federal Reference method specification, (i.e., <50% and 15-35°C, respectively).

5.2.2.3 Zero the high volume balance before weighing.

5.2.2.4 Manually calibrate the balance. However, checks against NIST traceable weights (Class S) should be conducted before the daily weighing. If the difference between the traceable weights is more than 0.5 mg, do not use the balance until it has been repaired.

5.2.2.5 Record the results on the Weighing Balance Check Form (see Table 5).

5.2.2.6 Check the balance at least once during every 4 h of weighing. If the difference limit is exceeded, stop, place the balance on a repair list, and reweigh any filters processed from the last acceptable check on a balance that is within the limits.

5.2.2.7 Weigh each filter and record filter numbers and tare weights on the Filter Weighing Form (see Table 6).

5.2.2.8 Return the weighed filters to the plastic and paper envelopes.

5.2.2.9 Weigh filters in lots of approximately 100, if possible. After every fifth weighing, recheck the zero of the balance. The balance response should be ± 1 mg from 0. All differences should be corrected. Any difference exceeding 1 mg requires reweighing the previous five filters. Any filter weight outside the normal range of 3.5-5.0 g requires immediate investigation.

5.2.2.10 A second analyst should reweigh 100%. If the difference between the weights are less than 1.0 mg, the results are acceptable.

5.2.2.11 If the difference is greater than this limit, wait another 24 h and reweigh them.

5.2.2.12 If the results are still outside acceptable limits, wait another 24 h and reweigh them again. Then report the last reweigh values as the pre-field tare weights.

5.2.3 Final Weighing of High Volume Filter.

5.2.3.1 Exposed filters should be logged into the laboratory computer and received in individual manila folders, with computer printed identification labels affixed. No exposed filter should be touched until this label is affixed.

5.2.3.2 Condition all filters in the manner specified by the Federal Reference Method, as documented in Sections 5.1.2 and 5.2.2.

5.2.3.3 Weigh all filters according to the Tare Weighing Procedure in Section 5.2.2. Record final weights on the Filter Weighing Form (see Table 6).

5.2.3.4 For filters not to be analyzed, put an asterisk in the space preceding the four-letter code. Leave this space blank for samples to be analyzed. Sign and date the forms.

5.2.3.5 Archive asterisked high volume filters.

5.2.3.6 Have a second analyst reweigh 10% of the filter and verify that the weights have not changed.

- If the difference between the weights are less than 2.0 mg, the results are acceptable. Use the results from the first weighing.
- If the difference is greater than this limit, reweigh 100% of that lot and use the last reweigh weight. Calculate and report the particulate matter concentrations as:

$$SPM = \frac{(W_f - W_i) \times 10^6}{V_{std}}$$

where:

SPM = mass concentration of suspended particulate matter (TSP or PM_{10}), μg/std m^3.
W_i = initial weight of clean filter, g.
W_f = final weight of exposed filter, g.
V_{std} = air volume sampled, converted to standard conditions (25°C and 760 mm Hg), std m^3.
10^6 = conversion of g to μg.

5.3 Dichotomous Filter Weighing Procedure

5.3.1 Initial Weighing of Dichotomous Filters.

5.3.1.1 Fabric filters, 37-mm in diameter, with a circumferential plastic reinforcing ring are usually supplied in small boxes. Open the boxes in the climate-controlled room under conditions suitable for high volume weighing. Cover with a clean label paper towel and allow to equilibrate for 24 h.

5.3.1.2 Weigh filters on a Mettler microbalance; each balance is identified by a balance number.

5.3.1.3 Assign each balance a block of 7-digit sample numbers to be used sequentially. Assign a sample number to each filter when it is tared.

[Note: Inaccuracies in this aspect of the procedure will cause irremedial sample loss.]

5.3.1.4 Turn on the balance and allow it to warmup for at least 15 min. If the balance is used daily, leave it on at all times.

5.3.1.5 Set the range knob to 10 mg with the automatic tare turned off. Turn the release lever to "1" and zero the balance using the tare adjusting knob.

5.3.1.6 To calibrate, turn the 10 mg tare knob to "C" and adjust the fine and coarse calibrating screws for a reading of 10.000 $\pm$ 0.002. Return the release level to "0" and the 10 mg tare knob to "0."

5.3.1.7 Using clean nonserrated tweezers that will not damage the filter, remove the filter from the Lexan jig and place it on the weighing pan. Turn the release lever to "1" and dial in tare weights until a reading between 0.000 and 7.000 is obtained. Allow the reading to stabilize (which may require 2 to 4 min). Record the reading and the dialed-in tare weight. Return the release lever to "0" and remove the filter from the weighing pan.

[Note: Do not use metal tweezers.]

5.3.1.8 Place a white label on a clean 50-mm diameter plastic petri dish (tight fitting lit type).

5.3.1.9 Assign a sample number to each filter (from those assigned to that balance), taking extreme care to avoid duplication or missed numbers.

5.3.1.10 Record the assigned sample number on the petri dish label, leaving sufficient room for one more letter to be written following the number. Do not record the balance number on this label.

5.3.1.11 Record the balance number, the assigned sample number, the dialed-in tare weight, and the digital-displayed tare weight on the sample form. Number each sheet of the form sequentially in the upper right-hand corner. Write "Tare Weight, Dichot Filters" on the top of each sheet. When bound, these forms may serve as the laboratory notebook.

5.3.1.12 Place the weighed filter in its numbered petri dish for future use.

5.3.2 Final Weighing of Dichotomous Filter.

5.3.2.1 Filters should be returned from the field with a computer printed label affixed to the petri dish. The label should contain a five-character identification code that is different from the original sample number, a balance ID, the balance tare, and other information. All filters should be accompanied by extra labels. Some will have the words "To Be Analyzed" on the labels. The filter in each petri dish should rest in a Lexan jig.

5.3.2.2 Each filter on the balance on which its tare weight was obtained. In the climate-controlled room, group the filters according to recorded balance numbers. Open the petri dishes, making certain that lids are placed under the bottoms and that no mixup occurs. Cover with a clean white label paper towel and allow to equilibrate.

5.3.2.3 Repeat Section 5.3.1.7 of the dichotomous filter tare weighing procedure.

5.3.2.4 Perform "Standard Filter" quality control check to assure validity of reweighing.

5.3.2.5 Using clean, nonserrated tweezers that will not damage the filter, remove the filter from the Lexan jig and place it on the weighing pan. Dial in the tare weight recorded on the information label and turn the release lever to"1."

5.3.2.6 If the dichotomous filter is not to be analyzed, use the tweezers to place it in a small glassine envelope to which one of the extra labels has been affixed. Place an asterisk before the five-character code on the form. Deliver these filters to the filter bank for archiving.

5.3.2.7 If the filter is to be analyzed, use tweezers to carefully put it back into the petri dish. Place the petri dish **carefully** in a box.

5.3.2.8 Place a label on a sheet of 8 1/2" x 11" paper for either NAA or XRF analysis. Indicate the page number and balance number on each list. Keep the samples in the box in an order corresponding with the lists.

5.3.2.9 Without jostling the box, deliver it, the two lists, and the original Field Test Data Sheets with two copies of each to the sample custodian who will initial the original forms and return them upon receipt.

5.3.2.10 Calculate and report the particulate matter concentration for both fine and coarse samples utilizing the following equation:

$$PM = \frac{(W_f - W_i) \times 10^6}{V_{std}}$$

where:

PM = mass concentration of particulate matter (TSP, fine or coarse friction), μg/std m^3.

W_i = initial weight of clean filter, g.

W_f = final weight of exposed filter, g.

V_{std} = air volume sampled, converted to standard conditions, std m^3 (see Inorganic Compendium Method IO-2.4).

10^6 = conversion of g to μg.

5.4 Transport of Filters

5.4.1 After collecting samples, transport the filters to the laboratory, taking care to minimize contamination and loss of the sample. Glass fiber filters should be transported or shipped in a shipping envelope. Cover the exposed surface of the membrane filters with an unexposed filter and seal the filter in plastic filter holders.

5.4.2 Assign numbers to the filters and log them into the data record form, ensuring that any necessary sampling information is included (Untreated filter samples may be stored indefinitely.)

5.4.3 Provide one blank sample with every 10 actual samples. No air is drawn through the blank filter, but it is subjected to the same handling and shipping manipulations as the actual samples.

6. Extraction of Glass Fiber Filters in Preparation for Metal Analysis

6.1 Introduction

This section describes a microwave-extraction procedure to extract inorganics from the particulate quartz glass-fiber filter. Following microwave extraction, target analytes are analyzed by ICP, ICP/MS, AA, or GFAA.

6.1.1 Ambient air quartz fiber filters should be received folded in half lengthwise with the particulate material inward and enclosed in protective envelopes. Store these protective envelopes approximately 15°-30°C until analysis.

6.1.2 The maximum sample holding times is usually 180 days. Analyze the samples within 180 days, even if these times are less than the maximum data submission times allowed.

6.2 Microwave Extraction Procedure

6.2.1 Filter Cutting Procedure.

6.2.1.1 Cut a 1" x 8" strip from the 8" x 10" filter using a template (see Figure 1) and cutting tool (see Figure 2) as described in the Federal Reference Method for lead. Use a laboratory microwave extraction system to extract the metals with either a hydrochloric/nitric acid solutions (for ICP and FAA) on a nitric acid solution (for ICP/MS and GPAA). After cooling, mix the digestate and use Acrodisc® syringe filters to remove any insoluble material. Microwave extraction is used to prepare samples for ICP, ICP/MS, AA, or GFAA.

6.2.1.2 Prior to use, acid wash the plexiglass filter template, the polysulfone centrifuge tubes and caps, and all other laboratory equipment that will come into contact with the filter samples to prevent contamination.

6.2.1.3 Using vinyl gloves, place the acid-cleaned filter template and cover inside a balance hood for cutting quartz fiber filters.

6.2.1.4 Wipe plexiglass template base, cover, and cutting blade with a clean, dry Kinwipe to prevent sample cross-contamination.

6.2.1.5 Unfold the 8" x 10" quartz filter to be sectioned and carefully place sampled side up (numbered side down) within the plexiglass template filter margins.

6.2.1.6 Carefully (without disturbing sampled area of filter) place the grooved cover, notch side down, within the margins of the base template. Use a clear cutting blade to cut a 1" x 8" strip.

6.2.1.7 Using gloved fingers, accordion-fold or tightly roll the filter strip and transfer on edge to an acid cleaned polysulfonte tube, labeled with wax pencil. DO NOT use barcodes or tape in microwave.

6.2.1.8 Clean filter template between samples with dry Kinwipes. (Change gloves between samples to prevent cross-contamination.)

6.2.1.9 Duplicate sample frequency is normally 1 per 20 field samples (see Table 7). Prepare a sample filter duplicate by moving the template cover to a second portion of the field collected filter. Cut an additional filter strip by moving the template cover to a second section of the filter and repeat Sections 6.2.1.6 through 6.2.1.8 above using a separate polysulfone tube.

6.2.1.10 Select a field collected filter for matrix spiking. In addition to the filter strip cut for determining metals, section a second portion of the filter, and fortify (spike) with target metals.

6.2.1.11 Prepare matrix spike samples at a frequency of 1 per 20 field samples or a minimum of 1 per extraction day (see Table 7). Move the template to a second section of the filter and repeat Sections 6.2.1.6 - 6.2.1.8, using a separate polysulfone tube and spike as shown in Table 7.

6.2.2 Microwave Calibration Procedure. Calibration of the microwave unit is a critical step prior to its use. In order that absolute power settings may be interchanged from one microwave unit to another, the actual delivered power must be determined, which allows the analyst to relate power in Watts to the partial power setting of the unit (% Power).

Calibration of a laboratory microwave unit (see Figure 3) depends on the type of electronic system used by the manufacturer. If the unit has a precise and accurate linear relationship between the output power and the scale used in controlling the microwave unit, the calibration can be a three-point calibration in the range of 50% to 100% power. If the unit does not prove linear ($\pm$10 W) using the three-point technique, a multiple-point calibration is necessary. A bracketed calibration range of the digesting power to be used is recommended for determining the calibration points. If the unit power calibration needs multiple-point calibration, the point where the linearity begins must be identified. For example, a calibration at 100, 99, 98, 97, 95, 90, 80, 70, 60, and 50% power settings can be applied and the data plotted. The nonlinear portion of the calibration curve can be excluded or restricted. Each percent is equivalent to approximately 5.5-6.5 W and becomes the smallest unit of power that can be controlled. If 20-40 W are contained from 99-100%, that portion of the microwave calibration is not controllable by 3-7 times that of the linear portion of the control scale and will prevent duplication of precise power conditions specified in that portion of the power scale.

6.2.3 Microwave Power Evaluation. The equation in the following section evaluates the power available for heating in a microwave cavity. The variables are determined by measuring the temperature rise in 1 kilogram of water exposed to electromagnetic radiation for a fixed period of time. The following procedure is used for evaluating each calibration point, represented as % power output for each microwave.

6.2.3.1 Measure and record a 1 kilogram (1,000 g $\pm$0.1 g) sample of room temperature (23°$\pm$2°C) distilled water in a thick-walled microwave transparent (Teflon®) beaker for each calibration point.

6.2.3.2 Measure and record the initial temperature of the water, (T_i), to within 0.1°C. The starting temperature should be between 22 and 26°C.

6.2.3.3 Place the Teflon® beaker in microwave and irradiate at full power (100% point) for 2 min (120 s). Each calibration point (i.e., 100%, 50% or multi-points) requires a separate clean beaker containing water at room temperature.

6.2.3.4 Remove beaker from the microwave and measure and record the maximum final temperature (T_f) to 0.1°C, within 30 s of the end of irradiation. This process should be done while stirring continuously (an electronic stirrer using a large stir bar works best).

Calculate the microwave power according to the following formula:

$$\text{Power} = \frac{K \times C_p \times M \times \Delta T}{t}$$

$$\frac{K \times C_p \times M}{t} = 34.87$$

$$\text{Power} = 34.87 \times \Delta T$$

where:

Power = The apparent power absorbed by the sample, watts (W = joule-s^{-2}).
K = The conversion factor for thermochemical calories-s^{-1} to W = 4.184.
C_p = The heat capacity, thermal capacity, or specific heat (cal-g^{-1}-°C^{-1} = 1.0 for water).
M = The mass of the sample, grams.
$\Delta T = T_f - T_i$, °C.
t = Time, s.

6.2.3.5 Derive an equation for the linear portion of the calibration range and determine the equivalent value in watts of the arbitrary setting scale. Use the actual power in watts to determine the appropriate setting of the particular microwave unit being used. Each microwave unit will have its own (% power) setting that corresponds to the actual power (in wattage) delivered to the samples.

6.2.3.6 An initial multipoint power evaluation should be performed for each microwave unit. If linear, the calibration should be checked on a regular basis, using the 3-point calibration verification routine. A single point verification may be appropriate when utilizing a single power output for digestion. If any part of the power source to the microwave has been serviced or altered, the entire calibration must be reevaluated.

6.2.4 Cleaning Procedure for PFA Vessels. All digestion vessels must be acid cleaned and rinsed with reagent water prior to use to prevent contamination.

6.2.4.1 Wash each PFA vessel with deionized detergent and rinse with reagent water.

6.2.4.2 Add 10 mL concentrated HNO_3 to each of 12 vessels, cap, and place in microwave.

6.2.4.3 Heat vessels at 100% power in microwave for 10 min as recommended by CEM (microwave manufacturer). Rinse the vessels with copious amounts of deionized, distilled water prior to use for any analyses under this contract. If only 6 vessels are to be cleaned, 70% power may be utilized, which corresponds to approximately 5% per vessel.

6.2.5 Digestion Procedure for Microwave Extraction For Ambient Filter Samples.

6.2.5.1 Prepare extracting acid (2.06 M HCl, 0.89 M HNO_3). In a 1-L volumetric flask, combine in order and mix 500 mL of deionized, distilled water, 55.5 mL of concentrated (70%/16 M) redistilled spectrographic-grade nitric acid, and 167.5 mL of ACS reagent-grade concentrated hydrochloric acid (12.3 M). Cool and dilute to 1-L with deionized, distilled water.

[Note: Nitric and hydrochloric acid fumes are toxic. Prepare in a well-ventilated fume hood. Mixing results in an exothermic reaction. Stir slowly.]

6.2.5.2 Prepare nitric acid (3 M HNO_3) for use with GFAA analysis. In a 1-L volumetric flask, combine in order and mix 500 mL of deionized distilled water and 192 mL of concentrated nitric acid. Slowly dilute to 1 L.

6.2.5.3 Using vinyl gloves or plastic forceps, retrieve the filter strip from Section 6.2.1 and place on its edge in a labeled centrifuge tube. Using the plastic forceps, crush the filter strip down into the lower portion of the centrifuge tube to ensure acid volume will cover entire filter.

[Note: A breathing mask and vinyl gloves are required for safety of personnel handling dry glass-fiber filters. The breathing mask prevents the inhalation of minute glass shards and particulate material. The gloves protect the skin from the same materials and also prevent contamination of the sample by skin secretions. A recommended alternate to the use of a breathing mask would be performing cutting and transfer operations involving sample filters in a laminar flow hood, if available.]

[Note: More than one strip from a filter should be extracted to ensure adequate sample volume for sample and QC sample analysis. Blank filter samples should be extracted and analyzed, and digestion blanks should be run to ensure low levels of metals in the reagents used.]

6.2.5.4 Using a preset calibrated automatic dispensing pipette or Class A glass pipette, add 10.0 mL of extracting acid for ICP and ICP/MS analysis or 10 mL of 3 M nitric acid for AA/GFAA analysis. The acid should cover the strip completely. The sequence of adding the filter strip and acid to the centrifuge tube may be reversed, if more convenient, without affecting the results. Place the centrifuge tube in a Teflon® PFA vessel containing 31 mL of deionized water. Continue this process for a total of 12 samples to maximize microwave capacity.

6.2.5.5 Place the PFA vessel caps with the pressure release valves on the vessels hand-tight and tighten using the capping station to a constant torque of 12 ft-lb. Weigh and record the capped vessel assembly to the nearest 0.01 g. Place the vessels in the microwave carousel. Connect each sample vessel to the overflow vessel using the Teflon® PFA connecting tubes (see Figure 3).

6.2.5.6 Place the carousel containing the 12 vessels onto the turntable of the microwave unit. Any vessels containing 10 mL of acid solution for analytical blank purposes are counted as sample vessels. Irradiate the sample vessels at 486 W (power output) for 23 min. (Based on the calibration of the microwave as previously described). If fewer than 12 samples are to be digested, adjust the microwave system by reducing the power so that equivalent digesting power is delivered to the smaller sample batch. Generally, each vessel represents approximately 5% power. Therefore, a reduction in W would be reduced by 30% if only 6 vessels are digested. This reduction is only approximate, and each microwave unit will produce a different level of power output.

6.2.5.7 At the end of the microwave program, allow the pressure to dissipate (venting may be utilized with caution), then remove the carousel containing the vessels and cool in tap water for 10 min. Using the capping station uncap the microwave vessels, remove the labeled centrifuge tubes containing samples and discard the water in the PFA vessels.

6.2.5.8 Using a calibrated automatic dispensing pipette or a Class A glass pipette, add 10 mL of deionized distilled water to each centrifuge tube. Cap the centrifuge tube tightly and vortex (mix) the contents thoroughly. Using a nylon or teflon syringe pull-up a volume of sample from the centrifuge tube, place Acrodisc filter on syringe and dispense into a prelabeled sterile 15 mL centrifuge tube. Continue until centrifuge tube contains 10 to 15 mL of filtered digestate.

6.2.5.9 The matrix is 0.45 M nitric acid and 1.03 M hydrochloric acid for ICP analysis. The filtered sample in the falcon tube is now ready for analysis. Store for subsequent analysis by one or more of the Inorganic Compendium methods.

6.3 Hot Acid Extraction Procedure

6.3.1 Introduction. A hot extraction procedure to solubilize metals from the glass-fiber filter for subsequent analysis by ICP, ICP/MS, AA, or GFAA is described in this method. Nitric acid or a acid extraction solution is used to extract the metals from the quartz filter on a hot-plate.

6.3.2 Summary of Method.

6.3.2.1 Use the hot-acid extraction procedure as an alternate when microwave technology is not available.

6.3.2.2 Cut a 1" x 8" strip from the 8" x 10" filter as described in Federal Reference Method for lead. The inorganics are extracted from the filter strip by a hydrochloric/nitric acid solution or nitric acid only (to allow for GFAA analysis) using a hot acid extraction procedure. After cooling, pour the digestate rinses to a volumetric flask and dilute to volume. Filter to remove any insoluble material.

6.3.3 Hot Acid Extraction Procedure.

6.3.3.1 Using vinyl gloves or plastic forceps, retrieve the strip from Section 6.2.1 and place it in a labeled 150 mL Griffin beaker. Place the filter strip down into the lower portion of the beaker to ensure acid volume will cover entire filter.

[Note: More than one strip from a filter should be extracted to ensure adequate sample volume for sample and QC sample analysis. Blank filter samples should be extracted and analyzed and digestion blanks should be run to ensure low levels of metals in the reagents used.]

6.3.3.2 Using a preset calibrated automatic dispensing pipette or Class A glass pipette, add 15.0 mL of extracting acid (see Section 6.2.5) for ICP or ICP/MS analysis or 15 mL of 3M nitric acid for AA/GFAA analysis.

[Note: The acid should cover the strip completely.]

6.3.3.3 Place beaker on the hot-plate, contained in a fume hood, and reflax gently while covered with a watch glass for 30 min. Do not allow sample to dry.

[Caution: Nitric acid fumes are toxic. Remove the beakers from the hot-plate and allow to cool.]

6.3.3.4 Rinse the beaker walls and wash with reagent water. Decant rinsings and extract into a Class A 100 mL volumetric flask. Add approximately 40 mL reagent water to the remaining filter material in the beaker and allow to stand for at least 30 min. Rinse sidewalls and filter and transfer the contents of the beaker quantitatively to the volumetric flask. This critical step must not be deleted; it allows the acid to diffuse from the filter into the rinse.

6.3.3.5 Fill volumetric to approximately 85 mL with reagent water, cap, and mix thoroughly. Allow to stand approximately 5 min, then dilute to 100 mL final volume with reagent water.

6.3.3.6 Using a nylon or Teflon® syringe, pull-up a volume of sample from the centrifuge tube, place disc filter on syringe, and dispense into a prelabeled sterile 15 mL centrifuge tube. Continue until centrifuge tube contains 10 to 15 mL of filtered digestate.

6.3.3.7 The matrix is 0.45 M nitric acid, 1.03 M hydrochloric acid for ICP or ICP/MS analysis, or 1.5 M nitric acid for AA/GFAA analysis and deionized, distilled water. The filtered sample contained in the falcon tube is now ready for analysis by one or more of the Inorganic Compendium methods.

TABLE 1. CHARACTERISTICS OF FILTER MEDIUM

Cellulose Fiber (Cellulose Pulp)
• Low ash • Maximum temperature of 150°C • High affinity for water • Enhances artifact formation for $SP_4^{=}$ and NO^-_3 • Good for x-ray/neutron activation analysis • Low metal content
Quartz Fiber (Quartz spun with/without organic binder)
• Maximum temperature up to 540°C • High collection efficiency • Non-hydroscopic • Good for corrosive atmospheres • Very fragile however • Difficult to ash; good with extraction
Synthetic Fiber (Teflon® and Nylon®)
• Collection efficiency >99% for 0.01 μ particles • Low artifact formation • Low impurities • Excellent for X-ray analysis • Excellent for determining total mass due to non-hydroscopic nature • Nylon fiber good for HNO_3 collection
Membrane Fiber (Dry gel of cellulose esters)
• Fragile; requires support pad during sampling • High pressure drop • Low residue when ashed

TABLE 2. SUMMARY OF USEFUL PHYSICAL PROPERTIES OF VARIOUS FILTER MEDIUMS

Filter and Filter Composition	Density, mg/cm^2	pH	Filter Efficiency %
Teflon® (Membrane) $(CF_2)_n$(2 μm Pore Size)	0.5	Neutral	99.95
Cellulose (Whatman 41) $(C_6H_{10}O_5)_n$	8.7	Neutral (Reacts with HNO_3)	58% at 0.3 μm
Glass Fiber (Whatman GF/C)	5.16	Basic pH - 9	99.0
"Quartz" Gelman Microquartz	6.51	pH - 7	98.5
Polycarbonate (Nuclepore) $C_{15}H_{14} + CO_3$ (0.3 μm Pore Size)	0.8	Neutral	93.9
Cellulose Acetate/Nitrate Millipore $(C_9H_{13}O_7)_n$ (1.21 μm Pore Size)	5.0	Neutral (Reacts with HNO_3)	99.6

TABLE 3. TYPICAL BACKGROUND METAL CONCENTRATION (ppm) OF VARIOUS GRADES OF GLASS FIBER FILTERS

Metal	1	41	42	542	Filter 17ch	Grades GF/A	EPM 2K	934QH	QMA	QMB
Al	1	2	2	1	--	4,300	170	2,950	4	--
Ag	--	--	--	--	--	<1	<1	--	<1	--
As	<0.02	<0.02	<0.02	<0.02	--	<6	<6	--	<6	--
B	1	<2	2	2	--	6,100	42	--	42	--
Ba	<1	<1	<1	<1		8,500	50	<1	10	--
Be	--	--	--	--	--	0.2	<1	0.1	<1	<1
Bi	--	--	--	--	--	0.3	<4	0.8	<4	7
Ca	185	13	13	9	29	2,500	540	7,000	85	--
Cd	--	--	--	--	--	1	<1	0.8	0.2	<1
Co	--	--	--	--	--	11	<1	5.5	1.1	<1
Cr	0.3	0.3	0.3	0.7	--	0.2	4.5	3.0	1.6	0.7
Cu	1.2	0.1	0.4	0.2	0.6	56.0	1	7	3.4	3.4
Fe	5.0	6.0	6.0	3.0	5.0	100	15	265	23	29
Mg	<0.005	--	<0.005	<0.005	--	--	--	--	--	--
K	4.0	1.5	1.5	0.6	7	775	573	125	--	--
Mg	7	1.8	1.8	1.0	6	1,090	238	2,800	--	--
Mn	0.1	<0.05	<0.05	<0.05	--	8.0	<1	2	0.5	<1
Mo	--	--	--	--	--	2.0	<2	4	<2	<1
N	28	--	12	260	--	--	--	--	--	--
Na	160	40	37	8	30	1,830	1,020	1,100	280	--
Ni	--	--	--	--	--	6.0	--	2.5	3.4	2.2
Pb	0.4	0.2	0.2	0.1	1	10	2.5	2.0	2.3	8.3
S	17	<5	<5	<5	--	26	--	--	--	--
Sb	<0.02	<0.02	<0.02	<0.02	--	<4	<4	--	<4	--
Si	15	<2	<2	<2	--	--	--	--	--	--
Sn	--	--	--	--	--	0.1	--	3.8	--	<4
Ti	--	--	--	--	--	0.1	<1	<30	<1	<4
V	--	--	--	--	--	0.1	--	10	--	<4
V	--	--	--	--	--	0.1	--	10	--	<4
Sn	2.5	0.6	0.6	0.3	--	5,500	15	34	10	13

TABLE 4. WEIGHING ROOM ATMOSPHERIC CONDITION FORM

Equilibrium Period				Temperature Limits = 15°C to 35°C			Relative Humidity Limits = <50%			
Begin Date	Begin Time	End Date	End Time	Max-Min	Avg	Limits met?	Max-Min	Avg	Limits met?	Name

TABLE 5. WEIGHING BALANCE CHECK FORM

Date	Time	Balance Type	Balance ID	Class S Weights Serial No. or ID	mg			Limit = 0.5 mg Limits met?	Name
					Class S weight	Balance weight	Difference		

TABLE 6. FILTER WEIGHING FORM

Filter No.	Pre-field Initial Weighing		100% Second Weighing by Second Analyst (Limit = 1.0 mg)				Post-field Final Weighing		100% Second Weighing by Second Analyst (Limit = 2.0 mg)			
	Weight (mg)	Name-Date	Weight (mg)	Diff. (mg)	Limit met?	Name-Date	Weight (mg)	Name-Date	Weight (mg)	Diff. (mg)	Limit met?	Name-Date

TABLE 7. QUALITY CONTROL SAMPLES

Type	Frequency	Contains 1"x8" filter strip	Volume of Multimetal Stock Standard[a]
Method Blank	1 per 24 samples	No	Containing reagents only, to evaluate background contributions from reagents.
QMA Filter Lot Blank	1 per filter lot change	Yes	Analyzed prior to use of new filter lot.
Filter Duplicate	1 per 20 samples	Yes	This is a second 1"x8" filter strip cut from a single field sample.
Matrix Spike[b]	1 per 20s samples	Yes	0.2 mL
LC Blank[c]	1 per extraction day	No	Entire NIST traceable filter.
LCS[d]	1 per extraction day	No	Entire NIST traceable filter.

[a]These multimetal stock standards can be acquired from Spex Industries, Inc., or equivalent.
[b]The matrix spike (MS) is a 1"x8". strip cut from a field sample filter and spiked at a target level.
[c]The Lab Control (LC) Blank is a manufactured filter blank certified below NIST traceable detection limits.
[d]The Lab Control Sample (LCS) is a manufactured filter reference material certified at NIST traceable levels.

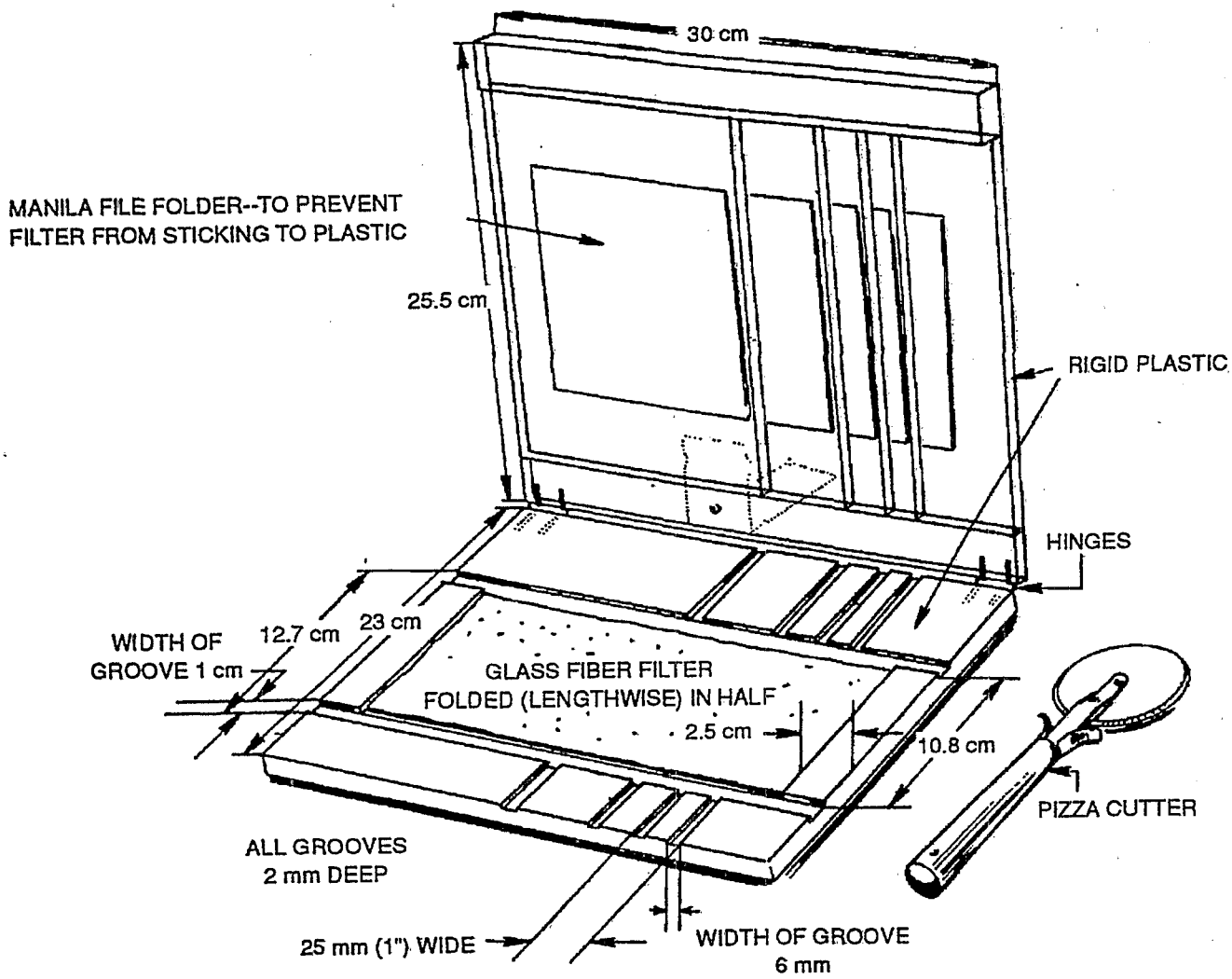

Figure 1. Templates for cutting filters.

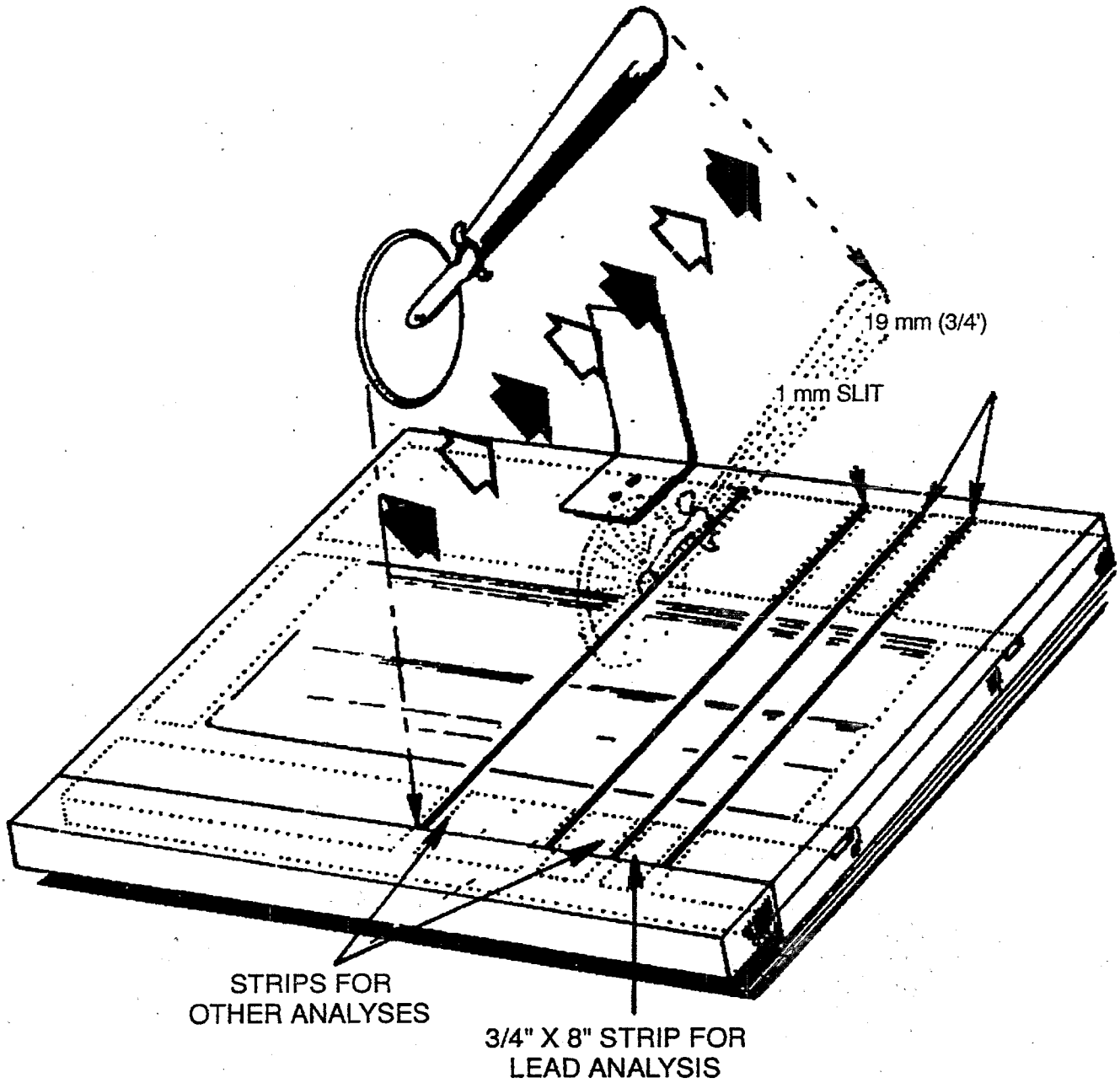

Figure 2. Diagram of filter cutting procedure.

MICROWAVE EXTRACTION

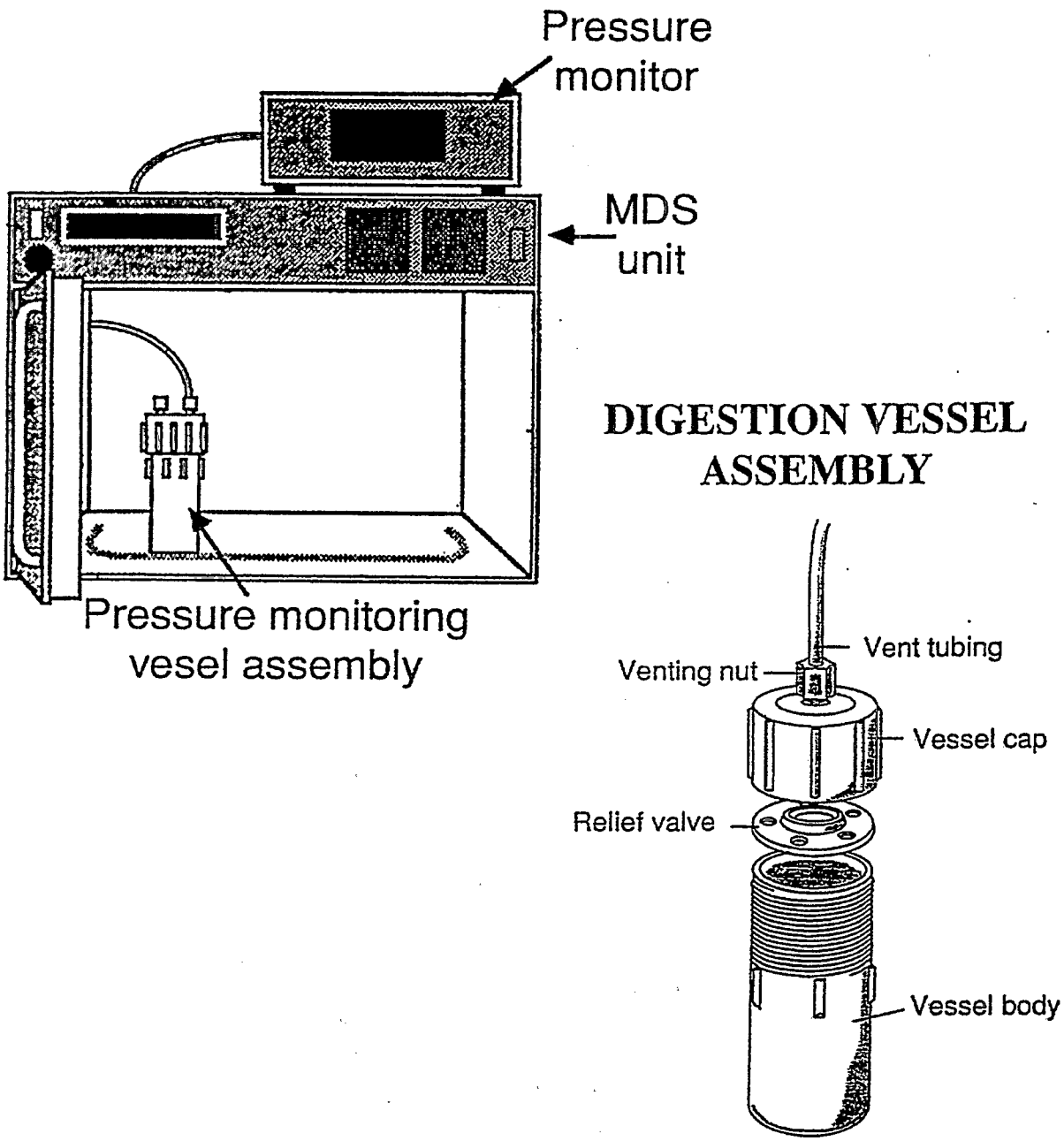

Figure 3. Microwave digestion system.

EPA/625/R-96/010a

Compendium of Methods for the Determination of Inorganic Compounds in Ambient Air

Compendium Method IO-3.2

DETERMINATION OF METALS IN AMBIENT PARTICULATE MATTER USING ATOMIC ABSORPTION (AA) SPECTROMETRY

Center for Environmental Research Information
Office of Research and Development
U.S. Environmental Protection Agency
Cincinnati, OH 45268

January 1997

Acknowledgements

This Method is a part of *Compendium of Methods for the Determination of Inorganic Compounds in Ambient Air* (EPA/625/R-96/060a), which was prepared under Contract No. 68-C3-0315, WA No. 2-10, by Midwest Research Institute (MRI), as a subcontractor to Eastern Research Group, Inc. (ERG), and under the sponsorship of the U.S. Environmental Protection Agency (EPA). Justice A. Manning, Center for Environmental Research Information (CERI), and Frank F. McElroy, National Exposure Research Laboratory (NERL), both in the EPA Office of Research and Development, were the project officers responsible for overseeing the preparation of this method. Other support was provided by the following members of the Compendia Workgroup:

- James L. Cheney, Corps of Engineers, Omaha, NB
- Michael F. Davis, U.S. EPA, Region 7, KC, KS
- Joseph B. Elkins Jr., U.S. EPA, OAQPS, RTP, NC
- Robert G. Lewis, U.S. EPA, NERL, RTP, NC
- Justice A. Manning, U.S. EPA, ORD, Cincinnati, OH
- William A. McClenny, U.S. EPA, NERL, RTP, NC
- Frank F. McElroy, U.S. EPA, NERL, RTP, NC
- William T. "Jerry" Winberry, Jr., MRI, Cary, NC

This Method is the result of the efforts of many individuals. Gratitude goes to each person involved in the preparation and review of this methodology.

Author(s)

- William T. "Jerry" Winberry, Jr., MRI, Cary, NC

Peer Reviewers

- David Brant, National Research Center for Coal and Energy, Morgantown, WV
- John Glass, SC Department of Health and Environmental Control, Columbia, SC
- Jim Cheney, U.S. Army Corps of Engineers, Omaha, NB
- Eric Prestbo, Frontier GeoScience, Seattle, WA
- Anne M. Falke, Frontier GeoScience, Seattle WA
- Gary Wester, Midwest Research Institute, Kansas City, MO
- Margaret Zimmerman, Texas Natural Resource Conservation Commission, Austin, TX
- Doug Duckworth, Martin Marietta Energy Systems, Inc., Oak Ridge, TN

DISCLAIMER

This Compendium has been subjected to the Agency's peer and administrative review, and it has been approved for publication as an EPA document. Mention of trade names or commercial products does

Method IO-3.2
Determination of Metals in Ambient
Particulate Matter Using Atomic Absorption (AA) Spectrometry

TABLE OF CONTENTS

	Page
1. Scope	3.2-1
2. Applicable Documents	3.2-2
2.1 ASTM Standards	3.2-2
2.2 Other Documents	3.2-2
3. Summary of Method	3.2-2
3.1 Collection of Sample	3.2-2
3.2 Sample Extraction	3.2-2
3.3 Sample Analysis	3.2-3
4. Significance	3.2-3
5. Definitions	3.2-3
6. Interferences	3.2-4
7. Apparatus	3.2-5
7.1 Glassware	3.2-5
7.2 Analysis Equipment	3.2-5
8. Reagents	3.2-6
8.1 Nitric Acid (HNO_3) Concentrated	3.2-6
8.2 Hydrochloric Acid (HCl) Concentrated	3.2-6
8.3 Water	3.2-6
8.4 Standard stock solutions (1,000 μg/mL)	3.2-6
8.5 Working Standards	3.2-7
8.6 Ionization and Chemical Interference Suppressants	3.2-8
9. Determination of Background Concentration of Metals in Filters	3.2-8
10. Analysis	3.2-8
10.1 Receiving of Sample From Extraction Laboratory	3.2-8
10.2 Flame Procedure	3.2-9
10.3 Furnace Procedure	3.2-10
10.4 Method of Standard Additions	3.2-11
10.5 Background Correction Methods	3.2-11
11. Spectrometer Calibration Curve	3.2-12
12. Calculations	3.2-13
12.1 Sample Air Volume	3.2-13
12.2 Metal Concentration	3.2-14
13. Maintenance	3.2-15
14. Quality Assurance (QA) and Performance Criteria	3.2-16
14.1 QA Program	3.2-16
14.2 Performance Criteria	3.2-17
15. Method Safety	3.2-18
16. References	3.2-19

Chapter IO-3
CHEMICAL SPECIES ANALYSIS OF FILTER COLLECTED SPM

Method IO-3.2
DETERMINATION OF METALS IN AMBIENT PARTICULATE MATTER USING ATOMIC ABSORPTION (AA) SPECTROMETRY

1. Scope

1.1 Suspended particulate matter (SPM) in air generally is a complex multi-phase system of all airborne solid and low vapor pressure liquid particles having aerodynamic particle sizes from below 0.01-100 μm and larger. Historically, SPM measurement has concentrated on total suspended particulates (TSP), with no preference to size selection.

1.2 Research on the health effects of TSP in ambient air has focused increasingly on particles that can be inhaled into the respiratory system, i.e., particles of aerodynamic diameter less than 10 μm. Researchers generally recognize that these particles may cause significant, adverse health effects. Recent studies involving particle transport and transformation strongly suggest that atmospheric particles commonly occur in two distinct modes: the fine (<2.5 μm) mode and the coarse (2.5 to 10.0 μm) mode. The fine or accumulation mode (also termed the respirable particulate matter) is attributed to growth of particles from the gas phase and subsequent agglomeration, while the coarse mode is made of mechanically abraded or ground particles. Because of their initially gaseous origin, particle sizes in this range include inorganic ions such as sulfate, nitrate, ammonia, combustion-form carbon, organic aerosols, metals, and other combustion products. Coarse particles, on the other hand, are produced mainly by mechanical forces such as crushing and abrasion. Coarse particles of soil or dust result primarily from entrainment by the motion of air or from other mechanical action within their area. Since the size of these particles is normally >2.5 μm, their retention time in the air parcel is shorter than the fine particle fraction.

1.3 Several methods are available for measuring SPM in ambient air. The most commonly used device is the high volume (hi-vol) sampler, which consists essentially of a blower and a filter, and which is usually operated in a standard shelter to collect a 24-h sample. The sample is weighed to determine concentration and is usually analyzed chemically. The hi-vol is considered a reliable instrument for measuring the weight of TSP in ambient air.

1.4 The procedures for determining toxic metals in particulate matter in ambient air is described in this method. The method is based on active sampling with a high-volume sampler. Analysis is done by atomic absorption spectrometry. This method describes both flame atomic absorption (FAA) spectroscopy and graphite furnace atomic absorption (GFAA) spectroscopy. Of the two methods, the detection limit for GFAA is about two orders of magnitude better than FAA.

1.5 The trace metal to be detected is dissociated from its chemical bonds by flame or in a furnace and is put into an unexcited or "ground" state. The metal is then capable of absorbing radiation at discrete lines of narrow bandwidth. A hollow cathode or electrode less discharge lamp for the determined metal provides a source of the characteristic radiation energy for that particular metal. The absorption of this characteristic energy by the atoms of interest in the flame or furnace is measured and is related to the concentration of the metal in the aspirated sample.

1.6 The sensitivity, detection limit, and optimum working range for each metal detected by this methodology are given in Table 1.

2. Applicable Documents

2.1 ASTM Standards

- D1356 *Definition of Terms Related to Atmospheric Sampling and Analysis.*
- D1357 *Planning the Sampling of the Ambient Atmosphere.*
- D4185-83 *Standard Test Methods for Metals in Workplace Atmosphere by Atomic Absorption Spectrophotometry.*

2.2 Other Documents

- Federal Regulations (1,2).
- Laboratory and Ambient Air Documents (3-14).

3. Summary of Method

3.1 Collection of Sample

3.1.1 Particulate matter from ambient air may be collected on glass fiber filters using a high-volume sampler. The high-volume sampler must be capable of sampling at an average flow rate of 1.70 m^3/min (60 ft^3/min). Constant air flow is maintained by a mass flow controller iver a 24-h period.

3.1.2 Air is drawn into a covered housing and through a filter by means of a high-flow rate blower at a flow rate [1.13 to 1.70 m^3/min. (40 to 60 ft^3/min)] that allows suspended particles having diameters < 100 μm (Stokes equivalent diameter) to pass to the filter surface. Particles 100-0.1 μm diameter are ordinarily collected on glass fiber filters. The mass concentration ($\mu g/m^3$) of suspended particulates in the ambient air is computed by measuring the mass of collected particulates and the volume of air sampled. After the mass is measured, the filter is ready for extraction to determine metal concentration.

3.2 Sample Extraction

3.2.1 Samples collected on glass fiber filters may be extracted by ultrasonication using a mixture of room temperature nitric acid (HNO_3) and hydrochloric acid (HCl). Strips are cut from the filters, HNO_3/HCl solution is added, and samples are ultrasonicated for 30 min.

3.2.2 Other extraction techniques use a hot nitric acid (HNO_3) procedure. Strips are cut from the filters and gently boiled in 3 M HNO_3 for 30 min. This procedure can be hazardous since nitric acid fumes are toxic. This procedure should be conducted in a well-ventilated fume hood.

3.2.3 The preferred method of extraction is by microwave extraction. In operation, a 1" x 8" strip is cut from the 8" x 10" filter as described in the Federal Reference Method for Lead. The metals are extracted from the filter strip by a hydrochloric/nitric acid solution or by a nitric acid solution only (to allow for GFAA analysis) using a laboratory microwave digestion system. After cooling, the digestate is mixed and filtered with Acrodisc syrine filters to remove any insoluble material. Microwave extraction

is used to prepare samples for inductively coupled plasma (ICP) spectroscopy or FAA analysis using the hydrochlorice/nitric acid solution and for GFAA using the nitric acid solution.

3.3 Sample Analysis

3.3.1 The trace element concentrations in each sample are determined by atomic absorption spectrometry. This technique operates by measuring energy changes in the atomic state of the analyte. As illustrated in Figure 1, the sample is vaporized and dissociates into its elements in the gaseous state. The element being measured is aspirated into a flame or injected into a graphite furnace and atomized. The atoms in the unionized or "ground" state absorb energy, become excited, and advance to a higher energy level.

3.3.2 A light beam containing the corresponding wavelength of the energy required to raise the atoms of the analyte from the ground state to the excited state is directed through the flame or furnace. This wavelength is observed by a monochromator and a detector that measures the amount of light absorbed by the element, hence the number of atoms in the ground state in the flame or furnace. A hollow cathode or electrode less discharge lamp for the element being determined provides a source of that metal's particular absorption wavelength.

3.3.3 The data output from the spectrometer can be recorded on a strip chart recorder or processed by computer. Determination of metal concentrations is performed from prepared calibration curves or read directly from the instrument.

4. Significance

4.1 The area of toxic air pollutants has been the subject of interest and concern for many years. Exposure to metal containing particulate can cause adverse health effects. For example, high levels of lead in the body can cause motor nerve paralysis, anaemia, and, in children, inhibition of the nervous system's development. High cadmium levels can cause cardiovascular problems and bone thinning. Effects of long-term exposure to subacute levels of toxic metals in air pollution is, as yet, not well known.

4.2 Atomic absorption spectrophotometry is capable of quantitatively determining most metals at levels that are required by federal, state, and local regulatory agencies. Sensitivity and detection limits may vary from instrument to instrument.

5. Definitions

[Note: Definitions used in this document are consistent with ASTM methods. All pertinent abbreviations and symbols are defined within this document at point of use.]

5.1 Analysis Spike Sample. An analytical sample taken through the analytical preparation method and then spiked prior to analysis.

5.2 Analyte. The element or icon an analysis seeks to determine; the element of interest.

5.3 Analytical Preparation. An analytical sample taken through the analytical preparation method. Also referred to as preparation or sample preparation.

5.4 Analytical Preparation Method. A method (digestion, dilution, extraction, fushion, etc.) used to dissolve or otherwise release the analyte(s) of interest from its matrix and provide a final solution containing the analyte which is suitable for instrumental or other analysis methods.

5.5 Analytical Sample. Any solution or media introduced into an instrument on which an analysis is performed excluding instrument calibration, initial calibration verificatin, initial calibration blank, continuing calibration verification and continuing calibration blank.

5.6 Calibration. The establishment of an analytical curve based on the absorbance, emission intensity, or other measured characteristic of known standards. Calibration procedures differ for the various methods included in this SOW. Refer to the method of interest for a definition specific to that method.

5.7 Calibration Standards. A series of known standard solutions used by the analyst for calibration of the instrument (i.e., preparation of the analytical curve). The solutions are not subject to the preparation method but contain the same matrix as the sample preparations to be analyzed.

5.8 Field Blank. Any sample submitted from the field identified as a blank.

5.9 Field Sample. A portion of material received to be analyzed that is contained in a single or multiple containers and identified by a unique EPA Sample Number.

5.10 Flame Atomic Absorption (AA). Atomic absorption which utilizes flame for excitation.

5.11 Graphite Furnace Atomic Absorption (GFAA). Atomic absorption which utilizes a graphite cell for excitation.

6. Interferences

6.1 In atomic absorption (AA) spectrometry, interferences, though less common than in other analytical methods, can occur. In flame atomic absorption analysis of some elements, the type and temperature of the flame used is critical; with improper conditions, chemical and ionization interferences can occur. In furnace atomic absorption analysis, the advantages of enhanced sensitivity may be offset by the fact that interference is also more of a problem. The categories of interference are discussed below.

6.1.1 Background or nonspecific absorption can occur from particles produced in the flame that can scatter light and produce an apparent absorption signal. Light scattering may be encountered when solutions of high salt content are being analyzed. They are most severe when measurements are made at shorter wavelengths (for example, below about 250 nm). Background absorption may also occur as the result of the formation of various molecular species that can absorb light. The background absorption can be accounted for by using background correction techniques as discussed in Section 11.5.

6.1.2 Spectral interferences are interferences that result when an atom different from the one being measured absorbs a portion of the radiation. Such interferences are extremely rare in AA. In some cases, multi-element hollow cathode lamps may cause a spectral interference by having closely adjacent

emission lines from two different elements. In general, the use of multi-element hollow cathode lamps is discouraged.

6.1.3 Ionization interference occurs when easily ionized atoms are being measured. The degree to which such atoms are ionized is dependent upon the atomic concentration and the presence of other easily ionized atoms. This interference can be controlled by the addition of a high concentration of another easily ionized element that will buffer the electron concentration in the flame. The addition of sodium or potassium to the standards and samples is frequently used as an ionization suppressant.

6.1.4 Chemical interferences occur in AA when species present in the sample cause variations in the degree to which atoms are formed in the flame, or when different valence states of a single element have different absorption characteristics. Such interferences may be controlled by adjusting the sample matrix or by the method of standard additions. For example, calcium phosphate does not dissociate completely in the flame. Lanthanum may be added to bind the phosphate and allow the calcium to be ionized.

6.1.5 Physical interferences may result if the physical properties of the samples vary significantly. Changes in viscosity and surface tension can affect the sample aspiration rate and, thus, cause erroneous results. Sample dilution, the method of standard additions, or both, are used to correct such interferences. High concentrations of silica in the sample can cause aspiration problems. If large amounts of silica are extracted from the samples, they should be allowed to stand for several hours and centrifuged or filtered to remove the silica. The matrix components of the sample should match those of the standards. Any reagent added during extraction should be added to the standards.

6.2 Matching the matrix of the samples to the matrix of the standards minimizes interference. The method of standard additions in Section 11.4 and the use of background correction techniques in Section 11.5 should identify and correct for interference.

6.3 The known interferences and correction methods for each metal are indicated in Table 2.

7. Apparatus

7.1 Glassware

[Note: All glassware should be Class A borosilicate glass and should be cleaned with laboratory detergent, rinsed, soaked for 4 h in a 20% (w/w) HNO_3, and rinsed several times with distilled water.]

7.1.1 Beakers. Borosilicate glass, including 30 mL, 125 mL, 150 mL Phillips or Griffin.

7.1.2 Volumetric flasks. 10 mL, 100 mL, 1 L.

7.1.3 Pipettes. Volumetric, including 1, 2, 4, 8, 15, 30, 50 mL.

7.1.4 Additional glassware. As required depending on dilution required to obtain concentrations above the detection limit, in the response range.

7.2 Analysis Equipment

7.2.1 Atomic Absorption Spectrometer. Eequipped with air/acetylene and nitrous oxide/acetylene burner heads or graphite furnace.

7.2.2 Hollow cathode or electrode less discharge lamp. For each element to be determined.

7.2.3 Acetylene gas and regulator. Cylinder of acetylene equipped with two gauge, two stage pressure reducing regulator with hose connections.

7.2.4 Nitrous oxide gas and regulator. Cylinder of nitrous oxide equipped with 2 two gauge, two-stage pressure reducing regulator with hose connections.

7.2.5 Heating tape and rheostat. May be required to heat second stage of nitrous oxide gas cylinder regulator and hose to prevent freeze-up of line.

7.2.6 Air supply. Clean, dry compressed air with a two-stage regulator.

7.2.7 Parafilm M sealing film. A pliable, self-sealing, moisture-proof, thermoplastic sheet material, substantially colorless is recommended for use in sealing the acidified sample beakers. Commercially available Parafilm M satisfies this requirement.

8. Reagents

8.1 Nitric Acid (HNO_3) Concentrated. ACS reagent grade HNO_3 and commercially available redistilled HNO_3 which have sufficiently low metal concentrations.

8.2 Hydrochloric Acid (HCl) Concentrated. ACS reagent grade.

8.3 Water. ASTM Type II (ASTM D193) or equivalent. The same source or batch of distilled, deionized water must be used for all purposes in the analysis.

8.4 Standard stock solutions (1,000 μg/mL)

[Note: For each metal that is to be determined, standards of known quality and concentration must either be made or acquired commercially. These solutions are stable for 1 yr when stored in polyethylene bottles, except as noted. Instructions for laboratory preparation are described below.]

[Note: Nitric acid fumes are toxic. Prepare in a well-ventilated fume hood]

8.4.1 Stock Aluminum Solution. Dissolve 1.00 g of aluminum wire in a minimum volume of 1 + 1 HCl. Dilute to volume in a l-L flask with distilled water.

8.4.2 Stock Barium Solution. Dissolve 1.779 g of barium chloride (BaCl2 2H2O) in water. Dilute to volume in a l-L flask with distilled water.

8.4.3 Stock Bismuth Solution. Dissolve 1.000 g of bismuth metal in a minimum volume of 6 N HNO_3. Dilute to volume in a l-L flask with 2% (v/v) HNO_3.

8.4.4 Stock Cadmium Solution. Dissolve 1.000 g of cadmium metal in a minimum volume of 6 N HCl. Dilute to volume in a l-L flask with 2% (v/v) HNO_3.

8.4.5 Stock Calcium Solution. To 2.497 g of primary standard calcium carbonate ($CaCO_3$), add 50 mL of distilled water. Add drop wise a minimum volume of HCl (approximately 10 mL) to dissolve the $CACO_3$. Dilute to volume in a l-L flask with distilled water.

8.4.6 Stock Chromium Solution. Dissolve 3.735 g of potassium chromate (K2CrO4) in distilled water. Dilute to volume in a l-L flask with distilled water.

8.4.7 Stock Cobalt Solution. Dissolve 1.000 g of cobalt metal in a minimum volume of 1 + 1 HCl. Dilute to volume in a l-L flask with 2% (v/v) HNO_3.

8.4.8 Stock Copper Solution. Dissolve 1.000 g of copper metal in a minimum volume of 6 N HNO_3. Dilute to volume in a l-L flask with 2% (v/v) HNO_3.

8.4.9 Stock Indium Solution. Dissolve 1.000 g of indium metal in a minimum volume of 1 + 1 HCl. Addition of a few drops of HNO_3 and mild heating will aid in dissolving the metal. Dilute to volume in a l-L flask with 2% (v/v) HNO_3.

8.4.10 Stock Iron Solution. Dissolve 1.000 g of iron wire in 50 mL of 6 N HNO_3. Dilute to volume in a l-L flask with 2% (v/v) HNO_3.

8.4.11 Stock Lead Solution. Dissolve 1.598 g of lead nitrate ($Pb(NO_3)2$) in 2% (v/v) HNO_3. Dilute to volume in a l-L flask with 2% (v/v) HNO_3.

8.4.12 Stock Lithium Solution. Dissolve 5.324 g of lithium carbonate ($LI2CO_3$) in a minimum volume of 6 N HCl. Dilute to volume in a l-L flask with distilled water.

8.4.13 Stock Magnesium Solution. Dissolve 1.000 g of magnesium ribbon in a minimum volume of 6 N HCl. Dilute to volume in a l-L flask with 2% (v/v) HNO_3.

8.4.14 Stock Manganese Solution. Dissolve 1.000 g of manganese metal in a minimum volume of 6 N HNO_3. Dilute to volume in a l-L flask with 2% (v/v) HNO_3.

8.4.15 Stock Nickel Solution. Dissolve 1.000 g of nickel metal in a minimum volume of 6 N HNO_3. Dilute to volume in a l-L flask with 2% (v/v) HNO_3.

8.4.16 Stock Potassium Solution. Dissolve 1.907 g of potassium chloride (KCl) in distilled water. Dilute to volume in a l-L flask with distilled water.

8.4.17 Stock Rubidium Solution. Dissolve 1.415 g of rubidium chloride (RBCl) in distilled water. Dilute to volume in a l-L flask with distilled water.

8.4.18 Stock Silver Solution. Dissolve 1.575 g of silver nitrate ($AgNO_3$) in 100 mL of distilled water. Dilute to volume in a l-L volumetric flask with 2% (v/v) HNO_3. The silver nitrate solution will deteriorate in light and must be stored in an amber bottle away from direct light. New stock silver solution shall be prepared every few months.

8.4.19 Stock Sodium Solution. Dissolve 2.542 g of sodium chloride (NaCl) in distilled water. Dilute to volume in a l-L flask with distilled water.

8.4.20 Stock Strontium Solution. Dissolve 2.415 g of strontium nitrate ($Sr(NO_3)2$) in distilled water. Dilute to volume in a l-L flask with distilled water.

8.4.21 Stock Thallium Solution. Dissolve 1.303 g of thallium nitrate ($TINO_3$) in a 10% (v/v) HNO_3. Dilute to volume in a l-L flask with 2% (v/v) HNO_3.

8.4.22 Stock Vanadium Solution. Dissolve 1.000 g of vanadium metal in a minimum volume of 6 N HNO_3. Dilute to volume in a l-L flask with 2% (v/v) HNO_3.

8.4.23 Stock Zinc Solution. Dissolve 1.000 g of zinc metal in a minimum volume of 6 N HNO_3. Dilute to volume in a l-L flask with 2% (v/v) HNO_3.

8.5 Working Standards

8.5.1 Working Standards. Working standards are prepared by appropriate single or multiple dilutions of the standard solutions listed in Section 8.4. Mixed standards should be prepared with any chemical incompatibilities in mind. For those metals in Table 2 that indicate chemical or ionization interferences, the final dilution shall contain 2% (v/v) of the 50-mg/mL cesium and lanthanum solutions.

8.5.2 Match Matrices. To match the standard and sample matrices, the final dilution should contain 10% (v/v) HNO_3 or whatever acid mixture is used to prepare the sample. When using those atomic

absorption spectrometers equipped with concentration read-out, follow the manufacturer's suggestions as to the spacing of the standard concentrations over the range of interest.

8.6 Ionization and Chemical Interference Suppressants

8.6.1 Cesium Solution (50 mg/mL). Dissolve 73.40 g of cesium nitrate ($CsNO_3$) in distilled water. When stored in a polyethylene bottle, this solution is stable for at least 1 yr.

8.6.2 Lanthanum Solution (50 mg/mL). Dissolve 156.32 g of lanthanum nitrate ($La(NO_3)_3 \bullet 6H_2O$) in a 2% (v/v) HNO_3. Dilute to volume in a 1-L flask with 2% (v/v) HNO_3. When stored in a polyethylene bottle, this solution is stable for at least 1 yr.

9. Determination of Background Concentration of Metals in Filters

9.1 Use glass fiber filters to collect particulate matter with the high volume sampler. High quality filters with reproductible properties must be used in sampling for metals in ambient air. Analyze 5% of the total number of filters for the presence of specific metals, prior to sample collection, to verify reproductibility and low background metal concentrations.

9.2 Cut one 1" x 8" strip from each filter. Extract and analyze all strips separately, according to the directions given as delineated in Inorganic Compendium Method IO-3.1.

9.3 Calculate the total metal in each filter as:

$$F_b = \mu g \text{ metal/mL} \times (40 \text{ mL/strip}) \times (9)$$

where:

F_b = Amount of metal per 27 square in. of filter, μg.
μg metal/mL = metal concentration determine from Section 11.2.
40 mL/strip = total sample volume from microwave extraction procedure.
9 = 464.52 cm^2/51.61 cm^2.

9.4 Calculate the mean, F_m, of the values and the relative standard deviation (standard deviation/mean x 100). If the relative standard deviation is high enough so that, in the analyst's opinion, subtraction of F_m may result in a significant error in the μg metal/m^3, the batch should be rejected.

9.5 For acceptable metal/batches, use the value of F_m to correct all metal/analyses of particulate matter collected using that batch of filters. If the analyses are below the Method Detection Limit (MDL) from Table 1, no correction is necessary.

10. Analysis

10.1 Receiving of Sample From Extraction Laboratory

10.1.1 The sample should be received by the atomic absorption spectroscopist in a 15-mL volumetric flask from the extraction procedure outlined in Inorganic Compendium Method IO-3.1.

10.1.2 If more than one metal is to be determined in the sample, dilution to a volume larger than 10 mL may be required. In such cases, maintain the acid, ionization buffer, and releasing agent concentrations by increasing proportionally the amount added. The amount of dilution permitted will depend upon the number and concentration of metals being determined.

10.1.3 The 10-mL solution may be analyzed directly for any elements of very low concentration in the sample. Aliquots of this solution may be then diluted to an appropriate volume for the other elements of interest present at higher concentrations. Approximately 2 mL of solution are required for each element being determined.

10.1.4 Filter blanks must be subject to the entire extraction and analytical procedure and processed as described.

10.1.5 Some relatively rare chemical forms of some of the elements listed in Table 2 may not be dissolved by the procedures stated in this method. If such chemical forms are suspected, results of their procedure should be compared to results of a non-destructive technique, which does not require sample dissolution, such as X-ray fluorescence.

10.1.6 Because of the differences between makes and models of atomic absorption spectrometers, formulating detailed instructions applicable to every instrument is difficult. Consequently, the user should follow manufacturer's operating instructions.

10.2 Flame Procedure

10.2.1 Set the atomic absorption spectrometer for the standard conditions as follows: choose the correct hollow cathode lamp or electrode less discharge lamp, install, and align in the instrument; position the monochromator at the value recommended by the manufacturer; select the proper monochromator slit width; set the light source current according to the manufacturer's recommendation; light the flame and regulate the flow of fuel and oxidant; adjust the burner for maximum absorption and stability; and balance the meter.

10.2.2 If using a chart recorder, set the chart speed at 8-15 cm/min and turn on the power, servo, and chart drive switches. Adjust the chart pen to the 5% division line. Also adjust instrument span using highest calibration standard. While aspirating the standard sample, span instrument to desired response.

10.2.3 Run a series of standards of the metal of interest and construct a calibration curve as in Section 12.3. Set the curve corrector of a direct reading instrument to read the proper concentration.

10.2.4 To evaluate the contribution to the absorbance from the filters and reagents used, blank samples must be analyzed. Usually blanks will be provided with each set of samples. Subject the blank to the entire analysis procedure. The absorbance obtained from the aspiration of the blank solution is subtracted from the sample absorbance.

10.2.5 The sample can be analyzed from the centrifuge tube or an appropriate amount of sample decanted into a sample analysis tube. In either case, care should be taken not to disturb the settled solids. At least the minimum sample volume required by the instrument should be available for each aspiration.

10.2.6 Aspirate samples, standards, and blank into the flame and record the absorbance. Aspirate distilled water after each sample or standard. If using a recorder, wait for response to stabilize before recording absorbance.

10.2.7 To the extent possible, all determinations should be based on replicate analyses.

10.2.8 Determine the average absorbance value for each known concentration and correct all absorbance values by subtracting the blank absorbance value. Determine the metal concentration in μg

metal/mL from the calibration curve as presented in Section 12.3 or by direct reading from the instrument.

10.2.8.1 Dilute samples that exceed the calibration range by taking an aliquot of the sample and diluting the sample to a known volume with a solution of the same acid concentration and ionization and chemical suppressants as the calibration standards and reanalyzed.

10.2.8.2 Check for drift of the zero point resulting from possible nebulizer clogging, especially when dealing with samples of low absorbance.

10.2.8.3 Aspirate a mid-range standard with sufficient frequency (once every 10 samples, after every 5 full MSAs or every 2 hr) to verify the continuing accuracy of the calibration curve.

10.3 Furnace Procedure

10.3.1 In graphite furnace atomic absorption, only a few micro liters of the sample are placed in the furnace. Within seconds or fractions of a second, the sample is atomized. Graphite furnace analysis is more sensitive for trace element determination than the flame detection limit because it requires a smaller sample volume. As a general rule, samples that can be analyzed by flame or furnace may be more conveniently run with flame since flame atomic absorption is faster, simpler, and has fewer interference problems.

10.3.2 When some samples are atomized, they may absorb or scatter light causing sample absorbance to be greater than it should be, necessitating background correction. If some sample remains unburned, memory effects can occur. Blank burns should be run, and the graphite furnace should be cleaned by running at full power at intervals during determination series.

10.3.3 Inject a measured μL aliquot of sample into the furnace and atomize. If the concentration found is greater than the highest standard, the sample should be diluted in the same acid matrix and reanalyzed. Multiple injections can improve accuracy and help detect furnace pipetting errors.

10.3.4 To verify the absence of interference, follow the serial dilution procedure given below.

10.3.4.1 Withdraw 2 equal aliquots from the sample. Add a known amount of analyte to one of the aliquots and dilute both to the same predetermined volume. (The dilution volume should be based on the analysis of the undiluted sample. Preferably, the dilution should be 1:4. Keep in mind that the diluted value should be at least 5 times the instrument detection limit. Under no circumstances should the dilution be less than 1:1.)

10.3.4.2 Analyze the diluted aliquots and compare the unspiked results, multiplied by the dilution factor, to the original determination. Agreement of the results (within 10%) indicates the absence of interference. Comparison of the actual signal from the spike with the expected response from the analyte in an aqueous standard should help confirm the finding from the dilution analysis.

10.3.5 Run a mid level check standard and a blank standard after every 10 sample injections, after 5 full MSAs, or at 2-hr intervals. Standards are run in part to monitor the life and performance of the graphite tube. Lack of reproducibility or significant change in the signal for the standard indicates that the tube should be replaced. Tube life depends on sample matrix and atomization temperature. A conservative estimate of tube life is about 50 firings. A pyrolytic coating will extend that estimated life by a factor of three.

10.3.6 To determine the metal concentration by direct aspiration and furnace, read the metal value in μg/L from the calibration curve or directly from the read-out of the instrument.

10.3.7 If sample dilution was required, calculate the final concentration using the following formula:

$$\mu g/L \text{ metal in sample} = A \times (C + B) / C$$

where:

A = μg/L of metal in diluted aliquot from calibration curve.

B = Acid blank matrix used for dilution, mL.

C = Sample aliquot, mL.

10.4 Method of Standard Additions

10.4.1 If chemical interferences are suspected, the method of standard additions may be used to evaluate them; and if deemed desirable, the method may be used to make an accurate determination of metal concentration in the presence of an interference.

10.4.2 Take three identical portions from a sample. Dilute the first portion to a known volume with the solvent used in the standard solutions. Add known but different amounts of the metal of interest to the second and third portions. The additions and dilutions should be kept as small as possible by using micro liter pipets.

10.4.3 Aspirate each portion and measure the absorbance. Plot the absorbance values (Y-axis) against metal concentration (X-axis). Consider the first portion concentration to be 0 and that of the others as the known amount added to each. Draw the curve through these points; it should be a straight line. The metal concentration in the unknown is measured as the distance from the origin along the X-axis in the negative direction using the same concentration scale factor.

10.4.4 Compare the values obtained for the same samples by direct comparison to the calibration curve. If the values are the same, no chemical interferences are present, and subsequent analyses can be made by direct comparison to the standard working curve.

10.4.5 If the slope of the spiked sample curve is not parallel to the original calibration curve, an interference may be present. Standard additions may allow metal concentration to be determined in the presence of interference by using the standard addition curve as the calibration. This method can give incorrect values if the interferant does not associate with the additions to the same extent as in the original analyte.

10.5 Background Correction Methods

10.5.1 Spurious absorption, absorption not due to the atoms of the metal being determined, can be caused by the presence of small particles in the resonance beam, the presence of radicals or molecular species resulting from components of the prepared sample, or from combustion reactions of the flame itself. The effects of background absorption and scatter are an increase in the absorption signal and in the noise component of the signal. The final results may be considerably higher than the true value and a loss of sensitivity because of the increased noise. Various correction systems exist as indicated in the following sections.

10.5.2 The deuterium arc automatic correction system operates by rapidly alternating light from a deuterium arc and the hollow cathode tube through the sample. The light from the arc is essentially unabsorbed by the element, but absorbed by the background. The difference is the element's actual absorbance. Most deuterium arc systems correct up to 0.5 absorbance (about 70% absorption) at wavelengths as high as that of copper (324.7 nm). Improved optical designs can extend this performance.

10.5.3 The Zeeman effect automatic correction system operates by placing the light source or atomizer between the poles of a strong magnet, thus splitting the spectral line emitted or absorbed by the atoms of interest into a central π component having the original wavelength and two sideband σ components, which are shifted in wavelength. The components are polarized in different planes relative

to the magnetic field. Various magnet and polarizer configurations are employed in various instrument designs, all ultimately allowing subtraction of the σ signal from the π signal to produce background correction. The Zeeman system, though expensive, overcomes some weaknesses inherent in the deuterium arc system.

10.5.4 The Smith-Hieftje automatic correction system operates on the principle of self-reversal: when excessive current is passed through a hollow cathode lamp, the emission line is broadened and absorbance from the analyte is reduced. Correction is accomplished by comparing low current absorption where the sample and the background absorb light to a brief pulse of much higher current causing self-reversal and greatly reducing the sample's absorption, while background absorption remains proportional. The background correction is determined by the difference between the two signals. The Smith-Hieftje system also overcomes some weaknesses inherent in the deuterium arc system and is comparable to the Zeeman system.

10.5.5 For atomic absorption spectrometers without automatic background correction devices, background correction can be accomplished by using a deuterium continuum lamp.

10.5.5.1 Measure the absorbance of a sample and a suitable standard in the usual manner.

10.5.5.2 Remove the hollow cathode lamp and replace with the continuum lamp; without changing the flame conditions or any other parameters, adjust the output of the amplifier to read 0 absorbance.

10.5.5.3 Measure the absorbance of the same sample and standard and subtract the continuum lamp values from the hollow cathode lamp values to get an absorbance value free of background absorbance interference.

11. Spectrometer Calibration Curve

[Note: Calibration is one of the most important factors in maintaining good quality data. Equipment must be calibrated regularly, when first purchased, after maintenance, and whenever audit checks indicate greater than acceptable deviation.]

11.1 The analytical application of atomic absorption, like other analytical methods, has a lower detection limit, which is specific for each individual instrument. Therefore, calibration curves must be constructed using not only standard solutions, but also standard conditions for each individual instrument. The standard conditions include instrumental parameters, burner gas flames, and aspiration rates. In routine sample analysis, several standards must be run with each set of samples so that the operating parameters are exactly the same for sample and standard. Standard procedures for analysis are supplied with most commercially available atomic absorption instruments. Standard curves must be constructed for each element, and standards must be analyzed each time a set of samples are run. The standard curves should list all parameters of the instrument, as well as sample preparation methods.

11.2 Prepare standard solutions from the solutions listed in Sections 8.4 and 8.5 to bracket the estimated concentration of the metal in the samples. Select at least three standards (plus the reagent blank) to cover the linear range indicated by the instrument manufacturer's instructions. Aspirate the standards into the flame and record the absorbance. Repeat until good agreement is obtained between replicates. Prepare a calibration graph by plotting absorbance (y-axis) versus the metal concentration in μg metal/mL (x-axis). Calculate the best fit straight line for the data points by the method of least squares (in Section 12.3.3), and draw it in. Use the best fit line or its equation to obtain the metal concentration in the samples to be analyzed.

11.3 Calculate the calibration line by the least squares regression procedure as follows:

$$y = mx + c$$

where:

$m = n[\Sigma x y) \Sigma x(\Sigma y)] / [n(\Sigma x^2) - (\Sigma x)^2]$.

$c = y - mx$.

n = number of points used to fit the curve.

y = arithmetic mean of the y-coordinates for n points.

x = arithmetic mean of the x-coordinates for n points.

Σxy = the sum of the products of the x-coordinate times the y-coordinate for the n points.

Σx = the sum of the x-coordinates of n points.

Σy = the sum of the y-coordinates of n points.

Σx^2 = the sum of the squares of the x-coordinates of n points.

$(\Sigma x)^2$ = the square of the sum of the x-coordinates of n points.

11.4 To determine stability of the calibration curve, analyze a control standard and reagent blank sample before the first sample, after every subsequent 10th sample, and after the last sample. Vary the control standard concentration by alternating, in run sequence, a value less than 1 μg metal/mL and a value between 1 and 10 μg metal/mL. If either standard deviates by more than 5% from the value predicted by the calibration curve, take corrective action and repeat the previous 10 analyses.

12. Calculations

12.1 Sample Air Volume

At standard temperature and pressure (STP) [25°C and 760 mm Hg] for sample air volume rotameter, use the following equation:

$$V = [(Q_i + O_f) / 2]\, t$$

where:

V = air volume sampled, m^3.

Q_i = initial air flow rate, m^3/min at STP.

Q_f = final air flow rate, m^3/min at STP.

t = sampling period (elapsed time), min.

For samplers equipped with flow recorders:

$$V = Qt$$

where:
Q = average sampling rate, m^3/min at STP.

12.2 Metal Concentration

12.2.1 Estimation of Metal of Interest Concentration of the Blank Filter. For testing large batches of filters (>500 filters), select at random 20 to 30 filters from a given batch. For small batches (<500 filters) a lesser number of filters may be taken. Cut a 2.5 x 20.3 cm (1" x 8") strip from each filter. Analyze all strips separately.

12.2.2 Calculate total metal of interest in each filter as:

$$F_b = \mu g \text{ metal/mL} \times (40 \text{ mL/strip}) \times (9)$$

where:

F_b = amount of metal per 465 square cm (72 square in.) of blank filter, μg.
μg metal/mL = metal concentration determined from Section 11.2.
40/strip = total sample volume from microwave extraction procedure.
9 = 464.52 cm^2/51.61 cm^2.

12.2.3 Calculate the mean, F_m, and the relative standard deviation (100 x standard deviation/mean).

$$F_m = \Sigma F_{bi} / n$$

where:

F_m = average amount of metal per 72 $in.^2$ of filter, μg
F_{bi} = amount of metal per 72 $in.^2$ for each filter, μg
n = number of blank filters analyzed.

12.2.4 The standard deviation (SD) of the analyses for the blank filters is given by equation

$$SD = [\Sigma (F_{bi} - F_m)^2 / n - 1]^{1/2}$$

The relative standard deviation (RSD) is given by the following equation:

$$RSD = 100 \text{ SD} / F_m$$

If the relative standard deviation is high enough so that in the analyst's opinion subtraction of F_m the mean may result in a significant error in the μg metal/m^3, the batch should be rejected. For acceptable batches, use the value of F_m to correct all analyses (Section 13.1.2.2) collected using that batch of filters. If F_m is below the lower detectable limit (LDL), no correction is necessary.

12.2.5 Calculation of Metal of Interest Concentration of the Exposed Filter. Metal concentration in the air sample can be calculated from data tabulated on data record form (Figure 2) as follows:

$$C = [(\mu g \text{ metal/mL} \times (40 \text{ mL/strip})(9) - F_m] / V_{std}$$

where:

C = concentration, μg metal/std. m^3.

μg metal/mL = metal concentration determined from Section 11.

40 mL/strip = total sample volume,

$$9 = \frac{\text{[Useable filter area, 20 cm x 23 cm (8" x 9")]}}{\text{[Exposed area of one strip, 2.5 cm x 20 cm (1" x 8")]}}$$

F_m = average concentration of blank filters, μg.

V_{std} = air volume pulled through filter, std. m^3.

13. Maintenance

13.1 Scheduled maintenance of the sampling equipment and the atomic absorption spectrophotometer will reduce downtime and remedial maintenance. The major maintenance checks are summarized in Table 3. Record all maintenance activities in a maintenance log book. Normally, two to three remedial maintenance activities are required per year. Major maintenance and calibration should be done by service engineers or qualified operators. The following general maintenance procedures should be carried out only after consulting the manufacturer's manual.

13.2 Light Source

13.2.1 When problems are suspected with a light source, check the hollow cathode lamp or electrode less discharge lamp mounting bracket and lamp connection. Make sure the instrument is plugged in, turned on, and warmed up. If line voltages are low, operate the power supply from a variac that is set to give maximum voltage. Lamp current meter fluctuation can be reduced by using a constant voltage sine wave transformer.

13.2.2 As the lamp is used, a loss of the element from the hollow cathode source occurs. Some lamps will evolve hydrogen, which will contaminate the element's spectrum and reduce sensitivity and calibration linearity. Hydrogen contamination may be reversed by running the lamp with reversed polarity at a few mill amperes for several minutes.

13.3 No Absorbance Response

Make sure that the lamp is lighted, properly aligned, and that the wavelength, slit, and range controls are properly adjusted. If the meter cannot be zeroed, adjust the level of the burner head to avoid intercepting the light beam and clean the lamp and window, or meter cover windows, with a diluted solution of a mild detergent; rinse several times with distilled water. Dirty windows or lenses are a major problem when operating the instrument below 2300 A° (230 nm).

13.4 Readout Noisy, Flame On

Check the lamp current setting, fuel, and oxidizer flow rates; the leviner to make sure it is draining properly; the nebulizer for corrosion around the tip; the adjustment of the nebulizer capillary; the burner head (it may need cleaning with razor blade); the acetylene cylinder pressure; the air pressure; and the air line filter.

13.5 Poor Sensitivity (Within 50% of That Suggested in the Analytical Method Book)

Check the sensitivity obtainable for several other elements to ascertain that the low sensitivity is not due to the lamp used. Check the slit width, wavelength, range setting, burner alignment, adjustment of the nebulizer capillary, and fuel/oxidant flow rate ratio to ascertain that it is optimized for the element to be analyzed. Make sure that the lamp current is not above the recommended value. Check the lamp alignment and the concentration of the standard solution used. All other maintenance problems, such as cleaning of mirrors or gratings, should be discussed with the manufacturer or service representative.

14. Quality Assurance (QA) and Performance Criteria

14.1 QA Program

14.1.1 To achieve quality data, two essential considerations are necessary: the measurement process must be in a state of statistical control at the time of the measurement and the systematic errors, when combined with the random variation (errors of measurement), must result in an acceptable level of uncertainty. To produce good quality data, perform quality control checks and independent audits of the measurement process, document these data, and use materials, instruments, and measurement procedures that can be traced to an appropriate standard of reference. Repeat measurements of standard reference samples (primary, secondary, and/or working standards) aid in establishing a condition of process control. The working calibration standards should be traceable to standards of higher accuracy.

Several other procedures are usually necessary to ensure that the instrument is providing good quality data. These procedures are documented in the *EPA Contract Laboratory Program (CLP) Methods*. Following the initial instrument calibration with a calibration blank and at least three calibration (standard reference) samples, a calibration verification sample is prepared at the midpoint of the calibration curve from certified stock solutions. The use of additional calibration standards and blanks during the sample analyses were discussed in Section 11. In addition to the standard and blank samples, laboratory control spike samples, matrix spike samples, and duplicate spike samples are prepared and analyzed with most sample batches. A summary of the quality control procedures for GFAA is provided in Table 4. Depending upon the specific requirements of the client, some of these procedures may be deleted, or additional procedures may be initiated to comply with specific analysis requirements.

14.1.2 The user should develop, implement, and maintain a quality assurance program to ensure that the sampling system is operating properly and collecting accurate data. Established calibration, operation, and maintenance procedures should be conducted on a regularly scheduled basis and should be part of the quality assurance program. The manufacturer's instruction manual should be followed and included in the QA program. Additional QA measures (e.g., troubleshooting) as well as further guidance in maintaining the sampling system are provided by the manufacturer.

14.1.2.1 Consult the latest copy of the *Quality Assurance Handbook for Air Pollution Measurement Systems* to determine the level of acceptance of zero and span errors.

14.1.2.2 For detailed guidance in setting up a quality assurance program, refer to the *EPA Quality Assurance Handbook* and the *Code of Federal Regulations*.

14.1.3 Sampling Quality Assurance

14.1.3.1 Select a site with the highest expected geometric mean concentrations.

14.1.3.2 Locate two high-volume samplers within 4 m of each other, but at least 2 m apart, to preclude air flow interference.

14.1.3.3 Identify one of the two samplers at the time of installation as the sampler for normal routine monitoring; identify the other as the duplicate sampler.

14.1.3.4 Be sure that the calibration, sampling, and analysis are the same for the collocated sampler as for all other samplers in the network.

14.1.3.5 Operate the collocated sampler whenever the routine sampler is operated.

14.1.3.6 Use the differences in the concentrations (μg metal/std. m^3) between the routine and duplicate samplers to calculate precision.

14.1.4 Analysis Quality Assurance

14.1.4.1 Perform a linearity test on the atomic absorption spectrometer employing a series of standard metal solutions. This procedure should be done at regular intervals and when the analyst suspects erroneous readings. Refer to Table 3 and manufacturer's instructions for details on instrument performance checkout.

14.1.4.2 Obtain Standard Reference Materials (SRM) from National Institute Bureau of Standards Technology and EPA reference standards. Analyze these standards at regular intervals along with samples and record accuracy.

14.1.5 Standard Operating Procedures (SOPs)

14.1.5.1 SOPs should be generated by the users to describe and document the following activities in their laboratory:

- assembly, calibration, leak check, and operation of the specific sampling system and equipment used;
- preparation, storage, shipment, and handling of the sampler system;
- purchase, certification, and transport of standard reference materials; and
- all aspects of data recording and processing, including lists of computer hardware and software used.

14.1.5.2 Provide specific instructions in the SOPs that are available and understood by the personnel conducting the monitoring work.

14.2 Performance Criteria

The sensitivity, detection limit, and optimum working range for each metal are given in Table 1. The values for the sensitivity and detection limits are instrument-dependent and may vary from instrument to instrument.

14.2.1 The sensitivity is defined as that concentration of a given element that will absorb 1% of the incident radiation (0.0044 absorbance units) when aspirated into the flame. The atomic absorption sensitivity for an element can be calculated using the absorbance of a know concentration and solving the equation below.

conc of std / measured abs = sensitivity / 0.0044

therefore:

sensitivity = (conc of std x 0.0044) / measured abs

14.2.2 The detection limit is defined as that concentration of a given element that produces a signal-to-noise ratio of 2, which is the lowest limit of concentration that can be distinguished from zero.

[Note: The blank signal is defined as that signal that results from all added reagents and a clean filter that has been extracted exactly as the samples.]

14.2.3 The working range for an analytical precision better than 3% is generally defined as those sample concentrations that will absorb 10%-70% of the incident radiation (0.05-0.52 absorbance units.)

15. Method Safety

15.1 This procedure may involve hazardous materials, operations, and equipment. This method does not purport to address all of the safety problems associated with its use. The user must establish appropriate safety and health practices and determine the applicability of regulatory limitations prior to the implementation of this procedure. This requirement should be part of the user's SOP manual.

15.2 Hazards to personnel exist in the operation of the atomic absorption spectrometer. Atomic absorption units are potentially dangerous when using a nitrous oxide/acetylene flame. Do not operate these unit until the manufacturer's instruction manual has been read and completely understood. Follow all safety instructions in the manual and the safety requirements pertaining to the handling, storage, and use of compressed gases.

15.3 Hazards to personnel exist in all operations in which hot, concentrated mineral acids are used. The appropriate laboratory procedures for working with reagents of this nature should be observed. Ultrasonic extraction using room temperature acids reduces this hazard.

15.4 Many of the metals that can be determined by atomic absorption are health hazards (for example, cadmium, arsenic, beryllium, mercury) and must be handled in a manner consistent with the danger they present.

15.5 The instrument exhaust gases contain the combustion products of the flame as well as metal vapor from the sample. Both the combustion products and the metal vapor are definite personnel hazards. The instrument combustion gases should be mechanically exhausted from the laboratory.

16. References

1. *Code of Federal Regulations*, Vol. 40, Part 58, Appendix A, B.

2. "Reference Method for Lead," *Code of Federal Regulations*, Vol.43(194), Appendix G, October 5, 1978.

3. *Methods of Air Sampling and Analysis*, Second Edition, Ed. M. Katz, APHA Intersociety Committee, 1977.

4. *Technical Assistance Document for Sampling and Analysis of Toxic Organic Compounds in Ambient Air*, EPA-600/4-83-027, U. S. Environmental Protection Agency, Research Triangle Park, NC, 1983.

5. Harper, S., et al., "Simplex Optimization of Multielement Ultrasonic Extraction of Atmospheric Particulates," *Analytical Chemistry*, Vol.55(9), August 1983.

6. Kahn, H.L., et al., "Background Correction in AAS," *American Laboratory*, November 1982.

7. *Quality Assurance Handbook for Air Pollution Measurement Systems, Volume II - Ambient Air Specific Methods (Interim Edition)*, EPA 600/R-94/038b.

8. *Air Pollution*, W. Strauss and S. J. Main Waring, Edward Amold (Publishers) LTD, London, England, 1984.

9. Slavin W., *Atomic Absorption Spectroscopy*, Interscience Publishers, New York, NY, 1968.

10. Ramirez Munoz, J., *Atomic Absorption Spectroscopy*, Elsevier Publishing Company, New York, NY, 1968.

11. Smith, G. F., *Wet Chemical Oxidation of Organic Compositions*, G. Frederick Smith Chemical Company, Columbus, OH, 1965.

12. "Some Fundamentals of Analytical Chemistry," *ASTM Special Technical Publication 564*, Philadelphia, PA, 1973.

13. Willard, H. H., and Rulf, C. L., "Decomposition and Dissolution of Samples: Inorganic," *Treatise on Analytical Chemistry*, Part 1, Vol. 2, Eds. Kotthoff, I.M. and Elving, P.J, Interscience, New York, NY, 1961.

14. *Laboratory Manual Physical/Chemical Methods*, SW-846 Third Edition, U. S. Environmental Protection Agency, Washington, DC, 1986.

TABLE 1. SENSITIVITY, DETECTION LIMITS, AND OPTIMUM WORKING CONCENTRATION FOR 23 METALS

Element	Sensitivity, μg/ml[a]	Optimum Range, μg/ml	Method Detection Limit[b]		TLV[c] mg/m^3
			μg/ml[a]	ng/m^3	
Ag	0.06	0.5-5.0	0.002	0.4	0.1 (metal)
Al	1.0	5-50	0.02	4.4	0.01 (soluble cmpds) ten (metal and oxide)
Ba	0.20	1-10	0.008	1.8	0.5 (soluble cmpds)
Bi	0.5	1-10	0.025	5.5	NL
Ca	0.08	0.1-1.0	0.0005	0.1	2 CAO)
Cd	0.025	0.1-1.0	0.001	0.2	0.05
Co	0.15	0.5-5.0	0.01	2.2	0.1 (metal fume and dust)
Cr	0.1	0.5-5.0	0.003	0.7	0.05 (chromic acid and chromates) 0.5 (soluble chromic, chromous salts)
Cu	0.09	0.5-5.0	0.002	0.4	0.2 (fume) 1 (dust and mists)
Fe	0.12	0.5-5.0	0.005	1.1	5 (iron oxide fume) 1 (soluble cmpds)
In	0.7	5-50	0.02	4.4	0.1 (metal and cmpds)
K	0.04	0.1-1.0	0.002	0.4	2 (as KOH)
Li	0.035	0.1-1.0	0.0003	0.1	0.025 (as Lithium Hydride)
Mg	0.004	0.05-0.5	0.0001	0.1	10 (as MgO fume)
Mn	0.055	0.5-5.0	0.002	0.4	5 (metals and cmpds)
Na	0.015	0.05-0.50	0.0002	0.1	2 (as NaOH)
Ni	0.15	0.5-5.0	0.005	1.1	0.1 (soluble cmpds)
Pb	0.5	1-10	0.01	2.2	0.150 (inorganic cmpds, fume dust)
Rb	0.1	0.5-5.0	0.002	0.4	NL
Sr	0.12	0.5-5.0	0.002	0.4	NL
Tl	0.5	5-50	0.01	2.2	0.1 (soluble cmpds)
V	1.7	10-100	0.04	8.8	0.5 (V_2O_5 dust as V) 0.05 (V_2O_5 fume as V)
Zn	0.018	0.1-1.0	0.001	0.2	1 ($ZnCl_2$ fume) 5 (ZnO fume)

[a]Sensitivity and Detection Limit data are taken from "Analytical Methods for Atomic Absorption Spectrophotometry," Perkin-Elmer Corp., Norwalk, Conn., 1976. Note: These detection limits represent the ultimate values since the blanks resulting from the reagents and the filter material have not been taken into account.

[b]All values are expressed as elemental concentrations except as noted. Detection limits expressed as ng/m^3 based upon sampling rate of 1.13 m^3/min for 24-hr for a total sample volume of 1,627.2 m^3; factors of 9 for partial filter analysis; digestion of 0.040 L/filter.

[c]NL signifies No Limit for this element or its compounds.

TABLE 2. THE AAS FLAME AND OPERATING CONDITIONS FOR EACH ELEMENT

Element	Type of Flame	Analytical Wavelength nm	Interferences[b]	Remedy[b]	Reference
Ag	Air-C_2H_2 (oxidizing)	328.1	10_3-, WO_4^{-2}, MnO_4^{-2}	c	(5)
Al[a]	N_2O-C_2H_2 (reducing)	309.3	ionization, SO_4^{-2},V	c,d,e	(4)
Ba	N_2O-C_2H_2 (reducing)	553.6	ionization, large concentration Ca	d,f	(1,4)
Bi	Air-C_2H_2 (oxidizing)	223.1	none known		
Ca	Air-C_2H_2 (reducing) N_2O-C_2H_2	422.7	ionization and chemical	d,e	(1,4)
Cd	Air-C_2H_2 (oxidizing)	228.8	none known		
Co[a]	Air-C_2H_2 (oxidizing)	240.7	none known		
Cr[a]	Air-C_2H_2 (reducing)	357.9	Fe, Ni	c	(4)
Cu	Air-C_2H_2 (oxidizing)	324.8	None known		
Fe	Air-C_2H_2 (oxidizing)	248.3	high Ni concentration, Si	c	(1,4)
In	Air-C_2H_2 (oxidizing)	303.9	Al, Mg, Cu, Zn, $H_xPO_4^{x-3}$	c	(11)
K	Air-C_2H_2 (oxidizing)	766.5	ionization	d	(1,4)
Li	Air-C_2H_2 (oxidizing)	670.8	ionization	d	(12)
Mg	Air-C_2H_2 (oxidizing) N_2O-C_2H_2 (oxidizing)	285.2	ionization and chemical	d,e	(1,4)
Mn	Air-C_2H_2 (oxidizing)	279.5	none known		
Na	Air-C_2H_2 (oxidizing)	589.6	ionization	e	(1,4)
Ni	Air-C_2H_2 (oxidizing)	232.0	none known		
Pb	Air-C_2H_2 (oxidizing)	217.0 283.3 283.3	Ca, high concentration SO_4^{-2}	c	(9)
Rb	Air-C_2H_2 (oxidizing)	780.0	ionization	d	(1,10)
Sr	Air-C_2H_2 (oxidizing) N_2O-C_2H_2 (oxidizing)	460.7	ionization and chemical	d,e	(1,10)
Tl	Air-C_2H_2 (oxidizing)	276.8	none known		
Va	N_2O-C_2H_2 (oxidizing)	318.4	none known in N_2O-C_2H_2 flame		
Zn	Air-C_2H_2 (oxidizing)	213.9	none known		

[a]Some compounds of these elements will not be dissolved by the procedure described here. When determining these elements, one should verify that the types of compounds suspected in the sample will dissolve using this procedure (see 12.2).

[b]High concentrations of silicon in the sample can cause an interference for many of the elements in this table and may cause aspiration problems. No matter what elements are being measured, if large amounts of silica are extracted from the samples, the samples should be allowed to stand for several hours and centrifuged or filtered to remove the silica.

[c]Samples are periodically analyzed by the method of additions to check for chemical interferences. If interferences are encountered, determinations must be made by the standard additions method or, if the interferant is identified, it may be added to the standards.

[d]Ionization interferences are controlled by bringing all solutions to 1000 ppm cesium (samples and standards).

[e]1000-ppm solution of lanthanum as a releasing agent to all samples and standards.

[f]In the presence of very large calcium concentrations (greater than 0.1%), molecular absorption from CaOH may be observed. This interference may be overcome by using background corrections when analyzing for barium.

TABLE 3. MAINTENANCE CHECKS

Equipment	Acceptance Limits	Frequency and Method of Measurement	Action if Requirements Are Not Met
Sampler motor	400 h operation of motor; absence of malfunction	Visually check upon receipt and after each 400 h of operation	Replace motor brushes, other maintenance as indicated
Faceplace gasket	Absence of leaks at filter seal	Visually check after each sampling period	Replace gasket
Rotameter	Absence of foreign materials; stable operations	Visually check for each sample	Clean; replace if damaged
Motor gaskets	Leak tight fit	Visually check each 400 h of operation	Replace gaskets
Sampling head	Absence of leaks	Visually check each 200 h of operation	Replace sampling head
Atomic Absorption spectrophotometer	Absence of dirt and/or contamination in light source systems; absence of current fluctuation; manufacturer's specifications on sensitivity achieved	Clean up and adjust trouble parts, visually check energy meter needle; visually check gauge, and adjust light passing systems, and clean up lamp and window and photometer cover window; check for possible troubled parts	Replace damaged parts; use constant voltage transformer; contact manufacturer

TABLE 4. GFAA QUALITY CONTROL SUMMARY

QC procedure	Typical frequency	Acceptance criteria	Action, if outside criteria
Initial calibration	At the beginning of the analysis	Linear correlation coefficient ≥ 0.995	Terminate analysis and restart the run with initial calibration
ICV	Immediately after initial calibration	90%-110% of the actual concentration	Terminate analysis, recalibrate, and restart the run
ICB	Immediately after the ICV	See Section 9.3 < RDL	Terminate analysis, recalibrate, and restart the run
CCV	Analyzed before the first sample, after every 10 samples or 5 full MSAs, and at the end of the run	80%-120% of the actual concentration	Terminate analysis, recalibrate, and reanalyze samples from last acceptable CCV
CCB	Analyzed following each CCV	See Section 9.5 < RDL	Terminate analysis, recalibrate, and reanalyze samples from last acceptable CCB
Method blank	1 per 20 samples, a minimum of 1 per batch	See Section 9.7 < RDL	Identify affected analytes in analysis report
LCS	1 per 20 samples, a minimum of 1 per batch	80%-120% recovery, with the exception of Sb	Qualify results in analysis report
MSD	1 per 10 samples per matrix type	RPD ≤ 20%	Report and qualify results in analysis report
Matrix spike (MS)	1 per 10 sample per matrix type	Percent recovery of 75%-125%	Perform appropriate interference tests
Serial dilution	1 per matrix type, if MS/MSD criterion fails and if needed	≤ 10% Difference	Analysis by method of standard addition (MSA)
Post-digestion spike	1 per matrix type, if MS/MSD criterion fails and if needed	%R = 85%-115%	Analysis by MSA recommended
Sample dilution	Dilute sample beneath the upper calibration limit, minimizing the dilution factor	As needed	Not applicable

Legend of Abbreviations (alphabetical order):
CCB = Continuing Calibration Blank
CCV = Continuing Calibration Verification
ICB = Initial Calibration Blank
ICV = Initial Calibration Verification
LCS = Laboratory Control Spike
MSD = Matrix Spike Duplicate

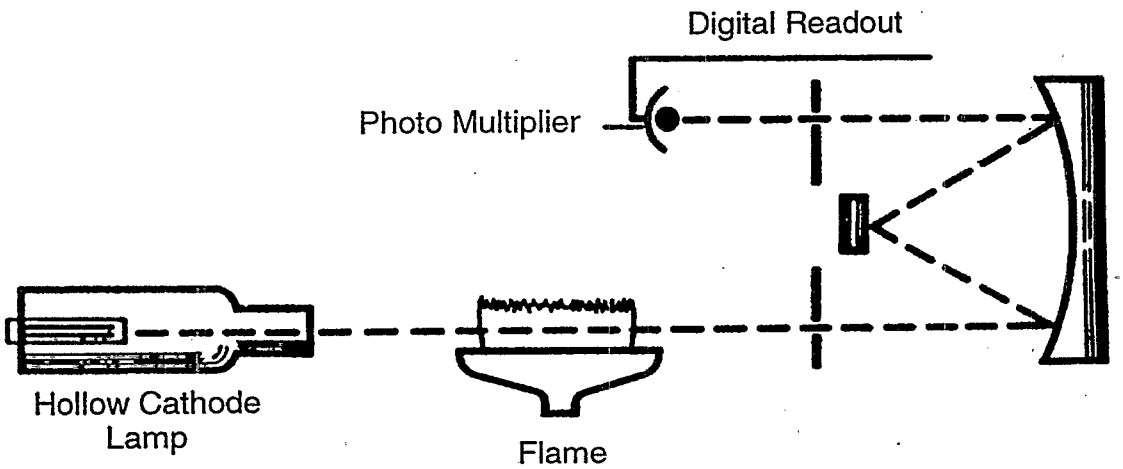

Figure 1. Schematic of atomic absorption.

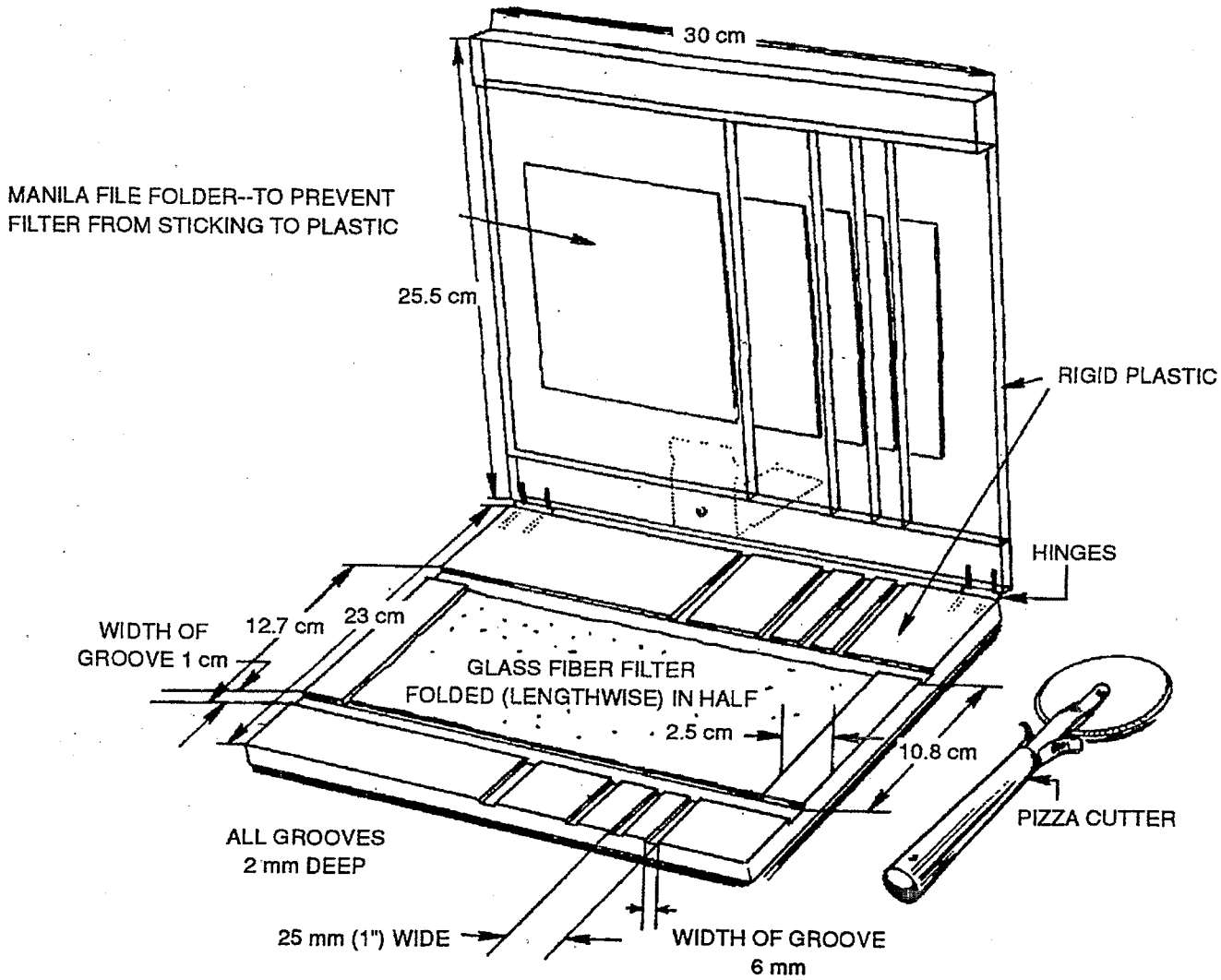

Figure 2. Schematic of filter cutting apparatus.

EPA/625/R-96/010a

Compendium of Methods for the Determination of Inorganic Compounds in Ambient Air

Compendium Method IO-3.3

DETERMINATION OF METALS IN AMBIENT PARTICULATE MATTER USING X-RAY FLUORESCENCE (XRF) SPECTROSCOPY

Center for Environmental Research Information
Office of Research and Development
U.S. Environmental Protection Agency
Cincinnati, OH 45268

January 1997

Method IO-3.3

Acknowledgements

This Method is a part of *Compendium of Methods for the Determination of Inorganic Compounds in Ambient Air* (EPA/625/R-96/060a), which was prepared under Contract No. 68-C3-0315, WA No. 2-10, by Midwest Research Institute (MRI), as a subcontractor to Eastern Research Group, Inc. (ERG), and under the sponsorship of the U.S. Environmental Protection Agency (EPA). Justice A. Manning, Center for Environmental Research Information (CERI), and Frank F. McElroy, National Exposure Research Laboratory (NERL), both in the EPA Office of Research and Development, were the project officers responsible for overseeing the preparation of this method. Other support was provided by the following members of the Compendia Workgroup:

- James L. Cheney, Corps of Engineers, Omaha, NB
- Michael F. Davis, U.S. EPA, Region 7, KC, KS
- Joseph B. Elkins Jr., U.S. EPA, OAQPS, RTP, NC
- Robert G. Lewis, U.S. EPA, NERL, RTP, NC
- Justice A. Manning, U.S. EPA, ORD, Cincinnati, OH
- William A. McClenny, U.S. EPA, NERL, RTP, NC
- Frank F. McElroy, U.S. EPA, NERL, RTP, NC

This Method is the result of the efforts of many individuals. Gratitude goes to each person involved in the preparation and review of this methodology.

Author(s)

- Bob Kellog, ManTech, RTP, NC
- William T. "Jerry" Winberry, Jr., MRI, Cary, NC

Peer Reviewers

- David Brant, National Research Center for Coal and Energy, Morgantown, WV
- John Glass, SC Department of Health and Environmental Control, Columbia, SC
- Roy Bennet, U.S. EPA, RTP, NC
- Charles Lewis, EPA, RTP, NC
- Ray Lovett, West Virginia University, Morgantown, WV

DISCLAIMER

This Compendium has been subjected to the Agency's peer and administrative review, and it has been approved for publication as an EPA document. Mention of trade names or commercial products does not constitute endorsement or recommendation for use.

Method IO-3.3
Determination of Metals in Ambient Particulate Matter Using X-Ray Fluorescence (XRF) Spectroscopy

TABLE OF CONTENTS

		Page
1.	Scope	3.3-1
2.	Applicable Documents	3.3-2
	2.1 ASTM Documents	3.3-2
	2.2 U.S. Government Documents	3.3-2
	2.3 Other Documents	3.3-3
3.	Summary of Method	3.3-3
4.	Significance	3.3-3
5.	Definitions	3.3-4
6.	Description of Spectrometer	3.3-5
7.	Caveats	3.3-6
8.	Sample Preparation	3.3-7
9.	Spectral Acquisition and Processing	3.3-7
10.	Data Reporting	3.3-8
11.	Calibration	3.3-9
12.	Detection Limits	3.3-10
13.	Quality Control	3.3-10
14.	Precision and Accuracy	3.3-11
15.	References	3.3-11

Chapter IO-3
CHEMICAL SPECIES ANALYSIS OF FILTER-COLLECTED SPM

Method IO-3.3
DETERMINATION OF METALS IN AMBIENT PARTICULATE MATTER USING X-RAY FLUORESCENCE (XRF) SPECTROSCOPY

1. Scope

1.1 During a span of more than 2 decades, the U. S. Environmental Protection Agency (EPA) has developed and applied x-ray fluorescence (XRF) to the analysis of ambient and source aerosols using both energy and wavelength dispersive spectrometers. Inorganic Compendium Method IO-3.3 briefly describes the agency's experience with XRF and informs the reader of its capability in elemental aerosol analysis and attempts to give a brief account of what is involved in its application. The procedures described have been in a continual state of evolution beginning with those in use on a special purpose spectrometer designed by Lawrence Berkeley Laboratory (LBL) and eventually applied to a commercially available instrument manufactured by Kevex. It is for the Kevex spectrometer to which this method applies.

1.2 The area of toxic air pollutants has been the subject of interest and concern for many years. Recently the use of receptor models has resolved the elemental composition of atmospheric aerosol into components related to emission sources. The assessment of human health impacts resulting in major decisions on control actions by Federal, state, and local governments is based on these data. Accurate measures of toxic air pollutants at trace levels is essential to proper assessments.

1.3 Suspended particulate matter (SPM) in air generally is considered to consist of a complex multi-phase system consisting of all airborne solid and low vapor pressure, liquified particles having aerodynamic particle sizes ranging from below 0.01 microns to 100 (0.01 μm to 100 μm) microns and larger. Historically, measurement of SPM has concentrated on total suspended particulates (TSP) with no preference to size selection.

1.4 The most commonly used device for sampling TSP in ambient air is the high-volume sampler, which consists essentially of a blower and a filter, and which is usually operated in a standard shelter to collect a 24-hour sample. The sample is weighed to determine concentration of TSP and is usually analyzed chemically to determine concentration of various inorganic compounds. When EPA first regulated TSP, the National Ambient Air Quality Standard (NAAQS) was stated in terms of SPM with aerodynamic particle size of < 100 μm captured on a filter as defined by the high-volume TSP sampler. Therefore, the high-volume TSP sampler was the reference method. The method is codified in 40 *CFR* 50, Appendix B.

1.5 More recently, research on the health effects of TSP in ambient air has focused increasingly on particles that can be inhaled into the respiratory system, i.e., particles of aerodynamic diameter of < 10 μm. These particles are referred to as PM_{10}. It is now generally recognized that, except for toxic materials, it is this PM_{10} fraction of the total particulate loading that is of major significance in health effects. Therefore, the primary NAAQS for SPM is now stated in terms of PM_{10} rather than TSP. The reference method for PM_{10} is codified in 40 *CFR* 50, Appendix J and specifies a measurement principle based on extracting an ambient air sample with a powered sampler that incorporates inertial separation of PM_{10} size range particles and collection of these particles on a filter for a 24-hour period. Again,

the sample is weighed to determine concentration of PM_{10} and is usually analyzed chemically to determine concentration of various inorganic compounds.

1.6 Further research now strongly suggests that atmospheric particles commonly occur in two distinct modes, the fine (<2.5 μm) mode and the coarse (2.5 to 10.0 μm) mode. The fine or accumulation mode (also termed the respirable particles) is attributed to growth of particles from the gas phase and subsequent agglomerization, whereas the coarse mode is made up of mechanically abraded or ground particles. Because of their initially gaseous origin, the fine range of particle sizes includes inorganic ions such as sulfate, nitrate, and ammonium as well as combustion-form carbon, organic aerosols, metals, and other combustion products. Coarse particles, on the other hand, normally consist of finely divided minerals such as oxides of aluminum, silicon, iron, calcium, and potassium. Samplers which separate SPM into two size fractions of 0-2.5 μm and 2.5-10 μm are called dichotomous samplers.

1.7 Airborne particulate materials retained on a sampling filter, whether TSP, PM_{10} or dichotomous size fractions, may be examined by a variety of analytical methods. This method describes the procedures for XRF analysis as the analytical technique. The XRF method provides analytical procedures for determining concentration in ng/m^3 for 44 elements that might be captured on typical filter materials used in fine particle or dichotomous sampling devices. With the sample as a thin layer of particles matrix effects substantially disappear so the method is applicable to elemental analysis of a broad range of particulate material. The method applies to energy dispersive XRF analysis of ambient aerosols sampled with fine particle (<2.5 μm) samplers, dichotomous and VAPS (versatile air pollution sampler) samplers with a 10 μm upper cut point and PM_{10} samples.

1.8 X-ray fluorescence spectroscopy should be used by a scientist with a minimum training of 5 years in energy dispersive X-ray fluorescence analysis of atmospheric aerosols and its associated data processing. The scientist should also have an advanced degree in the physical sciences.

2. Applicable Documents

2.1 ASTM Documents

- D4096 Application of High Volume Sample Method For Collection and Mass Determination of Airborne Particulate Matter.
- D1356 Definition of Terms Related to Atmospheric Sampling and Analysis.
- D1357 Practice For Planning the Sampling of the Ambient Atmosphere.

2.2 U.S. Government Documents

- U.S. Environmental Protection Agency, *Quality Assurance Handbook for Air Pollution Measurement Systems, Volume I: A Field Guide for Environmental Quality Assurance*, EPA-600/R-94/038a.
- U.S. Environmental Protection Agency, *Quality Assurance Handbook for Air Pollution Measurement Systems, Volume II: Ambient Air Specific Methods (Interim Edition)*, EPA-600/R-94/038b.

- "Reference Method for the Determination of Particulate Matter in the Atmosphere," *Code of Federal Regulations*, 40 *CFR* 50, Appendix B.
- "Reference Method for the Determination of Particulate Matter in the Atmosphere (PM_{10} Method)," *Code of Federal Regulations*, 40 *CFR* 50, Appendix J.
- "1978 Reference Method for the Determination of Lead in Suspended Particulate Matter Collected From Ambient Air." *Federal Register* 43 (194):46262-3.
- *Test Methods for Evaluating Solid Waste, Method 9022*, EPA Laboratory Manual, Vol. 1-A, SW-846.

2.3 Other Documents

- Kevex XRF TOOLBOX II Reference Manual
- Kevex 771-EDX Spectrometer User's Guide and Tutorial

3. Summary of Method

The method described is x-ray fluorescence applied to PM_{10}, fine (<2.5 μm) and coarse (2.5-10 μm) aerosols particles captured on membrane filters for research purposes in source apportionment. The samplers which collect these particles are designed to separate particles on their inertial flow characteristics producing size ranges which simplify x-ray analysis. The instrument is a commercially available Kevex EDX-771 energy dispersive x-ray spectrometer which utilizes secondary excitation from selectable targets or fluorescers and is calibrated with thin metal foils and salts for 44 chemical elements. Spectra are acquired by menu-driven procedures and stored for off-line processing. Spectral deconvolution is accomplished by a least squares algorithm which fits stored pure element library spectra and background to the sample spectrum under analysis. X-ray attenuation corrections are tailored to the fine particle layer and the discrete coarse particle fraction. Spectral interferences are corrected by a subtractive coefficient determined during calibration. The detection limits are determined by propagation of errors in which the magnitude of error from all measured quantities is calculated or estimated as appropriate. Data are reported in ng/m^3 for all samples. Comprehensive quality control measures are taken to provide data on a broad range of parameters, excitation conditions and elements.

4. Significance

4.1 The area of toxic air pollutants has been the subject of interest and concern for many years. Recently the use of receptor models has resolved the elemental composition of atmospheric aerosol into components related to emission sources. The assessment of human health impacts resulting in major decisions on control actions by federal, state and local governments are based on these data.

4.2 Inhalable ambient air particulate matter (<10 μm) can be collected on Teflon® filters by sampling with a dichotomous sampler and analyzed for specific metals by X-ray fluorescence. The dichotomous sampler collects particles in two size ranges - fine (<2.5 μm) and coarse (2.5-10 μm). The trace element concentrations of each fraction are determined using the nondestructive energy dispersive X-ray fluorescence spectrometer.

4.3 The detectability and sensitivity of specific elements may vary from instrument to instrument depending upon X-ray generator frequency, multichannel analyzer sensitivity, sample interferences, etc.

5. Definitions

[Note: Definitions used in this document are consistent with ASTM Methods. All pertinent abbreviations and symbols are defined within this document at point of use.]

5.1 Accuracy. The agreement between an experimentally determined value and the accepted reference value.

5.2 Attenuation. Reduction of amplitude or change in wave form due to energy dissipation or distance with time.

5.3 Calibration. The process of comparing a standard or instrument with one of greater accuracy (smaller uncertainty) for the purpose of obtaining quantitative estimates of the actual values of the standard being calibrated, the deviation of the actual value from a nominal value, or the difference between the value indicated by an instrument and the actual value.

5.4 10 μm Dichotomous Sampler. An inertial sizing device that collects suspended inhalable particles (< 10 μm) and separates them into coarse (2.5-10 μm) and fine (<2.5 μm) particle-size fractions.

5.5 Emissions. The total of substances discharged into the air from a stack, vent, or other discrete source.

5.6 Filter. A porous medium for collecting particulate matter.

5.7 Fluorescent X-Rays (Fluorescent Analysis). Characteristic X-rays excited by radiation of wavelength shorter than the corresponding absorption edge.

5.8 Inhalable Particles. Particles with aerodynamic diameters of < 10 μm which are capable of being inhaled into the human lung.

5.9 Interference. An undesired positive or negative output caused by a substance other than the one being measured.

5.10 Precision. The degree of mutual agreement between individual measurements, namely repeatability and reproducibility.

5.11 Standard. A concept that has been established by authority, custom, or agreement to serve as a model or rule in the measurement of quantity or the establishment of a practice or procedure.

5.12 Traceability to NBS. A documented procedure by which a standard is related to a more reliable standard verified by the National Institute of Standards Technology (NIST).

5.13 Uncertainty. An allowance assigned to a measured value to take into account two major components of error: (1) the systematic error, and (2) the random error attributed to the imprecision of the measurement process.

5.14 Chi-square. A statistic which is a function of the sum of squares of the differences of the fitted and measured spectrum.

5.15 Fluorescer. A secondary target excited by the x-ray source and in turn excites the sample.

5.16 FWHM. Full width at half maximum, a measure of spectral resolution.

5.17 NIST. National Institute of Standards and Technology.

5.18 Shape. The actual shape of a background corrected pulse height spectrum for an element.

5.19 SRMs. Standard reference materials.

5.20 Teflo®. Trade name of a Teflon filter.

5.21 Unknown. A sample submitted for analysis whose elemental concentration is not known.

5.22 XRF. X-ray fluorescence.

6. Description of Spectrometer

The x-ray analyzer is a Kevex EDX-771 energy dispersive spectrometer with a 200 watt rhodium target tube as an excitation source. The machine has multiple modes of excitation including direct, filtered direct, and secondary which utilizes up to 7 targets or fluorescers. To minimize radiation damage to delicate aerosol samples only the secondary mode is used. Table 1 provides a listing of the fluorescers and the elements which they excite associated with energy dispersive spectrometers. Analysis atmospheres are selectable with choices of helium, vacuum or air; helium is used for all targets except Gd where air is employed because it gives a lower background. The detector is cryogenically cooled lithium-drifted silicon with a 5 μm Be window and a resolution of 158 eV at Fe K_α and comes with two manually changeable collimators. A 16 position rotating wheel accommodates the samples and provides sample changing.

The machine is operated by procedure files (or programs) written in Kevex's proprietary Job Control Language (JCL) which runs in a Windows 3.1 environment and provides setting of the analytical conditions and data acquisition. Using the JCL language, procedures have been written in-house to perform all the functions necessary to acquire spectra and to assign to them file names in a structured manner to facilitate future spectral processing. These procedures are invoked in menu form.

7. Caveats

7.1 The type of samplers mentioned in Section 1.7 must be operated in accordance with Inorganic Compendium Method IO-2.2 Sampling for Suspended Particulate Matter in Ambient Air Using a Dichotomous Sampler, or severe errors in x-ray analysis may occur. For example, errors in flow rate will not only give erroneous volumes but will cause a more serious condition of altering the cut points upon which the coarse particle x-ray attenuations are based. If samples are intended for x-ray analysis then the sampling protocol must conform to the constraints inherent within this method. Furthermore, the type of filter on which the sample is collected is very important. In general, thin membrane filters (Teflo® and Nuclepore®) are required so that the background is low and penetration of particles into the matrix of the filter is small. Thick depth filters such as quartz or glass fiber not only have high background but also allow particles to penetrate into the matrix of the filter - a condition which the spectral processing program cannot accommodate.

7.2 Some internal contaminations consisting of Sn, Ni, Cu and Fe are present which sometimes appear in blanks. Routine analysis of blanks with samples will give the magnitude of the correction necessary to compensate for this.

7.3 In general the elements analyzed by the Gd fluorescer have higher detection limits than the other fluorescers (see Table 2). The reason for this is due to limitations in the upper voltage limit of the x-ray tube power supply and the use of rhodium instead of a heavier element such as tungsten as a target material for the x-ray tube. As a secondary consequence of this, there are also higher detection limits for many of the elements below chromium because they overlap the elements analyzed by Gd.

7.4 An inherent problem with a helium atmosphere is the diffusion of He through the detector window causing detector degradation and necessitating replacement. A lifetime of 3 to 4 years is expected.

7.5 Due to an x-ray leak around the anode area of the x-ray tube the head must be shielded with additional lead cladding to prevent unwanted excitation of internal parts. This leak posed no threat to personnel but caused high background when operating at the maximum voltage. The additional shielding proved very effective at improving detection limits.

7.6 Experience with wavelength dispersive spectrometers (WDXRF) has shown good agreement with energy dispersive instruments (EDXRF) over a broad range of elements. In spite of this agreement and the simpler spectral processing requirements of wavelength machines the preference remains with energy dispersive equipment for a variety of reasons. The very low power tubes in EDXRF machines leaves the sample intact and unaffected whereas in WDXRF the high power excitation embrittles the filter itself after 15 - 30 min exposure raising the possibility of altering particle morphology. This is a concern if electron microscopy is considered. Also, the vacuum environment, necessary for WDXRF, causes loss of some volatile materials.

8. Sample Preparation

8.1 Sample preparation begins with the correct operation of the samplers employed. Inorganic Compendium Method IO-2.2, Sampling for Suspended Particulate Matter in Ambient Air Using a Dichotomous Sampler, covering the option of the samplers in the field and subsequent collection of ambient air particles on 37-mm Teflon® filter for XRF analysis. One of the greatest advantages of analyzing aerosols by XRF is that the sample can, in theory, be collected in a manner most advantageous to XRF by sampling for a duration that produces an ideal mass loading on the filter. An approximate maximum target mass is about 100 $\mu g/cm^2$ although much less is often collected in many environments.

8.2 The types of filters used for aerosol sampling are 37-mm or 47-mm Teflo® with a pore size of 2 microns and, if electron microscopy is planned for the coarse fraction, then a 0.6 micron pore size Nuclepore® filter is used. The sample should be collected on the side of the Teflo® filter with the supporting ring to maintain the proper distance between the sample and detector during analysis. A properly collected sample will be a uniform deposit over the entire collection area of at least 25mm in diameter. Samples which are not uniformly deposited over the whole collection area are not quantitatively analyzable.

8.3 All filter samples received for analysis are removed with tweezers from their container and are checked for any invalidating conditions such as holes, tears, or a non-uniform deposit which would prevent quantitative analysis. If such a condition is found the sample is noted as invalid on the XRF data entry form; data from such samples are not reported. Teflo® filters are easily handled because of the supporting ring, however, Nuclepore® filters must have a supporting ring applied to them (after gravimetric assay) to help maintain their flatness and to securely hold them in the frame. The sample is then placed in a custom-designed commercially available two-part sample frame which snaps together holding the filter securely in place.

9. Spectral Acquisition and Processing

9.1 Spectra are acquired in sets of 15 samples each. Up to 7 spectra are acquired for each sample depending on how many secondary excitation targets are selected. Utilizing all seven fluorescers requires approximately 4 hours machine time for 44 elements analyzed plus atmospheric argon.

9.2 Elemental intensities are determined by spectral deconvolution with a least squares algorithm which utilizes experimentally determined elemental shape functions instead of the mathematical Gaussian function. This approach has been successfully implemented for many years on an earlier machine and is described in Section 15, Citation 10. Since the spectral shape is not a pure Gaussian the experimental shapes are a more realistic representation of a spectrum. In addition to this library of elemental shape spectra there is also a background shape spectrum for each of the types of filters. It is assumed that the background on an unknown sample is due to the filter and not to the sample. (This is one of the reasons for avoiding heavily loaded filters.) The least squares algorithm synthesizes the spectrum of the sample under analysis by taking a linear combination of all the elemental shapes spectra and the background

shape spectrum. The coefficients on the linear combination of elemental shapes and background spectra are scaling factors determined by minimizing chi-square thus producing the best fit possible by least square minimization. Values of the chi-square statistic are calculated for each sample and fluorescer to give an indication of the quality of the fit.

9.3 X-ray attenuation corrections are performed as described in Section 15, Criterion 10 and are briefly described here. The mass absorption coefficients for the layer of fine particles is based on a typical composition of ambient aerosol particles so the actual x-ray attenuations on a given sample are simply a function of the mass loading. Coarse particle attenuations are more complex in that they are based on x-ray attenuation by spherical particles with compositions of common crustal minerals with various size distributions. An average attenuation and uncertainty for each coarse particle element is based on this broad range of crustal minerals and is therefore a one-time calculation giving an attenuation factor useable for all subsequent coarse (2.5-10 μm) particle analyses. This treatment assumes low coarse particle loading so that the particles do not shadow one another - yet another reason for assuring that the sample mass loading is not too high. Attenuation corrections on PM_{10} particles are deduced from elemental concentration data from samples taken with collocated PM_{10} and dichotomous samplers.

9.4 The need for interference corrections arises from overlaps that are not deconvoluted by the least squares algorithm. This can best be illustrated by an example: Barium and titanium are analyzed by the gadolinium and iron fluorescers, respectively. The barium L x-rays overlap with the K x-rays of titanium and require an interference correction because the elements analyzed by gadolinium do not include titanium. The interference correction technique is described by Gilfrich in Section 15, Criterion 29. The interference coefficient, determined during calibration, represents the fraction of the concentration of an affecting element (barium in the present example) which must be subtracted from the concentration of the affected element concentration (titanium) to compensate for the interference.

9.5 When samples are collected by the dichotomous or other samplers using virtual impaction, an additional correction must be employed because these type of samplers do not perfectly separate the fine and coarse particles. Due to virtual impaction requirements, about 10% of the fine particle mass is deposited on the coarse filter. Therefore, the attenuation corrections used for the particles on the coarse filter "over-correct" the attenuation because of these residual fines on the coarse filter. These effects are compensated for by the flow fraction correction.

10. Data Reporting

The two most important data output files are an ASCII file which contains a recapitulation of the field data and the final sample concentrations in ng/m^3 and a Lotus file with only the sample data. An example printout of a fine/coarse sample pair is shown in Table 3.

The uncertainty reported with each concentration is a 1σ (68% confidence level) uncertainty and is determined by propagating the errors given in Section 12. Elements with concentrations below 3 times the uncertainty are flagged with an asterisk (*) on the printed record. If the true elemental concentration is zero then the fitting procedure implies that negative and positive results are equally probable. Therefore, negative numbers may be reported.

11. Calibration

11.1 Calibration is performed only when a change in fluorescers or x-ray tubes or detector is made or a serious malfunction occurs requiring significant repairs. Calibration establishes the elemental sensitivity factors and the magnitude of the interference or overlap coefficients. It takes approximately 2 weeks to complete a calibration.

11.2 Thin film standards are used for calibration because they most closely resemble the layer of particles on a filter. There are two types of calibration standards in use. One type consists of thin films deposited on Nuclepore substrates (Micromatter Co., Eastsound, WA). These standards are available for almost all the elements analyzed ranging in atomic number from 11 (Na) to 82 (Pb) with deposit masses gravimetrically determined to $\pm$ 5%. Another type consists of polymer films that contain known amounts of two elements in the form of organo-metallic compounds dissolved in a polymer and are not commercially available but their preparation is described in Section 15, Citation 9. These standards have been prepared for elements with atomic numbers above 21 (titanium and heavier). The same set of standards is used every time the spectrometer is calibrated. The standards are sufficiently durable to last many years, however occasionally one must be replaced due to accidents in handling. Approximately 200 calibration standards for 44 elements are in use (see Table 4.) and the acquisition of their spectra requires several days.

11.3 The background files which are used for background fitting are created at calibration time. Thirty clean Teflo® and Nuclepore® blanks are kept sealed in a plastic bag and are used exclusively for background measurement. After acquiring spectra for all 7 fluorescers the spectra are added together to produce a single spectrum for each fluorescer. Options are available to omit a spectrum from the sum if one shows a contamination. It is these summed spectra that are fitted to the background during spectral processing.

11.4 The shapes standards are thin film standards consisting of ultra pure elemental materials for the purpose of determining the physical shape of the pulse height spectrum. For this purpose it is not necessary for the concentration of the standard to be known - only that it be pure. A slight contaminant in the region of interest in a shape standard can have serious effect on the ability of the least squares fitting algorithm to fit the shapes to the unknown. For this reason the Se and elemental As standards, whose compounds are volatile, are kept in separate plastic bags in a freezer to prevent contamination of other standards; the Au standard, which will slowly amalgamate with atmospheric Hg, is kept in a desiccator. The shape standards are acquired for sufficiently long times to provide a large number of counts in the peaks of interest. It is these elemental shapes spectra that are fitted to the peaks in an unknown sample during spectral processing.

11.5 The spectra from the calibration standards are deconvoluted to get elemental intensities as described in Section 9.2. Using these intensities and the elemental concentration in the standards the sensitivities are determined by a polynomial fit using a model based on the fundamentals of the x-ray physics process as well as measurements on the calibration standards. This approach allows the calculation of sensitivities for elements for which there are poor or no standards such as volatile ones like Se and elemental As as well as improving on elements with good standards.

11.6 The overlap coefficients are determined during calibration and represent the extent of interference that exists between overlapping spectral peaks. During calibration an affecting element (barium, to continue with the example of Section 9.4) is measured both at the analyte line peak for barium and at the titanium peak. The coefficient is expressed as the ratio of the concentration of the affected element (titanium) to the concentration of the affecting element (barium). All elements requiring overlap coefficient determination are calculated in this manner.

12. Detection Limits

The detection limits are determined by propagation of errors. The sources of random error which are considered are: calibration uncertainty (± 5%); long term system stability (± 5%); peak and background counting statistics; uncertainty in attenuation corrections; uncertainty in overlap corrections; uncertainty in flow rate; and uncertainty in coarse fraction due to flow fraction correction (paired samples only). Table 2 outlines typical 1σ (68% confidence level) detection limits on a Teflo® blank for fine particles and a Nuclepore® blank for coarse (2.5 μm-10 μm) particles. These detection limits are defined in terms of the uncertainty in the blank. This ignores the effect of other elements which generally is small except for the light elements (potassium and lower) where overlapping spectral lines will increase the detection limit.

[Note: The difference in the detection limits between the two filters in Table 2 is due more to the difference in sensitivity to fine and coarse particles and less to the difference in filter material.]

Higher confidence levels may be chosen for the detection limits by multiplying the 1σ limits by 2 for a 2σ (or 95% level) or by 3 for 3σ (or 99.7% level). To convert the detection limits to more useful units one can use the typical deposit areas for 37mm and 47mm diameter filters of 6.5 cm^2 and 12.0 cm^2 respectively.

13. Quality Control

13.1 A comprehensive quality control program is in effect consisting of many measured parameters covering all measurement conditions and automatically produces control charts for all such measurements. All plotted data are normalized to the mean to give a rapid assessment of relative change.

13.2 Run-time quality control gives an indication of instrument performance at the time of data acquisition by measurements on stable qualitative standards. The parameters which are measured and their significance are: peak areas (monitors change in sensitivity), background areas (monitors contamination or background changes), centroid (monitors gain and zero adjustment to insure that spectra are assigned the correct channel), and FWHM, (monitors degradation of the detector resolution). These four parameters are measured for elements ranging from sodium to lead and include atmospheric argon. An example of plots of run-time QC data and illustrated in Figures 1 through 4 and Table 5, for the target and tolerance values for the parameters measured.

13.3 In addition to the run-time quality control procedure the analysis results of Standard Reference Materials SRM1833 and SRM1832 are included in the data reports. These results provide an overall

check of the spectral processing program for the elements which are certified in the standards. The sole purpose of the SRMs is to provide a quality control measure; the standards are not used for calibration. Typical results of these SRMs are documented in Tables 6 and 7, and plotted in Figure 5.

13.4 The run-time quality control procedures serve as an indicator of possible emerging problems by flagging deviations greater than 3 tolerance units as defined for each element in Table 5. Persistently increasing trends are investigated to determine their cause(s) before they impact the results of SRM analyses.

13.5 The acceptance criteria of results for the elements certified in the SRMs is that the uncertainty intervals for the analytical results and those of the certified values should overlap each other. If any element fails this then the run of unknowns is repeated. Repeated failures indicate the need for recalibration.

13.6 A value for chi-square is calculated and reported with the data to indicate the quality of the fit. Chi-square values that are much larger than 1.0 indicate a problem in the fitting procedure. Changes in detector resolution or gain in the amplifier produce large values for chi-square; however such changes would be detected by the run-time quality control procedure. Also, large chi-square values can accompany results for heavily loaded filters even though the relative errors are typical. In addition, elements analyzed by the titanium and the iron fluorescers may experience large chi-square values due to interferences from overlapping elements. Chi-square is a more useful measure of goodness-of-fit for the other fluorescers for this reason.

13.7 To acquire more information about fitting problems the fitted spectra can be viewed on the screen or a hard copy printed. Such plots can be compared to the unknown spectra, background spectra, or to the library shape standards to help elucidate the suspected problem. Various statistics such as the correlation coefficient can be calculated on the fitted and measured spectra as a additional measure of the goodness-of-fit. Fitted spectrum superposed on its measured spectrum along with the associated statistics is illustrated in Figure 6.

14. Precision and Accuracy

Precision varies with the element and concentration. At high concentrations (greater than 1 $\mu g/cm^2$) a precision of 7.1% can be expected for elements analyzed by one fluorescer and 5.0% can be expected for those analyzed by two. Refer to Table 1 for a listing of the elements and the fluorescers which analyze them. Based upon the analysis of NIST SRMs the accuracy is $\pm$ 10%.

15. References

1. Arinc, F., Wielopolski, L., and Gardner, R. P., *The Linear Least-Squares Analysis of X-Ray Fluorescence Spectra of Aerosol Samples using Pure Element Library Standards and Photon Excitation,* X-ray Fluorescence Analysis of Environmental Samples, ed. T. G. Dzubay, Ann Arbor Science, Ann Arbor, MI p.227.

2. Bevington, P.R., *Data Reduction and Error Analysis for the Physical Sciences*, McGrawHill Book Co., New York, N.Y.

3. Billiet, J., Dams, R., and Hoste, J., X-Ray Spectrum, 9:206-211, 1980.

4. Birks, L.S., and Gilfrich, J.V., "X-Ray Spectrometry," *Anal. Chem.*, 48:273R-28R, 1976.

5. Dzubay, T. G., *Analysis of Aerosol Samples by X-Ray Fluorescence,* Env. Science Research Lab, U. S. Environmental Protection Agency, Research Triangle Park, NC, 27711, April 1986.

6. Dzubay, T. G., "Chemical Elements Balance Method Applied to Dichotomous Sampler Data," *Annals New York Academy of Sciences*, 1980.

7. Dzubay, T. G., *Development and Evaluation of Composite Receptor Methods, EPA Project Summary*, EPA-600/3-88-026, U. S. Environmental Protection Agency, Research Triangle Park, NC, 27711, September 1988.

8. Dzubay, T. G., *Quality Assurance Narrative for SARB XRF Facility,* Env. Science Research Lab, U. S. Environmental Protection Agency, Research Triangle Park, NC, 27711, March 1989.

9. Dzubay, T. G., et al., "Polymer Film Standards for X-Ray Fluorescence Spectrometers," *J. Trace and Microprobe Techniques*, 5(4):327-341, 1987-88.

10. Dzubay, T. G., Drane, E. A., Rickel, D. G., and Courtney, W. J., "Computer Code for Analyzing X-Ray Fluorescence Spectra of Airborne particulate Matter," *Advances in X-Ray Analysis*, Vol. 23.

11. Dzubay, T. G., Lamothe, P. J., and Yasuda, H., *Advances in X-Ray Analysis*, ed. H. F. McMurdie, C.S. Barrett, J. B. Newkirk, and C. O. Ruud, Plenum, New York, N.Y. 20:411-421, 1977.

12. Dzubay, T. G., Morosoff, N., Whitaker, G. L., et al., "Evaluation of Polymer Films as Standards for X-Ray Fluorescence Spectrometers," Presented at Symposium on Electron Microscopy and X-Ray Applications to Environmental and Occupational Health Analysis.

13. Dzubay, T. G., and Nelson, R. O., *Self Absorption Corrections for X-Ray Fluorescence Analysis of Aerosols,* Advances in X-Ray Analysis, ed. W. L. Pickles, et al., Plenum Publishing Corp., New York, N.Y. 18:619, 1975.

14. Dzubay, T. G., and Rickel, D. G., *X-Ray Fluorescence Analysis of Filter-Collected Aerosol Particles, Electron Microscopy and X-Ray Applications,* Ann Arbor Science, 1978.

15. Dzubay, T. G., Stevens, R. K., Gordon, G. E., Olmez, I., Sheffield, A. E., and Courtney, W. J., "A Composite Receptor Method Applied to Philadelphia Aerosol," *Environmental Science & Technology*, 22:46, January 1988.

16. Dzubay, T. G., Stevens, R. K., Gordon, G. E., Olmez, I., Sheffield, A. E., and Courtney, W. J., "A Composite Receptor Method Applied to Philadelphia Aerosol," *Environmental Science & Technology*, 22:46, January 1988.

17. Giauque, R. D., Goulding, F. S., Jaklevic, J. M., and Pehl, R. H., "Trace Element Determination with Semiconductor Detector X-Ray Spectrometers," *Anal. Chem.*, 45:671, 1973.

18. Goulding, F. S., and Jaklevic, J. M., *Fabrication of Monitoring System for Determining Mass and Composition of Aerosol as a Function of Time*, EPA-650/2-75-045, U. S. Environmental Protection Agency, Research Triangle Park, NC 27711, 1975.

19. *Inhalable Particulate Network Operations and Quality Assurance Manual,* Office of Research and Development, Env. Monitoring Systems Lab, U. S. Environmental Protection Agency, Research Triangle Park, NC 27711.

20. Jaklevic, J. M., Landis, D. A., and Goulding, F. S., "Energy Dispersive X-Ray Fluorescence Spectrometry Using Pulsed X-Ray Excitation, *Advances in X-Ray Analysis*, 19:253-265, 1976.

21. Jenkins, R., and deVries, J. L., *Practical X-Ray Spectroscopy*, Springer-Verlag, New York, NY, 1967.

22. Loo, B. W., Gatti, R. C., Liu, B. Y. H., Chong-Soong, K., and Dzubay, T. G., "Absorption Corrections for Submicron Sulfur Collected in Filters," X-Ray Fluorescence Analysis of Environmental Samples, Ann Arbor Science, Ann Arbor, MI p. 187, 1977.

23. NBS Standard Reference materials Catalog 1986-87, National Bureau of Standards Publ. 260, U. S. Department of Commerce, Washington, DC p. 64, June 1986.

24. Rhodes, J. R., *X-Ray Spectrom.*, 6:171-173, 1977.

25. Wagman, J., Bennett, R. L., and Knapp, K. T., "Simultaneous Multiwavelength Spectrometer for Rapid Elemental Analysis of Particulate Pollutants," X-Ray Fluorescence Analysis of Environmental Samples, ed. T. G. Dzubay, Ann Arbor Science Publishers, Inc. Ann Arbor, MI, pp, 35-55, 1977.

26. *Volume II: Protocols for Environmental Sampling and Analysis,* Particle Total Exposure Assessment Methodology (P-Team): Pre-Pilot Study, EPA 68-02-4544, U. S. Environmental Protection Agency, Research Triangle Park, NC 27709, January 27, 1989.

27. Jaklevic, et al., *X-ray Fluorescence Analysis of Environmental Samples*, ed. T. G. Dzubay, Ann Arbor Science, Ann Arbor, MI, p. 63.

28. Cooper, J. A., Valdovinos, L. M., Sherman, J. R., Pollard, W. L., Sarver, R. H., and Weilder, J. K., "Quantitative Analysis of Aluminum and Silicon in Air Particulate Deposits on Teflon® Membrane Filters by X-ray Fluorescence Analysis," NEA, Inc., Beaverton, OR, July 15, 1987.

29. Gilfrich, et al., *X-ray Fluorescence Analysis of Environmental Samples*, ed. T. G. Dzubay, Ann Arbor Science, Ann Arbor, MI, p. 283.

TABLE 1. FLUORESCER USAGE

Element	Fluorescer						
	Al	Ti	Fe	Ge	Ag	Zr	Gd
Na	x						
Mg	x						
Al	x						
Si	x						
P	x	x					
S	x	x					
Cl	x	x					
Ar	x	x					
K	x	x					
Ca	x	x					
Sc	x	x					
Ti			x	x			
V			x	x			
Cr			x	x			
Mn				x		x	
Fe				x		x	
Co				x		x	
Ni				x		x	
Cu				x		x	
Zn						x	
Ga						x	
Ge						x	
As						x	
Se						x	
Br						x	
Rb					x	x	
Sr					x		x
Y					x		
Zr					x		x
Mo					x		x
Rh							x
Pd							x
Ag							x
Cd							x
Sn							x
Sb							x
Te							x
I							x
Cs							x
Ba							x
La							x
W					x	x	
Au					x	x	
Hg					x	x	
Pb					x	x	

[Note: The 'x' marks the fluorescers that analyze each element.]

TABLE 2. DETECTION LIMITS (1σ) FOR TEFLO AND NUCLEPORE BLANK FILTERS

Teflo® - fine element Detection Limit DL (ng/cm2)		Nuclepore® - coarse element Detection Limit (DL) (ng/cm^2)	
NA	5.3	NA	17.4
MG	3.2	MG	7.9
AL	17.6	AL	46.7
SI	8.0	SI	21.2
P	2.6	P	4.1
S	2.6	S	6.9
CL	4.8	CL	5.6
K	6.3	K	5.6
CA	9.0	CA	8.7
SC	1.5	SC	1.3
TI	16.9	TI	18.7
V	5.3	V	5.5
CR	3.0	CR	3.0
MN	.8	MN	.8
FE	.7	FE	1.0
CO	.4	CO	.4
NI	.6	NI	.7
CU	.7	CU	.8
ZN	1.0	ZN	1.1
GA	1.6	GA	1.5
GE	1.1	GE	1.0
AS	.8	AS	.9
SE	.7	SE	.6
BR	.6	BR	.7
RB	.7	RB	.7
SR	1.1	SR	.9
Y	1.2	Y	1.1
ZR	1.2	ZR	1.1
MO	1.6	MO	1.5
RH	25.9	RH	26.5
PD	22.9	PD	18.7
AG	20.2	AG	20.3
CD	22.0	CD	19.2
SN	30.5	SN	31.5
SB	31.4	SB	26.7
TE	26.3	TE	27.6
I	35.5	I	34.4
CS	48.9	CS	50.9
BA	51.8	BA	58.3
LA	70.6	LA	68.9
W	3.4	W	3.3
AU	1.7	AU	1.5
HG	1.5	HG	1.4
PB	1.5	PB	1.5

TABLE 3. DATA REPORT FORMAT FOR A FINE/COARSE PAIRED SAMPLE

KEVEX SUMMARY: ADOBE FLATS URBAN PARTICULATE STUDY

SITE = ADB
DURATION (MIN) = 714.0
FLOW FRAC = .0869
XRF ID = 999906
SAMPLE ID = T0033

SAMPLE DATE = 3/20/92 AND 1900 HOURS
FLOW (L/MIN) = 37.105 +- .500
XRF ID = 999956
SAMPLE ID = NU0033

	FINE, NG/M^3				COARSE, NG/M^3		
MASS	77912.	+-	1962.	MASS	11347.	+-	812.
*NA	211.9	+-	71.4	*NA	53.3	+-	27.1
MG	564.6	+-	89.4	MG	443.9	+-	40.8
*AL	162.2	+-	74.1	AL	539.9	+-	173.8
SI	213.4	+-	40.4	SI	909.5	+-	232.7
* P	12.1	+-	18.5	* P	-5.5	+-	11.3
S	2653.4	+-	183.7	S	285.7	+-	84.9
CL	1164.4	+-	79.3	*CL	34.8	+-	24.6
K	193.6	+-	13.8	K	63.5	+-	8.9
CA	43.4	+-	5.6	CA	181.7	+-	13.9
*SC	3.6	+-	4.1	*SC	-1.3	+-	2.2
*TI	17.6	+-	6.6	TI	54.7	+-	9.6
* V	4.6	+-	2.3	* V	3.2	+-	1.7
*CR	2.0	+-	1.0	CR	9.8	+-	1.6
MN	10.0	+-	1.4	MN	10.1	+-	1.3
FE	243.7	+-	21.9	FE	783.5	+-	78.2
*CO	2.8	+-	1.8	*CO	4.8	+-	1.7
NI	3.8	+-	1.2	*NI	.3	+-	.6
CU	14.3	+-	1.9	CU	8.8	+-	1.3
ZN	167.5	+-	14.9	ZN	27.6	+-	4.9
*GA	2.4	+-	1.0	*GA	-.0	+-	.4
*GE	3.3	+-	1.3	*GE	.0	+-	.6
AS	24.7	+-	3.6	*AS	1.8	+-	1.2
SE	4.7	+-	.8	*SE	.7	+-	.4
BR	29.0	+-	2.8	BR	7.9	+-	1.1
*RB	1.7	+-	.8	*RB	1.0	+-	.4
SR	2.9	+-	.9	SR	2.2	+-	.5
* Y	12.4	+-	6.1	* Y	3.9	+-	2.9
*ZR	2.9	+-	4.8	*ZR	4.3	+-	2.6
*MO	7.3	+-	4.8	*MO	-3.2	+-	2.2
*RH	.0	+-	3.2	*RH	-1.2	+-	1.6
*PD	-3.6	+-	3.1	*PD	-1.0	+-	1.7
*AG	-6.4	+-	3.4	*AG	1.2	+-	1.9
*CD	8.5	+-	4.5	*CD	-.7	+-	2.2
SN	54.3	+-	9.4	*SN	2.3	+-	3.9
*SB	-1.6	+-	6.4	*SB	-.6	+-	3.3
*TE	2.5	+-	7.5	*TE	-7.2	+-	3.8
* I	25.0	+-	9.6	* I	2.4	+-	4.7
*CS	-4.0	+-	11.2	*CS	12.4	+-	5.9
*BA	-7.7	+-	13.7	BA	25.1	+-	7.4
*LA	-4.8	+-	34.5	*LA	22.6	+-	17.9
* W	-1.1	+-	2.6	* W	1.5	+-	1.3
*AU	-.9	+-	1.8	*AU	.2	+-	.9
*HG	-.4	+-	1.9	*HG	1.5	+-	1.0
PB	221.6	+-	19.7	PB	46.0	+-	6.2

* INDICATES THAT THE CONCENTRATION IS BELOW 3 TIMES THE UNCERTAINTY.
XRF DATE= 04/29/1992 16:35 RBK (F): 04/29/1992 20:35 RBK (C)
SPECTRAL ANALYSIS DATE= 5/20/1992

TABLE 4. CALIBRATION STANDARDS AND CONCENTRATIONS

Standard ID	Element	$\mu g/cm^2$	Standard ID	Element	$\mu g/cm^2$	Standard ID	Element	$\mu g/cm^2$	Standard ID	Element	$\mu g/cm^2$
CaF237	F	18.00	CuS1124	S	31.90	Cr 85	Cr	85.00	RbNO311	Rb	69.00
CaF2 29	F	14.10	CuS58.6	S	16.50	Cr 84	Cr	84.00	RbNO322	Rb	12.90
CaF2 90	F	43.80	CuS57.6	S	13.90	Cr 75	Cr	75.00	RbNO3 a	Rb	24.90
CaF2 91	F	44.30	CuS58.2	S	14.00	Cr 74	Cr	74.00	RbNO3 b	Rb	24.90
CaF2102	F	49.60	NaCl 57	Cl	34.60	Cr 122	Cr	122.00	RbNO3 c	Rb	24.90
CaF2 66	F	32.10	NaCl 87	Cl	52.80	CrCu32a	Cr	9.19	SrF2 57	Sr	39.80
CaF2 28	F	13.60	NaCl446	Cl	27.10	CrCu26g	Cr	8.14	SbSr29z	Sr	4.97
CaF2 33	F	16.10	NaCl715	Cl	43.40	MnZn24b	Mn	8.57	SrF2 50	Sr	34.90
CaF2 39	F	19.00	NaCl497	Cl	30.20	Mn 57	Mn	57.00	SbSr31y	Sr	5.14
CaF2 54	F	26.30	NaCl501	Cl	30.40	Mn 183	Mn	183.00	SrF2137	Sr	95.60
CaF2291	F	14.10	NaCl 51	Cl	31.00	MnZn27x	Mn	9.10	SrF2184	Sr	12.80
CaF2 30	F	14.60	NaCl512	Cl	31.10	Mn 43	Mn	43.00	SrF2 92	Sr	64.20
CaF2 52	F	25.30	NaCl519	Cl	31.50	Mn 46.9	Mn	46.90	SrF2103	Sr	71.80
CaF2 48	F	23.40	KCl 45	Cl	21.40	Mn 44.5	Mn	44.50	YF3 46	Y	28.00
CaF2 45	F	21.90	KCl53.3	Cl	25.40	Mn 46.6	Mn	46.60	ZrCd24c	Zr	9.85
CaF2 36	F	17.50	KCl 70	Cl	33.30	Mn 43.7	Mn	43.70	ZrCd20w	Zr	10.77
CaF2134	F	65.20	KCl 49	Cl	23.30	Mn 69	Mn	69.00	MoO3145	Mo	96.70
CaF2110	F	53.50	KCl48.7	Cl	23.20	FePb37y	Fe	7.72	MoO3106	Mo	70.70
NaCl 57	Na	22.40	KCl47.9	Cl	22.80	Fe 107	Fe	107.00	MoO3110	Mo	73.30
NaCl 87	Na	34.20	KCl 48	Cl	22.80	Fe 127	Fe	127.00	MoO3 59	Mo	39.30
NaCl446	Na	17.60	KCl47.6	Cl	22.60	Fe 46	Fe	46.00	MoO3 54	Mo	36.00
NaCl715	Na	28.10	KCl 45	K	23.60	Fe 88	Fe	88.00	Rh 16	Rh	16.00
NaCl497	Na	19.60	KCl53.3	K	28.00	FePb38y	Fe	7.71	Pd 33	Pd	33.00
NaCl501	Na	19.70	KCl 70	K	36.70	Co 45a	Co	45.00	Pd 198	Pd	198.00
NaCl 51	Na	20.10	KCl 49	K	25.70	Co 45b	Co	45.00	Ag 35	Ag	35.00
NaCl512	Na	20.10	KCl48.7	K	25.50	RbCo29c	Co	7.43	Ag 132	Ag	132.00
NaCl519	Na	20.40	KCl47.9	K	25.10	RbCo25b	Co	7.65	Cd 83	Cd	83.00
Mg 81	Mg	81.00	KCl 48	K	25.20	Ni 54	Ni	54.00	ZrCd20w	Cd	9.15
Mg 41	Mg	41.00	KCl47.6	K	25.00	Ni 88	Ni	88.00	ZrCd24c	Cd	8.38
Mg 41.3	Mg	41.30	CaF2 37	Ca	19.00	NiV 21c	Ni	5.77	Cd 77	Cd	77.00
Mg 43	Mg	43.00	CaF2 29	Ca	14.90	Ni 101	Ni	101.00	Sn 40	Sn	40.00
Mg 43.8	Mg	43.80	CaF2 90	Ca	46.20	Cu 96	Cu	96.00	Sn 185	Sn	185.00
Mg 60.2	Mg	60.20	CaF2 91	Ca	46.70	Cu 104	Cu	104.00	Sn 97a	Sn	97.00
Al 57	Al	57.00	CaF2102	Ca	52.40	Cu 128	Cu	128.00	Sn 97b	Sn	97.00
Al 37.9	Al	37.90	CaF2 66	Ca	33.90	CrCu26g	Cu	7.65	Sn 79	Sn	79.00
Al 37.4	Al	37.40	CaF2 28	Ca	14.40	CrCu32a	Cu	8.63	Sb 194	Sb	194.00
Al 29	Al	29.00	CaF2 33	Ca	16.90	Cu 38	Cu	38.00	Sb 47	Sb	47.00
Al 43.2	Al	43.20	CaF2 39	Ca	20.00	Zn 51	Zn	51.00	Sb 147	Sb	147.00
Al 62	Al	62.00	CaF2 54	Ca	27.20	Zn 125	Zn	125.00	Sb 42	Sb	42.00
Al 75	Al	75.00	CaF2291	Ca	14.90	MnZn27x	Zn	8.46	SbSr29z	Sb	5.01
SiO 46	Si	29.30	CaF2 30	Ca	15.40	MnZn24b	Zn	7.97	SbSr31y	Sb	5.18
SiO 47	Si	29.90	CaF2 52	Ca	26.70	GaP 34	Ga	23.50	Te 53	Te	53.00
SiO 51a	Si	32.50	CaF2 48	Ca	24.60	GaP 40	Ga	27.70	KI 46	I	35.20
SiO 51b	Si	32.50	CaF2 45	Ca	23.10	GaP 70	Ga	48.50	CsBr 53	Cs	33.10
SiO 56	Si	35.70	CaF2 36	Ca	18.50	GaP 105	Ga	72.70	CsBr 54	Cs	33.70
SiO 80	Si	51.00	CaF2134	Ca	68.60	Ge 37	Ge	37.00	CsBr 51	Cs	31.90
SiO27.6	Si	17.60	CaF2110	Ca	56.50	TiGe33d	Ge	6.22	BaF2108	Ba	84.60
SiO46.1	Si	29.40	ScF3 57	Sc	25.10	TiGe29x	Ge	5.94	BaF2 48	Ba	37.60
SiO72.2	Si	46.00	Ti 39	Ti	39.00	Ge 140	Ge	140.00	BaF2 60	Ba	47.00
GaP 34	P	10.50	Ti 95	Ti	95.00	BaAs23y	As	5.60	BaF2 57	Ba	44.70
GaP 40	P	12.30	TiGe33d	Ti	2.46	BaAs36w	As	5.52	BaF2143	Ba	112.00
GaP 70	P	21.50	TiGe29x	Ti	2.36	CsBr 53	Br	19.90	BaF2114	Ba	89.40
GaP 105	P	32.30	V 45	V	45.00	CsBr 54	Br	20.30	BaAs23y	Ba	4.98

TABLE 4. (continued)

Standard ID	Element	$\mu g/cm^2$	Standard ID	Element	$\mu g/cm^2$	Standard ID	Element	$\mu g/cm^2$	Standard ID	Element	$\mu g/cm^2$
CuS1052	S	30.80	V 53	V	53.00	CsBr 51	Br	19.10	BaAs36w	Ba	4.91
CuS 48	S	13.00	NiV 21c	V	6.64	RbNO346	Rb	26.60	LaF3157	La	111.30
CuS 136	S	33.00	Cr 30	Cr	30.00	RbCo25b	Rb	7.88	LaF3 62	La	44.00
CuS39.6	S	10.20	Cr 53	Cr	53.00	RbCo29c	Rb	7.65			

TABLE 5. TARGET AND TOLERANCE VALUES FOR QC RESULTS

(TARGET VALUES)

FILE: 0:QCBEGTGT					FILE: 0:QCENDTGT				
STDEL ID	EL	AREA (cts)	CENTROID (keV)	FWHM (ev)	STD ID	EL	AREA (cts)	CENTROID (keV)	FWHM (ev)
1833	Pb	31112.12	10.5449	207.4653	1832	Cu	17548.85	8.0411	174.1389
1833	Zn	31772.52	8.6306	179.6835	1832		5303.84	6.9247	167.1478
1833	Fe	313475.41	6.3935	159.4537	1832	Mn	86202.33	5.8891	154.6347
1833	Ti	216978.09	4.5037	142.4946	1832	Ca	217562.00	3.6847	135.3520
1833	Si	69021.60	1.7322	121.7406	1832	V	99761.96	4.9443	146.1904
1833	K	220344.80	3.3069	132.4137	1832	Al	16562.45	1.4779	119.5793
BLKt	Sn	111.52	0.0000	0.0000	1832	Si	67688.42	1.7319	118.4960
BLKt	Pb	85.82	0.0000	0.0000	1832	Na	10332.21	1.0256	114.4485
BLKt	Cu	497.06	0.0000	0.0000	BLKn	Ba	183.14	0.0000	0.0000
BLKt	Sr	72.92	0.0000	0.0000	BLKn	W	241.42	0.0000	0.0000
BLKt	Ni	648.99	0.0000	0.0000	BLKn	Zn	148.48	0.0000	0.0000
BLKt	Fe	459.10	0.0000	0.0000	BLKn	Sr	83.00	0.0000	0.0000
BLKt	S	266.76	0.0000	0.0000	BLKn	Ni	654.44	0.0000	0.0000
BLKt	Al	396.30	0.0000	0.0000	BLKn	Fe	603.55	0.0000	0.0000
BLKt	Ar	747.74	0.0000	0.0000	BLKn	S	3047.53	0.0000	0.0000
BLKt	Na	120.85	0.0000	0.0000	BLKn	Si	936.48	0.0000	0.0000
BaNa	Na	27711.44	1.0278	107.2698	BLKn	Ar	751.18	0.0000	0.0000
BaNa	Ba	7369.12	32.0701	670.6336	BLKn	Mg	3622.12	0.0000	0.0000
					BaSr	Sr	210871.20	14.1410	227.8625
					BaSr	Ba	7464.85	32.0692	671.0372

(TOLERANCE UNITS in %)

FILE: 0:QCBEGTOL					FILE: 0:QCENDTOL				
STDEL ID	EL	AREA (cts)	CENTROID (keV)	FWHM (ev)	STD ID	EL	AREA (cts)	CENTROID (keV)	FWHM (ev)
1833	Pb	1.66	0.0313	0.9901	1832	Cu	1.66	0.0104	1.9331
1833	Zn	1.66	0.0131	1.7328	1832	Co	1.70	0.0308	2.4345
1833	Fe	1.66	0.0224	0.9361	1832	Mn	1.66	0.0198	1.3536
1833	Ti	1.66	0.0259	0.9768	1832	Ca	1.66	0.0253	1.1311
1833	Si	1.66	0.0616	1.4120	1832	V	1.66	0.0243	1.1031
1833	K	1.66	0.0323	0.9235	1832	Al	2.02	0.1173	3.3722
BLKt	Sn	12.98	0.0000	0.0000	1832	Si	1.66	0.0481	0.8888
BLKt	Pb	8.93	0.0000	0.0000	1832	Na	1.78	0.1560	1.5333
BLKt	Cu	4.95	0.0000	0.0000	BLKn	Ba	9.92	0.0000	0.0000
BLKt	Sr	17.61	0.0000	0.0000	BLKn	W	8.20	0.0000	0.0000
BLKt	Ni	3.81	0.0000	0.0000	BLKn	Zn	11.45	0.0000	0.0000
BLKt	Fe	7.57	0.0000	0.0000	BLKn	Sr	10.88	0.0000	0.0000
BLKt	S	8.71	0.0000	0.0000	BLKn	Ni	6.55	0.0000	0.0000
BLKt	Al	7.23	0.0000	0.0000	BLKn	Fe	5.63	0.0000	0.0000
BLKt	Ar	17.39	0.0000	0.0000	BLKn	S	2.88	0.0000	0.0000
BLKt	Na	16.00	0.0000	0.0000	BLKn	Si	6.75	0.0000	0.0000
BaNa	N	1.66	0.1103	1.2599	BLKn	Ar	22.14	0.0000	0.0000
BaNa	Ba	2.53	0.0979	3.9782	BLKn	Mg	5.64	0.0000	0.0000
					BaSr	Sr	1.66	0.0073	0.4538
					BaSr	Ba	1.86	0.0279	2.8094

TABLE 6. EXAMPLE PRINTOUT OF SRM 1833

KEVEX SUMMARY: TEFLO® BLANKS LOT #457803 (NEW TUBE)

SITE	=		
DURATION (MIN)	= .0	SAMPLE DATE	= 99/99/99 AND 9999 HOURS
FLOW FRAC	= .0000	FLOW (L/MIN)	= .000 +- .200
XRF ID	= 112141		
SAMPLE ID	= SRM1833		

	FINE, NG/CM^2				NIST CERTIFIED VALUES		
MASS	0.	+-	398.	MASS	15447		
*NA	-801.2	+-	326.4	NA	.0	+-	.0
MG	161.3	+-	18.2	MG	.0	+-	.0
AL	1027.5	+-	102.2	AL	.0	+-	.0
SI	34806.8	+-	3023.4	SI	33366.0	+-	2163.0
P	79.8	+-	19.9	P	.0	+-	.0
*S	-28.2	+-	782.8	S	.0	+-	.0
*CL	-68.6	+-	113.8	CL	.0	+-	.0
K	16734.7	+-	1018.7	K	17147.0	+-	1699.0
*CA	-3.9	+-	61.4	CA	.0	+-	.0
*SC	-17.1	+-	5.4	SC	.0	+-	.0
TI	12852.9	+-	822.1	TI	12821.0	+-	1854.0
*V	46.0	+-	52.2	V	.0	+-	.0
CR	108.2	+-	12.7	CR	.0	+-	.0
MN	13.8	+-	2.9	MN	.0	+-	.0
FE	14332.4	+-	872.4	FE	14212.0	+-	463.0
*CO	-2.6	+-	2.9	CO	.0	+-	.0
NI	62.5	+-	4.6	NI	.0	+-	.0
*CU	3.8	+-	1.5	CU	.0	+-	.0
ZN	3800.9	+-	327.7	ZN	3862.0	+-	309.0
*GA	-30.9	+-	7.7	GA	.0	+-	.0
*GE	5.9	+-	3.6	GE	.0	+-	.0
*AS	5.7	+-	14.6	AS	.0	+-	.0
*SE	-2.0	+-	2.6	SE	.0	+-	.0
*BR	-2.3	+-	2.5	BR	.0	+-	.0
*RB	.5	+-	1.4	RB	.0	+-	.0
*SR	-5.0	+-	2.9	SR	.0	+-	.0
* Y	-2.6	+-	7.5	Y	.0	+-	.0
*ZR	-7.6	+-	3.5	ZR	.0	+-	.0
MO	45.4	+-	5.6	MO	.0	+-	.0
*RH	156.7	+-	69.5	RH	.0	+-	.0
*PD	79.2	+-	67.1	PD	.0	+-	.0
*AG	114.0	+-	69.7	AG	.0	+-	.0

TABLE 6. (continued)

	FINE, NG/CM^2				NIST CERTIFIED VALUES		
*CD	24.7	+-	66.3	CD	.0	+-	.0
*SN	-1496.1	+-	188.1	SN	.0	+-	.0
*SB	88.2	+-	96.2	SB	.0	+-	.0
*TE	240.8	+-	93.8	TE	.0	+-	.0
* I	134.8	+-	107.5	I	.0	+-	.0
*CS	-209.3	+-	106.6	CS	.0	+-	.0
*BA	-5098.1	+-	517.8	BA	.0	+-	.0
*LA	-1416.4	+-	202.2	LA	.0	+-	.0
W	59.9	+-	17.6	W	.0	+-	.0
*AU	8.7	+-	6.8	AU	.0	+-	.0
*HG	-30.6	+-	5.9	HG	.0	+-	.0
PB	16886.2	+-	1028.1	PB	16374.0	+-	772.0

* INDICATES THAT THE CONCENTRATION IS BELOW 3 TIMES THE UNCERTAINTY.
XRF DATE= 28-SEP-93 10:58:37 RBK
SPECTRAL ANALYSIS DATE= 12/14/1993

TABLE 7. EXAMPLE PRINTOUT OF SRM 1832

KEVEX SUMMARY: TEFLO® BLANKS LOT #457803 (NEW TUBE)

SITE	=		
DURATION (MIN)	= .0	SAMPLE DATE	= 99/99/99 AND 9999 HOURS
FLOW FRAC	= .0000	FLOW (L/MIN)	= .000 +- .200
XRF ID	= 112191		
SAMPLE ID	= SRM1832		

FINE, NG/CM^2				NIST CERTIFIED VALUES			
MASS	0.	+-	398.	MASS	16431		
NA	11891.5	+-	1035.0	NA	11173.0	+-	.0
MG	92.2	+-	13.0	MG	.0	+-	.0
AL	15856.5	+-	1373.2	AL	14953.0	+-	986.0
SI	34398.8	+-	2964.2	SI	35491.0	+-	1150.0
P	492.0	+-	32.1	P	.0	+-	.0
S	402.1	+-	27.3	S	.0	+-	.0
CL	156.8	+-	15.9	CL	.0	+-	.0
* K	18.5	+-	18.0	K	.0	+-	.0
CA	20011.7	+-	1218.2	CA	19225.0	+-	1315.0
*SC	-21.8	+-	5.6	SC	.0	+-	.0
*TI	-4.7	+-	130.6	TI	.0	+-	.0
V	4593.6	+-	281.1	V	4272.0	+-	493.0
*CR	7.4	+-	7.3	CR	.0	+-	.0
MN	4959.3	+-	302.4	MN	4437.0	+-	493.0
FE	30.5	+-	3.9	FE	.0	+-	.0
CO	1055.1	+-	64.7	CO	970.0	+-	66.0
*NI	-6.8	+-	1.8	NI	.0	+-	.0
CU	2400.1	+-	146.3	CU	2300.0	+-	164.0
ZN	9.3	+-	2.7	ZN	.0	+-	.0
*GA	2.1	+-	2.1	GA	.0	+-	.0
*GE	.3	+-	2.4	GE	.0	+-	.0
*AS	-3.7	+-	2.2	AS	.0	+-	.0
*SE	1.0	+-	1.2	SE	.0	+-	.0
BR	10.7	+-	1.8	BR	.0	+-	.0
*RB	-.2	+-	.9	RB	.0	+-	.0
*SR	2.8	+-	2.3	SR	.0	+-	.0
* Y	-5.0	+-	1.6	Y	.0	+-	.0
*ZR	-6.5	+-	1.8	ZR	.0	+-	.0
MO	26.8	+-	4.2	MO	.0	+-	.0
*RH	25.2	+-	58.2	RH	.0	+-	.0

TABLE 7. (continued)

	FINE, NG/CM^2			NIST CERTIFIED VALUES			
*PD	-69.0	+-	54.7	PD	.0	+-	.0
*AG	151.2	+-	63.4	AG	.0	+-	.0
*CD	24.2	+-	58.2	CD	.0	+-	.0
*SN	-640.8	+-	138.6	SN	.0	+-	.0
*SB	-73.5	+-	81.3	SB	.0	+-	.0
*TE	-9.3	+-	73.9	TE	.0	+-	.0
* I	-46.6	+-	91.6	I	.0	+-	.0
*CS	3.6	+-	96.7	CS	.0	+-	.0
*BA	-2352.9	+-	328.6	BA	.0	+-	.0
*LA	-509.9	+-	156.5	LA	.0	+-	.0
W	40.0	+-	12.9	W	.0	+-	.0
*AU	-5.6	+-	2.5	AU	.0	+-	.0
*HG	-5.4	+-	3.0	HG	.0	+-	.0
*PB	-10.4	+-	4.2	PB	.0	+-	.0

* INDICATES THAT THE CONCENTRATION IS BELOW 3 TIMES THE UNCERTAINTY.
XRF DATE= 29-SEP-93 13:27:55 RBK
SPECTRAL ANALYSIS DATE= 12/14/1993

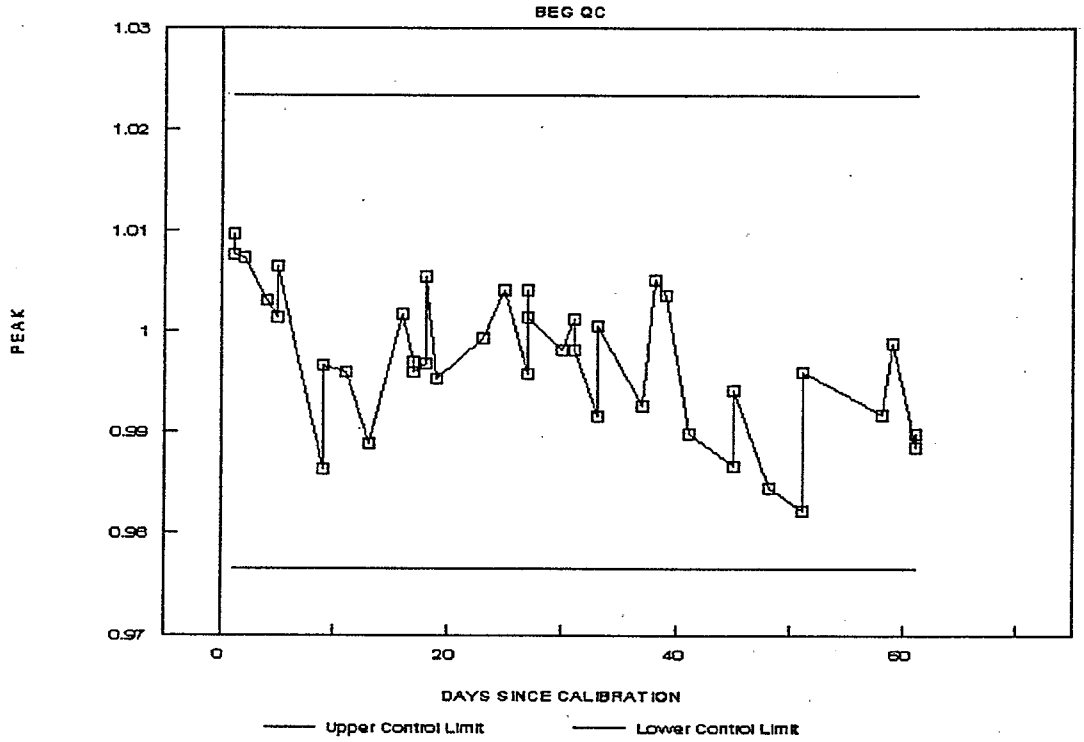

Figure 1. Quality control indicator associated with Fe peak area.

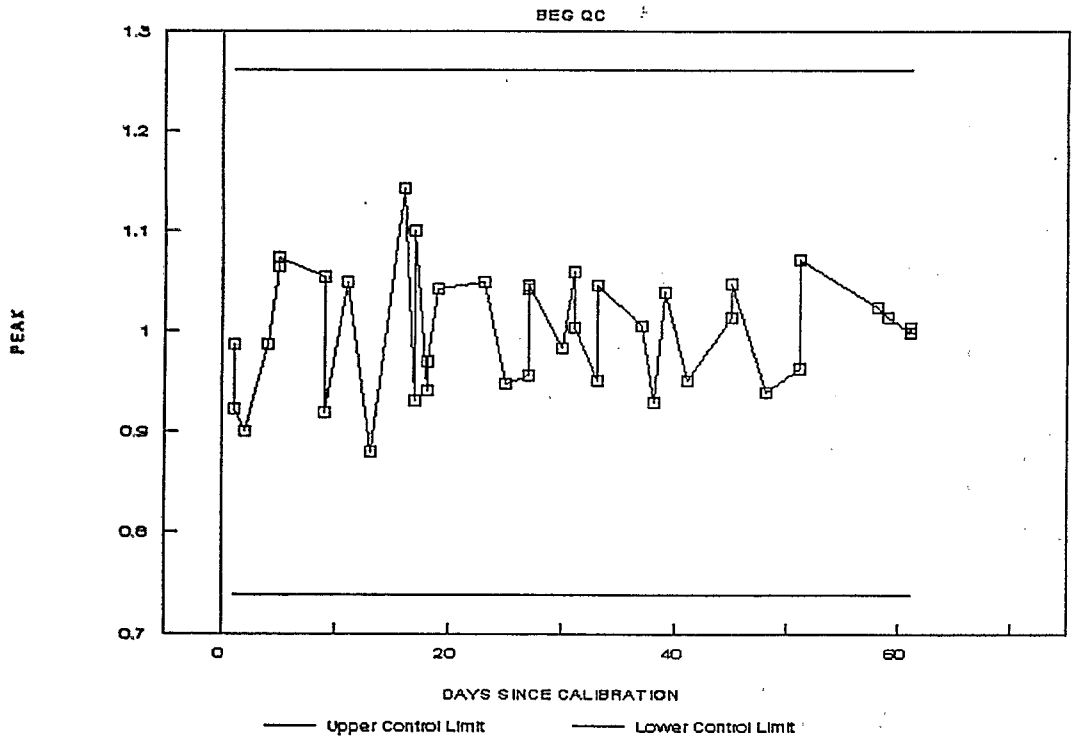

Figure 2. Quality control indicator associated with S background area.

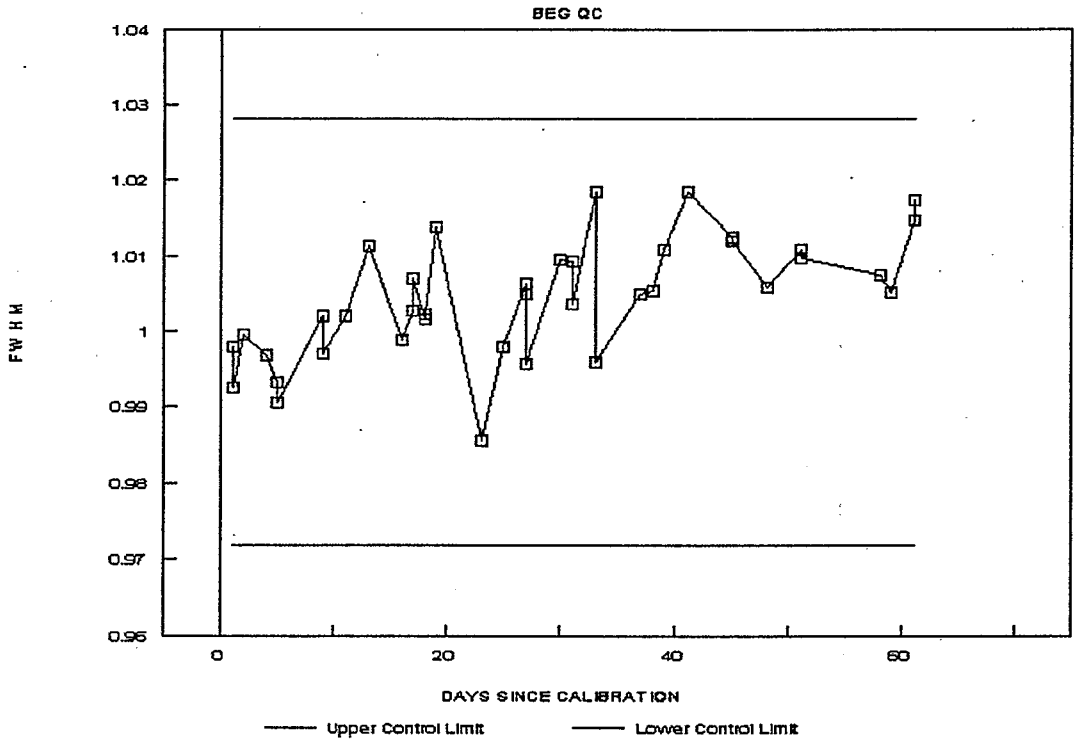

Figure 3. Quality control indicator associated with Fe FWHM.

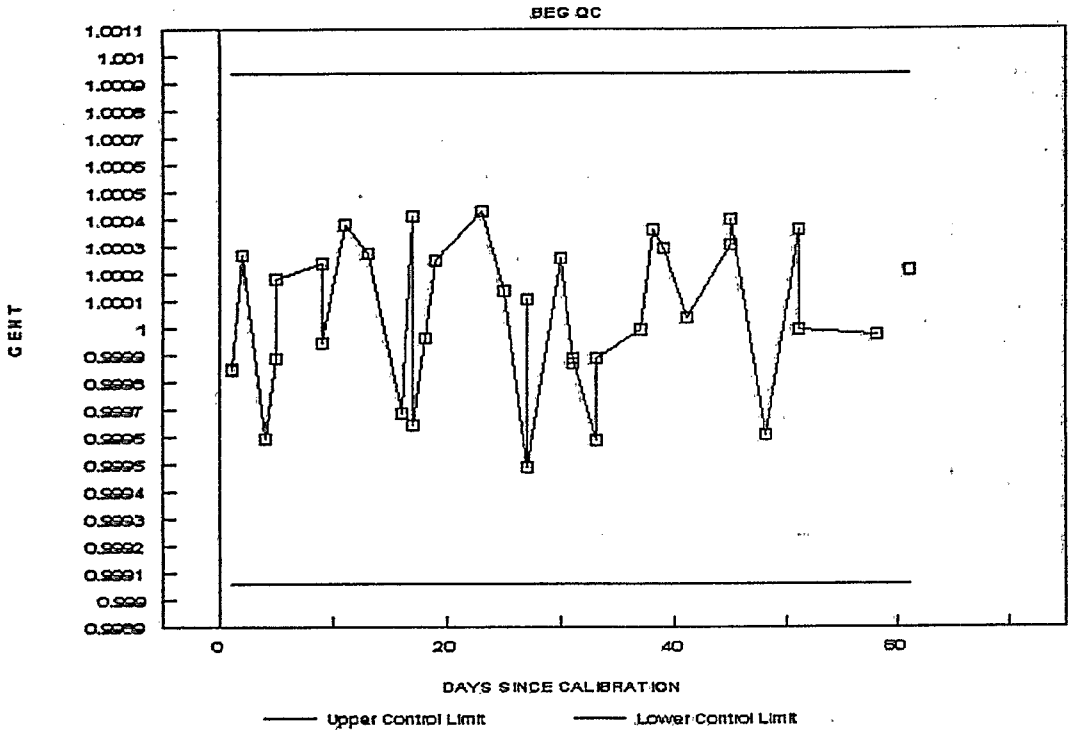

Figure 4. Quality control indicator associated with Pb centroid.

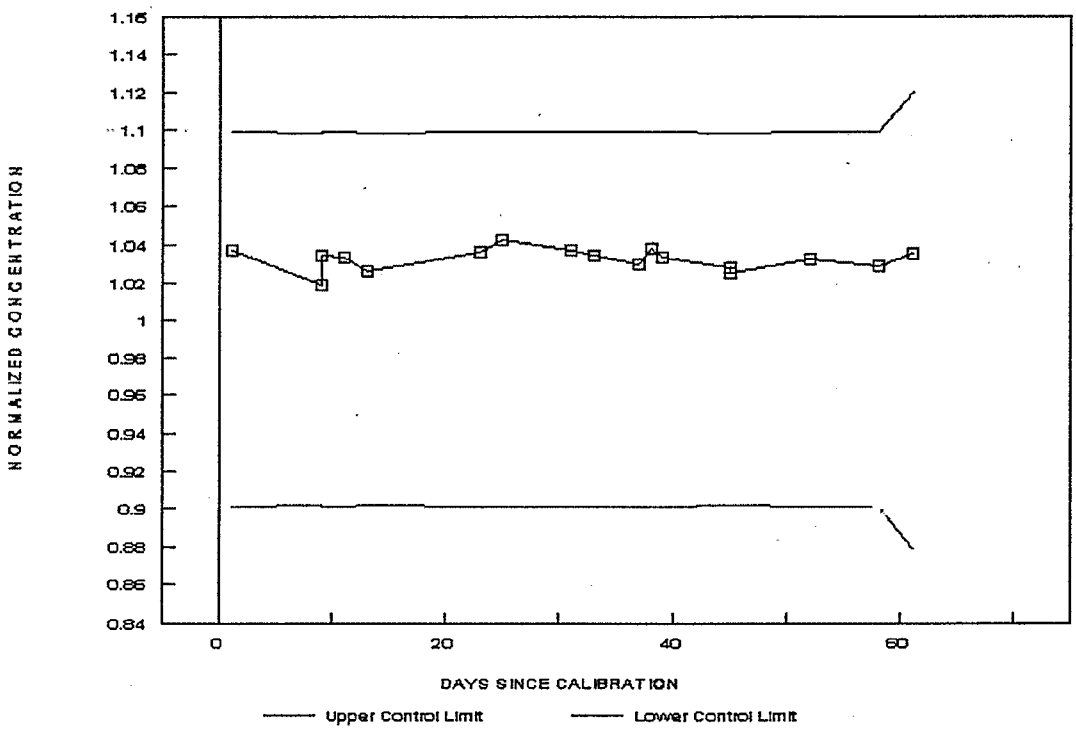

Figure 5. Quality control indicator associated with Pb in SRMs.

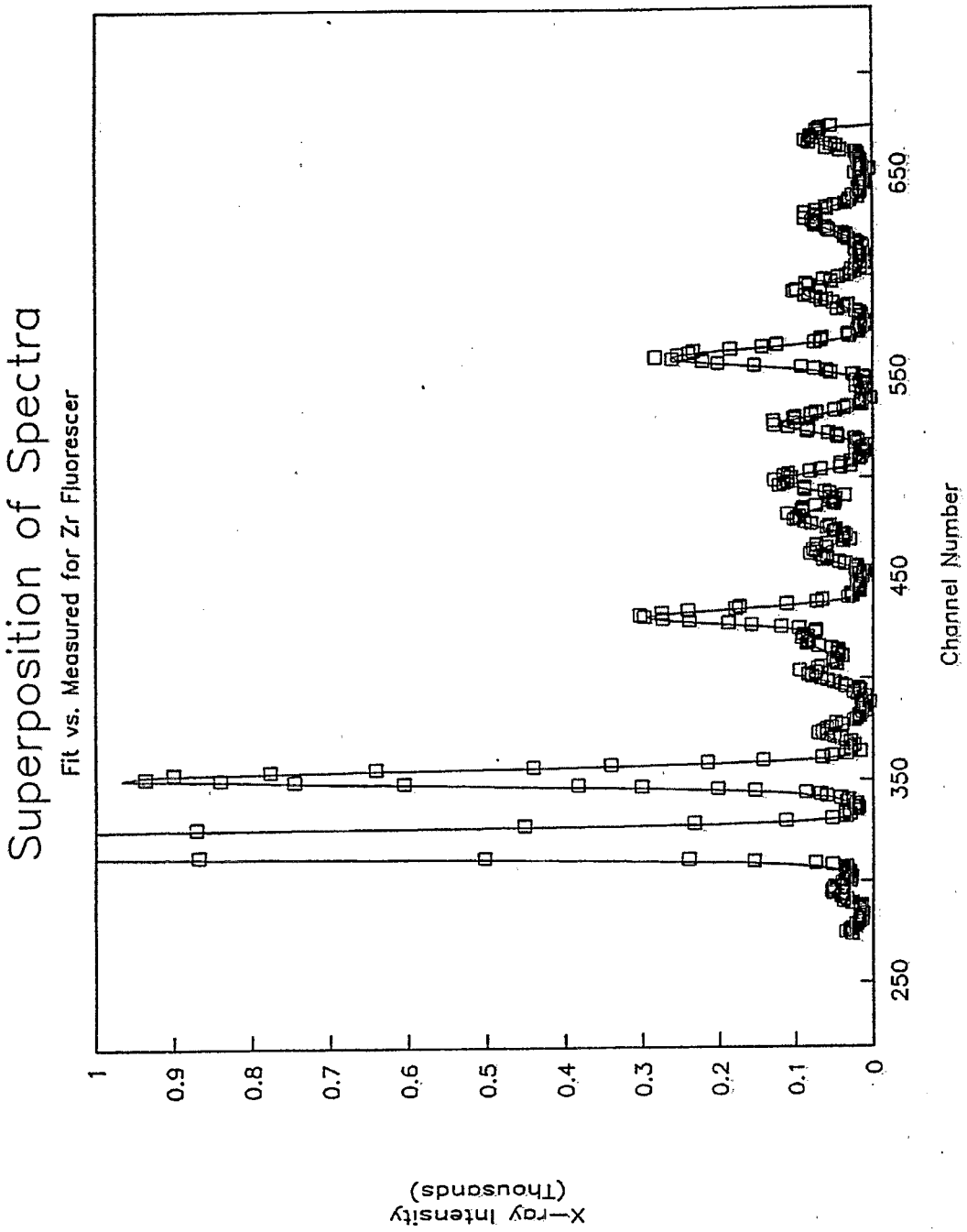

Figure 6. Quality control indicator associated with superposition of fitted and measured spectrum.

EPA/625/R-96/010a

Compendium of Methods for the Determination of Inorganic Compounds in Ambient Air

Compendium Method IO-3.4

DETERMINATION OF METALS IN AMBIENT PARTICULATE MATTER USING INDUCTIVELY COUPLED PLASMA (ICP) SPECTROMETRY

Center for Environmental Research Information
Office of Research and Development
U.S. Environmental Protection Agency
Cincinnati, OH 45268

January 1997

Method IO-3.4

Acknowledgements

This Method is a part of *Compendium of Methods for the Determination of Inorganic Compounds in Ambient Air* (EPA/625/R-96/060a), which was prepared under Contract No. 68-C3-0315, WA No. 2-10, by Midwest Research Institute (MRI), as a subcontractor to Eastern Research Group, Inc. (ERG), and under the sponsorship of the U.S. Environmental Protection Agency (EPA). Justice A. Manning, Center for Environmental Research Information (CERI), and Frank F. McElroy, National Exposure Research Laboratory (NERL), both in the EPA Office of Research and Development, were the project officers responsible for overseeing the preparation of this method. Other support was provided by the following members of the Compendia Workgroup:

- James L. Cheney, Corps of Engineers, Omaha, NB
- Michael F. Davis, U.S. EPA, Region 7, KC, KS
- Joseph B. Elkins Jr., U.S. EPA, OAQPS, RTP, NC
- Robert G. Lewis, U.S. EPA, NERL, RTP, NC
- Justice A. Manning, U.S. EPA, ORD, Cincinnati, OH
- William A. McClenny, U.S. EPA, NERL, RTP, NC
- Frank F. McElroy, U.S. EPA, NERL, RTP, NC
- William T. "Jerry" Winberry, Jr., MRI, Cary, NC

This Method is the result of the efforts of many individuals. Gratitude goes to each person involved in the preparation and review of this methodology.

Author(s)

- William T. "Jerry" Winberry, Jr., MRI, Cary, NC

Peer Reviewers

- Dewayne Ehman, Texas Natural Resource Conservation Committee, Austin, TX
- David Harlos, Environmental Science and Engineering, Gainesville, FL
- Doug Duckworth, Martin Marietta Energy Systems, Inc. Oak Ridge, TN

DISCLAIMER

This Compendium has been subjected to the Agency's peer and administrative review, and it has been approved for publication as an EPA document. Mention of trade names or commercial products does not constitute endorsement or recommendation for use.

Method IO-3.4
Determination of Metals in Ambient Particulate Matter Using Inductively Coupled Plasma (ICP) Spectrometry

TABLE OF CONTENTS

	Page
1. Scope	3.4-1
2. Applicable Documents	3.4-2
2.1 ASTM Standards	3.4-2
2.2 Other Documents	3.4-2
3. Summary of Method	3.4-2
3.1 Instrument Description	3.4-2
3.2 Sample Extraction	3.4-3
3.3 Sample Analysis	3.4-3
4. Significance	3.4-3
5. Definitions	3.4-4
6. Ranges, Sensitivities, and Detection Limits	3.4-5
7. Precision and Accuracy	3.4-5
8. Interferences	3.4-6
8.1 Spectral Interferences	3.4-6
8.2 Matrix Interference	3.4-6
9. Apparatus	3.4-7
10. Reagents	3.4-7
11. Analysis	3.4-8
11.1 Chemical Preparations	3.4-8
11.2 ICP Operating Parameters	3.4-10
11.3 Instrumental Preparations	3.4-10
11.4 Sample Receipt in the Laboratory	3.4-11
11.5 ICP Operation	3.4-11
12. Data Processing	3.4-13
12.1 Filter Blanks and Discrimination Limit	3.4-13
12.2 Data Transmittal to Data Management Analysis Division (DMAD)	3.4-13
12.3 Data and Record Keeping	3.4-14
13. Quality Assurance	3.4-15
13.1 Instrumental Tuning and Standardization	3.4-15
13.2 Calibration For Quantitative Analysis	3.4-15
13.3 Daily QA Check and Analytical Run Sequence	3.4-15
13.4 Corrective Actions	3.4-15
13.5 Routine Maintenance	3.4-16
14. Method Safety	3.4-16
15. References	3.4-17

Chapter IO-3
CHEMICAL SPECIES ANALYSIS OF FILTER-COLLECTED SPM

Method IO-3.4
DETERMINATION OF METALS IN AMBIENT PARTICULATE MATTER USING INDUCTIVELY COUPLED PLASMA (ICP) SPECTROMETRY

1. Scope

1.1 Suspended particulate matter (SPM) in air generally is a complex multi-phase system consisting of all airborne solid and low vapor pressure liquified particles have aerodynamic particle sizes ranging from below 0.01-100 μm and larger. Historically, SPM measurement has concentrated on total suspended particulates (TSP), with no preference to size selection.

1.2 On July 1, 1987, the U. S. Environmental Protection Agency (EPA) promulgated a new size-specific air quality standard for ambient particulate matter. This new primary standard applies only to particles with aerodynamic diameters ≤ 10 μm (PM_{10}) and replaces the original standard for TSP. To measure concentrations of these particles, the EPA also promulgated a new federal reference method (FRM). This method is based on the separation and removal of non-PM_{10} particles from an air sample followed by filtration and gravimetric analysis of PM_{10} mass on the filter substrate.

1.3 The new primary standard (adopted to protect human health) limits PM_{10} concentrations to 150 μg/std m^3, averaged over a 24-h period. These smaller particles are able to reach the lower regions of the human respiratory tract and, therefore, are responsible for most of the adverse health effects associated with suspended particulate pollution. The secondary standard, used to assess the impact of pollution on public welfare, has also been established at 150 μg/std. m^3.

1.4 Ambient air SPM measurements are used (among other purposes) to determine whether defined geographical areas are in attainment or non-attainment with the national ambient air quality standards (NAAQS) for PM_{10}. These measurements are obtained by the states in their state and local air monitoring station (SLAMS) networks as required under 40 CFR Part 58. Further, Appendix C of Part 58 requires that the ambient air monitoring methods used in these EPA-required SLAMS networks must be methods that have been designated by EPA as either reference or equivalent methods.

1.5 The procedure for analyzing the elemental metal components in ambient air particulate matter collected on high volume filter material is described in this method. The high volume filter material may be associated with either the TSP or PM_{10} sampler, as delineated in Inorganic Compendium Method IO-2.1.

1.6 Filters are numbered, pre-weighted, field deployed and sampled, returned to the laboratory, extracted using microwave or hot acid, then analyzed by inductively coupled plasma (ICP) spectrometry. The extraction procedure is accomplished by following Inorganic Compendium Method IO-3.1.

1.7 This method should be used by analysts experienced in the use of ICP, the interpretation of spectral and matrix interferences and procedures for their correction. A minimum of 6-months experience with commercial instrumentation is required.

1.8 Those metals and their associated method detection limit (MDL) applicable to this technology are listed in Table 1.

2. Applicable Documents

2.1 ASTM Standards

- D1356 *Definition of Terms Related to Atmospheric Sampling and Analysis.*
- D1357 *Planning the Sampling of the Ambient Atmosphere.*
- D4096 *Application of the High Volume Sample Method for Collection and Mass Determination of Airborne Particle Matter.*

2.2 Other Documents

- U. S. Environmental Protection Agency, *Quality Assurance Handbook for Air Pollution Measurement Systems, Volume I: A Field Guide for Environmental Quality Assurance*, EPA-600/R-94/038a.
- U. S. Environmental Protection Agency, *Quality Assurance Handbook for Air Pollution Measurement Systems, Volume II: Ambient Air Specific Methods (Interim Edition)*, EPA-600/R-94/038b.
- *Reference Method for the Determination of Particulate Matter in the Atmosphere*, 40 CFR 50, Appendix J.
- *Reference Method for the Determination of Suspended Particulates in the Atmosphere (High Volume Method)*, 40 CFR 50, Appendix B.
- *Reference Method for the Determination of Lead in Suspended Particulate Matter Collected from Ambient Air*, *Federal Register* 43 (194): 46258-46261.
- U. S. EPA Project Summary Document (1).
- U. S. EPA Laboratory Standard Operating Procedures (2).
- Scientific Publications of Ambient Air Studies (3-7).

3. Summary of Method

3.1 Instrument Description

3.1.1 The analytical system is an inductively coupled plasma atomic emission spectrometer, as illustrated in Figure 1. The plasma is produced by a radio frequency generator. The current from the generator is fed to a coil placed around a quartz tube through which argon flows. The oscillatory current flowing in the coil produces an oscillating magnetic field with the lines of force aligned axially along the tube. The argon is seeded with electrons by momentarily connecting a Tesla coil to the tube where the plasma forms inside. The ions in the gas tend to flow in a circular path around the lines of force of the oscillatory magnetic field and the resistance to their flow produces the heat. To avoid melting the silica tube, a flow of argon is introduced tangentially in the tube, which centers the plasma away from the walls of the tube. The plasma is formed in the shape of a toroid or doughnut, and the sample is introduced as an aerosol through the middle of the toroid. The hottest part of the plasma is in the ring around the center of the toroid, where temperatures of about 10,000 K are achieved. Through the center of the toroid where the sample is introduced, the temperature is somewhat lower, and the sample is subjected

to temperatures of about 7,000 K. From the very hot region in the plasma and just above it, a continuum is radiated because of the high electron density. Above this region, the continuum emission is reduced as the temperature falls and the spectral lines of the elements in the sample may be observed. Since this plasma is generated in an inert atmosphere, few chemical interferences exist.

3.1.2 The spectrum is resolved in a spectrometer. The relative intensities and concentrations of the elements are calculated by a small computer or processor. Samples containing up to 61 preselected elements can be analyzed by ICP simultaneous analysis at a rate of 1 sample per minute. The ICP technique can analyze a large range of concentrations. A single calibration curve can accomodate changes in concentration of 5 orders of magnitude.

3.2 Sample Extraction

Two extraction procedures may be performed: hot acid extraction or microwave extraction, as documented in Inorganic Compendium Method IO-3.1. Extraction involving hot acids is hazardous and must be performed in a well-ventilated fume hood.

3.3 Sample Analysis

A technique for the simultaneous or sequential multi-element determination of trace elements in an acid solution is described in this Compendium method (see Figure 2). The basis of the method is the measurement of atomic emission by an optical spectroscopic technique. Samples are nebulized and the aerosol that is produced is transported to the plasma torch where excitation occurs. Characteristic atomic-line emission spectra are produced by a radio frequency ICP. The spectra are dispersed by a grating spectrometer, and the intensities of the line are monitored by photo multiplier tubes. The photo currents from the photo multiplier tubes are processed and controlled by a computer system. A background correction technique is required to compensate for variable background contribution to the determination of trace elements. Background must be measured adjacent to analyte lines on samples during analysis. The position selected for the background intensity measurement, on either or both sides of the analytical line, will be determined by the complexity of the spectrum adjacent to the analyte line. The position used must be free of spectral interference and reflect the same change in background intensity as occurs at the analyte wavelength measured. Data is processed by computer and yields micrograms of metal of interest per cubic meter of air sampled ($\mu g/m^3$).

4. Significance

4.1 The area of toxic air pollutants has been the subject of interest and concern for many years. Recently, the use of receptor models has documented the need for elemental composition of atmospheric aerosol into components as a means of identifying their origins. The assessment of human health impacts, resulting in major control actions by federal, state, and local governments, is based on these data. Accurate measures of toxic air pollutants at trace levels are essential for proper assessments. The advent of inductively coupled plasma spectroscopy has improved the speed and performance of metals analysis in many applications.

4.2 ICP spectroscopy is capable of quantitatively determining most metals at levels that are required by federal, state, and local regulatory agencies. Sensitivity and detection limits may vary from instrument to instrument.

5. Definitions

[Note: Definitions used in this method are consistent with ASTM methods. All pertinent abbreviations and symbols are defined within this document at point of use.]

5.1 Autosampler. Device that automatically sequences injections of sample solutions into the ICP.

5.2 Background Correction. Removing a high or variable background signal, using only the peak height of intensity for calculating concentration. Instruments measure background at one or more points slightly off the emission wavelength and subtract the intensity from the total intensity measured at the analytical wavelength.

5.3 Channels. Simultaneous ICPs have an array of photo multiplier tubes positioned to look at a fixed set of elements (wavelengths); each wavelength is a "channel," which varies by instrument.

5.4 Detection Limits. Determined by calibrating the ICP and determining the standard deviation of apparent concentrations measured in pure water. The result (σ) is multiplied by a factor from 2 to 10 (usually 3) to define a "detection limit." Complex sample matrices result in a higher background noise than pure water, so actual detection limits vary considerably with sample type. EPA requires an instrument detection limit (IDL) to be measured in a standard whose concentration is about three times the expected detection limit.

5.5 Detectors. Photomultiplier tubes (PMTs).

5.6 Fixed Optics. The most crucial element in the optical design. If the grating moves during measurement, uncertainties in the results are inevitable.

5.7 Grating. The optical element that disperses light.

5.8 Integration Time. The length of time the signal from the PMT is integrated for an intensity measurement. The most precise measurements are taken at the peak intensity.

5.9 Inter Element Intereference. When emission lines from two elements overlap at the exit slit, light measured by the PMT is no longer a simple measure of the concentration of one element. The second element interferes with the measurement of the first at that wavelength. If lines free of interference can't be found, approximate concentrations of the element of interest can be calculated by calibrating that element and the interferent (inter element correction).

5.10 Linear Dynamic Range. The light intensity in an ICP source varies linearly with the concentration of atoms over more than 6 orders of magnitude (the linear dynamic range). This variation allows for determination of trace and major elements in a single sample, without dilution. Fewer standards for calibration are needed, often a high standard and a blank suffice.

5.11 Limit of Quantitation. The lowest level at which reliable measurements can be made. Defined as ten times the standard deviation of a measurement made in a blank (pure water), which is 3.3 times the "3σ" detection limit.

5.12 Monochromator. The spectrometer design on a sequential ICP.

5.13 Nebulizer. A device creating a fine spray of sample solution to be carried into the plasma for measurement. Its performance is critical for good analyses.

5.14 Photo Multiplier Tubes (PMTs). Light detectors in ICP instruments. When struck by light, the PMT generates a current proportional to the intensity.

5.15 Polychromator. The spectrometer design of a simultaneous ICP.

6. Ranges, Sensitivities, and Detection Limits

6.1 Sensitivity, instrumental detection limit, precision, linear dynamic range, and interference effects must be investigated and established for each individual analyte line on a particular instrument. All measurements must be within the instrument linear range where correction factors are valid. The analyst must verify that the instrument configuration and operating conditions satisfy the analytical requirements and to maintain quality control data, i.e., confirming instrument performance and analytical results.

6.2 For comparison, Table 1 provides typical maximum element concentrations obtained on a Thermo Jarrell Ash Model 975 Plasma AtomComp (see Section 9.9.4) ICP.

6.3 Calibration sensitivities are dependent upon spectral line intensities. For comparison, Table 1 provides typical sensitivities for the ICP mentioned in Section 6.2 for a Jarrell Ash Model 975 Plasma AtomComp ICP.

6.4 Detection limits vary for various makes and models. Typical detection limits achievable by the Thermo Jarrell Ash Model 975 ICP are given in Table 1. These are computed as 3.3 times the standard deviation of the distribution of outputs for the repeated measurement of a standard, which contains no metals and is used as the zero point for a two-point instrument standardization described in Section 12.3. The acid concentrations of this standard must match the acid concentrations of blanks and samples.

7. Precision and Accuracy

7.1 Accuracy for this procedure has not been determined. Spiked strips used for audits have been developed by the EPA. The main use of the audit results is to document chronologically the consistency of analytical performance. One multi-element audit sample should be extracted daily with normal ambient air samples. Audit samples can only approximate true atmospheric particulates, which contributes to the overall uncertainty. Attempts should be made to use National Institute of Standards and Technology (NIST) 1648 (urban particulate) to judge recovery. This material is not ideal because (1) there is no filter substrate; (2) relatively large amounts (100 mg) are required to overcome problems of apparent

inhomogeneity, which in turn necessitates dilutions not required in normal application of this method; and (3) element ratios differ somewhat from those found in real samples. Typical recoveries experienced with the spiked strips and NIST 1648 are presented in Table 2.

7.2 Typical precision, bias, and correlation coefficients calculated from audit samples vs. blind replicate analyses are shown in Table 3. Treatment of the glass fibers during filter manufacture affects both recovery and precision of sample replicate pairs. This fact should be considered when studies are designed.

7.3 Good precision data does not imply accuracy; bias is still possible. Bias is nearly impossible to detect when a given type of sample is always analyzed by the same method using the same instrumentation. In this method, bias, if any, is most likely to arise during the sampling and sample preparation steps.

7.4 Quality assurance (QA) activities are discussed in Section 14 of this method. QA data for the method are composed of QA data for the instrument and for the sampling and sample preparation steps. The former are relatively easy to obtain by the analysis of known solutions and are usually quite good because of the inherent stability and linearity of the plasma and associated electronics. QA data for the sampling and sample preparation steps are nearly always poorer than for the instrument and thus dictate the QA data for the method as a whole. Consequently, a good instrumental calibration does not guarantee that the data produced are accurate. For instance, independent analysis (by neutron activation analysis) of real samples and of NIST SRM 1648 has revealed that Cr and Ti extractions are 25-75% efficient using the method described herein, yet both elements in solution are recovered very well by the plasma instrument.

8. Interferences

8.1 Spectral Interferences

Spectral interferences result when spectrally pure solutions of one element produce a finite output on channels assigned to other elements. When the quantitative correction is made, the order of correction is arranged so that only "true" (that is, interference-free or previously corrected) values are used in any quantitative correction of another element for comparison. The quantitative correction factors are listed in Table 4 in the order in which they are applied in the data-processing step for the analysis of ambient air using the Thermo Jarrell Ash Model 975 ICP. The correction relation for any affected element is:

$$\text{"true" concentration} = \frac{\text{(apparent conc.)} - \text{(correction factor "true")}}{\text{(concentration of the affecting element)}}$$

8.2 Matrix Interference

Matrix interferences do exist. This problem has been minimized by matrix matching of standards and samples. Matrix interferences depend on the types and quantities of acids used; element emission lines may be enhanced or depressed. These interferences may be circumvented by careful matrix matching of standards, QC solutions, and samples. Careful matches were made in the development of this procedure.

9. Apparatus

[Note: This method was developed using an ICP provided by Thermo Jarrell Ash, 27 Forge Parkway, Franklin, MA 02038, (508) 520-1880, as a guideline. EPA has experience in use of this equipment during various field monitoring program over the last several years. Other manufacturers' equipment should work as well. However, modifications to these procedures maybe necessary if another commercially available sampler is selected.]

9.1 Desiccator. For cooling oven-dried chemicals.

9.2 Gravity Convection Type Drying Oven. Drying chemicals and glassware, Precision Scientific 31281 or equivalent.

9.3 Mechanical Convection Type Drying Oven. For drying plastic ware (Blue Island Electric OV 510A-2 or equivalent).

9.4 Inductively Coupled Plasma Emission Spectrometer. The ICP described in this method is the Thermo Jarrell Ash Model 975 Plasma AtomComp, 27 Forge Parkway, Franklin, MA 02038, (508) 520-1880. The instrument uses a Plasma Therm HFS 2000D R.F. generator as the power supply for the plasma. The excitation source is a three-turn inductively coupled plasma torch with a cross-flow pneumatic nebulizer for sample introduction. Samples are pumped to the nebulizer with a Gilson Minipuls II single channel peristaltic pump. The instrument is equipped to read 48 elements as identified in Table 4. A dedicated PDP-8E (Digital Equipment Corporation) minicomputer controls the instrument and yields a concentration printout. To achieve data storage capability, the PDP-8E has been interfaced with a PDP11/34.

9.5 Bottles. Linear polyethylene or polypropylene with leakproof caps for storage of samples. (500 mL, 125 mL, and 30 mL). Teflon bottles for storing multi-element standards.

9.6 Pipettes. Volumetric 50 mL, 25 mL, 20 mL, 15 mL, 10 mL, 9 mL, 8 mL, 7 mL, 6 mL, 5 mL, 4 mL, 3 mL, 2 mL, Class A borosilicate glass.

9.7 Pipettes. Graduated 10 mL, Class A Borosilicate glass.

9.8 Pipette. Automatic dispensing with accuracy of 0.1 mL or better and repeatability of 20 μL (Grumman Automatic Dispensing Pipet, model ADP-30DT, or equivalent).

10. Reagents

10.1 Hydrochloric Acid. Ultrex grade (12.12 M) (Baker 1-4800) for preparing standards.

10.2 Nitric Acid. ACS reagent grade, concentrated (16 M) for preparing 20% v/v nitric acid, to clean labware only (Fisher A-200). Acid is not for sample preparation; it contains excessive metals. (Fisher A-200).

10.3 Nitric Acid. Ultrex grade (15.95 M) (Baker 1-4801) for preparing standards.

10.4 Stock Calibration Standards. Multi-element concentrated calibration standards are obtained commercially (Spex Industries). When properly diluted, these produce the working standards described in Section 12.1. (Alternatively, single-element stock standards, prepared as directed in Appendix A, may be used to produce the working standards).

10.5 High Quality Control (QC) Solution. A multi-element solution of 48 metals at approximately 80% the concentration of working standards. It is prepared from single element master stock standards described in Appendix A, according to instructions in Section 12.1. This solution may be obtained commercially if the source is different from the source for stock calibration standards.

10.6 Low Quality Control Solution. A dilution of one part high QC solution and four parts Standard No. 1.

10.7 Standard No. 1. The acid matrix blank solution (no metals) used as the zero point during instrument standardization.

10.8 Compressed Argon in Cylinders and Liquid Argon in Tanks, Purity 99.95%. Best source.

10.9 ASTM Type II water (ASTMD1193). Best source.

11. Analysis

11.1 Chemical Preparations

11.1.1 All labware should be scrupulously cleaned. The following procedure is recommended: Wash with laboratory detergent or ultrasonic for 30 min with laboratory detergent. Rinse and soak a minimum of 4 h in 20% V/V nitric acid. Rinse 3 times with deionized, distilled water, and oven dry.

[Note: Nitric and hydrochloric acid fumes are toxic. Prepare in a well-ventilated fume hood. Mixing results in an exothermic reaction. Stir slowly.]

11.1.2 Prepare a 1.34 M HCl Solution. Add about 250 mL of deionized, distilled water to a clean 500-mL volumetric flask. Add 55.48 mL of Ultrex-grade hydrochloric acid (12.12 M). Dilute to 500 mL with deionized, distilled water. Shake and store in a 500-mL Teflon® bottle.

11.1.3 Prepare a Working Standard No. 1 (EPA 1). This acid matrix blank (no metals) solution is used as the zero point during instrument standardization. Add about 500 mL of deionized, distilled water to a clean 1-L volumetric flask. Add 55.2 mL of Ultrexgrade hydrochloric acid (12.12 M) and 19.5 mL of Ultrex-grade nitric acid (15.95 M). Dilute to 1 L with deionized, distilled water. Shake and store in a 1-L Teflon® bottle.

11.1.4 Prepare a Working Standard No. 2 (EPA 2). This standard is prepared from the stock calibration standard designated EPA NC-2 by the supplier (Spex Industries). Composition and concentration of the stock and the diluted working standard are given in Table 5A. Add about 50 mL of deionized distilled water to a clean 100-mL volumetric flask. Add 5.52 mL of Ultrex-grade hydrochloric acid (12.12 M), 1.85 mL of Ultrex-grade nitric acid (15.95 M), and 5.0 mL of the stock EPA NC-2 standard. Dilute to volume with deionized, distilled water. Shake thoroughly and transfer to a 100-mL Teflon® bottle. Fresh working standards should be prepared at least once every 2 weeks. Alternatively, Working Standard No. 2 may be prepared from in-house, single-element stock standards described in Appendix A. The elements, acids, and aliquots required to prepare a 500-mL volume are listed in Table 5B.

11.1.5 Prepare a Working Standard No. 3 (EPA 3). This standard is prepared from the stock calibration standard designated EPA NC-3 by the supplier. Composition and concentration of the stock and the diluted working standards are shown in Table 6A. Add about 50 mL of deionized distilled water to a clean 100-mL volumetric flask. Add 4.52 mL of Ultrexgrade hydrochloric acid (12.12 M), 1.95 mL of Ultrex-grade nitric acid (15.95 M), and 5.0 mL of the stock EPA NC-3 standard. Dilute to volume with deionized distilled water. Shake thoroughly and transfer to a 100-mL Teflon® bottle. Alternatively, Working Standard No. 3 may be prepared from in-house single-element stock standards described in Appendix A. The elements, acids, and aliquots required to prepare a 5OO-mL volume are listed in Table 6B.

11.1.6 Prepare a Working Standard No. 4 (EPA 4). This standard is prepared from the stock calibration standards designated EPA NC-4A and EPA NC-4B by the supplier. Compositions and concentrations of the stocks and the diluted working standard are shown in Table 7A. Add about 50 mL of deionized, distilled water to a clean 100-mL volumetric flask. Add 5.52 mL of Ultrex-grade hydrochloric acid (12.12 M), 1.70 mL of Ultrex-grade nitric acid (15.95 M), 5.0 mL of the stock EPA NC-4A standard, and 5.0 mL of the stock EPA NC-4B standard. Dilute to volume with deionized distilled water. Shake thoroughly and transfer to a 100-mL Teflon® bottle. Alternately, Working Standard No. 4 may be prepared from in-house, single-element stock standards described in Appendix A. The elements, acids, and aliquots required to prepare a 500-mL volume are listed in Table 7B.

11.1.7 Prepare a Working Standard No. 5 (EPA 5). This standard is prepared from the stock calibration standards designated EPA NC-SA and EPA NC-SB by the supplier. Composition and concentration of the stocks and the diluted working standard are shown in Table 8A. Add about 50 mL of deionized, distilled water to a clean 100-mL volumetric flask. Add 4.52 mL of Ultrex-grade hydrochloric acid (12.12 M), 1.95 mL of Ultrex-grade nitric acid (15.95), 5.0 mL of the stock EPA NC-SA standard, and 5.0 mL of the stock EPA NC-SB standard. Shake thoroughly and transfer to a 100-mL Teflon bottle. Alternatively, Working Standard No. 5 may be prepared from in-house, single-element stock standards described in Appendix A. The elements, acids, aliquots to prepare a 500-mL volume are listed in Table 8B.

11.1.8 Prepare a High Quality Control (QC) Solution. This solution is prepared by adding about 500 mL of working Standard No. 1 (EPA 1) to a clean 1-L flask. Add 32 mL of 1.34 M Ultrex-grade hydrochloric acid prepared as directed in Section 12.1.4. Refer to Table 9 and pipette indicated aliquots of the single-element stock standards described in Appendix A into the same flask. Swirl the flask after each addition. Dilute to 1 L with additional working Standard No. 1. Shake thoroughly and transfer to a 1-L Teflon® bottle.

[Note: Niobium, Tantalum, and Tungsten slowly precipitate from this solution. A faint precipitate is observed in about 1 month. If these elements are analytically important, a fresh solution of a smaller quantity should be prepared.]

11.1.9 Prepare a Low Quality Control Solution. This solutions is prepared by dilution of the high QC solution. Add about 200 mL of working Standard No. 1 (EPA 1) to a clean 500-mL volumetric flask. Pipette a 125-mL aliquot of the high QC solution into the flask. Dilute to volume with additional working Standard No. 1. Shake thoroughly and transfer to a 500-mL Teflon bottle.

11.1.10 Prepare a Reagent Blanks. Reagent blanks are not prepared separately. Choose a centrifuge tube with 12.0 mL of extracting acid at random from the set to be used with real samples. Due not add a filter strip; however, subject the tube to all processing steps with the real sample set. The running frequency of reagent blanks is about 1 for every 40 real samples.

11.2 ICP Operating Parameters

A daily log of the operating parameters should be maintained for reference. Entries are made by the analyst of periodic intervals throughout the run. An example of one day's log, which has been typed for clarity, is shown in Figure 3. The data in Figure 3 and the following list of parameters are examples from the Thermo Jarrell Ash Model 975 Plasma AtomComp.

ICP HARDWARE	SPECIFICATIONS
• Plasma power	1.1 kW forward automatic control 11 W reflected (minimum possible)
• Argon coolant flow	18 1/min liquid argon source
• Argon nebulizer flow	16 psi (approx. 700 mL/min)
• Sample uptake	Avg. 1.85 mL/min
• Observation Zone	Centered 16 mm above the load coil
• Sample preflush time	45 s; preburn, 1 s
• Exposure	10 s
• H_2O Post Flush	10 s then proceed to next sample
• Slits	25-μm entrance slit; 75-μm exit slit
• Photomultiplier tube voltage	900 V

11.3 Instrumental Preparations

11.3.1 Calibration Curve Linearity. ICP spectrometers generally are considered to yield a linear response over wide concentration ranges; however, investigation for linearity for elements expected to exceed concentrations of about 25 mg/L may be necessary. Linearity may vary among manufacturers and according to perating parameters. The method and conditions described in this procedure have imposed the following limitations:

- Ca response is linear to 40 mg/L, becoming non-linear.
- Cr saturates the electronics at 50 mg/L.
- Cu saturates the electronics at 40 mg/L.
- Fe saturates the electronics at 230 mg/L.
- Mg response is curvilinear to 40 mg/L, becoming unuseable.
- Na response is curvilinear to 80 mg/L, becoming unuseable.

The curvilinear nature of Mg and Na responses below the levels specified were made acceptable by programming the ICP computer with segmented calibration curves as described in the manufacturer's instructions.

11.3.2 Spectral Interferences. Section 8 described briefly spectral interferences. A thorough determination of spectral interferences is a lengthy, time-consuming study in itself. The following are some of the factors influencing the presence or absence and magnitude of interferences:

- Wavelength of lines being read.
- Expected concentrations of the elements involved.
- Quality and the stability of the system optics (i.e., minimal deterioration with time).
- Quality and stability of photo multiplier tubes and electronics.
- Purity of chemicals in use.

A thorough study of interferences has been conducted by EPA in the development of this method and have been addressed in the data processing program listed in Table 10.

11.3.3 Matrix Interferences. Matrix interferences depend on the types and quantities of acids used; element emission lines may be enhanced or depressed. These interferences may be circumvented by careful matrix matching of standards, QC solutions, and samples. Careful matches should be made in the use of this procedure.

11.4 Sample Receipt in the Laboratory

11.4.1 The sample should be received from the extraction laboratory in a 10-mL flask, diluted to the mark, as documented in Inorganic Compendium Method IO-3.1.

11.4.2 No additional preservation is needed at this time. Sample is ready for ICP analysis.

11.5 ICP Operation

[Note: Because of the differences between various makes and models of satisfactory instruments, no detailed operating instructions can be provided. Instead, the analyst should follow the instructions provided by the manufacturer of the particular instrument. The following step-by-step procedures, used with the Jarrell Ash Model 975 Plasma AtomComp configured as described in Section 9.2.9, are provided as guidance to be modified as necessary for the specific instrument used.]

11.5.1 Start and allow the instrument at least 45 min for warmup.

11.5.2 Profile following manufacturer's directions. Run 12 warmup burns of old high QC solution to exercise the photomultiplier tubes.

11.5.3 Standardize by opening the standardization buffers with a J command on the CRT operating off-line from the PDP-11/34. Flush for 2 min with the first working standard. Make two exposures,

print the average ratio on the teletype, and identify the standard when queried. Repeat for all five working standards. Complete with an S command and answer the query "Enter LCN" with a carriage return (RTN). Calibration data are not stored in the PDP-ll.

11.5.4 Go on-line to the PDP-ll by typing "RUN JA" and answer PDP-ll queries to identify the operator, data storage, and operating condition codes.

11.5.5 The PDP-ll will automatically acquire gains and offsets (slopes and X-intercepts of the calibration curve) determined by the ICP standardization. Values falling outside a previously determined bandwidth will be reported by the computer. When this occurs, corrective action must be taken. Gain and offset values are element-specific.

11.5.6 Measure the sample-pump uptake rate which should be approximately 1.8 mL/min.

11.5.7 Select a QC solution for analysis. On the CRT, enter RTN "QC" RTN "21", RTN for high QC, or "QC" RTN "22", RTN for low QC. When "DSC" appears on CRT, type "HIQC" or "LOQC", as applicable, followed by its prep date and RTN. The number "1.0" will appear twice, indicating the multiplication and dilution factors have been set to 1.0. This step is followed by the query "OK?"

11.5.8 Begin pumping the QC solution selected in Section 11.5.7 from an aliquot. Start the stopwatch when the leading edge of the solution has just entered the nebulizer. Time for 45 s and press RTN on the CRT to begin the exposure. The end is signaled by the CRT bell. Transfer the pickup tube to deionized distilled water.

11.5.9 When the PDP-ll has acquired the data, it will query "QC SMP:." Type RTN, "STD," RTN "21," RTN to identify the zero standard (Working Standard No. 1; see Section 11.1). After "DCS:" As in Section 11.5.7, the multiplication and dilution factors will default to 1.0, and the query "OK?" will appear.

11.5.10 Begin pumping from an aliquot of the zero standard and time for 45 s, as in Section 11.5.8. Start the exposure with RTN on the CRT. At the bell, return the pickup to deionized, distilled water.

11.5.11 When the PDP-ll has acquired the data, it will query "STD SMP:." Type "1," RTN, RTN, and it will query "OK?" Type "NO," RTN and the cursor will move to the left end of the line.

11.5.12 Select the first sample. On the CRT, enter the Project I.D. from the label. Press RTN. Type numerical sample number and RTN. After "DCS:," type the four letter I.D. code and RTN. The computer next queries "MLT:" (for multiplication factor); enter "360", RTN. After "DIL:" (for dilution factor), enter "1," RTN. The computer then asks "OK?"

11.5.13 Begin pumping the sample from the sample bottle and time for 45 s before pressing RTN. At the bell, return the pickup to deionized, distilled water and select the next sample.

11.5.14 Enter second sample by typing the sample number, RTN, 4-letter I.D., RTN, and another RTN to begin the exposure.

11.5.15 Present 8 samples to the instrument.

11.5.16 Challenge the instrument with the QC solution that was not selected in Section 11.3.7. Repeat CRT entries and procedure in Sections 11.5.7 and 11.5.8.

11.5.17 Resume sample analysis. Repeat Sections 11.5.11 through 11.5.13.

11.5.18 Analyze nine samples.

11.5.19 Return to Section 11.5.6 and repeat through Section 11.5.17.

11.5.20 End the analytical session after about 3 to 3.5 h. Type "-1," RTN. The computer will query "DO YOU WISH TO SAVE THIS SESSION'S DATA?" Type "YES," RTN. The computer will back up the data and issue instructions. This terminates the RUN JA program.

11.5.21 Usually two sessions per day are attempted. Repeat Sections 11.5.2 through 11.5.20 for the second session.

11.5.22 Instrument operating parameters are recorded before and after every 20 burns. A typical day's record is shown in Figure 3.

11.5.23 With minimal experience, the instrument operator will be able to compress the above steps (i.e., process more than one sample at a time by overlapping the steps required for the different samples).

12. Data Processing

12.1 Filter Blanks and Discrimination Limit

Since individual blanks are not available from each filter used for sampling, the mean unexposed filter value is subtracted from the result for each exposed sample to obtain the best estimate of each element in the filter particulate material. A discrimination limit must be defined so that possible contributions from an individual filter are not falsely reported as being from the particulate material. Calculate the filter batch mean, F_m, and the standard deviation of the F_m values for each filter. If F_m is greater than the instrumental detection limit, then F_m must be subtracted from the total elemental content for each particulate bearing filter when the net metal in the particulate material is calculated. Determine the smallest atmospheric concentration of the element that can be reliably distinguished from the filter's contribution by multiplying the standard deviation for the filter batch by 3.3 and dividing by the average volume of air sampled, usually 1700 m^3. The resulting value will be the discrimination limit for that element.

12.2 Metal Concentration in Filter

12.2.1 Calculate the air volume sampled, corrected to EPA-reference conditions:

$$V_{std} = V_s \left(\frac{T_{std}}{T_m}\right)\left(\frac{P_{bar}}{P_{std}}\right)$$

where:

V_{std} = volume of ambient air sampled at EPA-reference conditions, m^3.
V_s = volume of ambient air pulled through the sampler, m^3.
T_{std} = absolute EPA-reference temperature, 298°K.
T_m = average ambient temperature, °K.
P_{bar} = barometric pressure during sampling measurement condition, mmHg.
P_{std} = EPA-reference barometric pressure, 760 mmHg.

12.2.2 Metal concentration in the air sample can then be calculated as follows:

$$C = (\mu g \text{ metal/mL})(40 \text{ mL/strip})(9) - F_m]/V_{std}$$

where:

C = concentration, μg metal/m^3.

μg metal/mL = metal concentration determined from Section 11.5.

40 mL/strip = total sample volume, mL.

$$\frac{\text{Useable filter area [20 cm x 23 cm (8" x 9")]}}{\text{Exposed area of one strip [2.5 cm x 20 cm (1" x 8")]}}$$

F_m = average concentration of blank filters, μg.

V_{std} = standard air volume pulled through filter, std m^3, (25°C and 760 mmHg).

12.3 Data and Record Keeping

12.3.1 General Information. The PDP-8 of the Thermo Jarrell Ash ICP spectrometer outputs elemental concentrations in micrograms per milliliter to the PDP-ll for storage and data analysis following each sample analysis. Project analysis periods may last from several days to a month or more, depending on the number of samples to analyze. Virtually all computations are performed by programs available on the PDP-ll. The following sections describe the various check samples and solutions analyzed to provide results against which to judge the validity of the real sample results. Anomalous data are studied for occurrence patterns or related events. Historical data, past experience, and additional statistical tests, as needed, contribute to the decision-making process. Interactive computer commands and sample printouts are supplied that enable the transmittal process to be performed, producing the data necessary for the validation procedures described in the remainder of this section.

12.3.2 Standard No. 1. All determinations of Standard No. 1 made during the analysis period are retrieved by the PDP-ll and the mean and standard deviation computed for each element. The latter is multiplied by 3.3 to determine the instrumental detection limit for each element. The detection limits are then compared with previous values to evaluate the instrument performance.

12.3.3 Solutions. The PDP-ll is used to compute the mean, standard deviation, and coefficient of variation for each element, with the high and low QC solutions each serving as an individual set. Recoveries are computed from these data by hand, and all results are examined and compared with previous results. Recoveries of reportable elements are usually 97 to 103%

12.3.4 Blank Filter Analysis Results. Blank filter strips are analyzed at random during the analysis period. The PDP-ll uses these data to produce files of mean blank values and discrimination limits for each element. These values should agree with values obtained during acceptance testing.

12.3.5 Sample-Replicate Data. Throughout an analysis period, blind replicates are interspersed with the real samples. Following analysis, the identities of the blinds are disclosed, and the PDP-ll compares the sample and replicate data. Typical precision values for some elements are shown in Table 3.

12.3.6 Quality Assurance Division Quality Control Strips. Single or multielement-spiked 1" x 8" strips must be analyzed at least once a day.

12.3.7 Operating Parameters. A daily instrument operating parameters log should be maintained. Such a record is invaluable for verifying past instrument performance if data are questioned and also potentially useful in investigating long-term instrument drift.

13. Quality Assurance (QA)

13.1 Instrumental Tuning and Standardization

13.1.1 The instrument must be tuned by the manufacturer at installation. However, the element lines should be checked periodically to determine if they have maintained their positions relative to the mercury profile line. Follow the manufacturer's instructions.

13.1.2 The Thermo Jarrell Ash Company published directions for performing instrument diagnostic checks and pertinent acceptable data limits (Ward, 1978, 1979 a, b, 1980 a, b). Diagnostic checks should be run periodically at a frequency dictated by the "goodness" of instrumental QC checks.

13.1.3 The instrument does not require an initial calibration except as noted in Section 11.3. Daily standardization is described in Section 11.5.

13.2 Calibration For Quantitative Analysis

See Sections 11.3 and 11.5.

13.3 Daily QA Check and Analytical Run Sequence

Data validation steps described in this section are primarily instrumental and do not guarantee extraction efficiency.

13.3.1 Real-Time Judgments: Standards, Gains, Offsets. This system requires virtually no data computations by the operator. However, the operator is required at several points to judge, based on historical experience, the validity of numbers generated and to decide whether to continue or stop. During the standardization, the operator must observe element response to determine if values are normal. The operator must watch for computer-generated messages reporting gains or offsets that exceed the tolerance limits. Proper corrective action is based on operator experience and is discussed in Section 14.5.

13.3.2 QC Solutions. Two QC solutions are analyzed alternately every tenth burn. Each of these two solutions contain all elements observed by the spectrometer. The PDP-ll stores expected values and a bandwidth determined by experience and makes the relevant comparison immediately upon receipt of the QC data. Any out-of-control response is immediately indicated on the CRT display. If all values are within the tolerance bank, the computer simply calls for the next sample. If some elements are out of control, the operator must use judgment to determine a course of action. If nearly all elements are out of control, the cause must be located. Usually this condition is caused by a partially plugged nebulizer. Unreported elements slightly out of control are usually ignored. When sources of error have been found and corrected, the instrument is either rechallenged with the QC solution or restandardized, and the 10 samples preceding the error are rerun. The original 10 sample analyses are later deleted from the PDP-ll by an editing routine.

13.3.3 General Quality Control. The general requirements from analysis using this method are summarized in Table 11.

13.4 Corrective Actions

13.4.1 The plasma must operate in a stable mode with a uniform sample feed rate. Failure to reproduce standards' responses or QC values usually is caused by a partially or totally plugged nebulizer. This condition may be verified by observing a decrease in the pump rate or the absence of a fog in the

nebulizer spray chamber. A similar effect will be observed if the argon supply pressure or the RF power should change. Experience with the sample pump and the RF power supply has been excellent, and both appear to be very stable electronically.

13.4.2 Intermittent failure of QC solutions to fall within the tolerance band may be due to an intermittent failure in a spectrometer circuit or to a broken nebulizer needle. Both are difficult to detect without extensive testing or dismantling of equipment. Leaks in the argon supply lines are also likely causes of such problems. Leaks in the ground-glass joints of the torch-spray chamber can be eliminated by the light use of a good grade stopcock grease (not silicone-base) (see Section 13.5).

13.4.3 One intended purpose of the repeated analysis of QC solutions was to detect and correct instrument drift occurring within any 1 day. Experience has shown that drift is not a problem when the instrument is standardized twice daily. When drift has been detected, it has been attributed to thermal drift and corrected by repro filing (i.e., adjusting the optical alignment). The instrument must be restandardized after profiling.

13.4.4 Long-term drift is more difficult to detect. A gradual increase in the gains of short-wavelength elements over a period of weeks or months is probably due to degradation of mirror coatings. Washing the mirrors may help in the short term, but usually they must be replaced. Mirrors may be ruined if washed improperly; manufacturer-approved procedures should be followed. Gradual degradation of electronic circuits will also cause long-term drift.

13.5 Routine Maintenance

13.5.1 The torch and spray chambers occasionally must be cleaned. Frequency of cleaning must be determined through experience, as a schedule and criteria have not been established. Ultrasonic the chambers in a hot detergent for at least 30 min, soak in aqua regia overnight, and rinse in deionized, distilled water.

[Note: Aqua regia is a strong oxidizing agent. Wear protective clothing and a face shield.]

13.5.2 The ground-glass joints of the torch-spray chamber should be greased with a good grade of non-silicone base stopcock grease. After reassembly, the torch must be optimized for maximum flux throughput according to manufacturer's instructions.

13.5.3 Should the plasma be extinguished during an analysis session, the session must be ended. Restandardization is necessary after the plasma is reignited. Restandardization must be delayed until the reflected power has been at a minimum for approximately 10 min.

14. Method Safety

The toxicity or carcinogenicity of each reagent used in this method has not been defined precisely; however, each chemical compound should be treated as a potential health hazard. The laboratory is responsible for maintaining a current awareness file of OSHA regulations regarding the safe handling of the chemicals specified in this method. A reference file of material handling data sheets should be made available to all personnel involved in the chemical analysis.

15. References

1. "Standard Operating Procedures for the ICP-DES Determination of Trace Elements in Suspended Particulate Matter Collected on Glass-Fiber Filters," EMSL/RTP-SOP-EMO-002, Revision, October, 1983.

2. "Reference Method for the Determination of Suspended Particulates in the Atmosphere (High Volume Method)," *Code of Federal Regulations*, Title 40, Part 50, Appendix B, pp. 12-16 (July 1, 1975).

3. "Reference Method for the Determination of Lead in Suspended Particulate Matter Collected from Ambient Air.," *Federal Register* 43 (194): 46262-3, 1978.

4. Rhodes, R. C., 1981, "Special Extractability Study of Whatman and Schleicher and Schuell Hi-Vol Filters," Memo to file, August 5, 1981, Quality Assurance Division, Environmental Monitoring Systems Laboratory, U. S. Environmental Protection Agency, Research Triangle Park NC.

5. Ward, A. F., *The Jarren-Ash Plasma Newsletter*, Volumes I, II, and III.

6. Nygaard, D., and Sot, J. J., "Determination Near the Detection Limit: A Comparison of Sequential and Simultaneous Plasma Emission Spectrometers," *Spectroscopy*, Vol. 3(4).

7. "Simplex Optimization of Multielement Ultrasonic Extraction of Atmospheric Particulates," Harper, et. al., *Analytical Chemistry*, Vol. 55(9), August 1983.

TABLE 1. CONCENTRATIONS OF THE MOST CONCENTRATED WORKING STANDARD,[1] TYPICAL ICP CALIBRATING SENSITIVITIES AND TYPICAL INSTRUMENTAL DETECTION LIMITS[2]

Element	Most Conc. Working Std., mg/L	Calibrating Sensitivity, counts/μg metal	Detection[3] Limit	
			mg/L	ng/m^3
Al	50.0	4,887	0.061	13.5
As	5.0	5,063	0.025	5.5
Au	5.0	11,683	0.009	1.9
B	10.0	42,892	0.030	6.6
Ba	10.0	13,430	0.003	0.7
Be	2.0	57,457	0.002	0.4
Bi	10.0	467	1.030	226.6
Ca	40.0	52,787	0.103	22.7
Cd	4.0	37,438	0.005	1.1
Ce	5.0	13,859	0.048	10.6
Co	5.0	2,787	0.015	3.3
Cr	4.0	76,772	0.012	2.6
Cu	20.0	159,213	0.010	2.2
Fe	50.0	16,985	0.034	7.5
Ge	5.0	1,645	0.079	17.5
Hg	5.0	9,031	0.055	12.1
In	5.0	520	0.081	18.5
K	20.0	253	0.205	45.1
La	2.0	44,468	0.007	1.5
Li	2.0	12,500	0.003	0.7
Mg	40.0	70,951	0.024	5.3
Mn	10.0	108,751	0.004	0.9
Mo	5.0	5,266	0.009	1.9
Na	80.0	186	inoperative	inoperative
Nb	2.0	59,859	0.11	2.4
Ni	5.0	4,306	0.014	3.1
P	20.0	2,941	0.104	22.9
Pb	25.0	10,324	0.032	7.0
Pd	5.0	7,996	0.130	7.0
Pt	5.0	847	0.107	23.5
Re	10.0	288	0.150	33.0
Rh	5.0	32,421	2.000	440.0
Ru	10.0	5,227	0.187	41.1
Sb	5.0	4,246	0.025	5.5
Se	5.0	930	0.156	34.3
Si	50.0	9,152	0.172	37.8
Sm	5.0	52,532	0.024	5.4
Sn	5.0	469	0.042	9.2
Sr	5.0	55,091	0.001	0.2
Ta	5.0	21,030	0.145	52.1
Te	5.0	4,676	0.021	4.6
Ti	5.0	58,777	0.003	0.7
Tl	5.0	3,063	0.152	33.4
V	5.0	107,250	0.007	1.5
W	5.0	1,170	0.057	12.5
Y	5.0	35,800	0.004	0.9
Zn	20.0	478	0.120	26.4
Zr	5.0	18,010	0.008	1.8

[1]The lease concentrated working standard contains no metals.
[2]Data source is 48 determinations of standard no.1 made from 01/26/83--03/22/83 during analysis of 1982 NAMS filters.
[3]Based upon sampling rate of 1.13 m^3/min for 24-hr for a total sample volume of 1627.2 m^3; factor of 9 for partial filter analysis; digestion of 0.040 L/filter.

TABLE 2. RECOVERIES FROM SPIKED STRIPS[1] AND FROM NIST SRM 1648

Element	% Recovery	%RSD
Spiked Strips[1]		
As	96.5	2.7
Co	95.5	3.4
Cu	76.1	4.3
Fe	98.3	3.7
Mn	96.9	4.0
Ni	96.4	3.9
Pb	99.1	1.9
Sr	96.4	4.4
V	94.0	2.1
Zn	89.4	6.2
NIST SRM 1648		
Ba	80	0.8
Be	not listed by NIST	
Cd	114	8.5
Cu	100	1.4
Fe	68	1.4
Mn	88	1.6
Mo	not listed by NIST	
Ni	90	9.0
Pb	95	1.1
V	79	1.9
Zn	97	3.8

[1]Recovery values based on X-ray florescence analytical values taken as "true".

TABLE 3. TYPICAL PRECISION, BIAS, AND CORRELATION COEFFICIENTS OBTAINED BY SAMPLE/REPLICATE PAIR ANALYSIS[1]

Element	Pairs Found	Coefficient Variation (%)	Coefficient Bias (%)	Coefficient
B	32	10	1.0	0.95
Ba	32	9	0	1.0
Cd	17	11	0	1.0
Cu	32	4	-1.0	1.0
Fe	32	8	1.0	0.99
Mn	32	21	5.0	0.99
Ni	14	10	-2.0	1.0
Pb	31	3	0.0	1.0
Sb	4	5	3.0	0.99
Sr	32	7	1.0	1.0
V	25	6	-1.0	1.0
Zn	31	16	-3.0	0.94

[1]Based on the analysis of 32 sample/replicate pairs of 1982 NAMS filters from 01/26/83 - 03/22/83. Because these data were obtained from real samples, there was no control over the actual concentrations. Elements displaying a large coefficient of variation tended to have mean concentrations in the lower end of the quantifiable range.

TABLE 4. ICP SPECTROMETER ELEMENTS WITH WAVELENGTHS

Element	Wavelength	Element	Wavelength
Al	308.22	Nb	316.34
As	193.76	Ni	231.60
Au	242.80	P	214.91
B	249.77	Pb	220.35
Ba	493.41	Pd	363.47
Be	313.04	Pt	265.95
Bi	195.33	Re	209.24
Ca	396.85	Rh	343.49
Cd	226.50	Ru	297.66
Ce	446.02	Sb	206.84
Co	228.62	Se	196.09
Cr	357.87	Si	288.16
Cu	324.75	Sm	442.43
Fe	259.94	Sn	189.99
Ge	199.82	Sr	407.77
Hg	253.65	Ta	240.06
In	230.69	Te	214.28
K	766.49	Ti	334.90
La	379.48	Tl	351.92
Li	670.78	V	292.40
Mg	279.55	W	202.99
Mn	257.61	Y	371.03
Mo	202.03	Zn	206.19
Na	589.00	Zr	339.20

TABLE 5A. PREPARATION OF WORKING STANDARD NO. 2 (EPA 2) FROM COMMERCIALLY PREPARED MULTIELEMENT STOCK

Component	Stock Conc., mg/L	Aliquot, mL	Working Std. Conc., mg/L
D.I. water	---	ca.50	---
HCl, 12.12 M		5.52	0.67 M
HNO_3, 15.95 M		1.85	0.33 M
EPA NC-2 containing		5.0	---
Ca	800	---	40
Cd	80	---	4
Co	100	---	5
Cu	400	---	20
Mg	800	---	40
Mn	200	---	10
Pb	500	---	25
Zn	400	---	20
D.I. water	---	dilute to 100	---

TABLE 5B. PREPARATION OF WORKING STANDARD NO. 2 (EPA 2) FROM SINGLE-ELEMENT, IN-HOUSE PREPARED STOCKS

Element	Stock Conc., mg/L	Aliquot, mL	Working Std. Conc., mg/L
Std. No.1	---	ca.200	---
HCl, 1.34 M		---	
Ca	4,000	5	40
Cd	400	5	4
Co	500	5	5
Cu	2,000	5	20
Mg	4,000	5	40
Mn	1,000	5	10
Pb	2,500	5	25
Zn	2,000	5	20
Std. No. 1 (mg/l)	---	dilute to 500	---

TABLE 6A. PREPARATION OF WORKING STANDARD NO. 3 (EPA 3) FROM COMMERCIALLY PREPARED MULTIELEMENT STOCK

Component	Stock Conc., mg/L	Aliquot, mL	Working Std. Conc., mg/L
D.I. water	---	ca 50	---
HCl, 12.12 M	4.52	0.67 M	
HNO_3, 15.95 M		1.95	0.33 M
EPA NC-3 containing	5.0	---	
Al	1000	---	50
Ba	200	---	10
Be	40	---	2
Fe	1000	---	50
Li	40	---	2
Mo	100	---	5
Na	1600	---	80
Ni	100	---	5
Sb	100	---	5
Sn	100	---	5
Sr	100	---	5
Ti	100	---	5
Tl	100	---	5
V	100	---	5
Zr	100	---	5
D.I. water	---	dilute to 100	---

TABLE 6B. PREPARATION OF WORKING STANDARD NO. 3 (EPA 3) FROM SINGLE-ELEMENT, IN-HOUSE PREPARED STOCKS

Element	Stock Conc., mg/L	Aliquot, mL	Working Std. Conc., mg/L
Std. No. 1	---	ca.200	---
Al	5,000	5	50
Ba	1,000	5	10
Be	500	2	2
Fe	5,000	5	50
Li	500	2	2
Mo	500	5	5
Na	10,000	4	80
Ni	500	5	5
Sb	500	5	5
Sn	500	5	5
Sr	500	5	5
Ti	500	5	5
Tl	500	5	5
V	500	5	5
Zr	500	5	5
Std. No. 1	---	dilute to 500	---

TABLE 7A. PREPARATION OF WORKING STANDARD NO. 4 (EPA 4) FROM COMMERCIALLY PREPARED MULTIELEMENT STOCK

Component	Stock Conc., mg/L	Aliquot, mL	Working Std. Conc., mg/L
D.I. water	---	ca 50	---
HCl, 12.12 M		5.52	0.67 M
HNO_3, 15.95 M		1.70	0.33 M
EPA NC-4A	5.0	5.0	---
containing	80	---	4
Cr	100	---	5
Se	100	---	5
Te		5.0	
EPA NC4B	100	---	5
containing	200	---	10
As	100	---	5
B	400	---	20
Ge	1000	---	50
P	---	dilute to 100	---
Si			
D.I. water			

TABLE 7B. PREPARATION OF WORKING STANDARD NO. 4 (EPA 4) FROM SINGLE-ELEMENT, IN-HOUSE PREPARED STOCKS

Element	Stock Conc., mg/L	Aliquot, mL	Working Std. Conc., mg/L
Std. No. 1	---	ca. 200	---
As	500	5	5
B	1,000	5	10
Cr	500	4	4
Ge	500	5	5
P	2,000	5	20
Se	500	5	5
Si	5,000	5	50
Te	500	5	5
Std. No. 1	---	dilute to 500	---

TABLE 8A. PREPARATION OF WORKING STANDARD NO. 5 (EPA 5) FROM COMMERCIALLY PREPARED MULTIELEMENT STOCK

Component	Stock Conc., mg/L	Aliquot, mL	Working Std. Conc., mg/L
D.I. water	---	ca. 50	---
HCl, 12.12 M		4.52	0.67 M
HNO_3, 15.95 M		1.95	0.33 M
NC-5A containing	5.0	---	
Nb	40	---	2
Ta	100	---	5
W	100	---	5
NC-58 containing	5.0		
Au	100	---	5
Bi	200	---	10
Ce	100	---	5
Hg	100	---	5
In	100	---	5
K	400	---	20
La	40	---	2
Pd	100	---	5
Pt	100	---	5
Re	200	---	10
Rh	100	---	5
Ru	200	---	10
Sm	100	---	5
Y	100	---	5
D.I. water	---	dilute to 100	---

TABLE 8B. PREPARATION OF WORKING STANDARD NO. 5 (EPA 5) FROM SINGLE-ELEMENT, IN-HOUSE PREPARED STOCKS

Element	Stock Conc., mg/L	Aliquot, mL	Working Std. Conc., mg/L
Std. No. 1	---	ca.200	---
HCl, 1.34 M	---	15	---
Au	500	5	5
Bi	1,000	5	10
Ce	500	5	5
Hg	500	5	5
In	500	5	5
K	2,000	5	20
La	500	5	2
Nb	500	5	2
Pd	500	5	5
Pt	500	5	5
Re	1,000	5	10
Rh	500	5	5
Ru	1,000	5	10
Sm	500	5	5
Ta	500	5	5
W	500	5	5
Y	500	5	5
Std. No. 1	---	dilute to 500	---

TABLE 9. HIGH QUALITY CONTROL SOLUTIONS: ALIQUOTS FROM SINGLE-ELEMENT STOCK STANDARDS (SEE APPENDIX A)

Element	Mixed Conc., mg/L	Stock Aliquot, mL	Element	Mixed Conc., mg/L	Aliquot, mL
Std. No. 1	---	ca.400			6
HCl, 1.34 M	---	32	Na	60	3
Al	40	8	Nb	1.5	8
As	4	8	Ni	4	8
Au	4	8	P	16	8
B	8	8	Pb	20	8
Ba	8	8	Pd	4	8
Be	1.5	3	Pt	4	8
Bi	8	8	Re	8	8
Ca	32	8	Rh	4	8
Cd	3	6	Ru	8	8
Ce	4	8	Sb	4	8
Co	4	8	Se	4	8
Cr	3	6	Si	40	8
Cu	16	8	Sm	4	8
Fe	40	8	Sn	4	8
Ge	4	8	Sr	4	8
Hg	4	8	Ta	4	8
In	4	8	Te	4	8
K	16	8	Ti	4	8
La	1.5	3	Tl	4	8
Li	1.5	3	V	4	8
Mg	32	8	W	4	8
Mn	8	8	Y	4	8
Mo	4	8	Zn	16	8
			Zr	4	8
			Std. No.1	---	dilute to one-liter

TABLE 10. CORRECTION FACTORS FOR SPECTRAL INTERFERENCES

Affected Element	Affecting Factor	Affected Element	Affecting Element	Factor	Element
Ta	0.0166	Co	Bi	0.0268	Rh
TA	0.0026	Fe	Bi	0.0116	Se
Al	0.0141	Ta	Bi	0.0041	Si
Al	0.0375	V	Bi	0.0125	Sr
B	0.0181	Zr	Ge	0.0071	Al
Be	0.0020	Nb	Ge	0.0015	Be
Be	0.0025	V	Ge	0.0085	Mo
Ce	0.2313	V	Ge	0.0293	Nb
Hg	0.0574	Co	Ge	0.1489	Ta
Hg	0.0151	Fe	P	0.0017	Al
La	0.0028	Fe	P	0.0265	Cu
La	0.0122	V	P	0.0016	Fe
Pb	0.1104	Nb	P	0.0032	Mg
Pd	0.0247	Nb	P	0.0100	Nb
Pd	0.1649	Sm	P	0.0017	Si
Pd	0.0125	Ti	P	0.0010	Zn
Pt	0.0600	Cr	Re	0.0240	Al
Pt	0.0175	Nb	Re	0.0110	B
Pt	0.1300	Ta	Re	0.1609	Mn
Pt	0.0210	V	Re	1.2400	Mo
Si	0.0281	Nb	Re	0.0556	Pd
Si	0.1300	Ta	Re	0.0044	Si
Si	0.2495	Zr	Re	0.2146	V
Te	0.0254	V	Ru	0.0141	Fe
Tl	0.0607	Ce	Ru	0.0843	Mn
Tl	0.0229	Zr	Ru	0.0233	Mo
Zn	0.0132	Ta	Ru	0.0827	Nb
As	0.0119	A1	Ru	0.2531	Ta
As	0.1736	Pt	Ru	0.0364	Ti
As	0.0125	V	Ru	5.5170	V
Bi	0.0083	A1	Ru	0.4996	Zr
Bi	0.0212	Cr	W	0.0021	Al
Bi	0.0065	Fe	W	0.0039	Mg
Bi	0.0326	La	W	0.0027	Zn
Bi	0.0155	Mg	As	0.0218	Ge
Bi	0.0312	Mn			

TABLE 11. REQUIRED QUALITY CONTROL REQUIREMENTS FOR ICP ANALYSIS

QC procedure	Typical frequency	Criteria
Initial calibration	At the beginning of the analysis	None
Initial calibration verification	Immediately after initial calibrations	90-110% of the actual concentration
Initial calibration blank	Immediately after initial calibration verification	Must be less than project detection limits
High standard verification	Following the initial calibration blank analysis	95-105% of the actual concentration
Interference check standard	Following the high standard verification, every 8 hours, and at the end of a run	80-120% of the actual concentration
Continuing calibration verification	Analyzed before the first sample, after every 10 samples, and at the end of the run	90-110% of the actual concentration
Continuing blank verification	Analyzed following each continuing calibration verification	Must be less than project detection limits
Method blank	1 per 20 samples, a minimum of 1 per batch	Must be less than project detection limits
Laboratory control spike	1 per 20 samples, a minimum of 1 per batch	80-120% recovery, with the exception of Ag and Sb
Duplicate and/or spike duplicate	1 per 10 samples per matrix type	RPD $\leq$ 20%
Matrix spike	1 per 10 samples per matrix type	Percent recovery of 75-125%
Serial dilution	1 per analysis per matrix type	90-110% of undiluted sample
Sample dilution	Dilute sample beneath the upper calibration limit and at least 5X the MDL	As needed

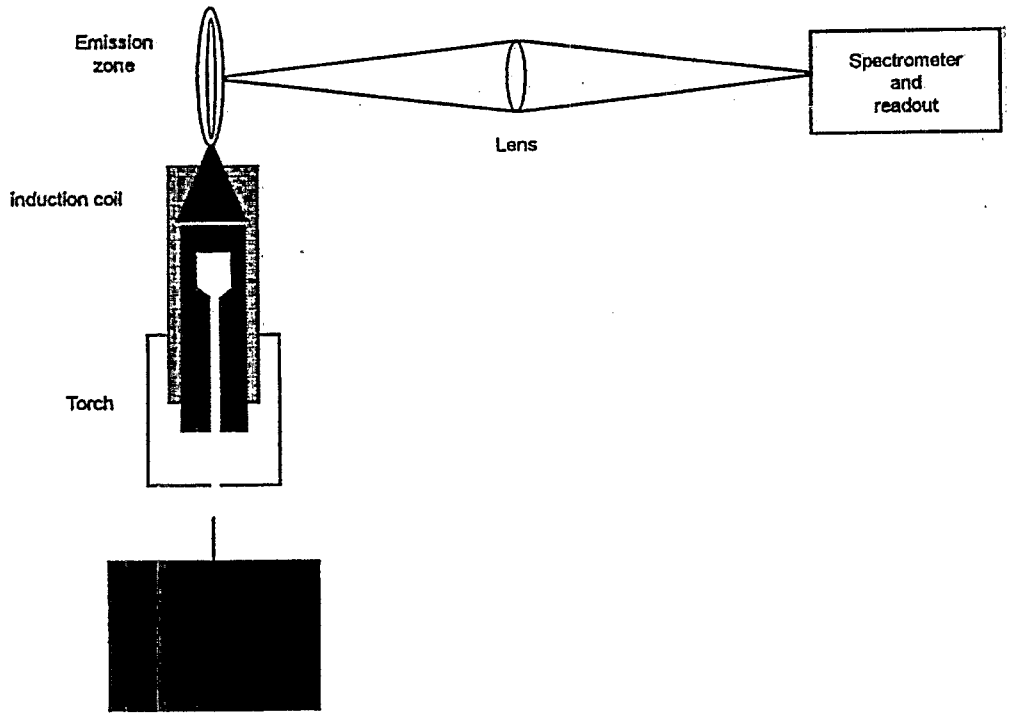

Figure 1. Schematic diagram of a typical inductively coupled plasma-optical emission spectroscopy instrument featuring parts of the instrument most important to the user.

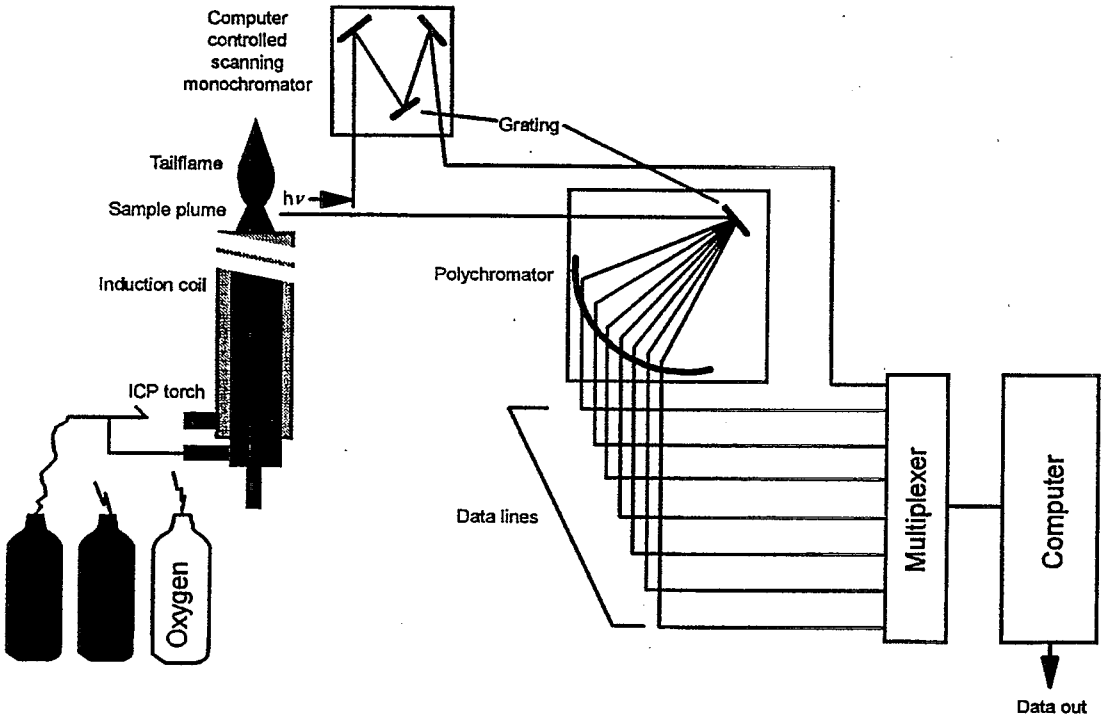

Figure 2. Simultaneous or sequential multi-element determination of trace elements by ICP.

JARRELL ASH PLASMA ATOMCOMP OPERATING PARAMETERS

Date: 3/11/80 Project: N82 Operator: XXX

Objective: NAMS Samples

Profile Setting: 594.4/587.7 Time Plasma On: 0735 Time of Stds: 0833

Observation Zone: 16 mm Settings-Auto: 5.96 Matchbox: 10.75

Time	mL	Sample uptake min	s⁻	ARGON Cool Rate	Nebul. LPM	psi	Power Fwd. kW	Ref. W	Comments
0830	2	1	4.6	1.86	18	16	1.1	13	Before stds.
0919	2	1	4.8	1.85	18	16	1.1	13	After 21 burns
0947	2	1	4.6	1.86	18	16	1.1	13	After 41 burns
1013	2	1	4.2	1.87	18	16	1.1	13	After 61 burns
1046	2	1	4.6	1.86	18	16	1.1	13	After 81 burns
1112	2	1	4.8	1.85	18	16	1.1	13	After 101 burns
1141	2	1	4.4	1.86	18	16	1.1	13	After 121 burns
1226	2	1	5.2	1.84	18	16	1.1	13	After 152 burns
End session									
1259	2	1	4.4	1.86	18	16	1.1	13	Before stds.
1346	2	1	4.4	1.86	18	16	1.1	13	After 21 burns
1413	2	1	4.6	1.86	18	16	1.1	13	After 41 burns
1439	2	1	4.2	1.87	18	16	1.1	13	After 61 burns
1505	2	1	4.8	1.85	18	16	1.1	13	After 81 burns
1530	2	1	4.4	1.86	18	16	1.1	13	After 101 burns
1556	2	1	4.2	1.87	18	16	1.1	13	After 121 burns
1632	2	1	4.6	1.86	18	16	1.1	13	After 150 burns
End session									302 burns today
Profile time									0826 1254
Meter Set Point									30 30
Micrometer Readings									649.1 645.2
									540.0 531.0
									690.0 640.1
Peak Location									539.4 530.0
Meter, Peak Reading									36.0 36.2

Figure 3. Typical ICP Operating Parameters Record.

EPA/625/R-96/010a

Compendium of Methods for the Determination of Inorganic Compounds in Ambient Air

Compendium Method IO-3.5

DETERMINATION OF METALS IN AMBIENT PARTICULATE MATTER USING INDUCTIVELY COUPLED PLASMA/ MASS SPECTROMETRY (ICP/MS)

Center for Environmental Research Information
Office of Research and Development
U.S. Environmental Protection Agency
Cincinnati, OH 45268

January 1997

Method IO-3.5

Acknowledgements

This Method is a part of *Compendium of Methods for the Determination of Inorganic Compounds in Ambient Air* (EPA/625/R-96/060a), which was prepared under Contract No. 68-C3-0315, WA No. 2-10, by Midwest Research Institute (MRI), as a subcontractor to Eastern Research Group, Inc. (ERG), and under the sponsorship of the U.S. Environmental Protection Agency (EPA). Justice A. Manning, Center for Environmental Research Information (CERI), and Frank F. McElroy, National Exposure Research Laboratory (NERL), both in the EPA Office of Research and Development, were the project officers responsible for overseeing the preparation of this method. Other support was provided by the following members of the Compendia Workgroup:

- James L. Cheney, Corps of Engineers, Omaha, NB
- Michael F. Davis, U.S. EPA, Region 7, KC, KS
- Joseph B. Elkins Jr., U.S. EPA, OAQPS, RTP, NC
- Robert G. Lewis, U.S. EPA, NERL, RTP, NC
- Justice A. Manning, U.S. EPA, ORD, Cincinnati, OH
- William A. McClenny, U.S. EPA, NERL, RTP, NC
- Frank F. McElroy, U.S. EPA, NERL, RTP, NC
- William T. "Jerry" Winberry, Jr., MRI, Cary, NC

This Method is the result of the efforts of many individuals. Gratitude goes to each person involved in the preparation and review of this methodology.

Author(s)

- William T. "Jerry" Winberry, Jr., MRI, Cary, NC

Peer Reviewers

- Doug Duckworth, Martin Marietta Energy Systems, Inc. Oak Ride, TN
- David Brant, West Virginia University, Morgantown, WV
- Jiansheng Wang, Midwest Research Institute, Kansas City, MO

DISCLAIMER

This Compendium has been subjected to the Agency's peer and administrative review, and it has been approved for publication as an EPA document. Mention of trade names or commercial products does not constitute endorsement or recommendation for use.

Method IO-3.5
Determination of Metals in Ambient Particulate Matter Using Inductively Coupled Plasma/Mass Spectrometry (ICP/MS)

TABLE OF CONTENTS

	Page
1. Scope	3.5-1
2. Applicable Documents	3.5-2
2.1 ASTM Standards	3.5-2
2.2 Other Documents	3.5-2
3. Summary of Method	3.5-2
4. Definitions	3.5-3
4.1 Instrument Detection Limit (IDL)	3.5-3
4.2 Method Detection Limit (MDL)	3.5-3
4.3 Linear Dynamic Range (LDR)	3.5-3
4.4 Laboratory Reagent Blank (LRB) (Preparation Blank)	3.5-3
4.5 Calibration Blank	3.5-3
4.6 Internal Standard	3.5-3
4.7 Stock Standards Solutions	3.5-3
4.8 Calibration Standard (CAL)	3.5-3
4.9 Tuning Solution	3.5-3
4.10 Laboratory Fortified Blank (LFB)	3.5-4
4.11 Laboratory Fortified Sample Matrix (LFM)	3.5-4
4.12 Quality Control Sample (QCS)	3.5-4
5. Interferences	3.5-4
5.1 Isobaric Elemental Interferences	3.5-4
5.2 Abundance Sensitivity	3.5-4
5.3 Isobaric Polyatomic Ion Interferences	3.5-5
5.4 Physical Interferences	3.5-5
5.5 Memory Interferences	3.5-5
6. Safety	3.5-6
7. Apparatus and Equipment	3.5-6
7.1 Inductively Coupled Plasma/Mass Spectrometer (ICP/MS)	3.5-6
7.2 Labware	3.5-6
7.3 Sample Processing Equipment	3.5-7
8. Reagents and Consumable Materials	3.5-7
8.1 Reagents	3.5-7
8.2 Water	3.5-8
8.3 Standard Stock Solutions	3.5-8
8.4 Multi-Element Stock Standard Solutions	3.5-10
8.5 Internal Standards Stock Solution, 1 mL = 100 μg	3.5-11
8.6 Blanks	3.5-11
8.7 Tuning Solution	3.5-11
8.8 Quality Control Sample (QCS)	3.5-11
8.9 Laboratory Fortified Blank (LFB)	3.5-11
9. Sample Receipt in the Laboratory	3.5-12
10. Calibration and Standardization	3.5-12
10.1 Calibration	3.5-12
10.2 Internal Standardization	3.5-12
10.3 Instrument Performance	3.5-13

TABLE OF CONTENTS (continued)

	Page
11. Quality Control (QC)	3.5-13
11.1 Laboratory	3.5-13
11.2 Initial Demonstration of Performance	3.5-13
11.3 Assessing Laboratory Performance--Reagent and Fortified Blanks	3.5-14
11.4 Assessing Analyte Recovery - Laboratory Fortified Sample Matrix	3.5-15
11.5 Internal Standards Responses	3.5-15
12. Procedure	3.5-16
13. Calculations	3.5-16
14. Precision and Accuracy	3.5-18
15. References	3.5-18

Chapter IO-3
Chemical Species Analysis of Filter-Collected SPM

Method IO-3.5
DETERMINATION OF METALS IN AMBIENT PARTICULATE MATTER USING INDUCTIVELY COUPLED PLASMA/MASS SPECTROMETRY

1. Scope

1.1 Suspended particulate matter (SPM) in air generally is a complex multi-phase system of all airborne solid and low vapor pressure liquified particles having aerodynamic particles sizes from below 0.01-100 μm and larger. Historically, SPM measurement has concentrated on total suspended particulates (TSP), with no preference to size selection.

1.2 On July 1, 1987, the U. S. Environmental Protection Agency (EPA) promulgated a new size-specific air quality standard for ambient particulate matter. This new primary standard applies only to particles with aerodynamic diameters $\leq$10 μm (PM_{10}) and replaces the original standard for TSP. To measure concentrations of these particles, the EPA also promulgated a new federal reference method (FRM). This method is based on the separation and removal of non-PM_{10} particles from an air sample, followed by filtration and gravimetric analysis of PM_{10} mass on the filter substrate.

1.3 The new primary standard (adopted to protect human health) limits PM_{10} concentrations to 150 μg/std m^3, averaged over a 24-h period. These smaller particles are able to reach the lower regions of the human respiratory tract and, therefore, are responsible for most of the adverse health effects associated with suspended particulate pollution. The secondary standard, used to assess the impact of pollution on public welfare, has also been established at 150 μg/std. m^3.

1.4 Ambient air SPM measurements are used (among other purposes) to determine whether defined geographical areas are in attainment or non-attainment with the national ambient air quality standards (NAAQS) for PM_{10}. These measurements are obtained by the states in their state local air monitoring station (SLAMS) networks as required under 40 CFR Part 58. Further, Appendix C of Part 58 requires that the ambient air monitoring methods used in these EPA-required SLAMS networks must be methods that have been designated by EPA as either reference or equivalent methods.

1.5 The procedure for analyzing the elemental metal components in ambient air particulate matter collected on high volume filter material is described in this method. The high volume filter material may be associated with either the TSP or PM_{10} sampler, as delineated in Inorganic Compendium Method IO-2.1.

1.6 Filters are numbered, pre-weighted, field deployed and sampled, returned to the laboratory, extracted using microwave or hot acid, then analyzed by inductively coupled plasma/mass spectrometry (ICP/MS). The extraction procedure is accomplished by following Inorganic Compendium Method IO-3.1. Those metals and their associated method detection limit (MDL) applicable to this technology are listed in Table 1.

1.7 This method should be used by analysts experienced in the use of ICP/MS, the interpretation of spectral and matrix interferences and procedures for their correction. A minimum of 6-months' experience with commercial instrumentation is required.

2. Applicable Documents

2.1 ASTM Standards

- D1356 *Definition of Terms Related to Atmospheric Sampling and Analysis.*
- D1357 *Planning the Sampling of the Ambient Atmosphere.*
- D4096 *Application of the High Volume Sample Method for Collection and Mass Determination of Airborne Particle Matter.*

2.2 Other Documents

- U. S. Environmental Protection Agency, *Quality Assurance Handbook for Air Pollution Measurement Systems, Volume I: A Field Guide for Environmental Quality Assurance,* EPA-600/R-94-038a.
- U. S. Environmental Protection Agency, *Quality Assurance Handbook for Air Pollution Measurement Systems, Volume II: Ambient Air Specific Methods (Interim Edition),* EPA-600/R-94/038b.
- Reference Method for the Determination of Particulate Matter in the Atmosphere, *Code of Federal Regulations*. 40 CFR 50, Appendix J.
- Reference Method for the Determination of Suspended Particulates in the Atmosphere (High Volume Method), *Code of Federal Regulations*. 40 CFR 50, Appendix B.
- Reference Method for the Determination of Lead in Suspended Particulate Matter Collected from Ambient Air, *Federal Register* 43 (194): 46258-46261.
- U. S. EPA Project Summary Document (1).
- U. S. EPA Laboratory Standard Operating Procedures (2).
- Scientific Publications of Ambient Air Studies (3-14).

3. Summary of Method

3.1 The method describes the multi-element determination of trace elements by ICP/MS. Sample material in solution is introduced by pneumatic nebulization into a radiofrequency plasma where energy transfer processes cause desolvation, atomization, and ionization.

3.2 The ions are extracted from the plasma through a differentially pumped vacuum interface and separated on the basis of their mass-to-charge ratio by a quadruple mass spectrometer having a minimum resolution capability of 1 amu peak width at 5% peak height.

3.3 The ions transmitted through the quadruple are registered by a continuous dynode electron multiplier or Faraday detector and the ion information processed by a data handling system.

3.4 Interferences relating to the technique (see Section 5) must be recognized and corrected for. Such corrections must include compensation for isobaric elemental interferences and interferences from polyatomic ions derived from the plasma gas, air, reagents, or sample matrix. Instrumental drift as well as suppressions or enhancements of instrument response caused by the sample matrix must be corrected for by internal standardization.

4. Definitions

[Note: Definitions used in this document are consistent with ASTM methods. All pertinent abbreviations and symbols are defined within this document at point of use.]

4.1 Instrument Detection Limit (IDL). The concentration equivalent of the analyte signal, which is equal to three times the standard deviation of the blank signal at the selected analytical mass(es).

4.2 Method Detection Limit (MDL). The minimum concentration of an analyte that can be identified, measured and reported with 99% confidence that the analyte concentration is greater than zero. MDLs are intended as a guide to instrumental limits typical of a system optimized for multi-element determinations and employing commercial instrumentation and pneumatic nebulization sample introduction. However, actual MDLs and linear working ranges will be dependent on the sample matrix, instrumentation and selected operating conditions.

4.3 Linear Dynamic Range (LDR). The concentration range over which the analytical working curve remains linear.

4.4 Laboratory Reagent Blank (LRB) (Preparation Blank). An aliquot of reagent water that is treated exactly as a sample including exposure to all labware, equipment, solvents, reagents, and internal standards that are used with other samples. The LRB is used to determine if method analytes or other interferences are present in the laboratory environment, the reagents or apparatus.

4.5 Calibration Blank. A volume of ASTM Type I water acidified with the same acid matrix as is present in the calibration standards.

4.6 Internal Standard. Pure analyte(s) added to a solution in known amount(s) and used to measure the relative responses of other method analytes that are components of the same solution. The internal standard must be an analyte that is not a sample component.

4.7 Stock Standards Solutions. A concentrated solution containing one or more analytes prepared in the laboratory using assayed reference compounds or purchased from a reputable commercial source.

4.8 Calibration Standard (CAL). A solution prepared from the stock standard solution(s) which is used to calibrate the instrument response with respect to analyte concentration.

4.9 Tuning Solution. A solution used to determine acceptable instrument performance prior to calibration and sample analyses.

4.10 Laboratory Fortified Blank (LFB). An aliquot of reagent water to which known quantities of the method analytes are added in the laboratory. The LFB is analyzed exactly like a sample, and its purpose is to determine whether method performance is within accepted control limits.

4.11 Laboratory Fortified Sample Matrix (LFM). An aliquot of an environmental sample to which known quantities of the method analytes are added in the laboratory. The LFM is analyzed exactly like a sample, and its purpose is to determine whether the sample matrix contributes bias to the analytical results. The background concentrations of the analytes in the sample matrix must be determined in a separate aliquot and the measured values in the LFM corrected for the concentrations found.

4.12 Quality Control Sample (QCS). A solution containing known concentrations of method analytes which is used to fortify an aliquot of LRB matrix. The QCS is obtained from a source external to the laboratory and is used to check laboratory performance.

5. Interferences

[Note: Several interference sources may cause inaccuracies in the determination of trace elements by ICP/MS.]

5.1 Isobaric Elemental Interferences

Isobaric elemental interferences are caused by isotopes of different elements that form single- or double-charged ions of the same nominal mass-to-charge ratio and cannot be resolved by mass spectrometer in use. All elements determined by this method have, at a minimum, one isotope free of isobaric elemental interference. Of the analytical isotopes recommended for use with this method, only molybdenum-98 (ruthenium) and selenium-82 (krypton) have isobaric elemental interferences. If alternative analytical isotopes having higher natural abundance are selected to achieve greater sensitivity, an isobaric interference may occur. All data obtained under such conditions must be corrected by measuring the signal from another isotope of the interfering element and subtracting the appropriate signal ratio from the isotope of interest. A record of this correction process should be included with the report of the data. These corrections will only be as accurate as the accuracy of the isotope ratio used in the elemental equation for data calculations. Relevant isotope ratios and instrument bias factors should be established prior to the application of any corrections.

5.2 Abundance Sensitivity

Abundance sensitivity is a property defining the degree to which the wings of a mass peak contribute to adjacent masses. The abundance sensitivity is affected by ion energy and quadruple operating pressure. Wing overlap interferences may result when a small ion peak is being measured adjacent to a large one. The potential for these interferences should be recognized and the spectrometer resolution adjusted to minimize them.

5.3 Isobaric Polyatomic Ion Interferences

Isobaric polyatomic ion interferences are caused by ions consisting of more than one atom that have the same nominal mass-to-charge ratio as the isotope of interest and that cannot be resolved by the mass spectrometer in use. These ions are commonly formed in the plasma or interface system from support gases or sample components. Most of the common interferences have been identified and are listed in Table 2, together with the method elements affected. Such interferences must be recognized, and when they cannot be avoided by the selection of alternative analytical isotopes, appropriate corrections must be made to the data. Equations for the correction of data should be established at the time of the analytical run sequence as the polyatomic ion interferences will be highly dependent on the sample matrix and chosen instrument conditions.

5.4 Physical Interferences

Physical interferences are associated with the physical processes that govern the transport of sample into the plasma, sample conversion processes in the plasma, and the transmission of ions through the plasma-mass spectrometer interface. These interferences may result in differences between instrument responses for the sample and the calibration standards. Physical interferences may occur in the transfer of solution to the nebulizer (e.g., viscosity effects), at the point of aerosol formation and transport to the plasma (e.g., surface tension), or during excitation and ionization processes within the plasma itself. High levels of dissolved solids in the sample may contribute deposits of material on the extraction and/or skimmer cones reducing the effective diameter of the orifices and therefore ion transmission. Internal standardization may be effectively used to compensate for many physical interference effects. Internal standards ideally should have similar analytical behavior to the elements being determined.

5.5 Memory Interferences

Memory interferences result when isotopes of elements in a previous sample contribute to the signals measured in a new sample. Memory effects can result from sample deposition on the sampler and skimmer cones and from the buildup of sample material in the plasma torch and spray chamber. The site where these effects occur is dependent on the element and can be minimized by flushing the system with a rinse blank between samples (see Section 8.6.3). The possibility of memory interferences should be recognized within an analytical run and suitable rinse times should be used to reduce them. The rinse times necessary for a particular element should be estimated prior to analysis. This estimate may be calculated by aspirating a standard containing elements corresponding to 10 times the upper end of the linear range for a normal sample analysis period, followed by analysis of the rinse blank at designated intervals. The length of time required to reduce analyte signals to within a factor of 10 of the method detection limit, should be noted. Memory interferences may also be assessed within an analytical run by using a minimum of three replicate integrations for data acquisition. If the integrated signal values drop consecutively, the analyst should be alerted to the possibility of a memory effect and should examine the analyte concentration in the previous sample to identify if this was high. If a memory interference is suspected, the sample should be reanalyzed after a long rinse period.

6. Safety

6.1 The toxicity or carcinogenicity of reagents used in this method have not been fully established. Each chemical should be regarded as a potential health hazard, and exposure to these compounds should be as low as reasonably achievable. Each laboratory is responsible for maintaining a current awareness file of OSHA regulations regarding the safe handling of the chemicals specified in this method. A reference file of material data handling sheets should also be available to all personnel involved in the chemical analyses.

6.2 Analytical plasma sources emit radiofrequency radiation in addition to intense UV radiation. Suitable precautions should be taken to protect personnel from such hazards.

7. Apparatus and Equipment

7.1 Inductively Coupled Plasma/Mass Spectrometer (ICP/MS)

7.1.1 ICP/MS Instrument. Capable of scanning the mass 5-250 amu with a minimum resolution capability of 1 amu peak width at 5% peak height. Instrument may be fitted with a conventional or extended dynamic range detection system.

7.1.2 Argon Gas Supply (high-purity grade, 99.99%). Best source.

7.1.3 A Variable-Speed Peristaltic Pump. Required for solution delivery to the nebulizer.

7.1.4 A Mass-Flow Controller. On the nebulizer gas supply is required. A water-cooled spray chamber may reduce some types of interferences (e.g., from polyatomic oxide species).

7.1.5 Operating Conditions. Because of the diversity of instrument hardware, no detailed instrument operating conditions are provided. The analyst is advised to follow the recommended operating conditions provided by the manufacturer. The analyst must verify that the instrument configuration and operating conditions satisfy the analytical requirements and maintain quality control data verifying instrument performance and analytical results. Instrument operating conditions used to generate precision and recovery data for this method (Section 14) are included in Table 3.

7.1.6 Electron Multiplier Detector. If an electron multiplier detector is being used, precautions should be taken, where necessary, to prevent exposure to high ion flux. Otherwise, changes in instrument response or damage to the multiplier may result. Samples having high concentrations of elements beyond the linear range of the instrument and with isotopes falling within scanning windows should be diluted prior to analysis.

7.2 Labware

To determine trace level elements, contamination and loss are of prime consideration. Potential contamination sources include improperly cleaned laboratory apparatus and general contamination within the laboratory environment from dust, etc. A clean laboratory work area designated for trace element sample handling must be used. Sample containers can introduce positive and negative errors in the determination of trace elements by (1) contributing contaminants through surface desorption or leaching

and (2) depleting element concentrations through adsorption processes. All reusable labware (glass, quartz, polyethylene, Teflon®, etc.), including the sample container, should be cleaned prior to use. Labware may be soaked overnight and thoroughly washed with laboratory-grade detergent and water, rinsed with water, and soaked for 4 h in a mixture of dilute nitric and hydrochloric acid (1+2+9). It should then be rinsed with ASTM type I water and oven-dried.

[Note: Do not use chromic acid to clean glassware.]

7.2.1 Glassware. Volumetric flasks, graduated cylinders, funnels and centrifuge tubes.

7.2.2 Assorted Calibrated Pipettes. Dust sources.

7.2.3 Conical Phillips Beakers, 350-mL with 50-mm Watch Glasses. Griffin beakers, 350-mL with 75-mm watch glasses.

7.2.4 Storage Bottles. Narrow mouth bottles, Teflon® FEP (fluorinated ethylene propylene) with Tefzel ETFE (ethylene tetrafluorethylene) screw closure, 125-mL and 250-mL capacities.

7.3 Sample Processing Equipment

7.3.1 Air Displacement Pipetter. Digital pipet system capable of delivering volumes from 10 to 2,500 μL with an assortment of high quality disposable pipet tips.

7.3.2 Balance. Analytical, capable of accurately weighing to 0.1 mg.

7.3.3 Hot Plate. (Corning PC100 or equivalent).

7.3.4 Centrifuge. Steel cabinet with guard bowl, electric timer and brake.

7.3.5 Drying Oven. Gravity convection oven with thermostatic control capable of maintaining 105°C ± 5°C.

8. Reagents and Consumable Materials

8.1 Reagents

[Note: Owing to the high sensitivity of ICP/MS, high-purity reagents should be used whenever possible. All acids used for this method must be of ultra high-purity grade. Suitable acids are available from a number of manufacturers or may be prepared by sub-boiling distillation. Nitric acid is preferred for ICP/MS to minimize polyatomic ion interferences. Several polyatomic ion interferences result when hydrochloric acid is used (see Table 2). However, hydrochloric acid is required to maintain stability in solutions containing antimony and silver. When hydrochloric acid is used, corrections for the chloride polyatomic ion interferences must be applied to all data.]

8.1.1 Nitric Acid, Concentrated (sp.gr. 1.41). Best source.

8.1.2 Nitric Acid (1+1). Add 500 mL conc. nitric acid to 400 mL of ASTM type I water and dilute to 1 L.

8.1.3 Nitric Acid (1+9). Add 100 mL conc. nitric acid to 400 mL of ASTM type I water and dilute to 1 L.

8.1.4 Hydrochloric Acid, Concentrated (sp.gr. 1.19). Best source.

8.1.5 Hydrochloric Acid (1+1). Add 500 mL conc. hydrochloric acid to 400 mL of ASTM type I water and dilute to 1 L.

8.1.6 Hydrochloric Acid (1+4). Add 200 mL conc. hydrochloric acid to 400 mL of ASTM type I water and dilute to 1 L.

8.1.7 Ammonium Hydroxide, Concentrated (sp.gr. 0.902). Best source.

8.1.8 Tartaric Acid (CASRN 87-69-4). Best source.

8.2 Water

For all sample preparation and dilutions, ASTM type I water (ASTM D1193) is required. Suitable water may be prepared by passing distilled water through a mixed bed of anion and cation exchange resins.

8.3 Standard Stock Solutions

Standard stack solutions may be purchased from a reputable commercial source or prepared from ultra high-purity grade chemicals or metals (99.99 - 99.999% pure). All salts should be dried for 1 h at 105°C, unless otherwise specified. Stock solutions should be stored in Teflon® bottles. Use the following procedures for preparing standard stock solutions:

Caution: Many metal salts are extremely toxic if inhaled or swallowed. Wash hands thoroughly after handling.

[Note: Some metals, particularly those that form surface oxides, require cleaning prior to being weighed, which requires pickling the surface of the metal in acid. An amount in excess of the desired weight should be pickled repeatedly, rinsed with water, dried, and weighed until the desired weight is achieved.]

8.3.1 Aluminum Solution, Stock. 1 mL = 1,000 μg Al: Pickle aluminum metal in warm (1+1) HCl to an exact weight of 0.100 g. Dissolve in 10 mL conc. HCl and 2 mL conc. nitric acid, heat to dissolve. Continue heating until volume is reduced to 4 mL. Cool and add 4 mL ASTM type I water. Heat until the volume is reduced to 2 mL. Cool and dilute to 100 mL with ASTM type I water.

8.3.2 Antimony Solution, Stock. 1 mL = 1,000 μg Sb: Dissolve 0.100 g antimony powder in 2 mL (1+1) nitric acid and 0.5 mL conc. hydrochloric acid, heat to dissolve. Cool and add 20 mL ASTM type I water and 0.15 g tartaric acid. Warm the solution to dissolve the white precipitate. Cool and dilute to 100 mL with ASTM type I water.

8.3.3 Arsenic Solution, Stock. 1 mL = 1,000 μg As: Dissolve 0.1320 g As_2O_3 in a mixture of 50 mL ASTM type I water and 1 mL conc. ammonium hydroxide. Heat gently to dissolve. Cool and acidify the solution with 2 mL conc. nitric acid. Dilute to 100 mL with ASTM type I water.

8.3.4 Barium Solution, Stock. 1 mL = 1,000 μg Ba: Dissolve 0.1437 g $BaCO_3$ in a solution mixture of 10 mL ASTM type I water and 2 mL conc. nitric acid. Heat and stir to dissolve and degassing. Dilute to 100 mL with ASTM type I water.

8.3.5 Beryllium Solution, Stock. 1 mL = 1,000 μg Be: Dissolve 1.965 g $BeSO_4 \cdot 4H_2O$ (DO NOT DRY) in 50 mL ASTM Type I water. Add 1 mL conc. nitric acid. Dilute to 100 mL with ASTM type I water.

8.3.6 Bismuth Solution, Stock. 1 mL = 1,000 μg Bi: Dissolve 0.1115 g Bi_2O_3 in 5 mL conc. nitric acid. Heat to dissolve. Cool and dilute to 100 mL with ASTM type I water.

8.3.7 Cadmium Solution, Stock. 1 mL = 1,000 μg Cd: Pickle cadmium metal in (1+9) nitric acid to an exact weight of 0.100 g. Dissolve in 5 mL (1+1) nitric acid, heating to dissolve. Cool and dilute to 100 mL wit ASTM type I water.

8.3.8 Chromium Solution, Stock. 1 mL = 1,000 μg Cr: Dissolve 0.1923 g CrO_3 in a solution mixture of 10 mL ASTM type I water and 1 mL conc. nitric acid. Dilute to 100 mL with ASTM type I water.

8.3.9 Cobalt Solution, Stock. 1 mL = 1,000 μg Co: Pickle cobalt metal in (1+9) nitric acid to an exact weight of 0.100 g. Dissolve in 5 mL (1+1) nitric acid, heating to dissolve. Cool and dilute to 100 mL with ASTM type I water.

8.3.10 Copper Solution, Stock. 1 mL = 1,000 μg Cu: Pickle copper metal in (1+9) nitric acid to an exact weight of 0.100 g. Dissolve in 5 mL (1+1) nitric acid, heating to dissolve. Cool and dilute to 100 mL with ASTM type I water.

8.3.11 Indium Solution, Stock. 1 mL = 1,000 μg In: Pickle indium metal in (1+1) nitric acid to an exact weight of 0.100 g. Dissolve in 10 mL (1+1) nitric acid, heating to dissolve. Cool and dilute to 100 mL with ASTM type I water.

8.3.12 Lead Solution, Stock. 1 mL = 1,000 μg Pb: Dissolve 0.1599 g $PbNO_3$ in 5 mL (1+1) nitric acid. Dilute to 100 mL with ASTM type I water.

8.3.13 Magnesium Solution, Stock. 1 mL = 1,000 μg Mg: dissolve 0.1658 g MgO in 10 mL (1+1) nitric acid, heating to dissolve. Cool and dilute to 100 mL with ASTM type I water.

8.3.14 Manganese Solution, Stock. 1 mL = 1,000 μg Mn: Pickle manganese flake in (1+9) nitric acid to an exact weight of 0.100 g. Dissolve in 5 mL (1+1) nitric acid, heating to effect solution. Cool and dilute to 100 mL with ASTM type I water.

8.3.15 Molybdenum Solution, Stock. 1 mL = 100 μg Mo: Dissolve 0.1500 g MoO_3 in a solution mixture of 10 mL ASTM type I water and 1 mL conc. ammonium hydroxide, heating to dissolve and 1 mL conc. ammonium hydroxide, heating to effect solution. Cool and dilute to 100 mL with ASTM type I water.

8.3.16 Nickel Solution, Stock. 1 mL = 1,000 μg Ni: Dissolve 0.100 g nickel powder in 5 mL conc. nitric acid, heating to dissolve. Cool and dilute to 100 mL with ASTM type I water.

8.3.17 Scandium Solution, Stock. 1 mL = 1,000 μg Sc: Dissolve 0.1534 g sc_2O_3 in 5 mL (1+1) nitric acid, heating to dissolve. Cool and dilute to 100 mL ASTM type I water.

8.3.18 Selenium Solution, Stock. 1 mL = 1,000 μg Se: Dissolve 0.1405 g SeO_2 in 20 mL ASTM type I water. Dilute to 100 mL with ASTM type I water.

8.3.19 Silver Solution, Stock. 1 mL = 100 μg Ag: Dissolve 0.100 g silver metal in 5 mL (1+1) nitric acid, heating to dissolve. Cool and dilute to 100 mL with ASTM type I water. Store in dark container.

8.3.20 Terbium Solution, Stock. 1 mL = 1,000 μg Tb: Dissolve 0.1176 g Tb_4O_7 in 5 mL conc. nitric acid, heating to dissolve. Cool and dilute to 100 mL with ASTM type I water.

8.3.21 Thallium Solution, Stock. 1 mL = 1,000 μg T1: Dissolve 0.1303 g $TlNO_3$ in a solution mixture of 10 mL ASTM type I water and 1 mL conc. nitric acid. Dilute to 100 mL with ASTM type I water.

8.3.22 Thorium Solution, Stock. 1 mL = 1,000 μg Th: Dissolve 0.2380 g $Th(NO_3)_4 \cdot 4H_2O$ (DO NOT DRY) in 20 mL ASTM type I water. Dilute to 100 mL with ASTM type I water.

8.3.23 Uranium Solution, Stock. 1 mL = 1,000 μg U: Dissolve 0.2110 g $UO_2(NO_3)_2 \cdot 6H_2O$ (DO NOT DRY) in 20 mL ASTM type I water and dilute to 100 mL with ASTM type I water.

8.3.24 Vanadium Solution, Stock. 1 mL = 1,000 μg V: Pickle vanadium metal in (1+9) nitric acid to an exact weight of 0.100 g. Dissolve in 5 mL (1+1) nitric acid, heating to dissolve. Cool and dilute to 100 mL with ASTM type I water.

8.3.25 Yttrium Solution, Stock. 1 mL = 1,000 μg Y: Dissolve 0.1270 g Y_2O_3 in 5 mL (1+1) nitric acid, heating to dissolve. Cool and dilute to 100 mL with ASTM type I water.

8.3.26 Zinc Solution, Stock. 1 mL = 1,000 μg Zn: Pickle zinc metal in (1+9) nitric acid to an exact weight of 0.100 g. Dissolve in 5 mL (1+1) nitric acid, heating to effect solution. Cool and dilute to 100 mL with ASTM type I water.

8.4 Multi-Element Stock Standard Solutions

Care must be taken in the preparation of multi-element stock standards so that the elements are compatible and stable. Originating element stocks should be checked for impurities that might influence the accuracy of the standard. Freshly prepared standards should be transferred to acid-cleaned, not previously used FEP fluorocarbon bottles for storage and monitored periodically for stability. Suggested element combinations are:

Standard Solution A		Standard Solution B
Aluminum	Manganese	Barium
Antimony	Molybdenum	Silver
Arsenic	Nickel	
Beryllium	Selenium	
Cadmium	Thallium	
Chromium	Thorium	
Cobalt	Uranium	
Copper	Vanadium	
Lead	Zinc	

Multi-element stock standard solutions A and B (1 mL = 10 μg) may be prepared by diluting 1 mL of each single element stock in the combination list to 100 mL with ASTM type I water containing 1% (v/v) nitric acid.

Fresh multi-element calibration standards should be prepared every 2 weeks, or as needed. Dilute each of the stock multi-element standard solutions A and B to levels appropriate to the operating range of the instrument using ASTM type I water containing 1% (v/v) nitric acid. The element concentrations in the standards should be sufficiently high to produce good measurement precision and to accurately define the slope of the response curve. Concentrations of 200 μg/L are suggested. If the direct addition procedure and internal standards (see Section 8.5) to the calibration standards are being used, store in Teflon® bottles. Calibration standards should be verified initially using a quality control sample (see Section 8.8).

8.5 Internal Standards Stock Solution, 1 mL = 100 μg

Dilute 10 mL of scandium, yttrium, indium, terbium and bismuth stock standards (Section 8.3) to 100 mL with ASTM type I water and store in Teflon® bottle. Use this solution concentrate to add to blanks, calibration standards, and samples or dilute by an appropriate amount using 1% (v/v) nitric acid, if the internal standards are being added by peristaltic pump.

8.6 Blanks

Three types of blanks are required for this method. A calibration blank establishes the analytical calibration curve. The laboratory reagent blank assesses possible contamination from the sample preparation procedure and spectral background. The rinse blank flushes the instrument between samples to reduce memory interferences.

8.6.1 Calibration blank consists of 1% (v/v) nitric acid in ASTM type I water. If the direct addition procedure is being used, add internal standards.

8.6.2 Laboratory reagent blank (LRB) must contain all the reagents in the same volumes as used in processing the samples. The LRB must be carried through the entire sample digestion and preparation scheme. If the direct addition procedure is being used, add internal standards to the solution after preparation is complete.

8.6.3 Rinse blank consists of 2% (v/v) nitric acid in ASTM type I water.

8.7 Tuning Solution

This solution is used for instrument tuning and mass calibration prior to analysis. The solution is prepared by mixing beryllium, magnesium, cobalt, indium and lead stock solutions (see Section 8.3) in 1% (v/v) nitric acid to produce a concentration of 100 μg/L of each element. Internal standards are not added to this solution.

8.8 Quality Control Sample (QCS)

The QCS should be obtained from a source outside the laboratory. Dilute an appropriate aliquot of analytes (concentrations not to exceed 1,000 μg/L) in 1% (v/v) nitric acid. If the direct addition procedure is being used, add internal standards after dilution, mix, and store in a Teflon® bottle.

8.9 Laboratory Fortified Blank (LFB)

To an aliquot of LRB, add aliquots from multi-element stock standards A and B (see Section 8.4) to produce a final concentration of 100 μg/L for each analyte. The LFB must be carried through the entire sample digestion and preparation scheme. If the direct addition procedure is being used, add internal standards to this solution after preparation.

9. Sample Receipt in the Laboratory

9.1 The sample should be received from the extraction laboratory in a 10-mL flask and diluted to the mark, as documented in Inorganic Compendium Method IO-3.1.

9.2 No additional preservation is needed at this time. Sample is ready for ICP/MS analysis.

10. Calibration and Standardization

10.1 Calibration

[Note: Demonstration and documentation of acceptable initial calibration is required before samples are analyzed and periodically throughout sample analysis as dictated by results of continuing calibration checks. After initial calibration is successful, a calibration check is required at the beginning and end of each period during which analyses are performed and at requisite intervals.]

10.1.1 Allow a period of not less than 30 min for instrument warm up. During this process, conduct mass calibration and resolution checks using the tuning solution. Resolution at low mass is indicated by magnesium isotopes 24, 25, and 26. Resolution at high mass is indicated by lead isotopes 206, 207, and 208. For good performance, adjust spectrometer resolution to produce a peak width of approximately 0.75 amu at 5% peak height. Adjust mass calibration if it has shifted by more than 0.1 amu from unit mass.

10.1.2 Instrument stability must be demonstrated by running the tuning solution (see Section 8.7) a minimum of five times with resulting relative standard deviations of absolute signals for all analytes of less than 5%.

10.1.3 Prior to initial calibration, set up proper instrument software routines for quantitative analysis. The instrument must be calibrated for the analytes to be determined using the calibration blank (see Section 8.6.1) and calibration standards A and B (see Section 8.4) prepared at one or more concentration levels. A minimum of three replicate integrations are required for data acquisition. Use the average of the integrations for instrument calibration and data reporting.

10.1.4 The rinse blank should be used to flush the system between solution changes for blanks, standards, and samples. Allow sufficient rinse time to remove traces of the previous sample or a minimum of 1 min. Solutions should be aspirated for 30 s prior to the acquisition of data to establish equilibrium.

10.2 Internal Standardization

10.2.1 Internal standardization must be used in all analyses to correct for instrument drift and physical interferences. A list of acceptable internal standards is provided in Table 4.

10.2.2 For full mass range scans, a minimum of three internal standards must be used. Procedures described in this method for general application detail five internal standards: scandium, yttrium, indium, terbium, and bismuth. These standards were used to generate the precision and recovery data attached

to this method. Internal standards must be present in all samples, standards, and blanks at identical levels.

10.2.3 This may be achieved by directly adding an aliquot of the internal standards to the CAL standard, blank, or sample solution or alternatively by mixing with the solution prior to nebulization using a second channel of the peristaltic pump and a mixing coil. The concentration of the internal standard should be sufficiently high to obtain a precise measurement of the isotope used for data correction and to minimize the possibility of correction errors if the internal standard is naturally present in the sample.

10.2.4 A concentration of 200 μg/L of each internal standard is recommended. Internal standards should be added to blanks, samples, and standards in a like manner so that dilution effects from the addition may be disregarded.

10.3 Instrument Performance

[Note: Check the performance of the instrument and verify the calibration using data gathered from analyses of calibration blanks, calibration standards and the QCS.]

10.3.1 After establishing calibration, it must be initially verified for all analytes by analyzing the QCS (see Section 8.8). If measurements exceed $\pm$ 10% of the established QCS value, terminate the analysis, identify and correct the problem, recalibrate the instrument, and reverify the calibration reverified before continuing analyses.

10.3.2 To verify that the instrument is properly calibrated on a continuing basis, run the calibration blank and calibration standards as surrogate samples after every 10 analyses. The results of the analyses of the standards will indicate whether the calibration remains valid. If the indicated concentration of any analyte deviates from the true concentration by more than 10%, reanalyze the standard. If the analyte is again outside the 10% limit, the instrument must be recalibrated and the previous ten samples reanalyzed. The instrument responses from the calibration check may be used for recalibration purposes. If the sample matrix is responsible for the calibration drift, the previous 10 samples should be reanalyzed in groups of five between calibration checks to prevent a similar drift situation from occurring.

11. Quality Control (QC)

11.1 Laboratory

Each laboratory using this method is required to operate a formal QC program. The minimum requirements of this program are an initial demonstration of laboratory capability and the analysis of laboratory reagent blanks, fortified blanks, and samples as a continuing check on performance. The laboratory is required to maintain performance records that define the quality of the data thus generated.

11.2 Initial Demonstration of Performance

11.2.1 The initial demonstration of performance is used to characterize instrument performance (method detection limits and linear calibration ranges) for analyses conducted by this method.

11.2.2 Method detection limits (MDL) should be established for all analytes, using reagent water (blank) fortified at a concentration of two to five times the estimated detection limit. To determine MDL

values, take seven replicate aliquots of the fortified reagent water and process through the entire analytical method. Perform all calculations defined in the method and report the concentration values in the appropriate units. Calculate the MDL as follows:

$$MDL = (t) \times (S)$$

where:

t = Student's t value for a 99% confidence level and a standard deviation estimate with n-1 degrees of freedom [t = 3.14 for seven replicates].
S = standard deviation of the replicate analyses.

MDLs should be determined every 6 months or whenever a significant change in background or instrument response is expected (e.g., detector change).

11.2.3 Linear calibration ranges are primarily detector limited. The upper limit of the linear calibration range should be established for each analyte by determining the signal responses from a minimum of three different concentration standards, one of which is close to the upper limit of the linear range. Avoid damage to the detector during this process. The linear calibration range, which may be used for the analysis of samples, should be judged by the analyst from the resulting data. Linear calibration ranges should be determined every 6 months or whenever a significant change in instrument response is expected (e.g., detector change).

11.3 Assessing Laboratory Performance--Reagent and Fortified Blanks

11.3.1 Laboratory Reagent Blank (LRB). The laboratory must analyze at least one LRB (see Section 8.6.2) with each set of samples. LRB data are used to assess contamination from the laboratory environment and to characterize spectral background from the reagents used in sample processing. If an analyte value in the reagent blank exceeds its determined MDL, laboratory or reagent contamination should be suspected. Any source of contamination should be corrected and the samples reanalyzed.

11.3.2 Laboratory Fortified Blank (LFB). The laboratory must analyze at least one LFB (see Section 8.9) with each batch of samples. Calculate accuracy as percent recovery (see Section 11.4.2). If the recovery of any analyte falls outside the control limits (see Section 11.3.3), that analyte is judged out of control, and the source of the problem should be identified and resolved before continuing analyses.

11.3.3 Until sufficient LFB data become available (usually a minimum of 20-30 analyses), the laboratory should assess laboratory performance against recovery limits of 85-115%. When sufficient internal performance data becomes available, develop control limits from the percent mean recovery (x) and the standard deviation (S) of the mean recovery. These data are used to establish upper and lower control limits as follows:

UPPER CONTROL LIMIT = x + 3S
LOWER CONTROL LIMIT = x - 3S

After each 5-10 new recovery measurements, new control limits should be calculated using only the most recent 20-30 data points.

11.4 Assessing Analyte Recovery - Laboratory Fortified Sample Matrix

11.4.1 The laboratory must add a known amount of analyte to a minimum of 10% of the routine samples or one sample per sample set, whichever is greater. For water samples, the analyte concentration should be the same as that used in the LFB (see Section 11.3.2). For solid samples, the concentration added should be 50 mg/kg equivalent (100 μg/L in the analysis solution). Over time, samples from all routine sample sources should be fortified.

11.4.2 Calculate the percent recovery for each analyte, corrected for background concentrations measured in the unfortified sample and compare these values to the control limits established in Section 11.3.3 for the analyses of LFBs. Recovery calculations are not required if the concentration of the analyte added is less than 10% of the sample background concentration. Percent recovery may be calculated in units appropriate to the matrix using the following equation:

$$R = (C_s - C)/s \times 100$$

where:

R = percent recovery, %.

C_s = fortified sample concentration, ng/L.

C = sample background concentration, ng/L.

s = concentration equivalent of fortifier added to sample, ng/L.

11.4.3 If recovery of any analyte falls outside the designated range and laboratory performance for that analyte is shown to be in control (see Section 11.3), the recovery problem encountered with the fortified sample is judged to be matrix-related, not system-related. The analyte in the unfortified sample must be labelled "suspect/matrix" to inform the user that the results are suspect due to matrix effects.

11.5 Internal Standards Responses

The analyst is expected to monitor the responses from the internal standards throughout the sample set being analyzed. Ratios of the internal standards responses against each other should also be monitored routinely. This information may be used to detect potential problems caused by mass dependent drift, errors incurred in adding the internal standards, or increases in the concentrations of individual internal standards caused by background contributions from the sample. The absolute response of any one internal standard should not deviate more than 60-125% of the original response in the calibration blank. If deviations greater than this are observed, use the following test procedure:

11.5.1 Flush the instrument with the rinse blank and monitor the responses in the calibration blank. If the responses of the internal standards are now within the limit, take a fresh aliquot of the sample, dilute by a further factor of two, add the internal standards and reanalyze.

11.5.2 If the test (see Section 10.5.1) is not satisfied or if it is a blank or calibration standard that is out of limits, terminate the analysis and determine the cause of the drift. Possible causes may be a partially blocked sampling cone or a change in the tuning condition of the instrument.

12. Procedure

12.1 Samples should be received from the extraction laboratory in a 10-mL volumetric flask diluted to the mark. The sample contains the necessary solution in appropriate concentration for ICP\MS determination.

12.2 For every new or unusual matrix, a semi-quantitative analysis should be carried out to screen for high element concentrations. Information gained from this procedure may be used to prevent potential damage to the detector during sample analysis and to identify elements that may be higher than the linear range. Matrix screening may be carried out by using intelligent software, if available, or by diluting the sample by a factor of 500 and analyzing in a semi-quantitative mode. The sample should also be screened for background levels of all elements chosen for use as internal standards to prevent bias.

12.3 Initiate instrument operating configuration. Tune and calibrate the instrument for the analytes of interest (see Section 10).

12.4 Establish instrument software run procedures for quantitative analysis. For all sample analyses, a minimum of three replicate integrations are required for data acquisition. Discard any integrations considered to be statistical outliers and use the average of the integrations for data reporting.

12.5 Monitor all masses that might affect data quality during the analytical run. At a minimum, those masses prescribed in Table 5 must be monitored in the same scan as is used for the collection of the data. This information should be used to correct the data for identified interferences.

12.6 Use the rinse blank to flush the system between samples. Allow sufficient time to remove traces of the previous sample or a minimum of 1 min. Aspirate the samples for 30 s prior to the collection of data.

12.7 Dilute samples having concentrations higher than the established linear dynamic range should be diluted into range and reanalyzed. First, analyze the sample for trace elements, protecting the detector from the high concentration elements, if necessary, by selecting appropriate scanning windows. Then dilute the sample to determine the remaining elements. Alternatively, the dynamic range may be adjusted by selecting an alternative isotope of lower natural abundance, provided quality control data for that isotope have been established. Do not adjust the dynamic range by altering instrument conditions to an uncharacterized state.

13. Calculations

13.1 Elemental equations recommended for sample data calculations are listed in Table 6. Sample data should be reported in units of ng/m^3.

13.1.1 Calculate the air volume sampled, corrected to EPA-reference conditions:

$$V_{std} = V_s \left(\frac{T_{std}}{T_m}\right)\left(\frac{P_{bar}}{P_{std}}\right)$$

where:

V_{std} = volume of ambient air sampled at EPA-reference conditions, m^3
V_s = volume of ambient air pulled through the sampler, m^3.
T_{std} = absolute EPA-reference temperature, 298°K.
T_m = average ambient temperature, °K.
P_{bar} = barometric pressure during sampling measurement condition, mm Hg.
P_{std} = EPA-reference barometric pressure, 760 mm Hg.

13.1.2 Metal concentration in the air sample can then be calculated as follows:

$$C = [(\mu g \text{ metal/mL}) \times (40 \text{ mL/strip})(9) - F_m]/V_{std}$$

where:

C = concentration, μg metal/m^3.
μg metal/mL = metal concentration determined from Section 12.
40 mL/strip = total sample volume, mL.
9 = $\frac{\text{Useable filter area, [20 cm x 23 cm (8" x 9")]}}{\text{Exposed area of one strip, [2.5 cm x 20 cm (1" x 8")].}}$
F_m = average concentration of blank filters, μg.
V_{std} = standard air volume pulled through filter, std. m^3 (25°C and 760 mm Hg).

Do not report element concentrations below the determined MDL.

13.2 For data values less than 10, use two significant figures to report element concentrations. For data values greater than or equal to 10, three significant figures.

13.3 Reported values should be calibration blank subtracted (see Inorganic Compendium Method IO-3.1).

13.4 Correct data values for instrument drift or sample matrix induced interferences by applying internal standardization. Corrections for characterized spectral interferences should be applied to the data. Chloride interference corrections should be made on all samples, regardless of the addition of hydrochloric acid, as the chloride ion is a common constituent of environmental samples.

13.5 If an element has more than 1 monitored isotope, examine the concentration calculated for each isotope, or the isotope ratios, to detect a possible spectral interference. Consider both primary and secondary isotopes when evaluating the element concentration. In some cases, secondary isotopes may be less sensitive or more prone to interferences that the primary recommended isotopes; therefore,

differences between the results do not necessarily indicate a problem with data calculated for the primary isotopes.

13.6 The QC data obtained during the analyses provide an indication of the quality of the sample data and should be provided with the sample results.

14. Precision and Accuracy

14.1 Instrument operating conditions for single laboratory testing of the method are summarized in Table 6. Total recoverable MDLs determined are listed in Table 7.

14.2 Data obtained from single laboratory testing of the method are summarized in Table 8 for five water samples representing drinking water, surface water, ground water, and waste effluent. For each matrix, five replicates were analyzed and the average of the replicates used to determine the sample background concentration for each element. Two additional pairs of duplicates were fortified at different concentration levels. For each method element, the sample background concentration, mean percent recovery, standard deviation of the percent recovery, and relative percent difference between the duplicate fortified samples are listed in Table 8.

14.3 Data obtained from single laboratory testing of the method for three solid samples consisting of SRM 1645 River Sediment, EPA Hazardous Soil, and EPA Electroplating Sludge are summarized in Table 9. For each method element, the sample background concentration, mean percent recovery, standard deviation of the percent recovery, and relative percent difference between the duplicate fortified samples were determined as for Section 14.2.

14.4 Activities required to be performed using ICP/MS to validate method precision and accuracy are summarized in Table 10.

15. References

1. "Standard Operating Procedures for the ICP-DES Determination of Trace Elements in Suspended Particulate Matter Collected on Glass-Fiber Filters," EMSL/RTP-SOP-EMO-002, Revision, October, 1983.

2. "Reference Method for the Determination of Suspended Particulates in the Atmosphere (High Volume Method)," *Code of Federal Regulations*, Title 40, Part 50, Appendix B, pp. 12-16 (July 1, 1975).

3. "Reference Method for the Determination of Lead in Suspended Particulate Matter Collected from Ambient Air.," *Federal Register* 43 (194): 46262-3, 1978.

4. Rhodes, R.C., 1981, "Special Extractability Study of Whatman and Schleicher and Schuell Hi-Vol Filters," Memo to file, August 5, 1981, Quality Assurance Division, Environmental Monitoring Systems Laboratory, U. S. Environmental Protection Agency, Research Triangle Park NC.

5. Ward, A. F., *The Jarren-Ash Plasma Newsletter*, Volumes I, II, and III.

6. Nygard, D., and Sot, J., "Determination Near the Detection Limit: A Comparison of Sequential and Simultaneous Plasma Emission Spectrometers," *Spectroscopy*, Vol. 3(4).

7. "Simplex Optimization of Multielement Ultrasonic Extraction of Atmospheric Particulates," Harper, et. al., *Analytical Chemistry*, Vol 55(9), August 1983.

8. A. L. Gray and A. R. Date, *Analyst*, Vol 108:1033.

9. R. S. Houk et al., *Anal. Chem.*, Vol 52:2283.

10. R. S. Houk, *Anal. Chem.* Vol. 58(97A).

11. J. J. Thompson and R. S. Houk, *Appl. Spec.*, Vol. 41:801, 1987.

12. "OSHA Safety and Health Standards, General Industry," (29 CFR 1910), Occupational Safety and Health Administration, OSHA 2206, revised January 1976.

13. "Proposed OSHA Safety and Health Standards, Laboratories," *Federal Register*, July 24, 1986.

14. *Code of Federal Regulations* 40, Ch. 1, Pt. 136 Appendix B.

TABLE 1. ESTIMATED METHOD DETECTION[a] LIMITS

Element	Recommended analytical mass	Estimated Method Detection Limits (MDLs)[b]	
		μg/L	ng/m^3
Aluminum	27	0.05	0.01
Antimony	121	0.08	0.01
Arsenic	75	0.9	0.30
Barium	137	0.5	0.10
Beryllium	9	0.1	0.02
Cadmium	111	0.1	0.02
Chromium	52	0.07	0.01
Cobalt	59	0.03	0.01
Copper	63	0.03	0.01
Lead	206,207,208	0.08	0.01
Manganese	55	0.1	0.02
Molybdenum	98	0.1	0.02
Nickel	60	0.2	0.02
Selenium	82	5	1.10
Silver	107	0.05	0.01
Thallium	205	0.09	0.01
Thorium	232	0.03	0.01
Uranium	238	0.02	0.01
Vanadium	51	0.02	0.01
Zinc	66	0.2	0.04

[a]Instrument detection limits (3σ) estimated from seven replicate integrations of the blank (1% v/v nitric acid) following calibration of the instrument with three replicate integrations of a multi-element standard.
[b]Based upon sampling rate of 1.13 m^3/min for 24-h for a total sample volume of 1,627.2 m^3, factor of 9 for partial filter analysis; digestion of 0.040 L/filter.

TABLE 2. COMMON POLYATOMIC ION INTERFERENCES IN ICP-MS

BACKGROUND MOLECULAR IONS		
Molecular Ion	**Mass**	**Element Interference[1]**
NH^+	15	
OH^+	17	
OH_2^+	18	
C_2^+	24	
CN^+	26	
CO^+	28	
N_2^+	28	
N_2H^+	29	
NO^+	30	
NOH^+	31	
O_2^+	32	
OH^+	33	
$^{36}ArH^+$	37	
$^{38}ArH^+$	39	
$^{40}ArH^+$	41	
CO_2^+	44	
CO_2H^+	45	Sc
ArC^+, ArO^+	52	Cr
ArN^+	54	Cr
$ArNH^+$	55	Mn
ArO^+	56	
$ArOH^+$	57	
$^{40}Ar^{36}Ar^+$	76	Se
$^{40}Ar^{38}Ar^+$	78	Se
$^{40}Ar_2$	80	Se

TABLE 2. (continued)

MATRIX MOLECULAR IONS		
CHLORIDE Polyatomic Ion	Mass	Element Interference
$^{35}ClO^+$ $^{35}ClOH^+$ $^{37}ClO^+$ $^{37}ClOH^+$	51 52 53 54	V Cr Cr Cr
$Ar^{35}Cl^+$ $Ar^{37}Cl^+$	75 77	As Se
SULFATE Polyatomic Ion	Mass	Element Interference
$^{32}SO^+$ $^{32}SOH^+$ $^{34}SO^+$ $^{34}SOH^+$ SO_2, S_2^+ $Ar^{32}S^+$ $Ar^{34}S^+$	48 49 50 51 64 72 74	T_i T_i V, Cr V Zn
PHOSPHATE Polyatomic Ion	Mass	Element Interference
PO^+ POH^+ PO_2^+ ArP^2	47 48 63 71	Cu
GROUP I, II METALS Polyatomic Ion	Mass	Element Interference
$ArNa^+$ ArK^+ $ArCa^+$	63 79 80	Cu
MATRIX OXIDES[2] Polyatomic Ion	Masses	Element Interference
TiO ZrO MoO	62-66 106-112 108-116	Ni, Cu, Zn Ag, Cd Cd

[1]Method elements or internal standards affected by the polyatomic ions.
[2]Oxide interferences will normally be very small and will only impact the method elements when present at relatively high concentrations. Some examples of matrix oxides are listed of which the analyst should be aware. It is recommended that Ti and Zr isotopes are monitored in solid waste samples, which are likely to contain high levels of these elements. Mo is monitored as a method analyte.

TABLE 3. INSTRUMENT OPERATING CONDITIONS FOR PRECISION AND RECOVERY DATA

Instrument	VG PlasmaQuad Type I
Plasma forward power	1.35 kW
Coolant flow rate	13.5 L/min
Auxiliary flow rate	0.6 L/min
Nebulizer flow rate	0.78 L/min
Solution uptake rate	0.6 mL/min
Spray chamber temperature	15°C
Data Acquisition	
Detector mode	Pulse counting
Replicate integrations	3
Mass range	8 - 240 amu
Dwell time	320 μs
Number of MCA channels	2048
Number of scan sweeps	85
Total acquisition time	3 min per sample

TABLE 4. INTERNAL STANDARDS AND LIMITATIONS OF USE

Internal Standard	Mass	Possible Limitation
Lithium	6	a
Scandium	45	polyatomic ion interference
Yttrium	89	a,b
Rhodium	103	
Indium	115	isobaric interference by Sn
Terbium	159	
Holmium	165	
Lutetium	175	
Bismuth	209	a

[a]May be present in environmental samples.
[b]In some instruments yttrium may form measurable amounts of YO+ (105 amu) and YOH+ (106 amu). If this is the case, care should be taken in the use of the cadmium elemental correction equation.

TABLE 5. RECOMMENDED ANALYTICAL ISOTOPES AND ADDITIONAL MASSES WHICH MUST BE MONITORED

Isotope	Element of Interest
27	Aluminum
121,123	Antimony
75	Arsenic
135,137	Barium
9	Beryllium
106,108,111,114	Cadmium
52,53	Chromium
59	Cobalt
63,65	Copper
206,207,208	Lead
55	Manganese
95,97,98	Molybdenum
60,62	Nickel
77,82	Selenium
107,109	silver
203,205	Thallium
232	Thorium
238	Uranium
51	Vanadium
66,67,68	Zinc
83	Krypton
99	Ruthenium
105	Palladium
118	Tin

NOTE: Isotopes recommended for analytical determination are underlined.

TABLE 6. RECOMMENDED ELEMENTAL EQUATIONS FOR DATA CALCULATIONS

Element	Element Equation	Note
Al	$(1.000)(^{27}C)$	
Sb	$(1.000)(^{121}C)$	
As	$(1.000)(^{75}C)-(3.127)[(^{77}C)-(0.815)(^{82}C)]$	(1)
Ba	$(1.000)(^{137}C)$	
Be	$(1.000)(^{9}C)$	
Cd	$(1.000)(^{111}C)-(1.073)[(^{108}C)-(0.712)(^{106}C)]$	(2)
Cr	$(1.000)(^{52}C)$	(3)
Co	$(1.000)(^{59}C)$	
Cu	$(1.000)(^{63}C)$	
Pb	$(1.000)(^{206}C)+(1.000)(^{207}C)+(1.000)(^{208}C)$	(4)
Mn	$(1.000)(^{55}C)$	
Mo	$(1.000)(^{98}C)-(0.146)(^{99}C)$	(5)
Ni	$(1.000)(^{60}C)$	
Se	$(1.000)(^{82}C)$	(6)
Ag	$(1.000)(^{107}C)$	
Tl	$(1.000)(^{205}C)$	
Th	$(1.000)(^{232}C)$	
U	$(1.000)(^{238}C)$	
V	$(1.000)(^{51}C)-(3.127)[(^{53}C)-(0.113)(^{52}C)]$	(7)
Zn	$(1.000)(^{66}C)$	
Bi	$(1.000)(^{209}C)$	
In	$(1.000)(^{115}C)-(0.016)(^{118}C)$	(8)
Sc	$(1.000)(^{45}C)$	
Tb	$(1.000)(^{159}C)$	
Y	$(1.000)(^{89}C)$	

C - calibration blank subtracted counts at specified mass.
(1) - correction for chloride interference with adjustment for Se77. ArCl 75/77 ratio may be determined from the reagent blank.
(2) - correction for MoO interference. An additional isobaric elemental correction should be made if palladium is present.
(3) - in 0.4% v/v HCl, the background from ClOH will normally be small. However, the contribution may be estimated from the reagent blank.
(4) - allowance for isotopic variability of lead isotopes.
(5) - isobaric elemental correction for ruthenium.
(6) - some argon supplies contain krypton as an impurity. Selenium is corrected for Kr82 by background subtraction.
(7) - correction for chloride interference with adjustment for Cr53 ratio may be determined from the reagent blank.
(8) - isobaric elemental correction for tin.

TABLE 7. TOTAL RECOVERABLE METHOD DETECTION LIMITS FOR SOLIDS/WASTE/LIQUIDS[1]

Element	Recommended Analytical Mass	Method Detection Limits	
		Aqueous, µg/L	Solids, mg/kg
Aluminum	27	1.0	0.4
Antimony	121	0.4	0.2
Arsenic	75	1.4	0.6
Barium	137	0.8	0.4
Beryllium	9	0.3	0.1
Cadmium	111	0.5	0.2
Chromium	52	0.9	0.4
Cobalt	59	0.09	0.04
Copper	63	0.5	0.2
Lead	206,207,208	0.6	0.3
Manganese	55	0.1	0.05
Molybdenum	98	0.3	0.1
Nickel	60	0.5	0.2
Selenium	82	7.9	3.2
Silver	107	0.1	0.05
Thallium	205	0.3	0.1
Thorium	232	0.1	0.05
Uranium	238	0.1	0.05
Vanadian	51	2.5	1.0
Zinc	66	1.8	0.7

[1] MDL concentrations are computed for original matrix with allowance for sample dilution during preparation.

TABLE 8. PRECISION AND RECOVERY DATA IN AQUEOUS MATRICES

DRINKING WATER

Element	Sample Concn. (µg/L)	Low Spike (µg/L)	Average Recovery R (%)	S(R)	RPD	High Spike (µg/L)	Average Recovery R (%)	S(R)	RPD
Al	175	50	115.8	5.9	0.4	200	102.7	1.6	1.1
Sb	<0.4	10	99.1	0.7	2.0	100	100.8	0.7	2.0
As	<1.4	50	99.7	0.8	2.2	200	102.5	1.1	2.9
Ba	43.8	50	94.8	3.9	5.8	200	95.6	0.8	1.7
Be	<0.3	10	113.5	0.4	0.9	100	111.0	0.7	1.8
Cd	<0.5	10	97.0	2.8	8.3	100	101.5	0.4	1.0
Cr	<0.9	10	111.0	3.5	9.0	100	99.5	0.1	0.2
Co	0.11	10	94.4	0.4	1.1	100	93.6	0.5	1.4
Cu	3.6	10	101.8	8.8	17.4	100	91.6	0.3	0.3
Pb	0.87	10	97.8	2.0	2.8	10	99.0	0.8	2.2
Mn	0.96	10	96.9	1.8	4.7	100	95.8	0.6	1.8
Mo	1.9	10	99.4	1.6	3.4	100	98.6	0.4	1.0
Ni	1.9	10	100.2	5.7	13.5	100	95.2	0.5	1.3
Se	<7.9	50	99.0	1.8	5.3	200	93.5	3.5	10.7
Ag	<0.1	50	100.7	1.5	4.2	200	99.0	0.4	1.0
Tl	<0.3	10	97.5	0.4	1.0	100	98.5	1.7	4.9
Th	<0.1	10	109.0	0.7	1.8	100	106.0	1.4	3.8
U	0.23	10	110.7	1.4	3.5	100	107.8	0.7	1.9
V	<2.5	50	101.4	0.1	0.4	200	97.5	0.7	2.1
Zn	5.2	50	103.4	3.3	7.7	200	96.4	0.5	1.0

S(R) Standard deviation of percent recovery.
RPD Relative percent difference between duplicate spike determinations.
< Sample concentration below established method detection limit.

TABLE 8. PRECISION AND RECOVERY DATA IN AQUEOUS MATRICES (Cont).

WELL WATER

Element	Sample Concn. (µg/L)	Low Spike (µg/L)	Average Recovery R (%)	S(R)	RPD	High Spike (µg/L)	Average Recovery R (%)	S(R)	RPD
Al	34.3	50	100.1	3.9	0.8	200	102.6	1.1	1.3
Sb	0.46	10	98.4	0.9	1.9	100	102.5	0.7	1.9
As	<1.4	50	110.0	6.4	16.4	200	101.3	0.2	0.5
Ba	106	50	95.4	3.9	3.3	200	104.9	1.0	1.6
Be	<0.3	10	104.5	0.4	1.0	100	101.4	1.2	3.3
Cd	1.6	10	88.6	1.7	3.8	100	98.6	0.6	1.6
Cr	<0.9	10	111.0	0.0	0.0	100	103.5	0.4	1.0
Co	2.4	10	100.6	1.0	1.6	100	104.1	0.4	0.9
Cu	37.4	10	104.3	5.1	1.5	100	100.6	0.8	1.5
Pb	3.5	10	95.2	2.5	1.5	10	99.5	1.4	3.9
Mn	2770	10	*	*	1.8	100	*	*	0.7
Mo	2.1	10	103.8	1.1	1.6	100	102.9	0.7	1.9
Ni	11.4	10	116.5	6.3	6.5	100	99.6	0.3	0.0
Se	<7.9	50	127.3	8.4	18.7	200	101.3	0.2	0.5
Ag	<0.1	50	99.2	0.4	1.0	200	101.5	1.4	3.9
Tl	<0.3	10	93.9	0.1	0.0	100	100.4	1.8	5.0
Th	<0.1	10	103.0	0.7	1.9	100	104.5	1.8	4.8
U	1.8	10	106.0	1.1	1.6	100	109.7	2.5	6.3
V	<2.5	50	105.3	0.8	2.1	200	105.8	0.2	0.5
Zn	554	50	*	*	1.2	200	102.1	5.5	3.2

S(R) Standard deviation of percent recovery.
RPD Relative percent difference between duplicate spike determinations.
< Sample concentration below established method detection limit.

TABLE 8. PRECISION AND RECOVERY DATA IN AQUEOUS MATRICES (Cont).

POND WATER

Element	Sample Concn. (μg/L)	Low Spike (μg/L)	Average Recovery R (%)	S(R)	RPD	High Spike (μg/L)	Average Recovery R (%)	S(R)	RPD
Al	610	50	*	*	1.7	200	78.2	9.2	5.5
Sb	<0.4	10	101.1	1.1	2.9	100	101.5	3.0	8.4
As	<1.4	50	100.8	2.0	5.6	200	96.8	0.9	2.6
Ba	28.7	50	102.1	1.8	2.4	200	102.9	3.7	9.0
Be	<0.3	10	109.1	0.4	0.9	100	114.4	3.9	9.6
Cd	<0.5	10	106.6	3.2	8.3	100	105.8	2.8	7.6
Cr	2.0	10	107.0	1.0	1.6	100	100.0	1.4	3.9
Co	0.79	10	101.6	1.1	2.7	100	101.7	1.8	4.9
Cu	5.4	10	107.5	1.4	1.9	100	98.1	2.5	6.8
Pb	1.9	10	108.4	1.5	3.2	100	106.1	0.0	0.0
Mn	617	10	*	*	1.1	100	139.0	11.1	4.0
Mo	0.98	10	104.2	1.4	3.5	100	104.0	2.1	5.7
Ni	2.5	10	102.0	2.3	4.7	100	102.5	2.1	5.7
Se	<7.9	50	102.7	5.6	15.4	200	105.5	1.4	3.8
Ag	0.12	50	102.5	0.8	2.1	200	105.2	2.7	7.1
Tl	<0.3	10	108.5	3.2	8.3	100	105.0	2.8	7.6
Th	0.19	10	93.1	3.5	10.5	100	93.9	1.6	4.8
U	0.30	10	107.0	2.8	7.3	100	107.2	1.8	4.7
V	3.5	50	96.1	5.2	14.2	200	101.5	0.2	0.5
Zn	6.8	50	99.8	1.7	3.7	200	100.1	2.8	7.7

S(R) Standard deviation of percent recovery.
RPD Relative percent difference between duplicate spike determinations.
< Sample concentration below established method detection limit.
* Spike concentration <10% of sample background concentration.

TABLE 8. PRECISION AND RECOVERY DATA IN AQUEOUS MATRICES (Cont).

SEWAGE TREATMENT PRIMARY EFFLUENT

Element	Sample Concn. (µg/L)	Low Spike (µg/L)	Average Recovery R (%)	S(R)	RPD	High Spike (µg/L)	Average Recovery R (%)	S(R)	RPD
Al	1150	50	*	*	3.5	200	100.0	13.8	1.5
Sb	1.5	10	95.7	0.4	0.9	100	104.5	0.7	1.9
As	<1.4	50	104.2	4.5	12.3	200	101.5	0.7	2.0
Ba	202	50	79.2	9.9	2.5	200	108.6	4.6	5.5
Be	<0.3	10	110.5	1.8	4.5	100	106.4	0.4	0.9
Cd	9.2	10	101.2	1.3	0.0	100	102.3	0.4	0.9
Cr	128	10	*	*	1.5	100	102.1	1.7	0.4
Co	13.4	10	95.1	2.7	2.2	100	99.1	1.1	2.7
Cu	171	10	*	*	2.4	100	105.2	7.1	0.7
Pb	17.8	10	95.7	3.8	1.1	100	102.7	1.1	2.5
Mn	199	10	*	*	1.5	100	103.4	2.1	0.7
Mo	136	10	*	*	1.4	100	105.7	2.4	2.1
Ni	84.0	10	88.4	16.3	4.1	100	98.0	0.9	0.0
Se	<7.9	50	112.0	10.9	27.5	200	108.8	3.0	7.8
Ag	10.9	50	97.1	0.7	1.5	200	102.6	1.4	3.7
Tl	<0.3	10	97.5	0.4	1.0	100	102.0	0.0	0.0
Th	0.11	10	15.4	1.8	30.3	100	29.3	0.8	8.2
U	0.71	10	109.4	1.8	4.3	100	109.3	0.7	1.8
V	<2.5	50	90.9	0.9	0.6	200	99.4	2.1	6.0
Zn	163	50	85.8	3.3	0.5	200	102.0	1.5	1.9

S(R) Standard deviation of percent recovery.
RPD Relative percent difference between duplicate spike determinations.
< Sample concentration below established method detection limit.

TABLE 8. PRECISION AND RECOVERY DATA IN AQUEOUS MATRICES (Cont).

INDUSTRIAL EFFLUENT

Element	Sample Concn. (µg/L)	Low Spike (µg/L)	Average Recovery R (%)	S(R)	RPD	High Spike (µg/L)	Average Recovery R (%)	S(R)	RPD
Al	44.7	50	98.8	8.7	5.7	200	90.4	2.1	2.2
Sb	2990	10	*	*	0.3	100	*	*	0.0
As	<1.4	50	75.1	1.8	6.7	200	75.0	0.0	0.0
Ba	100	50	96.7	5.5	3.4	200	102.9	1.1	0.7
Be	<0.3	10	103.5	1.8	4.8	100	100.0	0.0	0.0
Cd	10.1	10	106.5	4.4	2.4	100	97.4	1.1	2.8
Cr	171	10	*	*	0.0	100	127.7	2.4	1.7
Co	1.3	10	90.5	3.2	8.7	100	90.5	0.4	1.3
Cu	101	10	*	*	0.9	100	92.5	2.0	1.6
Pb	294	10	*	*	2.6	100	108.4	2.1	0.0
Mn	154	10	*	*	2.8	100	103.6	3.7	1.6
Mo	1370	10	*	*	1.4	100	*	*	0.7
Ni	17.3	10	107.4	7.4	5.0	100	88.2	0.7	1.0
Se	15.0	50	129.5	9.3	15.1	200	118.3	1.9	3.6
Ag	<0.1	50	91.8	0.6	1.7	200	87.0	4.9	16.1
Tl	<0.3	10	90.5	1.8	5.5	100	98.3	1.0	2.8
Th	0.29	10	109.6	1.2	2.7	100	108.7	0.0	0.0
U	0.17	10	104.8	2.5	6.6	100	109.3	0.4	0.9
V	<2.5	50	74.9	0.1	0.3	200	72.0	0.0	0.0
Z	43.4	50	85.0	4.0	0.6	200	97.6	1.0	0.4

S(R) Standard deviation of percent recovery.
RPD Relative percent difference between duplicate spike determinations.
< Sample concentration below established method detection limit.
* Spike concentration <10% of sample background concentration.

TABLE 9. PRECISION AND RECOVERY DATA IN AQUEOUS MATRICES

EPA HAZARDOUS SOIL #884

Element	Sample Concn. (μg/L)	Low Spike (μg/L)	Average Recovery R (%)	S(R)	RPD	High Spike (μg/L)	Average Recovery R (%)	S(R)	RPD
Al	5170	20	*	*	-	100	*	*	-
Sb	5.4	20	69.8	2.5	4.7	100	70.4	1.8	6.5
As	8.8	20	104.7	5.4	9.1	100	102.2	2.2	5.4
Ba	113	20	54.9	63.6	18.6	100	91.0	9.8	0.5
Be	0.6	20	100.1	0.6	1.5	100	102.9	0.4	1.0
Cd	1.8	20	97.3	1.0	1.4	100	101.7	0.4	1.0
Cr	83.5	20	86.7	16.1	8.3	100	105.5	1.3	0.0
Co	7.1	20	98.8	1.2	1.9	100	102.9	0.7	1.8
Cu	115	20	86.3	13.8	3.4	100	102.5	4.2	4.6
Pb	152	20	85.0	45.0	13.9	100	151.7	25.7	23.7
Mn	370	20	*	*	12.7	100	85.2	10.4	2.2
Mo	4.8	20	95.4	1.5	2.9	100	95.2	0.7	2.0
Ni	19.2	20	101.7	3.8	1.0	100	102.3	0.8	0.8
Se	<3.2	20	79.5	7.4	26.4	100	100.7	9.4	26.5
Ag	1.1	20	96.1	0.6	0.5	100	94.8	0.8	2.3
Tl	0.24	20	94.3	1.1	3.1	100	97.9	1.0	2.9
Th	1.0	20	69.8	0.6	1.3	100	76.0	2.2	7.9
U	1.1	20	100.1	0.2	0.0	100	102.9	0.0	0.0
V	17.8	20	109.2	4.2	2.3	100	106.7	1.3	2.4
Zn	128	20	87.0	27.7	5.5	100	113.4	12.9	14.1

S(R) Standard deviation of percent recovery.
RPD Relative percent difference between duplicate spike determinations.
< Sample concentration below established method detection limit.
* Spike concentration <10% of sample background concentration.
- Not determined.
+ Equivalent.

TABLE 9. PRECISION AND RECOVERY DATA IN AQUEOUS MATRICES

NBS 1645 RIVER SEDIMENT

Element	Sample Concn. (µg/L)	Low Spike (µg/L)	Average Recovery R (%)	S(R)	RPD	High Spike (µg/L)	Average Recovery R (%)	S(R)	RPD
Al	5060	20	*	*	-	100	*	*	-
Sb	21.8	20	73.9	6.5	9.3	100	81.2	1.5	3.9
As	67.2	20	104.3	13.0	7.6	100	107.3	2.1	2.9
Ba	54.4	20	105.6	4.9	2.8	100	98.6	2.2	3.9
Be	0.59	20	88.8	0.2	0.5	100	87.9	0.1	0.2
Cd	8.3	20	92.9	0.4	0.0	100	95.7	1.4	3.9
Cr	29100	20	*	*	-	100	*	*	-
Co	7.9	20	97.6	1.3	2.6	100	103.1	0.0	0.0
Cu	112	20	121.0	9.1	1.5	100	105.2	2.2	1.8
Pb	742	20	*	*	-	100	-	-	-
Mn	717	20	*	*	-	100	-	-	-
Mo	17.1	20	89.8	8.1	12.0	100	98.4	0.7	0.9
Ni	41.8	20	103.7	6.5	4.8	100	102.2	0.8	0.0
Se	<3.2	20	108.3	14.3	37.4	100	93.9	5.0	15.1
Ag	1.8	20	94.8	1.6	4.3	100	96.2	0.7	1.9
Tl	1.2	20	91.2	1.3	3.6	100	94.4	0.4	1.3
Th	0.90	20	91.3	0.9	2.6	100	92.3	0.9	2.8
U	0.79	20	95.6	1.8	5.0	100	98.5	1.2	3.5
V	21.8	20	91.8	4.6	5.7	100	100.7	0.6	0.8
Zn	1780	20	*	*	-	100	*	*	-

S(R) Standard deviation of percent recovery.
RPD Relative percent difference between duplicate spike determinations.
< Sample concentration below established method detection limit.
* Spike concentration <10% of sample background concentration.
- Not determined.
+ Equivalent.

TABLE 9. PRECISION AND RECOVERY DATA IN AQUEOUS MATRICES

EPA ELECTROPLATING SLUDGE #286

Element	Sample Concn. (µg/L)	Low Spike (µg/L)	Average Recovery R (%)	S(R)	RPD	High Spike (µg/L)	Average Recovery R (%)	S(R)	RPD
Al	5110	20	*	*	-	100	*	*	-
Sb	8.4	20	55.4	1.5	4.1	100	61.0	0.2	0.9
As	41.8	20	91.0	2.3	1.7	100	94.2	0.8	1.5
Ba	27.3	20	1.8	7.1	8.3	100	0	1.5	10.0
Be	0.25	20	92.0	0.9	2.7	100	93.4	0.3	0.9
Cd	112	20	85.0	5.2	1.6	100	88.5	0.8	0.5
Cr	7980	20	*	*	-	100	*	*	-
Co	4.1	20	89.2	1.8	4.6	100	88.7	1.5	4.6
Cu	740	20	*	*	6.0	100	61.7	20.4	5.4
Pb	1480	20	*	*	-	100	*	*	-
Mn	295	20	*	*	-	100	-	-	-
Mo	13.3	20	82.9	1.2	1.3	100	89.2	0.4	1.0
Ni	450	20	*	*	6.8	100	83.0	10.0	4.5
Se	3.5	20	89.7	3.7	4.2	100	91.0	6.0	18.0
Ag	5.9	20	89.8	2.1	4.6	100	85.1	0.4	1.1
Tl	1.9	20	96.9	0.9	2.4	100	98.9	0.9	2.4
Th	3.6	20	91.5	1.3	3.2	100	97.4	0.7	2.0
U	2.4	20	107.7	2.0	4.6	100	109.6	0.7	1.8
V	21.1	20	105.6	1.8	2.1	100	97.4	1.1	2.5
Zn	13300	20	*	*	-	100	*	*	-

S(R) Standard deviation of percent recovery.
RPD Relative percent difference between duplicate spike determinations.
< Sample concentration below established method detection limit.
* Spike concentration <10% of sample background concentration.
- Not determined.
+ Equivalent.

TABLE 10. REQUIRED QUALITY CONTROL REQUIREMENTS FOR ICP/MS ANALYSIS

QC procedure	Typical frequency	Criteria
Initial calibration	At the beginning of the analysis	None
Initial calibration verification	Immediately after initial calibration	90%-110% of the actual concentration
Initial calibration blank	Immediately after initial calibration verification	May be less than project detection limits
High standard verification	Following the initial calibration blank analysis	95%-105% of the actual concentration
Interference check standard	Following the high standard verificatino, every 8 hours, and at the end of a run	80%-120% of the actual concentration
Continuing calibration verification	Analyzed before the first sample, after every 10 samples, and at the end of the run	90%-110% of the actual concentration
Continuing blank verification	Analyzed following each continuing calibration verification	Must be less than project detection limits
Method blank	1 per 20 samples, a minimum of 1 per batch	Must be less than project detection limits
Laboratory control spike	1 per 20 samples, a minimum of 1 per batch	80%-120% recovery, with the exception of Ag and Sb
Duplicate and/or spike duplicate	1 per 10 samples per matrix type	RPD $\leq$20%
Matrix spike	1 per 10 samples per matrix type	Percent recovery of 75%-125%
Serial dilution	1 per analysis per matrix type	See Section 9.12; 90%-110% of undiluted sample
Sample dilution	Dilute sample beneath the upper calibration limit and at least 5X the MDL	As needed

EPA/625/R-96/010a

Compendium of Methods for the Determination of Inorganic Compounds in Ambient Air

Compendium Method IO-3.6

DETERMINATION OF METALS IN AMBIENT PARTICULATE MATTER USING PROTON INDUCED X-RAY EMISSION (PIXE) SPECTROSCOPY

Center for Environmental Research Information
Office of Research and Development
U.S. Environmental Protection Agency
Cincinnati, OH 45268

January 1997

Method IO-3.6

Acknowledgements

This Method is a part of *Compendium of Methods for the Determination of Inorganic Compounds in Ambient Air* (EPA/625/R-96/060a), which was prepared under Contract No. 68-C3-0315, WA No. 2-10, by Midwest Research Institute (MRI), as a subcontractor to Eastern Research Group, Inc. (ERG), and under the sponsorship of the U.S. Environmental Protection Agency (EPA). Justice A. Manning, Center for Environmental Research Information (CERI), and Frank F. McElroy, National Exposure Research Laboratory (NERL), both in the EPA Office of Research and Development, were the project officers responsible for overseeing the preparation of this method. Other support was provided by the following members of the Compendia Workgroup:

- James L. Cheney, Corps of Engineers, Omaha, NB
- Michael F. Davis, U.S. EPA, Region 7, KC, KS
- Joseph B. Elkins Jr., U.S. EPA, OAQPS, RTP, NC
- Robert G. Lewis, U.S. EPA, NERL, RTP, NC
- Justice A. Manning, U.S. EPA, ORD, Cincinnati, OH
- William A. McClenny, U.S. EPA, NERL, RTP, NC
- Frank F. McElroy, U.S. EPA, NERL, RTP, NC
- William T. "Jerry" Winberry, Jr., MRI, Cary, NC

This Method is the result of the efforts of many individuals. Gratitude goes to each person involved in the preparation and review of this methodology.

Author(s)

- J. William Nelson, Florida State University, Tallahassee, FL
- Thomas Lapp, Midwest Research Institute, Cary, NC

Peer Reviewers

- David Brant, National Research Center for Coal and Energy, Morgantown, WV
- John Glass, SC Department of Health and Environmental Control, Columbia, SC
- David Harlos, Environmental Science and Engineering, Gainesville, FL

DISCLAIMER

This Compendium has been subjected to the Agency's peer and administrative review, and it has been approved for publication as an EPA document. Mention of trade names or commercial products does not constitute endorsement or recommendation for use.

Method IO-3.6
Determination of Metals in Ambient Particulate Matter Using Proton Induced X-Ray Emission (PIXE) Spectroscopy

TABLE OF CONTENTS

	Page
1. Scope	3.6-1
2. Applicable Documents	3.6-2
2.1 ASTM Standards	3.6-2
2.2 Other Documents	3.6-2
3. Summary Of Method	3.6-2
3.1 Transport of Ambient Air Particulate Filters and Impaction Surfaces	3.6-2
3.2 Multi-Element PIXE Analysis	3.6-2
4. Significance	3.6-3
5. Definitions	3.6-3
6. Descriptions of Air Sampling and Analytical Systems	3.6-4
6.1 Air Particulate Samples	3.6-4
6.2 Air Sampling Media (filters and impaction surfaces)	3.6-4
6.3 Air Particulate Samplers	3.6-4
6.4 Description of PIXE Analysis System	3.6-5
6.5 Laboratories with PIXE Capability	3.6-7
7. X-ray Spectra	3.6-7
7.1 X-ray Production	3.6-7
7.2 Computing Methods for Spectral Analysis	3.6-7
7.3 Elemental Mass Per Unit Area	3.6-7
7.4 Atmospheric Aerosol Concentrations	3.6-8
7.5 Detection Limits	3.6-8
8. Quality Control and Assurance	3.6-8
9. Precision and Accuracy	3.6-9
9.1 Precision	3.6-9
9.2 Accuracy	3.6-9
10. References	3.6-10

Chapter IO-3
CHEMICAL SPECIES ANALYSIS OF FILTER COLLECTED SPM

Method IO-3.6
DETERMINATION OF METALS IN AMBIENT PARTICULATE MATTER USING PROTON INDUCED X-RAY EMISSION (PIXE) SPECTROSCOPY

1. Scope

1.1 Suspended particulate matter (SPM) in air generally is a complex multi-phase system consisting of all airborne solid and low vapor pressure liquified particles having aerodynamic particle sizes from below 0.01-100 μm and larger. Historically, SPM measurement has concentrated on total suspended particulates (TSP), with no preference to size selection.

1.2 Research on the health effects of TSP in ambient air has focused increasingly on particles that can be inhaled into the respiratory system, i.e., particles of aerodynamic diameters less than 10 μm. The health community generally recognizes that these particles may cause significant, adverse health effects. Recent studies involving particle transport and transformation suggests strongly that atmospheric particles commonly occur in two distinct modes. The fine (<2.5 μm) mode and the coarse (2.5 to 10.0 μm) mode. The fine or accumulation mode (also termed the respirable particulate matter) is attributed to growth of particles from the gas phase and subsequent agglomeration, while the coarse mode is made of mechanically abraded or ground particles. Particles that have grown from the gas phase tend to grow rapidly to accumulation mode particles around 0.5 μm, which are relatively stable in the air. This range of particle sizes includes inorganic ions such as sulfate, nitrate, ammonia, combustion-form carbon, organic aerosols, metals, and other combustion products. Coarse particles, on the other hand, are mainly produced by mechanical forces such as crushing and abrasion. Coarse particles, therefore, normally consist of finely divided minerals such as oxides of aluminum, silicon, iron, calcium, and potassium. Coarse particles of soil or dust primarily result from entrainment by the motion of air or from other mechanical action within their area. The suspended particulate matter of urban atmospheres contains substantial quantities of trace metals sulfates, organic matter, and other non-metallic constituents.

1.3 The procedure for analyzing the elemental metal components in ambient air particulate matter is described in this Compendium method. The method is based upon active sampling using particulate matter samplers. The ambient air particulate is collected on Polycarbonate Track Etched (PCFE) filters, Teflon®, and Kapton® impaction surfaces, which are then analyzed by Proton Induced X-ray Emission Spectroscopy (PIXE). The trace element concentrations of each fraction are determined with nondestructive proton induced X-ray system. The data are processed by a computer to yield micrograms of trace element per square centimeter ($\mu g/cm^2$) and/or $\mu g/m^3$ of metal constituents in air.

1.4 The PIXE method is a form of elemental analysis based on the characteristics of X-rays and the nature of X-ray detection. The method uses beams of energetic ions, produced by an accelerator to generate a beam of protons in the 2-5 MeV range, to create inner electron shell vacancies. As these inner shell vacancies are filled by outer shell electrons, the characteristic X-rays emitted by this cascade effect can be detected by wavelength dispersion. In this method, the X-rays are detected by Lithium drifted Silicon (SiLi) detectors and the electrical pulses from the detector transferred to the pulse processor.

1.5 Computer codes are used to perform data reduction of the acquired X-ray spectrum to produce quantitative results. The method provides the sensitivity for accurate measurements at the nanogram or less level for many important trace metals in the urban atmosphere. The PIXE method has the capability to analyze a very small sample diameter in addition to evenly-distributed wide-area samples, which is advantageous because it permits analysis of individual particle size fractions collected with single orifice type cascade impactors.

2. Applicable Documents

2.1 ASTM Standards

- D1356 *Definition of Terms Related to Atmospheric Sampling and Analysis.*
- D1357 *Planning the Sampling of the Ambient Atmosphere.*

2.2 Other Documents

- *ASM Metals Handbook (9th Ed.) Vol 10. Materials Characterization.*
- U.S. Environmental Protection Agency, *Quality Assurance Handbook for Air Pollution Measurement Systems, Volume I: A Field Guide for Environmental Quality Assurance*, EPA-600/R-94/038a.
- U.S. Environmental Protection Agency, *Quality Assurance Handbook for Air Pollution Measurement Systems, Volume II: Ambient Air Specific Methods (Interim Edition)*, EPA-600/R-94/038b.
- *Scientific Publications of Ambient Air Studies (1-12).*

3. Summary Of Method

3.1 Transport of Ambient Air Particulate Filters and Impaction Surfaces.

The filters and impaction surfaces transported from the sampling site to the laboratory are shipped in holders specially designed to avoid contamination and minimize particle loss, then sealed in ziplock plastic bags. Care should be exercised when handling the samples so as to prevent tearing, punctures, and contamination.

3.2 Multi-Element PIXE Analysis

The trace element concentrations of each filter or impaction surface are determined using proton excitation with energy-dispersive X-ray detection by a Lithium drifted Silicon (SiLi) detector with associated amplifiers and a multichannel analyzer. The X-ray detection system consists of an X-ray spectrometer and a pulse processor. After the X-ray detection system is calibrated with gravimetric standards, the sample filters or impaction surfaces are placed in the instrument and analyzed. The data output from the system is processed by computer to yield micrograms of trace element per square centimeter ($\mu g/cm^2$) and subsequently $\mu g/m^3$ of air. PIXE is one of the more commonly used elemental

analysis methods because of its relatively low cost, nondestructive multi-element capabilities, high detection limits, and preservation of the filter for any additional chemical analyses.

4. Significance

4.1 PIXE analysis represents a broad range method for rapid measurement of air particulate matter collected by filtration and impaction. The mass of elements ranging from sodium to uranium are simultaneously measured with a few minutes bombardment and evaluated by computer code in a similar time. As such, PIXE is a useful tool in monitoring both the behavior of the aerosol in time as well as its distribution among particle sizes. Since the method requires samples in the microgram range, it allows the use of air samplers of modest size and cost.

4.2 The area of toxic air pollutants has been the subject of interest and concern for many years. The use of receptor models has resolved the elemental composition of atmospheric aerosol into components related to emission sources. The assessment of human health impacts resulting in major decisions on control actions by federal, state, and local governments are based on these data.

5. Definitions

[Note: Definitions used in this document are consistent with ASTM methods. All pertinent abbreviations and symbols are defined within this document at point of use.]

5.1 Accuracy. The agreement between an experimentally determined value and the accepted reference value.

5.2 Attenuation. Reduction of amplitude or change in wave form due to energy dissipation or distance with time.

5.3 Calibration. The of comparing a standard or instrument with one of greater accuracy smaller uncertainty for the purpose of obtaining quantitative estimates of the actual values of the standard being calibrated, the deviation of the actual value from the nominal value, or the difference between the value indicated by an instrument and the actual value.

5.4 Emissions. The total of substances discharged into the air from a stack, vent, or other discrete source.

5.5 Filter. A porous medium for collecting particulate matter.

5.6 Fluorescent X-rays (Fluorescent Analysis). Characteristic X-rays emitted by excited atoms.

5.7 Impaction Surface. A non-porous medium for collecting particulate matter.

5.8 Inhalable Particles. Particles with aerodynamic diameter of $< 10\ \mu m$ that can be inhaled into the human lung.

5.9 Interference. An overlap of spectral peaks due to two different elements.

5.10 Precision. The degree of mutual agreement between individual measurements, namely repeatability and reproducibility.

5.11 Standard. A concept that has been established by authority, custom, or agreement to serve as a model or rule in the measurement of quantity or the establishment of a practice or procedure.

5.12 Traceability to NIST. A documented procedure by which a standard is related to a more reliable standard verified by the National Institute of Standards Technology (NIST).

5.13 Uncertainty. An allowance assigned to a measured value to take into account two major components of error: systematic errors and random errors attributed to the imprecision of the measurement process.

6. Descriptions of Air Sampling and Analytical Systems

6.1 Air Particulate Samples

Aerosols, among other things, are comprised of particulates that are composed of elements in the form of compounds. These particulates range in size from submicron to >100 μm. The mass of elements in these particulates are almost never uniformly distributed across the size range of the aerosol. The character or composition of aerosols is due to their proximity to local sources and any regional transport associated with the air flow. The EPA has mandated that particular attention should be paid to the particulates that are deemed respirable. This respirable range, defined as <10 μm, is significant because this is the range of particles that can be retained in the lungs.

Because aerosols are dynamic, the aerosol with temporal resolutions ranging from 1 h to days should be studied. Numerous devices are available that can fractionate the aerosol while providing the temporal resolution desired.

6.2 Air Sampling Media (filters and impaction surfaces)

For optimum results using PIXE analysis, samples should be collected on the thinnest possible backing materials composed exclusively from low atomic number elements such as carbon, hydrogen, oxygen or nitrogen. PCTE (Polycarbonate Track Etched) and Teflon® filters are often used, as are impaction surfaces such as Kapton® and Mylar®. Thicknesses should not exceed 1,000 $\mu g/cm^2$ to keep the background during PIXE analysis low and therefore provide the best detection limits. Thick filters or thick particle deposits on the filter substrate will scatter the excitation protons and lower the signal-to-noise ratio.

6.3 Air Particulate Samplers

Samples collected by many samplers are analyzed via PIXE analysis. The most extensive use has been on those from the dichotomous sampler, as documented in Inorganic Compendium Method IO-2.2.

6.4 Description of PIXE Analysis System

A PIXE analysis system typically consists of an accelerator that produces a proton beam in the range of 2 to 5 MEV, a beam transport system, optics, and a chamber for analysis. The detectors monitor the X-rays generated and the number of protons (charge) used to generate those X-rays. Lithium drifted Silicon (SiLi) detectors are commonly used to allow simultaneous collection of a range of X-rays generated by collision of the proton beam with the sample atoms. A typical PIXE arrangement in a thin target mode is depicted in Figure 1. Following is a description of a typical PIXE installation.

6.4.1 Accelerator.

6.4.1.1 The vertical 4MV Van De Graff accelerator HVEC model KN, with stainless steel electrode acceleration tube, produces and directs beams into a 90° analyzing magnet. Beam energy calibration is based upon measurements of the accurately known $^{13}C(p,n)^{13}N$ and $^{7}Li(p,n)^{7}Be$ neutron threshholds. The magnetic field intensity is measured by a proton resonance gaussmeter with frequency readout for proton energy. The beam proceeds horizontally from the analyzing magnet via a 51 mm diameter beam line through a control slit/ beam collimator assembly and magnetic quadrupole lens into the target chamber area. Cyrogenic pumping is used at the target area, and a vacuum of 10^{-7} Torr is maintained during irradiation of targets.

6.4.1.2 Immediately behind the target chamber is the doorway to the control room, which houses both the accelerator controls and the data acquisition-analysis computer.

6.4.1.3 Samples are irradiated for a preset amount of charge as measured by a Tomlinson 2000 AEC rate meter and beam current integrator in which frequency output is gated off during busy periods in the counting system. Count rates are normally limited to 2,000 counts per second. For analysis of nonuniformly distributed samples, a homogeneous beam density is required, which is created with a quadrupole lens to focus the beam into a horizontal line that is then vertically swept across the collimators.

6.4.1.4 Automation of data acquisition in a PIXE analytic system is more than a convenience in that the accuracy required for quality assurance of final analytic results can best be achieved with a minimum of human operator intervention in a repetitive process. Analysis of air particulate samples requires accurate location of the samples. While a variety of encoders for angular position are available, an encoder was developed (based upon a 10-turn linear potentiometer) with advantages over standard units in cost, size, mounting convenience, and ease of interface to the computer.

6.4.2 Acquisition System Hardware.

6.4.2.1 The overall data acquisition system is diagrammed in Figure 2 and consists of a mixture of CAMAC and NIM modules, with the exception of the stepping motor interface. Beam current integration is conventional with termination of a run by a preset scalar that monitors charge (exclusive of dead periods). Target positioning in the bombardment chamber is controlled by the computer via the Alpha Products interface and stepping motor. The position information is read as a voltage from a potentiometer by an Alpha 12 Bit Analog Input card, as shown in Figure 3. A 10-turn potentiometer was chosen for its small size (length 19 mm, diam. 22 mm), resolution (0.007%), linearity (0.20%), and dependability when operated in vacuum. For the sample holding wheel, both high and low mechanical stops are accurately located in the chamber so that the built-in stops of the potentiometer are not used. For a single 7.5° step of the motor, a 600:1 overall gear ratio results in a 0.0125° angular displacement.

6.4.2.2 Under a calibration routine, the stepping motor is operated at a conservative rate (to insure dependable stepping) to establish the nonlinear characteristic of the particular potentiometer. This information is stored in a table of position versus voltage and thereafter utilized for correct angular positioning of the sample holding wheel. As shown in Figure 3, a panel meter is provided for general

indication to the operator; however, it does not reflect the nonlinearity correction. A switch is used to select meter calibration resistance so that streaker position is read in hours while a discrete eight position sample holder, used for individual targets, appears as digits 0 through 7.

6.4.3 Acquisition System Codes.

6.4.3.1 The software for the data acquisition is written in Microsoft Quick BASIC, version 3.0. This software was chosen for the following reasons:

- Allows structured code (e.g., IF...THEN...ELSE).
- Allows true subroutine and function calls (Format same as FORTRAN).
- Graphic functions are built into the language.
- Runs in "interpretive" mode for development and testing and uses compiled code for actual data acquisition.
- Direct access to absolute memory and I/O ports, enabling simple interface to special devices such as CAMAC, Alpha Products controller, etc.

6.4.3.2 The system is menu-driven and uses the cursor keys to control pull down menus. Both live mode and acquisition mode are available options. The system features many safeguards under the acquisition mode to protect data from being overwritten or erased inadvertently. Provisions for archival and retrieval are also available under the tape options menu. Complete chain of custody identifiers, including tape labels, run numbers, irradiation date and time, sample identification, client, job number, and duration of irradiation are required prior to beginning data acquisition. All identifiers are written on the disk, along with the spectrum, as a single record in a random access file. Thus, no data collected can be written without identification information. Each file is capable of storing up to 500 1024 channel spectra in approximately two megabytes of disk space. The tape archival/retrieval submenu utilizes an escape to DOS/Batch file execution process, so that any commercially available archival program can be used for long-term data crunching and storage. PCTOOLS Backup/Restore utilities are being used successfully for this purpose, but other packages could also be employed. The tape options submenu also includes the ability to store up to six archived files (each containing 500 spectra) on the disk and allows the user to select any archived tape for spectral display.

6.4.3.3 Under acquisition, mode control is transferred to the CAMAC crate until scaler presets for irradiation duration are reached. Update frequency is approximately every 3-5 s to the screen. Once irradiation is complete, data must be written on disk or erased before the next sample irradiation can begin. A complete log file is maintained, which stores all write-and-erase operations and is transparent to the user. Another useful feature available under the acquisition mode is the auto/manual option. This option allows the user to run one irradiation at a time or set up for automated irradiation and stepping to the next target so that multiple irradiations can be completed without further user intervention. This feature is particularly advantageous for sequential type samples.

6.4.3.4 The system is also capable of displaying up to three spectra simultaneously with options for multiple overlaying, addition, subtraction, square root, and linear scaling, expansion between markers, overlay of multiple spectra, and peak energy identification. Computer hardware requirements are an IBM PC with an 80386 or later CPU, serial and parallel ports, an external floppy drive, and at least a 20 megabyte hard disk.

6.5 Laboratories with PIXE Capability

Positive ion accelerators capable of proton energies of 2 million volts and above generally are used to bombard samples and produce the characteristic X-rays. Beam diameters range from μm to centimeters. Approximately 100 laboratories having PIXE capability were counted in 1990.

7. X-ray Spectra

7.1 X-ray Production

The air particulate sample is placed in an evacuated (or helium-filled) chamber and subjected to bombardment by the proton beam. The resulting characteristic X-rays are detected by an energy dispersive (SiLi) detector with an associated pulse processor and multichannel pulse height analyzer producing a display of the peaks. A spectrum for an indoor industrial aerosol is shown in Figure 4. For a typical system, the efficiency for producing and detecting of the X-rays is shown as Figure 5. Using K, L, and M lines, the elements F and above are observable with varying sensitivities.

7.2 Computing Methods for Spectral Analysis

Several well documented computer codes are available to perform data reduction of the acquired X-ray spectrum to produce quantitative results. A typical example of a code that produces an automated evaluation of spectra is the computer code HEX, originally named REX. This code uses a library of measured X-ray intensities for each element, as determined from gravimetric thin film standards, to simultaneously fit the entire spectrum. The quality of the fit is judged by a non-linear least squares analysis. The background continuum is fit by a ninth order constrained polynominal. Interferences are accounted for in the fitting process since the library contains all the lines of each element and their ratios to one another. In the example shown as Figure 4, lines are drawn through both the fit and the background.

7.3 Elemental Mass Per Unit Area

From the spectral analysis, the mass per unit area of an element is found using the previously measured efficiency curves (shown in Figure 4). PIXE is an absolute analysis method in that the efficiency curve is fundamentally due to the physics of the atom, as reflected in the X-ray production cross-section curve for a specific proton energy. Such curves are functions that mirror the changes in the electronic structure of the inner shells of atoms as the atomic number increases. Therefore, they provide an additional criteria by which the accuracy of gravimetric standards can be verified.

The measured efficiency in the calibration of a particular laboratory system also includes the effects of solid angle subtended by the detector and the absorption of X-rays in reaching the detector. The measured efficiency, referred to as the sensitivity curve, has units of counts per microgram per centimeter squared per microCoulomb of collected charge, cts/(μg/cm^2)/(μC). To convert the output of the spectral fitting to a quantifiable value, μg/cm^2, the number of integrated counts in a peak is divided by the sensitivity for that element and the amount of charge collected to acquire the spectrum. For non-uniform samples (such as those from impactors), a proton beam of uniform areal density envelops the sample,

which results in a measurement of the mass of the elements within the beam envelope instead of mass/area.

7.4 Atmospheric Aerosol Concentrations

The mass per unit volume of sampled air, $\mu g/m^3$, is found by multiplying the mass/area by the sample area and dividing by the volume of air V_{std} used to collect the sample, corrected to EPA's standard temperature (25°C) and standard pressure (760 mmHg). The sampled air volume is corrected to EPA reference conditions by:

$$V_{std} = V_s \left(\frac{T_{std}}{T_m}\right)\left(\frac{P_{bar}}{P_{std}}\right)$$

where:

V_{std} = volume of ambient air sampled at EPA-reference conditions, m^3.
V_s = volume of ambient air pulled through the sampler, m^3.
T_{std} = absolute EPA-reference temperature, 298°K.
T_m = average ambient temperature, °K.
P_{bar} = barometric pressure during sampling measurement condition, mmHg.
P_{std} = EPA-reference barometric pressure, 760 mmHg.

7.5 Detection Limits

A detection limit for each element can be calculated using the calibrated sensitivity curve (Figure 5); however, this figure is not a good figure of merit because it represents the best case sensitivity for single (or two element) standards on very thin backings with no consideration as to what other factors affect detection limits. A more realistic approach for typical detection limits for a PIXE analysis in aerosol measurement should also include the sampling substrate material as shown in Table 1. This table lists minimum detection limits (in ng/cm^2) for three commonly used filter substrates—Teflon® 2 μm pore size, mixed cellulose ester, and PCTE® 0.4 μm pore size. Minimum detection limit is defined here as the mass/area that is required to produce a peak spectral area that exceeds the background by a factor of three. In Table 1, the Teflon® filters detection limits are higher than those of PCTE and cellulose filters due largely to the additional background produced by inelastic scattering from the ^{19}F nucleus with the impinging proton at beam energies used in PIXE analysis.

A detection limit in terms of atmospheric concentration can only be stated if the corresponding sample flowrate and time of sample collection are specified.

8. Quality Control and Assurance

The objective of a laboratory quality control and assurance program is to assure the accuracy, precision, and reliability of the laboratory results for its customers. As such, the QA/QC program must be all-encompassing and start well before any analysis is ever performed. Numerous sources for

establishing a QA/QC program, including those outlined in the section on XRF analysis for NEA, Inc., have been established. Protocols for establishing such programs are also available from EPA, NIOSH, Industrial Hygiene Association, American Association for Laboratory Accreditation, ISO9000, ANSI/ASQC, etc.

9. Precision and Accuracy

9.1 Precision

Precision is defined as the ability for a measurement to be reproduced. Many factors can affect the stability of a measurement system that would alter its precision. Stability of the system parameters should be constantly monitored to ensure minimal variability. In PIXE these variables include beam energy, sample position, current integration, detector solid angle and efficiency, and system transmission. A good QA/QC program will include routine monitoring of these variables through the use of standards validation to ensure a high degree of precision. In general, a PIXE laboratory with such protocols in place should be able to maintain precision to about $\pm 1.5\%$ relative for its standards; that is, a standard of 5.0 $\mu g/cm^2$ should be reproducible from 4.925-5.075 $\mu g/cm^2$.

9.2 Accuracy

Accuracy is somewhat more difficult to define for aerosol samples. The usual procedure as outlined above would entail calibration with known thin film standards. These standards have a certain error associated with them in accordance with their methods of preparation. Many laboratories use thin films from MicroMatter, Inc., which certifies their values at $\pm 5\%$ based on gravimetric determinations. This uncertainty can be reduced somewhat based upon the known sensitivity curves for the elements, as described above under Section 7.3. Since the curves are continuous functions, outliers in the suite of standards used for calibration can be readily determined. In addition, standards obtained from other sources (for example, NIST) can further reduce this error. In general, considering all possible sources of error, analytical accuracies usually can be held to about $\pm 2.5\%$ for the standards.

Defining accuracies is somewhat more difficult for aerosol samples since errors associated with sampling procedures, as well as analytical errors due to self-absorption on large particles, are much more difficult to quantify. Although statistical procedures have been developed to correct for self-absorption on large particles, they are only approximations based upon a uniform distribution of the trace elements with the particles themselves. Of course, this assumption can never be known a priori and hence always remains an uncertainty. For small particles, this uncertainty is not a problem since self-absorption is minimal. The best methodologies for determining absolute accuracies for aerosol samples would have to involve inter-comparisons among samplers under various experimental conditions as well as inter-laboratory comparisons on the same filters to validate technique biases. Many such experiments have been conducted using many different types of samplers followed by analysis using ICP, AA, XRF, PIXE, and neutron activation. Absolute uncertainties of 10-20% on an element analysis are not uncommon in such comparisons.

10. References

1. Bauman, S., Nelson, J.W., and Hudson, G.M., "An Ion Beam Analysis Facility," *Proc. IEEE Trans. Nucl. Sci.*, NS-28:1374, 1981.

2. Cahill, T.A., "Particle Induced X-ray Emission", *ASM Metals Handbook*, 9th Ed., Vol. 10:213.

3. Bauman, S., Houmere, P.D., Leonard, R., and Nelson, J.W., "A Dedicated PIXE Analysis Laboratory Based upon a 4 MV Van De Graaff Accelerator," *Nucl. Inst. and Meth.*, Vol B3:119, 1984.

4. Johansson, J.E., et al., "Automation in PIXE Data Acquisition," *Nucl. Inst. and Meth.*, Vol B49:179, 1990.

5. Norman, L., et al., "A Bombardment Chamber for PIXE Analysis," *Nucl. Inst. and Meth.*, Vol B3:122, 1984.

6. Bauman, S., Houmere, P.D., and Nelson, J.W., "Cascade Impactor Aerosol samples for PIXE and PESA Analysis," *Nucl. Inst. and Meth.*, Vol. 181:499, 1981.

7. Cahill, T.A., Miranda, J. and Morales, R., "Survey of PIXE Programs - 1991," *Int. Jour. of PIXE*, Vol. 1:297, 1991.

8. Kaufmann, H.C., Akselsson, K.R., and Courtney, W.J., "REX - A Computer Programme for PIXE Analysis," *Nucl. Inst. and Meth.*, Vol. 142:251, 1977.

9. Nelson, R.O. and Nelson, J.W., "A Programable Controller for the Streaker® Air Sampler," *Nucl. Inst. and Meth.*, Vol. B22:353, 1987.

10. Cahill, T.A., et al., "The Stacked Filter Unit Revisited," *Visibility and Fine Particles*, Ed. C.V. Mathai, 213, 1990.

11. Johansson, S.A.E., and Campbell, J.L., *PIXE: A Novel Technique for Elemental Analysis*, Wiley, 1988.

12. Dzubay, T.G. (Ed.), *X-ray Fluorescence Analysis of Environmental Samples*, Ann Arbor Sci. Publ., 1977.

TABLE 1. DETECTION LIMIT COMPARISON OF VARIOUS FILTER MEDIA FOR PIXE ANALYSIS DETECTION LIMITS ARE EXPRESSED IN NG/CM^2

Element	Teflon®	Cellulose	PCTE
Na	94	79	75
Mg	62	46	42
Al	54	43	36
Si	47	38	30
P	48	35	26
S	43	31	22
Cl	41	30	21
K	33	26	15
Ca	27	25	14
Sc	26	27	15
Ti	22	18	11
V	18	11	6
Cr	13	7	3
Mn	10	4	3
Fe	9	3	2
Co	8	3	1
Ni	8	2	1
Cu	9	2	1
Zn	12	2	1
Ga	12	2	1
Ge	14	2	2
As	18	3	2
Se	21	3	2
Br	41	6	5
Rb	59	9	8
Sr	77	11	9
Y	95	13	11
Zr	117	15	14
Nb	148	19	18
Mo	190	24	23
Tc	243	30	28
Ru	297	37	33
Rh	348	43	41
Pd	446	59	53
Ag	551	83	68
Cd	670	83	69

Element	Teflon®	Cellulose	PCTE
In	761	100	92
Sn	906	127	112
Sb	1250	142	149
Te	103	120	55
I	97	94	50
Cs	84	75	46
Ba	75	61	36
La	69	48	28
Ce	60	39	20
Pr	53	31	16
Nd	50	26	17
Pm	42	22	19
Sm	40	19	10
Eu	35	16	10
Gd	34	15	9
Tb	31	14	8
Dy	32	13	8
Ho	31	10	5
Er	29	9	5
Tm	34	10	6
Yb	35	8	5
Lu	36	8	5
Hf	35	17	5
Ta	36	19	5
W	40	8	4
Re	44	13	6
Os	43	11	5
Ir	41	8	5
Pt	45	8	6
Au	48	8	6
Hg	48	8	6
Tl	55	9	7
Pb	59	9	6
Bi	59	9	8
Th	112	18	13
U	146	20	20

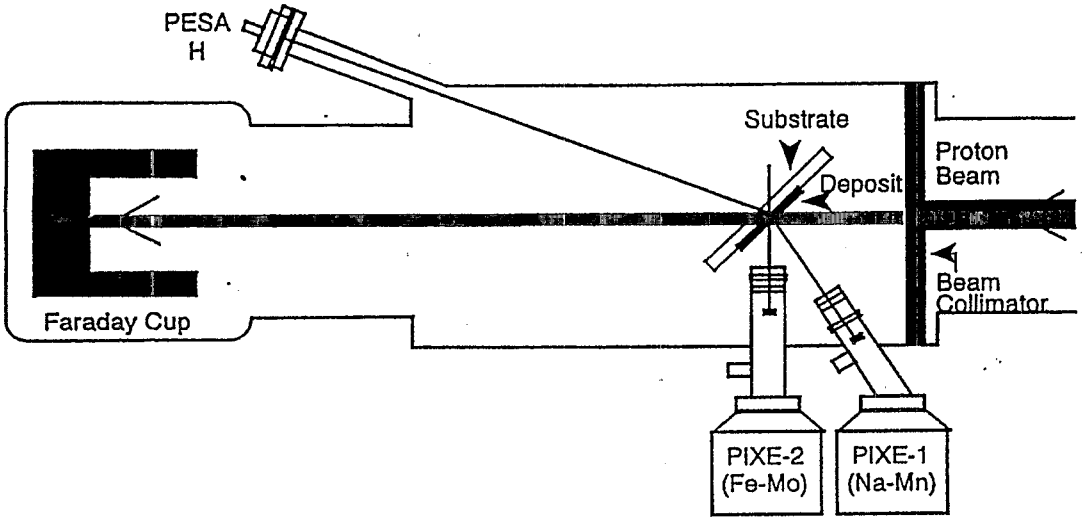

Figure 1. Schematic of a typical PIXE thin target system.

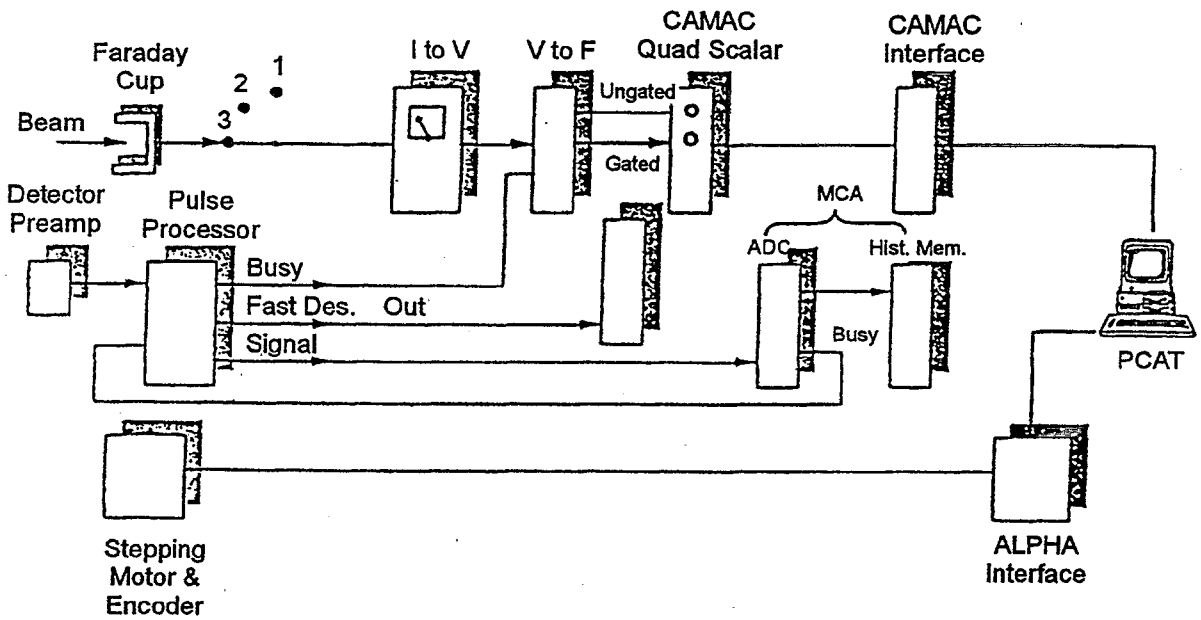

Figure 2. PIXE Data Aquisition System.

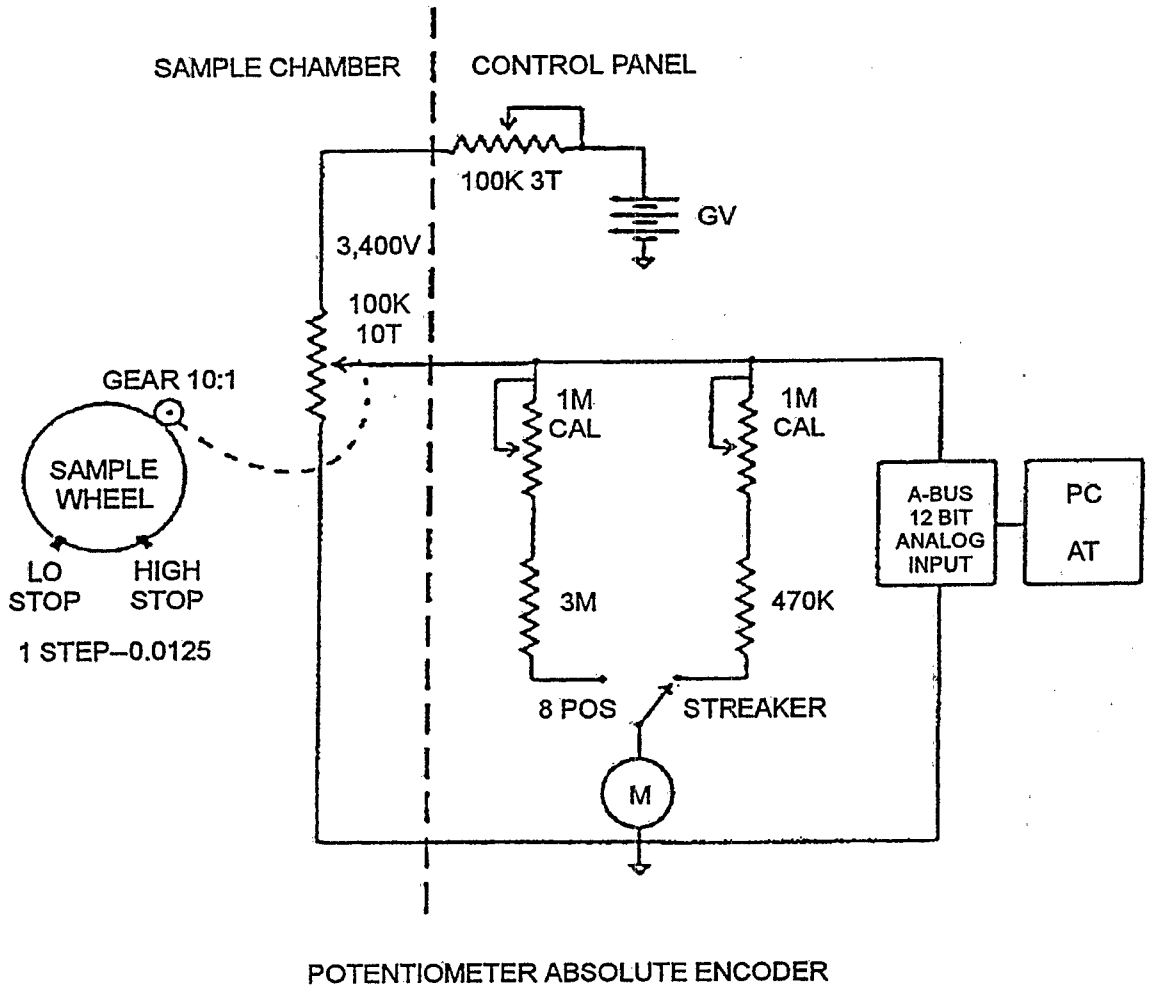

Figure 3. Absolute angular encoder based upon a ten-turn linear potentiometer.

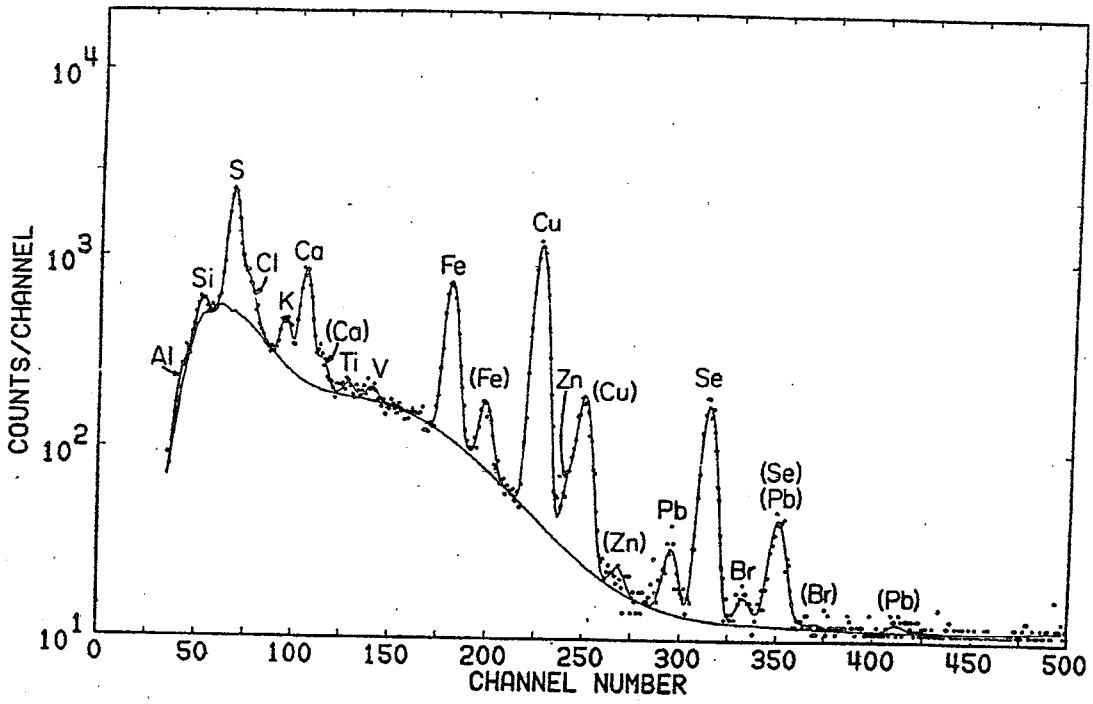

Figure 4. Spectrum for an indoor industrial aerosol.

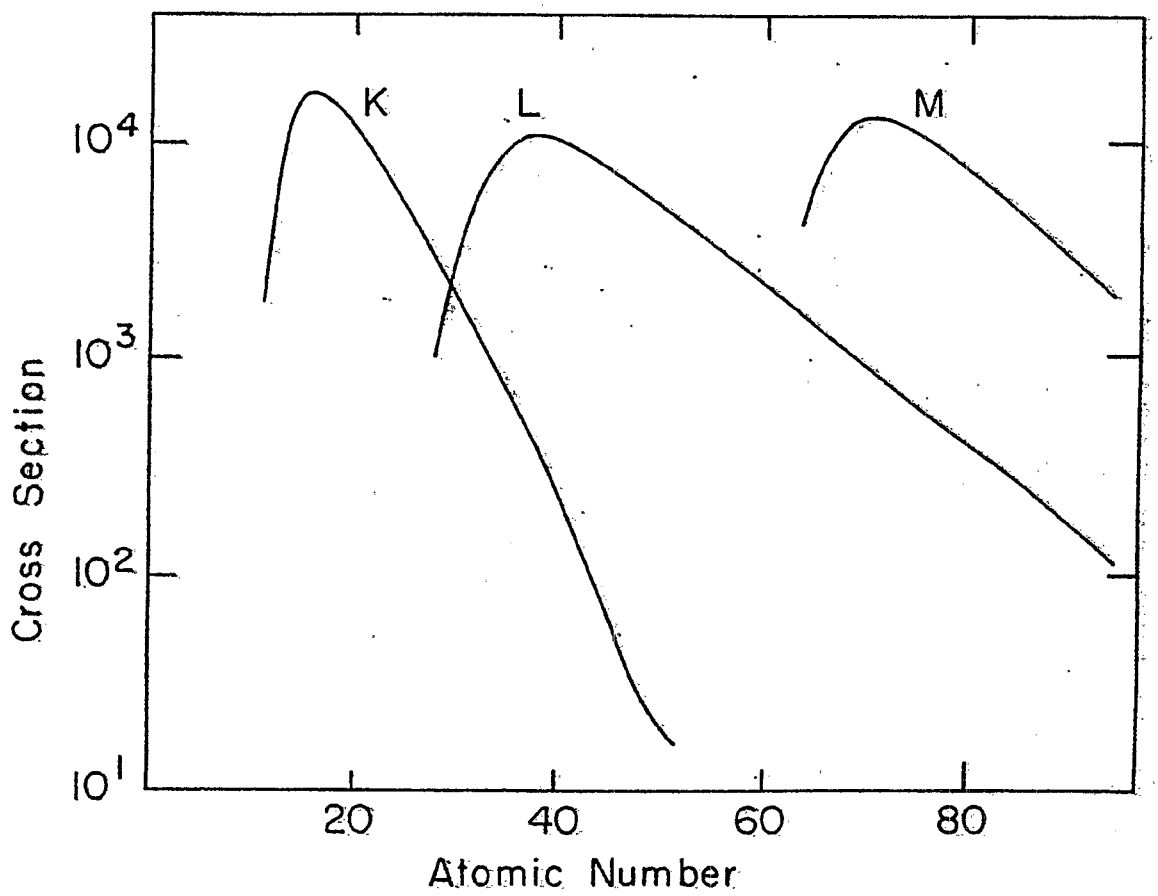

Figure 5. Efficiency for production and detection of x-rays.

EPA/625/R-96/010a

Compendium of Methods for the Determination of Inorganic Compounds in Ambient Air

Compendium Method IO-3.7

DETERMINATION OF METALS IN AMBIENT PARTICULATE MATTER USING NEUTRON ACTIVATION ANALYSIS (NAA) GAMMA SPECTROMETRY

Center for Environmental Research Information
Office of Research and Development
U.S. Environmental Protection Agency
Cincinnati, OH 45268

January 1997

Method IO-3.7

Acknowledgements

This Method is a part of *Compendium of Methods for the Determination of Inorganic Compounds in Ambient Air* (EPA/625/R-96/060a), which was prepared under Contract No. 68-C3-0315, WA No. 2-10, by Midwest Research Institute (MRI), as a subcontractor to Eastern Research Group, Inc. (ERG), and under the sponsorship of the U.S. Environmental Protection Agency (EPA). Justice A. Manning, Center for Environmental Research Information (CERI), and Frank F. McElroy, National Exposure Research Laboratory (NERL), both in the EPA Office of Research and Development, were the project officers responsible for overseeing the preparation of this method. Other support was provided by the following members of the Compendia Workgroup:

- James L. Cheney, Corps of Engineers, Omaha, NB
- Michael F. Davis, U.S. EPA, Region 7, KC, KS
- Joseph B. Elkins Jr., U.S. EPA, OAQPS, RTP, NC
- Robert G. Lewis, U.S. EPA, NERL, RTP, NC
- Justice A. Manning, U.S. EPA, ORD, Cincinnati, OH
- William A. McClenny, U.S. EPA, NERL, RTP, NC
- Frank F. McElroy, U.S. EPA, NERL, RTP, NC
- William T. "Jerry" Winberry, Jr., MRI, Cary, NC

This Method is the result of the efforts of many individuals. Gratitude goes to each person involved in the preparation and review of this methodology.

Author(s)

- Jack Weaver, North Carolina State University, Raleigh, NC

Peer Reviewers

- David Brant, National Research Center for Coal and Energy, Morgantown, WV
- Ron Fleming, Department of Nuclear Engineering, University of Michigan, Ann Arbor, MI
- Joseph Lambert, Raleigh, NC

DISCLAIMER

This Compendium has been subjected to the Agency's peer and administrative review, and it has been approved for publication as an EPA document. Mention of trade names or commercial products does not constitute endorsement or recommendation for use.

Method IO-3.7
Determination of Metals in Ambient Particulate Matter Using Neutron Activation Analysis (NAA) Gamma Spectrometry

TABLE OF CONTENTS

	Page
1. Scope	3.7-1
2. Applicable Documents	3.7-2
2.1 ASTM Documents	3.7-2
2.2 U.S. Government Documents	3.7-2
2.3 Other Documents	3.7-3
3. Summary of Method	3.7-3
4. Significance	3.7-3
5. Interferences	3.7-4
6. Safety	3.7-5
6.1 Chemical Toxicology	3.7-5
6.2 Radioactive Safety	3.7-5
7. Definitions	3.7-5
8. Apparatus and Equipment	3.7-6
8.1 Research Nuclear Reactor	3.7-6
8.2 Gamma Spectroscopy System	3.7-6
9. Reagents and Consumable Materials	3.7-7
9.1 Reagents	3.7-7
9.2 Standard Stock Solutions	3.7-8
9.3 Blanks	3.7-8
9.4 Quality Control Standard Reference Materials	3.7-8
9.5 Sample Irradiation Vials	3.7-8
10. Sample Receipt in the Laboratory	3.7-8
11. Calibration	3.7-9
12. Quality Control	3.7-9
13. Procedure	3.7-12
13.1 Unknown Sample Preparation	3.7-12
13.2 Metal Blank Preparation	3.7-12
13.3 Duplicate Sample Preparation	3.7-12
13.4 Standards Preparation	3.7-13
13.5 Irradiation and Counting for Short - Lived Isotopes	3.7-13
13.6 Irradiations and Counting for Medium and Long - Lived Isotopes	3.7-13
14. Calculations and Data Processing	3.7-13
15. Precision and Accuracy	3.7-14
16. References	3.7-15

Chapter IO-3
CHEMICAL SPECIES ANALYSIS OF FILTER-COLLECTED SPM

Method IO-3.7
DETERMINATION OF METALS IN AMBIENT PARTICULATE MATTER USING NEUTRON ACTIVATION ANALYSIS (NAA) GAMMA SPECTROMETRY

1. Scope

1.1 The area of toxic air pollutants has been the subject of interest and concern for many years. Recently the use of receptor models has resolved the elemental composition of atmospheric aerosol into components related to emission sources. The assessment of human health impacts resulting in major decisions on control actions by federal, state, and local governments is based on these data. Accurate measures of toxic air pollutants at trace levels are essential to proper assessments.

1.2 Suspended particulate matter (SPM) in air generally is a complex, multi-phase system of all airborne solid and low vapor pressure liquified particles having aerodynamic particle sizes from below 0.01-100 μm and larger. Historically, SPM measurement has concentrated on total suspended particulates (TSP), with no preference to size selection.

1.3 The most commonly used device for sampling TSP in ambient air is the high volume (hi-vol) sampler, which consists essentially of a blower and a filter and usually operates in a standard shelter to collect a 24-h sample. The sample is weighed to determine the concentration of TSP and is usually analyzed chemically to determine the concentration of various inorganic compounds. The hi-vol is considered a reliable instrument for collecting TSP in ambient air. When EPA first regulated TSP, the national ambient air quality standard (NAAQS) was stated in terms of SPM with aerodynamic particle sizes of <100 μm captured on a filter as defined by the hi-vol TSP sampler. Therefore, the hi-vol TSP sampler was the reference method. The method is codified in 40 CFR 50, Appendix B.

1.4 More recently, research on the health effects of TSP in ambient air has focused increasingly on those particles that can be inhaled into the respiratory system, i.e., particles of aerodynamic diameter of <10 μm. These particles are referred to as PM_{10}. The health community generally recognizes that these particles may cause significant, adverse health effects. Therefore, the primary NAAQS for SPM is now stated in terms of PM_{10} rather than TSP. The reference method for PM_{10} is codified in 40 CFR 50, Appendix J, and specifies a measurement principle based on extracting an ambient air sample with a powered sampler that incorporates inertial separation of PM_{10} size range particles and collection of these particles on a filter for a 24-h period. Again, the sample is weighed to determine PM_{10} concentration and is usually analyzed chemically to determine the concentration of various inorganic compounds.

1.5 Current research strongly suggests that atmospheric particles commonly occur in two distinct modes: the fine (<2.5 μm) mode and the coarse (2.5-10.0 μm) mode. The fine or accumulation mode (also termed the respirable particulate matter) is attributed to the growth of particles from the gas phase and subsequent agglomerization, whereas the coarse mode is made of mechanically abraded or ground particles. Because of their initially gaseous origin, the fine range of particle sizes includes inorganic ions such as sulfate, nitrate, and ammonia as well as combustion-form carbon, organic aerosols, metals, and

other combustion products. Coarse particles, on the other hand, normally consist of finely divided minerals such as oxides of aluminum silicate, iron, calcium, and potassium.

1.6 Airborne particulate materials retained on a sampling filter, whether TSP or PM_{10} size fractions, may be examined by a variety of analytical methods. This method describes the procedures for the neutron activation analysis (NAA) technique. The NAA method provides analytical procedures for determining percent, ppt, ppm, or ppb levels of 40-50 elements that might be captured on typical glass fiber filters used in hi-vol and dichotomous sampling devices. The NAA is not matrix dependent and is therefore highly applicable for elemental analysis of a broad spectrum of particulate material. A summary of elements for which NAA is a suitable analysis technique is provided in Table 1.

1.7 NAA should be performed by nuclear applications engineers, radiochemists, and inorganic chemists with related nuclear expertise. A minimum of 2-year's experience with NAA (of all matrices of interest) is recommended.

2. Applicable Documents

2.1 ASTM Documents

- D4096 *Application of High Volume Sample Method For Collection and Mass Determination of Airborne Particulate Matter.*
- D1356 *Definition of Terms Related to Atmospheric Sampling and Analysis.*
- D1357 *Practice For Planning the Sampling of the Ambient Atmosphere.*
- D2986 *Method for Evaluation of Air Assay Media by the Monodisperse DOP (Dioctyl Pthalate) Smoke Test.*

2.2 U.S. Government Documents

- STP598 Calibration in Air Monitoring
- U.S. Environmental Protection Agency, *Quality Assurance Handbook for Air Pollution Measurement Systems, Volume I: A Field Guide for Environmental Quality Assurance*, EPA-600/R-94/038a.
- U.S. Environmental Protection Agency, *Quality Assurance Handbook for Air Pollution Measurement Systems, Volume II: Ambient Air Specific Methods (Interim Edition)*, EPA-600/R-94/038b.
- "Reference Method for the Determination of Particulate Matter in the Atmosphere," *Code of Federal Regulations*, 40 CFR 50, Appendix B.
- "Reference Method for the Determination of Particulate Matter in the Atmosphere (High Volume Method)," *Code of Federal Regulations*, 40 CFR 50, Appendix J.
- "Reference Method for the Determination of Particulate Matter in the Atmosphere (PM_{10} Method)," *Code of Federal Regulations*, 40 CFR 50, Appendix J.
- "1978 Reference Method for the Determination of Lead in Suspended Particulate Matter Collected From Ambient Air," *Federal Register* 43 (194):46262-3.
- *Test Methods for Evaluating Solid Waste, Method 9022*, EPA Laboratory Manual, Vol. 1-A, SW-846.

2.3 Other Documents

- Crouthamel, C.E., et. al., *Applied Gamma Ray Spectrometry*, Pergamon Press, 1975.
- Lederer, C.M., et al., *Table of the Isotopes*, Sixth Edition, John Wiley and Sons, 1967.
- Shapiro, J., *Radiation Protection*, Harvard University Press, 1972.
- Faw, R., and Shultis, J., *Radiological Assessment*, Prentice - Hall, 1993.
- Heydorn, K., *Neutron Activation Analysis for Clinical Trace Element Research*, Vol. 1, CRC Press, 1984.
- Burn, R., *Research, Training, Test and Production Reactor Directory*, American Nuclear Society, Third Edition, 1988.

3. Summary of Method

3.1 NAA is an analytical technique dependent on the measurement of the number and energy of gamma and X-rays emitted by the radioactive isotopes produced in the sample matrix by irradiation with thermal neutrons from a nuclear reactor. Typically, the sample matrix plus appropriate blanks, SRMs, duplicates, and standards of the elements of interest are irradiated for a selected time period in the neutron flux core region of a research nuclear reactor. After irradiation and an appropriate radioactive decay, a gamma count-energy spectrum is obtained by counting the sample on a nuclear gamma spectroscopy detection system.

3.2 The NAA technique is qualitative in the sense that it incorporates the detection of characteristic radioisotopes (the neutron-induced radioactivity of each trace element emits a characteristic gamma ray energy spectrum, hence individual nuclear fingerprint); it is quantitative in that the detection system records not only the energy of a given gamma emission, but also the number of emissions per unit time.

3.3 Quantitative analysis is obtained by comparing the number of characteristic X-ray or gamma-rays of the unknown with the number determined for a standard. Interferences with a few elements must be corrected for using the intensity of related interference gamma peaks and computer programs for processing peak subtraction. Likewise, computer programs should also correct for sample count time, radioactive decay, sample weight or volume, reactor flux, and detector geometry. Calibration and efficiency of the detection system must be monitored throughout the counting period. Method detection limits (MDLs) for elements detected by NAA are listed in Table 2.

3.4 Method detection limits are intended as a guide to instrumental limits of a system optimized for multi-element determinations and employing commercial instrumentation and computer programs. However, actual MDLs are dependent on the sample matrix, instrumentations, and selected operating conditions of the particular nuclear research reactor.

4. Significance

4.1 In general, NAA is a versatile and non-labor intensive analytical technique. Liquids, solids, and gases can be analyzed by NAA. It is a multi-element technique in that many elements can be analyzed simultaneously in a given sample spectrum without changing or altering the apparatus as is necessary in

atomic absorption, etc. Importantly, special sample preparations, such as digestion or extractions, are not required, and therefore the NAA method is non-destructive, i.e., the integrity of the sample is not changed in any manner by prechemistry or the addition of any foreign materials for irradiation. Thus, the problem of reagent-introduced contaminates is completely avoided. For most elements of interest, the analytical approach for NAA requires little if any post-irradiation chemistry; thus, the amount of technician contact per sample analysis is reduced considerably. The NAA method is fast and convenient; for many elements, several samples can be irradiated at a given time and counted later on a given decay schedule.

4.2 Finally, the NAA method offers high sensitivity to trace elements. The sensitivity obtained by activation analysis is a function of the neutron cross section of the element in question, available neutron flux, length of irradiation, resolution of the detector, matrix composition, and the total sample size. Hence, increasing neutron fluxes, increased irradiation times, and major advances in nuclear technology in the areas of increased efficiency and resolution have pushed the detection limits of most elements to very low levels.

5. Interferences

5.1 General Interferences

5.1.1 Elemental Nuclear Parameters. The radioactive elements, their related isotopes, and their nuclear parameters are shown in Table 3. Interferences with NAA occur in three primary categories as described in the following paragraphs.

5.1.2 Sensitivity. Sensitivity can decrease when an element exists in sufficient quantity to produce high gamma activity in the filter sample that masks the lower gamma activity from other elements of interest. The primary correction for this situation (when feasible) is to pick irradiation times and decay times that emphasize the elements of interest and de-emphasize the interfering element.

5.1.3 Similar Gamma Ray Emissions. This situation exists when two radionuclides emit a gamma ray of similar energy that interferes with each other. Possible corrections to this situation are as follows:

- Utilize different irradiation and decay times.
- Use high-quality, high-resolution HPGE or GeLi detectors to resolve close peak, especially when using sophisticated computer programs that use iterative least square curve fitting and peak search routines.
- Use computer programs that locate a "clean" gamma photopeak of the interference and use its net area and known nuclear characteristics to calculate and subtract the interfering peak net area from the gamma ray of interest along with percent error calculations.

5.2 Duplicate Radionuclide Production

This interference occurs when the nuclei of 2 unrelated elements absorb a neutron and produce the exact same radionuclide. The correction is to use the net area of a gamma peak of another radionuclide associated with the interference and the known nuclear characteristics produced by the interference parent to calculate the actual production rates of the interference and subtract from the radionuclide gamma peak of interest along with percent error calculations.

6. Safety

6.1 Chemical Toxicology. The toxicology or carcinogenicity of all chemicals used in this method is not completely known. Each chemical should be regarded as a potential health hazard, and exposure to these compounds should be as low as reasonably possible. Each laboratory is responsible for maintaining a current awareness file of OSHA regulations regarding the safe handling of the chemicals specified in this method. A reference file of material data handling sheets (MDS) also should be available to all personnel involved in the chemical analysis. All chemicals should have the purchase date and expiration date written on the container. Each professional or technician working in the laboratory should participate in yearly chemical safety refresher courses.

6.2 Radioactive Safety

6.2.1 The radiological operations should be under the direction of a radiological safety officer or health physicist.

6.2.2 The laboratory must have an Agreement State or NRC license to possess controlled levels of radioactivity.

6.2.3 All professionals and lab technicians should be officially trained, certified, and documented to work with radioactive materials.

6.2.4 Radiation surveys of the lab area work stations should be performed daily to properly limit the dose exposure to lab personnel and to lower the background levels of radioactivity subject to the nuclear detector systems used for NAA.

6.2.5 Contamination swipes of work areas should be performed weekly to protect employees from internal uptake and to prevent contamination of the nuclear detectors or specific samples being counted.

7. Definitions

[Note: Definitions used in this document are consistent with ASTM methods. All pertinent abbreviations and symbols are defined within this document at point of use.]

7.1 Instrument Detection Limit (IDL). The concentration equivalent of the element, which is equal to three times the standard deviation of the blank.

7.2 Method Detection Limit (MDL). The minimum concentration of the element that can be identified, measured, and reported with a 99% confidence level that the element concentration is greater than zero.

7.3 Laboratory Reagent Blank (LRB) (Preparation Blank). An aliquot of water that is treated exactly as a sample, including exposure to all labware, equipment, solvents, reagents, etc. that are used with other samples. The LRB is used to determine if the method analytes or other interferences are present in the laboratory environment, the reagents, or apparatus.

7.4 Internal Standard. Pure elements added to a solution in known amounts and used to measure the relative responses of other elements that are components of the same solution. The internal standard must be an element that is not a sample component.

7.5 Stock Standards Solution. A concentrated solution containing one or more elements prepared in the laboratory using certified reference compounds or purchased from a reputable commercial source.

7.6 Calibration Check. A radioactive standard (i.e., Ra^{226}) used to determine acceptable instrument performance prior to calibration and sample analyses.

7.7 Laboratory Fortified Blank (LFB). An aliquot of reagent water to which known quantities of the method elements are added in the laboratory. The LFB is analyzed exactly like the sample, and its purpose is to determine whether method performance is within acceptable control limits.

7.8 Laboratory Fortified Sample Matrix (LFM). An aliquot of an environmental sample to which known quantities of the method elements are added in the laboratory. The LFB is analyzed exactly like the sample, and its purpose is to determine whether the sample matrix contributes bias to the analytical results. The background concentrations of the elements in the sample matrix must be determined in a separate aliquot and the measured values in the LFM corrected for the concentrations found.

7.9 Quality Control Standard Reference Material (SRM's). Elementally certified standard reference materials (NIST, NRC, IAEA, etc.) of a matrix similar to the unknowns that are analyzed as blind control samples with the knowns.

8. Apparatus and Equipment

The basic instrumentation for performing neutron activation analysis consists of a nuclear reactor for irradiating the samples, nuclear detectors for detecting the gamma emissions, and various types of multi-channel analyzer systems that range from simple data acquisition systems to complex computerized data acquisition and processing systems. A general summary of the basic NAA process is shown in Figure 1.

8.1 Research Nuclear Reactor

8.1.1 The research nuclear reactor must have a minimum thermal neutron flux: 1×10^{13} n/cm^2-s, open pool water cooled type containment, rotating, out-of-core, wet sample exposure facilities for uniform sample irradiation for 1 to 24 h, and pneumatic irradiation facilitates for fast 10 s to 60 min sample irradiations.

8.1.2 Primary consideration must be given to accurately measuring the thermal neutron flux distribution within the volume that is intended for irradiation of the samples. Many conditions cause a distortion of the flux; hence, irradiation facilities need to be found where the flux does not vary over a few percent (2% or less). If this situation does not exist, small flux monitors must be located in the different sample positions for monitoring and counting the flux and making appropriate tables of flux correction factors.

8.2 Gamma Spectroscopy System

8.2.1 Large Volume Lithium-Drifted Coaxial Ge(Li) or HPGe Nuclear Detectors. The primary component in a gamma spectroscopy system is the gamma detector. This detector typically consists of a coaxial-shaped lithium-drifted germanium Ge(Li) crystal or a high-purity HPGe coaxial detector mounted in a vacuum tight cryostat, a liquid-nitrogen Dewar, and a very low noise preamplifier, all in one complete unit. These detectors are very sensitive to a wide energy range of gammas, from 0-3.0 MeV. Typical efficiencies for commercial detectors run from 10-50% with some possessing up to 100% efficiency. These detectors typically have an energy resolution of 1.7-2.2 keV and are capable of effectively providing a clear definitive response to the many different energy gammas in a typical irradiated sample. Due to their sensitivity to gamma rays from natural background radioactivity, Ge(Li)

and HPGe detectors must be shielded by several inches of lead with a copper - cadmium inner liner. The nuclear characteristics of all radionuclides detectable on detectors such as these are shown in Table 4.

8.2.2 Low Energy Photon Detector (LEPD). A supplementary component of the gamma spectrometry system is a low energy photon detector (LEPD or LEPS). This detector is sensitive to low-energy photons (γ-rays and X-rays) and resolves X-ray events that are close in energy value. Since many elements, when bombarded with thermal neutrons in a reactor, give off X-rays and low energy γ-rays, the LEPD offers increased NAA sensitivity to many trace metals. The use of X-ray spectrometry when combined with a low energy photon detector has several notable advantages over routine γ-ray spectrometry. The isotopes decay with characteristic X-rays unique to the element; gamma decays are not necessarily so. Therefore, in an X-ray spectrum of a given matrix, many elements can be determined without the overlapping of photopeaks that sometimes occurs in γ-ray spectrometry. Another useful characteristic of the LEPD is that it is "blind" to the higher energy γ-rays emitted by the radioactive matrix. That is, the higher-energy photons tend to pass through the detector without interaction, while the low-energy particles are absorbed. The low-energy photon detector plus Dewar is very similar in size and shape to the standard large-volume Ge(Li) detectors. The LEPD unit is constructed of a virtually windowless (less than 1μm Ge) lithium-drifted germanium crystal wafer and is maintained at liquid nitrogen temperatures by a cryosorption pumping and a liquid nitrogen Dewar. The detector has a standard end cap window of 5 mils of beryllium. Such a detector, when coupled with a 4096 or greater multichannel analyzer, has a useful range from 3 to approximately 600 keV. At above 500-600 keV, the relative photopeak efficiency drops off, but the resolution remains sufficient to separate photopeaks as close as 3 keV. At 270 keV, photopeaks as close as 750 keV can be separated. Typical resolution at 5.9 keV is 225 eV, and at 122 keV, it is 600 eV. The nuclear parameters of elements detected by LEPD detectors are illustrated in Table 5.

8.2.3 Data Acquisition Systems. The commercial multichannel analyzer (MCA) is a device whose primary function is to sort and store the myriad of proportion signals coming from the nuclear detector due to gamma interaction with the detector. Based upon the calibration of the system (usually 0 - 2 MeV for Ge(Li) and 0 - 200 keV for the LEPD), the analyzer will sort incoming signals according to their energy and store them in an appropriate memory bit or "channel." Such a system typically might have 4096 or 8192 channels and be attached to microprocessors that have simple data reduction routines for determining net X-rays counts in a peak and the X-rays energy of the peak. The more complex MCA data acquisition systems consist of either: (1) multiple 4096 channel analyzers connected to PC type computers with sufficient storage to have a variety of peak search and radionuclide identification routines, a library of reference standards, half-life decay corrections, etc.; the final product is a report listing the various experimental parameters of the sample and a listing of μg/g, etc. of each element present in the sample plus the error limits; or (2) multi-job, multi-task data acquisition processing systems, which allow flexibility in designing specific data acquisition areas for independently operating many separate nuclear detector systems with built-in microprocessors and minicomputers. The final product is the same as that for the PC type gamma spectroscopy systems.

9. Reagents and Consumable Materials

9.1 Reagents

[Note: For purposes such as cleaning the hi-purity irradiation vials, acidifying solutions for storage, and conducting standard dilution procedures, etc., sources of high-purity nitric acid should be maintained.]

9.1.1 Nitric Acid, high-purity, concentrated (sp.gr.1.41). Commercial Sources.

9.1.2 Water. ASTM Type I water (ASTM D1193) for use in cleaning procedures, standard dilutions, etc.

9.2 Standard Stock Solutions

[Note: High-quality commercial grades of (atomic absorption) elemental standard solutions plus mixed element standards can be effectively used.]

9.2.1 For the elements Ti, I, Cu, Mg, Mn, Na, K, Cl, V, and Al, the acid base for the solution must be nitric acid. Both HCl and H_2SO_4 produce interferences in the standards for short-lived elements that are not acceptable.

9.2.2 For all other elements, either a HNO_3 or HCl acid base is suitable.

9.2.3 Both single and multi-element standards should be prepared in bulk in the different size irradiation container volumes used to eliminate stability problems.

9.3 Blanks

A laboratory reagent blank (LRB) is used to determine potential contamination problems and to determine background levels of the elements of interest. The LRB must contain all the reagents in the same volumes as used in preparing the samples. It must be carried through the sample preparation scheme.

9.4 Quality Control (QC) Standard Reference Materials

The SRMs must be obtained from commercial (outside the lab) and federal sources of certified standard reference materials. Certification documents and expiration dates must be maintained.

9.5 Sample Irradiation Vials

Pre-cleaned, high-purity Kartell or Olympic linear polyethylene vials in the 1 mL, 2.5 mL, 5 mL, 10 mL, and 20 mL size should be maintained. A device needs to be maintained in a clean hood for heat-sealing all sample vials.

10. Sample Receipt in the Laboratory

As you are notified of their availability, personnel within the neutron activation analysis laboratory shall receive the samples as they are mailed or hand carried. Upon receipt of samples, assign each job a control number and the chain of custody documents. Assign all samples an ascending NAA Lab number in the NAA Laboratory Sample Receipt Log. Store all samples requiring refrigeration in refrigerator-freezers. All other samples should be stored under cool, dry, and dark conditions in laboratory storage cabinets in the restricted areas of the laboratory. (Samples requiring desiccant storage are stored in that manner). Limit all contact with these samples to only the personnel assigned to this project.

11. Calibration

Ge(Li) or HPGe gamma spectroscopy detection systems are generally operated on an energy range of 0 to 2000 keV utilizing 4096 to 8192 channels of data acquisition storage. The three calibration items of daily interest are energy calibration, detector peak resolution, and efficiency stability.

11.1 Maintain a radioactive source (i.e. Ra-226 or an NIST multi-radionuclide source) that provides gamma emissions from 50-1,750 keV.

11.2 Maintain this calibration source in a condition that allows a fixed, unchanged geometry that can be duplicated exactly each time it is used.

11.3 Arrange for computer programs that allow daily comparisons of an initial first count of this standard to all future daily counts.

11.4 Set up a daily QA/QC procedure for each detector that has the following:

- Duplicated geometry.
- Duplicated count time.
- Duplicated computer program parameters.
- Duplicated count comparisons that are compared to initial settings.

11.5 Count the calibration standard and process data.

11.6 For the energy calibration check, review all the designated gamma peak measurements to determine that all peaks are within $\pm$ 0.5 keV of their true value.

11.7 For the peak resolution check, review all peaks for anomalies, but concentrate on the 1,172-1,333 keV region to insure a peak resolution of 2.2 keV or less.

11.8 For the efficiency resolution check, compare peaks in the 500 to 600 keV and the 1100 to 1300 keV energy range to determine that the net gamma count in those peaks (corrected for decay) have not varied more than $\pm$5.0% from the initial preset measured values.

12. Quality Control (QC)

Neutron activation analysis methods shall be controlled by a documented, certified QA/QC program utilizing validated SOPs and QA/QC document forms. A series of standard operating procedures must be defined in the following areas for quality control of the complete analytical procedure. Documented performance records showing quality of performance shall be maintained.

12.1 When samples arrive, verify them against shipping documents. Notify discrepancies and assign control numbers. Record the samples in the entry log, and assign appropriate (matrix related) storage.

An analytical job plan should also be formatted. The following control forms and concepts should be used:

- Sample Receipt Control Numbers.
- Chain of Custody Document Form.
- Unique Sample I.D. Numbers.
- Daily Freezer and Refrigerator Temperature Checks recorded on forms.
- Controlled Access Areas.

12.2 Maintain all laboratory areas in a controlled, clean, and organized atmosphere. Use the following control forms:

- Daily Hood System Flow Checks.
- Daily Radiation Surveys of the Lab Work Area recorded on forms.
- Weekly Laboratory Radiation Swipe Tests recorded on forms.

12.3 All employees of the laboratory shall have documented training programs. Use the following control forms:

- Employee Systems Operation Certifications (annual).
- Employee Update Training (annual).
- Employee SOP Certification.

12.4 Prepare all analytical standards and unknowns (as required) in class 100 clean hood conditions according to documented instructions. Use the following control forms:

- Unknown Preparation Form.
- Standard Preparation Form.
- SRM, Blank, and Duplicates Preparation Form.
- Shelf-Life Certifications.
- Sample Weight QA form.
- Sample Volume QA form.

12.5 Prior to use each day, check and certify each weight balance system (using NIST certified weights). Each technician using the systems certifies balance compliance. Records are stored on all certifications. A Daily Balance Calibration Checks control form should be developed for this activity.

12.6 Routinely check pipettes for volume certification using the weighing of deionized water of known volumes. Records are stored on all certifications. A Weekly Pipette Calibration Checks control form should be developed for this activity.

12.7 Conduct a daily calibration, efficiency, and resolution check (using an NIST source, etc.) on each gamma spectroscopy system. A (sign-off) daily review of certification should be made prior to use by each technician using the system. Stored records are maintained on all QA data. Use the following control forms and concepts:

- Daily QA/QC Calibration, Efficiency, and Resolution Checks.
- Daily QA/QC Performance Charts.
- Weekly QA/QC Background Checks.
- System Maintenance Logs.

12.8 Nuclear reactor flux monitor irradiations will be made and accurate flux monitor corrections maintained for the irradiation locations in each of the wet exposure irradiation ports. Certified records should be maintained for all data and calculations related to these flux correction factors. These documents are:

- NIST Flux Correction Tables.
- Flux Raw Data Documents and Experimental Parameters.

12.9 For each nuclear detector used in the system, determine all geometry (different sample counting configurations) correction factors (curves). The following documents should be maintained:

- Certified Geometry Correction Factors Tables.
- Geometry Raw Data Documents and Experiment Parameters.

12.10 Prepare validation documents for the following:

- SOPs.
- All Computer Programs Used.

12.11 Maintain computer backup disks at a different location for the following:

- Gamma Spectroscopy Data Acquisition and Data Processing Programs.
- System QA/QC Gamma Spectroscopy Data.
- Client Project Gamma Spectra and Nuclear Parameters for Samples, Standards, Duplicates, SRMs and Blanks.

12.12 Thoroughly document all sample irradiation and counting. Establish the following control forms:

- Nuclear Reactor Run Sheet.
- Pneumatic Facility Operation Form.
- Sample Counting and Data Processing Form.

12.13 For QA/QC control, a batch of NAA samples is considered to be a group of samples irradiated at the same time under the same irradiation conditions, counted on the same gamma spectroscopy detectors and data acquisition systems, and processed under the exact same count time, calibration, efficiency, and geometry conditions. Each NAA sample batch should contain the following QC samples as a minimum:

- Blank Vial Analyses - 1 blank vial per 20 unknown samples.
- NBS SRM Analyses - 2 SRMs per 20 unknown samples.
- Duplicate Unknown Analyses - 1 duplicate per 20 unknown samples.
- Standards - Triplicate standards per batch of unknowns.

12.14 Use data review forms to evaluate the performance of these categories for each batch (and monthly summaries) with the following controls:

• Duplicates:	Solids = ±20% variance.
	Liquids = ±10% variance.
• Method blanks:	<3X method blank average.
• SRMs:	Solids ±10% certified value.
	Liquids ±5% certified value.
• Standards:	±1% variance.

12.15 The following system manuals and training documents should be maintained:

- Gamma Spectroscopy System Manuals.
- Computer Program Software Manuals.
- Radiation Safety Study Guide (Health Physics Manual).
- QA/QC Validation Guidelines.
- QA/QC Lab Inspections.
- *Applied Gamma - Ray Spectrometry*, Adams and Dams.
- *Table of the Isotopes*, Lederer, Hollander & Perlman.
- SOP Manual
- Detector Geometry Correction Manual
- Reactor Flux Correction Manual
- Material Safety Data Sheet Manual

13. Procedure

13.1 Unknown Sample Preparation

13.1.1 Pre-punch air filter samples to a 3.0 cm diameter. All sample handling should be performed in laminar flow clean hoods using new disposable plastic gloves, etc.

13.1.2 Carefully fold each air filter disk into itself until it is 1/4 its original size. See Figure 2 for an illustration of the folding process.

13.1.3 Carefully insert the filter into pre-cleaned Kartell or Olympic hi-purity linear polyethylene irradiation vials that are 30 mm long and 8 mm in diameter. Put the sample I.D. number on the vial using marking pens that use ink that contains none of the elements of interest. Heat-seal and pre-clean the vial prior to irradiation. All sample preparation should be controlled by instructions on the unknown QA/QC form. Each of the new Kartell or Olympic hi-purity irradiation polyethylene vials are treated as follows prior to placing samples into them for irradiation:

- 10 min soak in 20% nitric acid-distilled water solution.
- 60 min soak in deionized water.
- Rinse in distilled water.

In each batch of new irradiation vials, a total of 10 of each type vial and trace element levels determined to ensure that contamination of the samples by the vial will not occur.

13.2 Metal Blank Preparation

13.2.1 Prepare method blank filters using the same procedures identified in Section 13.1 for unknowns.

13.2.2 Prepare a minimum of one method blank filter per 20 unknown samples.

13.3 Duplicate Sample Preparation

13.3.1 Prepare duplicate sample filters using the same procedures identified in Section 13.1 for unknown filter being duplicated.

13.3.2 Prepare a minimum of one duplicate filter per 20 unknown samples.

13.4 Standards Preparation

13.4.1 Prepare or purchase mixed element standards, liquid or solid, including the three categories of standards itemized in Table 6.

13.4.2 Using the instructions on the QA/QC Standards preparation form, carefully pipette (using QA/QC certified and checked calibrated pipettes) 0.5 ml of each mixed standard solution into its own unique (pre-cleaned) Kartel or Olympic plastic 30 mm by 8 mm irradiation vial that has been labeled as follows:

SMES	(Short Mixed Element Standard)
MMES	(Medium Mixed Element Standard)
LMES	(Long Mixed Element Standard)

Next trim, heat-seal, and clean vials as per the instructions for the unknowns.

13.4.3 Standards should be prepared in triplicate based on the elements that are being analyzed in the air particulate filters.

13.5 Irradiation and Counting for Short - Lived Isotopes

Unknown samples, standards, blanks, duplicates, and SRMs are irradiated individually for 20 s to 10 min in the pneumatic transfer system of the nuclear reactor at a flux of 1.0×10^{13} n/cm^2 -sec. (or greater). After a monitored decay, each sample vial is rinsed in a radioactive hood and placed in non-irradiated counting vials. After an exact decay time (determined by the results of preliminary sample analyses), each sample, standard, blank, duplicate and SRM is counted for 30 to 300 s on designated Ge(Li) detection systems. Data is analyzed (using the nuclear parameters in Tables 2 and 3) and spectra are permanently stored on disk with appropriate nuclear parameters included. The elements typically analyzed by short-lived isotopes are Al, V, Ti, Mn, Mg, Cl, Cu, F, O, Na, K, I, etc.

13.6 Irradiations and Counting for Medium and Long - Lived Isotopes

Unknown samples, standards, blanks, duplicates, and SRMs are again irradiated for 1 to 24 h at a flux of 1.0×10^{13} n/cm^2-s. (or greater) in the rotating wet vertical exposure irradiation facilities of the nuclear reactor. After approximately a 5-7 day radioactive decay (to allow interfering activities to decay away) of the samples and reference standards, both unknowns, SRMs, and standards are counted for 400-1,200 s on the gamma detection systems. Data is analyzed (using the nuclear reactor parameters in Tables 4 and 5) and spectra is permanently stored on disk with appropriate decay time, dead time, etc. and other nuclear data included. The elements typically analyzed by medium-lived isotopes are Na, K, As, Sm, Cd, La, Mo, Br, Sb, U, Hg, Au, W, Pt, etc. After a 14-21 day decay, a 1,000-1,800 s gamma count of each sample and standard is made for long-lived isotopes. The elements typically analyzed by long-lived isotopes are Ce, Ca, Lu, Th, Cr, Eu ,Yb, Nd, Zr, Ag, Cs, Fe, Sc, Zn, Co, Sr, Rb, Ni, Ba, etc. (using nuclear parameters shown in Tables 4 and 5).

14. Calculations and Data Processing

Spectral data from the unknown samples, standards, and SRMs are processed using the commercially developed computer programs for gamma peak search, least squares fitting, and NAA quantitative analysis. All spectra and associated nuclear parameters from the analyses are stored on disk for future

access as needed. Results are reported as μgrams or nanograms element per cubic meter of air with percent error limits (2 sigma) based on known errors associated with counting statistics, precision, accuracy of standards, weighing, pipetting, etc. As part of the computer processing during the counting phase, an automatic peak search performs a gaussian peak fit on all single peaks. Multiples (several peaks close together) are analyzed by an iterative least squares gaussian fit. The result from this peak program is the determination of the centroid channel (energy), FWHM (full width-half max), net integrated peak area, and background. When no peak area appears, the system calculates a less-than value (based on all available nuclear parameters) for the elemental determination. The number of counts per sec per cubic meter of air, etc. of sample (N_a) is computed as:

$$N_a = \frac{N}{(V_{std})(t_c)(D)(F)(G)}$$

where:

N = the number of counts observed (net peak area).
V_{std} = the standard cubic meters of air sampled (m^3)
F = the sample reactor flux position correction.
G = the sample geometry correction.
t_c = the live counting time in seconds established for each count.
D = a dimensionless decay correction related to the end of the sample irradiation and is computed by:

$$D = \exp. \left[\frac{(0.693t)}{(T_{1/2})} \right]$$

where:

t = the elapsed time from end of irradiation to the middle of the counting sequence in the same units as T.
T = the half-life of the element being evaluated.

The number of μg, etc. of element per cubic meter of air is then calculated by dividing (N_a) by (N_s), which is the analogous term to (N_a) but obtained for a standard. The output results for each element are represented in units of $\mu g/m^3$. A sample data output report is provided as Figure 3.

15. Precision and Accuracy

Precision is measured as the percent difference between the values obtained for duplicates (i.e., N_{a1} and N_{a2}). The average of the values is used to base the percentage difference. The measurement of precision provides us with the best indication of quality control's success. This determination is shown in the sum

of errors associated with weighing, pipetting, individual reactor irradiations, counting statistics, detector efficiency and resolution, and sample homogeneity.

$$\% D = \left[\frac{(N_{a2} - N_{a1})}{\frac{(N_{a1} + N_{a2})}{2}} \right] \times 100$$

15.1 Precision errors associated with typical reactor flux changes in pool type research reactors are illustrated in Table 7.

15.2 Typical precision errors associated with detector efficiency changes with time are illustrated in Table 8.

15.3 Typical precision errors associated with all variables involved in the preparation of samples are illustrated in Table 9.

15.4 Accuracy

Accuracy is measured by percent error for standards and the results for analysis of various Standard Reference Materials from NIST, Canada, IAEA, and other related agencies. Percent error is expressed as the following equation:

$$\% \text{ Error} = \left[\frac{(\text{Observed} - \text{Known})}{(\text{Known})} \right] \times 100$$

15.4.1 Tables 10 through 13 represent a typical accuracy check in various matrix Standard Reference Materials that are routinely irradiated and analyzed with unknowns.

15.4.2 For accurate QA control, a wide variety of SRMs should be maintained in the laboratory similar to the typical ones listed in Table 14.

16. References

1. Crouthamel, C.E., et al., Applied Gamma Ray Spectrometry, Pergamon Press, 1975.

2. Lederer, C.M., et al., Table of the Isotopes, 6th Edition, John Wiley and Sons, 1967.

3. U. S. Environmental Protection Agency, *Test Method for Evaluating Solid Waste*, Method 9022, EPA Laboratory Manual, Vol. #1 - A, SW-846.

4. Shapiro, J., Radiation Protection, Harvard University Press, 1972.

5. Faw, R., and Shultis, J. Radiological Assessment, Prentice - Hall, 1993.

6. Heydorn, K., Neutron Activation Analysis for Clinical Trace Element Research, CRC Press, Vol. 1, 1984.

7. Burn, R., Research, Training, Test and Production Reactor Directory, American Nuclear Society, Third Edition, 1988.

TABLE 1. SUMMARY OF ELEMENTS COMPATIBLE WITH NAA

ELEMENT	SYMBOL	Chemical Abstract Services Registry Numbers (CASRN)
TITANIUM	Ti	7440 - 32 - 6
TIN	Sn	7440 - 31 - 5
IODINE	I	7553 - 56 - 2
MANGANESE	Mn	7439 - 96 - 5
MAGNESIUM	Mg	7439 - 95 - 4
COPPER	Cu	7440 - 50 - 8
VANADIUM	V	7440 - 62 - 2
CHLORINE	Cl	7782 - 50 - 5
ALUMINUM	Al	7429 - 90 - 5
MERCURY	Hg	7439 - 97 - 6
SAMARIUM	Sm	7440 - 19 - 9
TUNGSTEN	W	7440 - 33 - 7
MOLYBDENUM	Mo	7439 - 98 - 7
URANIUM	U	7440 - 61 - 1
LANTHANUM	La	7439 - 91 - 0
CADMIUM	Cd	7440 - 43 - 9
ARSENIC	As	7440 - 38 - 2
ANTIMONY	Sb	7440 - 36 - 0
BROMINE	Br	7726 - 95 - 6
SODIUM	Na	7440 - 23 - 5
POTASSIUM	K	7440 - 09 - 7
CERIUM	Ce	7440 - 45 - 1
CALCIUM	Ca	7440 - 70 - 2
LUTETIUM	Lu	7439 - 94 - 3
SELENIUM	Se	7782 - 49 - 2
TERBIUM	Tb	7440 - 27 - 9
THORIUM	Th	7440 - 29 - 1
CHROMIUM	Cr	7440 - 47 - 3
EUROPIUM	Eu	7440 - 53 - 1
YTTERBIUM	Yb	7440 - 64 - 4
HAFNIUM	Hf	7440 - 58 - 6
BARIUM	Ba	7440 - 39 - 3
STRONTIUM	Sr	7440 - 24 - 6
NEODYMIUM	Nd	7440 - 00 - 8
SILVER	Ag	7440 - 22 - 4
ZIRCONIUM	Zr	7440 - 67 - 7
CESIUM	Cs	7440 - 46 - 2
NICKEL	Ni	7440 - 02 - 0
SCANDIUM	Sc	7440 - 20 - 2
RUBIDIUM	Rb	7440 - 17 - 7
IRON	Fe	7439 - 89 - 6
ZINC	Zn	7440 - 66 - 6
COBALT	Co	7440 - 48 - 4
TANTALUM	Ta	7440 - 25 - 7

TABLE 2. ESTIMATED ACTIVATION ANALYSIS METHOD DETECTION LIMITS IN NANOGRAMS[1]

ELEMENT	DETECTION LIMITS
ALUMINUM	1
ANTIMONY	0.09
ARGON	0.01
ARSENIC	0.02
BARIUM	0.5
BROMINE	0.01
CADMIUM	0.9
CALCIUM	50
CERIUM	2
CESIUM	0.04
CHLORINE	2
CHROMIUM	20.0
COBALT	0.09
COPPER	0.20
DYSPROSIUM	0.000004
ERBIUM	0.04
EUROPIUM	0.00009
FLUORINE	20.0
GADOLINIUM	2.00
GOLD	0.02
HAFNIUM	0.70
HOLMIUM	0.004

ELEMENT	DETECTION LIMITS
INDIUM	0.005
IODINE	1
IRIDIUM	0.002
IRON	1000
KRYPTON	0.1
LANTHANUM	0.04
LUTETIUM	0.0009
MAGNESIUM	50
MANGANESE	0.005
MERCURY	0.2
MOLYBDENUM	1
NEODYMIUM	2
NICKEL	0.4
NIOBIUM	10
PALLADIUM	0.02
PLATINUM	0.4
POTASSIUM	0.2
PRASEODYMIUM	0.01
RHENIUM	0.004
RHODIUM	0.002
RUBIDIUM	4.00
RUTHENIUM	0.200

ELEMENT	DETECTION LIMITS
SAMARIUM	0.009
SCANDIUM	0.200
SELENIUM	2.00
SILVER	0.01
SODIUM	0.04
STRONTIUM	0.09
TANTALUM	0.90
TELLURIUM	1.00
TERBIUM	0.500
THORIUM	0.700
TIN	2.00
TITANIUM	1.00
TUNGSTEN	0.02
URANIUM	0.04
VANADIUM	0.01
YTTERBIUM	0.04
YTTRIUM	0.02
ZINC	2
ZIRCONIUM	20.0

[1]Results listed are based on a 10 h irradiation at 1 x 10^{13} n/cm-s with no interfering elements or matrix effects.

TABLE 3. GAMMA RAY INTERFERENCES

Element	Isotope	Half-Life	Energy (keV)	Interfering Isotope	Half-Life	Interference (keV)	Reference (keV)	Abundance Ratio
Dysprosium	^{165}Dy	2.33 h	94.7	^{233}Th	22.3 m	94.7	86.5	0.346
Magnesium	^{27}Mg	9.46 m	843.8	^{56}Mn	2.58 h	846.8	1810.7	3.636
Manganese	^{56}Mn	2.58 h	846.8	^{27}Mg	9.46 m	843.8	1014.4	2.496
Antimony	^{122}Sb	2.70 d	564.2	^{76}As ^{134}Cs	26.32 h 2.06 y	563.2 563.2	559.1 795.8	0.0267 0.0981
Arsenic	^{76}As	26.32 h	559.1	^{114m}In	49.51 d	558.4	190.3	0.0649
Bromine	^{82}Br ^{82}Br	35.3 h 35.3 h	619.1 776.5	^{187}W ^{99}Mo	23.9 h 65.94 h	618.3 778.0	685.7 739.6	0.2300 0.3578
Calcium	^{47}Ca	4.54 d	1297.1	^{152}Eu	13.33 y	1299.1	1408.1	0.0784
Gallium	^{72}Ga	14.1 h	834.1	^{54}Mn	312.12 d	834.8	-------	-------
Germanium	^{77}Ge	11.3 h	264.4	^{75}Se	119.77 d	264.7	400.7	5.121
Gold	^{198}Au	2.70 d	411.8	^{152}Eu	13.33 y	411.1	344.3	0.0839
Holmium	^{166}Ho	26.8 h	80.6	^{131}I	8.04 d	80.2	364.5	0.0323
Tungsten	^{187}W ^{187}W	23.9 h 23.9 h	134.2 685.7	^{131}Ba ^{181}Hf ^{110m}Ag	11.8 d 42.39 d 249.76 d	133.6 133.0 687.0	216.0 345.9 657.8	0.1095 2.3800 0.0681
Uranium	^{239}Np ^{239}Np	2.36 d 36 d	228.2 277.6	^{132}Te ^{182}Ta ^{232}Th ^{147}Nb ^{152}Eu	78.2 h 114.5 d 1.4E+10y 10.98 d 13.33 y	228.3 229.3 277.4 275.4 275.4	49.8 222.1 583.2 531.0 344.3	6.1250 0.4790 0.0747 0.0611 0.0013
Ytterbium	^{175}Yb	4.19 d	282.5	^{177m}Lu	160.9 d	281.8	208.4	0.2315
Antimony	^{124}Sb	60.2 d	602.7	^{134}Cs	2.06 y	604.7	795.8	1.1418
Barium	^{131}Ba ^{131}Ba	11.8 d 11.8 d	216.0 496.3	^{160}Tb ^{103}Ru	72.3 d 39.26 d	215.6 497.1	298.6 610.3	0.1526 15.8640

TABLE 3. (continued)

Element	Isotope	Half-Life	Energy (keV)	Interfering Isotope	Half-Life	Interference (keV)	Reference (keV)	Abundance Ratio
Cerium	^{141}Ce	32.5 d	145.4	^{183}Ta ^{175}Yb	5.10 d 4.19 d	144.1 144.9	246.1 396.3	0.0954 0.0511
Cesium	^{134}Cs ^{134}Cs	2.06 y 2.06 y	604.7 795.8	^{124}Sb ^{232}Th	60.2 d 1.4E+10y	602.7 795.0	1691.0 911.2	2.0660 0.1632
Chromium	^{51}Cr	27.7 d	32.1	^{147}Nb ^{177m}Lu	10.98 d 160.9 d	319.4 319.0	531.0 378.5	0.1488 0.3971
Hafnium	^{181}Hf	42.39 d	133.0	^{131}Ba ^{114}Ce	11.8 d 284.9 d	133.6 133.5	216.0 -------	0.1095 -------
	^{181}Hf	42.39 d	482.2	^{194m}Ir	171.0 d	482.7	338.8	1.7586
Indium	^{114m}In	49.51 d	190.3	^{59}Fe	44.5 d	192.4	1099.2	0.0545
Iridium	^{192}Ir	73.83 d	296.0	^{177m}Lu ^{238}U	160.9 d 4.5E+09y	296.4 295.2	378.5 351.9	0.1949 0.5175
	^{192}Ir	73.83 d	468.1	^{154}Eu	8.59 y	468.1	478.3	0.2627
Iron	^{59}Fe	44.5 d	1291.6	^{115m}Cd ^{182}Ta	44.6 d 114.5 d	1290.6 1289.2	933.8 1221.4	0.4450 0.0461
Mercury	^{203}Hg	46.61 d	279.2	^{75}Se	119.77d	279.5	264.7	0.4257
Nickel	^{58}Co	70.82 d	810.8	^{152}Eu	13.33 y	810.8	778.9	0.0244
Osium	^{185}Os	93.6 d	646.1	^{124}Sb	60.2 d	645.9	602.7	0.0755
Ruthenium	^{103}Ru	32.26 d	497.1	^{131}Ba	11.8 y	496.3	373.2	3.308
Scandium	^{46}Sc	83.81 d	1120.6	^{182}Ta ^{238}U	114.5 d 4.5E+09y	1121.3 1120.3	1221.4 609.3	1.2915 0.3254
Selenium	^{75}Se	119.77 d	264.7	^{182}Ta	114.5 d	264.1	222.1	0.4789
Silver	^{110m}Ag ^{110m}Ag	249.76 d 249.76 d	657.8 884.7	^{152}Eu ^{192}Ir	13.33 y 73.83 d	656.5 884.5	778.9 316.5	0.0110 0.0034

TABLE 3. (continued)

Element	Isotope	Half-Life	Energy (keV)	Interfering Isotope	Half-Life	Interference (keV)	Reference (keV)	Abundance Ratio
Thorium	^{233}Pa	27.0 d	300.2	^{160}Tb ^{232}Th	72.3 d 1.4E+10y	298.6 300.1	879.4 238.6	0.8781 0.0623
	^{233}Pa	27.0 d	312.0	^{42}K	12.36 h	312.4	1524.7	0.0186
Thulium	^{170}Tm	128.6 d	84.3	^{182}Ta	14.5 d	84.7	100.1	0.1943
Tin	^{113}Sn	115.09 d	391.7	^{160}Tb	72.3 d	392.5	298.6	0.0496
Ytterbium	^{169}Yb	32.02 d	177.2	^{177m}Lu	160.9 d	177.0	378.5	0.1235
	^{169}Yb	32.02 d	198.0	^{160}Tb ^{182}Ta	72.3 d 114.5 d	197.0 198.4	298.6 222.1	0.1940 0.1987
Zinc	^{65}Zn	243.9 d	1115.6	^{46}Sc ^{152}Eu ^{160}Tb ^{182}Ta	83.81 d 13.33 y 72.3 d 114.5 d	1120.6 1112.1 1115.1 1113.4	889.3 1408.0 1178.0 1221.4	1.0000 0.6475 0.1000 0.0160
Zirconium	^{95}Zr	64.02 d	724.2	^{124}Sb ^{154}Eu	60.2 d 8.59 y	722.8 723.3	602.7 1274.8	0.1115 0.5549
	^{95}Zr	64.02 d	756.7	^{154}Eu	8.59 y	756.9	1274.8	0.1115
	^{95}Nb	34.97 y	765.8	^{152}Eu ^{160}Tb	13.33 y 72.3 d	764.9 765.3	778.9 879.4	0.0139 0.0670

TABLE 4. NUCLEAR PARAMETERS FOR NEUTRON ACTIVATION ANALYSIS

			Neutron activation cross section (barn)					Most useful γ-ray	
Element	Stable isotope	Abundance (%)	Thermal (σ)	Epithermal (1)	1 / σ	Radionuclide formed	Half-Life	Energy (keV)	Abundance (%)
F	^{19}F	100	0.0098	0.04	4.1	^{20}F	11.4 s	1634	100
Na	^{23}Na	100	0.528	0.31	0.59	^{24}Na	15.0 hr	1368	100
Mg	^{26}Mg	11.2	0.0038	0.03	7.9	^{27}Mg	9.5 min	844	70
Al	^{27}Al	100	0.232	0.17	0.73	^{28}Al	2.3 min	1779	100
S	^{36}S	0.015	0.15	--	--	^{37}S	5.1 min	3105	90
Cl	^{37}Cl	24.5	0.43	0.17	0.41	^{38}Cl	37.3 min	2168	100
K	^{41}K	6.8	1.48	1.28	0.86	^{42}K	12.4 hr	1525	18
Ca	^{46}Ca	0.0033	0.7	0.32	0.46	^{47}Ca	4.6 d	1297	74
--	--	--	--	--	--	^{47}Sc	3.4 d	160	73
--	^{48}Ca	0.185	1.1	0.90	0.82	^{49}Ca	8.8 min	3084	89
Sc	^{45}Sc	100	10	--	--	^{46m}Sc	20 s	143	46
--	--	--	25	11	0.44	^{46}Sc	84 d	889	100
Ti	^{50}Ti	5.3	0.179	~ 5	~30	^{51}Ti	5.8 min	320	95
V	^{51}V	100	4.90	2.7	0.55	^{52}V	3.75 min	1434	100
Cr	^{50}Cr	4.3	16.0	8.5	0.53	^{51}Cr	27.8 d	320	9
Mn	^{55}Mn	100	13.3	14	1.1	^{56}Mn	2.58 hr	847	99
Fe	^{38}Fe	0.31	1.14	1.2	1.1	^{59}Fe	45 d	1099	56
Co	^{59}Co	100	19.9	--	--	^{60m}Co	10.4 min	59	2.1
--	--	--	37.5	75	2	^{60}Co	5.2 yr	1333	100
Ni	^{58}Ni	67.8	--	--	--	^{65}Ni	71 d.	811	99
--	^{64}Ni	1.16	1.50	0.9	0.6	^{65}Ni	2.55 hr	1482	25
Cu	^{63}Cu	69.1	4.4	5	1.1	^{64}Cu	12.8 hr	511	38
--	^{65}Cu	30.9	2.20	2.5	1.1	^{66}Cu	5.2 min	1039	9
Zn	^{64}Zn	48.9	0.82	1.6	2.0	^{65}Zn	247 d	1116	49

TABLE 4. (continued)

			Neutron activation cross section (barn)					Most useful γ-ray	
Element	Stable isotope	Abundance (%)	Thermal (σ)	Epithermal (I)	I / σ	Radionuclide formed	Half-Life	Energy (keV)	Abundance (%)
--	^{68}Zn	18.6	0.07	0.24	3.4	^{69m}Zn	13.9 hr	439	95
Ga	^{71}Ga	39.5	4.7	25	0.53	^{72}Ga	14.1 hr	834	96
Ge	^{70}Ge	20.6	3.5	--	--	^{71}Ge	11.4 d	Ga x ray	--
--	^{74}Ge	36.7	0.52	0.9	1.7	^{75}Ge	83 min	265	11
As	^{75}As	100	4.4	63	14	^{76}As	26.4 hr	559	43
Se	^{74}Se	0.9	55	500	9.1	^{75}Se	120 d	265	60
--	^{79}Se	9	21	42	2.0	^{77m}Se	17.4 s	162	50
Br	^{79}Br	50.5	2.6	--	--	^{80m}Br	4.4 hr	37	36
--	--	--	11.0	125	11	^{80}Br	17 min	616	7
--	^{81}Br	49.5	3.0	50	17	^{82}Br	35.3 hr	777	83
Rb	^{85}Rb	72.1	0.45	7	16	^{86}Rb	18.7 d	1079	8.8
--	^{87}Rb	27.9	0.12	2.3	19	^{88}Rb	17.7 min	1836	21
Sr	^{94}Sr	0.55	0.7	7.5	11	^{85}Sr	65 d	514	100
--	^{86}Sr	9.9	0.8	4	5	^{87m}Sr	2.8 hr	389	80
Y	^{88}Y	100	0.0010	0.89	890	^{90m}Y	3.1 hr	202	97
Zr	^{94}Zr	17.4	0.0075	0.38	51	^{95}Zr	65 d	757	49
--	--	--	--	--	--	^{95}Nb	35 d	766	100
--	^{96}Zr	2.8	0.05	5.0	100	^{97}Zr	17.0 hr	743	99
--	--	--	--	--	--	^{97}Nb	72 min	658	98
Nb	^{93}Nb	100	0.15	8.0	53	^{94m}Nb	6.3 min	Nb x rays	--
Mo	^{98}Mo	23.8	0.14	7.5	54	^{99}Mo	67 hr	740	12
--	--	--	--	--	--	^{99m}Tc	6.0 hr	140	90
--	^{100}Mo	9.6	0.2	3.9	20	^{101}Mo	14.6 min	2089	16

TABLE 4. (continued)

			Neutron activation cross section (barn)					Most useful γ-ray	
Element	Stable isotope	Abundance (%)	Thermal (σ)	Epithermal (I)	1 / σ	Radionuclide formed	Half-Life	Energy (keV)	Abundance (%)
–	–	–	–	–	–	^{101}Tc	14.0 min	307	91
Ru	^{96}Ru	5.5	0.21	5.5	26	^{97}Ru	2.8 d	215	91
–	^{102}Ru	31.6	1.3	4.2	3.2	^{103}Ru	39.5 d	497	88
–	^{104}Ru	18.8	0.47	5.2	11	^{105}Ru	4.4 hr	724	48
–	–	–	–	–	–	^{105}Rh	35.9 hr	319	19
Rh	^{103}Rh	100	139	1100	7.9	^{104m}Rh	4.4 min	51	47
Pd	^{108}Pd	26.8	12	186	16	^{109}Pd	13.5 hr	88	5
Ag	^{109}Ag	48.6	4.7	55	12	^{110m}Ag	255 d	658	96
Cd	^{114}Cd	28.9	0.3	20	67	^{115}Cd	53.5 hr	528	26
–	–	–	–	–	–	^{115m}In	4.5 hr	336	50
In	^{113}In	4.3	7.8	~180	~20	^{114m}In	50 d	190	17
–	^{113}In	95.7	161	2600	16	^{116m}In	54 min	1293	80
Sn	^{112}Sn	0.95	0.71	27	38	^{113}Sn	117 d	In x rays	–
–	–	–	–	–	–	^{113m}In	100 min	391	64
–	^{118}Sn	14.2	0.006	0.49	82	^{117m}Sn	14.0 d	158	87
–	^{122}Sn	4.7	0.15	0.83	5.5	^{123m}Sn	40 min	160	84
–	^{134}Sn	6	0.14	9	64	^{125m}Sn	9.6 min	332	97
Sb	^{121}Sb	57.3	6.2	180	29	^{122}Sb	2.8 d	564	66
–	^{123}Sb	42.7	4	120	30	^{124}Sb	60 d	1691	50
Te	^{130}Te	34.5	0.2	0.4	2	^{131}Te	25 min	150	68
–	–	–	–	–	–	^{131}I	8.0 d	365	82
I	^{127}I	100	6.2	150	24	^{128}I	25.0 min	443	14
Cs	^{133}Cs	100	2.6	30	12	^{134m}Cs	2.90 hr	127	14

TABLE 4. (continued)

			Neutron activation cross section (barn)					Most useful γ-ray	
Element	Stable isotope	Abundance (%)	Thermal (σ)	Epithermal (I)	I / σ	Radionuclide formed	Half-Life	Energy (keV)	Abundance (%)
--	--	--	30	465	16	^{134}Cs	5.05 yr	797	99
Ba	^{130}Ba	0.12	11	270	25	^{131}Ba	12.0 d	496	48
--	^{134}Ba	2.6	0.16	24	150	^{135m}Ba	28.7 hr	268	16
--	^{138}Ba	70.4	0.35	0.3	0.9	^{139}Ba	83 min	166	23
La	^{139}La	100	9	11	1.2	^{140}La	40.2 hr	1597	96
Ce	^{140}Ce	88.5	0.58	0.49	0.8	^{141}Ce	33 d	146	48
--	^{142}Ce	11.1	1.1	1.4	1.3	^{143}Ce	33 hr	293	46
Nd	^{146}Nd	17.2	1.4	2.8	2	^{147}Nd	11.0 d	91	28
--	^{148}Nd	5.7	2.5	17	6.8	^{149}Nd	1.9 hr	211	27
--	^{150}Nd	5.6	1.3	14	11	^{151}Nd	12 min	116	40
--	--	--	--	--	--	^{151}Pm	28 hr	340	21
Sm	^{152}Sm	26.7	210	2900	14	^{153}Sm	47 hr	103	28
--	^{154}Sm	22.6	5.5	27	4.9	^{155}Sm	22 min	104	73
Eu	^{151}Eu	47.8	2800	11400	4.1	^{152m}Eu	9.3 hr	963	12
--	--	--	5300	3800	0.7	^{152}Eu	12.5 yr	1408	22
--	^{153}Eu	52.2	400	1500	3.8	^{154}Eu	16 yr	1274	37
Gd	^{152}Gd	0.21	1100	3000	2.7	^{153}Gd	242 d	98	55
--	^{158}Gd	24.8	3.5	80	23	^{159}Gd	18 hr	363	9
Tb	^{159}Tb	100	25	400	16	^{160}Tb	72 d	299	30
Dy	^{164}Dy	28.1	2100	--	--	^{165m}Dy	1.26 min	Dy x rays	--
--	--	--	2600	800	0.3	^{165}Dy	2.32 hr	95	4
Ho	^{165}Ho	100	62	660	11	^{164}Ho	27.0 hr	81	5.4
Er	^{170}Er	14.9	6	35	6	^{171}Er	7.5 hr	308	63

TABLE 4. (continued)

			Neutron activation cross section (barn)					Most useful γ-ray	
Element	Stable isotope	Abundance (%)	Thermal (σ)	Epithermal (I)	I / σ	Radionuclide formed	Half-Life	Energy (keV)	Abundance (%)
Tm	^{189}Tm	100	106	1700	16	^{170}Tm	130 d	84	3.3
Yb	^{168}Yb	0.14	3200	25000	7.8	^{189}Yb	31 d	198	35
--	^{174}Yb	31.7	65	31	0.48	^{175}Yb	4.2 d	396	6.0
--	^{176}Yb	12.6	5.5	7	1.3	^{177}Yb	1.9 hr	150	16
Lu	^{175}Lu	37.4	18	600	33	^{176m}Lu	3.7 hr	88	10
--	^{176}Lu	2.6	2050	~1100	~0.5	^{177}Lu	6.7 d	208	6.1
Hf	^{179}Hf	27.2	52	--	--	^{179m}Hf	18.6 s	214	94
--	^{180}Hf	35.2	12.6	28	2.2	^{181}Hf	43 d	482	81
Ta	^{181}Ta	100	22	700	32	^{182}Ta	115 d	1222	34
W	^{186}W	28.4	37	420	11	^{187}W	24.0 hr	686	27
Re	^{185}Re	37.1	110	1700	15	^{186}Re	3.7 d	137	9
--	^{187}Re	62.9	75	310	4.1	^{188}Re	16.8 hr	155	10
Os	^{190}Os	26.4	16	39	2.4	^{191}Os	15 d	129	25
Ir	^{191}Ir	3.85	925	4000	4.3	^{192}Ir	74 d	468	49
--	^{193}Ir	61.5	110	1390	13	^{194}Ir	17.4 hr	328	10
Pt	^{196}Pt	25.2	0.8	~6	~8	^{197}Pt	19 hr	77	20
--	^{198}Pt	7.2	3.7	53	14	^{199}Pt	30 min	543	24
--	--	--	--	--	--	^{199}Au	3.15 d	158	37
Au	^{197}Au	100	98.8	1550	16	^{198}Au	2.69 d	412	95
Hg	^{196}Hg	0.15	3000	~1220	~0.4	^{197}Hg	2.70 d	78	18
--	^{202}Hg	29.8	4.9	4.3	0.9	^{203}Hg	47d	279	77
Th	^{232}Th	100	7.4	82	11	^{233}Th	22.3 min	Pa x rays	--

TABLE 4. (continued)

			Neutron activation cross section (barn)					Most useful γ-ray	
Element	Stable isotope	Abundance (%)	Thermal (σ)	Epithermal (I)	I / σ	Radionuclide formed	Half-Life	Energy (keV)	Abundance (%)
U	^{235}U	0.72	580^{d}	275^{d}	0.5	Fission products	Various	Various	--
--	^{238}U	99.3	2.72	280	103	^{239}U	23.5 min	75	51
--	--	--	--	--	--	^{238}Np	2.35 d	278	14

TABLE 5. NUCLEAR PARAMETERS OF LEPD - SENSITIVE ELEMENTS

Element	Isotope	Abundance	Half-life	Nuclear cross section	Low-energy photon energies (keV)
Selenium	^{75}Se	0.87	120.0 days	30.0	10.7, 66.3, 96.7, 121.1, 136.0
Selenium	^{79m}Se	23.52	3.9 min.	0.4	95.9
Mercury	^{197}Hg	0.14	65.0 hr.	905.0	66.98, 68.79, 77. 97
Cadmium	^{115}Cd	28.86	53.0 hr.	1.2	24.2
Cobalt	^{60m}Co	100.00	10.5 min.	37	58.5
Platinum	^{197}Pt	25.30	20.0 hr.	1.0.0	66.8, 75.7, 99.0, 129.7
Palladium	^{109m}Pd	26.71	5.0 min.	12.2	188.9
Barium	^{139}Ba	71.66	82.9 min.	0.4	36.4, 165.8
Tungsten	^{187}W	28.41	24.0 hr.	40.0	69.3, 71.2, 72.3, 134.3
Germanium	^{75}Ge	36.54	82.0 min.	0.5	198.6, 264.6
Cesium	^{134m}Cs	100.00	2.9 hr.	30.6	31.0, 35.0, 127.4
Tin	^{123}Sn	4.72	39.4 min.	0.2	160.2
Antimony	^{122m}Sb	57.25	3.5 min.	6.0	61.6, 76.3
Europium	^{152m}Eu	47.82	9.3 hr.	8730.0	40, 122
Samarium	^{153}Sm	26.72	46.7 hr.	210.0	41, 70, 103
Gadolinium	^{159}Gd	24.87	18.0 hr.	3.4	44
Terbium	^{160}Tb	100.00	73.0 days	46.0	46, 87
Dysprosium	^{165}Dy	28.18	2.3 hr.	700.0	47, 98
Holmium	^{166}Ho	100.00	27.0 hr.	64.0	49, 81
Erbium	^{171}Er	4.88	7.5 hr.	9.0	41, 118
Ytterbium	^{169}Yb	0.14	32.0 days	11,000.0	54, 190
Ytterbium	^{175}Yb	31.84	4.2 days	9.0	54
Lutetium	^{177}Lu	2.59	6.8 days	2100.0	56, 88, 113
Palladium	^{109}Pd	26.70	13.6 hr.	12.2	22, 41, 88, 104

TABLE 6. RADIONUCLIDE STANDARDS

SHORT - LIVED RADIONUCLIDES STANDARDS	
ELEMENT	CONCENTRATION (µgrams)
Titanium	250.0
Iodine	250.0
Manganese	1.00
Magnesium	500.0
Copper	500.0
Sodium	20.0
Vanadium	5.00
Potassium	500.0
Chlorine	500.0
Aluminum	250.0

MEDIUM - LIVED RADIONUCLIDES STANDARDS	
ELEMENT	CONCENTRATION (µgrams)
Mercury	10.0
Samarium	0.50
Tungsten	5.00
Molybdenum	50.0
Uranium	5.00
Lanthanum	5.00
Cadmium	50.0
Gold	1.00
Arsenic	10.0
Antimony	5.00
Bromine	1.00
Sodium	20.0
Potassium	500.0
Platinum	10.0

LONG - LIVED RADIONUCLIDE STANDARDS	
ELEMENT	CONCENTRATION (µgrams)
Cerium	25.0
Calcium	500.0
Lutetium	0.02
Selenium	25.0
Terbium	5.00
Thorium	10.0
Chromium	25.0
Europium	0.010
Ytterbium	1.00
Hafnium	10.0
Barium	500.0
Strontium	200.0
Neodymium	25.0
Silver	0.500
Zirconium	250.0
Cesium	25.0
Nickel	250.0
Scandium	2.50
Rubidium	250.0
Iron	12,500.0
Zinc	100.0
Cobalt	1.00
Tantalum	25.0

TABLE 7. GOLD FLUX MONITOR COMPARISON[1]

Flux Monitor Run	Date	Net Counts at 0.411 MeV Au-198 Gamma Peak
Flux Run 1	January	58,266 ± 0.4%
Flux Run 2	February	58,397 ± 0.4%
Flux Run 3	March	58,402 ± 0.4%
Flux Run 4	April	58,122 ± 0.4%
Flux Run 5	May	58,316 ± 0.4%
Flux Run 6	June	58,105 ± 0.4%
Flux Run 7	July	58,247 ± 0.4%
Flux Run 8	August	58,399 ± 0.4%
Flux Run 9	September	58,518 ± 0.4%
Flux Run 10	October	58,175 ± 0.4%
Flux Run 11	November	58,348 ± 0.4%
Flux Run 12	December	58,433 ± 0.4%
	Average	58,310 ± 208

[1] Information in this table is an indication of the potential flux variation from one reactor irradiation to another throughout the sample year using duplicate reactor parameters. There is a 0.4% error is associated with the counting statistics.

TABLE 8. EXAMPLE OF 38% HPGE DETECTOR EFFICIENCY STABILITY STUDIES[1]

Date	609.3 KeV Gamma Counts
July 27, 1994	26,758 ± 0.6%
July 28, 1994	26,523 ± 0.6%
July 29, 1994	26,840 ± 0.6%
July 30, 1994	26,635 ± 0.6%
July 31, 1994	26,402 ± 0.6%
June 30, 1994	26,677 ± 0.6%
May 16, 1994	26,770 ± 0.6%
April 18, 1994	26,554 ± 0.6%
March 14, 1994	26,726 ± 0.6%
February 7, 1994	26,836 ± 0.6%
January 10, 1994	26,786 ± 0.6%
December 31, 1993	26,554 ± 0.6%
November 27, 1993	26,766 ± 0.6%
October 21, 1993	26,670 ± 0.6%
September 28, 1993	26,749 ± 0.6%
August 23, 1993	26,741 ± 0.6%
AVERAGE	26,687 ± 285

[1] Based on 300 second count of Ra-226 Standard Source in a fixed geometry.

TABLE 9. I, Br, Cl STANDARD COMPARISON[1]

Standard	I	Br	Cl
EPA Standard 1	71326	28314	18220
EPA Standard 2	71538	28630	18357
EPA Standard 3	71105	28127	18201
EPA Standard 17	71250	28230	18488
EPA Standard 18	71612	29450	18245
EPA Standard 19	71427	28421	18119
EPA Standard 37	71582	28819	17860
EPA Standard 38	71851	28844	18092
EPA Standard 39	71841	28560	18031
EPA Standard 41	72124	29006	18545
EPA Standard 42	72831	28861	18344
EPA Standard 43	72199	28796	18566
EPA Standard 71	72828	28860	18339
EPA Standard 72	71868	28723	18316
EPA Standard 73	72017	29495	18221

1
(1) These are integrated gamma ray photopeak net counts for the 442.0 MeV I-128 gamma ray, the 617.0 Mev Br-80 gamma ray, and the 1642.0 Mev Cl-38 gamma ray of typical standards used for short-lived analyses.
(2) Each standard is composed of 200 μgrams Cl (200 lambda), 25 μgrams Br (25 lambda), and 25 μgrams I (25 lambda) for a total volume of 250 lambda (0.25 ml).
(3) Each standard represents a separate 3 minute pneumatic rabbit irradiation at 1 x 10^{13} n/cm^2-sec, 21 minute decay, and 500 sec. count on a 35 percent GeLi Gamma Spectrometry System.
(4) Standards 1 through 3 were prepared as fresh stock solutions.
(5) Standards 17 through 19 were prepared as fresh stock solutions.
(6) Standards 37 through 39 were prepared as fresh stock solutions.
(7) Standards 41 through 43 and 71 through 73 were prepared as fresh stock solutions.
(8) This table provides information on the sum of errors associated with (a) weighing, (b) pipetting, (c) individual reactor irradiations, (d) counting statistics, and (e) detector efficiency and resolution stability over a period of 1 year.

TABLE 10. NAA OF TRACE ELEMENTS IN NIST 1632[1]
(μgrams/gram)

Element	NAA Value	NIST Certified Value
Titanium	944.17	(960)
Tin	15.0	(10.1)
Iodine	2.713	(2.88)
Manganese	38.957	(40)
Magnesium	1625.16	(1600)
Copper	<20.0	(18)
Silicon	31,857.35	(33,800)
Vanadium	34.771	(35)
Chlorine	947.63	(962)
Aluminum	18,100.96	(17,800)
Mercury	0.141	(0.12)
Samarium	1.637	(1.66)
Tungsten	<3.0	-----
Molybdenum	3.867	(3.82)
Uranium	1.414	(1.4)
Lanthanum	10.389	(10.5)
Cadmium	<0.25	-----
Gold	<0.00001	-----
Arsenic	5.894	(5.9)
Antimony	3.629	(3.6)
Bromine	17.787	(17.7)

Element	NAA Value	NIST Certified Value
Sodium	387.95	(380)
Potassium	2854.84	(2900)
Cerium	20.06	(19.6)
Calcium	4225.14	(4100)
Lutetium	0.13	(0.13)
Europium	0.343	(0 .34)
Selenium	2.947	(2.9)
Thorium	3.1	(3.1)
Chromium	20.287	(20.2)
Ytterbium	0.788	(0.78)
Neodymium	3.0	-----
Barium	351.28	(342)
Cesium	1.52	(1.52)
Silver	<0.09	(0.056)
Nickel	<20.0	(15)
Scandium	3.881	(3.86)
Rubidium	21.441	(21.1)
Iron	8741.63	(8700)
Zinc	34.256	(37)
Cobalt	5.832	(5.78)

[1] The value in brackets in the certified or best known value for this element in this Standard Reference Material.

TABLE 11. NAA OF SE IN NIST SRM 1643 - A WATER
(nanograms Se/ml water)

Report No.	NIST Certified Value	NAA Measured Value
333260	11.0 ± 1.0	11.092
333227	11.0 ± 1.0	10.907
333227	11.0 ± 1.0	11.116
333233	11.0 ± 1.0	11.202
333233	11.0 ± 1.0	10.591
333233	11.0 ± 1.0	11.000
333233	11.0 ± 1.0	10.967
333226	11.0 ± 1.0	11.186
333226	11.0 ± 1.0	11.311
315670	11.0 ± 1.0	10.550
315670	11.0 ± 1.0	11.223
315612	11.0 ± 1.0	10.864
315612	11.0 ± 1.0	11.142

TABLE 12. QA NAA ANALYSES OF NIST SRM 1566 OYSTER
(μgrams element/gram SRM)

Report #	Cd	As	Zn	Selenium	Copper
NIST Certified Values	3.5 ± 0.4	13.4 ± 1.9	852.0 ± 14.0	2.1 ± 0.5	63.0 ± 3.5
333266	3.351	13.618	842.51	2.278	64.729
333266	3.301	13.512	846.25	2.194	63.686
333296	3.477	13.342	8842.47	2.041	61.149
348760	3.613	13.371	843.43	2.044	63.617
348766	3.485	14.324	842.26	2.149	62.103
348766	3.528	13.665	857.52	2.083	63.152
348778	3.413	12.188	854.76	2.137	66.901
348114	3.496	12.745	842.92	1.960	64.119
348115	3.67	12.978	863.47	2.331	63.253
348115	3.31	14.185	846.12	2.099	61.317
348112	3.232	12.439	863.92	2.077	61.749
315668	3.867	13.729	855.3	2.004	60.355
315668	3.693	13.023	856.11	2.081	63.301
315668	3.29	13.026	848.85	2.217	61.972
315668	3.877	13.193	849.47	2.103	63.580
315668	3.421	13.178	867.33	2.072	61.753
315668	3.422	13.288	845.83	2.085	60.981
315648	3.565	13.006	847.01	2.095	64.620
315685	3.383	13.317	860.01	2.234	61.347
315695	3.796	13.407	860.85	2.064	65.079
315685	3.226	13.357	844.43	2.111	62.318

TABLE 13. QA NAA ANALYSES OF NIST SRM RM-50 TUNA
(μgrams element/gram SRM)

Report No.	Mercury	Arsenic	Selenium	Zinc
NIST Certified Values	0.95 ± 0.1	3.3 ± 0.4	3.6 ± 0.4	13.6 ± 1.0
333215	1.003	3.407	3.646	12.752
331215	0.086	3.494	3.852	13.876
333266	0.919	3.278	3.537	13.417
333266	0.903	3.269	3.662	13.876
333296	0.996	3.509	3.578	13.553
333296	0.988	3.164	3.794	14.172
348766	1.005	3.365	3.864	14.021
348766	0.946	3.278	3.828	14.487
348766	0.89	3.497	3.461	14.134
348766	1.019	3.299	3.669	13.731
348766	0.957	3.256	3.627	12.821
348766	0.983	3.56	3.554	12.878
348766	1.002	3.482	3.49	13.925
348778	0.923	3.412	3.483	14.552
348115	0.982	3.544	3.994	14.238
315685	0.933	3.699	3.726	14.008
315685	----	3.346	3.514	13.872
348760	0.995	3.348	3.519	14.347
348760	0.942	3.256	3.731	13.901
348760	1.134	3.278	3.695	13.335
348760	0.974	3.544	3.9	12.843
348760	0.956	3.525	3.59	12.725

TABLE 14. CERTIFIED STANDARD REFERENCE MATERIALS

NIST	
1645	River Sediment
4335	Peruvian Soil
1648	Urban Particulate Matter
1649	Urban Particulate Matter
1630	Coal
1632	Coal
4353	Rocky Flats Soil
1632-A	Coal
1632-B	Coal
160-B	Steel
1635	Coal
1621	Fuel Oil
1566	Oyster Tissue
1566-A	Oyster Tissue
RM-50	Tuna
1577	Bovine Liver
1577-A	Bovine Liver
1577-B	Bovine Liver
1575	Pine Needles
1570	Spinach
1549	Milk
1573	Tomato Leaves
RM 8505	Oil
1571	Orchard Leaves
1084	Oil
1633	Flyash
1572	Citrus Leaves
1643-A	Water
1643-B	Water
1643-C	Water
1646	Estuarine Sediment
1568	Rice Flour
1567	Wheat Flour
688	Basalt Flour
278	Obsidian
2672	Urine
2671	Urine
697	Bauxite
610-V-611	Glass
45-B	River Sediment
950-A	Uranium
U-100	Uranium
U-030	Uranium

NIST (continued)	
FDA	Animal Feed
101-F	Steel
121-D	Steel
360-A	Zircalloy
2704	Buffalo River Sediment

IAEA	
V-2-1	Wheat Flour
Soil 5	Soil
SP-M-1	Seaplant
MA-M-1	Oyster Tissue
MA-6	Fish
H-4	Muscle
MA-A-1	Copepod
MA-A-2	Fish
A-11	Milk Powder
V-4	Potatoes
V-8	Rye Flour
V-10	Hay
MA-B-1	Clam
A-2	Blood
SL-1	Lake Sediments
A-3-1	Animal Bone
S-7	Uranium Ore
F-1	Feldspar
S-8	Uranium Ore
Air-3/1	Air Filters
V-9	Cotton Cellulose
SD-B-2	Oyster
H-9	Diet
MA-A-3	Shrimp
H-8	Kidney
MA-B-3-1	Fish

TABLE 14. (continued)

CANADA	
GRS-1	Gold Tailings
UTS-2	Uranium Tailings
UTS-4	Uranium Tailings
FER-4	Iron Formation Rock
FER-1	Iron Formation Rock
FER-2	Iron Formation Rock
FER-3	Iron Formation Rock
MP-2	W-Mo Ore
DL-1A	Uranium-Thorium Ore
DH-1A	Uranium-Thorium Ore
KC-1	Zn, Pb, Sn, and Ag
PTC-1	Flotation Rocks
SO-1	Reference Soil
MA-1	Gold Ore
SCH-1	Iron Ore
PD-1	Non Ferrous Dust
GFETC	82-3664 Coal
GFETC	83-0008 Coal
SO-2	Reference Soil
SO-3	Reference Soil
CLV-1	Vegetation

EASTMAN KODAK	
TEG-50-C	Gelatin
TEG-50-B	Gelatin

USGS	
W2	Diabase Soil
BHVO-1	Basalt
106-A	Monazite Sand
107-A	Monazite Sand
110-A	Monazite Sand
AGV-1	Andesite
C20280	Coal
CLB-1	Coal

NATIONAL RESEARCH COUNCIL CANADA	
PACS-1	Marine Sediments
DOLT-1	Dogfish Liver
DORM-1	Dogfish Muscle
TORT-1	Lobster

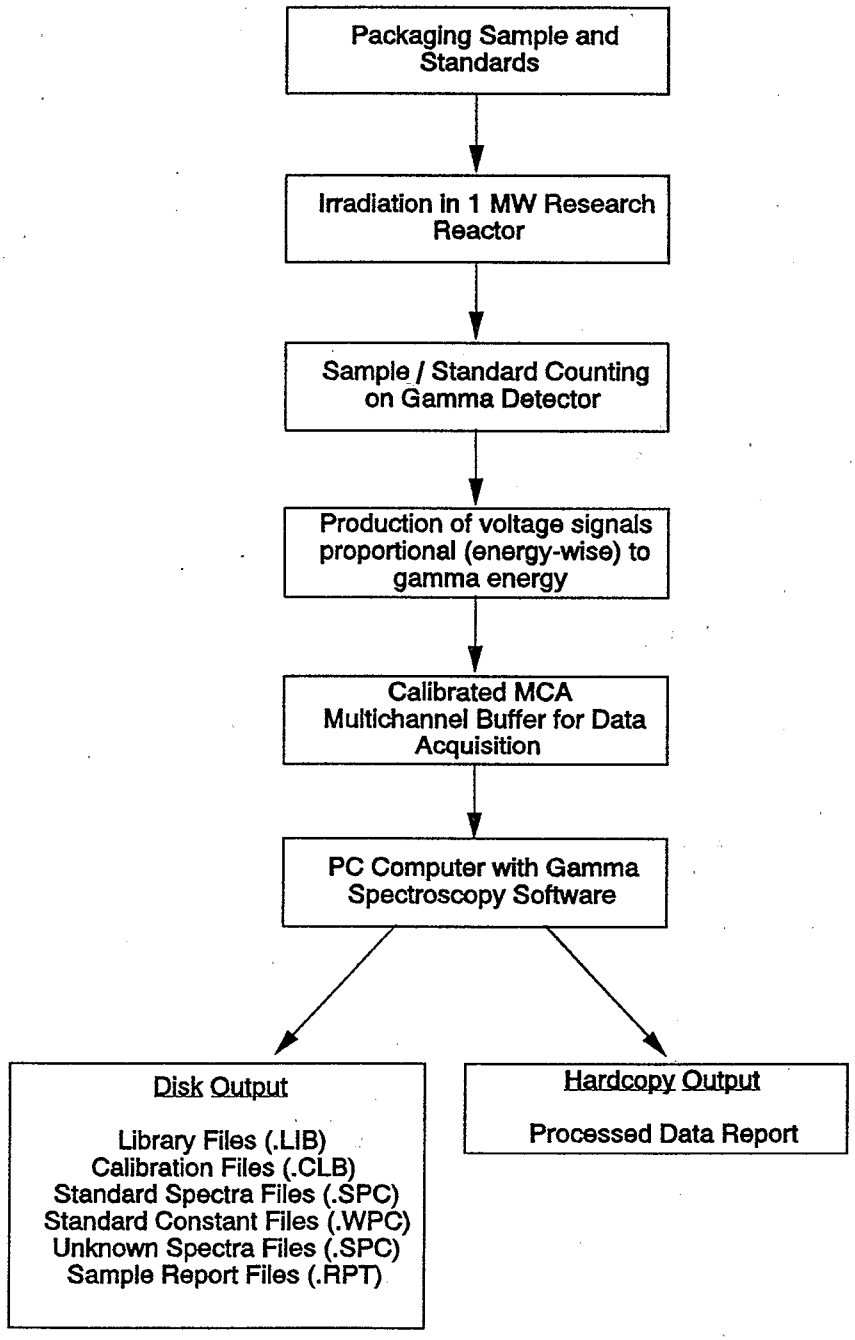

Figure 1. Neutron Activation Analysis process.

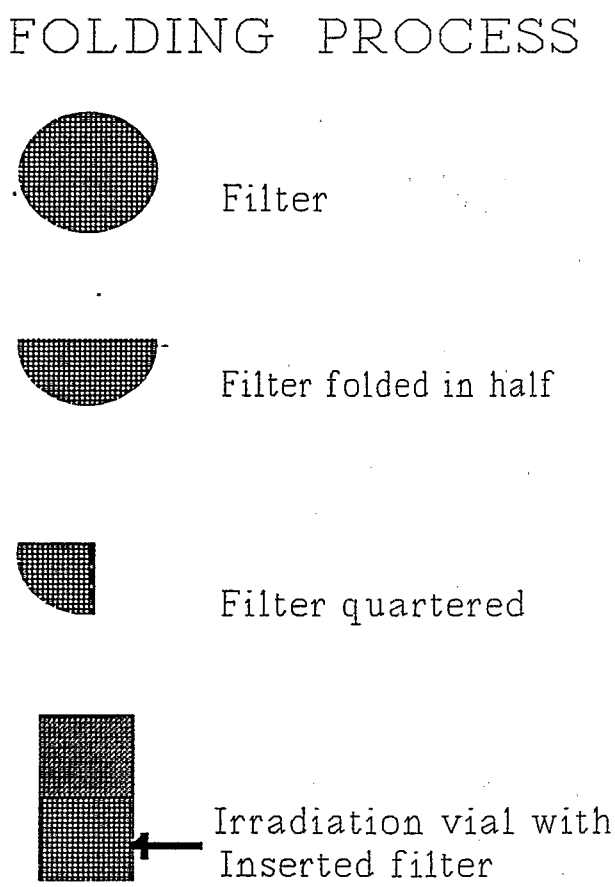

Figure 2. Air filter folding process.

```
Sample description
      SITE 38597  AIR PARTICULATE FILTER    EPA CONTROL #456238

Spectrum Filename: LONG38.SPC

Acquisition information
     Start time          21-SEP-95   15:02:54
     Live time                1200
     Real time                1333
     Dead time              10.01%
     Detector/Geometry IDs        1 &         0

Detector system
     38% GELI DETECTOR


Calibration
     Filename: QAQC38.CLB
     Created: 22-AUG-95 17:11:57 &



     Zero offset     4.034 keV:  Gain       .480 keV/channel

Library Files
     Main analysis library:           LONG38.LIB

NAC Files
     Concentration per countrate table  LONG38.WPC

Analysis parameters
     Start channel                1 for an energy of     4.51keV
     Stop channel              4048 for an energy of  1949.85keV
     Peak rejection level      200.000%
     Activity scaling factor   2.7000E+01/  1.0000E+00 =  2.7000E+01
     Detection limit method:
          MDA - EG&G ORTEC method
     Additional random error:            0.0000000E+00
     Additional systematic error:        0.0000000E+00
     Background width: best method (based on spectrum).
     Sample weight =   2.8324000E+01 grams.

Corrections                            Status          Comments
     Decay correct to date              YES       18-AUG-95 17:00:00
     Decay during acquisition           YES
     Peaked background correction       NO
     Absorption (Internal)              NO
     Geometry correction                NO
     Random summing                     NO


Energy calibration normalized difference:     .1415
```

Figure 3. NAA sample output data report.

The energy calibration was changed to fit the spectrum.
Zero offset 3.430 keV; Gain .482 keV/channel

********** U N I D E N T I F I E D P E A K S U M M A R Y **********

PEAK CHANNEL	CENTROID ENERGY	BACKGROUND COUNTS	NET AREA COUNTS	PEAK INTENSITY CTS/SEC	UNCERT 1 SIGMA %	FWHM keV	SUSPECTED NUCLIDE	
51.21	28.10	5251.	1080.	.90	10.70	1.395	Sb-125	s
66.35	35.39	13243.	176.	.15	92.74	1.246	Sb-125	s
74.96	39.54	16460.	870.	.73	23.55	1.448	-	s
88.37	46.00	19360.	513.	.43	66.58	.635	Pb-210	s
97.72	50.50	17738.	1437.	1.20	14.00	1.451	Np-239	s
112.18	57.47	12119.	489.	.41	30.13	.838	-	s
115.51	59.07	11040.	591.	.49	33.52	.799	Am-241	s
123.93	63.12	13801.	1131.	.94	14.24	.848	Th-234	
133.20	67.59	14945.	3168.	2.64	6.35	1.090	Ta-182	
148.01	74.72	15952.	635.	.53	46.80	.894	-	
167.98	84.34	7750.	382.	.32	26.25	.914	-	s
172.80	86.66	13764.	2284.	1.90	9.14	.985	Eu-155	
182.10	91.14	14386.	608.	.51	34.39	.995	Nd-147	s
188.99	94.46	15293.	4288.	3.57	4.59	1.081	Pu-239	
197.30	98.46	16534.	9718.	8.10	2.62	1.132	Pu-239	s
208.44	103.82	14296.	1027.	.86	18.67	1.166	SmGd153	s
222.69	110.69	18757.	3487.	2.91	7.01	2.237	Lu-177	s
229.93	114.17	14112.	619.	.52	29.08	.818	Lu-177	s
245.86	121.84	18613.	13559.	11.30	2.19	1.100	Eu-152	s
264.00	130.58	10443.	222.	.18	54.95	.000	-	s
268.83	132.90	12907.	3811.	3.18	5.13	.967	Hf-181	s
275.42	136.08	11605.	2243.	1.87	9.84	1.135	Se-75	
289.46	142.84	9832.	709.	.59	17.53	.662	Fe-59	sM
308.54	152.03	13925.	949.	.79	17.88	1.209	Kr-85M	
317.45	156.31	11284.	166.	.14	104.79	.638	-	sM
361.09	177.33	14993.	1456.	1.21	12.75	1.226	Cs-136	
392.07	192.24	17695.	5370.	4.47	5.33	1.132	Fe-59	
403.73	197.86	16135.	2658.	2.21	9.35	1.313	Kr-88	s
441.38	215.98	19900.	963.	.80	25.59	1.134	Ba-131	s
453.85	221.98	18953.	723.	.60	29.72	1.269	Kr-89	
469.35	229.44	14482.	380.	.32	50.33	1.071	Np-239	
501.03	244.69	14303.	1747.	1.46	11.60	1.055	Eu-152	
554.17	270.27	14835.	238.	.20	96.10	1.162	-	s
562.28	274.17	7171.	96.	.08	116.89	.858	Pb-214	s
573.30	279.47	11125.	1105.	.92	16.11	1.403	Se-75	s
616.18	300.11	12174.	359.	.30	65.41	.768	Pb-212	sM
631.29	307.38	8492.	327.	.27	38.27	.891	-	sM
675.98	328.88	5534.	257.	.21	44.69	.842	La-140	s
682.83	332.18	3253.	111.	.09	52.28	.634	Au-196	s
688.93	335.11	8620.	590.	.49	37.16	1.825	Np-239	s
699.39	340.14	9016.	732.	.61	18.71	1.164	Cs-136	sM
753.19	366.03	8760.	186.	.15	75.16	.912	Cs-138	s
760.14	369.37	5445.	105.	.09	93.75	.792	-	s
766.02	372.20	6221.	89.	.07	125.49	.679	Ba-131	s
774.79	376.42	8467.	241.	.20	63.66	.755	Pu-239	s

Figure 3. (continued)

CHANNEL	ENERGY	BACKGROUND	NET AREA	CNTS/SEC	UNCERT	FWHM	SUSPECTED	
820.28	398.30	8830.	155.	.13	90.10	.810	-	sM
825.62	400.88	8333.	443.	.37	48.61	1.193	Se-75	sM
846.20	410.77	8287.	360.	.30	42.31	1.271	Eu-152	s
856.12	415.54	6749.	613.	.51	23.58	1.495	Eu-152	
915.28	444.00	6511.	495.	.41	24.87	1.772	Eu-152	s
926.27	449.29	8670.	245.	.20	66.03	1.306	-	
981.57	475.89	5907.	196.	.16	64.32	.923	Bi-214	s
1013.96	491.46	3699.	61.	.05	111.90	.832	-	sM
1126.55	545.60	8446.	155.	.13	98.76	.992	Cs-138	s
1138.26	551.23	6945.	160.	.13	78.38	1.381	W-187	s
1146.70	555.29	7829.	179.	.15	78.66	1.058	Y-91M	s
1163.94	563.57	12028.	817.	.68	30.24	2.078	As-76	s
1175.80	569.27	9001.	1054.	.88	15.24	1.350	Cs-134	
1199.96	580.89	5782.	68.	.06	149.45	1.004	Pb-214	s
1248.80	604.37	15695.	8213.	6.84	3.42	1.598	Cs-134	s
1271.46	615.26	7944.	464.	.39	29.18	1.078	Ru-106	s
1280.63	619.67	10441.	456.	.38	45.08	1.682	Br-82	s
1333.00	644.84	11478.	143.	.12	183.71	.000	-	s
1350.89	653.44	6897.	91.	.08	108.61	.501	Sr-91	sM
1485.47	718.11	11230.	491.	.41	42.04	1.066	Bi-214	s
1497.53	723.90	9577.	841.	.70	24.47	2.794	Zr-95	s
1584.24	765.56	5962.	577.	.48	:0.49	1.548	Nb-95	s
1603.69	774.90	4523.	78.	.07	114.52	1.180	Te-131	s
1612.42	779.10	8659.	1491.	1.24	10.39	1.512	Eu-152	
1660.63	802.26	10235.	531.	.44	34.37	1.741	Cs-134	M
1728.65	834.93	12918.	3744.	3.12	6.14	1.703	Kr-88	
1744.88	842.72	8944.	361.	.30	54.79	.473	-	s
1778.00	858.63	8645.	243.	.20	66.53	.000	-	s
1821.02	879.29	15814.	1203.	1.00	26.47	1.666	Tb-160	
1926.28	929.83	9567.	315.	.26	59.18	.726	-	s
1936.61	934.79	3543.	57.	.05	139.76	.668	-	s
1972.85	952.19	6615.	108.	.09	126.38	.795	-	s
1997.01	963.79	7314.	302.	.25	59.19	1.508	Eu-152	s
2024.10	976.79	5416.	243.	.20	57.05	.748	-	s
2160.85	1042.43	3183.	166.	.14	71.10	.753	-	s
2250.63	1085.51	4158.	966.	.80	12.72	1.910	Au-198	
2304.71	1111.46	3160.	594.	.50	15.51	1.383	Eu-152	sM
2322.99	1120.23	5271.	145640.	121.37	.30	1.799	Bi-214	M
2409.68	1161.82	2061.	121.	.10	65.62	1.116	-	s
2443.29	1177.94	1785.	744.	.62	13.22	2.337	Tb-160	sM
2465.36	1188.53	2578.	613.	.51	27.75	1.948	Ta-182	
2489.02	1199.88	1499.	135.	.11	54.31	1.118	-	s
2554.40	1231.23	1387.	535.	.45	20.14	2.678	Ta-182	s
2641.15	1272.84	1718.	588.	.49	14.69	4.007	Eu-154	s
2679.09	1291.03	1910.	19017.	15.85	.90	1.960	Fe-59	
2695.80	1299.04	1264.	162.	.14	40.04	1.259	I-133	s
2707.22	1304.52	564.	72.	.06	55.14	.745	-	s
2722.40	1311.79	1399.	118.	.10	67.63	.624	-	s
2764.17	1331.82	2024.	9797.	8.16	1.65	1.963	Co-60	
2831.59	1364.14	1507.	258.	.22	41.22	1.421	-	s
2905.96	1399.79	1130.	260.	.22	27.36	2.136	-	s
2921.52	1407.25	1226.	1655.	1.38	5.33	1.951	Eu-152	

Figure 3. (continued)

CHANNEL	ENERGY	BACKGROUND	NET AREA	CNTS/SEC	UNCERT	FWHM	SUSPECTED
2955.35	1423.46	285.	17.	.01	113.65	.541 -	s
3002.04	1445.84	635.	79.	.07	56.53	.909 -	s
3031.48	1459.94	964.	158.	.13	40.03	2.032 K-40	s
3114.49	1499.7	472.	48.	.04	69.71	.985 -	s
3167.84	1525.28	504.	20.	.02	152.25	.969 K-42	s
3173.70	1528.09	912.	53.	.04	161.75	.662 -	s
3284.22	1581.03	935.	104.	.09	61.32	1.464 -	s
3325.20	1600.65	690.	65.	.05	81.94	.691 -	s
3392.88	1633.06	549.	64.	.05	69.40	1.192 -	s
3550.03	1689.16	787.	319.	.27	20.47	1.672 Sb-124	s
3625.10	1744.25	331.	23.	.02	103.11	.585 -	s
3682.28	1771.62	583.	59.	.05	71.82	1.419 Co-56	s
3699.02	1779.63	535.	68.	.06	66.59	.776 -	s
3962.72	1905.82	146.	17.	.01	110.18	.582 -	s
3967.78	1908.24	103.	14.	.01	113.65	.751 -	s

s Peak fails shape tests.
M Peak issclose to a library peak.

********** I D E N T I F I E D P E A K S U M M A R Y **********

NUCLIDE	PEAK CHANNEL	CENTROID ENERGY	BACKGROUND COUNTS	NET AREA COUNTS	INTENSITY CTS/SEC	UNCERT 1 SIGMA	FWHM keV
CE-141	294.75	145.39	16561.	18561.	15.47	1.78	1.049
CA-SC47	323.62	159.29	10932.	137.	.11	108.06	.564s
LU-177	26.66	208.89	15220.	270.	.23	79.35	.987
SE-75	542.49	264.64	10854.	1337.	1.11	12.62	1.196
TB-160	614.62	299.36	11566.	4521.	3.77	4.98	2.548s
TH-PA233	640.52	311.82	12241.	14737.	12.28	1.57	1.237
CR-51	657.56	320.02	11009.	9420.	7.85	2.26	1.275
EU-152	707.75	344.17	10106.	7899.	6.58	2.78	1.383s
YB-175	819.38	397.87	9126.	613.	51	31.43	1.049s
HF-181	994.66	482.18	9142.	3986.	3.32	4.45	1.360
BA-131	1025.00	496.77	9825.	526.	.44	34.22	1.331
[illegible]	[illegible]	[illegible]	[illegible]	[illegible]	[illegible]	[illegible]	[illegible]
AG-110M	1359.90	657.77	12933.	336.	.28	70.63	.741s
ZR-95	1566.55	757.06	8927.	334.	.28	51.31	.592s
CS-134	1647.32	775.86	8888.	4812.	4.01	4.47	1.747
NI-CO58	1677.40	810.31	7748.	474.	.39	32.52	1.694
SC-46	1841.66	889.20	17338.	175795.	146.50	.29	1.654
RB-86	2230.73	1075.96	4884.	530.	1.27	15.36	1.857s
FE-59	2278.68	1098.97	4754.	28146.	23.46	.82	1.818
ZN-65	2313.05	1115.46	5486.	904.	.75	15.69	1.214s
CO-60	2432.70	1172.86	2607.	10668.	8.89	1..4	1.899
TA-182	2533.41	1221.17	1565.	672.	.56	12.39	2.103

s Peak fails shape tests.
D Peak area deconvoluted.

Figure 3. (continued)

```
*****   S U M M A R Y   O F   N U C L I D E S   I N   S A M P L E   *****
         TIME OF COUNT  TIME CORRRCTED  UNCERTAINTY  1 SIGMA
NUCLIDE     ACTIVITY       ACTIVITY       COUNTING
         PCI/FILTER     PCI/FILTER
+-+-+-+-+-+-+-+-+-+-+-+-+-+-+-+-+-+-+-+-+-+-+-+-+-+-+-+-+-+-+-+-+-+-+-+-+-+-+-+
CE-141       5.7446E+01     1.1842E+02          1.78%
CA-SC47      2.9450E-01     2.7921E+02        108.06%
LU-177  <      9.29E-02       3.02E+00
SE-75        6.7286E-01     8.1717E-01         12.62%
TB-160  <      3.02E-02       4.17E-02
CH-BA233     2.4510E+00     5.5300E+00          2.85%
EU-152 #     1.6722E+00     1.6810E+00          2.78%
YB-175  <      1.44E-02       3.84E+00
HF-181       8.7521E-01     1.4827E+00          4.45%
BR-81   <    4.1734E-02     3.2288E+00         34.22%
ND-147 #     1.7114E-01     1.4340E+00         52.29%
AG-110M#     1.1270E-01     1.2367E-01         70.63%
ZR-95        6.3816E-01     9.1626E-01         51.31%
NS-C058      1.0602E+00     1.3000E+00         32.52%
SC-46        3.1370E+02     4.1516E+02           .29%
RB-86  #     1.8377E+00     6.4784E#00         15.36%
FE-59        3.2557E+01     5.4832E+01           .82%
ZN-66   <    1.6138E+02     1.2208E+02          1.44%
TA-182       8.1669E-01     1.0018E+00         12.39%

  #   All peaks for activity calculation had bad shape.
----------------------------  S U M M A R Y  ----------------------------
TOTAL AATIVITY (    3.9 to  1946.6 keV) 9.2716130E+02  PCI/FILTER

*********  S U M M A R Y   O F   D I S C A R D E D   P E A K S   *********
  208.40 ? LU-177     298.60 & TB-160     344.20 * EU-152     396.10 & YB-175
  514.00 ? SR-85      657.40 **AG-110M   1115.40 ? ZN-65

  * - Peak is too wide, but only one peak in library.
  ! - Peak is part of a multiplet and this area went
      negative during deconvolution.
  ? - Peak is too narrow.
  @ - Peak is too wide aa FW25M, but ok at FWHM.
  % - Peak fails sensitivity test.
  $ - Peak identified, but first peak of this nuclide
      failed one or more qualification tests.
  + - Peak activity higher than counting uncertainty range.
  - - Peak activity lower  han counting uncertainty range.
  = - Peak outside analysis energy range.
  & - Calculated peak centroid is not close enough to the
      library energy centroid for positive identification.
  P - Peakbackground subtraction
```

Figure 3. (continued)

S U M M A R Y O F N U C L I D E C O N C E N T R A T I O N S

ELEMENT	TIME OF COUNT CONCENTRATION PPM	TIME CORRECTED CONCENTRATION PPM	UNCERTAINTY 1 SIGMA COUNTING
CERIUM	6.7245E-02	1.3862E-01	1.70%
CALCIUM	1.8274E-02	1.7325E+01	108.00%
LUTETIUM	0.0000E+00	0.0000E+00	.00%
SELENIUM	8.3820E-03	1.0180E-02	12.60%
TERBIUM	9.5249E-04	1.3144E-03	4.90%
THORIUM	9.5379E-03	2.2783E-02	1.50%
CHROMIUM	7.5336E-02	1.7550E-01	2.20%
EUROPIUM	1.6366E-03	1.6446E-03	2.70%
YTTERBIUM	2.6731E-04	7.1331E-02	31.40%
HALFNIUM	3.6694E-03	6.2163E-03	4.40%
BARIUM	9.9312E-02	7.6714E-01	34.20%
STRONTIUM	2.2194E-01	3.2047E-01	39.30%
NEEDYNIUM	7.6179E-03	6.3831E-02	52.20%
SILVER	1.0487E-02	1.1509E-02	70.60%
ZIRCONIUM	7.5958E-02	1.0906E-01	51.30%
CESIUM	6.6270E-03	6.8363E-03	4.40%
NICKEL	5.1279E-02	7.1309E-022	32.50%
SCANDIUM	1.5329E-02	2.0287E-02	.20%
RUBIDIUM	6.7420E-02	2.3767E-01	15.30%
IRON	1.8756E+01	3.1590E+01	.80%
ZINC	4.9523E-02	5.4510E-02	15.60%
COBALT	2.1168E-02	2.1734E-02	1.40%
TANTALUM	9.8942E-04	1.2136E-03	12.30%

********* S U M M A R Y O F D I S C A R D E D P E A K S *********

208.40 ? LU-177

* - Peak is too wide, but only one peak in library.
! - Peak is part of a multiplet and this area went negative during deconvolution.
? - Peak is too narrow.
@ - Peak is too wide at FW25M, but ok at FWHM.
% - Peak fails sensitivity test.
$ - Peak identified, but first peak of this nuclide failed one or more qualification tests.
\+ - Peak activity higher than counting uncertainty range.
\- - Peak activity lower than counting uncertainty range.
= - Peak outside analysis energy range.
& - Calculated peak centroid is not close enough to the library energy centroid for positive identification.
P - Peakbackground subtraction

Figure 3. (continued)

EPA/625/R-96/010a

Compendium of Methods for the Determination of Inorganic Compounds in Ambient Air

Chapter IO-4

DETERMINATION OF REACTIVE ACIDIC AND BASIC GASES AND STRONG ACIDITY OF ATMOSPHERIC FINE PARTICLES IN AMBIENT AIR USING THE ANNULAR DENUDER TECHNOLOGY

OVERVIEW

Center for Environmental Research Information
Office of Research and Development
U.S. Environmental Protection Agency
Cincinnati, OH 45268

January 1997

Chapter IO-4

DETERMINATION OF REACTIVE ACIDIC AND BASIC GASES AND STRONG ACIDITY OF ATMOSPHERIC FINE PARTICLES IN AMBIENT AIR USING THE ANNULAR DENUDER TECHNOLOGY

OVERVIEW

Acid aerosols are found in the atmosphere as a result of atmospheric reaction of emissions from a variety of fossil fuel combustion sources, including power plants, industrial and commercial facilities, hazardous waste storage and treatment facilities, etc. Awareness of the effects of acid aerosols concentrations on human health and property has been documented over the past several years. The Clean Air Act Amendments of 1970 required the U. S. Environmental Protection Agency (EPA) to develop uniform national ambient air quality standards (NAAQS) for pollutants that were recognized as widespread (emitted by numerous mobile and stationary sources) and that endangered public health and welfare. Further, Section 109 of the Clean Air Act, as amended, requires EPA to periodically review the NAAQS as well as the scientific information and data on which they are based. New pollutants are identified for NAAQS development if the Administrator concludes that they may reasonably be anticipated to endanger public health and welfare.

To assist the Administrator in evaluating the need for new or revised NAAQS, the Clean Air Act created the Clean Air Scientific Advisory Committee (CASAC). This committee's mandate is to provide the Administrator with scientific advice and research recommendations on critical areas of knowledge on new or revised NAAQSs. The Acid Aerosol Subcommittee of CASAC identified a need for a coordinated acid aerosol research program to assist the Agency in making recommendations on a proposed NAAQS for fine particle acid aerosol. The Subcommittee recommended a research program that addresses characterization and exposure assessment, animal toxicity, human exposure research, and epidemiology. As documented in the CASAC Report to the Administrator, the foundation for any research program and potential air quality standard development is "*...a measurement method, not only because the standard itself must specify the method, but equally important, because before establishing a standard the contaminant must be fully characterized and exposure measurements made to correlate with health outcomes.*" The National Exposure Research Laboratory (NERL) of EPA was directed by CASAC to obtain the information needed for scientifically assessing a possible fine particle standard for acid aerosols to protect human health.

In 1989, NERL conducted a workshop to determine and exchange views on the various methods that have been and are being used to measure aerosol acidity. The workshop was held in response to recommendations by CASAC to identify issues associated with characterizing aerosol acidity and acid aerosol measurement methods. The workshop was structured to accomplish two principal objectives. The first objective was to identify appropriate indicators and methodologies for characterizing aerosol acidity; the second was to develop ideas and recommendations for evaluating acid aerosol methods currently in use. The workshop participants identified the development of an accurate, reliable, and interference-free method as an important initial research objective.

The participants concluded that the most appropriate indicator of aerosol acidity is the fine particle strong acidity component of the atmosphere (i.e., the amount of strong acidity available in the fine particle component of the atmospheric aerosol). Sampling would involve the use of an annular denuder followed by a 37 mm Teflon® filter to trap the fine particle acid aerosol. After sampling, the filter is

returned to the laboratory for extraction and analysis. After extracting the acid aerosol from the 37 mm Teflon® filter with an aqueous solution of perchloric acid at a pH of approximately 4.00 (to prevent dissociation of weak acids), the available hydrogen ion is measured either by titration or by pH. This defines atomospheric fine particle acid aerosol as free hydrogen ion and hydrogen ion available from either undissociated of weak ion available from either undissociated sulfuric acid or from undissociated bisulfate ion. Atmosphere acidity is reported as either nanomoles of hydrogen ion per standard cubic meter of air (nmoles/m^3) or as equivalent sulfuric acid in micrograms per standard cubic meter of air ($\mu g/m^3$).

In December 1989 and February 1990, Intercomparison Studies were held at the EPA's NERL facility in Research Triangle Park, NC, to quantify the performance methods currently used to measure fine particle acid aerosol in epidemiology studies to ensure comparability of measurements by different groups. The criteria for selecting the participants for the initial Pilot Intercomparison Study was that they represented monitoring systems that were being used in epidemiological field studies currently in progress or that they had developed a prototype sampler under contract to EPA that the agency wanted evaluated. Based upon those criteria, three research groups were invited. They were: Harvard School of Public Health, Robert Wood Johnson (RWJ) Medical School and Research Triangle Institute (RTI). Each group used a variation of the annular denuder system (ADS) to determine fine particle acid aerosol of a standardized test atmosphere.

Based upon the findings of the Pilot Intercomparison Study, NERL developed this Chapter entitled *"Determination of the Reactive Acidic and Basic Gases and Strong Acidity of Atmospheric Fine Particles in Ambient Air Using Denuder Technology."* This standard methodology represents a composite of the most viable features of the three research methods utilized in the Pilot Intercomparison Study. The following table identifies the annual denuder methods discussed in Chapter IO-4 along with the constituents monitored by those methods.

Method	Title	Constituent Detected
IO-4.1	Determination of the Strong Acidity of Atmospheric Fine Particles (<2.5 μm) Using Annular Denuder Technology	Fine Particl Acid Aerosol (H^+)
IO-4.2	Determination of Reactive Acidic and Basic Gases and Strong Acidity of Atmospheric Fine Particles in Ambient Air Using Annular Denuder Technology	HNO_3, NH_3, HCl, SO_2, NH_4^+, $SO_4^=$, NO_3^-, Fine Particle Acid Aerosol (H^+)

The unique features of the annular denuder that separate it from other established monitoring methods are the elimination of sampling artifacts due to interaction between the collected gases and particles and the preservation of the samples for subsequent analysis. Compendium Method IO-4.1 utilizes a denuder for removing ammonia interference and a filter assembly for determining atmospheric fine particle acid aerosol in ambient air. The method does not, however, account for potential interferences from nitric acid, ammonium nitrate aerosol (NH_4NO_3), or other ammonium salts that might bias the acidity measurement. Compendium Method IO-4.2 does correct for potential biases by an additional denuder upstream of the filter assembly to selectively remove and quantitate acid gases (nitric acid vapor and

sulfur dioxide) from the gas stream prior to filtration. In addition, to correct for biases due to the dissociation of ammonium nitrate aerosol captured on the Teflon® filter, Compendium Method IO-4.2 uses a backup Nylon® filter to capture the dissociated HNO_3 from NH_4NO_3 followed by a glass-fiber filter impregnated with citric acid to retain the dissociated NH_3 from NH_4NO_3. The ammonia concentration is subtracted from the nitrate value, and the result is added to the acidity measurement on the Teflon® filter to give a corrected measurement of the atmospheric fine particle strong acidity.

The techniques, procedures, equipment, and other specifications comprising Compendium Methods IO-4.1 and IO-4.2 are derived and composited from those used by the contributing research organizations and, therefore, are known to be serviceable and effective. At this stage, these methods are unified, consensus, tentative drafts intended for further application and testing. Users should be advised that the methods have not yet been adequately tested, optimized, or standardized. Many of the specifications have been initially established by technical judgement and have not been subjected to rugged testing. In some cases alternative techniques, equipment, or specifications may be acceptable or superior. In applying these methods, users are encouraged to consider alternatives with the understanding that they should be tested to determine their adequacy and to confirm and document any advantages.

EPA/625/R-96/010a

Compendium of Methods for the Determination of Inorganic Compounds in Ambient Air

Compendium Method IO-4.1

DETERMINATION OF THE STRONG ACIDITY OF ATMOSPHERIC FINE-PARTICLES (<2.5 μm)

Center for Environmental Research Information
Office of Research and Development
U.S. Environmental Protection Agency
Cincinnati, OH 45268

January 1997

Acknowledgements

This Method is a part of *Compendium of Methods for the Determination of Inorganic Compounds in Ambient Air* (EPA/625/R-96/060a), which was prepared under Contract No. 68-C3-0315, WA No. 2-10, by Midwest Research Institute (MRI), as a subcontractor to Eastern Research Group, Inc. (ERG), and under the sponsorship of the U.S. Environmental Protection Agency (EPA). Justice A. Manning, Center for Environmental Research Information (CERI), and Frank F. McElroy, National Exposure Research Laboratory (NERL), both in the EPA Office of Research and Development, were the project officers responsible for overseeing the preparation of this method. Other support was provided by the following members of the Compendia Workgroup:

- James L. Cheney, Corps of Engineers, Omaha, NB
- Michael F. Davis, U.S. EPA, Region 7, KC, KS
- Joseph B. Elkins Jr., U.S. EPA, OAQPS, RTP, NC
- Robert G. Lewis, U.S. EPA, NERL, RTP, NC
- Justice A. Manning, U.S. EPA, ORD, Cincinnati, OH
- William A. McClenny, U.S. EPA, NERL, RTP, NC
- Frank F. McElroy, U.S. EPA, NERL, RTP, NC
- William T. "Jerry" Winberry, Jr., MRI, Cary, NC

This Method is the result of the efforts of many individuals. Gratitude goes to each person involved in the preparation and review of this methodology.

Author(s)

- William T. "Jerry" Winberry, Jr., MRI, Cary, NC
- Thomas Ellestad, U.S. EPA, RTP, NC
- Bob Stevens, U.S. EPA, RTP, NC

Peer Reviewers

- Delbert Eatough, Brigham Young University, Provo, UT
- Shere Stone, University Research Glassware Corp., Chapel Hill, NC
- Petros Koutrakis, Harvard School of Public Health, Boston, MA
- J. Waldman, Robert Wood Johnson Medical School, New Brunswick, NJ

DISCLAIMER

This Compendium has been subjected to the Agency's peer and administrative review, and it has been approved for publication as an EPA document. Mention of trade names or commercial products does not constitute endorsement or recommendation for use.

Method IO-4.1
Determination of the Strong Acidity of Atmospheric Fine-Particles (<2.5 μm)

TABLE OF CONTENTS

	Page
1. Scope	4.1-1
2. Applicable Documents	4.1-1
2.1 ASTM Standards	4.1-1
2.2 Other Documents	4.1-1
3. Summary of Method	4.1-2
4. Significance	4.1-2
5. Definitions	4.1-3
6. Apparatus	4.1-4
6.1 Sampling	4.1-4
6.2 Analysis	4.1-6
7. Reagents and Materials	4.1-7
8. Preparation of Impactor Frit and Denuder Coating	4.1-8
9. Impactor Frit Installation	4.1-8
9.1 Impactor Frit Installation	4.1-8
9.2 Impactor Frit Coating	4.1-9
10. Filter Preparation and Assembly	4.1-9
11. Annular Denuder System Preparation	4.1-10
11.1 Coating Procedure	4.1-10
11.2 Drying Procedure	4.1-10
11.3 Denuder System Assembly	4.1-11
11.4 Laboratory Leak-Check of ADS	4.1-11
12. Sampling	4.1-12
12.1 Placement of Denuder System	4.1-12
12.2 Start-Up	4.1-13
12.3 Sample Shutdown	4.1-14
12.4 Corrective Action for Leak Test Failure	4.1-14
13. ADS Disassembly	4.1-15
14. Extraction Procedure	4.1-15
15. pH ANALYSIS	4.1-16
15.1 Standard and Reagent Preparation	4.1-16
15.2 Calibration of pH Meter	4.1-18
15.3 Pre-Analysis Calibration	4.1-18
15.4 pH Test of $HClO_4$ Solutions	4.1-19
15.5 Analysis of Working Standard	4.1-19
15.6 Analysis of Filter Extracts	4.1-20
16. Assumption of Annual Denuder System	4.1-20
17. Atmospheric Species Concentration Calculations	4.1-20
17.1 Calculations Using Results from pH Measurement	4.1-20
17.2 Calculation of Air Volume Sampled, Corrected to Standard Conditions	4.1-21
17.3 Calculation of Strong Acidity Aerosol Concentration	4.1-22
18. Method Safety	4.1-23

TABLE OF CONTENTS (continued)

	Page
19. Performance Criteria and QA	4.1-23
19.1 Standard Operating Procedures (SOPs)	4.1-23
19.2 QA Program	4.1-23
20. References	4.1-23

Chapter IO-4
ATMOSPHERIC ACIDIC CONSTITUENTS

Method IO-4.1
DETERMINATION OF THE STRONG ACIDITY OF ATMOSPHERIC FINE-PARTICLES (<2.5 μm)

1. Scope

1.1 The quantitative determination of equivalent strong-acid (H_2SO_4) acidity of fine-particle (<2.5 μm) in the atmosphere as hydrogen ion by pH analysis, is described in this method. The method is a composite of methodologies developed by U. S. Environmental Protection Agency (EPA), University of Kansas, Robert Johnson Medical School, New York State University, Harvard University and the CNR Laboratories (Italy). It is currently employed in a number of air pollution studies in Italy, United States, Canada, Mexico, Germany, Austria, and Spain, and in public health services and epidemiology and environmental research centers. The techniques, procedures, equipment, and other specifications comprising this method are derived from those used by the contributing research organizations and, therefore, are known to be serviceable and effective. At this stage, this method is a unified, consensus, tentative, draft method intended for further application and testing. Users should be advised that the method has not yet been adequately tested, optimized, or standardized. Many of the specifications have been initially established by technical judgment but have not been subjected to rugged testing. In some cases, alternative techniques, equipment, or specifications may be acceptable or superior. In applying the method, users are encouraged to consider alternatives, with the understanding that they should be tested to determine their adequacy and to confirm and document their possible advantages. Information and comments are solicited on improvements, alternative equipment, techniques, specifications, performance, or any other aspect of the method.

1.2 The equipment described herein can be modified to measure acidity of atmospheric reactive acidic and basic gases in both indoor and outdoor atmospheres, as documented in Method IO-4.2, entitled *"Determination of Reactive Acidic and Basic Gases and Strong Acidity of Atmospheric Fine Particles in Ambient Air Using the Annular Denuder Technology."* Modifications to this methodology were developed for monitoring regional-scale acidic and basic gases and particulate matter in support of EPA field programs involving the Integrated Air Cancer Research Program and the Acid Deposition Network. Similarly, the methodology has been used to characterize urban haze in Denver, Houston, Boston, and Los Angeles.

2. Applicable Documents

2.1 ASTM Standards

- D1356 *Definitions of Terms Related to Atmospheric Sampling and Analysis.*

2.2 Other Documents

- Ambient Air Studies (1-24).
- U.S. EPA Acid Aerosol Document (25).

3. Summary of Method

3.1 The annular denuder system (ADS) consists of an inlet with an impactor or cyclone preseparator designed to remove all particles with a DP_{50} of 2.5 μm or greater, an annular denuder to remove ammonia, and a filter for collecting the aerosol. In operation, air is drawn through a cyclone or a elutriator-accelerator jet assembly followed by an impactor frit and coupler assembly, through the denuder to remove ammonia, and into a single-stage filter assembly. The single-stage filter assembly contains a 47-mm Teflon® filter supported by a stainless steel screen. The filter is a 2 μm pore-size Teflon® membrane filter, Zefluor (Gelman Sciences). The Teflon® filter collects the fine aerosol. A pump unit maintains a flow of 10 Lpm, and a timer allows programmed start and end times. The ADS with a cyclone assembly, the ADS with an impactor assembly, and the field sampling box with the pump-timer system are shown in Figure 1a, 1b, and 2, respectively.

3.2 Following each run, the ADS assembly is removed from its field housing, its ends are capped, and it is brought back to the laboratory. In the laboratory, the assembly pieces are uncoupled and capped. The denuder tube is not extracted. The Teflon® filter is unloaded from the filter assembly in an ammonia-free atmosphere and either immediately extracted or stored in an ammonia-free container for later extraction. A glove-box, lined with citric-acid soaked paper, is used to maintain an ammonia-free atmosphere. To remove the Teflon® filter, it is placed in an extraction vessel, particle-laden side down. The filter is wetted with 200 μL of methanol, then removed with 6.0 mL of extraction solution (ES). The extraction vessel is put in an ultrasonic bath for 20 min. The extraction solution is then decanted into a container.

3.3 Acidity determination is made using pH measurements of 1 mL aliquot of the extracted filter solution. Filter acidity is calculated based on standards made with sulfuric acid. The standards range from 0-160 μg, equivalent to strong acid aerosol. A pH meter is used to measure the pH of the filter extract. For each batch of filter extracts, a calibration curve is calculated using the mean pH of each standard.

4. Significance

4.1 Acid aerosols are found in the atmosphere as a result of atmospheric reactions of emissions from a variety of fossil fuel combustion sources, including power plants, industrial and commercial facilities, hazardous waste storage and treatment facilities, etc. The effects of concentrations of acid aerosols on human health and property has been documented over the past several years. The Clean Air Act Amendments of 1970 of required EPA to develop uniform national ambient air quality standards (NAAQS) for criteria pollutants because of the interstate nature of certain air pollutants. NAAQS were established for pollutants that were recognized as widespread (emitted by numerous mobile and stationary sources) and that endangered public health and welfare. Further, Section 109 of the Clean Air Act as amended, requires EPA to periodically review the NAAQS as well as the scientific information and data on which they are based. New pollutants are to be identified for NAAQS development if the Administrator concludes that they reasonably may be anticipated to endanger the public health and welfare. To assist the Administrator in evaluating the need for new or revised NAAQS, the Clean Air

Act created the Clean Air Scientific Advisory Committee (CASAC). This committee's mandate is to provide the Administrator with scientific advice and research recommendations on critical areas of knowledge on new or revised NAAQS. The Acid Aerosol Subcommittee of CASAC identified a need for a coordinated acid aerosol research program to assist the Agency in making recommendations on a new acid aerosol NAAQS. The Subcommittee recommended a research program involving characterization and exposure assessment, animal toxicity, human exposure research, and epidemiology. As documented in the CASAC Reporter to the Administrator, the foundation for any research program and potential air quality standard development is "*...a measurement method, not only because the standard itself must specify the method, but equally important, because before establishing a standard the contaminant must be fully characterized and exposure measurements made to correlate with health outcomes.*"

4.2 Unique features of the annular denuder that separate it from other established monitoring methods are the elimination of sampling artifacts due to interaction between the collected gases and particles and the preservation of the samples for subsequent analysis. These features are accomplished in Method IO-4.2 by removing ammonia (NH_3) in the gas stream with the citric acid-coated denuder to reduce the probability of the acid aerosol captured by the Teflon® filter in the filter pack from being neutralized to ammonium sulfate [$(NH_4)_2SO_4$].

5. Definitions

[Note: Definitions used in this document and any user-prepared Standard Operating Procedures (SOPs) should be consistent with those used in ASTM D1356. All abbreviations and symbols are defined within this document at the point of first use.]

5.1 Secondary Particles (or Secondary Aerosols). Aerosols that form in the atmosphere as a result of chemical reactions, often involving gases. A typical example is sulfate ions produced by photochemical oxidation of sulfur dioxide.

5.2 Aerosol. A dispersion of solid or liquid particle in a gas-phase medium and a solid or liquid disperse phase. Aerosols are formed by (1) the suspension of particles due to grinding or atomization or (2) the condensation of supersaturated vapors.

5.3 Coarse and Fine Particles. Particles with diameters (aerodynamic) greater than 2.5 μm that are removed by the sampler's inlet; fine particles are those with diameters (aerodynamic) less than 2.5 μm that are collected on the Teflon® filter. These two fractions are usually defined in terms of the separation diameter of a sampler.

5.4 Annular. Refers to rotating to, or forming a ring. In the annular denuder sampler, the annular refers to the annulus between two concentric tubes. Chemical coating applied to the interior surfaces removes gaseous pollutants that diffuse to the surface.

5.5 Denuder. Refers to the sections in which interfering gases are removed from the sample stream prior to filtration in determining fine particle (<2.5 μm) strong acidity.

5.6 Equivalent Weight. The equivalent weight, or combining weight of a compound or ion is its formula weight divided by the number of replaceable hydrogen atoms.

5.7 Normal Solution. Solution that contains a gram-equivalent weight of solute in a liter of solution.

6. Apparatus

[Note: This method was developed using the annular denuder system provided by University Research Glassware, 116 s. Merritt Mill Road, Chapel Hill, NC 27516, (919) 942-2753, as a guideline. EPA has experience in use of this equipment during various field monitoring program over the last several years. Other manufacturers' equipment should work as well. However, modifications to these procedures may be necessary if another commercially available sampler is selected.]

6.1 Sampling

6.1.1 Elutriator and acceleration jet (inlet) assembly. Under normal sampling conditions, the elutriator or entry tube is made of either Teflon®-coated glass or aluminum, as illustrated in Figure 3. When using glass, the accelerator jet assembly, which directs the air flow towards an impactor plate, is fixed onto the elutriator and the internal surfaces of the entire assembly are coated with Teflon® (Figure 3a). When aluminum is used, the accelerator jet assembly is removable. The jet is made of Teflon® or polyethylene, and the jet support is made of aluminum (Figure 3b). Again, all internal surfaces are coated with Teflon®.

6.1.2 Teflon® impactor support pin and impactor frit support tools (see Figure 4). These parts are made of either Teflon® or polyethylene and aid in assembling, removing, coating and cleaning the impactor frit.

6.1.3 Impactor frit and coupler assembly (see Figure 5). The impactor frit is 10 mm x 3 mm and is available with a porosity range of 10-20 μm. The frits should be made of porous ceramic material or fritted stainless steel. Before use, the impactor frit surface is coated with a Dow Corning 660 oil and toluene solution and sits in a Teflon® seat support fixed within the coupler. The coupler is made of thermoplastic and has Teflon® clad sealing "0"-rings that are located on both sides of the seat support inside the coupler.

[Note: In situations with substantial high concentrations of coarse particles (> 2.5 μm), a Teflon®-coated aluminum cyclone should be used in place of the acceleration jet and impactor assembly, as illustrated in Figure 1. The location of the cyclone with respect to the denuder, heated enclosure, and meter box is illustrated in Figure 1.]

6.1.4 Annular Denuder (see Figure 6). The denuder consists of two or more concentric glass tubes with an outer stainless steel shell. The tubes create a 1 mm annular spacing, which allows the air sample to pass through. Flow in the annular space is maintained in the laminar range and allows fine particles with diameters less than 2.5 μm to pass through with negligible removal. The inner tube is inset 25 mm from one end of the outer tube; this end is called the flow straightener end. The other end of the inner tube is flush with the end of the outer tube. Both ends of the inner tube are sealed. In this configuration, the flow straightener end is etched to provide greater surface area for the coating. The inner glass tubes are inset 25 mm from one end of the outer Teflon®-coated aluminum tube to serve as the flow

straightener end. All denuder types should be equipped with thermoplastic (Bakelite) or polyethylene caps when purchased.

6.1.5 Caps for Annular Denuder. Caps are made of either polyethylene (Caplugs, Protective Enclosure, Inc.) or thermoplastic (Bakelite) and are used in the coating and drying processes and for storage and shipment. The thermoplastic caps include a removable Teflon® seal plate when purchased.

[Note: Recent evaluation of the caps for the denuder system has indicated that the thermoplastic (Bakelite) screen caps and the polyethylene screw caps are useful to seal the ends of the denuders when they are dry. However, during coating and extracting, the Caplugs (Protective Enclosures, Inc.) provide a better seal, preventing contamination that would occur from the Teflon® liner of the thermoplastic screw caps or direct contact with the unprotected thermoplastic screw caps. Therefore the user should use Caplugs during coating and extraction operations.]

6.1.6 Annular Denuder Couplers. The couplers should be made of thermoplastic and equipped with Teflon® "O"-rings that sandwich a silicone rubber ring on three sides. This design provides elasticity for better sealing under extremely cold temperature conditions in which Teflon® does not give. The couplers are equipped with permanent seal rings, which provide more even threading and a better seal when coupled. The couplers are used to couple the annular denuders together when used in series (see Method IO-4.2) and for coupling the last denuder with the filter assembly.
Caution: When utilizing the couplers, do not overtighten when applying a glass denuder. Overtightening may "chip" the ends of the denuder, preventing a tight seal.

6.1.7 Drying Manifold Assembly (see Figure 7). The manifold is made of glass and is available to accommodate as many as four drying denuders. The denuders are attached to the manifold with back-to-back Bakelite bored caps, as illustrated in Figure 7. Air is pushed through an air dryer/cleaner bottle made of 2 1/2" heavy wall glass that contains silica gel. The Teflon® tubing that connects the dryer/cleaner bottle to the drying manifold should be secured at each cap with either Teflon® washers or Teflon® washers coupled with Teflon® hose barbs. The air stream then passes through a fine particle filter to remove fines. Alternatively, dry compressed air from a cylinder may be used in place of the dryer/cleaner bottle assembly.

6.1.8 Filter Assembly. The denuder is followed by a single-stage filter assembly containing the Teflon® membrane filter (see Figure 8). The filter is supported by a stainless steel porous screen and housed in a polyethylene filter ring housing. The filter housing outlet component is aluminum and accommodates a polyethylene screw sleeve which seals the filter assembly.

6.1.9 Vacuum Tubing. Low density polyethylene tubing, 3/8" diameter for distances of less than 50 ft., 1/2" diameter for distances greater than 50 ft. [Fisher-Scientific, 711 Forbes Ave., Pittsburgh, PA 15219 (412-787-6322)].

6.1.10 Tube Fitting. Compression fittings (Swagelok®, Gyrolok® or equivalent) are used to connect vacuum tubing (above) to an NPT female connector or filter holder and connect vacuum tubing to fitting on differential flow controller. The fittings may be constructed of any material since they are downstream of the sampler. [Fisher-Scientific, 711 Forbes Ave., Pittsburgh, PA 15219 (412-787-6322)].

6.1.11 Annular Denuder System (ADS) Sampling Box. The housing box is made of a "high-impact" plastic and is thermally insulated. It is 2 ft long by 6" wide and 6" deep. The box contains a heater unit, a fan, and an air outlet located in the lid of the housing. The elutriator end of the ADS protrudes through one end of the box, while the denuder is supported in the box by a chrome plated spring clip. If the Teflon®-coated aluminum cyclone is used to remove coarse particles, it is also housed

in the heated sampling box, with the elutriator end protruding through the sampling box, as illustrated in Figure 2.

[Note: Recent studies by the Harvard School of Public Health based on a comparison of utilizing a sampling box with and without heated enclosure indicated no difference in sampled species from winter samples. However, EPA recommends controlling the temperature in the sampling box to prevent condensation.]

6.1.12 Annular Denuder Transport Case. The transport case is made of formica backed with plywood and insulated. The corners are reinforced with metal. It is made to withstand shipping by truck, UPS, and Federal Express. Each case is stackable and lockable and has a carrying handle. Seven total annular denuder systems can be packed in the case.

6.1.13 Pump/Timer Unit. The pump/timer unit draws air through the ADS at a fixed rate of 10 L/min with a precision of ±10% over the range of 25-250 mm Hg vacuum. A mass flow controller or a differential flow controller can be used. Typically, the flow rate is monitored with an exhaust flow rotameter. The unit includes a mechanical 7-day timer and an elapsed-time counter. A dry gas meter, when available, is placed after the pump to give a direct readout of total volume of air sampled. Otherwise, flow rate is manually measured (using a rotameter) before and after each run to calculate the air volume sampled.

6.1.14 Dry Gas Meter (DGM). The DGM should have a capacity of 10 L of gas per revolution. (Fisher Scientific, 711 Forbes Ave., Pittsburgh, PA 15129, 412-787-6322).

6.1.15 Electronic Mass Flow Controller. This controller should be capable of maintaining a constant rate of 10 L/min (±10%) over a sampling period of up to 24 h and under conditions of changing temperature (5 - 43°C) and humidity. (Tylan General, Flow Division, 19220 S. Normandie Ave., Torrance, CA 90502, [213-212-5533], Model FC-262, or equivalent).

6.2 Analysis

6.2.1 pH Meter. A pH or pH/ion meter with "integral" automatic temperature compensation, temperature probe, 2 and 4 mL analytical vials, and calibrated with standard buffers (pH 4 and 7). The Ross semi-micro glass electrode from Orion has been used by the Harvard School of Public Health and found to adequately address the requirements of this protocol. (Orion Research Inc., The Schraffet Center, 529 Main Street, Boston, MA 02129, 617-242-3900).

6.2.2 Polyethylene Bottles with Polyethylene Screw Caps. 100 mL, used for storage of coating solution; and 1L, used for storing the KCl solution.

6.2.3 Erlenmeyer Flasks. 250 mL and 2 L borosilicate glass or polyethylene flasks for calibration, best source.

6.2.4 Graduated Cylinders. 5 mL, 10 mL, 100 mL, 250 mL, and 1L borosilicate glass or polyethylene cylinders, best source.

6.2.5 Pipets. Class A 5 mL and 10 mL borosilicate glass pipettes or automatic pipettes. Calibrated "*to deliver*," best source.

6.2.6 Pipet Bulb. Made of natural rubber. Recommended to meet OSHA requirements, best source.

6.2.7 Micropipettes. 25 μL, 50 μL, and 100 μL, calibrated "*to contain*," borosilicate glass micropipette, best source.

6.2.8 Forceps. Recommended dressing forceps made of stainless steel or chrome-plated steel and without serrations. Used for handling filter.

6.2.9 Stopwatch. Used for measuring flow rate of gas stream through DGM, best source.

6.2.10 Ultrasonic Cleaner. Used for filter extractions and parts cleaning. The ultrasonic cleaner should have temperature control capability. [Cole-Palmer Instrument Co., 7425 N. Oak Park Ave., Chicago, IL 60648 (800-323-4340)].

6.2.11 Clean Air Hood (Optional). Closed air hood with ammonia free air circulation. Used for Teflon® filter extraction for pH analysis, best source.

6.2.12 Glove-Box. Used for handling exposed filter, which is lined with citric acid impregnated paper sheets to maintain an ammonia-free atmosphere. Works best with a slight positive pressure.

6.2.13 Refrigerator. (approximately 5°C) is required for sample storage.

6.2.14 Polyethylene-Stoppered Volumetric Flasks. 25 mL, used for making sulfuric acid standards.

7. Reagents and Materials

7.1 Filter. Zefluor® (PTFE) membrane filter, 47 mm diameter, with a 2 μm pore size. The Teflon® filter has a coarse mesh Teflon® side and a fine pore membrane side. The fine pore membrane side should face the air stream. (Gelman Sciences, 600 S. Wagner Rd., Ann Arbor, MI 48106, Part No. P5PJ047, 800-521-1520).

7.2 Teflon® Membrane Filter, 47 mm Diameter, with a 2 μm Pore Size. Filter has a thin Teflon® membrane stretched across a plastic ring. (Gelman Sciences, 600 S. Wagner Rd., Ann Arbor, MI 48106, Part No. R2PJO47, 800-521-1520).

7.3 Filter Extract Storage Vials. 100 mL polyethylene vials (Nalgene or equivalent).

7.4 Labels. Adhesive for sample vials, best source.

7.5 Parafilm. Used for covering flasks and pH cups during pH analysis, best source.

7.6 Kimwipes® and Kay-dry Towels. Used for cleaning sampling apparatus and analysis equipment, best source.

7.7 Stoppers. Polyethylene, best source.

7.8 Sodium Carbonate (NA_2CO_3). ACS reagent grade, best source.

7.9 Citric Acid [Monohydrate - HOC (CH_2CO) OH]$_2$COOH : H_2O). ACS reagent grade, best source.

7.10 Methanol (CH_3OH). ACS reagent grade, best source.

7.11 Sulfuric Acid (H_2SO_4). ACS reagent grade, 1.000 N solution, best source.

7.12 Distilled Deionized Water (DDW). ASTM Type I water.

7.13 pH Buffers. Standard buffers, 4.00 and 7.00, for internal calibration of pH meter, best source.

7.14 Silica Gel. ACS reagent grade (indicating type), best source.

7.15 Gloves. Polyethylene disposable. Used for impactor frit assembly and filter assembly, best source.

7.16 Dow Corning High Temperature Vacuum Oil. Dow Corning 660 oil used for impactor frit coating solution, best source.

7.17 Zero Air. A supply of compressed clean air, free from particles and ammonia. The supply may be either from a commercial cylinder or generated on site, best source.

7.18 BRIJ-35. Composed of 0.1% of BRIJ-35 in DI water (Fisher Scientific, 711 Forbes Ave., Pittsburgh, PA 15129, 412-787-6322).

7.19 Perchloric Acid ($HClO_4$). 60-62%, in water, best source.

7.20 Toluene (C_7H_8). ACS reagent grade, best source.

7.21 Potassium Chloride (KCl). ACS reagent grade, best source.

7.22 Acetone (C_3H_60). ACS reagent grade, best source.

7.23 1% Glycerol (Glycerine -$CH_2OHCHOHCH_2OH$). ACS reagent grade, best source.

8. Preparation of Impactor Frit and Denuder Coating

8.1 Impactor Frit Coating Solution Preparation. Weigh 1 g of silicone oil (Dow Corning high temperature 660 oil) and place in a 100 mL polyethylene storage vial. Add 100 mL of toluene. Mix thoroughly, close container, and store at room temperature. (WARNING - FLAMMABLE LIQUID).

8.2 Annular Denuder Citric Acid Coating Solution. Clean a 100 mL polyethylene storage vial and let dry at room temperature. Measure 50 mL of methanol (WARNING - TOXIC, FLAMMABLE LIQUID) with a graduated cylinder and pour into vial. Weigh 0.5 g of citric acid and add to vial. Add enough glycerol to the vial to make a 1% solution. Mix thoroughly; cover and store at room temperature.

9. Impactor Frit Installation

9.1 Impactor Frit Installation

The impactor-coupler assembly shown in Figure 4 is composed of two parts: the replaceable impactor frit and the coupler-impactor housing seat. The impactor surface is a porous ceramic or porous stainless steel frit, 10 mm x 3 mm. Insert this frit into the coupler-impactor housing using the tools illustrated in

Figure 4. Press the impactor frit gently, but firmly, into the seat of the impactor housing with a clean, gloved finger. The impactor should fit into the housing so that it does not protrude above the seat. During sampling, particles accumulate on the impactor's plate surface. After each sampling event, clean the assembly to prevent the build-up of contaminants that may lead to loss of key acidic species being collected by the ADS. Cleaning involves immersing the elutriator, coupler-impactor, and frit in 0.1% BRIJ-35 cleaning solution and ultrasonicating for about 5 min. Rinse thoroughly with DDW for additional 5 min. Rinse and dry with zero air or in dust-fee environment and store with ends plugged and capped.

9.2 Impactor Frit Coating

With the impactor frit in the impactor seat of either the coupler (see Figure 5) or the Teflon® impactor seat support pin that fits into the first denuder, pipette 50 μL (about two drops) of the toluene-660 oil coating solution onto the impactor frit surface and allow to dry in a dust-free environment at room temperature. Cap both sides of the coupler impactor or denuder-impactor until use.

[Note: Only the minimum amount of oil should be on the frit because any excess will be blown off during sampling and will contaminate the surfaces of the first denuder.]

10. Filter Preparation and Assembly

[Note: A clean and dedicated indoor work space is required for the daily preparation, assembly and disassembly of the denuder and filter assembly. Approximately 2-3 m of bench space is adequate, with additional space for storing supplies.]

[Note: All loading and unloading of the filter assembly must be performed in an ammonia-free glove box. Generally, the filter assembly should be reloaded after cleaning, at the same time as unloading.]

10.1 With clean gloves, disassemble the filter assembly (see Figure 8) by unscrewing the large outer Delrin® collar (sleeve) from the aluminum filter housing outlet component.

[Note: Remove the polyethylene cap first. Lay the pieces out on clean Kimwipes® (see Figure 8).]

10.2 Lay a clean Teflon® filter ring housing, with its large opening face up, on a clean Kimwipe®. Place a clean stainless steel screen in the filter ring housing.

10.3 Using clean filter forceps, place a Teflon® filter on the screen.

[Note: If a Zefluor® Teflon® filter is used, be sure to place the membrane coated side, not the coarse side, toward the air stream. By observing the filter in the light, one can differentiate between the coarse and membrane side.]

10.4 Place the Teflon® filter housing inlet component (see Figure 8) on top of the Teflon® filter. This design forms a "sandwich" with the Teflon® filter held between the second filter ring housing and the housing inlet component. The housing inlet component connects the filter assembly to the annular

denuder through a thermoplastic coupler. Be careful not to twist the filter assembly components, or damage will occur to the filter.

10.5 Lay the aluminum filter housing outlet component, with its large opening face up, on a clean Kimwipe®.

10.6 Insert the filter ring sandwich with the filter housing inlet component extending upward. Place the larger outer Delrin® sleeve over the filter sandwich and screw onto the aluminum filter base. DO NOT OVERTIGHTEN!

10.7 Install the "quick-release" plug into the filter outlet component. Tighten the housing outlet to the Detrin® screw sleeve. DO NOT OVERTIGHTEN!

10.8 Install the polyethylene cap onto the filter inlet component and the orange dust cover onto the quick release plug. The filter assembly should be sealed tight before it is removed from the glove-box.

10.9 Leak-check the filter assembly is leak-checked according to Section 12.2.4.

11. Annular Denuder System Preparation

Clean all new annular denuder parts obtained from suppliers by placing them in a dilute BRIJ-35 solution. The parts should then be thoroughly rinsed in DDW, rinsed with acetone, and allowed to dry to room temperature. Store with end caps in place.

11.1 Coating Procedure

11.1.1 Cap one end of a denuder using Caplugs (which has the inner tube flush to the outer tube) and set the denuder upright on the capped end. For the denuder with flow-straighteners at both ends, either end may be capped. Measure 10 mL of the citric acid solution and pour into the denuder.

11.1.2 Cap the open end of the denuder and, holding it horizontally, rotate the denuder to distribute the coating solution evenly, wetting all surfaces.

11.1.3 Remove cap and decant excess coating solution into a 100 mL polyethylene bottle.

11.1.4 For the impactor denuder, the coating is performed without the impactor pin in place.

11.2 Drying Procedure

[Note: As denuders dry, they change from translucent to a frosted appearance. Denuders are dry when they become uniformly frosted.]

[Note: A supply of zero air is needed to dry the annular denuder tubes after applying the coating solutions. This air should be free of ammonia, moisture, and particles. Either a tank of pure air or an air purifier assembly can be used.]

11.2.1 Assemble the drying train and manifold as illustrated in Figure 7. Drying train and manifold clean air flow should be adjusted to 2-3 L/min through each denuder. Close toggle valve controlling clean air flow through manifold before attaching denuders.

11.2.2 Attach the flow-straightener end of the denuder to the drying manifold port (see Figure 7).

11.2.3 Open the toggle valve and allow clean air to flow through the denuder tube for 5 min. *Caution: Excess air flow will cause uneven coating to the tube walls.*

11.2.4 Close toggle valve and reverse ends of the denuder attached to the manifold. Start clean air flow again.

11.2.5 When an even frosted appearance is achieved, remove denuder from manifold, cap both ends with clean caps, and store until ready for use. Turn off air to drying manifold. Affix label indicating coating date on denuder.

11.3 Denuder System Assembly

[Note: Described herein is an annular denuder system consisting of one denuder. Extreme care should be exercised in handling and assembling of the ADS if the denuder is made of glass. The coupling of components must be effective to prevent leaks but, at the same time, not stress the glassware. Only patience and practice with the ADS will enable the operators to obtain optimum performance from the system with minimum breakage.]

The annular denuder system (ADS) assembly consists of (1) an inlet nozzle/impactor or cyclone assembly, (2) 1 glass or stainless steel annular denuder tube, and (3) a 1-stage filter assembly. The following procedure involves an inlet nozzle/impactor assembly.

11.3.1 Lay the ADS pieces on a clean surface (i.e., Kimwipes®).

11.3.2 Remove the end caps from the citric acid coated denuder. Gently insert the impactor support pin and coated frit assembly into the denuder-pin support.

11.3.3 Attach a thermoplastic coupler to the opposite denuder end. Place a Teflon® clad "O"-ring inside the coupler, if needed.

11.3.4 Attach the filter assembly inlet to the denuder coupler assembly. (The filter assembly has been previously loaded with a Teflon® filter. The components are assembled with plastic couplers.)

11.3.5 Attach the elutriator-acceleration jet assembly to the other end of the denuder. Tighten very gently. DO NOT OVERTIGHTEN.

11.3.6 Tighten the remaining couplers very gently.

11.3.7 Cap elutriator with orange dust cover until used. Attach "quick-release" tube to outlet of filter assembly.

11.4 Laboratory Leak-Check of ADS

Caution: Do not subject the system to sudden pressure changes or filter may tear.

11.4.1 Remove the orange dust cap from the impactor opening. Attach the "quick-release" outlet of the filter assembly to a pump module. Turn on the pump. Be certain that flow through the ADS occurs by checking the rotameter.

11.4.2 Briefly cap the elutriator with the orange dust cap. The flow, as indicated on the rotameter, should drop to zero if no leaks exist.

11.4.3 Disconnect the pump from the ADS at the "quick-release" plug. Cap the "quick-release" plug with an orange dust cover. Turn off the pump. REMEMBER -- Never overtighten joints or breakage

will result. If the joints cannot be sealed with gentle tightening, then the Teflon® "O"-rings are worn or defective and must be replaced.

11.4.4 Place the assembled sampler in its field-to-lab carrying case for transport to the field.

[Note: The ADS joints should be loosened slightly when extreme temperature changes are incurred during transportation. This procedure will prevent unnecessary breakage or distortion of the ADS components. Remember to allow the system to adjust to the outdoor air temperature before tightening the joints and checking for leaks.]

11.4.5 Before proceeding to the field, review the following checklist:

- Run IDs on the Field Test Data Sheet match labels affixed to the ADS components and filter assembly;
- Recessed ends of the denuder face the inlet;
- ADS ends are capped; and
- Transport case is secured firmly containing the ADS along with chain-of-custody and Field Test Data Sheet.

12. Sampling

12.1 Placement of Denuder System

12.1.1 The placement of the fine particle strong acidity aerosol monitor must conform to a consistent set of criteria and guidance to ensure data comparability and compatibility. A detailed set of monitor siting criteria for ambient air monitoring and meteorological programs is given in the EPA document *Ambient Monitoring Guidelines for Prevention of Significant Deterioration (PSD),* EPA-450/4-87-007, EPA Office of Air Quality Planning and Standards, Research Triangle Park, NC 27711, May 1987.

Because aerosol acidity is subject to rapid neutralization by ambient bases, the site must be away from localized sources of ammonia, such as composting and livestocking operations, landfills, sewage treatment plants, fertilizer plants and storage facilities, and recently plowed fertilized fields.

12.1.2 A summary of key factors that should be considered as part of the placement of an air quality monitoring station containing an ADS are:

- Vertical placement above ground;
- Horizontal spacing from obstructions and obstacles;
- Unrestricted air flow; and
- Adequate spacing from roads.

The ADS sampler is mounted on a supported mast pole or tripod. The ADS inlet should be located 2-3 m above ground level. Placing the inlet closer to ground level should be considered *only* if the surface is flat and man-made (i.e., not unpaved dirt).

12.1.3 A summary of key criteria associated with these siting factors for air monitoring stations is included in Table 1.0. The information included in the table should be used as part of the monitoring network design to ensure that the monitoring program provides representative and unbiased data. However, site-specific constraints could make it very difficult to meet all criteria. For example, wooded areas around a site would make the siting very difficult. The use of the information in Table 1.0, coupled

with a balanced evaluation by an experienced air quality and meteorology specialist, is highly recommended.

12.1.4 In general, for a site with no major obstruction and obstacles, the air sampler intake should be about 2-3 m aboveground. For a site with nearby roadways, however, intake placement should take into account the effects of road dust re-entrainment and vehicular emissions. In fact, a linear relationship should be established between the horizontal distance of the sampler intake from the roadway and the aboveground elevation of that intake. For any roadway accommodating more than 3,000 vehicles per day, the intake should be between 5 and 25 m from the edge of the nearest traffic lane. It should also be 15 m aboveground for a distance of 5 m from the nearest traffic lane and 2 m aboveground for a distance of 25 m from the nearest lane. For a roadway supporting less than 3,000 vehicles per day, the intake should be placed at a distance greater than 5 m from the edge of the nearest traffic lane and at a height of 2-15 m aboveground.

12.2 Start-Up

12.2.1 Remove the ADS from its field-to-lab carrying case and load into the field sampling box. Place the assembly in the box with the impactor extended outside the case. The ADS field sampling box is insulated and configured to hold the ADS without allowing movement. Chrome plated spring clips hold the denuder in place. Automatic and manual control switches allow the sampling box to control the temperature of the ADS. The automatic switch should be used when the ADS is not in use and when the ADS is sampling for extended periods of time without constant supervision to prevent low temperature or sudden pressure change exposure of the ADS (these types of exposure can cause leaks to occur, condensation, or the filter to tear). When sampling, the ADS should be kept 1°C above the outdoor temperature to prevent condensation.

12.2.2 Allow the pump to warm up for about 5 min prior to testing.

12.2.3 To check the Heat/Cool cycles, flip one switch from "AUTO" to "MANUAL" and the other between "COOL" and "HEAT." Check to insure that the fan and heater work, respectively.

12.2.4 With the elutriator still capped, turn on the pump with the switch on the timer. The rotameter should indicate zero flow. Run leak check for 5-10 s; then turn off pump and remove elutriator cap. Record leak rate on Field Test Data Sheet (see Figure 9). If there is a flow, refer to Section 12.4 for corrective action for leak test failure. The Field Test Data Sheet is used to keep track of the denuder tube, filter and impactors; it contains information such as when and by whom they are prepared, assembled, extracted and the installation data and time, run date, sampling period, pump flow rates, start and end times, and other data relevant to each run.

12.2.5 Attach a DGM output to the inlet of the annular denuder system. Turn on pump. Record start time on Field Test Data Sheet. Using a stopwatch, record the time for 20.0 L to pass through the DGM. Record the DGM temperature and the absolute pressure of the DGM.

12.2.6 Calculate the flow rate as follows:

$$Q_{std} = (V/T)(P_b/P_{std})(T_{std}/T_m)(F_c)$$

where:

Q_{std} = flow rate corrected to standard conditions, 25°C and 760 mm Hg, L/min.
V = volume of gas pulled through denuder system, L.
T = time required to pull gas through denuder system, minutes.

P_b = barometric pressure, mm Hg.
P_{std} = standard barometric pressure, 760 mm Hg.
T_{std} = standard temperature, 298°K.
T_m = temperature of dry gas meter, °K(= °C + 273).
F_c = dry gas meter correction factor, dimensionless.

12.2.7 If the calculated flow rate is not between 9.5 and 10.5 L/min, readjust the flow rate until the rate is in the above range. Stop the pump.

12.2.8 Record the flow rate on Field Test Data Sheet.

12.2.9 Remove DGM connection tubing from elutriator inlet. With all information correctly on the Field Test Data Sheet, start the pump and begin sampling. Periodically check system during sampling for constant flow rate.

12.3 Sample Shutdown

12.3.1 Attach DGM connection tubing to the elutriator inlet with pump still running. Measure flow rate. Record calculated flow rate, temperature, and pressure on Field Test Data Sheet.

12.3.2 Turn off the pump. Record time and elapsed time meter reading on Field Test Data Sheet. Remove DGM connection tubing from elutriator inlet. Remove ADS from the sampling box, cap the ends, and place the ADS in field-to-lab carrying case for transport to lab. Secure the latches on the transport case. Be careful not to stress the ADS during the transfer or breakage will result.

Caution: When the ADS is brought from a cold field sampling location to a warm laboratory, loosen the denuder couplings to prevent thermal expansion from breaking the denuder.

12.4 Corrective Action for Leak Test Failure

[Note: These steps should be followed when failure occurs during testing at the laboratory before transport to the field and in the field before sampling.]

12.4.1 Sampler Leaks. Note the problem on the Field Test Data Sheet. Check assembly of ADS components. Replace gaskets. Check for proper seating of denuder surfaces. Replace any defective parts.

12.4.2 Cracked or Chipped Denuder or Elutriator Assembly. Note problem on Field Test Data Sheet. Discard defective pieces. Do not try to extract cracked pieces.
WARNING: USE CAUTION WHEN DISASSEMBLING CRACKED GLASSWARE. PIECES MAY SHATTER AND CAUSE SEVERE CUTS. WEAR PROTECTIVE CLOTHING.

12.4.3 Flow Rate Disagreement. Note problem on Field Test Data Sheet. Check vacuum gauge on flow module. If a high vacuum exists, the sampler has become blocked. This blockage may be due to dust or smoke particles clogging the filter or to obstructions in the system or tubing. Check flow module. Repair as needed.

12.4.4 Inadequate Flow Rate. Note problem on Field Test Data Sheet. Check rotameter on flow controller. If adequate flow is shown here, a leak exists between the controller and the DGM. If no flow is shown on rotameter, check vacuum gauge on controller. If no vacuum exists, pump needs repair. If

a high vacuum is shown, an obstruction exists in the system. Check to see that the paper filter dividers were not accidentally installed with the filter in the filter assembly. Check tubing for kinks.

13. ADS Disassembly

13.1 In the laboratory, remove the ADS from the field-to-lab carrying case using both hands. To prevent stress, hold the ADS by its ends.
Caution: Do not stress the ADS while removing it from the case.

13.2 Decouple the elutriator-jet assembly from the first denuder-impactor-coupler assembly.

13.3 The impactor assembly and the denuders *will not* be extracted. However, begin each run with a clean impactor and charged denuder.

13.4 Handling the exposed Teflon® filter requires protection from contamination with NH_3, which rapidly neutralize aerosol acidity on the filter and bias the sample results. To ensure ammonia-free air occupies the glove-box, a positive pressure is maintained by blowing air through a PVC tube (4" O.D.) filled with glass-wool dosed with citric acid before entering the manifold which enables uniform distribution of air from top of the glove-box. Flow the ammonia-free air for 5 min before retrieving the filter. Place a citric acid soaked filter paper on the bottom to deplete ammonia when unused. Disassemble the filter assembly in the clean, ammonia-free glove-box. Clean all glove-box surfaces and utensils with methanol. Wearing clean gloves and using clean filter forceps, remove the filter and place in the 100 mL bottle, with the exposed filter surface facing downward. Label the bottle with appropriate information.

14. Extraction Procedure

14.1 Samples should be analyzed as soon after collection as possible. The solutions and extraction procedures must be prepared and performed on the day of pH analysis. Keep samples in a refrigerator until extracted and analyzed.

14.2 Samples should not be extracted until the day of analysis; however, if samples are extracted and it is not possible to analyze them that day, they should be refrigerated. Allow the samples to return to room temperature before analysis.

14.3 The same extract solution (ES) must be used for the samples to be analyzed, the working standards, and the EA solution. Also, the same batch of alcohol must be used to prepare the EA solution and the working standards and to extract the Teflon® filters.

14.4 Handling and extraction must take place in an ammonia-free glove box.

[Note: Teflon® is not wetted by water; therefore, the filter will float on top of an aqueous solution. The use of alcohol aids wetting. Also, all types of Teflon® curl to some extent. The analyst must ensure that the extraction solution makes complete contact with the particle deposit on the Teflon® filter during

extraction. A clean plastic (Teflon® or polyethylene) rod or tubing stub may be needed to hold the filter in better contact with the fluid during extraction.]

14.5 Teflon® Filter Extraction

14.5.1 Flush the glove-box with ammonia-free air for at least 5 min before proceeding.

14.5.2 Process the filters in the same order in which they will be analyzed.

14.5.3 Open the sample vial and pipet 0.2 mL methanol onto the filter.

14.5.4 As soon as the methanol has wet the entire surface of the filter, deliver 6.00 mL of ES solution into the vial. Cap the vial.

14.5.5 Put a batch of vials into the ultrasonic bath and sonicate for a total of 20 min, rotating the position of the vials 90° every 5 min.

14.6 Aliquot Preparation

14.6.1 Using a 1 mL automatic pipet, transfer 1 mL of the sample extract into each of two labeled 2 mL vials, one labeled A and the other labeled A1. Subsequent samples will be labeled B and B1, C and C1, etc.

14.6.2 Recap each vial after its aliquots are drawn. Store the original sample vials in a refrigerator for possible repeat analysis or for analysis of other components.

14.6.3 Proceed immediately with pH analysis.

15. pH ANALYSIS

15.1 Standard and Reagent Preparation

15.1.1 Standard H_2SO_4 Solution, 1.000 N

[Note: Each of the standard H_2SO_4 stock solutions must be prepared fresh the day of pH analysis.]

15.1.1.1 Label seven 25 mL polyethylene stoppered volumetric flasks. Also, label each flask with the volume of 1.000 N H_2SO_4 solution.

15.1.1.2 Use the 25 μL automatic pipet to add the 1 N stock H_2SO_4 solution to flasks 2 and 3. Use the 100 μL pipet to add 1.000 N stock H_2SO_4 solution to flasks 4 through 7. Dilute all flasks to the 25 mL mark with methanol. Cap with stoppers or parafilm and mix well. Proper dilution ratios are indicated in Table 2.

15.1.2 2 M Potassium Chloride (KCl) Solution

15.1.2.1 Weigh 149.2 ± 0.1 g of KCl. Add the KCl to a 2 L flask.

15.1.2.2 Add about 700 mL of DDW water to the flask. Swirl the solution until the KCl is completely dissolved.

15.1.2.3 Pour this mixture into a 1 L graduated cylinder. Rinse the flask with a small amount of DDW water and transfer the rinse into the cylinder. Fill the cylinder to the 1 L mark.

15.1.2.4 Pour the solution from the cylinder into the 1 L polyethylene bottle. Cap and shake the bottle to mix well. Mark the bottle with date of preparation.

15.1.3 0.100 N Perchloric Acid ($HClO_4$) Solution

15.1.3.1 Fill a 1 L graduated cylinder about half full with DDW. Transfer 10 ± 0.1 mL of 60-62% $HClO_4$ into the 1 L cylinder with a 10 mL pipet.

15.1.3.2 Fill the cylinder to the 1 L mark. Pour the solution into the 1 L polyethylene bottle.

15.1.3.3 Cap and shake the bottle to mix well. Mark the date of preparation on the bottle.

15.1.4 0.010 N $HClO_4$ Solution

15.1.4.1 Fill a 1 L graduated cylinder about 1/2 full with DDW.

15.1.4.2 Measure 100 mL of the 0.1 N $HClO_4$ solution with the 100 mL graduated cylinder. Add this to the 1 L cylinder.

15.1.4.3 Fill the 1 L cylinder with DDW to the 1 L mark. Pour the solution into the 1 L polyethylene bottle.

15.1.4.4 Cap and shake the bottle to mix well. Mark the date of preparation on the bottle.

15.1.5 Extraction Solution (ES)

[Note: This solution must be prepared fresh on the day of pH analysis.]

15.1.5.1 Measure 20 ± 0.5 mL of 2 M KCl into 2 L erlenmeyer flask.

15.1.5.2 Using a 5 mL calibrated automatic pipet, add 10 ± 0.1 mL of 0.01 N perchloric acid ($HClO_4$), to the flask. Add 980 ± 10 mL of DDW to the flask.

15.1.5.3 Mix well and cover with parafilm until ready for use.

15.1.6 Extraction Solution with methanol (EA Solution)

15.1.6.1 Measure 150 ± 2 mL of ES (prepared in Section 15.1.5) into a 250 mL graduated cylinder. Transfer to a 250 mL erlenmeyer flask.

15.1.6.2 Using a 5 mL graduated cylinder, add 5 ± 0.1 mL of methanol (from the same fresh bottle of methanol that was used to prepare the standards in Section 15.1.1) to the flask.

15.1.6.3 Mix well and cover with parafilm until ready for use. (pH of the EA solution should be 4.09 ± 0.04. If not, the solution must be reprepared.)

15.1.7 Working Standard Test Solutions

15.1.7.1 Place fourteen-4 mL polystyrene sample vials (as used with Technicon Auto-Analyzer II system) labeled 1A, 1B, 2A 2B...7A, 7B into support racks. Using the calibrated dispensing pipet bottle, add 3 mL of ES solution to each 4 mL vial.

15.1.7.2 Using the displacement pipet, add 50 μL of methanol to each vial. Pour about 3 mL of Standard Flask #1 H_2SO_4 standard (see Section 15.1.1) into a labeled 4 mL vial.

15.1.7.3 Immediately pipet 50 μL of this standard into the 4 mL vials labeled 1A and 1B containing the ES solution and methanol.

[Note: This transfer must be done without delay to prevent the standard concentration from increasing significantly due to evaporation of the methanol solvent.]

15.1.7.4 Repeat the procedure for each of the other 6 standards. If there is a delay of more than 5 min between the preparation of these mixtures and the next step, put caps on the 4 mL vials.

[Note: There should be 14 vials, each containing 3 mL of ES solution, 50 μL of methanol, and 50 μL of Standard H_2SO_4 solution (see Section 15.1.1). Two aliquots from each vial (1A, 1B, 2A, 2B, 3A, 3B,...7A, 7B) will be analyzed.]

15.1.7.5 Place vial 1A in a rack. In a second rack place two-2 mL vials labeled 1A1 and 1A2. Use the 1 mL automatic pipet to mix the contents of vial 1A by drawing 1 mL into the pipet tip and then dispensing it back into the vial three times. Then use the same pipet to transfer 1 mL of the contents of vial 1A to each of the two labeled (1A1,1A2) 2 mL vials. Place caps on the vials. After transferring the two aliquots, rinse the automatic pipet tip in a flask of DDW. Repeat the transfer procedure for each of the other working standard pairs. (1B aliquot into vials 1B1 and 1B2, 2A aliquot into vials 2A1 and 2A2, etc.). These are the working standards.

15.2 Calibration of pH Meter

The pH meter requires temperature calibration whenever a new electrode is used. Use the manufacturer's procedure in the instrument manual. This calibration should be repeated every 3 months when not in use. The pH meter is left with the power cord plugged into the AC outlet, the mode control knob is left in the standby position, and the combination electrode is immersed in a 4 M KCl solution (a slit rubber stopper seals the bottle with the electrode in it). Keep a record of the temperature calibrations in a lab notebook.

15.3 Pre-Analysis Calibration

[Note: The steps for proper calibration and set-up for analysis of the Teflon® filter sample for pH determination are outlined in Figure 10. Analysis should be performed at room temperature.]

[Note: The pH buffer solutions are not used for any quantitative purpose. They are used to standardize the electrodes and as a diagnostic to verify that the pH measurement system is working as expected before beginning analysis of the samples.]

15.3.1 Use a pH Analytical Laboratory Log Form (see Figure 11) to record all data.

15.3.2 Fill three 4 mL vials with pH 7 buffer. Withdraw the electrode from the 4 M KCl bottle and wipe the tip gently with a Kimwipe® to remove the bulk of the solution. Rinse the electrode with one vial of pH 7 buffer. Do not test pH of the first vial.

15.3.3 Immerse the electrode in the second vial of the pH 7 buffer. Use a small bottle or other support to hold the vial up to the electrode while waiting for the meter reading to equilibrate.

15.3.4 Test the pH by turning to the pH mode of the meter. Allow the reading to stabilize for at least 30 s. Record the result on the Analytical Laboratory Log Form for pH 7, entry 2.

15.3.5 Turn to standby mode and test the last vial of pH 7 buffer. Record the results on the log form for pH 7, entry 3. If the pH value for the 2nd cup is not 7.00 $\pm$ 0.01, adjust the "calib." knob to obtain a reading of 7.00. Note this adjustment on the log form.

15.3.6 Fill three 4 mL vials with pH 4 buffer. With the meter in the standby mode, remove the cup containing pH 7 buffer, wipe the tip of the electrode gently with a Kimwipe®, and then rinse the electrode with the first vial of pH 4 buffer. Do not record pH.

15.3.7 Test the next two vials of pH 4 buffer as above, recording the results on the log form. If the pH value for the third vial is not 4.00 $\pm$ 0.01, adjust the "slope" knob to get a reading of 4.00. If the value for the second vial was not 4.00 $\pm$ 0.01, the calibrations at pH 7 and at pH 4 must both be repeated.

15.4 pH Test of $HClO_4$ Solutions

[Note: The 0.01 N $HClO_4$ solution is used to prepare the ES solution, which is used to prepare the EA solution. The pH value for the EA solution must be 4.09 ± 0.04. If this pH value is not achieved, or more of the $HClO_4$ solutions must be reprepared.]

15.4.1 Finish the calibration of the pH meter with pH 4 buffer.

15.4.2 Rinse the pH electrode with DDW. Wipe the tip of the electrode with a Kimwipe®.

15.4.3 Fill three 4 mL vials with EA solution. Measure the pH of the test EA solution in similar fashion to the buffer solutions. The values must be 4.09 ± 0.04.

15.4.4 If the above pH values are not achieved, follow Section 15.1.6 to reprepare the solutions. Test the pH of the new solutions. Repeat as necessary to obtain an average pH of 4.09 ± 0.04.

15.4.5 Leave the electrode immersed in the "3rd vial" with the meter in the standby mode until ready to start analysis of the working standards.

15.5 Analysis of Working Standard

[Note: Immediately following the EA analysis, start testing the working standards.]

15.5.1 With the pH meter still in the standby mode, remove the last vial from the electrode, gently wipe the tip with a Kimwipe®, and immerse the electrode into the working standard vial 1A1.

[Note: Only two vials are available for each working standard (also for filter extracts). Thus, pH measurement is made for both of the two vials for each sample. Also, the electrode tip is not wiped between the 1st and 2nd vials of each sample.]

15.5.2 After testing the pH of vial 1A1, test vial 1A2. Record the results of both on the Analytical Laboratory Log Form.

15.5.3 With the meter in the stand-by mode, remove vial 1A2, wipe the electrode with a Kimwipe® and test one 2 mL vial of EA solution.

15.5.4 Test a 2nd vial of EA solution; record the results on the log form. Discard the 1st vial of EA, but retain the 2nd vial to be used as the 1st vial for the next EA test.

15.5.5 Mean pH value for the EA solutions should be 4.09 ± 0.04. If the above pH values are not achieved, follow Section 15.1.6 to reprepare the EA solution. Retest. If still outside range, investigate the problem with the probe and review previous recorded pH data for samples and EA solutions to determine validity of measurements.

15.5.6 Continue testing the remainder of the working standards, 1B1, 1B2, 2A1, 2A2, 2B1, 2B2, ...7B1, 7B2. Remember to wipe the electrode tip both before and after each pair of test solutions, but not in between two vials of the same sample.

[Note: If there is trouble in obtaining constant pH values, a magnetic stirrer may be used to keep the contents to be measured uniform. If employed, ensure that the sample vials are insulated from any temperature increase of the stirring platform that may occur during extended use.]

15.5.7 Use the mode control knob in the "temp." position to measure the temperature of the test solutions every 5-10 samples and record the results on the Analytical Laboratory Log Form.

15.6 Analysis of Filter Extracts

After measuring the pH of the working standards, measure the pH of the filter extract and record on the Analytical Laboratory Log Form. After ten filter extracts have been tested, make an additional test with the EA solution and record temperature. At the end make a final test of pH 4 buffer. If not 4.00 ± 0.04, perform a new calibration; the laboratory manager must then decide (and document) how to reduce the unknowns based on pre- and post-calibrations. Criteria and corrective action should be met according to Section 15.5.5. Follow manufacturer's directions for shut-down of pH meter. Immerse the electrode tip in the bottle of 4 M KCl.

16. Assumption of Annual Denuder System

16.1 Measuring acid aerosol requires that ammonia be eliminated from the sample stream to prevent inaccurate measurement of the acid aerosol, thus biasing the results. To address this issue, a citric acid coated denuder to remove (denuder) ammonia from the gas stream is positioned in front of the filter assembly where strong acid aerosols are collected. The efficiency of the citric acid denuder to remove NH_3 is assumed to be 100%.

16.2 The efficiency of the impactor collection system decreases with increased particulate loading. The average operational time before such loading occurs has not been determined. Likewise, the removal efficiency of the denuders have not been fully explored. Therefore, both the impactor and denuders are removed after each sampling event and replaced with new components.

16.3 Other assumptions associated with the performance of the annular denuder system for validity of the calculations presented in Section 17 are:

- All alkaline particles (> 2.5 μm) are removed at the sampler inlet;
- The cyclone or elutriator/impactor assembly have DP_{50} cut size of 2.5 μm;
- The citric acid coated-denuder removes 100% of ammonia from the gas sample stream;
- Fine (<2.5 μm) acid (H_2SO_4) aerosol losses in the denuder are less than 1%;
- The Teflon® filter is 100% efficient in collecting fine acid aerosols; and
- The molar ratio of NH_4NO_3 to H_2SO_4 is assumed to be less than 10%. However, if NH_4NO_3 is captured on the Teflon® filter, its dissociation during sampling may occur, thus affecting acidity measurements. This user is responsible for determining what is and is not a "significant" molar ratio of NH_4NO_3 to H_2SO_4.

17. Atmospheric Species Concentration Calculations

17.1 Calculations Using Results from pH Measurement

17.1.1 A convenient method of expressing concentration of the hydrogen ion was first proposed by Sorensen in 1909 and has been widely adopted by chemists.

$$pH = -\log [H^+]$$
$$[H^+] = 10^{-pH}$$

17.1.2 For each working standard on a given analytical day, calculate the "apparent net strong acid concentration" as follows:

$$C_i = 10^{-pHWS_i} - 10^{-pHEA}$$

where:

C_i = apparent net strong acid concentration, molar.
$pHWS_i$ = measured mean pH of a working standard.
pHEA = measured mean pH of the EA solution.

17.1.3 For each analytical day, utilizing a particular set of freshly prepared daily working standards, develop a standard curve by calculating the linear regression of C_i vs. C_{eq}, as documented in Section 15.1.2.4. Calculate slope and intercept of the standard curve.

17.1.4 Calculate the corresponding "apparent net strong acid concentration" from the sample pH using the following equation:

$$C_s = 10^{-pHS} - 10^{-pHEA}$$

where:

C_s = apparent net strong acid concentration for unknown sample, molar.
pHS = measured pH of the sample (S).
pHEA = measured pH of the EA solution.

17.1.5 Utilizing the slope and intercept of the standard curve, calculate equivalent mass of strong acid:

$$C_f = [\text{Intercept}] + [C_s]\,[\text{Slope}]$$

where:

C_f = apparent net strong acid mass, μg, as calculated from standard curve.
Intercept = calculated relationship from linear regression analysis of C_i vs. C_{Eq}.
Slope = calculated relationship from linear regression analysis of C_i vs. C_{Eq}.

17.2 Calculation of Air Volume Sampled, Corrected to Standard Conditions

17.2.1 The actual sample air value, V, for each sample is calculated using the data from the Field Test Data Sheet. These data include the initial and final elapsed times, the initial rotameter reading, and the rotameter I.D. No. Use the calibration curve for the given rotameter to calculate the flow for the sample, in LPM, if applicable. Calculate the value of V as follows:

$$V_s = [F]\,[T]$$

where:

F = flow from the calibration curve, L per minute.
T = net elapsed time, min.
V_s = total sample volume, L.

17.2.2 Convert L to m^3 by:

$$V_s = V \times (10^{-3})$$

where:

V_s = total sampling volume, m^3.
10^{-3} = conversion factor, m^3/L.

17.2.3 Calculate the air volume sampled, corrected to EPA-reference conditions:

$$V_{s_{std}} = V_s Y \left(\frac{T_{std}}{T_m}\right)\left(\frac{P_{bar}}{P_{std}}\right)$$

where:

$V_{s_{std}}$ = volume of sample at EPA-reference conditions, m^3.
V_s = volume of gas sample through the dry gas meter, or calculated volume sampled as indicated by rotameter (see Section 17.2.1), m^3.
T_{std} = absolute EPA-reference temperature, 298°K.
T_m = average flowmeter or dry gas meter temperature, °K.
P_{bar} = barometric pressure of flow or volume measurement condition, mm Hg.
P_{std} = EPA-reference barometric pressure, 760 mm Hg.
Y = dry gas meter calibration factor (if applicable), dimensionless.

17.3 Calculation of Strong Acidity Aerosol Concentration

17.3.1 Calculate the final concentration of apparent net fine particle (<2.5 μm) strong acidity (as H_2SO_4):

$$C_{H^+} = C_f / V_{s_{std}}$$

where:

C_{H^+} = apparent net fine particle strong acidity concentration, $\mu g/m^3$.

C_f = apparent net strong acid, μg, as calculated from standard curve.

$V_{s_{std}}$ = volume of sampled gas at EPA-reference conditions (see Section 17.2.3), m^3.

18. Method Safety

This procedure may involve hazardous materials, operations, and equipment. This method does not purport to address all of the safety problems associated with its use. The user must establish appropriate safety and health practices to determine the applicability of regulatory limitations prior to the implementation of this procedure. These precautions should be part of the user's SOP manual.

19. Performance Criteria and QA

Required quality assurance measures and guidance concerning performance criteria that should be achieved within each laboratory are summarized and provided in the following section.

19.1 Standard Operating Procedures (SOPs)

19.1.1 SOPs should be generated by the users to describe and document the following activities in their laboratory: (1) assembly, calibration, leak check, and operation of the specific sampling system and equipment used; (2) preparation, storage, shipment, and handling of the sampler system; (3) purchase, certification, and transport of standard reference materials; and (4) all aspects of data recording and processing, including lists of computer hardware and software used.

19.1.2 Specific instructions should be provided in the SOPs and should be readily available to and understood by the personnel conducting the monitoring work.

19.2 QA Program

The user should develop, implement, and maintain a quality assurance program to ensure that the sampling system is operating properly and collecting accurate data. Established calibration, operation, and maintenance procedures should be conducted regularly and should be part of the QA program. Additional QA measures (e.g., trouble shooting) and further guidance in maintaining the sampling system are provided by the manufacturer. For detailed guidance in setting up a quality assurance program, the user is referred to the *Code of Federal Regulations* (see Section 20, Citation 11) and the *EPA Handbook on Quality Assurance* (see Section 20, Citation 12).

20. References

1. Waldman, J. M., *Operations Manual for the Annular Denuder System Used in the USEPA/RIVM Atmospheric Acidity Study*, UMPNJ - Robert Wood Johnson Medical School, Piscataway, NJ, August 28, 1987.

2. American Chemical Society Subcommittee on Environmental Chemistry, "Guidelines for Data Acquisition and Data Quality Evaluation in Environmental Chemistry," *Analytical Chemistry*, Vol. 52:2242-2249, 1980.

3. Sickles, II, J. E., *Sampling and Analytical Methods Development for Dry Deposition Monitoring*, Research Triangle Institute Report No. RTI/2823/00-15F, Research Triangle Institute, Research Triangle Park, NC, July 1987.

4. Forrest, J., and Newman, L., "Sampling and Analysis of Atmospheric Sulfur Compounds for Isotopic Ratio Studies," *Atmos. Environ.*, Vol. 7:562-573, 1973.

5. Stevens, R. K., et al., "Inlets, Denuders and Filter Packs to Measure Acidic Inorganic Pollutants in the Atmosphere," Abstract for ACGIH Symposium: *On Adran COS in Air Sampling*, Asilomar Conference Center, Pacific Grove, CA, February 16, 1986.

6. Appel B. R., Povard V., and Kothney E. L., "Loss of nitric acid within inlet devices for Atmospheric Sampling," Paper presented at 1987 EPA/APCA Symposium: *Measurement of Toxic and Related Air Pollutants*, Research Triangle Park, NC, May 3-6, 1987.

7. Braman R. S., Shelley T. J., and McClenny W. A., "Tungstic Acid for Preconcentration and Determination of Gaseous and Particulate Ammonia and Nitric Acid in Ambient Air," *Analyt. Chem.*, Vol. 54:358-364, 1983.

8. Ferm, M., *Concentration Measurements and Equilibrium Studies of Ammonium, Nitrate and Sulphur Species in Air and Precipitation*, Doctoral Thesis, Department of Inorganic Chemistry, Goteborg University, Goteborg, Sweden, 1986.

9. Ferm, M., and Sjodin A., "A Sodium Carbonate Coated Denuder for Determination of Nitrous Acid in the Atmosphere," *Atmos. Environ.*, Vol. 19:979-985, 1985.

10. Stevens, R. K., and Rickman, E., Jr., "Research Protocol/Method for Ambient Air Sampling with Annular Denuder Systems," prepared for Environmental Protection Agency, Atmospheric Chemistry and Physics Division, Office of Research and Development, Research Triangle Park, NC, ASRL-ACPD-RPM 003, January 1988.

11. 40 CFR Part 58, Appendix A, B.

12. *Quality Assurance Handbook for Air Pollution Measurement Systems, Volume II - Ambient Air Specific Methods*, EPA 600/4-77-0272, May 1972.

13. Bolleter, C.J., Bushwan, and Tidwell, P.W. "Spectrophotometric Determination of Ammonia as Indophenol," *Anal. Chem.*, Vol. 33:592-594.

14. Harwood, J.E. and Kuhn, A.L., "A Colorimetric Method for Ammonia in Natural Water," *Water Res.*, Vol. 4:8055-811, 1970.

15. Koutrakis, P., Wolfson, J.M., Slater, J.L., Brauer, M., Spengler, J.D., Stevens, R.K., and Stone, C.L., "Evaluation of an Annular Denuder/Filter Pack System to Collect Acidic Aerosols and Gases," *Environ. Sci. & Tech.*, Vol. 22:1463-1468, 1988.

16. Mann, L.T., Jr., "Spectrophotometric Determination of Nitrogen in Total Micro-kjedahl Digests," *Anal. Chem.*, Vol. 35:2179-2182, 1963.

17. Possanzini, M., Febo, A., and Liberti, A., "New Design of a High-performance Denuder for the Sampling of Atmospheric Pollutants," *Atmos. Environ.*, Vol. 17:2605-2610, 1983.

18. Stevens, R.K., and Rickman, E.E., *Research Protocol/Method for Ambient Air Sampling with Annular Denuder Systems*, Report ASRL-ACPD-RPM 003, EPA, Research Triangle Park, NC, January 1988.

19. Koutrakis, P., Wolfson, J.M., and Spengler, J.D., "An Improved Method for Measuring Aerosol Strong Acidity: Results from a Nine-Month Study in St. Louis, Missouri and Kingston, Tennessee," *Atmospheric Environment*, Vol. 22:157-162, 1988.

20. Brauer, M., Koutrakis, P., Wolfson, J.M., and Spengler, J.D., "Evaluation of the Gas Collection of an Annular Denuder System Under Simulated Atmospheric Conditions," *Atmosperhic Environment*, Vol 23:1981-1986, 1989.

21. Koutrakis, P., Wolfson, J.M., Brauer, M., and Spengler, J.D., "Design of a Glass Impactor For an Annual Denuder/Filter Pack System," *Aeros. Sci., and Techn.*, Vol. 12:607-612, 1990.

22. Sjödin A. and Ferm, M., "Measurements of Nitrous Acid In An Urban Area," *Atmospheric Environment*, Vol. 19:985-992, 1985.

23. Vossler, T.L., Stevens, R.K., Paur, R.J., Baumgardner, R.E., and Bell, J.P., "Evaluation of Improved Inlets and Annular Denuder Systems to Measure Inorganic Air Pollutants," *Atmos. Environ.* Vol. 22:1729-1736, 1988.

24. *Technical Assistance Document for Sampling and Analysis of Toxic Organic Compounds in Ambient Air*, EPA-600/8-90-005, Environmental Protection Agency, Research Triangle Park, NC, 1990.

25. Winberry, W. T., Jr., *Determination of the Strong Acidity of Atmospheric Fine-Particles (<2.5 μm) Using Annular Denuder Technology*, EPA Publication EPA-600/R-93-D37, November 1992.

TABLE 1. SUMMARY OF KEY PROBE SITING CRITERIA FOR ACID AEROSOL MONITORING STATIONS

Factor	Criteria
Vertical spacing above ground	• Representative of the breathing zone and avoiding effects of obstruction, obstacles, and roadway traffic. Height of probe intake above ground in general, 2-3 m above ground and 2-15 m above ground in the case of nearby roadways. • About 1 m or more above the structure where the sampler is located.
Horizontal spacing from obstruction and obstacles	• Minimum horizontal separation from obstructions such as trees is >20 m from the dripline and 10 m from the dripline when the trees act as an obstruction. • Distance from sampler inlet to an obstacle such as a building must be at least twice the height the obstacle protrudes above the sampler. • If a sampler is located on a roof or other structures, there must be a minimum of 2 m separation from walls, parapets, penthouses, etc. • There must be sufficient separation between the sampler and a furnace or incinerator flue. The separation distance depends on the height and the nature of the emissions involved.
Unrestricted airflow	• Unrestricted airflow must exist in an arc of at least 270° around the sampler, and the predominant wind direction for the monitoring period must be included in the 270° arc.
Spacing from roads	• A sufficient separation must exist between the sampler and nearby roadways to avoid the effect of dust re-entrainment and vehicular emissions on the measured air concentrations. • Sampler should be placed at a distance of 5-25 m from the edge of the nearest traffic lane on the roadway depending on the vertical placement of the sampler inlet which could be 2-15 m above ground.

TABLE 2. DILUTION RATIOS

Standard H_2SO_4 flask	Volume of 1.000 N H_2SO_4 added to each flask, (μL)	Working standard concentration, 10^{-3}N H_2SO_4	Equivalent strong acid mass collected on filter (C_{Eq}), μg[a]	Approximate pH
1	0	0	0	4.09
2	25	1	4.90	4.01
3	50	2	9.80	3.95
4	100	4	19.60	3.84
5	200	8	39.20	3.68
6	400	16	78.40	3.48
7	800	32	156.80	3.23

[a]Based on 6.2 mL extraction volume.

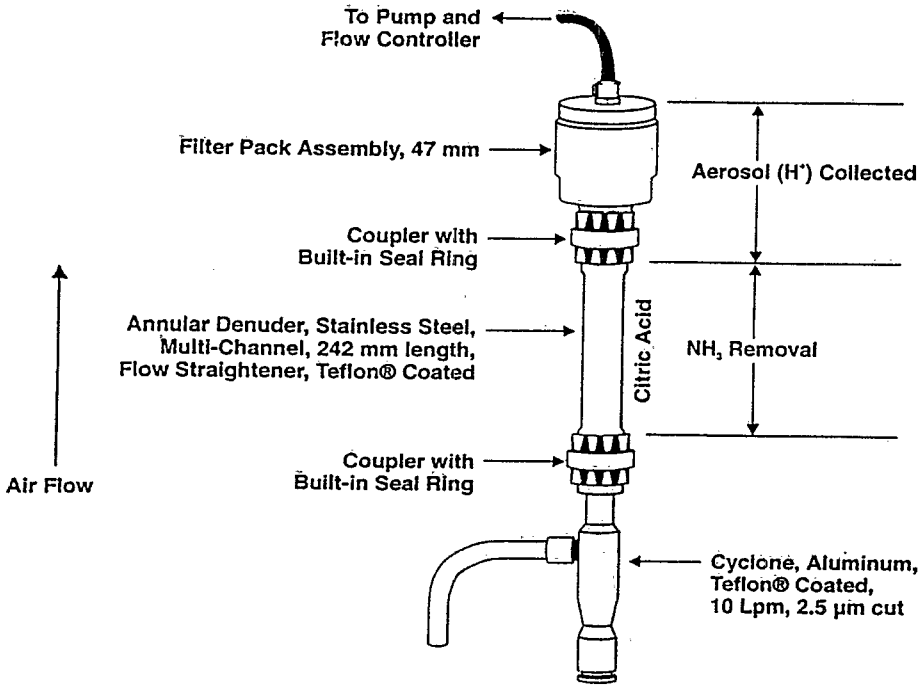

Figure 1a. Annular Denuder System (ADS) with Cyclone.

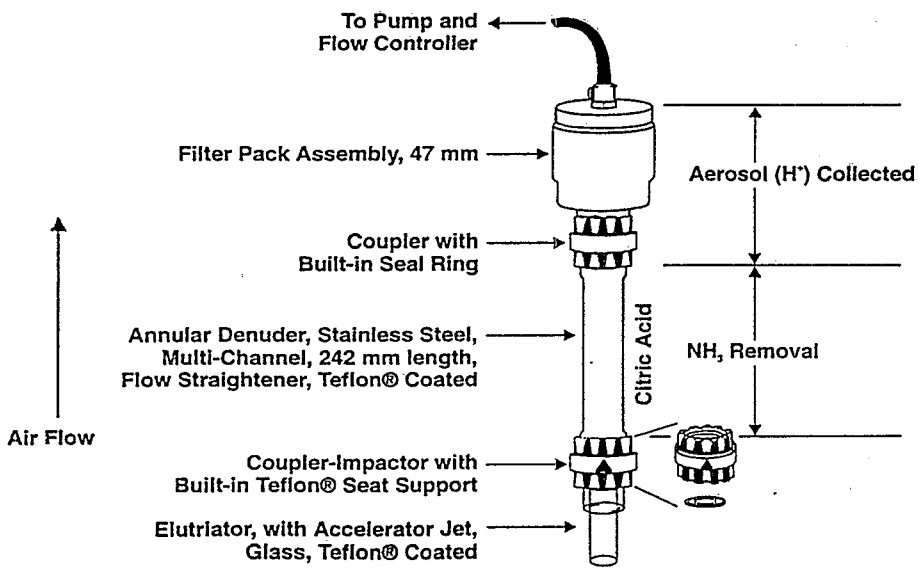

Figure 1b. Annular Denuder System With Impactor Assembly.

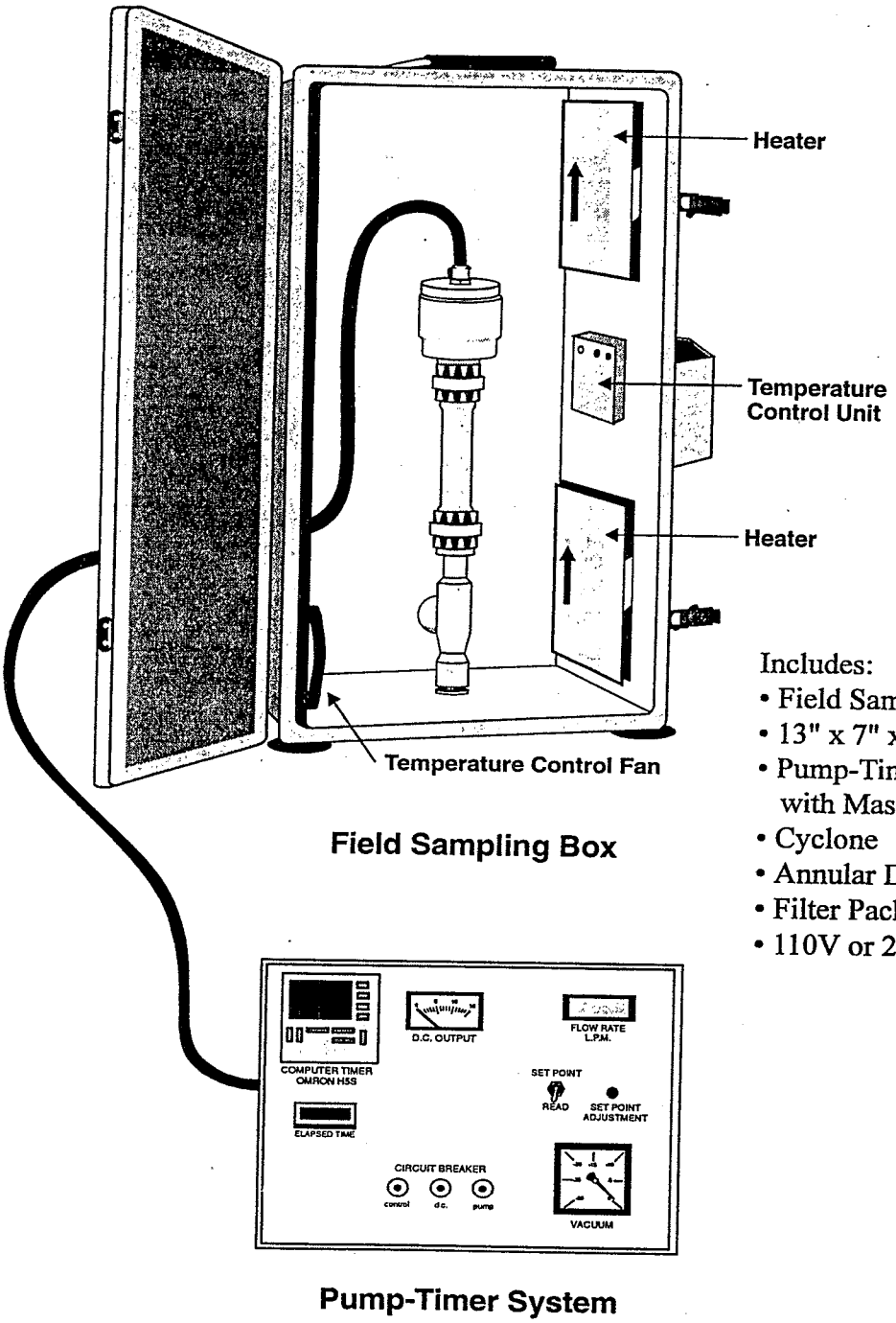

Includes:

- Field Sampling Box
- 13" x 7" x 28" Heated and Cooled
- Pump-Timer System, Single Channel with Mass Flow Controller
- Cyclone
- Annular Denuder
- Filter Pack
- 110V or 220V

Figure 2. Annular Denuder System in Field Sampling Box With Pump-timer System.

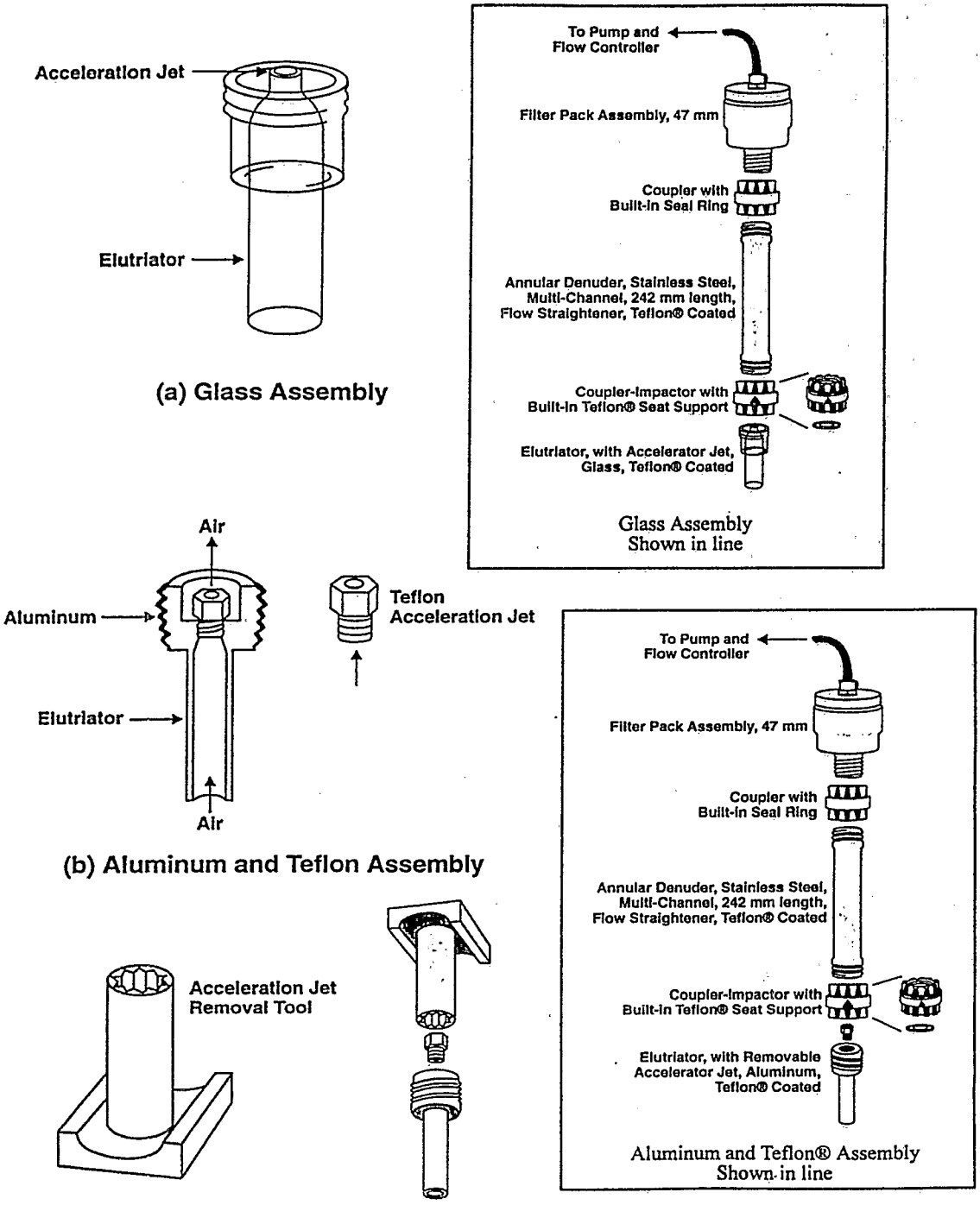

Figure 3. Available Elutriator and Acceleration Jet Assemblies.

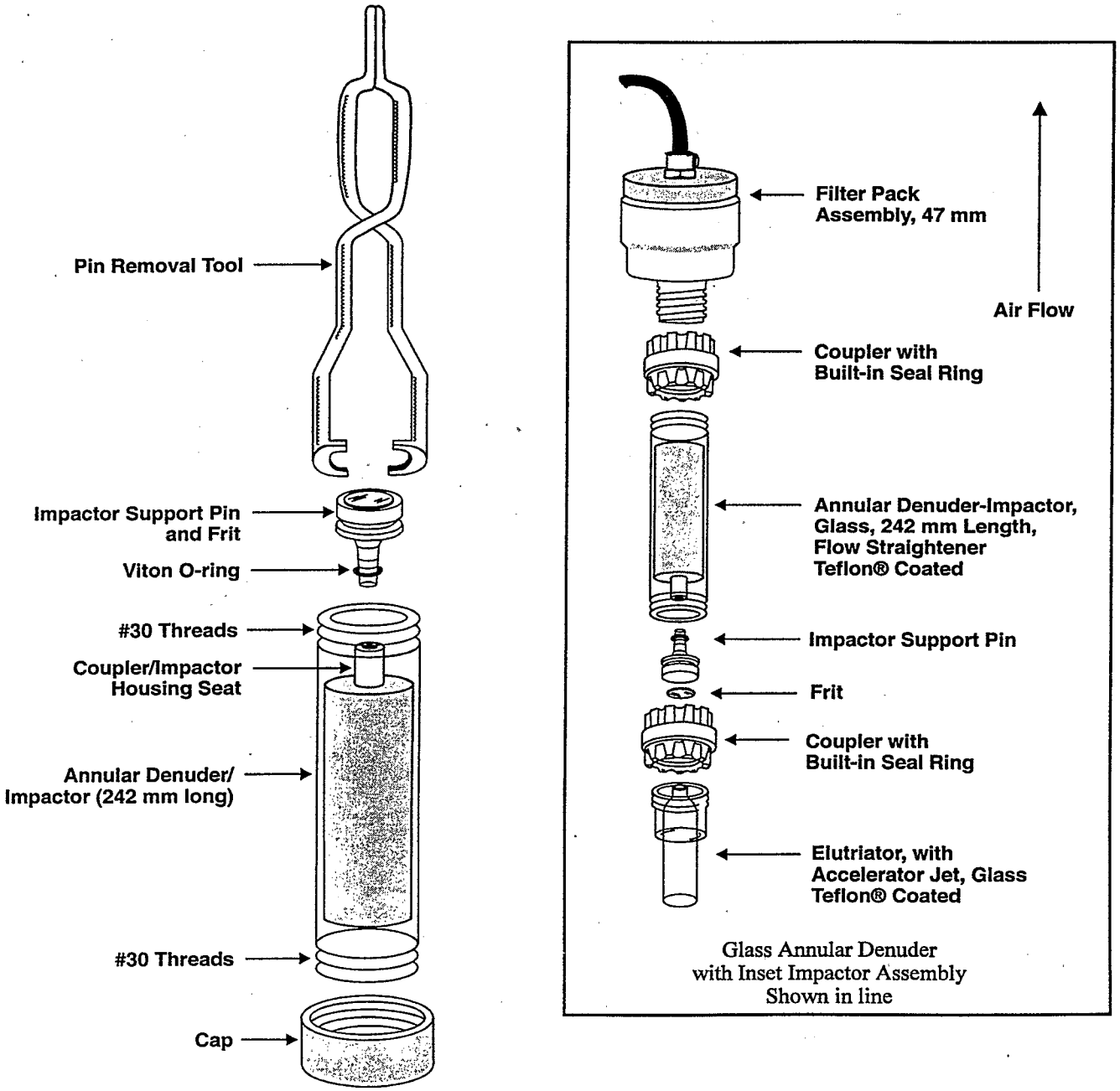

Figure 4. Glass Annular Denuder With Inset Impactor Assembly.

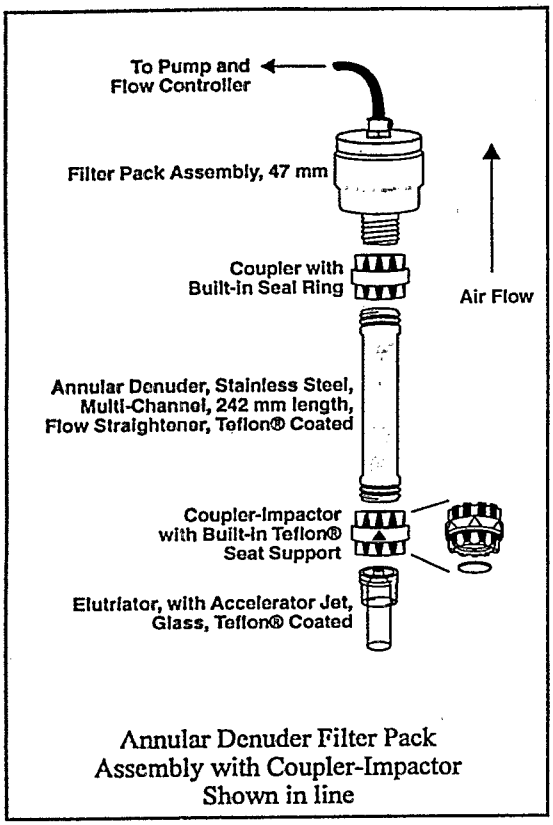

Annular Denuder Filter Pack Assembly with Coupler-Impactor Shown in line

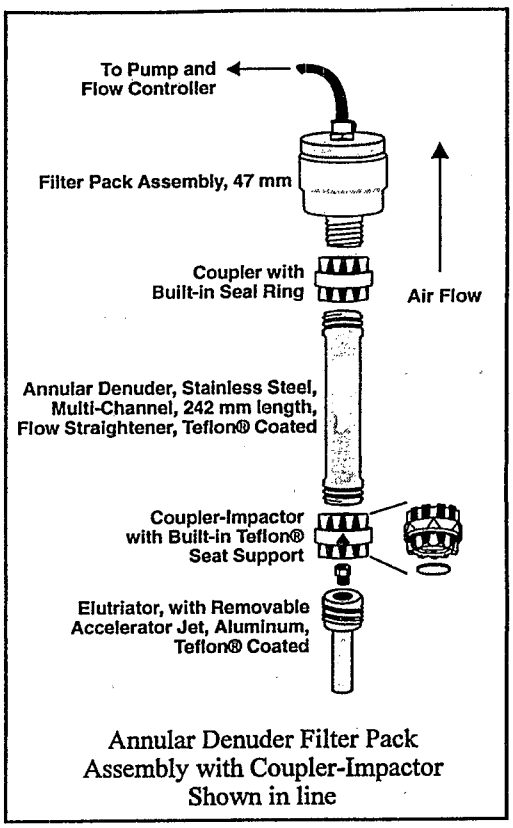

Annular Denuder Filter Pack Assembly with Coupler-Impactor Shown in line

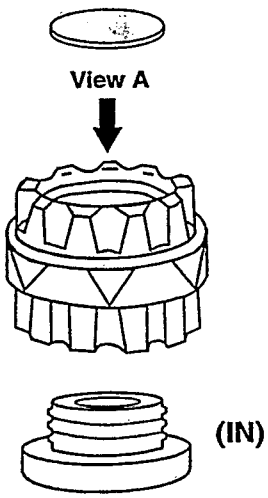

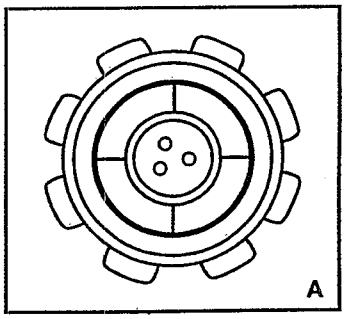

Teflon Seat Support
Side View

Figure 5. Side View Impactor/Coupler Assembly.

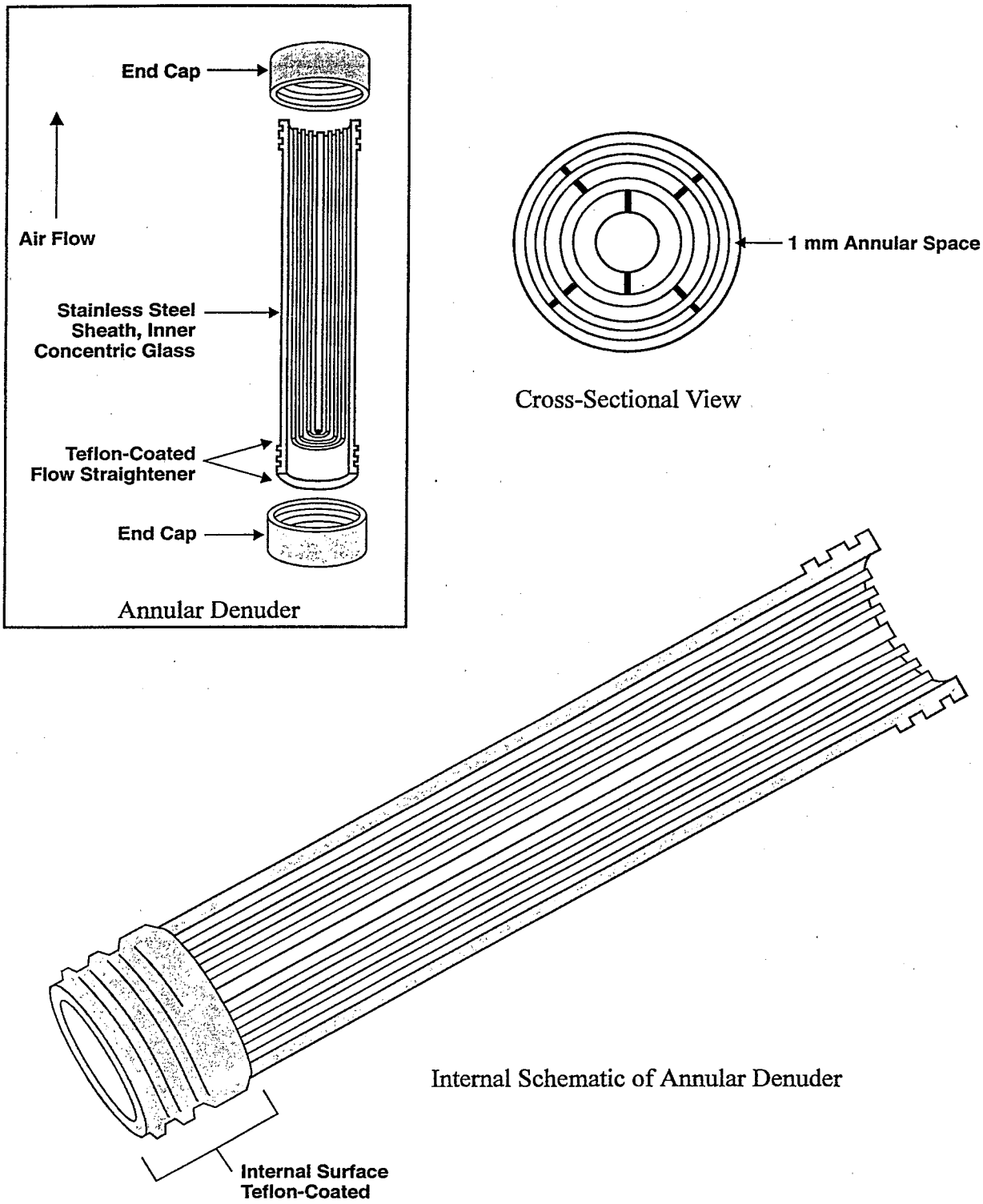

Figure 6. Internal Schematic of Annular Denuder.

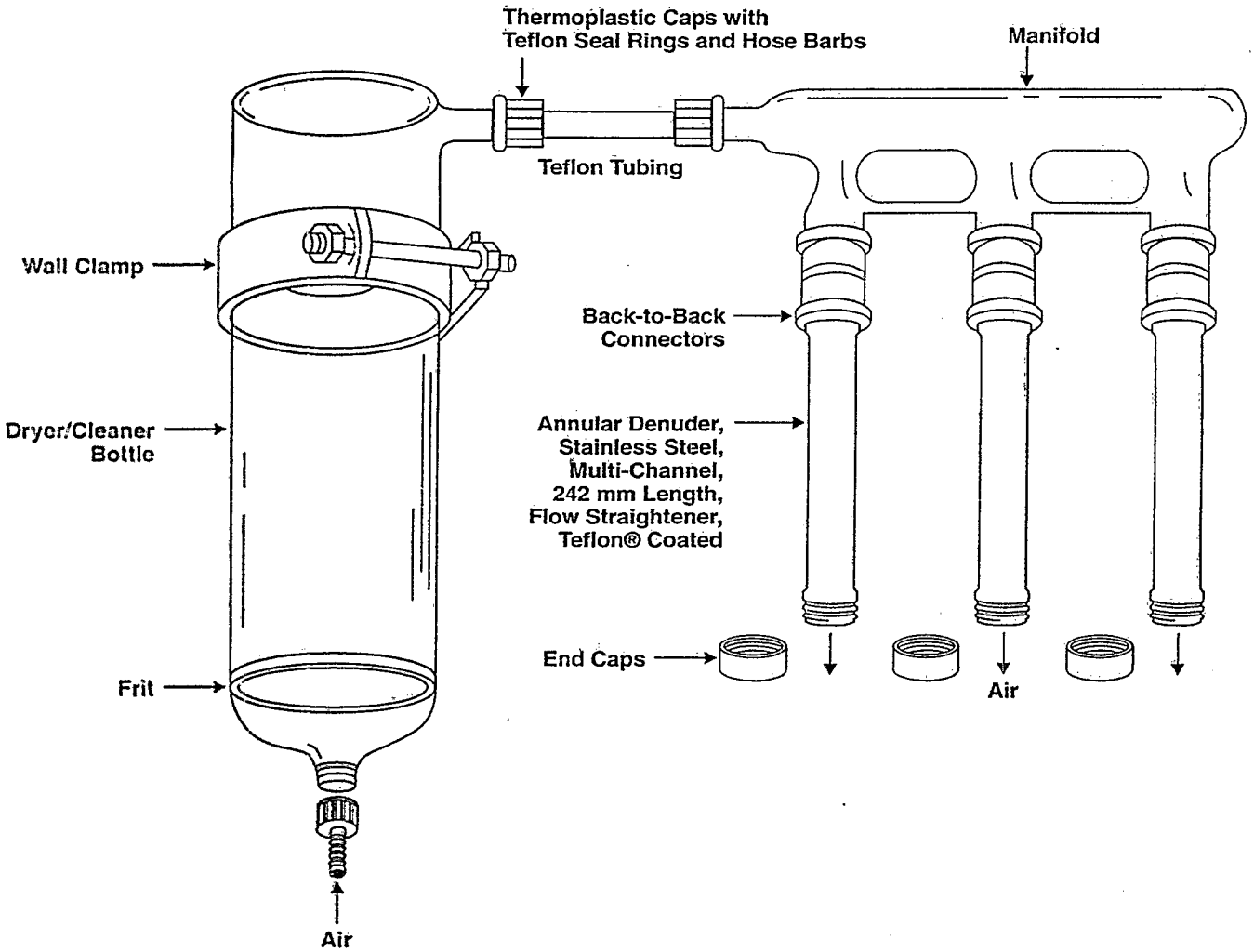

Figure 7. Drying Train and Manifold.

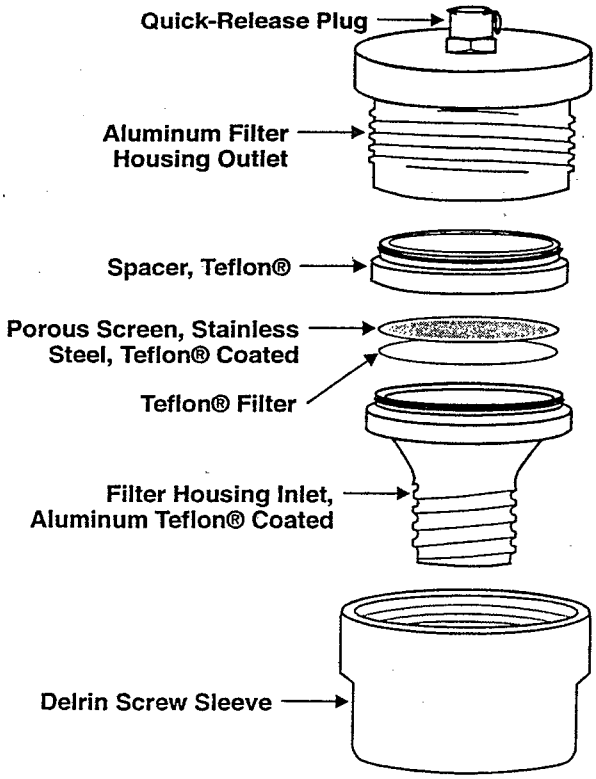

Acid Aerosol Filter Assembly

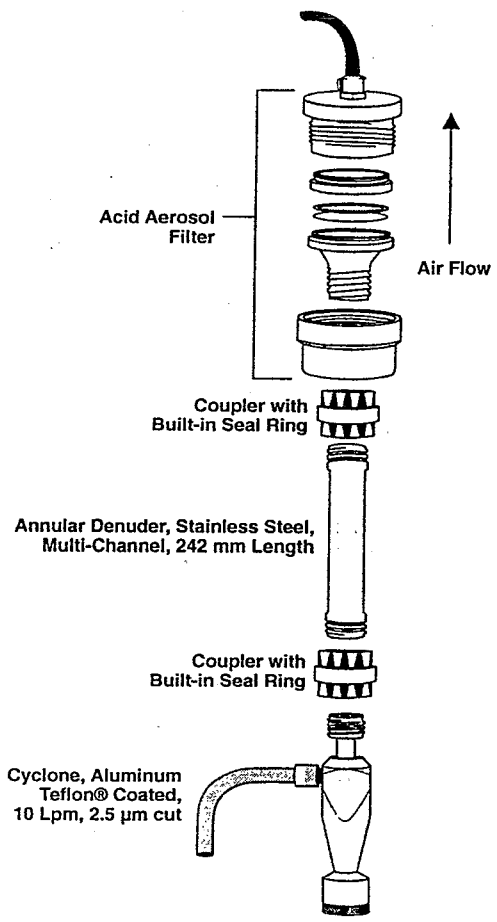

Acid Aerosol Filter Assembly
Shown in line

Figure 8. Acid Aerosol Filter Assembly.

DETERMINATION OF THE STRONG ACIDITY OF
ATMOSPHERIC FINE-PARTICLES (<2.5μm)

GENERAL

Project: _____
Site: _____
Location: _____

Sample Code: _____

Date: _____
Location of Sampler: _____

Operator: _____

EQUIPMENT

Mass Flow
Controller No.: _____
Lab Calibration Date: _____
Flow Rate Set Point: _____
Calibrated By: _____
Rotameter No.: _____
DGM No.: _____

Sampler
Citric Acid Denuder No.: _____
Filter Assembly No.: _____

SAMPLING DATA

	Time	Stop
Time:		
Flow Rate:		
Temperature:		
Pressure:		
Avg. Flow Rate:		
Leak Check (Before):		
(After):		

Total Sample Vol.: _____
Flow Maintained Rate: _____ (±5%)

Time	Flow Rate (Q), L/min	Ambient Temperature, °C	Barometric Pressure, mm Hg	Relative Humidity, %	Comments

Figure 9. Annular Denuder Field Test Data Sheet.

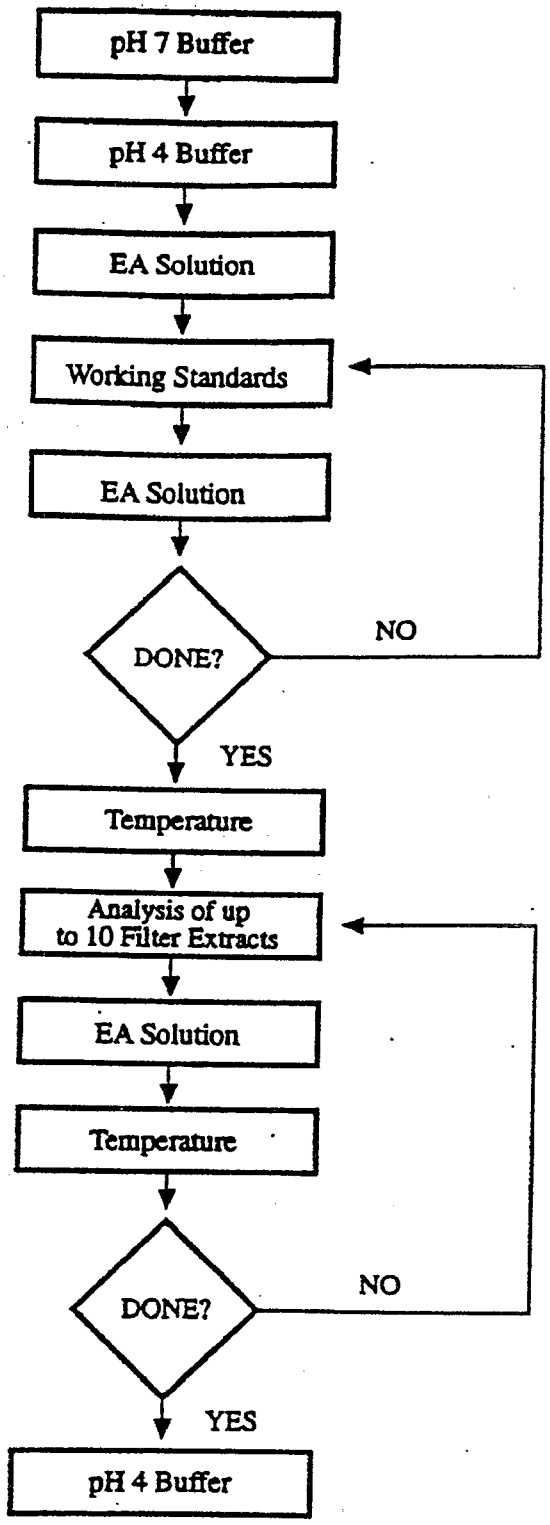

Figure 10. Calibration and Analysis Step for pH Determination.

Determination of the Strong Acidity of
Atmospheric Fine-Particles (<2.5 μm)

Name: _____ Sample I.D.: _____
Date: _____ Location: _____
LAB: _____

Constituent	RUN NUMBER						
	1	2	3	4	5	6	7
pH 7 Buffer							
1							
2							
3							
pH 4 Buffer							
1							
2							
3							
EA Solution							
1							
2							
3							
Working Standards							
1A1							
1A2							
EA							
1B1							
1B2							
EA							
2A1							
2A2							
Temp.							
EA							
2B1							
2B2							
EA							
3A1							
3A2							
EA							
Temp.							
3B1							
3B2							
EA							

Figure 11. pH Analytical Laboratory Log Form.

Constituent	RUN NUMBER						
	1	2	3	4	5	6	7
4A1							
4A2							
EA							
4B1							
4B2							
Temp.							
EA							
5A1							
5A2							
EA							
5B1							
5B2							
EA							
6A1							
6A2							
Temp.							
EA							
6B1							
6B2							
EA							
EA							
7A1							
7A2							
EA							
7B1							
7B2							
Temp.							
Sample Extracts							
A							
A1							
B							
B1							
C							
C1							
D							
D1							
E							
E1							
EA							
Temp.							
EA Solution							
1							
2							
3							
pH4 Buffer							
1							
2							
3							

Figure 11 (cont). pH Analytical Laboratory Log Form.

EPA/625/R-96/010a.

Compendium of Methods for the Determination of Inorganic Compounds in Ambient Air

Compendium Method IO-4.2

DETERMINATION OF REACTIVE ACIDIC AND BASIC GASES AND STRONG ACIDITY OF ATMOSPHERIC FINE-PARTICLES (<2.5 μm)

Center for Environmental Research Information
Office of Research and Development
U.S. Environmental Protection Agency
Cincinnati, OH 45268

January 1997

Acknowledgements

This Method is a part of *Compendium of Methods for the Determination of Inorganic Compounds in Ambient Air* (EPA/625/R-96/060a), which was prepared under Contract No. 68-C3-0315, WA No. 2-10, by Midwest Research Institute (MRI), as a subcontractor to Eastern Research Group, Inc. (ERG), and under the sponsorship of the U.S. Environmental Protection Agency (EPA). Justice A. Manning, Center for Environmental Research Information (CERI), and Frank F. McElroy, National Exposure Research Laboratory (NERL), both in the EPA Office of Research and Development, were the project officers responsible for overseeing the preparation of this method. Other support was provided by the following members of the Compendia Workgroup:

- James L. Cheney, Corps of Engineers, Omaha, NB
- Michael F. Davis, U.S. EPA, Region 7, KC, KS
- Joseph B. Elkins Jr., U.S. EPA, OAQPS, RTP, NC
- Robert G. Lewis, U.S. EPA, NERL, RTP, NC
- Justice A. Manning, U.S. EPA, ORD, Cincinnati, OH
- William A. McClenny, U.S. EPA, NERL, RTP, NC
- Frank F. McElroy, U.S. EPA, NERL, RTP, NC
- William T. "Jerry" Winberry, Jr., MRI, Cary, NC

This Method is the result of the efforts of many individuals. Gratitude goes to each person involved in the preparation and review of this methodology.

Author(s)

- William T. "Jerry" Winberry, Jr., MRI, Cary, NC
- Thomas Ellestad, U.S. EPA, RTP, NC
- Bob Stevens, U.S. EPA, RTP, NC

Peer Reviewers

- Delbert Eatough, Brigham Young University, Provo, UT
- Shere Stone, University Research Glassware Corp., Chapel Hill, NC
- Petros Koutrakis, Harvard School of Public Health, Boston, MA
- J. Waldman, Robert Wood Johnson Medical School, New Brunswick, NJ

DISCLAIMER

This Compendium has been subjected to the Agency's peer and administrative review, and it has been approved for publication as an EPA document. Mention of trade names or commercial products does not constitute endorsement or recommendation for use.

Method IO-4.2
Determination of Reactive Acidic and Basic Gases and Strong Acidity of Atmospheric Fine Particles (<2.5μm) in Ambient Air

TABLE OF CONTENTS

	Page
1. Scope	4.2-1
2. Applicable Documents	4.2-2
2.1 ASTM Standards	4.2-2
2.2 Other Documents	4.2-2
3. Summary of Method	4.2-2
4. Significance	4.2-3
5. Definitions	4.2-3
6. Factors Affecting Denuder Efficiency	4.2-4
7. Apparatus	4.2-4
7.1 Sampling	4.2-5
7.2 Analysis	4.2-7
8. Reagents and Materials	4.2-8
9. Preparation of Coating and Extraction Reagents	4.2-10
9.1 Impactor Frit Coating Solution Preparation	4.2-10
9.2 Impactor Frit Extraction Solution Preparation	4.2-10
9.3 Annular Denuder Coating Solutions Preparation	4.2-10
10. Elutriator and Acceleration Jet (Inlet) Assembly	4.2-10
11. Impactor Frit Preparation and Installation	4.2-11
11.1 Impactor Frit Installation	4.2-11
11.2 Impactor Frit Preparation	4.2-11
12. Filter Pack Preparation and Assembly	4.2-12
13. Annular Denuder System Preparation	4.2-13
13.1 Annular Denuder Coating Procedure	4.2-13
13.2 Annular Denuder Drying Procedure	4.2-13
13.3 Annular Denuder System (ADS) Assembly	4.2-13
13.4 Laboratory Leak-Check of ADS	4.2-14
14. Sampling	4.2-15
14.1 Placement of Denuder System	4.2-15
14.2 Start-Up	4.2-16
14.3 Sample Shutdown	4.2-17
14.4 Corrective Action for Leak Test Failure	4.2-17
15. ADS Disassembly	4.2-18
16. Extraction Procedures	4.2-18
16.1 Impactor Frit Coating Extraction	4.2-19
16.2 Denuder Extraction	4.2-19
16.3 Filter Extraction	4.2-19

TABLE OF CONTENTS (continued)

		Page
17.	Ion Chromatography Analysis	4.2-20
	17.1 Standards Preparation	4.2-21
	17.2 Reagent Preparation	4.2-22
	17.3 Sample Preparation	4.2-23
	17.4 Basic System Operations - Start-up and Shut-down	4.2-23
	17.5 Basic Troubleshooting	4.2-26
18.	Ammonia Analysis by Technicon Autoanalysis	4.2-27
	18.1 Standards and Stock Solutions Preparation	4.2-27
	18.2 Reagent Preparation	4.2-29
19.	pH Analysis	4.2-30
	19.1 Standard and Reagent Preparation	4.2-30
	19.2 Calibration of pH Meter	4.2-32
	19.3 Pre-Analysis Calibration	4.2-32
	19.4 pH Test 0.01 N $HClO_4$ Solution	4.2-32
	19.5 Analysis of Working Standard	4.2-33
	19.6 Analysis of Filter Extracts	4.2-33
20.	Atmospheric Species Concentration Calculations	4.2-34
	20.1 Assumptions of the Annular Denuder System	4.2-34
	20.2 Calculations Using Results from IC Analysis	4.2-35
	20.3 Calculations Using Results from pH Analysis	4.2-35
21.	Variations of Annular Denuder System Usage	4.2-38
22.	Method Safety	4.2-39
23.	Performance Criteria and Quality Assurance (QA)	4.2-39
	23.1 Standard Operating Procedures (SOPs)	4.2-40
	23.2 QA Program	4.2-40
24.	References	4.2-40

Chapter IO-4
Atmospheric Basic & Acidic Constituents

Method IO-4.2
DETERMINATION OF REACTIVE ACIDIC AND BASIC GASES AND STRONG ACIDITY OF ATMOSPHERIC FINE PARTICLES (<2.5μm)

1. Scope

1.1 The quantitative measurement of reactive acidic and basic gases and strong acidity of atmospheric fine particles in ambient air using annual denuder technology is described in this method. The difference between Inorganic Compendium Methods IO-4.1 and IO-4.2 is that the latter accounts for possible interference from the dissociation of ammonium nitrate aerosol from particles collected on the filer by two mechanisms:

$$NH_4NO_3 = NH_3(g) + HNO_3(g)$$

$$NH_4NO_3 + NH_4HSO_4 = (NH_4)_2SO_4 + HNO_3$$

Consequently, an accurate and quantitative value for determining strong acidity of atmospheric fine particle is calculated by subtracting the ammonia concentration from the nitrate value and the result added to the acidity measurement on the Teflon® filter to give a correct strong acidity measurement.

1.2 The chemical species that can be determined by this method are gaseous SO_2, HNO_2, HNO_3, and NH_3 and particulate $SO_4^{=}$, NO_3^{-}, NH_4^{+}, and H^{+}. Detection and quantitation limits are given in Table 1.

1.3 This method is a composite of methodologies developed by the U. S. Environmental Protection Agency (EPA), Harvard University and the CNR Laboratories (Italy). A number of air pollution studies in Italy, United States, Canada, Mexico, Germany, Austria, and Spain, and in public health services, epidemiology, and environmental research centers have used this method.

1.4 The equipment described herein is used to measure acidic and basic gases and particulate matter contained in ambient air. The methodology originally was developed for monitoring regional-scale acidic and basic gases and particulate matter in support of EPA's field programs involving the Integrated Air Cancer Research Program and the Acid Deposition Network. Similarly, the methodology has been used to characterize the urban haze in Denver, Houston, and Los Angeles.

1.5 The techniques, procedures, equipment, and other specifications comprising this method are derived and composited from those actually used by contributing research organizations and, therefore, are known to be serviceable and effective. At this stage, this method is a unified, consensus, tentative, draft method intended for further application and testing. Users should be advised that the method has not yet been adequately tested, optimized, or standardized. Many of the specifications have been initially established by technical judgement but have not been subjected to rugged testing. In some cases, alternative techniques, equipment, or specifications may be acceptable or superior. In applying the method, users are encouraged to consider alternatives, with the understanding that they should test any such alternatives to determine their adequacy and confirm and document their advantages. Information and comments are

solicited on improvements, alternative equipment, techniques, specifications, performance, or any other aspect of the method.

2. Applicable Documents

2.1 ASTM Standards

- D1356 *Definitions of Terms Related to Atmospheric Sampling and Analysis.*

2.2 Other Documents

- Ambient Air Studies (1-14).
- U. S. EPA Acid Aerosol Document (15).

3. Summary of Method

3.1 The annular denuder system (ADS) consists of (1) an inlet with an impactor or cyclone preseparator designed to remove all particles with a DP_{50} of 2.5 μm or greater, (2) annular denuders to quantitate acidic and basic gases, and (3) a filter pack for atmospheric acidity and particles. In operation, ambient air is drawn through an elutriator-accelerator jet assembly, an impactor frit and coupler assembly, and past glass denuder walls that have been etched and coated with chemicals that absorb the gaseous species of interest. The remaining air stream is then filtered through Teflon® and Nylasorb® membrane filters. Teflon® and nylon membrane filters are used to capture ammonium and nitrate aerosol and sulfate particulate matter. Nitric acid and sulfur dioxide will also be collected by the nylon filter but these measurements are treated as interference. The ADS is illustrated in Figure 1. The field sampling box with the ADS and pump-timer system is shown in Figure 2.

3.2 Following each run, the ADS assembly is removed from its field housing, its ends are capped, and it is brought back to the laboratory. In the laboratory, the assembly pieces are uncoupled and capped. The annular denuders are extracted with 5 mL of deionized water. The extracted solutions are subsequently analyzed for ions corresponding to the collected gaseous species (see Figure 1). The filters are placed into filter bottles where 5 or 10 mL of the ion chromatographic (IC) eluent are pipetted into each filter bottle with the filters faced downward and completely covered by the eluent. The filter bottle is capped and put in an ultrasonic bath for 30 min. The bottles are stored in a clean refrigerator at 5°C until analysis.

3.3 The analysis of anion and cation concentrations collected by the denuders and filter pack is typically performed by ion chromatographic and Technicon® colorimeter autoanalytic procedures. The H^+ concentration of extracts from the Teflon® filter downstream of the denuders is performed by pH measurements using commercially available pH meters calibrated with standards.

4. Significance

4.1 Reactive acidic (SO_2 and HNO_3) and basic (NH_3) gases and particles are found in the atmosphere as a result of emissions from a variety of fossil fuel combustion sources, including industrial and commercial facilities, industrial processes, etc. Measurements of these chemical species are currently being used in a range of environmental studies, such as in (1) epidemiological programs to assess the impact of acid aerosols on respiratory impairment, (2) receptor modeling to determine the origin of particles that impact EPA's PM_{10} air particulate standard, (3) assessment of the impact of particulate nitrate and sulfate on visibility, and (4) quantification of the impact of acidic and basic air pollutants on issues related to acid rain.

4.2 Unique features of the annular denuder that separate it from other established monitoring methods are the elimination of sampling artifacts due to interaction between the collected gases and particles and the preservation of the samples for subsequent analysis. This preservation is accomplished by removing NH_3 in the gas stream by the citric acid coated denuder and reducing the probability of the particulate sulfate ($SO_4^{=}$) captured by the filter pack from being neutralized to ammonium sulfate [$(NH_4)_2SO_4$]. If NH_3 is not extracted from the gas stream prior to filtration, particulate sulfate and gaseous sulfur dioxide correction would be required for accurate measurements. These biases in its configuration and analytical methodology are addressed in this method.

5. Definitions

Definitions used in this document and any user prepared Standard Operating Procedures (SOPs) should be consistent with ASTM D1356. All abbreviations and symbols are defined within this document at the point of use.

5.1 Particulate Mass. A generic classification in which no distinction is made on the basis of origin, physical state, and range of particle size. (The term "particulate" is an adjective, but it is commonly used incorrectly as a noun.)

5.2 Primary Particles (or Primary Aerosols). Dispersion aerosols formed from particles that are emitted directly into the air and that do not change form in the atmosphere. Examples include windblown dust and ocean salt spray.

5.3 Secondary Particles (or Secondary Aerosols). Dispersion aerosols that form in the atmosphere as a result of chemical reactions, often involving gases. A typical example is sulfate ions produced by photochemical oxidation of SO_2.

5.4 Particle. Any object having definite physical boundaries in all directions, without any limit with respect to size. In practice, the particle size range of interest is used to define "particle." In atmospheric sciences, "particle" usually means a solid or liquid subdivision of matter that has dimensions greater than molecular radii ($\sim$10 nm); there is also not a firm upper limit, but in practice it rarely exceeds 1 mm.

5.5 Aerosol. A disperse system with a gas-phase medium and a solid or liquid disperse phase. Often, however, individual workers modify the definition of "aerosol" by arbitrarily requiring limits on individual particle motion or surface-to-volume ratio. Aerosols are formed by (1) the suspension of particles due to grinding or atomization or (2) the condensation of supersaturated vapors.

5.6 Coarse and Fine Particles. Coarse particles are those with diameters greater than 2.5 μm but less than 10 μm; fine particles are those with diameters less than 2.5 μm. These two fractions are usually defined in terms of the separation diameter of a sampler.

[Note: Separation diameters other than 2.5 μm have been used.]

5.7 Annular. Refers to rotating to, or forming a ring. In the annular denuder sampler, the annular refers to the cylinder to which coating is applied to the interior parallel planes to remove gaseous pollutants by diffusion chemistry.

5.8 Denuder. The process gaseous pollutants from the gas stream.

5.9 Equivalent Weight. The equivalent weight, or combining weight, of a compound or ion is its formula weight divided by the number of replaceable hydrogen atoms.

5.10 Normal Solution. Solution that contains a gram-equivalent weight of solute in a liter of solution.

6. Factors Affecting Denuder Efficiency

6.1 Operation below 20% relative humidity (RH) may result in less than quantitative collection of SO_2. Atmospheric water vapor in concentrations above 30% RH has been shown not to be an interferant for SO_2 collection.

6.2 Studies are being conducted to identify interferents, and calculations are being developed to correct the measurements obtained by the annular denuder system for identifiable interferents. For example, the presence of ozone (O_3) is known to oxidize nitrous acid (HNO_2) to nitric acid (HNO_3); therefore, HNO_2 measurements are often underestimates. Calculations have been developed to adjust for this oxidation process and to provide more accurate estimations of HNO_2 concentrations in the atmosphere.

6.3 Other studies include the possible chemical reactions (organic and inorganic) that may occur with selected coating solutions that interfere with the accurate measurement of the chemical species of interest.

6.4 The efficiency of impactor collection decreases when the impactor surface is loaded. The average operational time before such loading occurs has not been determined.

7. Apparatus

[Note: This method was developed using the annular denuder system produced by University Research Glassware, 116 S. Merritt Mill Road, Chapel Hill, NC 27516, (919) 942-2753, as a guideline. EPA has

experience in use of this equipment during various field monitoring programs over the last several years. Other manufacturers' equipment should work as well. However, modifications to these procedures may be necessary if another commercially available sampler is selected.]

7.1 Sampling

7.1.1 Elutriator and Acceleration Jet Assembly (see Figure 3). Under normal sampling conditions, the elutriator or entry tube is made of either Teflon®-coated glass or aluminum. When using glass, the accelerator jet assembly is fixed onto the elutriator, and the internal surfaces of the entire assembly are coated with Teflon®. When aluminum is used, the accelerator jet assembly is removable. The jet is made of Teflon® or polyethylene, and the jet support is made of aluminum. Again, all internal surfaces are coated with Teflon®. Both assemblies are available with 2, 3 and 4 mm inside diameter jets (nozzles).

7.1.2 Teflon® Impactor Support Pin and Impactor Frit Support Tools (see Figure 4). Made of either Teflon® or polyethylene and used to aid in assembling, removing, coating and cleaning the impactor frit.

7.1.3 Impactor Frit and Coupler Assembly (see Figure 5). The impactor frit is 10 mm x 3 mm and is available with a porosity range of 10-20 μm. The frits should be made of porous ceramic material or fritted stainless steel. Before use, the impactor frit surface is coated with a Dow Corning 660 oil and toluene solution and sits in a Teflon® seat support fixed within the coupler The coupler is made of thermoplastic and has Teflon® clad sealing "0"-rings that are located on both sides of the seat support inside the coupler. The couplers are composed of two free moving female threads that house the support tools when assembling and removing the impactor frit, and couple the denuders when sampling. Arrows on the metal band hold the female threads together. These arrows should be pointing in the direction of air flow (see Figure 1) when the ADS is assembled.

[Note: In situations when there are substantial high concentrations of coarse particles (>2.5 μm), a Teflon®-coated aluminum cyclone should be used in place of the acceleration jet and impactor assembly, as illustrated in Figure 6.]

The cyclone is made of Teflon®-coated stainless steel. The location of the cyclone with respect to the denuder, heated enclosure, and meter box is illustrated in Figure 6.

7.1.4 Annular Denuder (see Figure 7). The denuder consists of two concentric glass tubes. The tubes create a 1 mm orifice, which allows the air sample to pass through. The inner tube is inset 25 mm from one end of the outer tube; this end is called the flow straightener end. The other end of the inner tube is flush with the end of the outer tube. Both ends of the inner tube are sealed. In this configuration, the glass surfaces facing the orifice are etched to provide greater surface area for the coating. Three types of denuders are available. One is the older version that accommodates the impactor support pin assembly and can only be the first denuder in sequence. It is available in glass with the impactor support holder made of glass and the impactor support pin assembly made of Teflon®. The denuder is 265 mm long with size #30 threads for coupling. It is available with flow straighteners at both ends; however, most denuders in use today only have one flow straightener end. The second most recent denuder version, which can be used as any denuder in sequence, is available in glass with only one flow straightener end. It is 242 mm long and has size #30 threads. Finally, the third denuder design involves two inner concentric glass tubes (1 mm separation) positioned around a solid center glass rod, as illustrated in Figure 5. Once again, the glass surfaces are etched to provide greater surface area for the

coating. The inner glass tubes and coater rod are inset 25 mm from one end of the outer Teflon®-coated stainless steel tube to serve as the flow straightener end. All denuder types should be equipped with thermoplastic or polyethylene caps when purchased.

7.1.5 Caps for Annular Denuder (see Figure 2). Caps are made of either polyethylene or thermoplastic and are used in the coating and drying processes and for storage and shipment. The thermo-plastic caps include a removable Teflon® seal plate when purchased. Repeated reuse of these types of caps have caused some contamination due to improper cleaning of the cap and Teflon® seal plate, i.e., fluid tends to be trapped under the seal plate. The polyethylene caps are not equipped with seal plates. Polyethylene caps tend to dry faster and seal better than the thermoplastic caps.

7.1.6 Annular Denuder Couplers (see Figure 4). The couplers should be made of thermoplastic and equipped with Teflon® "O"-rings that sandwich a silicone rubber ring on three sides. This design provides elasticity for better sealing under extremely cold temperature conditions in which Teflon® does not give. Two types of couplers are available. In the older version, the couplers have removable seal rings. Problems with denuder breakage and leakage due to improper threading of the couplers with the denuders led to the development of a second type of coupler. The new couplers are equipped with permanent seal rings that provide more even threading and a better seal when coupled. Some couplers have built-in flow-straighteners. The couplers are used to couple the annular denuders and for coupling the last denuder with the filter pack.

7.1.7 Filter Pack Assembly (see Figure 8). The filters are supported by stainless steel porous screens and housed in a polyethylene filter ring housing. The Teflon® filter ring housing directly follows the Teflon® filter housing inlet component. The "nylon" filter ring housing follows the Teflon® filter ring housing and sits on a Teflon® "O"-ring, which seals the filter ring housing components to the filter housing outlet component. Four filters may be in series depending on the species of interest. The filter housing outlet component is aluminum and accommodates a polyethylene screw sleeve that seals the filter pack assembly. The sleeve is available in different lengths to accommodate up to four filter ring housing units. A stainless steel "Quick-Release" plug screws into the aluminum outlet component for connecting the pump-timer to the filter pack assembly. It is equipped with an orange "dust cover" (male plug) upon purchase.

7.1.8 Drying Manifold Assembly (see Figure 9). Made of pyrex and is available to accommodate as many as four drying denuders. The denuders are attached to the manifold with back-to-back Bakalite bored caps. The bored caps are connected with a Teflon® connector ring. Air is pushed through an air dryer/ cleaner bottle made of 2 1/2" heavy wall pyrex that contains silica gel, calcium sulfate, and activated charcoal (not available with assembly). The tubing that connects the dryer/cleaner bottle to the drying manifold should be secured at each cap with either Teflon® washers or Teflon® washers coupled with Teflon® hose barbs.

7.1.9 Vacuum Tubing. Low density polyethylene tubing, 3/8" diameter for distances of less than 50 ft., 1/2" diameter for distances greater than 50 ft. Since this tubing is used downstream from the sampler, similar sized tubing or pipe of any material may be substituted. The tubing must have sufficient strength to avoid collapsing under vacuum (Fisher-Scientific, 711 Forbes Ave., Pittsburgh, PA 15219, 412-787-6322).

7.1.10 Tube Fitting. Compression fittings (Swagelok®, Gyrolok® or equivalent) to connect vacuum tubing (above) to an NPT female connector or filter holder and connect vacuum tubing to fitting on differential flow controller. The fittings may be constructed of any material since they are downstream of the sampler (Fisher-Scientific, 711 Forbes Ave., Pittsburgh, PA 15219, 412-787-6322).

7.1.11 Annular Denuder System Sampling Case (see Figure 10). Made of a "high-impact" plastic and insulated with polyurethane. It is 4 ft long by 6" wide and 6" deep. Two heater units, a fan blower,

and an air outlet are located in the lid of the housing. Also, located on the lid are the automatic and manual control switches and a 12-V power supply outlet for the heater and fan. The bottom of the box houses the ADS. The elutriator end of the ADS protrudes through one end of the box, while the denuders are supported in the box by chrome plated spring clips. If the Teflon®-coated aluminum cyclone is used to remove coarse particles, it is also housed in the heated sampling box, with the elutriator end protruding through the sampling box, as illustrated in Figure 4. A vacuum plug known as a "quick-release" coupler is linked to the filter pack of the ADS. This plug connects the ADS to 1 1/4" Teflon® rubber "clad" shrink tubing that exhausts the air stream to the ambient air. The box is sledge hammer proof.

7.1.12 Annular Denuder Field-to-Lab Case (Optional). The field-to-lab case is made of rigid plastic and insulated with polyurethane. It is made to be hand carried, not shipped, and is used to transport four total annular denuder systems, each consisting of either three annular denuder sections or two annular denuder sections and one denuder-impactor assembly. The systems are packed already assembled and capped; they are ready for sampling or sample analysis. The case has a carrying handle, a lock, and three latches and is equipped with two keys.

7.1.13 Annular Denuder Shipping Case (Optional). Made of formica, backed with plywood and insulated with polyurethane. The corners are reinforced with metal. It is made to withstand shipping by truck, UPS, and Federal Express. Each case is stackable and lockable and has a carrying handle. Seven total annular denuder systems can be packed in the case, provided each system contains four denuders each. The systems can consist of either three denuders (242 mm long) and one denuder-impactor assembly (265 mm long) or four denuders (242 mm long). Each component of the system is packed in its own storage compartment. The personal sampler assemblies can also be placed and shipped in this case.

7.1.14 Differential Flow Controller (Pump). Pumps air through the sampler at a fixed rate of between 5 and 20 standard L/min (typically 10 L/min) with a precision of $\pm 5\%$ over the range of 25 to 250 mm Hg vacuum.

7.1.15 Dry Gas Meter (DGM). Pulls 10 L of gas per revolution (Fisher-Scientific, 711 Forbes Ave., Pittsburgh, PA 15219, 412-787-6322).

7.2 Analysis

7.2.1 Ion Chromatograph. A chromatograph equipped with the appropriate anion and cation exchange resin filled separator and suppressor columns and conductivity detector for measuring acidic (SO_2, HNO_2 and HNO_3) and basic (NH_3) ions in solution (i.e. denuder and filter extracts) (Dionex Corp., 1228 Titan Way, Sunnyvale, CA 94086, 408-737-0700).

7.2.2 Technicon Colorimeter Autoanalyzer. Clorimetic analyzer able to detect specific ions of interest in aqueous extracts (Technicon Industrial Systems Corp., 511 Benedict Ave., Tarrytown, NY, 10591-5097, 800-431-1970).

7.2.3 pH Meter. A pH or pH/ion meter with an "integral" automatic temperature compensation and calibrated with (U. S. EPA, N.S.T.) standard buffers (pH 4 and 7), including 2 and 4 mL analysis cups (Orion and other vendors).

7.2.4 Polyethylene Bottles with Polyethylene Screw Caps. 50 mL and 100 mL. Used for storage of coating solutions, best source.

7.2.5 Erlenmeyer Flasks. 250 mL and 2 L borosilicate glass or polyethylene flasks with calibration, best source.

7.2.6 Graduated Cylinders. 10 mL and 100 mL borosilicate glass or polyethylene cylinders, best source.

7.2.7 Pipets. Class A 5 mL and 10 mL borosilicate glass pipettes or automatic pipettes. Calibrated "*to deliver*," best source.

7.2.8 Pipet Bulb. Made of natural rubber. Recommended to meet OSHA requirements, best source.

7.2.9 Micropipettes. Recommended 50 μL. Calibrated "*to contain*," borosilicate glass micropipette, best source.

7.2.10 Forceps. Recommended dressing forceps made of stainless steel or chrome-plated steel and without serrations. Used for handling filters (Millipore).

7.2.11 Stopwatch. Used for measuring flow rate of gas stream through DGM, best source.

7.2.12 Ultrasonic Cleaner. Used for filter extractions and parts cleaning. Most are temperature controlled. Temperature should be controlled during extraction at 65°C (Cole-Palmer Instrument Co., 7425 N. Oak Park Ave., Chicago, IL 60648, 9800-323-4340).

7.2.13 Clean Air Hood. Closed air hood with ammonia free air circulation. Used for Teflon® filter extraction for pH analysis, best source.

8. Reagents and Materials

8.1 Teflon® Filters. Zefluor® (PTFE) membrane filters 47 mm diameter with a 2 μm pore size. Only one side is Teflon®-coated; this side should face the air stream Gelman Sciences, 600 S. Wagner Rd., Ann Arbor, MI, 48106, 800-521-1520).

8.2 Nylasorb® Filters. Membrane filters 47 mm diameter with a 1 μm pore size. These filters are specially prepared and batch analyzed for low $SO_4^{=}$, NO_2^-, and NO_3^- background levels. If other brands of nylon membrane filters are used, they should be batch analyzed to ensure low and replicable levels of $SO_4^{=}$, NO_2^-, and NO_3^- Gelman Sciences, 600 S. Wagner Rd., Ann Arbor, MI, 48106 800-521-1520).

8.3 Denuder Extract Storage Vials. 30 mL (1 oz) screw-cap polyethylene sampling vials (Nalgene or equivalent). Allow eight per sample for each sampling period, best source.

8.4 Filter Extract Storage Vials. 100 mL polyethylene vials (Nalgene or equivalent). Allow two vials for each sampling period, best source.

8.5 IC Analysis Vials and Caps. Available in 5 mL and 0.5 mL and are made of polypropylene. The filter caps are made of plastic and contain a Teflon® filter through which the sample is extracted for analysis. Both the vials and filter caps should be disposable, best source.

8.6 Labels. Adhesive, for sample vials, best source.

8.7 Parafilm. Used for covering flasks and pH cups during pH analysis, best source.

8.8 Kimwipes® and Kay-dry Towels. Used for cleaning sampling apparatus and analysis equipment, best source.

8.9 Stoppers. Cork or polyethylene; best source.

8.10 Sodium Carbonate (Na_2CO_3). ACS reagent grade, best source.

8.11 Sodium Chloride (NaCl). ACS reagent grade, best source.

8.12 Methanol (Methyl Alcohol - CH_3OH). ACS reagent grade, best source.

8.13 Toluene. ACS reagent grade, best source.

8.14 Glycerol (Glycerine - $CH_2OHCHOHCH_2OH$). ACS reagent grade, best source.

8.15 Citric Acid (Monohydrate - HOC (CH_2CO) $OH)_2COOH : H_2O$). ACS reagent grade, best source.

8.16 Hydrogen Peroxide (H_2O_2). ACS reagent grade, best source.

8.17 Ethanol (C_2H_5OH). ACS reagent grade, best source.

8.18 Sulfuric Acid (H_2SO_4). ACS reagent grade, best source.

8.19 Potassium Chloride (KCl). ACS reagent grade, best source.

8.20 Perchloric Acid ($HClO_4$). ACS reagent grade (60-62%), best source.

8.21 Distilled Deionized Water (DDW). ASTM Type I water.

8.22 pH Buffers. Standard buffers 4.00 and 7.00 for internal calibration of pH meter, best source.

8.23 Silica Gel. ACS reagent grade (indicating type), best source.

8.24 Sodium Bromide (NaBr). ACS reagent grade, best source.

8.25 Activated Charcoal. ACS reagent grade, best source.

8.26 Balance. Electronic analytical with internal calibration weights and enclosed weighing chamber. Precision of 0.1 mg (Fisher-Scientific, 711 Forbes Ave., Pittsburgh, PA, 15219, 412-787-6322).

8.27 Gloves. Polyethylene disposable. Used for impactor frit assembly and filter pack assembly, best source.

8.28 Dow Corning High Temperature Vacuum Oil. Dow Corning 660 oil used for impactor frit coating solution, best source.

8.29 Zero Air. A supply of compressed clean air, free from particles, oil, NO, NO_2, SO_2, HNO_3, and HONO. The supply may be either from a commercial cylinder or generated on site, best source.

8.30 Ion Chromatographic (IC) Eluent Solution. For extracting filters. This solution should be the same eluent as used for the ion chromatographic analysis of the filters. If the filter analysis is not to be performed by ion chromatography, a slightly basic solution (e.g., 0.003 N NaOH or sodium carbonate/bicarbonate) should be used to extract the Nylasorb® filter, while the Teflon® filter should be extracted with DDW.

9. Preparation of Coating and Extraction Reagents

9.1 Impactor Frit Coating Solution Preparation. Weigh 1 g of silicone oil (Dow Corning high temperature 660 oil) and place in a 100 mL polyethylene storage bottle. Add 100 mL of toluene. Mix thoroughly, close container, and store at room temperature. (WARNING - FLAMMABLE LIQUID).

9.2 Impactor Frit Extraction Solution Preparation. Add 100 mL of IC eluent to a clean polyethylene storage container. Pipette 5 mL of methanol into container. Mix thoroughly. Store, covered at room temperature.

9.3 Annular Denuder Coating Solutions Preparation

[Note: Different coatings may be used depending on the chemical species of interest.]

9.3.1 NaCl Coating Solution. Clean a 100 mL polyethylene storage vial and let dry at room temperature. Weigh 0.1 g of reagent grade NaCl and add to vial. Add 90 mL of deionized water and 10 mL of methanol. Mix thoroughly; store, covered at room temperature.

9.3.2 Na_2CO_3 Coating Solution. Clean a 100 mL polyethylene storage vial and let dry at room temperature. Measure 50 mL of methanol (WARNING - TOXIC, FLAMMABLE LIQUID) with a graduated cylinder and pour into vial. Measure 50 mL of DDW with a graduated cylinder and add to vial. Weigh 1 g of glycerol and add to DDW. Weigh 1 g of Na_2CO_3 and add to vial. Mix thoroughly, solution may fizz; wait for fizzing to stop before sealing vial. Store at room temperature.

9.3.3 Citric Acid Coating Solution. Clean a 100 mL polyethylene storage vial and let dry at room temperature. Measure 50 mL of methanol (WARNING - TOXIC, FLAMMABLE LIQUID) with a graduated cylinder and pour into vial. Weigh 0.5 g of citric acid and add to vial. Mix thoroughly; store, covered at room temperature.

10. Elutriator and Acceleration Jet (Inlet) Assembly

[Note: The all-glass configuration is shown in Figure 6A.]

10.1 The internal walls of the elutriator and jet assembly are coated with Teflon® to prevent losses of reactive species (SO_2, HNO_3, NH_3) during sampling. The elutriator prevents water and large particles from entering the inlet and thus extends the life of the impaction surface located immediately downstream of this assembly.

10.2 An aluminum version of this inlet is shown in Figure 3b. All inner surfaces of the aluminum unit are Teflon®-coated. The main difference between the all glass and the aluminum inlet is the jet

component of the aluminum inlet is replaceable, as shown in Figure 3b. The jet component is made of either Teflon® or polyethylene and is available in various diameters as needed to accommodate selected sample flow rates. The jet may be replaced using the tool shown in Figure 3b. The jet diameter for a sample flow rate of 10 L/min is 3.33 mm. At this flow rate, the inlet has a D_{50} cutpoint of 2.5 μm. If a different flow rate is used, the jet diameter must be changed to retain a D_{50} cutpoint to 2.5 μm. The relationship between jet diameter and flow rate to retain a D_{50} at 2.5 μm is shown in Figure 12. Table 2 contains the jet diameters and Reynolds number to maintain a D_{50} of 2.5 μm cutpoint at different flow rates between 1 and 20 L/min.

[Note: If the sampling area has substantial concentrations of coarse particles (>2.5 μm), the user may replace the acceleration jet and impactor assembly with the Teflon®-coated aluminum cyclone.]

The D_{50} cutpoint at a flow rate of 10 L/min is 2.5 μm, as illustrated in Figure 12.

11. Impactor Frit Preparation and Installation

11.1 Impactor Frit Installation

11.1.1 Impactor-Coupler. The impactor-coupler assembly (shown in Figure 13) is composed of two parts: the replaceable impactor frit and the coupler-impactor housing seat. The impactor surface is a porous ceramic or porous stainless steel frit, 10 mm x 3 mm. This frit is inserted into the coupler-impactor housing using the tools shown in Figure 13. The in-tool must be completely screwed in behind the impactor seat before the frit is pressed into place. Press the impactor frit gently but firmly into the seat of the impactor housing with your clean gloved finger. The impactor should fit into the housing so that it does not protrude above the seat. The impactor frit has a slight bevel. The narrow surface should be inserted into the impactor seat.

11.1.2 Impactor-Denuder. The impactor-denuder assembly (shown in Figure 4) is of three parts: the replaceable impactor frit, the impactor seat support pin, and the annular denuder impactor-pin support. The impactor frit is the same as described in Section 11.1.1 and is inserted into the impactor seat support pin. The impactor support pin can be hand-held while inserting the frit or it can be placed upright into the stainless steel frit holder #3 (see Figure 11). Press the support pin into the denuder pin support. The pin is grooved and has a viton "O"-ring to keep the pin snug in the denuder support during cold weather use (Teflon® tends to shrink at low temperatures). The support pin is removed by using the removal tool shown in Figure 4.

11.2 Impactor Frit Preparation

With the impactor frit in the impactor seat of either the coupler (see Figure 13) or the Teflon® impactor seat support pin that fits into the first denuder (see Figure 4), pipette 50 μL of the toluene-660 oil coating solution onto the impactor frit surface and allow to dry at room temperature. Cap both sides of the coupler impactor or denuder-impactor until use.

12. Filter Pack Preparation and Assembly

[Note: Any number of filters can be used depending on the target species of interest. The configuration referred to in this section does not collect NH_4^+.]

12.1 With clean gloves, disassemble the filter pack (see Figure 8) by unscrewing the large outer Teflon® collar (sleeve) from the aluminum filter housing outlet component.

[Note: Remove the red Bakelite® cap first. Lay the pieces out on clean Kimwipes®.]

12.2 Lay a clean Teflon® filter ring housing, with its large opening face up, on a clean Kimwipe®. Place a clean stainless steel screen in the filter ring housing.

12.3 Using clean filter forceps, place a Nylasorb® nylon filter on the screen. Insert a second filter ring housing on top of the nylon filter with its large opening face up. This design forms a "sandwich" with the nylon filter held between the two filter ring housings.

12.4 Place another clean screen on the second filter ring housing. Using clean filter forceps, place a Teflon® filter on the screen.

[Note: If a Teflasorb® Teflon® filter is used, be sure to place the Teflon®-coated side, not the webbed side, toward the air stream. If the webbed side is facing the air stream, $SO_4^=$ extraction from the filters may be inefficient.]

12.5 Place the Teflon® filter housing inlet component (see Figure 11) on top of the Teflon® filter, which forms another "sandwich" with the Teflon® filter held between the second filter ring housing and the housing inlet component. The housing inlet component connects the filter pack assembly to the last annular denuder through a thermoplastic coupler. Be careful not to twist the filterpack components, or damage will occur to the filters.

12.6 Lay the aluminum filter housing outlet component, with its large opening face up, on a clean Kimwipe®.

12.7 Insert the filter ring sandwiches (prepared in Sections 12.1-12.5) with the filter housing inlet component extending upward, in the aluminum filter base. Place the large outer Teflon® sleeve over the filter sandwich and screw onto the aluminum filter base. DO NOT OVERTIGHTEN! DO NOT TWIST FILTER PACK COMPONENTS!

12.8 Install the "Quick-Release" plug into the filter outlet component. DO NOT OVERTIGHTEN!

12.9 Install the red Bakalite® cap onto the filter inlet component and the orange dust cover onto the Quick-Release plug until ready to attach denuders.

13. Annular Denuder System Preparation

All new annular denuder parts obtained from suppliers should be cleaned with a dilute soap solution. The parts should then be thoroughly rinsed in DDW and allowed to dry at room temperature.

13.1 Annular Denuder Coating Procedure

[Note: If the first denuder holds the impactor, a blank Teflon® impactor support pin should be installed in the pin support holder before the coating procedure.]

13.1.1 Cap the end of the denuder that has the inner tube flush to the outer tube and set denuder upright on the capped end. For the denuders with flow-straighteners at both ends, either end can be capped. Measure 10 mL of the appropriate coating solution into a graduated cylinder. Pipette the 10 mL into the flow-straightener end of the upright capped annular denuder.

13.1.2 Cap the open end of the denuder, and holding horizontally, rotate the denuder to distribute the coating solution evenly.

13.1.3 Remove cap from flow-straightener end of denuder and decant excess coating solution into a clean denuder extract storage bottle labeled "denuder blank." Bottle label should include denuder number, coating solution and date.

13.1.4 Repeat this procedure with each denuder; label the denuders and bottles appropriately.

13.2 Annular Denuder Drying Procedure (see Figure 9)

[Note: As denuders dry, they change from translucent to a frosted appearance. Denuders are dry when they become uniformly frosted.]

13.2.1 Adjust drying train and manifold clean air flow to 2 to 3 L/min. Close toggle valve controlling clean air flow through manifold before attaching denuders.

13.2.2 Attach flow-straightener end to drying manifold port at the back-to-back bored caps (see Figure 9).

13.2.3 Open toggle valve and allow clean air to flow through the tube for several minutes.

13.2.4 Close toggle valve and reverse ends of tubes attached to manifold.

13.2.5 When an even frosted appearance is achieved, remove tubes from manifold, cap both ends with clean caps, and store until ready for use. Turn off air to drying manifold.

13.3 Annular Denuder System (ADS) Assembly

[Note: Described herein is an annular denuder system consisting of four denuders in series. Any number of denuders can be used at the operators' discretion. The denuders should be assembled in such a way that the flow-straightener end always follows the flush end of the previous denuder, except, if denuders with flow- straighteners at both ends are used. This type of assembly allows laminar flow conditions to be restored quickly.]

13.3.1 Lay the ADS pieces on a clean surface (i.e., Kimwipes®).

13.3.2 Remove the end caps from the first denuder. Denuder 1 is coated with NaCl and may or may not hold the impactor frit pin support. If the first denuder is equipped with the impactor frit pin-support, remove the blank impactor support pin. Gently insert the impactor support pin and coated frit assembly into the denuder-pin support. If the first denuder does not hold the impactor pin-support, attach the impactor frit seat equipped coupler assembly to the flow-straightener end of the first denuder.

[Note: DO NOT TIGHTEN! Do not tighten during the following procedure until Section 13.4.12 is reached.]

13.3.3 Attach a thermoplastic coupler to the opposite denuder end. Place a Teflon® clad "O"-ring inside the coupler, if needed.

13.3.4 Remove the end caps of the second denuder (Na_2CO_3 coated). Attach the end with the flow-straightener section to the first denuder-coupler assembly.

13.3.5 Attach a thermoplastic coupler to the opposite denuder end. Place a Teflon® clad "O"-ring inside the coupler, if needed.

13.3.6 Remove the end caps of the third denuder (Na_2CO_3 coated). Attach the end with the flow-straightener section to the second denuder-coupler assembly.

13.3.7 Attach a thermoplastic coupler to the opposite denuder end. Place a Teflon® clad "O"-ring inside the coupler, if needed.

13.3.8 Remove the end caps from the fourth denuder (citric acid coated). Attach the end with the flow-straightener section to the third denuder-coupler assembly.

13.3.9 Attach a thermoplastic coupler to the opposite denuder end. Place a Teflon® clad "O"-ring inside the coupler, if needed.

13.3.10 Attach the filter pack inlet to the fourth denuder coupler assembly.

13.3.11 Attach the elutriator-acceleration jet assembly to the first denuder-coupler assembly. Tighten very gently--DO NOT OVERTIGHTEN!

13.3.12 Tighten the remaining couplers very gently - DO NOT OVERTIGHTEN!

13.3.13 Cap elutriator with orange dust cover until use.

[Note: When collecting and measuring gaseous HNO_3, SO_2, and NH_3, and particulate NO_3^-, NH_4^+, and $SO_4^=$, assemble the annular denuders as previously described. The difference between deposited HNO_2 and HNO_3 cannot be distinguished if the NaCl coated denuder does not precede the Na_2CO_3 coated denuder. The amount of HNO_2 collected cannot be quantified if two Na_2CO_3 coated denuders are not in series. Also, NH_3 must be taken out of the gas stream prior to the air stream entering the filter pack. Otherwise, reaction of the unneutralized sulfate will result. If ammonia (NH_3) and/or H^+ measurements are not to be analyzed for, then the use of a citric acid coated denuder is not important. However, with the removal of NH_3, some nitrate collected on the Teflon® filter will evaporate and be found on the nylon filter.]

13.4 Laboratory Leak-Check of ADS

[Note: CAUTION--Do not subject the system to sudden pressure changes or filters may tear.]

13.4.1 Remove the orange dust cap from the impactor opening. Attach the "Quick-Release" to a pump module. Turn on the pump. Be certain that flow through the ADS occurs by checking the rotameter.

13.4.2 Briefly cap the elutriator with the orange dust cap. The flow as indicated on the rotameter should drop to zero if no leaks exist.

13.4.3 Disconnect the pump from the ADS at the "Quick-Release" plug. Cap the "Quick-Release" plug with an orange dust cover. Turn off the pump. REMEMBER--never overtighten joints or breakage will result. If the joints can not be sealed with gentle tightening, the Teflon® "O"-rings are worn or defective and must be replaced.

13.4.4 Place the assembled sampler in its field-to-lab carrying case for transport to the field.

[Note: The ADS joints should be loosened slightly when extreme temperature changes are incurred during transportation. This precaution will prevent unnecessary breakage or distortion of the ADS components. Remember to allow the system to adjust to the indoor air temperature before tightening the joints and checking for leaks.]

14. Sampling

14.1 Placement of Denuder System

14.1.1 The placement of the annular denuder system must conform to a consistent set of criteria and guidance to ensure data comparability and compatibility. A detailed set of monitor siting criteria for ambient air monitoring and meteorological programs is given in the EPA document *Ambient Monitoring Guidelines for Prevention of Significant Deterioration (PSD)*, EPA-450/4-87-007, U. S. Environmental Protection Agency Office of Air Quality Planning and Standards, Research Triangle Park, NC 27711, May 1987.

The site must be away from localized sources of ammonia, such as composting and livestocking operations, landfills, sewage treatment plants, fertilizer plants and storage facilities, and recently plowed fertilized fields because aerosol acidity is subject to rapid neutralization by ambient bases.

14.1.2 A summary of key factors that should be considered as part of the placement of an air quality monitoring station containing an ADS are:

- Vertical placement above ground;
- Horizontal spacing from obstructions and obstacles;
- Unrestricted air flow; and
- Adequate spacing from roads.

The ADS sampler is mounted on a supported mast pole or tripod. The ADS inlet should be located 2-3 m above ground level. Placing the inlet closer to ground level should be considered *only* if the surface is flat and man-made (i.e., not unpaved dirt).

14.1.3 A summary of key criteria associated with these siting factors for air monitoring stations is included in Table 3.0. The information included in the table should be used to the extent possible as part of the monitoring network design to ensure that the monitoring program provides representative and unbiased data. However, site-specific constraints could make it very difficult to meet all criteria. For example, wooded areas around a site would make the siting very difficult. The use of the information in Table 3.0, coupled with a balanced evaluation by an experienced air quality and meteorology specialist, is highly recommended.

14.1.4 In general, for a site with no major obstruction and obstacles, the air sampler intake should be about 2-3 m aboveground. For a site with nearby roadways, however, intake placement should take into account the effects of road dust re-entrainment and vehicular emissions. In fact, a linear relationship

should be established between the horizontal distance of the sampler intake from the roadway and the aboveground elevation of that intake. For any roadway accommodating more than 3,000 vehicles per day, the intake should be between 5 and 25 m from the edge of the nearest traffic lane. It should also be 15 m aboveground for a distance of 5 m from the nearest traffic lane and 2 m aboveground for a distance of 25 m from the nearest lane. For a roadway supporting less than 3,000 vehicles per day, the intake should be placed at a distance greater than 5 m from the edge of the nearest traffic lane and at a height of 2-15 m aboveground.

14.2 Start-Up

14.2.1 Remove the ADS from its field-to-lab carrying case and load into the field sampling box. The ADS field sampling box is insulated with polyurethane which is configured to hold the ADS without allowing movement. Chromeplated spring clips hold the denuders in place. Automatic and manual control switches allow the sampling box to control the temperature of the ADS. The automatic switch should be used when the ADS is not in use and when the ADS is sampling for extended periods of time without constant supervision to prevent low temperature or sudden pressure change exposure of the ADS (these types of exposure can cause leaks to occur, condensation, or the filters to tear). When sampling, the ADS should be kept 1°C above the indoor temperature to prevent condensation. The sampling box has two connections with the pump timer: the plastic suction hose connected with "Quick-Release" couplers and the 12-V power cord with a "Quick-Disconnect" coupler. The power cord remains connected, and the suction hose is disconnected from the box each time the unit is opened. Inside the box, the hose is connected to the top of the filter pack with a "Quick-Release" coupler. During sampling the sample box is kept securely closed (see Figure 2).

14.2.2 Allow the pump to warm up for 20-30 min prior to testing so the pump will provide steady flow during testing.

14.2.3 To check the Heat/Cool cycles, flip one switch from "AUTO" to "MANUAL" and the other between "COOL" and "HEAT." Check to insure that the fan and heater work, respectively.

14.2.4 With the elutriator still capped, turn on the pump with the switch on the timer. The rotameter should indicate zero flow. If there is a flow, the assembly pieces need to be recoupled. Run leak check for 5-10 s. Turn off pump and remove elutriator cap. Record leak rate on Field Test Data Sheet (see Figure 14).

14.2.5 Attach DGM output to elutriator inlet. Turn on pump. Record start time on Field Test Data Sheet (see Figure 14). Using a stopwatch, record the time for 20.0 L to pass through the DGM. Record the DGM temperature and the absolute pressure of the DGM.

14.2.6 Calculate the flow rate as follows:

$$Q_{std} = (V/T)(P_{bar}/P_{std})(T_{std}/T_m)(F_c)$$

where:

Q_{std} = flow rate corrected to standard conditions, 25°C and 760 mm Hg, L/min.
V = volume of gas pulled through denuder system, L.
T = time required to pull gas through denuder system, minutes.
P_{bar} = barometric pressure, mm Hg.
P_{Std} = standard barometric pressure, 760 mm Hg.
T_{Std} = standard temperature, 298°K.

T_m = temperature of dry gas meter, °K(= °C + 273).
F_c = dry gas meter correction factor, dimensionless.

14.2.7 If the calculated flow rate is not between 9.5 and 10.5 L/min, readjust the flow rate and repeat Sections 14.2.4 and 14.2.5 until the rate is in the above range. Preliminary studies should be conducted to obtain an estimate of the concentrations of the species of interest.

14.2.8 Record the flow rate on Field Test Data Sheet.

14.2.9 Remove DGM connection tubing from elutriator inlet. Pump should remain running so that sampling continues. Higher flow rates may be used for shorter sampling periods. Concentration of the species of interest in indoor air and the configuration of the sampling equipment, determine the appropriate flow rates. Sampling at 10 L/min, requires a sampling time of 24 h to collect pollutant concentrations between 0.02 and 0.83 $\mu g/m^3$.

14.3 Sample Shutdown

14.3.1 Attach DGM connection tubing elutriator inlet with pump still running. Measure flow rate as in Sections 14.2.5 and 14.2.6. Record flow time, temperature, and pressure on Field Test Data Sheet (See Figure 14).

14.3.2 Turn off pump. Record time and elapsed time meter reading on log sheet. Remove DGM connection tubing from elutriator inlet. Remove ADS from the sampling box, cap the ends, and place the ADS in field-to-lab carrying case for transport to lab. Be careful not to stress the ADS during the transfer or breakage will result.

Caution: When the ADS is brought from a cold field sampling location to a warm laboratory, loosen the denuder couplings to prevent thermal expansion from breaking the denuders.

14.4 Corrective Action for Leak Test Failure

[Note: These steps should be followed when failure occurs during testing at the laboratory before transport to the field and in the field before testing.]

14.4.1 Sampler Leaks. Note the problem on the Field Test Data Sheet. Check assembly of ADS components. Replace gaskets. Check for proper seating of denuder surfaces. Replace any defective parts.

14.4.2 Cracked or Chipped Denuders or Elutriator Assemblies. Note problem on Field Test Data Sheet. Discard defective pieces. Do not try to extract cracked pieces. WARNING--USE CAUTION WHEN DISASSEMBLING CRACKED GLASSWARE. Pieces may shatter and cause severe cuts. Wear protective clothing.

14.4.3 Contaminated Blank Solutions. Note problem on Field Test Data Sheet. Follow parts-cleaning procedures closely. Examine the sampler preparation area for possible sources of contamination and remove source. Check DDW being used in the solution preparations and extractions. Fill a clean 25 mL polyethylene extraction bottle with the DDW used in solution preparation and extraction; send to lab for analysis. If contaminated, correct deionization system.

14.4.4 Flow Rate Disagreement. Note problem on Field Test Data Sheet. Check vacuum gauge on flow module. If a high vacuum exists, the sampler has become blocked. This blockage may be due to dust or smoke particles clogging the filters or to obstructions in the system or tubing. Check flow module. Repair as needed.

14.4.5 Inadequate Flow Rate. Note problem on Field Test Data Sheet. Check rotameter on flow controller. If adequate flow is shown here, a leak exists between the controller and the DGM. If no flow is shown on rotameter, check vacuum gauge on controller. If no vacuum exists, pump needs repair. If a high vacuum is shown, an obstruction exists in the system. Check to see that the paper filter dividers were not accidentally installed with the filters in the filter pack. Check tubing for kinks.

[Note: Typically the pressure drop across the filters should be approximately 1" Hg at 10 L/min flow rate at sea level. This pressure drop can vary from 1-10 L/min depending on elevation.]

15. ADS Disassembly

15.1 Remove the ADS from the field-to-lab carrying case using both hands. To prevent stress, hold the ADS by its ends.
Caution: Do not stress the ADS while removing it from the case.

15.2 Decouple the elutriator-jet assembly from the first denuder-impactor-coupler assembly.

15.3 When using the denuder-impactor, the frit-pin must be removed from the support in the denuder before removing the frit from the pin. The frit is then extracted from the pin using pin tool #3 and the frit extraction tool (see Figure 13). When using the impactor-coupler assembly, the frit is removed from the coupler seat using pin tool #3 and the "out" frit removal tool (see Figure 13). Put frit in covered dish and set aside for chemical extraction.

15.4 Remove the denuders from the couplers and cover each end of the denuders with clean end caps until extraction.

15.5 Label a clean 100 mL polyethylene bottle with the sampler ID number and filter type (i.e., Teflon® or Nylasorb®, as appropriate) for each of the filters.

15.6 Disassemble the filter pack in a clean, ammonia-free air hood. Clean all hood surfaces and utensils with methanol. Wearing clean gloves and using clean filter forceps, remove the filters and place each in its storage (protective) bottle, with the exposed filter surface facing downward, until extraction.

[Note: Place the filters in the properly labeled bottles.]

16. Extraction Procedures

[Special precaution: Samples should be analyzed as soon after collection as possible. The solutions and extraction procedures must be prepared and performed on the day of pH analysis.

Extraction must take place in a clean, ammonia-free air hood. The extracts must be processed in the order in which they will be analyzed, so that each sample will have a similar time interval between extraction and analysis. Denuder extracts and filters should be stored in the refrigerator until just prior

to analysis. Samples stored longer than 30 days tend to degrade due to bacteria growth and/or losses to the walls of the extraction vessel.

16.1 Impactor Frit Coating Extraction

16.1.1 Place the impactor (which was removed before denuder extraction) into a small extraction bottle.

16.1.2 Label the bottle appropriately. Pipet 10 mL of impactor extraction solution into the bottle. The solution must cover the surface of the impactor frit.

16.1.3 Close the extraction bottle and place in an ultrasonic bath for 30 min.

16.2 Denuder Extraction

[Note: If the denuder was the first denuder ad equipped with the impactor frit-pin support, insert a clean Teflon® impactor frit-pin without frit in place. Then extract as described below. This procedure is to be followed for each denuder.]

16.2.1 Cap one end of the denuder. Add 5 mL of DDW with a pipet. Cap other end.

16.2.2 Rotate the denuder to wet all surfaces thoroughly with the water. Remove the cap and pour the liquid into a clean 25 mL polyethylene extraction bottle.

16.2.3 Repeat this procedure with a second 5 mL of DDW extract (total extract volume is 10 mL, which is placed into a single bottle).

16.2.4 Replace the extraction bottle cap and label the bottle with the sampler ID number and denuder number and type (as appropriate).

16.3 Filter Extraction

16.3.1 Teflon® Filter Extraction (for pH analysis followed by ion chromatography (IC) analysis)

[Note: Teflon® is not wet by water; therefore, the filter will float on top of aqueous solutions. Solutions and extraction procedures must be prepared and performed on the day of pH analysis. Extraction of the filters must take place in a clean, ammonia-free, air hood. The filters must be processed in the order in which they will be analyzed so that each sample will have a similar time interval between extraction and analysis.]

16.3.1.1 Allow the hood to be flushed with ammonia-free air for at least 5 min before filter extraction. All of the hood surfaces and extraction utensils must be cleaned with a Kimwipe® moistened with ethanol.

16.3.1.2 Pipet 3 mL of 0.0001 N perchloric acid ($HClO_4$) solution into the appropriately labeled extraction vial (4 mL).

[Note: Use $HClO_4$ because it inhibits CO_2 from dissolving into the solution and keeps the organic compounds in solution from dissociating. Both these activities can change the ionic strength of solution.]

16.3.1.3 Place the Teflon® filter in the extraction vial. Cap tightly. Store at 5°C in the dark until ready for analysis.

16.3.1.4 When ready for analysis, the filter must be prepared (within the air hood) in the following manner: Using forceps and gloved hands, lift the filter from the extraction vial. Let the excess solution drain off into the vial. Holding the filter over the extraction vial, and using an automatic pipet, apply 100 ± 5 mL of ethanol to the filter. Add the ethanol slowly to ensure that all portions of the membrane are wet with ethanol. Immerse the filter in the aqueous solution once again. Tap the forceps against the inside of the vial to remove liquid. Tightly replace cap. Put in ultrasonic bath for 15 min total, rotating the rack 90° every 5 min.

[Note: Perchloric acid is used in place of potassium chloride, initially, to prevent interference in the measurements of cations and anions by ion chromatography. Potassium chloride must be added to the portions of the sample extract that are used for pH analysis (the purpose of the salt, final concentration 0.04 M, is to increase the ionic strength and thus to reduce the time for equilibrium of the pH electrode used for measurement). Use the same bottle (freshly opened) of ethanol to extract the Teflon® filters that are used to prepare sulfuric acid standards.]

16.3.1.5 When ready for pH analysis, the extracts are prepared in the order of pH measurement. Inside the air hood, remove the caps from 4 mL extraction vials. Wipe off any drops which may leak onto the outside of the cup.

16.3.1.6 Using gloved hands and a 1 mL automatic pipet, transfer 1 mL of the extract to each of two correspondingly labeled 2 mL cups.

[Note: The first 2 mL cup for each extract has the same I.D.# as the 4 mL cup, and the second 2 mL cup has the same I.D.# with a hyphen (-). This system also is used with the working standards.]

16.3.1.7 After transferring the extracts to the 2 mL cups, recap the 4 mL extract cup. Store the 4 mL cups at 5°C in a refrigerator pending sulfate analysis by IC.

16.3.2 Nylon Filter Extraction.

16.3.2.1 Pipet 10 mL of IC eluent into the appropriately labeled filter vial or bottle with caps.

[Note: Be sure that the filter lies flat on the bottom of the bottle and that all of the filter is covered by the extraction solution.]

16.3.2.2 Replace the bottle's cap and put in an ultrasonic bath for 30 min.

16.3.2.3 Store the bottles in a clean (i.e., pollutant free) refrigerator at 5°C until analysis.

17. Ion Chromatography Analysis

[Note: The analytical procedure described here is not the only appropriate procedure available for quantifying the analytes of interest. An automated system does not have to be used. This particular analytical procedure was chosen because it is presently used by EPA. Modifications to this procedure may be required depending on the intended use of the data; however, any modifications made must be justified to obtain comparable data quality.]

17.1 Standards Preparation

Special Precaution: Storage of these solutions should be no longer than one week. All of the working standard solutions are used to calibrate the IC and are made from reagent grade stock. The crystals are dried overnight in covered petri dishes at 110°C in a vacuum oven prior to preparing the standard solutions. Any yellowish discoloration of the dried crystals indicates decomposition and crystals should be discarded.

17.1.1 Sodium Sulfate Stock Solution.

17.1.1.1 In a clean, calibrated, 1 L flask, add 500 mL of DDW.

17.1.1.2 On weighing paper, weigh out enough reagent (Na_2SO_4) to make the solution 2000 ppm concentration. The target weight is 0.7394 g. Record the gross weight.

[Note: Weigh out slightly more than the target weight because of the adherence of the residual crystals to the weighing paper (the residual left on the paper is generally between 0.1 mg and 1 g).]

17.1.1.3 Add the reagent crystals to the 500 mL of DDW. Reweigh weighing paper and subtract weight from the gross weight. The difference is the actual net weight.

17.1.1.4 Using a proportion, calculate the actual volume needed to make the solution 2000 ppm (see below).

target wt/actual net wt = 500 mL (target)/actual volume

or

actual volume = (500 mL * actual net wt)/target wt

17.1.1.5 Using the appropriate calibrated pipet, add the amount of DDW needed to achieve the calculated actual volume. Mix well and cover with parafilm.

17.1.2 Sodium Nitrate Stock Solution.

17.1.2.1 In a clean, calibrated, 1 L flask, add 500 mL of DDW.

17.1.2.2 On weighing paper, weigh out enough reagent ($NaNO_3$) to make the solution 2000 ppm concentration. The target weight is 0.6854 g. Record the gross weight.

[Note: Weigh out slightly more than the target weight because of the adherence of residual crystals to the weighing paper.]

17.1.2.3 Follow Sections 17.1.1.3 through 17.1.1.5.

17.1.3 Sodium Nitrite Stock Solution.

17.1.3.1 In a clean, calibrated, 1 L flask, add 500 mL of DDW.

17.1.3.2 On weighing paper, weigh out enough reagent ($NaNO_2$) to make the solution 1000 ppm concentration. The target weight is 0.7499 g. Record the gross weight.

[Note: Weigh out slightly more than the target weight because of the adherence of residual crystals to the weighing paper.]

17.1.3.3 Follow Sections 17.1.1.3 through 17.1.1.5.

17.1.4 Standard working solutions. The working solutions are made as follows: Add 10 mL each of the three stock solutions (Na_2SO_4, $NaNO_3$, and $NaNO_2$) to a 200 mL volumetric flask and dilute to the mark with DDW. Subsequent dilutions are carried out using a 10 mL volumetric pipet and

appropriate flasks. Standards of 20, 10, 5 and 1 ppm Na_2SO_4 and $NaNO_3$ (and one-half these concentrations of $NaNO_2$) are prepared to calibrate the IC.

17.2 Reagent Preparation

[Note: Storage of these reagents should be no longer than 1 week.]

17.2.1 Anion eluent. The anion eluent is a solution of 1.8 μm Na_2CO_3 and 1.7 μm $NaHCO_3$. A concentrated solution can be prepared and diluted as needed.

[Note: See Anion Storage Solution]

17.2.1.1 Concentrated Na_2CO_3 solution (0.36 M). Weigh out 38.156 g of Na_2CO_3 (MW = 105.99). Dissolve into 1 L of DDW. Store in refrigerator until ready to dilute.

17.2.1.2 Concentrated $NaHCO_3$ solution (0.34 M). Weigh out 28.564 g of $NaHCO_3$ (MW = 84.01). Dissolve into 1 L of DDW. Store in refrigerator until ready to dilute.

17.2.1.3 Dilution of stock solutions. Bring both solutions to room temperature. Accurately pipet 10 mL of each solution into a 2000 mL volumetric flask which has been partially filled with DDW. Bring to the mark with DDW (1:200 dilution).

17.2.2 Anion regenerant. The regenerant is a 0.025 N H_2SO_4 solution. VERY CAREFULLY dispense 2.8 mL of concentrated Ultrex sulfuric acid (36 N) into a graduated cylinder. Partially fill the regenerant reservoir with DDW (3 L). Slowly add the acid to the regenerant reservoir. Bring to the mark with DDW (4 L).

[Note: Protective clothing and eye protection should be worn.]

17.2.3 Cation eluent. There are two cation eluents that are used for the analysis of monovalent and divalent cations. The strong cation eluent is: 48 μm HCl, 4 μm DAP.HCl, 4 μm Histidine.HCl (DAP = Diaminoproprionic acid). The weak eluent consists of 12 μm HCl, 0.25 μm DAP.HCl, 0.25 μm Histidine.HCl.

17.2.3.1 Strong cation eluent. Weigh 0.560 g DAP and 0.840 g histidine into a 1 L volumetric flask. Add 48 mL of 1 M HCl (Ultrex) to the flask. Bring the eluent to the final volume by bringing to the mark with DDW. Mix thoroughly to dissolve.

17.2.3.2 Weak cation eluent. Place 63 mL of the strong cation eluent in a 1 L flask. Add 9 mL of 1 M HCl to the flask. Bring the eluent to the final volume by bringing to the mark with DDW. Mix thoroughly to dissolve.

17.2.4 Cation regenerant. The cation regenerant consists of 100 μM Tetrabutylammoniumhydroxide (TBAOH). Place the TBAOH container into a warm water bath to dissolve any crystals that may have formed. Measure 266.7 mL of the TBAOH (stock reagent is supplied as 1.5 M, 40% in water) into a graduated cylinder. Add the TBAOH to 4 L of DDW.

17.2.5 Anion storage solution. Since the anion columns contain carbonates from the eluent, protection must be taken against microorganisms that will live on this food source and clog up the columns. If the columns are not being used for long periods of time (>2 weeks), a storage solution of 0.1 M NaOH should be pumped into them.

17.3 Sample Preparation

17.3.1 Mark the auto sampler vials with the appropriate identification numbers. Place the vials in an (IC) autosampler tray.

17.3.2 Using clean, calibrated 0.5 mL pipets, transfer the denuder and the remainder of the filter extracts from the extraction vials to a clean disposable 0.5 mL (IC) autosampler (polyethylene) vial. Fill the autosampler vial to the line on the side.

[Note: If refrigerated, the contents of the 4 mL extraction vial must be vortex-mixed prior to transfer to the autosampler vials.]

17.3.3 Place black filter caps on top of the vials. Use the tool provided to push the caps into the vials until they are flush with the top. (see the IC manual for more detailed instructions).

17.3.4 Wipe away any excess fluid from the top of the vial to avoid contamination from other samples.

17.3.5 After all of the trays are filled, place them into the left side of the autosampler. The white dot on the tray indicates the first sample. Press the button labeled RUN/HOLD to the RUN position. The trays should move until the first sample is under the sampling head. The front panel should indicate a READY message. Press local/remove switch to remove.

17.4 Basic System Operations - Start-up and Shut-down

17.4.1 Start-up Procedure for Ion Chromatograph.

17.4.1.1 The major components of the Dionex 2020i Ion Chromatography system are illustrated in Figure 15. Turn helium and nitrogen tanks on by opening the valve on top of each tank. (Pressure in either tank should not be less than 500 psi. Replace if necessary.) Open valves at the outlet end of both regulators. Adjust pressure on the nitrogen regulator to 100 psi. Adjust pressure on the helium regulator to 14 psi.

17.4.1.2 Check the level of eluents and regenerating solutions. Turn the chromatography (CMA) values for the anion channel switch ON. Verify that the pressure reading on the face of the degassing unit is 7 psi. Adjust by turning dial next to pressure gauge. Turn the degas switch to HIGH.

17.4.1.3 Turn the eluent reservoir switches, corresponding to the eluents to be degassed, to the ON position. Let the eluents degas on HIGH for 3-5 min, then turn degas switch to LOW.

17.4.1.4 Select the appropriate program on the gradient pump module using the PROGRAM switch. (Programs are recalled from memory by first pressing the PROGRAM switch, then the single digit reference number corresponding to the appropriate program.)

17.4.1.5 Prime the eluent lines.

[Note: All of the eluent lines used during analysis must be primed to remove any air bubbles that may be present. The selected program identifies which lines are used.]

- Open the gradient pump drawer. Turn the pump to the START position for 10 s, or until a CLICK is heard. Turn the pump OFF. This step opens the valve to the eluent line displayed on the front panel.
- Attach a 10 mL syringe to the priming block on the face of the gradient pump module. With the priming block valve closed, pull the syringe plunger out to the end of the syringe.

- Open the priming block valve. The syringe will quickly fill with eluent. Close the valve on the priming block when the syringe is almost full. Remove syringe from block and discard collected eluant.

This priming procedure can be repeated if necessary. All of the eluent lines that are to be used during a day of analysis should be primed at this time.

17.4.1.6 Open the door of the Advanced Chromatography Module. On the back of the door, at the bottom, is the conductivity detector. Four labeled lines (anion, cation, waste, and cell) are located next to the cell. The plumbing must be configured according to the type of analysis to be performed. If anions are being analyzed, attach the ANION line to the CELL line, and the CATION line to the WASTE line. If cations are being analyzed, attach the CATION line to the CELL line, and the ANION line to the WASTE line. Attach the line coming from the pump to the correct port on the advanced chromatography module. SYSTEM 1 on the left is for anions; SYSTEM 2 on the right is for cations.

[Note: If switching from one system to the other, the pump and the lines coming from the pump must be purged of the original eluent, which is done by disconnecting the pump line from the chromatograph module, turning the pump on, and running the new eluent into a waste beaker for 2-3 min.]

17.4.1.7 Select the columns to be used (labeled pH or NO_2) by pressing the blue button located below the labels. To verify that the correct columns are being used, press the switch should at least once, and then set to the appropriate position.

17.4.1.8 Turn the power switch on the autosampler ON (switch is located on the back of the unit, on the right). The default settings will be displayed on the front panel. Attach the SAMPLE OUT line from the autosampler to the advanced chromatography module. The connection should be made to the port marked SAMPLE of the appropriate system. Turn the pump to START.

17.4.1.9 Turn the conductivity cell ON (switch is located on the gradient pump module). Turn the REGEN switch for the appropriate system ON. Verify that regenerant is flowing by inspecting the regenerant waste line which empties into the sink. Open the advanced chromatography module door and inspect for leaks at columns, fittings, etc. Shut pump off if leaks are found.

17.4.1.10 Turn stripchart recorder ON. Baseline should stabilize in less than 20 min. If baseline is not stable, see troubleshooting Section 17.5 for assistance.

17.4.2 Data acquisition start-up. The following is a description of the current data acquisition program used by the EPA. The program is available (EPA, Atmospheric Chemistry and Physics Division, Office of Research and Development, Research Triangle Park, NC) and is for IBM or IBM compatible computers. Other appropriately designed programs may be used to compile the data collected for any given sampling network. A computer programmed integrator does not need to be used to compute the data, but is recommended for large sampling networks.

17.4.2.1 Turn on the IBM XT computer. From the C:>prompt, type: cd/cchart, then type: cchart. This loads the Chromatochart software. Turn switch on relay box to ENABLE, indicator light could go on.

17.4.2.2 Press F2 to enter the methods development module. Select option number 1 - "select channel # and load method file." "Select channel # <0>" type 0 or press ENTER to select the default choice shown in the brackets (in this case 0). "Load method file named" type the name of the appropriate method, then press ENTER. A directory of all of the current methods in memory can be obtained by pressing the F2 function key.

17.4.2.3 Press F3 to enter the Data Acquisition module. At this point you will be asked to save the method file. If there has not been any changes to the methods file, it does not need to be saved. Select option #4 - "Collect Data." Press ENTER to deactivate the method queue. "Load Run Queue named," type the name of the run queue if one has been created. Type ENTER to deactivate the run queue.

17.4.2.4 "Total # runs for method <1>," type how many times the method is to be repeated (total number of samples). "Autoanalyze Data" type Y. "Autosave data to disc" type Y. "Data file name (xxxxx) change?", type data file name. "Press ENTER to begin methods." Press ENTER only after the samples have been loaded into the autosampler and the baseline has stabilized.

17.4.2.5 Figure 16 illustrates the chromatograms for each of the samples as output by the programmed Spectra-Physics integrator. The program used to generate these outputs can be found in the Appendix of this method. Note that actual output is by individual run. Most information provided here is optional to the operator.

17.4.3 Calibration of IC. The instrument should be brought to normal conditions with a warm-up time of at least 30 min.

17.4.3.1 With the "Reading" light on, check to ensure the flow rate is 1.5 mLs/minute, the fluid pressure is 600 psi ± 100 psi and the conductivity is constant as measured by offset difference.

17.4.3.2 Fill the IC vials with the prepared standard solutions and (10, 5 and 1 ppm Na_2SO_4 and $NaNO_3$) and pure eluent. This will allow a four-point calibration curve to be made.

[Note: For low-level applications, more standards and blanks may be necessary in order to obtain accurate reference curves.]

17.4.3.3 Load the four vials into the sample vial holder and place the holder in the automated sampler tray.

17.4.3.4 The tray is controlled by a Spectra-Physics SP4200 or SP4270 Computer Integrator. Use the integrators operation manual to begin calibrating. (A typical program in Basic for integrators that illustrates integrator capability is shown in the Appendix of this procedure.) By using the RUN command, the analysis and data treatment phases of the calibration are set in motion. Four calibration standards are run, the chromatograms and peak areas displayed for each run, and the run results for each anion are fitted to a quadratic curve by a least squares regression calculation. The three curves are plotted and the correlation coefficients are calculated. The values of the coefficients are normally greater than 0.999, where 1.000 indicates a perfect fit. Values of less than 0.99 indicate the calibration procedure should be repeated.

[Note: Recalibration should be carried out whenever standard concentrations show consistently high or low results relative to the calibration curve is compared to the calibration curve from the old standards. Comparability of points should be within ± 0.1 ppm or ± 10%. For standard concentrations of greater than 1 ppm, comparability will normally be within 5% or better. Old standards are assumed correct since they are referenced to the entire historical series of previous standard solutions all of which are comparable.]

17.4.4 System Shut-down.

17.4.4.1 Shut off the pump. Turn the REGEN switch and the conductivity cell to the OFF position.

17.4.4.2 Switch the eluent degas switch to HIGH.

17.4.4.3 Turn the stripchart recorder OFF. Cap the pen. Press the F10 function key on the computer. Select option 3 to exit to DOS. Shut off the printer and the computer.

17.4.4.4 Shut the eluent degas system and reservoir switches and the autosampler to the OFF position. Close the valves on both gas cylinders. Close the regulator valves.

17.5 Basic Troubleshooting

Before proceeding with the troubleshooting guide, make sure the reagents used were prepared correctly and are not "old."

17.5.1 Unstable Baselines

17.5.1.1 Wavy baseline. The most common reason for a wavy baseline is an air bubble in the gradient pump. This problem is diagnosed by observing the pump head indicator lights on the gradient pump module front panel. If the baseline is pulsing in phases with pump pistons, a bubble is usually present. Other possibilities include a dirty or stuck check valve, piston seal or "O"-ring, as well as an air bubble in the conductivity cell.

17.5.1.2 Drifting baseline. Steadily increasing or decreasing baselines usually indicate that the suppressor column is not performing as it should. Parameters to change include the regenerant and eluent concentrations and flow rates. Check temperature routinely, as changes in temperature can cause drifting. Balancing these should stabilize the baseline if the suppressor is functioning correctly. The Dionex manual describes clean-up procedures if the suppressor is believed to be contaminated.

17.5.1.3 High baselines. As with drifting baselines, the parameters to change are eluent and regenerant concentrations and flow rates. A high baseline usually indicates that there is not enough baseline suppression; this condition can be controlled by increasing the regenerant flow rate.

17.5.1.4 Low baselines. Low baselines usually indicate that there is too much suppression, which can be controlled by decreasing the flow of the regenerant.

17.5.2 Backpressure. Variations in system backpressure are common and should not raise concern UNLESS the pressure change is greater than 200 psi.

17.5.2.1 High backpressure. The system is protected from pressure related damage through the high and low pressure alarm settings on the front panel of the gradient pump module. If the high pressure setting is correctly selected (200 psi above normal operating range), the pump will automatically shut-off if this value is exceeded. The reason for high backpressure is blockage in the system. Possibilities include loading against a closed valve, a plugged line, contaminated columns, etc. Diagnosis is done by removing one component of the system and observing how the pressure changes.

17.5.2.2 Low pressure. Low pressure readings usually indicate a leak somewhere in the system. Carefully check all fittings for leaks. Tighten if necessary.

17.5.3 Flow

17.5.3.1 Regenerant lines. If there is no flow at the waste outlet end of the regenerant line, check the following:

- Make sure the correct regenerant switch is turned on
- Verify that the reservoir is not empty
- Make sure the nitrogen tank is turned on
- Check that the regulator is correctly set

17.5.3.2 Eluent lines. If there is no flow at the outlet end of the eluent lines, check the following:

- Check that the pump is on
- Check that the eluent lines are connected to the correct port

17.5.4 Software. Refer to the ChromatoChart manual for detailed information on software problems.

18. Ammonia Analysis by Technicon Autoanalysis

Presented in Sections 18.1 and 18.2 are the recipes for the standards and reagents required to analyze the ammonium ion (NH_4^+ - or ammonia (NH_3)) by Technicon autoanalysis. The prelude of these Sections briefly describes the TRAACS 800 autoanalyzer and the sample flow through the TRAACS 800 for NH_4^+ analysis. This instrument is capable of quantifying, from a single sample, three different species simultaneously. An aliquot of the sample is taken from an automated sampler by syringe. A splitter divides the aliquot into the appropriate volumes required for the particular analyses. Each of the volumes is then transferred to the appropriate analytical cartridge. Sample flow diagrams that illustrate $SO_4^=$, NO_3^- and NH_4^+ analysis can be shown separately and independently of one another. The data computation (by computer) and quality assurance protocols, however, can not be readily adapted to single-channel instruments. These protocols need to be specific to the individual analytical instrument. In brief, NH_4^+ analysis is illustrated in Figure 17. The samples, along with all standards, are taken from the auto-advance sampler tray by the use of a proportioning pump and automated syringe. Air and EDTA are first added to the samples and are mixed in the first set of coils. After mixing, phenolate is added and mixed in the next set of coils. Nitroprusside is then added and mixed, followed by the addition and mixing of hypochlorite. At this stage, the sample should be a bright blue color. After the last mixing stage, the sample is sent through a heated bath, followed by another mixing stage. Finally, the sample is sent through a colorimeter where the results are recorded on a digital printer and stored in a computer file for further manipulation.

18.1 Standards and Stock Solutions Preparation

[Note: Before discarding the old solution, it should be checked against the fresh solution by comparing calibration curves on the working solutions prepared from them. Slopes and intercepts are calculated for each set of standards. The old slope and intercept are used to calculate concentration values from readings for the new standards. This calculation determines if the old solution has deteriorated or if an error has been made in preparing the new solution.]

18.1.1 Ammonium Solution Standard (1,000 μg/mL). Dry ammonium chloride in an oven for 1 h at 50-60°C and desiccate over silica gel for 1 h. Weigh 2.9470 g ammonium chloride and dissolve in 800 mL DDW. Dilute to 1 L with DDW and mix thoroughly. This solution is stable for 1 y.

18.1.2 Intermediate Ammonium Standards. To make a 100 μg/mL ammonium standard, pipet 10 mL of ammonium stock standard into a 100 mL volumetric flask. Dilute to volume with DDW and mix thoroughly. Keep refrigerated. This solution remains stable for 1 month. To make a 10 μg/mL ammonium standard, pipet 1.0 mL of ammonium stock standard into a 100 mL volumetric flask. Dilute to volume with DDW and mix thoroughly. This solution remains stable for one week.

18.1.3 Working Ammonium Standards in DDW. Pipet aliquots of the 100 μg/mL ammonium intermediate standards with appropriate volumes of nitrate and sulfate intermediate standards into 100 mL volumetric flasks according to the table below. Dilute to volume with DDW. Prepare fresh daily.

Standard	Stock or intermediate standard, µg/mL	Aliquot, mL	Concentration, µg/mL
A	1,000	40.0	40.0
B	100	4.0	4.0
C	100	3.0	3.0
D	100	2.0	2.0
E	100	1.0	1.0
F	100	0.5	0.5
G	10	2.0	0.2
H	10	1.0	0.1

18.1.4 Sodium Citrate Stock Solution. Dissolve 294.1 g of sodium citrate in 800 mL DDW. Dilute to 1 L and mix thoroughly. Store at room temperature.

18.1.5 20% Citric Acid/5% Glycerol Stock Solution. Dissolve 25 g citric acid in 80 mL DDW. Add 5 mL glycerol and dilute to 100 mL with DDW. Mix thoroughly and store at room temperature.

18.1.6 Sodium Citrate/Citric Acid/Glycerol Working Solution. Pour 100 mL sodium citrate stock solution into a 1000 mL volumetric flask. Add 20 mL of the 10% citric acid/5% glycerol stock solution and dilute to volume with DDW. Mix thoroughly and store at room temperature.

[Note: This solution will be used to make ammonium working standards for citric acid/glycerol-impregnated filter extract analyses.]

18.1.7 Working Ammonium Standards in Sodium Citrate/Citric Acid/Glycerol Working Solution. Pipet aliquots of the 100 µg/mL volumetric flasks according to the table in Section 18.1.3. Dilute to volume with sodium citrate/citric acid/glycerol working solution and mix thoroughly. Prepare fresh daily.

18.1.8 Potassium Chloride Stock Solution. Dissolve 74.6 g potassium chloride in 800 mL DDW. Dilute to 1 L with DDW and mix thoroughly. Store at room temperature.

18.1.9 Potassium Chloride Working Solution. Put 100 mL of the potassium chloride stock solution into a 1000 mL volumetric flask. Dilute to volume with DDW.

18.1.10 Working Ammonium Standards in Potassium Chloride Working Solution. Pipet aliquots of the 100 µg/mL ammonium stock standard or intermediate standards into 100 mL volumetric flasks according to the table below. Dilute to volume with potassium chloride working solution and mix thoroughly. Prepare fresh daily.

Standard	Stock or intermediate standard, µg/mL	Aliquot, mL	Concentration, µg/mL
A	1,000	40.0	40.0
B	100	4.0	4.0
C	100	3.0	3.0
D	100	2.0	2.0
E	100	1.0	1.0
F	100	0.5	0.5
G	10	1.0	0.1
H	10	0.5	0.005

18.2 Reagent Preparation

[Note: When reagents are prepared, label the container with the contents, concentration, date prepared, and the preparer's initials.]

18.2.1 Alkaline Phenol. Add 83.0 g loose crystallized phenol to 800 mL DDW in a 1 L volumetric flask. Keeping the flask in an ice bath or under tap water, slowly add 96.0 mL 50% sodium hydroxide solution. Shake the flask while adding the sodium hydroxide. Cool to room temperature, dilute to 1 L with DDW, and mix thoroughly. Store in an amber glass container. This solution will remain stable for 3 mo, if kept out of direct light.

18.2.2 Sodium Hypochlorite Solution. The amount of sodium hypochlorite solution varies from batch to batch of sodium hypochlorite (5% commercial grade). Therefore, for each new batch, a base and gain experiment must be run to adjust the amount of sodium hypochlorite required to obtain the existing base and gain values. In a 150 mL volumetric flask, dilute 86 mL of 5% sodium hypochlorite solution to 100 mL with DDW and mix thoroughly. Check base and gain values. Reduce or increase the amount of sodium hypochlorite to obtain the same base and gain values as the previous sodium hypochlorite batch. This solution remains stable for 1 day.

18.2.3 Sodium Nitroprusside Solution. Dissolve 1.1 g of sodium nitroprusside in about 600 mL of DDW, dilute to 1 L with DDW, and mix thoroughly. Store in an amber container and keep in refrigerator. This solution remains stable for 1 month, if kept out of direct light.

18.2.4 Disodium EDTA Solution. Dissolve 1.0 mL of 50% w/w sodium hydroxide and 41.0 g of disodium EDTA mix thoroughly. Add 3.0 mL of Brij-35 and mix. Store in plastic container. This solution will remain stable for 6 months.

19. pH Analysis

19.1 Standard and Reagent Preparation

[Note: Each of the standard H_2SO_4 stock solutions must be prepared fresh the day of pH analysis.]

19.1.1 Standard H_2SO_4 Solution.

19.1.1.1 Label seven 25 mL polyethylene stoppered volumetric flasks. Also, label each flask with the volume of 1 N H_2SO_4 solution indicated in the following table:

Standard H_2SO_4, Flask No.	Volume of 1.000 N H_2SO_4 added to each flask, μL	Standard concentration, 10^{-3}N H_2SO_4
1	0	0
2	25	1
3	50	2
4	100	4
5	200	8
6	400	16
7	800	32

19.1.1.2 Use the 25 μL automatic pipet to add 1 N stock H_2SO_4 to flasks #1-3. Use the 100 μL pipet to add 1 N stock H_2SO_4 to flasks #4-7. Dilute all flasks to the 25 mL mark with absolute ethanol. Cap with stoppers or parafilm and mix well.

19.1.2 2 M Potassium Chloride (KCl) Solution.

19.1.2.1 Weigh 149.2 ± 0.1 g of KCl. Add the KCl to a 2 L flask.

19.1.2.2 Add about 700 mL of DDW water to the flask. Swirl the solution until the KCl is completely dissolved.

19.1.2.3 Pour this mixture into a 1 L graduated cylinder. Rinse the flask with a small amount of water and transfer the rinse into the cylinder. Fill the cylinder to the 1 L mark.

19.1.2.4 Pour the solution from the cylinder into the 1 L polyethylene bottle. Cap and shake the bottle to mix well. Mark the bottle with date of preparation.

19.1.3 0.1 N Perchloric Acid ($HClO_4$) Solution.

19.1.3.1 Fill a 1 L graduated cylinder about 1/2 full with DDW. Transfer 10 ± 0.1 mL of 60-62% $HC1O_4$ into the 1 L cylinder with a 10 mL pipet.

19.1.3.2 Fill the cylinder to the 1 L mark. Pour the solution into the 1 L polyethylene bottle.

19.1.3.3 Cap and shake the bottle to mix well. Mark the date of preparation on the bottle.

19.1.4 0.01 N $HClO_4$ Solution.

19.1.4.1 Fill a 1 L graduated cylinder about 1/2 full with DDW.

19.1.4.2 Measure 100 mL of the 0.1 N $HC1O_4$ solution with the 100 mL graduated cylinder. Add solution to the 1 L cylinder.

19.1.4.3 Fill a 1 L cylinder with DDW to the 1 L mark. Pour the solution into the 1 L polyethylene bottle.

19.1.4.4 Cap and shake the bottle to mix well. Mark the date of preparation on the bottle.

19.1.5 Extraction Solution (ES).

[Note: This solution has the same composition as the solution used to fill the sample vials for Teflon® filters. It must be prepared fresh on the day of pH analysis.]

19.1.5.1 Measure 100 ± 10 mL of DDW into a 1 L graduated cylinder. Transfer to a 2 L erlenmeyer flask.

19.1.5.2 Using a 5 mL calibrated automatic pipet, add 10 ± 0.1 mL of 0.01 N perchloric acid ($HClO_4$) to flask of water.

19.1.5.3 Mix well and cover with parafilm until ready for use.

19.1.6 EA Solution.

19.1.6.1 Measure 150 ± 2 mL of ES (prepared in Section 18.1.5) into a 250 mL graduated cylinder. Transfer to a 250 mL erlenmeyer flask.

19.1.6.2 Using a 5 mL graduated cylinder, add 5 ± 0.1 mL of ethanol (from the same fresh bottle of ethanol that was used to prepare the standards in 18.1.1) to the flask.

19.1.6.3 Again using a 5 mL graduated cylinder, add 3 ± 0.1 mL of 2 M potassium chloride (KCl) solution to the flask.

19.1.6.4 Mix well and cover with parafilm until ready for use.

19.1.7 Working Standard Test Solutions.

19.1.7.1 Place fourteen-4 mL polystyrene sample cups (as used with Technicon Auto-Analyzer II system) labeled 1, 1*, 2, 2*...7, 7* into racks. Using the calibrated dispensing pipet bottle, add 3 mL of ES solution to each 4 mL cup.

19.1.7.2 Using the displacement pipet, add 50 uL of absolute ethanol to each cup. Pour about 3 mL of standard (H_2SO_4 solution) #1 into a labeled 4 mL cup.

19.1.7.3 Immediately pipet 50 uL of this standard into the 4 mL cups labeled 1 and 1* containing the ES solution and ethanol.

[Note: This transfer must be done without delay to prevent the standard concentration from increasing significantly due to evaporation of the ethanol solvent.]

19.1.7.4 Repeat the procedure for each of the other 6 standards. If there is a delay of more than 5 min between the preparation of these mixtures and the next step, put caps on the 4 mL cups.

19.1.7.5 To prepare for analysis, mix each mixture. Then transfer two aliquots from each cup to 2 mL sample cups. Place cup #1 in a rack. In a second rack place two-2 mL cups labeled 1 and 1-. Use the 1 mL automatic pipet to mix the contents of 4 mL cup #1 by drawing 1 mL into the pipet tip and then dispensing it back into the 4 mL cup three times. Use the same pipet to transfer 1 mL of the mixture to each of the two labeled 2 mL cups. Place caps on the two 2 mL cups. After transferring the two aliquots to 2 mL cups, rinse the automatic pipet tip in a flask of DDW. Repeat the transfer procedure for each of the other working standard pairs.

19.2 Calibration of pH Meter

The pH meter requires temperature calibration whenever a new electrode is used. Use the manufacture's procedure in the instrument manual. This calibration should be repeated every 3 months when not in use. The pH meter is left with the power cord plugged into the AC outlet, the mode control knob is left in the standby position, the electrode lead is partially disconnected by pressing the plastic ring on its outer edge, and the combination electrode is immersed in a 4 M KCl solution (a slit rubber stopper seals the bottle with the electrode in it). Keep a record of the temperature calibrations in a lab notebook.

19.3 Pre-Analysis Calibration

[Note: The pH buffer solutions are not used for any quantitative purpose. They are used to standardize the electrode and as a diagnostic to verify that the pH measurement system is working as expected before beginning analysis of the samples.]

19.3.1 Use a pH Analytical Log Form to record all date (see Figure 18). While still in standby mode, reconnect the electrode lead at the back of the pH meter.

19.3.2 Fill three 4 mL cups with pH 7 buffer. Withdraw the electrode from the 4 M KCl bottle and wipe the tip gently with a Kimwipe® to remove the bulk of the solution. Rinse the electrode with one cup of pH 7 buffer. Do not test pH of the first cup.

19.3.3 Immerse the electrode in the second cup of the pH 7 buffer. Use a small bottle or other support to hold the cup up to the electrode while waiting for the meter reading to equilibrate.

19.3.4 Test the pH by turning to the pH mode of the meter. Allow the reading to stabilize for at least 30 s. Record the result on the log for "1st cup."

19.3.5 Turn to standby mode, and then test the last cup of pH 7 buffer. Record the results on the log for the "2nd cup." If the pH value for the 2nd cup is not 7.00 ± 0.01, adjust the "calib." knob to obtain a reading of 7.00. Note this adjustment on the log.

19.3.6 Fill three 4 mL cups with pH 4 buffer. With the meter in the standby mode, remove the cup containing pH 7 buffer, wipe the tip of the electrode gently with a Kimwipe® and then rinse the electrode with the first cup of pH 4 buffer.

19.3.7 Test the next two cups of pH 4 buffer as above, recording the results on the log. If the pH value for the 2nd cup is not 4.00 ± 0.01, adjust the "slope" knob to get a reading of 4.00. If the value for the second cup was not 4.00 ± 0.03, the calibrations at pH 7 and at pH 4 must both be repeated.

19.4 pH Test 0.01 N $HClO_4$ Solution

[Note: The 0.01 N $HClO_4$ solution is used to prepare the ES solution, which is used to prepare the EA solution. The pH value for the EA solution must be 4.09 ± 0.04. If this pH value is not achieved, the 0.01 N $HClO_4$ solution must be reprepared.]

19.4.1 Calibrate the pH meter with pH 4 buffer.

19.4.2 Rinse the pH electrode with DDW. Wipe the tip of the electrode with a Kimwipe®.

19.4.3 Fill three 4 mL cups with EA solution. Measure the pH of the test EA solution as with the buffer solutions this value must be 4.09 ± 0.04.

19.4.4 If the above pH value is not achieved, follow the steps outlined in Sections 18.1.3 - 18.1.6 to reprepare the solutions. Test the pH of the new solutions. Repeat as necessary to obtain a pH of 4.09 ± 0.04.

19.4.5 Leave the electrode immersed in the "2nd cup" with the meter in the standby mode until ready to start analysis of the working standards.

19.5 Analysis of Working Standard

[Note: Immediately following the EA analysis, start testing the working standards.]

19.5.1 With the pH meter still in the standby mode, remove the last cup from the electrode, gently wipe the tip with a Kimwipe®, and immerse the electrode into the working standard cup #1.

[Note: Only two cups are available for each working standard (also for filter extracts). Thus, pH measurement is made for both of the two cups for each sample. Also, the electrode tip is not wiped between the 1st and 2nd cups of each sample.]

19.5.2 After testing the pH of cup #1, test cup #1-. Record the results of both on the pH Analytical Log Form.

19.5.3 With the meter in the stand-by mode, remove the #1- sample cup, wipe the electrode with a Kimwipe®, and test one 2 mL cup of EA solution. Rinse with DDW.

19.5.4 Test a 2nd cup of EA solution; record the results for both cups on the logsheet. Discard the 1st cup of EA, but retain the 2nd cup to be used as the 1st cup for the next EA test.

19.5.5 Continue testing the remainder of the working standards, #1*, 1*-, ... 7, 7-, 7*, 7*-. Remember that the electrode tip is wiped before and after each pair of test solutions, but not in between two cups of the same sample.

[Note: If there is trouble obtaining constant pH values, use a magnetic stirrer to keep the contents to be measured uniform. If employed, ensure that the sample cups are insulated from any temperature increase of the stirring platform, which may occur during extended use.]

19.5.6 Use the mode control knob in the "temp." position to measure the temperature of the test solutions every 5-10 samples and record the results on the logsheet.

19.6 Analysis of Filter Extracts

After measuring the pH of the working standards, measure the pH of the filter extracts and record all results on the log. After all the filter extracts have been tested make an additional test with the EA solution. At the end make a final test of pH 4 buffer. With the mode control in the standby mode, shut down the pH meter by disconnecting the electrode lead at the back of the meter, leaving the meter power cord plugged into the AC line. Immerse the electrode tip in the bottle of 4 M KCl.

20. Atmospheric Species Concentration Calculations

The system described in the previous sections collects nitric acid (HNO_3), sulfur dioxide (SO_2), ammonia (NH_3), particulate sulfate ($SO_4^=$), and particulate nitrate (NO_3^-). The collection of each of these species is illustrated in Figure 1. Nitric acid and sulfur dioxide gases are collected on denuders one and two. Some SO_2 gas is collected on denuder three also. Nitrous acid gas is collected on denuders two and three. Ammonia gas is collected on denuder four. Particulate sulfate and nitrate are collected on the first (Teflon)® filter, while some of the particulate nitrate collected on the Teflon® filter evaporates and collects on the second (nylon) filter. Also collected on the Teflon® filter are fine particles that contain hydrogen ions (H^+), though probably not free H^+. Hydrogen ions are most likely present in the H_3O^+ form. The concentration of these H^+ ions indicates the atmospheres acid aerosol content. Prepare the Teflon® filter extracts for pH analysis prior to IC analysis for the particulate sulfate contents. Special precautions must be taken to prevent contamination of the Teflon® filters by ammonia before either of the analyses.

20.1 Assumptions of the Annular Denuder System

A number of assumptions are made about the performance of the annular denuder system so that validity of the calculations presented later in this section will hold true. As discussed in Section 6, significant interferences need to be considered to make accurate estimations of species concentrations. The assumptions are as follows:

- The first denuder stage collects 100% of sampled HNO_3 as nitrate. (Since the diffusivity of HNO_3 is high, diffusion to the side walls is assumed to be very quick.)
- The first denuder stage collects 100% of sampled HNO_2 as nitrite, which can oxidize to nitrate.
- The first denuder collects 100% of the SO_2 as sulfite, which can oxidize to sulfate.

[Note: Before analysis, add hydrogen peroxide (H_2O_2) to oxidize the sulfite (SO_3^-) to sulfate ($SO_4^=$) to simplify the calculations.]

- The amounts of nitrite and nitrate collected on denuder 1 represent amounts of interfering gases, such as NO_2, collected on denuder 1.
- The second denuder stage collects 100% of the sampled ammonia (NH_3) as ammonium ion (NH_4^+).
- The Teflon® filter is 100% efficient for particulate sulfate, nitrate, and ammonia. Particle losses are less than 1% on each denuder. This assumption may or may not stand true depending on the concentrations of the components in the air sampled. Modifications may be needed to avoid low (or underestimates of) acidic measurements. For example, another filter stage may need to be added to accurately account for the particulate ammonia content of the air sampled. If ammonium nitrate (NH_4NO_3) was collected on the Teflon® filter, its probability of evaporation is high. Therefore, a citric acid-impregnated filter downstream would correct for the loss from the Teflon® filter. Also, interaction of ammonia and sulfuric acid neutralizes the filter and causes the acidic measurement to be biased. (Again diffusion rules the particle loss assumption; particles have lower diffusivities than gases.)
- The nylon filter collects any nitrate that evaporates from the Teflon® filter.

20.2 Calculations Using Results from IC Analysis

These assumptions lead directly to equations for computing atmospheric concentrations from denuder measurements.

20.2.1 Analytical results are given at NO_3^- in μg/mL, and $SO_4^=$ as μg/mL.

20.2.2 The extraction volume was 10 mL (i.e., 0.010L).

20.2.3 Nitrate concentration converted to equivalent nitric acid:

$$CNO_3^- = [NO_3^-{}_{sample} - NO_3^-{}_{blank}][10\ mL][98/62]$$

$$CSO_4^= = [SO_4^={}_{sample} - SO_4^= blank][10\ mL][100/98]$$

20.3 Calculations Using Results from pH Analysis

Earlier pH determinations have been based on the pH buffer concentrations, the activity of the solution, and the antilog of the measured pH value. More recent studies have steered away from the issue of activity by comparing the results of the standards, thus alleviating errors introduced by basing the activities of ions retained on filters on those retained in solution. The methodology developed from these more recent studies is described herein. The end results are reported in terms of mass of equivalent of ions. Appropriate values of accuracy and precision with respect to H^+ concentration for this method are 10% and 5%, respectively, for sample pH values in the 4.00 to 7.00 range.

20.3.1 Summary of Method. There are two parts to this methodology: determination of the "nominal EQ" and determination of the "actual (EQ_N)." The nominal EQ is defined as the equivalent μg H_2SO_4/m^3 for a nominal 5.76 m^3 sample volume (24 h at 4 LPM). The actual EQ_A is defined as the equivalent μg H_2SO_4/m^3 based on the actual sample air volume.

20.3.1.1 Determine the nominal EQ_N as follows:

20.3.1.1.1 To account for the difference between standards prepared with filters and standards prepared without filters, adjust the measured concentration values for the working standards (without filters) for each analysis day.

20.3.1.1.2 Calculate the standard curve, using a linear regression of the equivalent of μg H_2SO_4/m^3 (for 5.76 m^3 volume of sample) for each working standard vs. the adjusted concentration values for the working standards.

20.3.1.1.3 Use the standard curve to determine EQ_N for each sample filter.

20.3.1.1.4 Calculate the actual air flow rate to determine the actual air sample volume. Divide the actual air sample volume into EQ_N to determine EQ_A.

20.3.1.2 Determine the actual EQ_A as follows:

20.3.1.2.1 The actual sample air volume, V, for each sample is calculated using data from the field log sheet. This data includes the initial and final elapsed time, the initial rotameter reading, and the rotameter I.D. No.

20.3.1.2.2 The calibration curve for the given rotameter reading is used to calculate the flow for the sample (LPM).

20.3.1.2.3 The nominal EQ_N is divided by the calculated flow to give the actual EQ_A.

20.3.2 Adjustment for Filter vs. Non-Filter Standards. This adjustment is necessary because experiments showed that the measured acid concentration from filters doped with H_2SO_4 stock standards yielded concentrations, as measured by the difference from EA solution, that were about 3% lower than

the values found for working standards (prepared without filters from the same stock standards). The results gave the following relation (by linear regression):

$$C_f = -0.11 + 0.971\ (C_{nf})$$

where:

C_f = difference in units of 10^{-5} N, calculated using the pH of each filter standard and the pH of EA tested after that standard.

C_{nf} = the same difference for non-filter standards or the apparent net strong acid concentration of H_2SO_4).

For each working standard (non-filter), on a given analysis day, calculate the "apparent net concentration of H_2SO_4" as follows:

$$C_{nf} = 10^{-pHWS} - 10^{-pHEA}$$

where:

pHWS = measured pH for a working standard (or apparent strong acid concentration for H_2SO_4 - doped filter standards).
pHEA = measured pH for the EA solution (or apparent strong acid concentration for non-filter, non-H_2SO_4 doped standards).

After calculating the C_{nf} values for each working standard, use equation (1) above to calculate the adjusted values of Cf for each.

20.3.3 Determination of Standard Curve. For each working standard, the corresponding EQ_N value (the equivalent of $\mu g\ H_2SO_4/m^3$ [assuming a sample volume of 5.76 m^3]) is determined as follows:

$$EQ_N = m/5.76\ (10^6\ \mu g)/g$$

[Note: 5.76 is the volume for a sample collected for 24 h at 4 LPM, in m^3.]

[Note: The analyst may determine whether concentration or mass is calculated here and used to create the standard curve. If mass is used, a nominal sample air volume is not necessary. The value of m is determined as follows:]

$$m = [1.000]\ [S/25]\ [5 \times 10^{-5}]\ [49]$$

where:

1.000 = concentration of the commercial standard H_2SO_4, in units of equivalents/L.
S = volume of commercial standard H_2SO_4 used to prepare a given stock standard solution, mL.
25 = volume of each stock standard solution, mL.

5×10^{-5} (50 uL) = is the volume of each stock standard solution used to prepare its respective working standard, L.

49 = equivalent weight of H_2SO_4, units of grams/equivalent.

[Note: When the value of S is 1 mL or greater for a final volume of 25 mL, the standard curve illustrates non-linearity.]

An example table of the values of the nominal EQ_N for each working standard is shown in Table 3. For each analysis day, the standard curve should be determined by calculating the linear regression of EQ_N vs. C_f, with the result in the following equation:

$$EQ_N = \text{intercept} + [C_f]\ [\text{slope}]$$

20.3.4 Determination of Nominal EQ_N for Filter Samples. The apparent net strong acid concentration of each sample filter extract, C_s, is calculated as with the working standards:

$$C_s = 10^{-pHS} - 10\text{-}pHEA$$

where:

pHS = measured pH of the sample filter extract (or apparent strong acid concentration for sample filters extracts).

pHEA = measured pH for the EA solution (or apparent strong acid concentration for non-filter, non-H_2SO_4 standards).

[Note: The C_s values for the filter extracts are directly comparable to the C_f values for the working standards, since the C_f values have been adjusted for the difference in apparent acid concentration for tests made with filters and tests made without filters.]

To determine the nominal EQ_N values for filter samples, use the following equation:

$$EQ_N = \text{Intercept} + [C_s]\ [\text{Slope}]$$

20.3.5 Determination of Actual EQ_A. The actual sample air value, V, for each sample is calculated using the data from the field log sheet. These data include the initial and final elapsed times, the initial

rotameter reading, and the rotameter I.D. No. Use the calibration curve for the given rotameter to calculate the flow for the sample, in LPM. Calculate the value of V as follows:

$$V = [F][T]$$

where:

F = flow from the calibration curve, LPM.
T = net elapsed time, min.

Since the nominal EQ_N values were determined assuming a flow of exactly 4 LPM and a net elapsed time of exactly 24 h, the assumed volume was 5.76 m^3; therefore, calculate the value of the "actual EQ_A" by:

$$EQA = [EQ_N]/V$$

where:

EQ_A = units of $\mu g/m^3$

Nominal EQ_N as determined by:

$$EQ_N = m/5.76\ (10^6\ \mu g/g)$$

where:

m = [1.000] [S/25] [5 x 10^{-5}] [49].
1.000 = concentration of commercial standard H_2SO_4, units of equivalents/L.
S = volume of commercial standard H_2SO_4 used to prepare a given stock standard solution mL.
25 = volume of each stock standard solution, mL.
5 x 10^{-5} (50 uL) = volume of each stock standard solution used to prepare its respective working standard, L.
49 = equivalent weight of H_2SO_4, units of grams/equivalent.

Proper dilution rates are indicated on Table 4.

21. Variations of Annular Denuder System Usage

As described in Sections 3 and 4, the ADS is used to measure reactive acidic (SO_2 and HNO_3) and basic (NH_3) gases and strong acidity of atmospheric particles found in ambient air. The unique features of the ADS that separate it from established air monitoring methods are the ability of sampling artifacts to be eliminated from the collected gases and particles and preservation of the samples for subsequent analysis, which is accomplished by removing NH_3 in the gas stream with a citric acid coated denuder, thus reducing the probability of the particulate acid sulfates ($SO_4^{=}$) captured on the Teflon® filter from being neutralized. The ADS configuration described in Section 13 clearly illustrates these unique features. The elutriator is designed to allow only particles with <2.5 μm diameter into the system. The impactor is

designed to reduce the possibility of coarse particle infiltration even further. And finally, the sequence of the denuders reduces interference of possible chemical reactions that could cause under-or over-estimations of concentrations to be made. Although this configuration is recommended for measuring these gases and particulates, the user may wish to measure only one or two of the chemical species. The following discussion will present possible variations of the ADS to accommodate such usages.

21.1 Today, the ADS is being used in intercomparison studies to assess NH_3 concentration differences indoors and outdoors. The assembly used here consists of an elutriator-impactor assembly, an annular denuder, and a filter pack assembly. The elutriator-impactor assembly and the annular denuder are both smaller than those described earlier. The filter pack is available in the smaller size, but an adaptor is also available to assemble the smaller annular denuder to the larger filter pack assembly. This system is referred to as the personal sampler (see Figure 20). It is designed for sampling while attached to the shirt of a worker. The personal sampler can be used to measure other chemical species in indoor air by simply changing the reactive surface (coating) of the annular denuder or the types of filters used.

21.2 Another variation of ADS application is simultaneous use in parallel with a fine particle sampler. The fine particle sampler assembly is very similar to the annular denuder assembly. The main difference is that a flow-straightener tube replaces the annular denuder. The flow-straightener is a shorter version, 1-1/4 to 4" long, of the annular denuder and creates even air flow across the filters to collect particulate matter. Again the elutriator-impactor assembly and flow-straightener are available in smaller sizes with accommodating filter pack assemblies. In addition, the ADS carrying and shipping cases as well as the sampling box can be adjusted to accommodate the ADS and fine particle sampler. The assemblies as they would appear in the sampling box ready for sampling are illustrated in Figure 19.

21.3 If one has interest in quantitations HNO_2 utilizing the ADS, special sampling and analytical concerns must be addressed. As identified in Section 24, Citation 14, guidance is given for accurate quantitation of HNO_2 in ambient air.

22. Method Safety

This procedure may involve hazardous materials, operations, and equipment. This method does not purport to address all of the safety problems associated with its use. The user must establish appropriate safety and health practices and determine the applicability of regulatory limitations prior to the implementation of this procedure. These practices should be part of the user's SOP manual.

23. Performance Criteria and Quality Assurance (QA)

Required quality assurance measures and guidance concerning performance criteria that should be achieved within each laboratory are summarized and provided in the following section.

23.1 Standard Operating Procedures (SOPs)

23.1.1 SOPs should be generated by the users to describe and document the following activities in their laboratory: (1) assembly, calibration, leak check, and operation of the specific sampling system and equipment used; (2) preparation, storage, shipment, and handling of the sampler system; (3) purchase, certification, and transport of standard reference materials; and (4) all aspects of data recording and processing, including lists of computer hardware and software used.

23.1.2 Specific instructions should be provided in the SOPs and should be readily available to and understood by the personnel conducting the monitoring work.

23.2 QA Program

The user should develop, implement, and maintain a quality assurance program to ensure that the sampling system is operating properly and collecting accurate data. Established calibration, operation, and maintenance procedures should be conducted regularly and should be part of the QA program. Calibration procedures provided in Sections 17 and 19, operation procedures in Sections 14 and 17, and maintenance procedures in Section 17 of this method and the manufacturer's instruction manual should be followed and included in the QA program. Additional QA measures (e.g., trouble shooting) and further guidance in maintaining the sampling system are provided by the manufacturer. For detailed guidance in setting up a quality assurance program, the user is referred to the *Code of Federal Regulations* (Section 24, Citation 12) and the *U. S. EPA Handbook on Quality Assurance* (Section 24, Citation 13).

24. References

1. Waldman, J. M., *Operations Manual for the Annular Denuder System Used in the U. S. EPA/RIVM Atmospheric Acidity Study* UMPNJ - Robert Wood Johnson Medical School, Piscataway, NJ, August 28, 1987.

2. American Chemical Society Subcommittee on Environmental Chemistry, "Guidelines for Data Acquisition and Data Quality Evaluation in Environmental Chemistry," *Analyt. Chem.*, Vol. 52:2242-2249, 1980.

3. Sickles, II, J. E., *Sampling and Analytical Methods Development for Dry Deposition Monitoring*, Research Triangle Institute Report No. RTI/2823/00-15F, Research Triangle Institute, Research Triangle Park, NC, July 1987.

4. Forrest, J., and Neuman, L., "Sampling and Analysis of Atmospheric Sulfur Compounds for Isotopic Ratio Studies," *Atmos. Environ.*, Vol. 7:562-573, 1973.

5. Stevens, R. K., et al., ACGIH Symposium: "Inlets, Denuders and Filter Packs to Measure Acidic Inorganic Pollutants in the Atmosphere," Aislomer Conference Center, Pacific Grove, CA, February 16, 1986.

TABLE 2. ACCELERATOR JET DIAMETERS AND CORRESPONDING REYNOLDS NUMBER (RE) FOR SELECTED FLOW RATES TO OBTAIN 2.5 MM AERODYNAMIC D_{50} SEPARATION

Flow rate, L/min	Jet diameter, mm	Reynolds number (RE)
1.0	1.55	900
2.0	1.97	1,400
5.0	2.65	2,700
10.0	3.33	4,200
12.0	3.55	4,700
15.0	3.85	5,500
16.7	4.00	6,000
20.0	4.25	6,600

TABLE 3. SUMMARY OF KEY PROBE SITING CRITERIA FOR ACID AEROSOL MONITORING STATIONS

Factor	Criteria
Vertical spacing above ground	• Representative of the breathing zone and avoiding effects of obstruction, obstacles, and roadway traffic. Height of probe intake above ground in general, 2-3 m above ground and 2-15 m above ground in the case of nearby roadways. • About 1 m or more above the structure where the sampler is located.
Horizontal spacing from obstruction and obstacles	• Minimum horizontal separation from obstructions such as trees is > 20 m from the dripline and 10 m from the dripline when the trees act as an obstruction. • Distance from sampler inlet to an obstacle such as a building must be at least twice the height the obstacle protrudes above the sampler. • If a sampler is located on a roof or other structures, there must be a minimum of 2 m separation from walls, parapets, penthouses, etc. • There must be sufficient separation between the sampler and a furnace or incinerator flue. The separation distance depends on the height and the nature of the emissions involved.
Unrestricted airflow	• Unrestricted airflow must exist in an arc of at least 270 degrees around the sampler, and the predominant wind direction for the monitoring period must be included in the 270 degree arc.
Spacing from roads	• A sufficient separation must exist between the sampler and nearby roadways to avoid the effect of dust re-entrainment and vehicular emissions on the measured air concentrations. • Sampler should be placed at a distance of 5-25 m from the edge of the nearest traffic lane on the roadway depending on the vertical placement of the sampler inlet which could be 2-15 m above ground.

TABLE 4. DILUTION RATES

Standard H_2SO_4 Flask No.	Volume of 1.0 N H_2SO_4 Added to Each Flask, mL	Equivalent Strong Acid Mass Collected on Filter, μg[a]	Equivalent Strong Acid Collected on Filter, $\mu g/m^3$
1	0.000	0	0.00
2	0.025	4.90	0.43
3	0.050	9.80	0.85
4	0.100	19.60	1.70
5	0.200	39.20	3.40
6	0.400	28.40	6.81
7	0.800	156.80	13.61

[a]Based on 6.2 mL extraction volume.

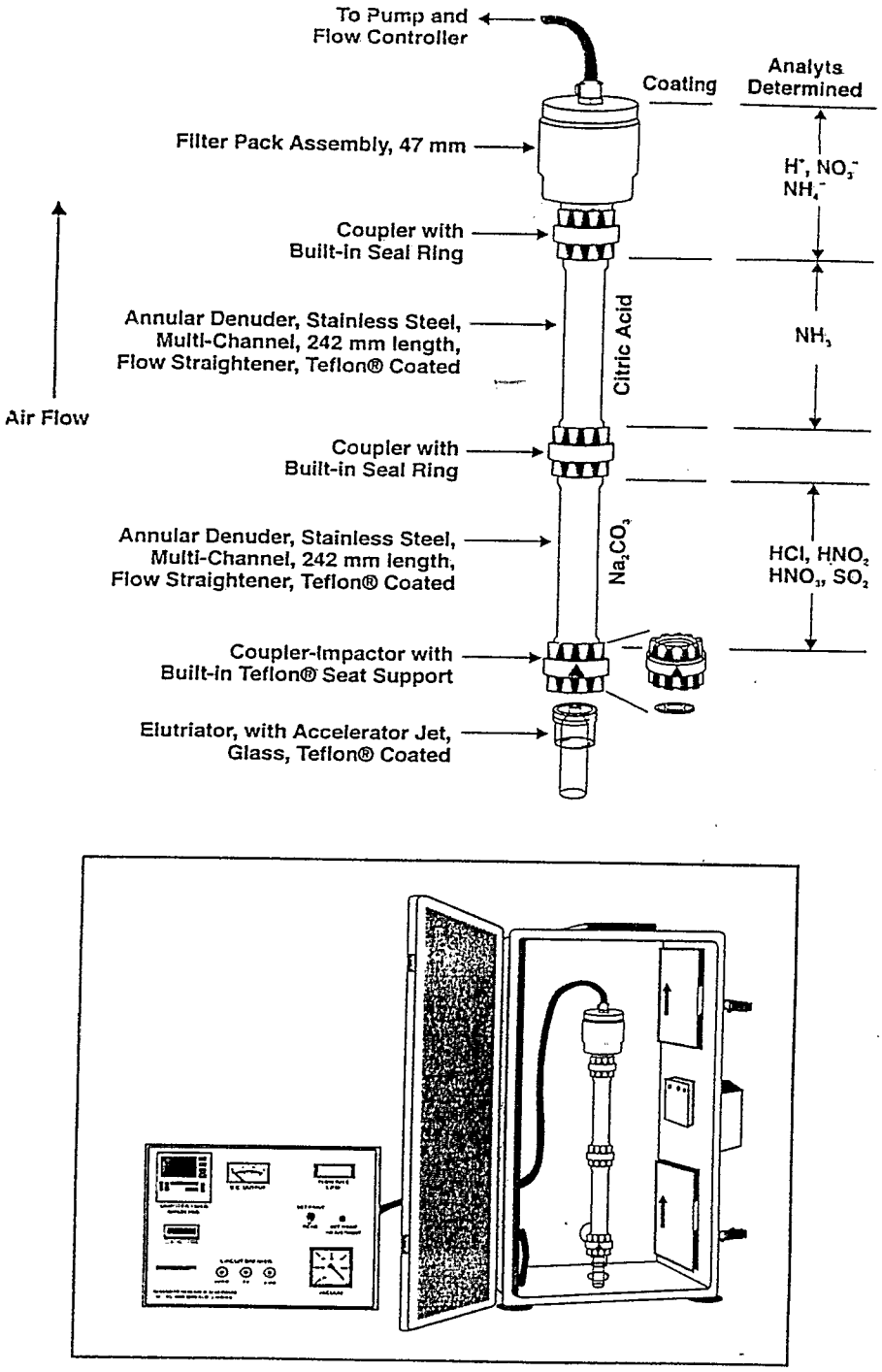

Figure 1. Schematic view of Annular Denuder showing species collected.

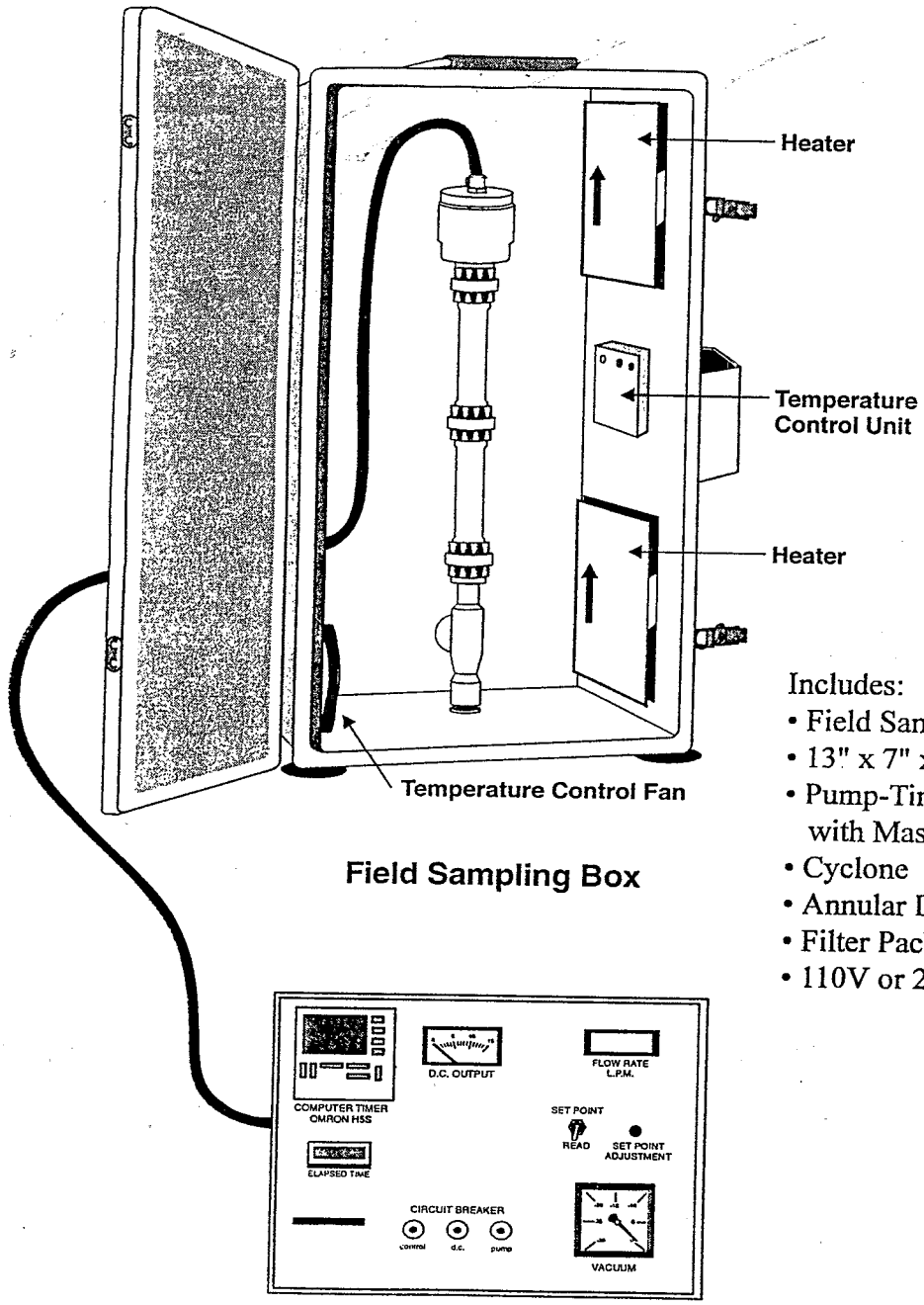

Includes:
- Field Sampling Box
- 13" x 7" x 28" Heated and Cooled
- Pump-Timer System, Single Channel with Mass Flow Controller
- Cyclone
- Annular Denuder
- Filter Pack
- 110V or 220V

Figure 2. Annular Denuder system.

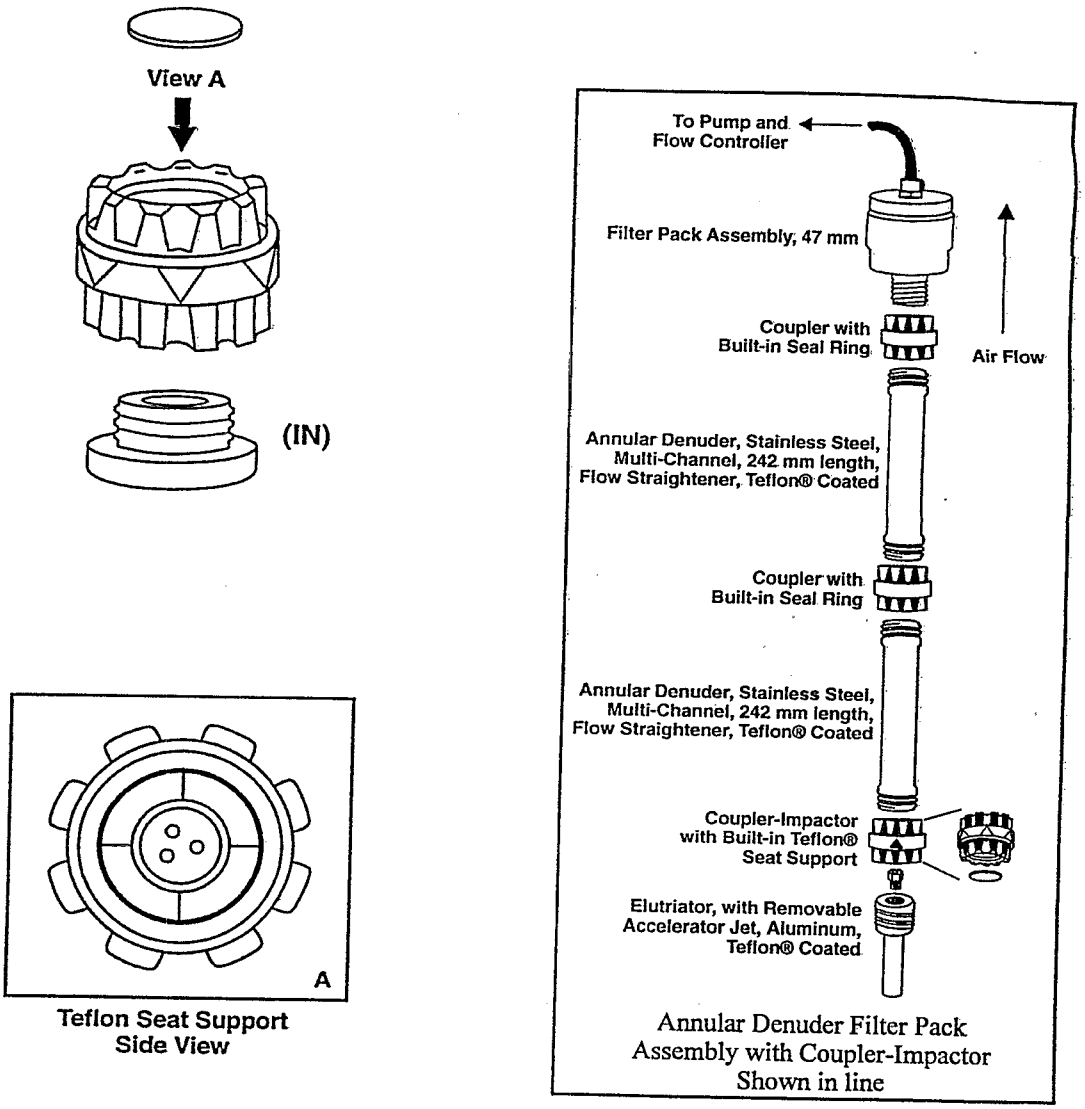

Figure 5. Side view impactor/coupler assembly.

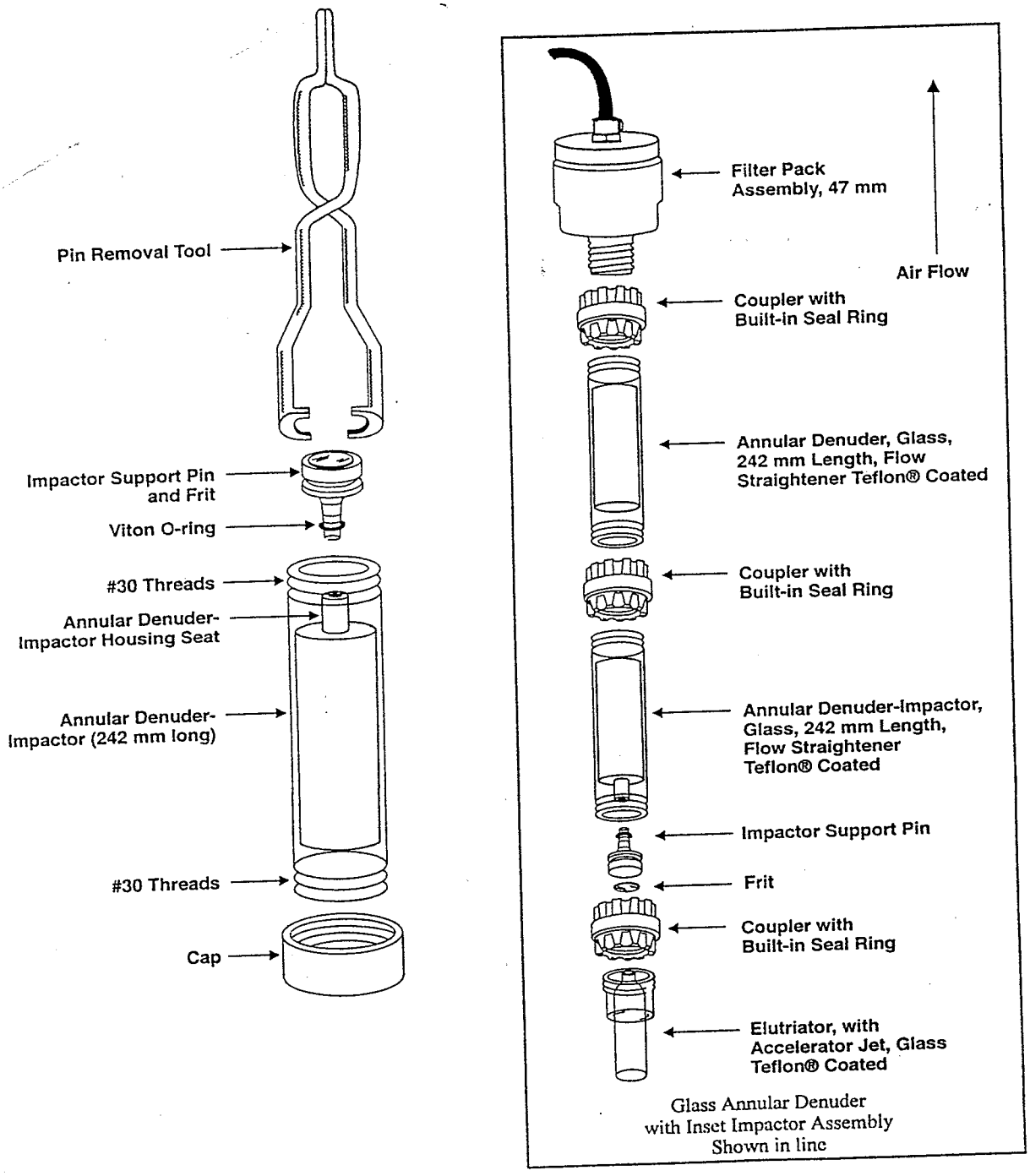

Figure 4. Glass Annular Denuder with inset impactor assembly.

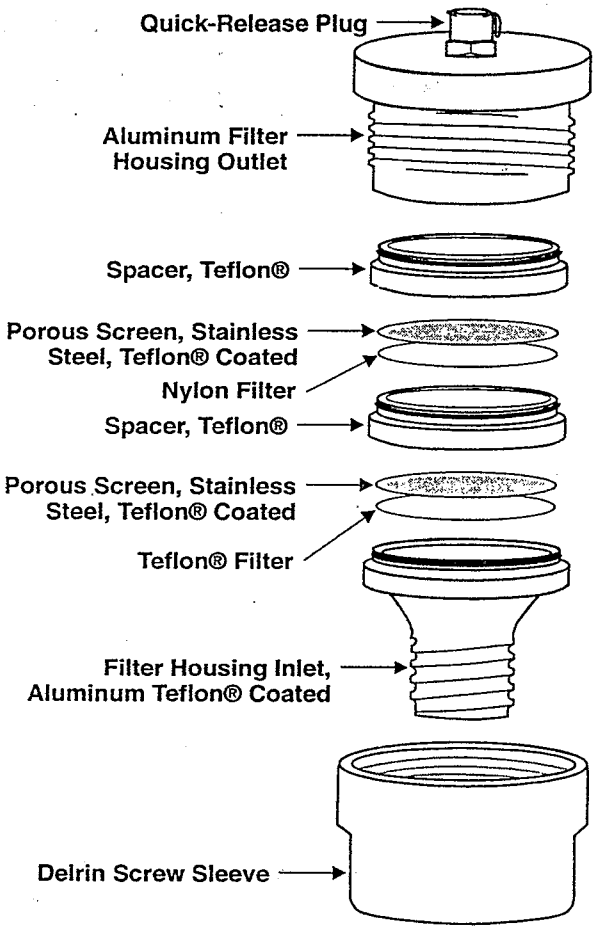

Acid Aerosol Filter Assembly

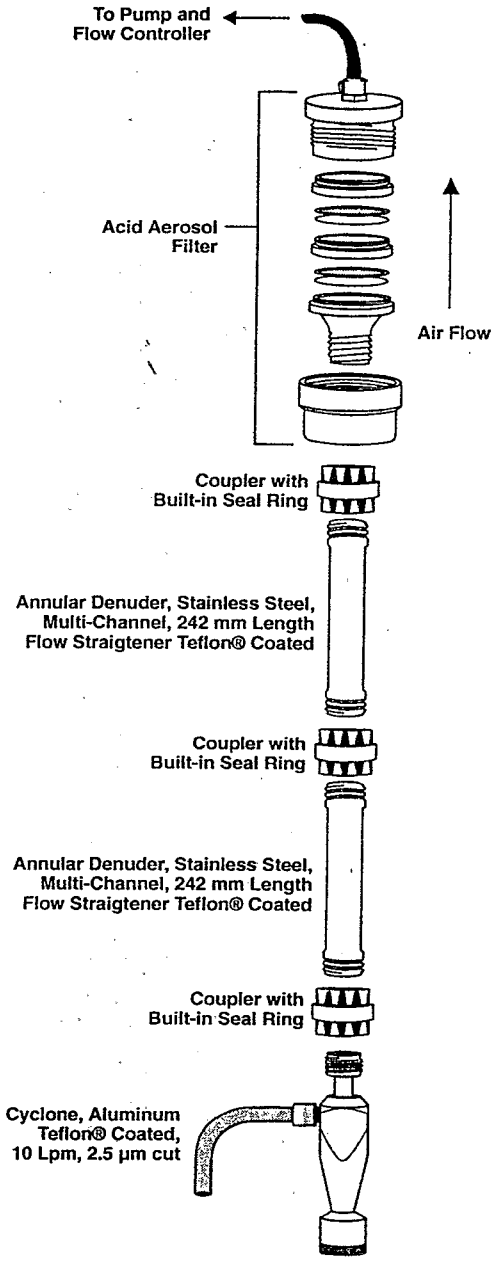

Acid Aerosol Filter Assembly
Shown in line

Figure 8. Filter pack assembly.

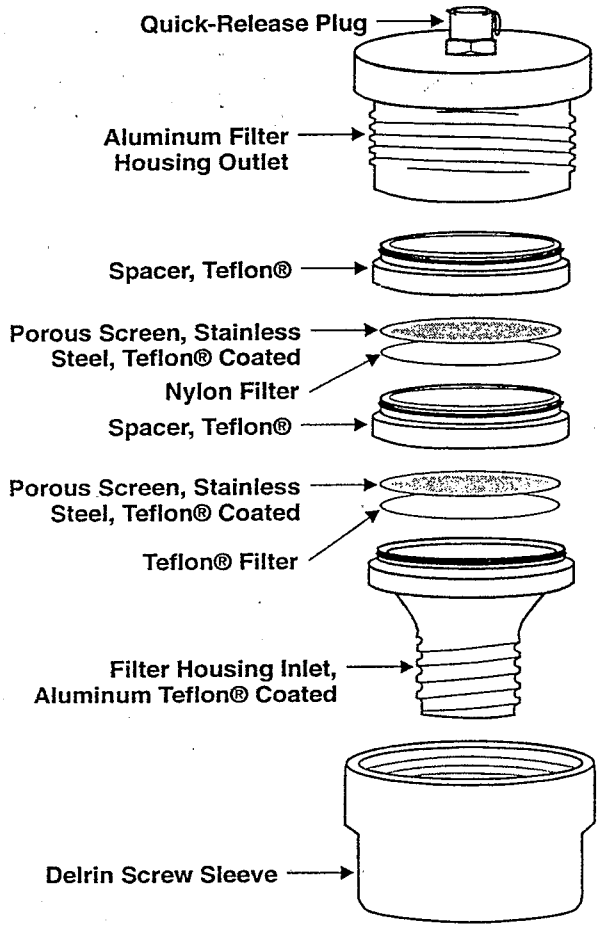

Acid Aerosol Filter Assembly

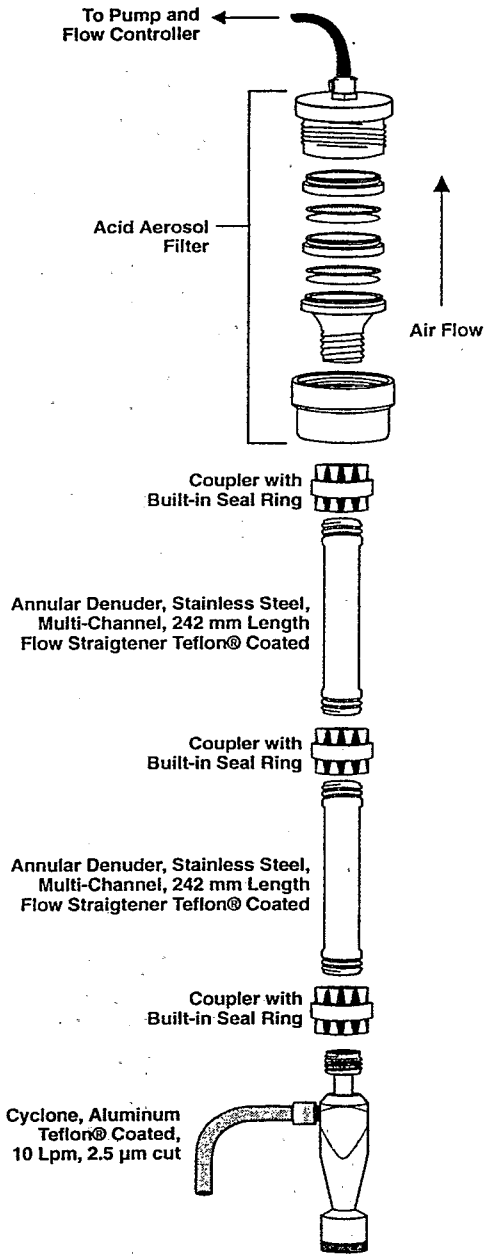

Acid Aerosol Filter Assembly
Shown in line

Figure 8. Filter pack assembly.

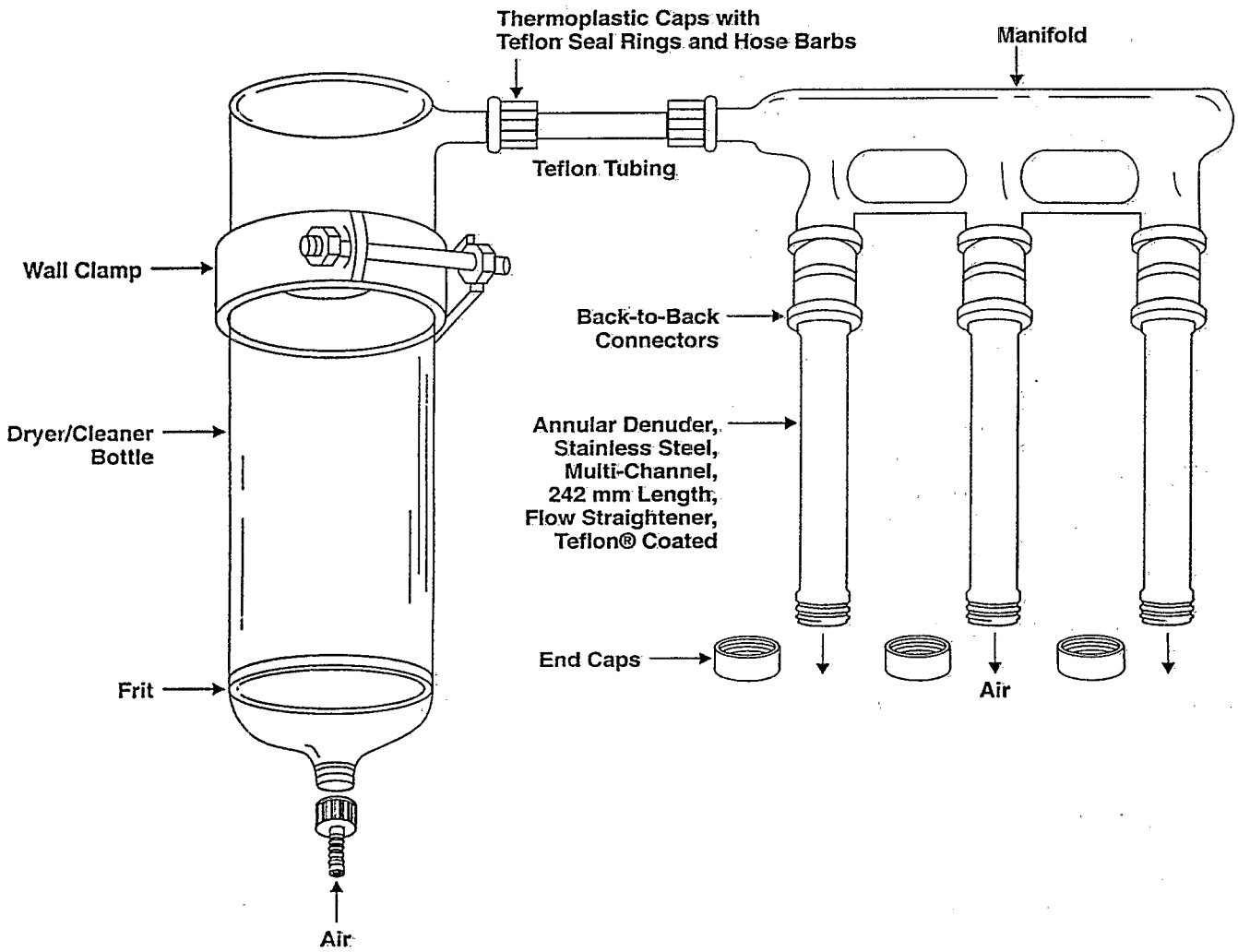

Figure 9. Drying train and manifold.

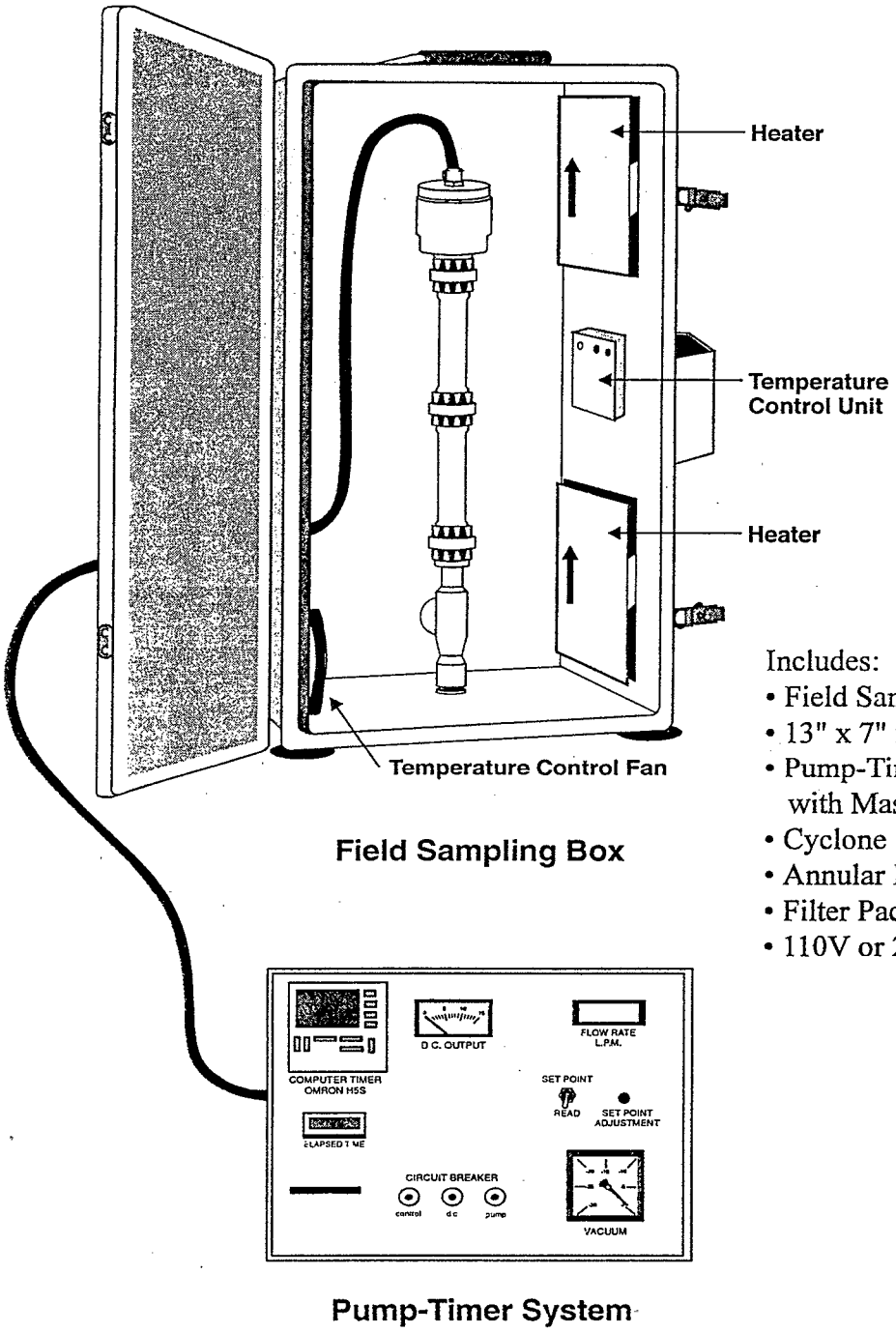

Includes:

- Field Sampling Box
- 13" x 7" x 28" Heated and Cooled
- Pump-Timer System, Single Channel with Mass Flow Controller
- Cyclone
- Annular Denuder
- Filter Pack
- 110V or 220V

Figure 10. Annular Denuder system with cyclone in heated sampling case.

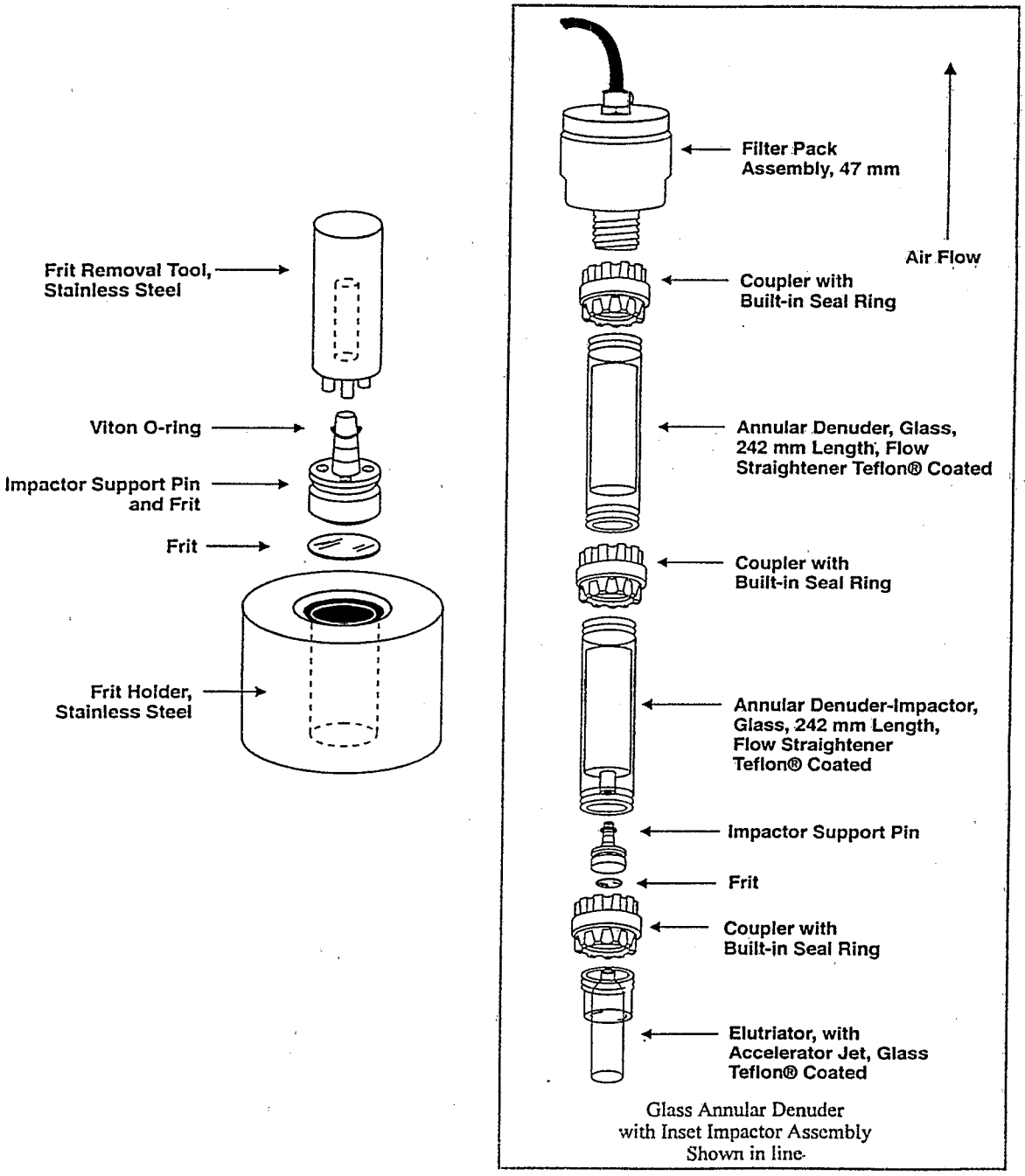

Figure 11. Frit removal from pin.

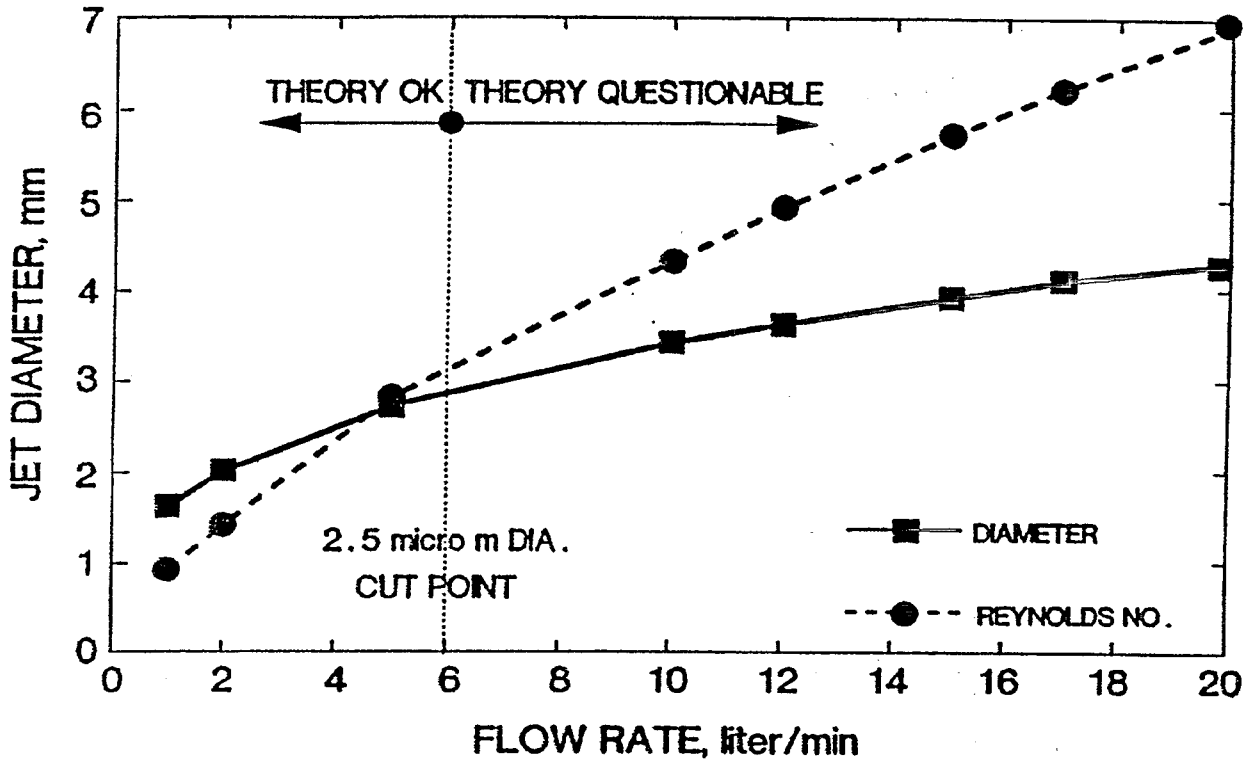

Figure 12. D_{50} for acceleration jet (Figure 7A) and Teflon®-coated cyclone (Figure 7B).

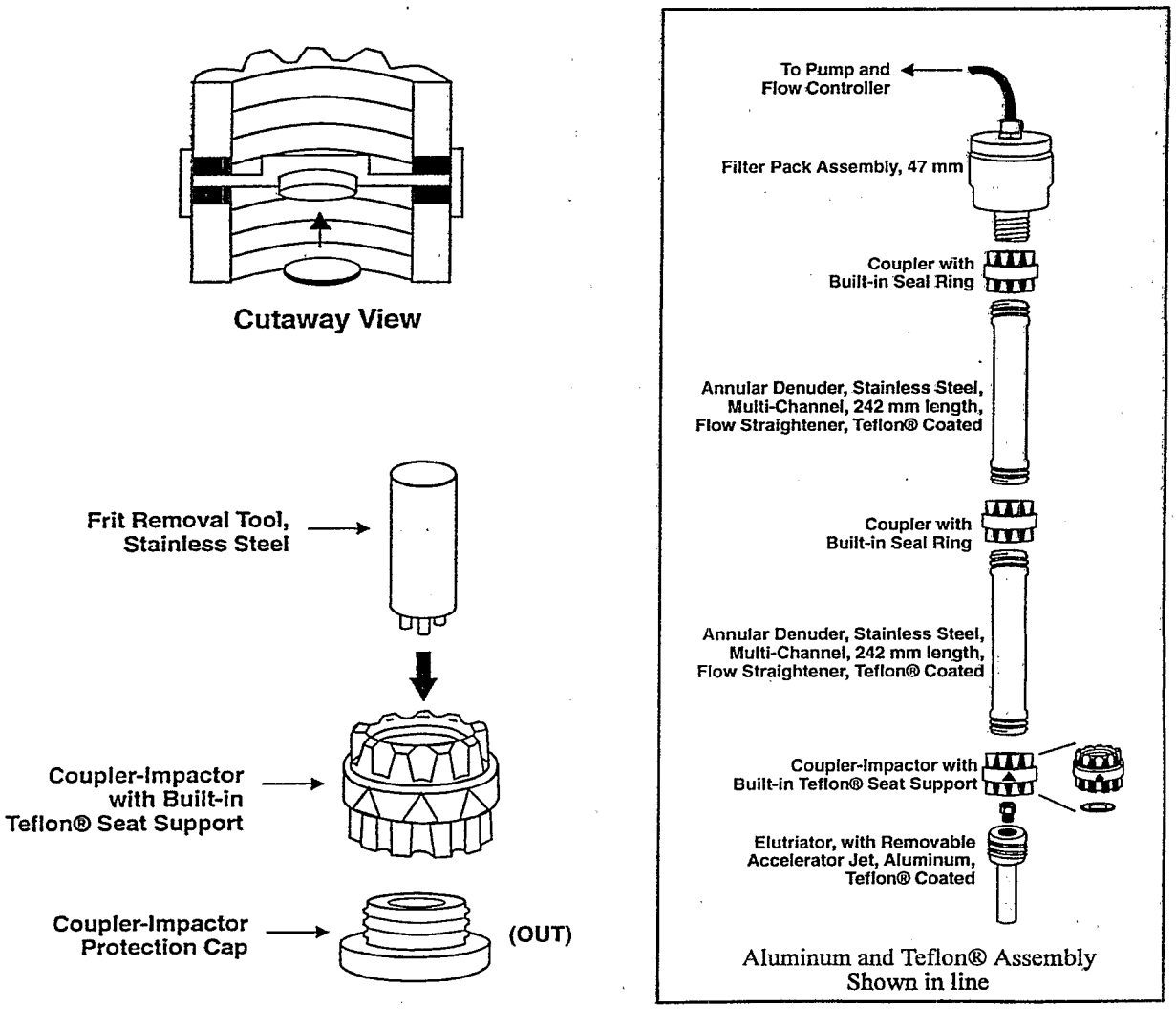

Figure 13. Side view impactor/coupler assembly with disc removal tools.

GENERAL

Project: _____
Site: _____
Location: _____
_____
_____

Sample Code: _____

Date: _____
Location of Sampler: _____
_____
_____

Operator: _____
_____

EQUIPMENT

Mass Flow
Controller No.: _____
Lab Calibration Date: _____
Flow Rate Set Point: _____
Calibrated By: _____
Rotameter No.: _____
DGM No.: _____

Sampler
Citric Acid Denuder No.: _____
Filter Assembly No.: _____

SAMPLING DATA

	Time	Stop
Time:	_____	_____
Flow Rate:	_____	_____
Temperature:	_____	_____
Pressure:	_____	_____
Avg. Flow Rate:	_____	_____
Leak Check (Before):	_____	
(After):	_____	

Total Sample Vol.: _____
Flow Maintained Rate: _____ (±5%)

Time	Flow Rate (Q), L/min	Ambient Temperature, °C	Barometric Pressure, mm Hg	Relative Humidity, %	Comments

Figure 14. ADS field test data sheet.

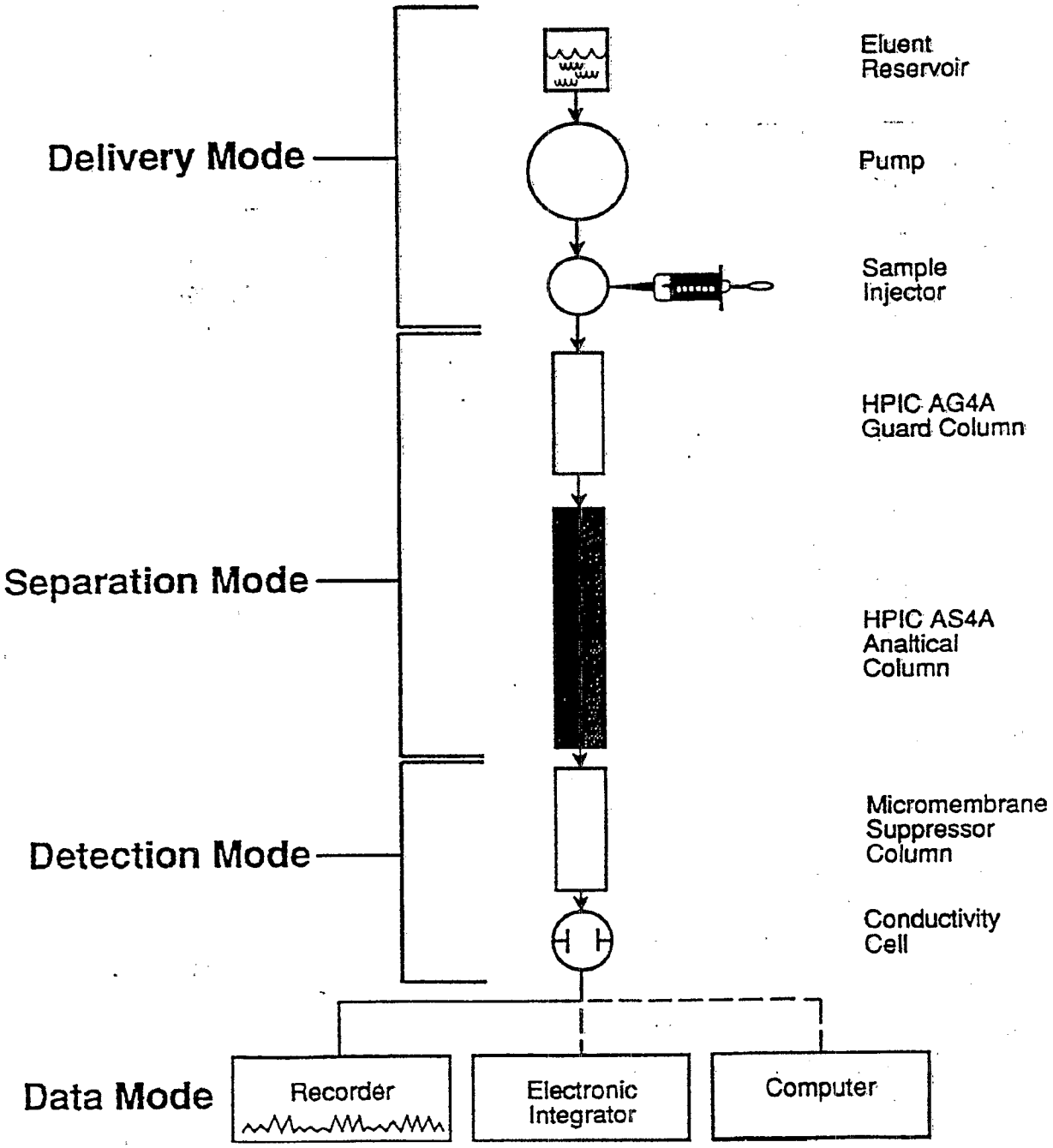

Figure 15. Major components of a commercially available ion chromatographer.

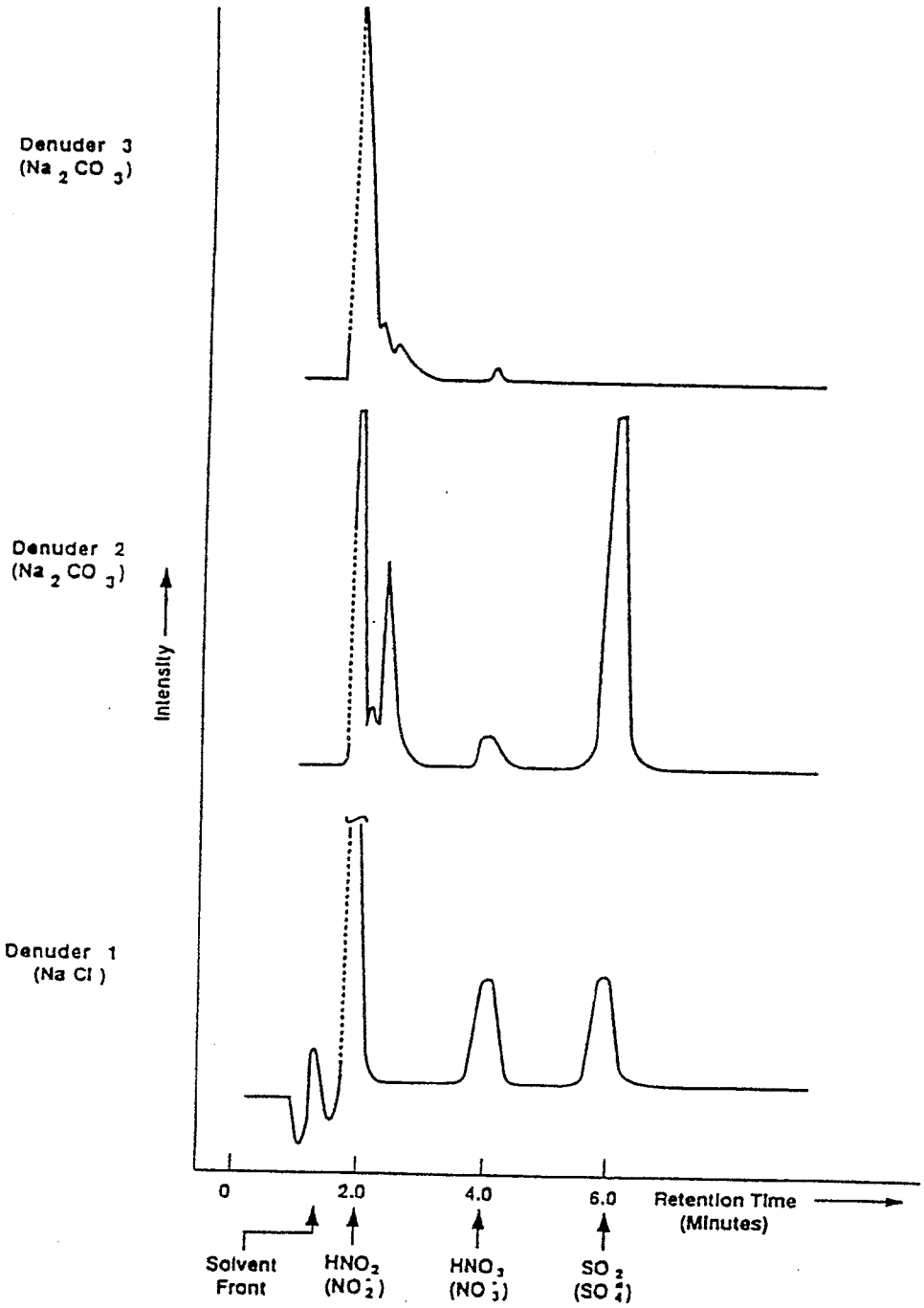

Figure 16. Chromatograms of denuder/filter extract performed by the ion chromatography.

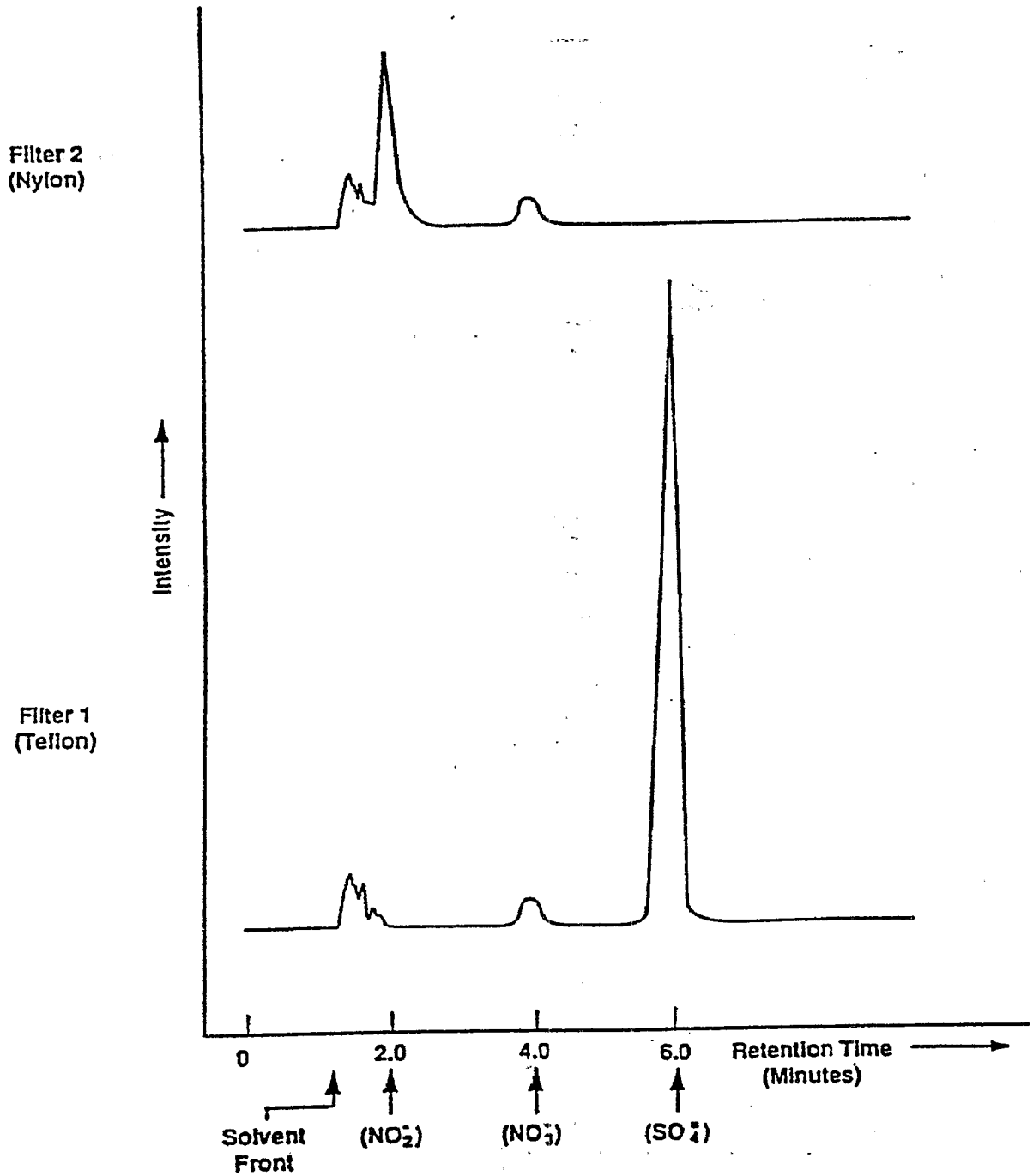

Figure 16 (Cont'd). Chromatograms of denuder/filter extract performed by the ion chromatography.

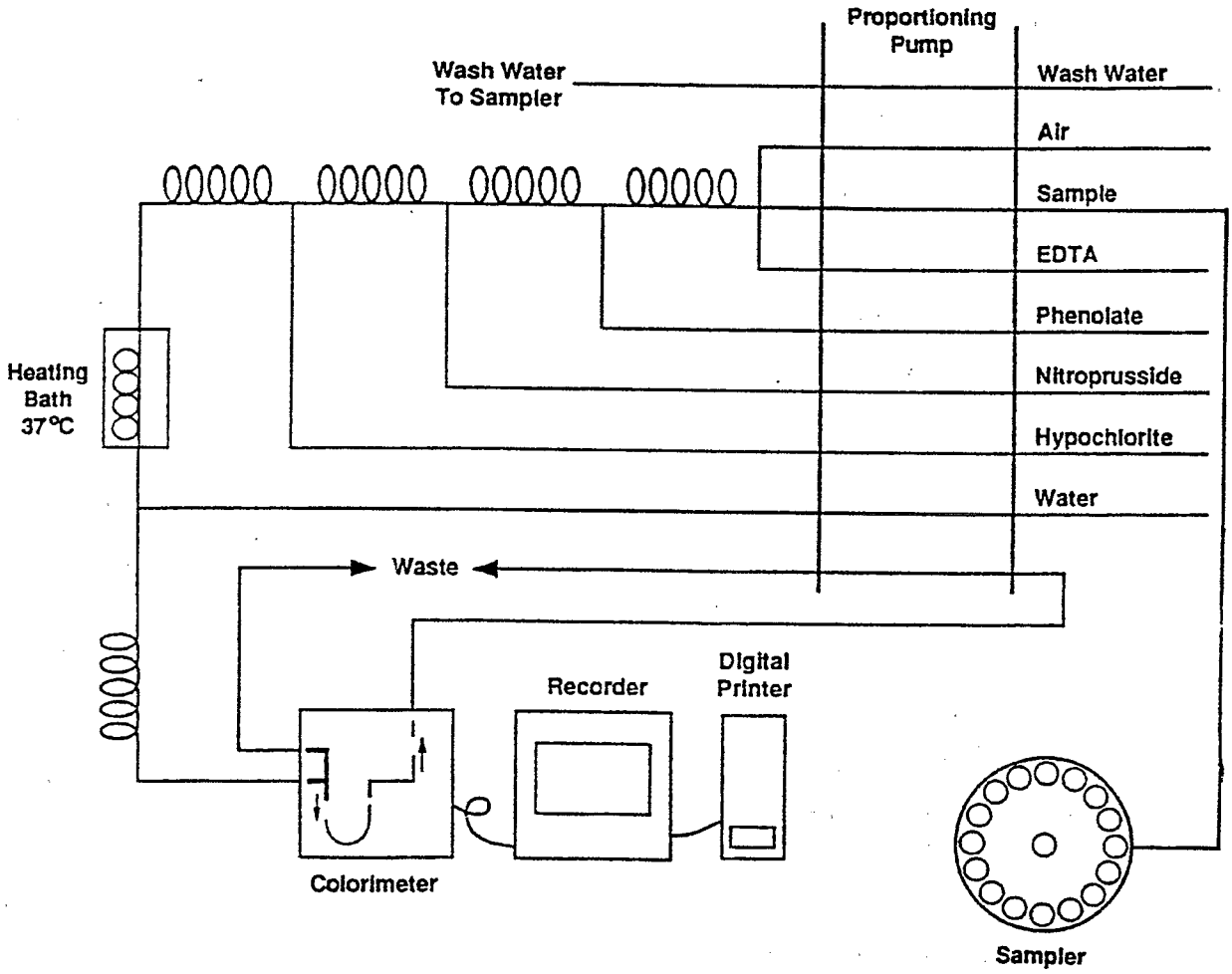

Figure 17. Technicon autoanalyzer flow diagram for ammonia analysis.

Determination of the Strong Acidity of
Atmospheric Fine-Particles (<2.5 μm)

Name: _____ Sample I.D.: _____
Date: _____ Location: _____
LAB: _____

Constituent	RUN NUMBER						
	1	2	3	4	5	6	7
pH 7 Buffer							
1							
2							
3							
pH 4 Buffer							
1							
2							
3							
EA Solution							
1							
2							
3							
Working Standards							
1A1							
1A2							
EA							
1B1							
1B2							
EA							
2A1							
2A2							
Temp.							
EA							
2B1							
2B2							
EA							
3A1							
3A2							
EA							
Temp.							
3B1							
3B2							
EA							

Figure 18. pH Analytical Laboratory Log Form

Constituent	RUN NUMBER						
	1	2	3	4	5	6	7
4A1							
4A2							
EA							
4B1							
4B2							
Temp.							
EA							
5A1							
5A2							
EA							
5B1							
5B2							
EA							
6A1							
6A2							
Temp.							
EA							
6B1							
6B2							
EA							
EA							
7A1							
7A2							
EA							
7B1							
7B2							
Temp.							
Sample Extracts							
A							
A1							
B							
B1							
C							
C1							
D							
D1							
E							
E1							
EA							
Temp.							
EA Solution							
1							
2							
3							
pH4 Buffer							
1							
2							
3							

Figure 18 (cont). pH Analytical Laboratory Log Form

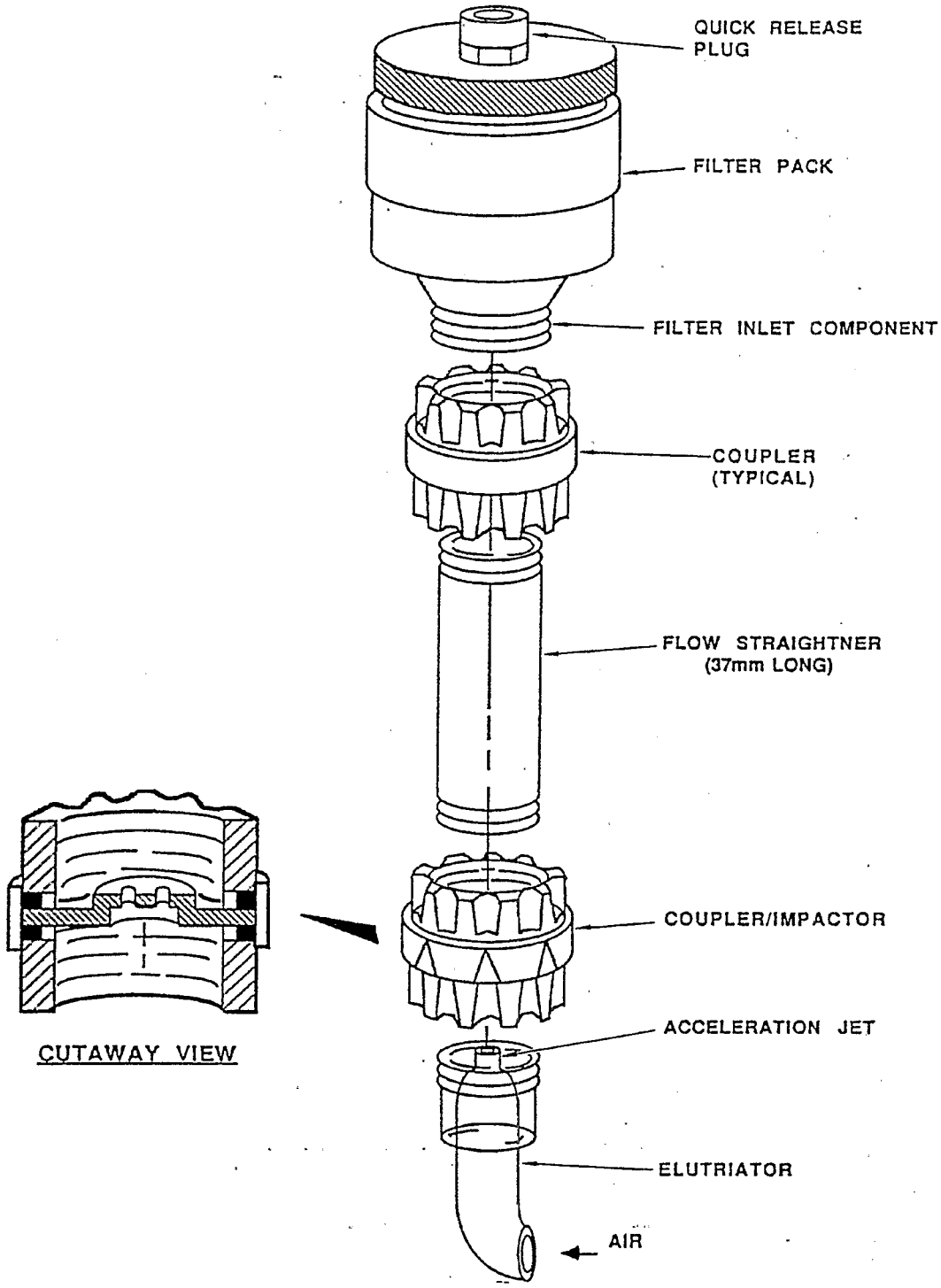

Figure 19. Annular Denuder personal sampler.

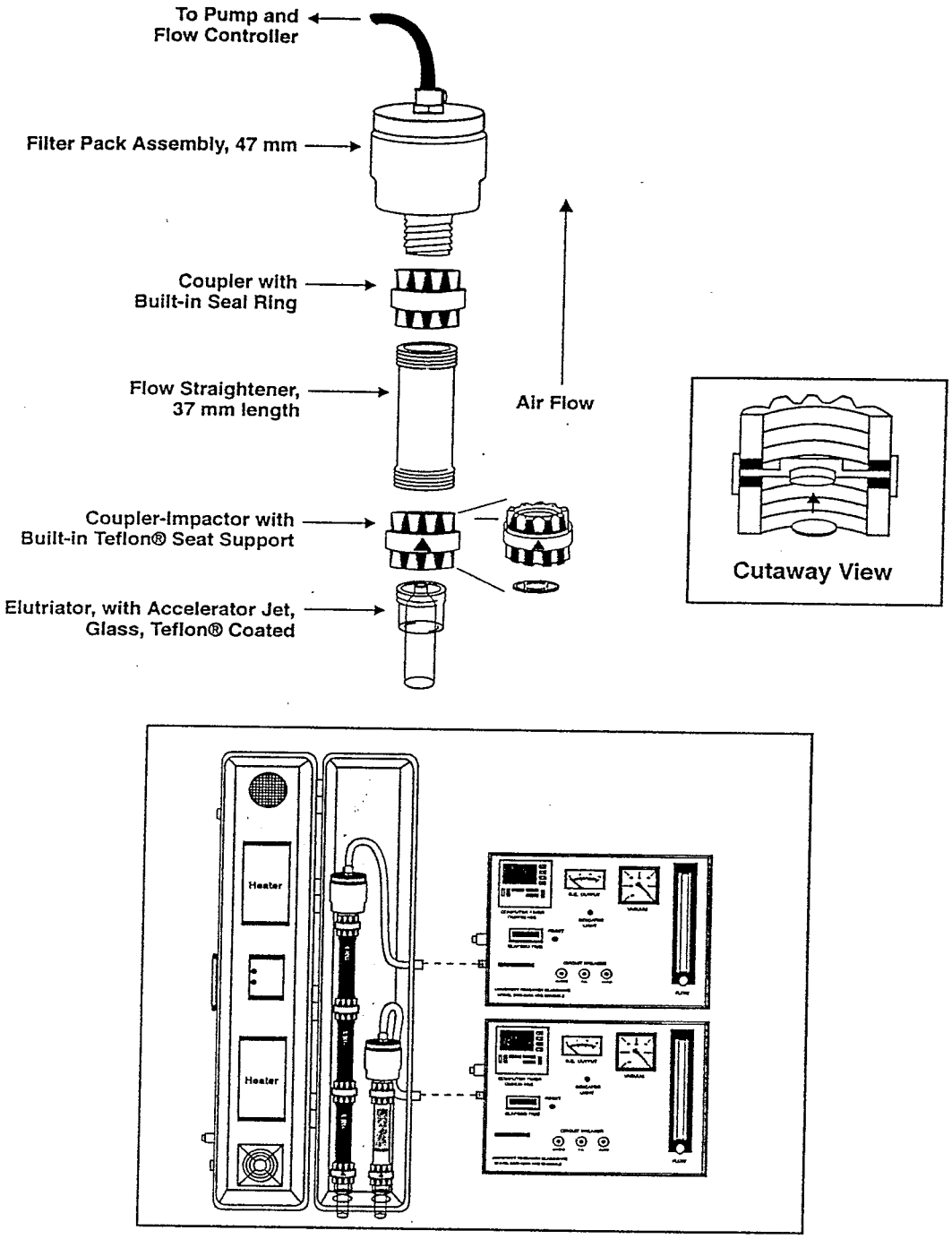

Figure 20. Annular Denuder system with parallel fine particle sampler.

EPA/625/R-96/010a

Compendium of Methods for the Determination of Inorganic Compounds in Ambient Air

SAMPLING AND ANALYSIS FOR ATMOSPHERIC MERCURY

Center for Environmental Research Information
Office of Research and Development
U.S. Environmental Protection Agency
Cincinnati, OH 45268

January 1997

EPA/625/R-96/010a

Compendium of Methods for the Determination of Inorganic Compounds in Ambient Air

Compendium Method IO-5

SAMPLING AND ANALYSIS FOR VAPOR AND PARTICLE PHASE MERCURY UTILIZING COLD VAPOR ATOMIC FLUORESCENCE SPECTROMETRY (CVAFS)

Center for Environmental Research Information
Office of Research and Development
U.S. Environmental Protection Agency
Cincinnati, OH 45268

January 1997

Method IO-5

Acknowledgements

This Method is part of the *Compendium of Methods for the Determination of Inorganic Compounds in Ambient Air* (EPA/625/R-96/060a), which was prepared under Contract No. 68-C3-0315, WA No. 2-10, by Midwest Research Institute (MRI), as a subcontractor to Eastern Research Group, Inc. (ERG), and under the sponsorship of the U.S. Environmental Protection Agency (EPA). Justice A. Manning, Center for Environmental Research Information (CERI), and Frank F. McElroy, National Exposure Research Laboratory (NERL), both in the EPA Office of Research and Development, were the project officers responsible for overseeing the preparation of this method. Other support was provided by the following members of the Compendia Workgroup:

- James L. Cheney, Corps of Engineers, Omaha, NB
- Michael F. Davis, U.S. EPA, Region 7, KC, KS
- Joseph B. Elkins Jr., U.S. EPA, OAQPS, RTP, NC
- Robert G. Lewis, U.S. EPA, NERL, RTP, NC
- Justice A. Manning, U.S. EPA, ORD, Cincinnati, OH
- William A. McClenny, U.S. EPA, NERL, RTP, NC
- Frank F. McElroy, U.S. EPA, NERL, RTP, NC
- William T. "Jerry" Winberry, Jr., MRI, Cary, NC

This Method is the result of the efforts of many individuals. Gratitude goes to each person involved in the preparation and review of this methodology.

Author(s)

- Gerald Keeler, University of Michigan, Ann Arbor, MI
- Jim Barres, University of Michigan, Ann Arbor, MI

Peer Reviewers

- Susan Kilmer, Michigan Department of Natural Resources, Lansing, MI
- Eric Prestbo, Frontier GeoSciences, Seattle, WA
- Anne M. Falke, Frontier GeoSciences, Seattle, WA
- Jamie Brown, Supelco Inc., Bellefonte, PA
- Alan Zaffird, International Technology Corporation, Cincinnati, OH

DISCLAIMER

This Compendium has been subjected to the Agency's peer and administrative review, and it has been approved for publication as an EPA document. Mention of trade names or commercial products does not constitute endorsement or recommendation for use.

Method IO-5
Sampling and Analysis for Vapor and Particle Phase Mercury in Ambient Air Utilizing Cold Vapor Atomic Fluorescence Spectrometry (CVAFS)

TABLE OF CONTENTS

	Page
1. Scope	5.0-1
2. Applicable Documents	5.0-2
2.1 ASTM Documents	5.0-2
2.2 Other Documents	5.0-2
3. Method Summary	5.0-2
4. Significance	5.0-3
5. Definitions	5.0-4
5.1 Calibration	5.0-4
5.2 Calibration Standard	5.0-4
5.3 Laboratory Duplicates (LD1 and LD2)	5.0-4
5.4 Collocated Samples	5.0-4
5.5 Laboratory Procedural Blank (LRB)	5.0-4
5.6 Field Blank (FB)	5.0-4
5.7 Storage Blank (STB)	5.0-4
5.8 Mercury Standard Stock	5.0-4
5.9 Precision	5.0-4
5.10 Accuracy	5.0-5
5.11 Detectability	5.0-5
5.12 Completeness	5.0-6
6. Contamination	5.0-6
7. Interferences	5.0-7
8. Safety, Restrictions, and Limitations	5.0-7
9. Facilities, Equipment, and Materials	5.0-8
9.1 Facilities	5.0-8
9.2 Equipment	5.0-8
9.3 Materials	5.0-9
10. Preparation of Supplies, Adsorbents and Reagents	5.0-10
10.1 Acid Cleaning Procedure	5.0-10
10.2 Preparation of Gold-Coated Bead Traps	5.0-11
10.3 Preparation of Glass Fiber Filters	5.0-12
11. Collection of Ambient Air Samples	5.0-13
11.1 The Sampling Equipment	5.0-13
11.2 Collection of Vapor Phase Hg Samples	5.0-14
11.3 Collection of Particulate Hg Samples	5.0-16
11.4 Sample Storage	5.0-18

TABLE OF CONTENTS (continued)

	Page
12. Analysis of Ambient Air Samples	5.0-18
12.1 Introduction	5.0-18
12.2 The Analytical System	5.0-19
12.3 Preparation of Reagents and Standards	5.0-19
12.4 Summary of Dual-amalgamation CVAFS Analytical Procedure	5.0-20
12.5 Analysis of Vapor Phase Hg Samples	5.0-21
12.6 Analysis of Hg in Particulate Samples	5.0-22
13. Calculation of Mercury Concentrations in Ambient Air	5.0-25
13.1 Calculation of Vapor Phase Mercury Concentrations	5.0-25
13.2 Calculation of Particle-Phase Mercury Concentration	5.0-26
14. Quality Assurance/Quality Control (QA/QC)	5.0-28
14.1 Personnel Qualifications	5.0-28
14.2 QA/QC Samples	5.0-28
14.3 Precision and Accuracy	5.0-29
14.4 Performance Criteria	5.0-29
15. References	5.0-30

Chapter IO-5
SAMPLING AND ANALYSIS FOR ATMOSPHERIC MERCURY

Method IO-5
SAMPLING AND ANALYSIS FOR VAPOR AND PARTICLE PHASE MERCURY IN AMBIENT AIR UTILIZING COLD VAPOR ATOMIC FLUORESCENCE SPECTROMETRY

1. Scope

1.1 Elemental mercury (Hg) and most of its derivatives are metabolic poisons which bioaccumulate in aquatic food chains, ultimately reaching concentrations capable of causing neurological and reproductive damage in terrestrial, as well as, aquatic organisms. Atmospheric Hg, although present only in trace amounts, has been established as a significant source of Hg to aquatic environments.

1.2 The widespread use of Hg stems largely from its electrical conductivity, high specific gravity, and fungicidal properties. The major sources of atmospheric Hg include combustion processes (incineration of medical waste, municipal waste, sewage sludge, and hazardous waste, as well as burning of fossil fuels), and manufacturing processes (iron and steel production, mining/smelting operations, cement production, and coke production).

1.3 Mercury compounds in the atmosphere exist in vapor and particulate forms, preferentially partitioning into the vapor phase. Mercury species fall within two main categories: inorganic Hg compounds and organic Hg compounds. The most common form of inorganic Hg is elemental Hg vapor. Other inorganic Hg forms include mercuric chloride ($HgCl_2$) and mercurous chloride (HgCl). The organic compounds include those compounds in which Hg is covalently bonded to a carbon atom, as in the case of methyl and dimethyl Hg.

1.4 Increased focus on atmospheric Hg pollution has resulted from the Clean Air Act Amendments of 1990. Mercury and its compounds are included in the Title III list of hazardous air pollutants and are subject to standards established under Section 112, including maximum achievable control technology (MACT). Also, Section 112(c)(6) of the 1990 Amendments mandates that Hg (among others) be subject to standards that allow for the maximum degree of emission reduction. These standards are to be promulgated no later than 10 years following the date of enactment. Additionally, within 5 years of the date of enactment, a list of source categories that account for no less than 90 percent of Hg emissions must be established.

1.5 As a result of the congressional mandates, the U.S. Environmental Protection Agency (EPA), state, and local air pollution control agencies are under increased pressure to monitor the trace levels of mercury in the ambient air. In addition, attempts to identify source/receptor relationships for these substances and to develop control programs to regulate emissions have been initiated.

1.6 Previous methods used to collect vapor-phase Hg have relied on the rapid amalgamation between Hg and gold or silver and in some cases the adsorption of Hg onto activated charcoal. Mercury was then quantified using atomic absorption spectrometry or instrumental neutron activation analysis. These methods generally required long-duration samples due to higher detection limits. Collection of vapor-phase Hg was improved with the use of thin gold plating on sand packed in a trap to maximize the

surface area for collection (Fitzgerald and Gill, 1979). Improvements to analytical detection limits were also made by employing cold-vapor atomic fluorescence spectrometry (Bloom and Fitzgerald, 1988).

1.7 Previous methods used to collect particulate Hg included trapping particles on quartz wool, which was susceptible to artifact formation due to the adsorption of vapor-phase Hg. Quartz-wool plugs should not be utilized for ambient particulate Hg sampling. Additional methods have included air filtration through quartz fiber filters followed by acid extraction. The acid extraction techniques have, until recently, been plagued by high Hg concentrations in the acid extraction solutions. Acid extraction can be utilized as a suitable alternative to the microwave digestion technique in many applications where precision requirements and detection limits are not limiting factors. Instrumental neutron activation analysis has also been used to quantify mercury in particulates collected on Teflon® filters (Lamborg et al., 1994). Microwave digestion has been demonstrated to give equivalent results to INAA on Urban Particulate Standard Reference Materials.

1.8 This method describes procedures for collection and analysis of vapor phase and particulate Hg, inorder to provide an EPA-approved, accessible sampling and analytical methodology, for uniform monitoring of atmospheric mercury levels. These procedures have been used successfully in long-term regional monitoring programs, as well as short-term intensive studies.

2. Applicable Documents

2.1 ASTM Documents

- D1356 *Definition of Terms Related to Atmospheric Sampling and Analysis*
- D1357 *Practice for Planning the Sampling of the Ambient Atmosphere*

2.2 Other Documents

- U. S. Environmental Protection Agency, *Quality Assurance Handbook for Air Pollution Measurement Systems,* EPA-600/9-76-005.
- U. S. Environmental Protection Agency, *Quality Assurance Handbook for Air Pollution Measurement Systems,* EPA-600/4-77-027a.
- Scientific Publications of Ambient Air Studies (1-12).

3. Method Summary

[Note: This method for collection and analysis of mercury in ambient air take advantage of the amalgamating property of mercury to a gold surface. In the following description reference is made to gold-coated glass beads only. However, other media have been shown to give equivalent results. These include, but are not limited to, gold-coated sand and a solid gold matrix.]

3.1 The collection of mercury, from ambient air in the vapor and particulate phase, involves use of gold-coated bead traps and quartz-fiber filters. The amalgamation process for vapor-phase mercury requires a flow rate low enough to allow adsorption of the mercury in the air to the gold surface. The significantly lower levels of particle-phase mercury on the other hand require a much higher flow rate in order to collect sufficient particle mass for mercury determination. Therefore, separate sampling systems are needed for the collection of mercury in the vapor and particle phases. Accurate flow determinations through both sampling systems are critical in providing accurate Hg concentrations in air.

3.2 Vapor-phase Hg is collected using gold-coated glass bead traps. A Teflon® filter pack with a glass fiber filter is placed in front of the traps to remove particulate material from the air being sampled. Air is pulled through the vapor-phase sampling system using a mass-flow controlled vacuum pump at a nominal flow rate of 0.3 Lpm.

3.3 Particle-phase Hg is collected using a glass-fiber filter in an open-faced Teflon® filter pack. Air is pulled through the particulate sampling system using a vacuum pump at a nominal flow rate of 30 Lpm.

3.4 Determination of vapor- and particle-phase mercury in ambient air is accomplished using cold-vapor atomic fluorescence spectrometry (CVAFS), more specifically, dual-amalgamation CVAFS. The amount of vapor-phase mercury collected on a gold-coated bead trap is determined directly by CVAFS. The sample trap is heated to release the collected mercury. The desorbed mercury is carried in an inert gas stream (He or Ar) to a second gold-coated bead trap, the analytical trap. The mercury collected on the analytical trap is then thermally desorbed and carried into the CVAFS analyzer. The resulting voltage peak is integrated to produce peak area for the sample.

3.5 Determination of Hg in the particle phase requires acid extraction of the glass-fiber filters prior to analysis. The sample filters are extracted in a nitric acid solution using microwave digestion to yield "acid-extractable" particulate mercury. The extract is oxidized with BrCl to convert all forms of Hg to Hg^{+2}. $NH_2OH \cdot HC1$ and SnCl2 are added to the extract to reduce the Hg^{+2} to volatile Hg^{o}. The Hg^{o} is liberated from the extract by purging with an inert gas (N2) and collected on a gold-coated bead trap. The amount of mercury collected on the trap is then determined using dual-amalgamation CVAFS.

4. Significance

4.1 The area of toxic air pollutants has been the subject of interest and concern for many years. Recently the use of receptor models has resolved the elemental composition of atmospheric aerosol into components related to emission sources. The assessment of human health impacts resulting in major decisions on control actions by federal, state, and local governments are based on these data.

4.2 Elemental mercury and most compounds of mercury are protoplasmic poisons and, therefore, may be lethal to all forms of living matter. In general, the organic mercury compounds are more toxic than mercury vapor or the inorganic compounds. Even small amounts of mercury vapor or many mercury compounds can produce mercury intoxication when inhaled by man. Acute mercury poisoning, which can be fatal or cause permanent damage to the nervous system, has resulted from inhalation of from 1,200 to 8,500 $\mu g/m^3$ of mercury. The more common chronic poisoning (mercuralism) which also

affects the nervous system is an insidious form in which the patient may exhibit no well-defined symptoms for months or sometimes years after exposure. The symptoms usually associated with mercuralism are erethism 9exaggerated emotional response), gingivitis, and muscular tremors. A person suffering from a mild case of mercury poisoning is usually unaware of the cause of the illness because the symptoms are psychopathological in nature. Likewise, these ambiguous symptoms may result in an incorrect diagnosis by a physician. In addition, animals and plants also exhibit a low tolerance to mercury and its compounds.

5. Definitions

5.1 Calibration--the process of correlating instrument response to known standard units of measure by regression analysis for the purpose of quantifying unknown samples based on observed instrument readings.

5.2 Calibration Standard--a solution prepared from a certified mercury standard stock solution which is used to calibrate instrument response to concentration.

5.3 Laboratory Duplicates (LD1 and LD2)--two aliquots of the same sample treated exactly the same throughout preparation and analysis. Analyses of laboratory duplicates provide an indication of precision associated with laboratory procedures.

5.4 Collocated Samples--samples collected from identical sampling systems placed in the field side-by-side. Collocated samples are collected and analyzed identically and are used to determine overall sampling and analytical precision.

5.5 Laboratory Procedural Blank (LRB)--a blank trap or filter treated exactly like a sample during laboratory processing and analysis. The LRB is used to determine the amount of mercury added to samples from the laboratory environment, reagents, equipment, and handling.

5.6 Field Blank (FB)--a field blank is treated exactly like an ambient sample during sample setup and removal, but air is not drawn through the field blank. The FB is used to determine the limit of detection and is site-specific.

5.7 Storage Blank (STB)--a blank created by storing either a gold-coated trap (vapor phase Hg), or a filter (particle phase Hg) prior to analysis. The STB is used to determine the amount of mercury added to samples during storage.

5.8 Mercury Standard Stock--a solution containing a certified concentration of mercury obtained from a commercial source. This standard is used to prepare calibration standards.

5.9 Precision--a measure of the overall uncertainty in a particular measurement. Assessment of precision requires the analysis of co-located samples.

Precision is assessed using relative percent difference (RPD) between the collocated samples. The average precision is reported as the average of the absolute value of the RPD.

$$RPD = \frac{(X_1 - X_2)(100)}{(X_1 + X_2)/2}$$

where:

X_1 = concentration from the first collector
X_2 = concentration from the second collector

5.10 Accuracy--a measure of the degree to which a measurement or computed value reflects the true value of analyte present. Accuracy is assessed using standard reference materials (SRM) that have been processed in a manner identical to the field samples.

Percent recovery, R, is used to assess accuracy from standard reference materials. Recovery is calculated as:

R = (Measured Mass/Actual Mass)(100)

Certified reference materials for mercury in vapor and particulate phases are not available, preventing the assessment of accuracy in these media. Interlaboratory calibrations and sample exchanges are strongly recommended.

5.11 Detectability--the detection limit is defined as the lowest value of a characteristic that a measurement process, or a method-specific procedure can reliably discern. Three types of detection limits include the instrument detection limit (IDL), the method detection limit (MDL), and the system detection limit (SDL) defined as:

5.11.1 IDL. The smallest signal above background noise that an instrument can detect at a 99 percent confidence level. This value is quantified by direct injection of a spiked blank or other low level sample (1-5 times the theoretical IDL) into the instrument. The sample does not undergo any sample processing steps of the analytical methods and is used to provide the detection capabilities of the instrument.

5.11.2 MDL. The minimum concentration of a substance measured and reported with 99 percent confidence that the analyte concentration is greater than zero. This is determined from the analysis of a sample in a given matrix containing the analyte. It is essential that all sample processing steps of the analytical method be included in the determination of the MDL. In many cases the term "limit of detection" (LOD) and MDL are used synonymously.

5.11.3 SDL. The minimum concentration of analyte measured in a sample that is detectable and distinguishable from background noise of the entire data collection system. For Hg analyses, the SDL is defined as either the mean or 3σ of the field or storage blanks, whichever value is largest.

5.12 Completeness

The measure of the number of valid samples (meeting all QA requirements) obtained compared to the number required to achieve the objectives of the study. Overall completeness is the number of valid samples compared to the number planned. Laboratory completeness is the number of valid samples obtained compared to the number analyzed. As with the other date quality attributes, completeness can be controlled through adherence to analysis protocols in order to minimize contamination and sampling errors.

Completeness is calculated as:

$$\text{Completeness} = v/(n)(100)$$

where:

v = number of samples judged valid
n = total number of measurements necessary to achieve project objectives

6. Contamination

6.1 Determination of Hg in atmospheric samples requires the ability to reliably detect very small (picogram) amounts of mercury. The potential for contamination of ambient samples cannot be overemphasized.

6.2 Much of the effort required to obtain good data is associated with maintaining the cleanest possible conditions. Absolute adherence to clean techniques is essential throughout all phases of sample collection, handling, and analysis.

6.2.1 Class 100 Clean Room-A key element in minimizing exposure of samples to potential contaminants includes the use of a metal-free Class 100 clean room, which is supplied by HEPA filtered air that has been passed through charcoal adsorbent to reduce vapor-phase Hg levels. Procedures conducted in the clean room include the final stages of acid-cleaning for sample containers and supplies, the extraction and analysis of particulate mercury samples, and storage of ultra-pure reagents.

6.2.2 Preparation of Sampling Supplies to Minimize Contamination-All containers with which the sample comes into contact are acid-cleaned using the protocol described in this method. Supplies used to manufacture gold-coated traps for vapor-phase Hg collection and filters used for collection of particulate Hg are baked prior to use to volatilize Hg. Particle-free gloves are worn during all manipulations of sample containers and supplies. All acid-cleaned supplies are stored double or triple-bagged in resealable polyethylene. Containers for gold-coated bead traps and glass fiber filters prepared for sampling are sealed with Teflon® tape and-bagged.

6.2.3 Minimizing Exposure During Sample Collection-On-site preparation of filters and traps for sampling is conducted by trained operators, outdoors to minimize potential particulate contributions. Sample preparation can also be performed indoors if a Class 100 environment is utilized. During all phases of sample set-up and removal, the operator wears particle-free gloves and stands downwind of the sample in order to prevent contamination by shedding particles from clothing or breathing on samples.

After sampling, filters and traps are re-sealed in containers using Teflon® tape and bagged in resealable polyethylene.

6.2.4 Minimizing Exposure During Sample Analysis-All reagents utilized in the analysis of samples for Hg are highly purified to minimize Hg content. Suggested sources for low-Hg containing reagents are supplied in this method. Blank levels in reagents are carefully monitored and reagents are replaced periodically to maintain the lowest levels possible. Particle-free gloves are worn during all phases of sample analysis. Blanks from extraction vessels for particulate Hg analysis are monitored and analytical systems are maintained to insure consistent, low detection limits.

7. Interferences

7.1 Types of interferences and the procedures used to resolve them analytically vary depending on the manufacturer and model of the analytical instrument used. There are no known positive interferences at the wavelength of 253.7 nm used to excite and measure the fluorescence of Hg atoms using the CVAFS procedure as described. Suspected negative interferences include polyaromatic hydrocarbons and water vapor. Excessive water vapor will interfere by quenching the fluorescence signal as the Hg is liberated from the gold trap. Free halogens also present a hazard to the gold traps resulting in a permanent destruction of the trap resulting in low values or no response at all.

7.2 Ambient levels of dimethyl mercury, sulfur dioxide, hydrogen sulfide, and nitrogen dioxide do not interfere with the collection or analysis of mercury vapor when utilizing silver wool techniques. These compounds have not, however, been thoroughly tested utilizing the gold-coated bead trap technique. It is the users responsibility to evaluate these compounds when using this methodology.

8. Safety, Restrictions, and Limitations

8.1 The toxicity or carcinogenicity of reagents used in this method have not been fully established. Each chemical should be regarded as a potential health hazard and exposure to these compounds should be as low as reasonably achievable. Each laboratory is responsible for maintaining a current awareness file of OSHA regulations regarding the safe handling of the chemicals specified in this method. A reference file of material data handling sheets should also be available to all personnel involved in the chemical analysis.

8.2 Mercury compounds are highly toxic if inhaled, swallowed or absorbed through the skin. Laboratory personnel should use caution and wear gloves when handling standards containing mercury.

8.3 The American Conference of Governmental Industrial Hygienists (ACGIH) has adopted the threshold limit value (TLV) of 100 $\mu g/m^3$ for mercury vapor and inorganic compounds of mercury for an 8-hour work day. In addition, the ACGIH has established a TLV for organic mercury of 10 $\mu g/m^3$ for an 8-hour exposure.

9. Facilities, Equipment, and Materials

9.1 Facilities

9.1.1 Clean room-Class 100 with down-flow, positive pressure ventilation, and separated dressing room. Construction materials must be nonmetallic, preferably plastic or varnished wood attached without metal fasteners. Metal parts for which no substitute exists must be painted or otherwise sealed. Paints and varnishes must not contain mercury fungicides or additives. Non-permanent plastic enclosures which provide HEPA-filtered air at adequate flow rates can also, under many circumstances, provide an adequate clean environment. These facilities will likely require more strict adherence to maintenance and cleaning schedules.

9.1.1.1 Adhesive mats, for use at entry points and at work stations to remove dust and dirt from clean-room boots.

9.1.1.2 Laminar-flow exhaust hood for clean reagent preparation and particulate Hg sample processing and purging.

9.1.1.3 Clean room suit, hood, boots, and particle free gloves.

9.1.2 Fume hoods - for the acetone and hydrochloric acid soaking steps of the labware cleaning system.

9.2 Equipment

[Note: Following is a list of the required facilities, equipment, supplies and reagents for sample preparation, collection, and analysis. The make and model of some of the items are provided although many of the materials are available from a variety of sources.]

9.2.1 Mercury Analysis System

[Note: Separate CVAFS analysis systems dedicated to measurement of mercury from vapor phase and particulate samples is recommended since standardization procedures and analytical levels of Hg differ for the two media.]

9.2.1.1 Cold vapor atomic fluorescence spectrometer (CVAFS).
9.2.1.2 Power conditioner to reduce voltage fluctuations to CVAFS.
9.2.1.3 Integrator.
9.2.1.4 Variable voltage transformers (2) for thermally desorbing traps.
9.2.1.5 Mass flow controller for maintaining constant flow rate of carrier gas through CVAFS.
9.2.1.6 Four-channel programmable circuit controller.
9.2.1.7 Axial fans (2), 30 CFM, for cooling traps.
9.2.1.8 Nickel-chromium wire coils (2) for thermally desorbing gold traps.

9.2.2 Microwave Digestion System

9.2.2.1 Microwave oven equipped with temperature and pressure control system for extracting particulate Hg samples.

9.2.2.2 Teflon® digestion vessels.

9.2.3 Muffle furnace-for baking glass fiber filters, quartz wool, and quartz tubes; capable of heating to 700°C.

9.2.4 Pumps and Flow Measurement System

9.2.4.1 Sampling box (plastic enclosure, suitable for outdoor conditions, approximately 18x24").

9.2.4.2 Pole for sampling box (1-1/4" galvanized steel pip nominally 10 feet long).

9.2.4.3 Mounting hardware for sampling box.

9.2.4.4 Vinyl tape to cover steel pipe and mounting hardware.

9.2.4.5 Trap heater, custom made.

9.2.4.6 Variable voltage transfer for trap heater.

9.2.4.7 Vacuum pumps, oil-less, brush-less, capable of flow rates of 30 Lpm and 0.3 Lpm with mass flow controller.

9.2.4.8 Rotameters, calibrated, capable of measuring 0.3 and 30 Lpm.

9.2.4.9 Dry test meter to measure total volume of air for particulate mercury sample.

9.2.5 Freezer for particulate Hg sample storage at -40°C.

9.3 Materials

9.3.1 Supplies for Cleaning Sampling and Analysis Equipment

9.3.1.1 Acetone, reagent grade.

9.3.1.2 Alkaline detergent.

9.3.1.3 Deionized water, high purity, 18.2 M Ω cm^{-1}.

9.3.1.4 Concentrated hydrochloric acid, trace metal grade.

9.3.1.5 Concentrated nitric acid, trace metal grade.

9.3.1.6 Water bath capable of maintaining temperature of 80°C.

9.3.1.7 Polyethylene or polypropylene tubs with lids, various sizes.

9.3.1.8 Polyethylene carboys, 20 L with spigot.

9.3.1.9 New, resealable polyethylene bags.

9.3.1.10 Particle-free wipes.

9.3.2 Supplies for Preparation of Gold-Coated Bead Traps

9.3.2.1 Sputter coater with 24 karat gold source.

9.3.2.2 Glass-blowing torch.

9.3.2.3 Tungsten rod for indenting quartz tubes.

9.3.2.4 Borosilicate glass beads (1 mm dia.), acid-washed.

9.3.2.5 Quartz tubes (10 cm length, 7 mm O.D., 5 mm I.D.).

9.3.2.6 Quartz wool.

9.3.2.7 Teflon® heat shrink tubing.

9.3.2.8 Teflon® end plugs, custom made.

9.3.2.9 Rigid plastic tubes with endcaps for gold trap storage.

9.3.2.10 Teflon® tape, ½".

9.3.2.11 Polyethylene tube bags and heat sealer.

9.3.3 Supplies for Preparation of Glass Fiber Filters

9.3.3.1 Glass fiber filters, 47 mm.

9.3.3.2 Ceramic crucible.

9.3.3.3 Teflon® jars for storage of filters.

9.3.3.4 Teflon® tape, 1 in.

9.3.4 Supplies for Sample Collection

9.3.4.1 Teflon® filter holders, 47 mm, closed inlet for vapor-phase Hg, open inlet for particle-phase Hg.

9.3.4.2 Plastic petri dishes, 50 mm, for particulate mercury sample filters.

9.3.4.3 Plastic/sealable refrigerator type containers.

9.3.4.4 Teflon® coated forceps.

9.3.4.5 Particle-free gloves.

9.3.4.6 Resealable polyethylene bags.

9.3.4.7 Teflon® tape, 1" and ½".

9.3.4.8 Teflon® tubing, ¼" O.D.

9.3.4.9 Latex tubing, 1/8" I.D.

9.3.4.10 Polyethylene tubing, 3/8" O.D.

9.3.4.11 Quick connectors.

9.3.4.12 Extension cords.

9.3.5 Supplies for Sample Analysis

9.3.5.1 Carrier gas, argon or helium, ultra-high purity (99.999%).

9.3.5.2 Purge gas, nitrogen, pre-purified (99.998%).

9.3.5.3 Gas tight syringe, 100 μL.

9.3.5.4 Injection port.

9.3.5.5 Minnert valve and septa for injection port.

9.3.5.6 Glass impinger and bubblers, 30 mL.

9.3.5.7 Pipets, including 1000 μL, 500 μL, 250 μL, 100 μL, and 50 μL.

9.3.5.8 Glass or Teflon® tubes, ½" O.D., 6" long, for soda lime traps

9.3.5.9 Teflon® reducing unions (½" to ¼"), for connecting soda lime traps to bubbler exhaust and gold trap.

9.3.5.10 Concentrated nitric acid (HNO_3), highest purity.

9.3.5.11 Concentrated hydrochloric acid (HCl), highest purity.

9.3.5.12 Potassium bromide (KBr).

9.3.5.13 Potassium bromate ($KBrO_3$)

9.3.5.14 Hydroxylamine hydrochloride ($NH_2OH \cdot HCl$)

9.3.5.15 Stannous chloride dihydrate ($SnCl_2 \cdot 2H_2O$).

9.3.5.16 1000 μg/mL mercury standard, NIST traceable.

9.3.5.17 Elemental mercury, liquid, high purity.

9.3.5.18 Constant temperature ($\pm$ 0.1°C), circulating water bath.

9.3.5.19 Certified immersion thermometer.

10. Preparation of Supplies, Adsorbents and Reagents

10.1 Acid Cleaning Procedure

[Note: All Teflon® and polyethylene sample bottles, reagent bottles and analytical supplies which will come into contact with the samples are cleaned using the following procedures:]

[Note: The acids mentioned below may be reused many times. A large volume of each types of acid may be prepared and stored in dedicated polyethylene carboys. Acid should be checked for contamination or replaced regularly.]

10.1.1 Acetone Rinse-sampling and analytical supplies for acid-cleaning by first ringing with reagent grade acetone in a fume hood.

10.1.2 Detergent Wash-supplies are then washed with a dilute Alconox detergent solution, rinsed five times with cold tap water followed by three rinses with deionized water.

10.1.3 Heated Hydrochloric Acid Soak-bottles are filled with 3M (250 mL of high purity concentrated HCl in 750 mL of D.I. water) trace metal grade HCl and soaked at 80°C in a water bath in a fume hood for six hours, then cooled to room temperature, emptied and rinsed three times with ASTM Type I water. Polyethylene or polypropylene tubs with lids are used to soak small items such as the filter packs, quartz tubes, Teflon® endplugs, etc..

10.1.4 Short Nitric Acid Soak-bottles and polyethylene tubs of small items are filled with 0.56M trace metal grade HNO_3, soaked at room temperature for 72 hours, emptied, and rinsed three times with ASTM Type I water.

10.1.5 Long Nitric Acid Soak-bottles and covered tubs with supplies are transferred to the Class 100 clean room, rinsed three times with ASTM Type I water, and filled with 0.56 M HNO_3 and soaked at room temperature for 7 days. After the soaking period, the bottles & tubs are emptied and rinsed five times with ASTM Type I water.

10.1.6 Drying Step-all sampling and analytical supplies are dried in the clean room or in a Class 100 acrylic drying cabinet and double or triple bagged before being stored.

10.1.7 Bulk Nitric Acid Soak-supplies that cannot be heated in the HCl step are soaked in covered tubs with separately prepared 0.56M HNO_3 at room temperature for 7 days, rinsed and dried as described above.

10.2 Preparation of Gold-Coated Bead Traps

[Note: The following sections detail the steps for construction of gold-coated bead traps for collection of vapor-phase Hg in field studies. Depending upon the scope of the mercury sampling to be performed, it may be cost-effective to purchase traps or trap-making supplies from a commercial source.]

10.2.1 Preparation of Gold-Coated Beads and Trap

10.2.1.1 Borosilicate glass beads (1 mm diameter) are coated with a gold plasma generated under vacuum using a sputter coater. The thickness of the gold coating produced should be approximately 300 angstrom. The operating manual for the sputter coater should be consulted for the appropriate settings to obtain this thickness.

10.2.1.2 Quartz tubes are indented using a glass-blowing torch. Three radial indentations are made about 2.5 cm from one end of a 10 centimeter long tube.

10.2.1.3 All components of the gold bead traps are heated in a muffle furnace to remove any Hg prior to assembling traps. The gold-coated beads are baked at 500°C for one hour, the quartz wool at 600°C for one hour, and the quartz tubes at 700°C for one hour.

10.2.1.4 Teflon® heat-shrink tubing (0.25 in. diameter after shrinking), is cut into 1.25 in. pieces and acid cleaned with a bulk HNO_3 soak (see Section 10.1.7).

10.2.2 Construction of Trap

10.2.2.1 A small amount of quartz wool is rolled into a ball and placed in the quartz tube so that it rests on the indentations forming a short (~0.25 cm) plug. About 0.7 g of the gold-coated beads are added to the quartz tube on top of the quartz wool. A second ball of quartz wool is placed in the quartz tube so that it rests on top of the beads. Traps should be packed as tightly as possible without breaking the quartz wool fibers. Three more radial indentations in the quartz tube are made just beyond the second quartz wool plug.

[Note: Best results are obtained by maintaining the integrity of the quartz wool fibers when rolling and compacting the wool into the quartz tube. Also, loosely packed traps may result in air flowing around the beads and not contacting the gold surfaces.]

10.2.2.2 Teflon® heat-shrink tubing is attached to both ends of the trap so that about half of the tubing extends from the trap. The Teflon® endplugs are inserted into the Teflon® heat-shrink tubing.

10.2.2.3 Plastic tubes are used as storage containers for each individual trap with endplugs.

10.2.2.4 Each trap is labeled with a unique number to identify and monitor the performance of the trap.

10.2.3 Trap Conditioning and Testing

10.2.3.1 New traps are 'conditioned' prior to use by drawing air through the trap at 0.3 Lpm for 30 minutes and then 'blanked' by heating the trap to 500°C for five minutes while an inert gas (i.e., He) flows through the trap at 0.3 Lpm. The conditioning procedure is performed twice prior to testing the trap.

10.2.3.2 New traps are evaluated for their reproducibility in collecting vapor-phase Hg and for their blank levels prior to use.

10.2.3.3 Traps to be used in vapor-phase Hg sample collection are prepared by blanking the trap, Teflon®-taping the endplugs to the trap, placing the trap in the plastic storage tube, heat sealing the tube in polyethylene, then placing two gold traps for a sample in a resealable polyethylene bag.

10.3 Preparation of Glass Fiber Filters

[Note: Glass fiber filters used for collection of particle-phase Hg samples must be heated prior to use to release any Hg from the filter matrix.]

10.3.1 The glass fiber filters are placed in a clean crucible with a lid and heated in a muffle furnace at 500 °C for one hour.

10.3.2 After cooling for one hour in the muffle furnace but still hot, the filters are transferred from the crucible to an acid cleaned Teflon® jar (50 mm diameter) using acid cleaned Teflon® forceps. The lid to the Teflon® jar is sealed with Teflon® tape, and the jar is triple-bagged and stored in the clean room until needed.

10.3.3 Twenty percent of each batch of glass fiber filters used for particle-phase Hg samples and blanks are kept for preparation of standard addition filters used for CVAFS instrument calibration as described in Section 12.6.3.

11. Collection of Ambient Air Samples

[Note: A basic concern regarding sample collection is the potential for contamination. Absolute adherence to clean sampling protocols is essential. This includes, but is not limited to: (1) all supplies with which samples come into contact must be acid cleaned, (2) all sample containers must be handled with particle-free gloved hands at all times, (3) all sample containers must be bagged before and after sample collection, and (4) the operator must stand downwind of the sample during all phases of sample installation and removal.

In addition, all sample collection procedures (i.e. loading filters into filter packs) should be conducted outdoors (in the case that a Class 100 laboratory is unavailable on-site). If atmospheric mercury sampling is to be performed in locations that experience extreme weather conditions, additional measures can be taken to provide a 'clean' environment indoors for sample handling. Small laminar-flow hoods in site trailers have been used with good results for loading and unloading sample filters from filter packs.

This section describes the methods for collection of vapor and particle phase Hg samples. The configuration of the sampling equipment is described first followed by the specific procedures for collection of vapor and particle phase Hg, respectively. In the following, the term 'gold trap' is used to refer to traps made from gold-coated beads, gold-coated sand and/or a solid gold matrix which have been shown to produce equivalent results.]

11.1 The Sampling Equipment

11.1.1 The pumps used for collection of mercury samples in ambient air should be specially designed for trace-level pollutant sampling. High efficiency oilless, brushless pumps should be used and protected from weather (i.e., the pump housing should be well sealed from rain, insulated and heated during the winter, and fan cooled during the summer).

11.1.2 A fiberglass enclosure is used as the 'sample box' to house the filter packs and gold traps during sample collection (see Figure 1).

11.1.3 The box is mounted on a pole or tower at least 3 meters above ground level. Galvanized steel provides sufficient strength to support the sample box in high winds and may be wrapped with vinyl tape to prevent contamination from the metal surface.

11.1.4 Polyethylene tubing with quick connect couplings are used to connect the vacuum lines from the pump to the sample box.

11.1.5 For particle-phase mercury, a dry test meter (DTM) is connected to the vacuum line between the pump and the sample box for direct measurement of the volume of air sampled (in L).

11.1.6 Inside the sample box flexible latex tubing with quick connect couplings are used to connect the vacuum lines to the filter packs for particle-phase Hg. For vapor-phase Hg a piece of Teflon® tubing is attached to the end of the flexible latex tubing for connecting to the gold traps during sampling.

11.1.7 Moisture on gold surface interferes with the amalgamation of Hg. Therefore, condensation during collection of vapor-phase Hg must be prevented. To prevent condensation in the gold traps during sampling, a heat tube is used to keep the traps above ambient temperature. The heat tube is constructed from heat tape wrapped around a metal tube, insulated and covered with heat-shrink electrical tubing and

electrical tape. The heat tube assembly is plugged into a variable voltage transformer to provide constant low heat to warm the trap.

11.1.8 The 47 mm Teflon® filter packs used for collection of vapor- and particle phase Hg are an assemblage of three main components—a threaded inlet, a filter support base with ¼ inch tube ferrule nut, and a clampdown nut to connect the inlet to the filter holder. For vapor-phase Hg a closed inlet filter pack with approximately 4" of ¼ inch Teflon® tubing is used to extend the air inlet several inches from the bottom of the sample box. For particle phase Hg an open inlet filter pack is used that protrudes several inches through the sample box during sampling and a plastic quick connect coupling is used for connection of the outlet to the vacuum line.

11.1.9 Rotameters calibrated for 0.3 and 30 Lpm are used initially to set the flow rate for vapor and particle-phase Hg respectively. To prevent potential contamination of the sample by the rotameter, separate 'flow check' filter packs are attached to the rotameters for this procedure. The flow check filter packs have closed inlets with quick connect couplings on the inlet tubing for connection to the rotameter.

11.1.10 A field test data sheet (FTDS) is used to record all field activities.

11.2 Collection of Vapor Phase Hg Samples

[Note: Collection of vapor-phase mercury in ambient air takes advantage of the amalgamating property of mercury to a gold surface. The amalgamation process requires a low flow rate to allow adsorption of the mercury in the air to the gold surface of the trap. A nominal flow rate of 0.3 Lpm is used to collect vapor phase Hg onto gold traps. A mass flow controller is employed to ensure a constant flow rate throughout the sampling period and the flow rate is checked both at the beginning and at the end of the sampling period with a calibrated rotameter. The volume of air sampled is determined from the average of the flow rate measurements and the sample duration. To minimize the potential for trap problems (interferences and condensation) the volume of air sampled should be kept at the minimum required to accurately quantify vapor-phase Hg. Checks of the flow rate also test for leaks and obstructions in the vacuum lines.

Vapor phase Hg samples are collected using two gold traps in series as a quality control measure. The outlet from the first trap ('A' or 'sample' trap) is connected to the inlet of the second trap ('B' or 'back' trap) using Teflon® tubing. Any breakthrough from the first trap is collected on the second trap. The two traps are attached to a Teflon® filter pack containing a glass fiber filter to prevent intrusion of particulate matter into the gold traps. Breakthrough can be minimized by limiting the sample volume collected through the traps.]

11.2.1 Flow check procedure

11.2.1.1 The flow rate through the gold traps is set to 0.3 Lpm before each sample event using a rotameter calibrated for 0.3 Lpm. To prevent potential contamination of the sample by the rotameter, a separate flow check filter pack and gold trap are attached to the rotameter for this procedure. The flow check glass fiber filter should be replaced regularly but may be reused several times.

11.2.1.2 The sampling pump is allowed to warm up for at least 15 minutes prior to any flow measurement and/or adjustment.

11.2.1.3 The flow check filter pack and gold trap are placed in the sampling box and the vacuum line connected to the gold trap. The rotameter is connected to the inlet of the filter pack. After the system has been allowed to stabilize, the flow rate is adjusted to 0.3 Lpm and is recorded on the FTDS.

The rotameter is disconnected from the filter pack and the gold trap disconnected from the vacuum line. The flow check filter pack and gold traps are removed from the sampling box.

11.2.2 Sample installation procedure

[Note: During all phases of sample set-up and removal, the operator stands downwind of the sample in order to prevent contamination by shedding particles from clothing, etc. In addition, particle-free gloves are worn when handling gold bead traps and prefilters.]

11.2.2.1 An acid cleaned 'sample' filter pack with closed inlet is loaded with a pre-fired glass fiber filter for each new vapor phase Hg sample to be collected and placed in the sample box.

11.2.2.2 The gold traps are taken from their plastic storage tubes and the endplugs removed.

11.2.2.3 The 'A' trap is connected to the Teflon® tubing from the outlet of the filter pack. A short piece of acid-cleaned Teflon® tubing is placed in the outlet of the 'A' trap. The 'B' trap is then attached to the Teflon® tubing.

11.2.2.4 The heat tube assembly is positioned to cover the 'A' trap.

11.2.2.5 To begin the sample, the Teflon® tubing at the end of the vacuum line is attached to the outlet of the 'B' trap.

11.2.2.6 Start the pump and record the following parameters on the Hg FTDS: data, sampling location, time, ambient temperature, barometric pressure, relative humidity, mass flow control reading, flow rate, rotameter reading (if applicable), and gold-trap number. A typical Hg FTDS is documented in Figure 2.

11.2.2.7 Allow the sampler to operate for the desired time, periodically recording the variables listed above. Check flow rate at the midpoint of the sampling interval if longer than 4 hours. At the end of the sampling period, record the parameters listed in Section 11.2.2.6. If the flows at the beginning and end of the sampling period differ by more than 10 percent, mark the gold-trap cartridge as suspect.

11.2.2.8 Calculate and record the average sample rate for the gold-trap cartridge according to the following equation:

$$Q_a = \frac{Q_1 + Q_2 + \ldots Q_N}{N}$$

where:

Q_a = Average flow rate in L/minute.
$Q_1, Q_2 \ldots Q_N$ = Flow rates determined at beginning, end, and immediate points during sampling.
N = Number of points averaged.

11.2.2.9 Calculate and record the total volumetric flow for the gold-trap cartridge using the following equation:

$$V_m = \frac{(T)(Q_A)}{1{,}000}$$

where:

V_m = Total volume sampled (m^3) at measured temperature and pressure.
T = Sampling time = $T_2 - T_1$, minutes

T_2 = Stop time.
T_1 = Start time.

11.2.2.10 The total volume (V_s) at standard conditions, 25°C and 760 mmHg, is calculated from the following equation:

$$V_s = V_m \times \frac{P_A}{760} \times \frac{298}{273 + t_A}$$

where:

V_s = Total sample volume (m^3) at standard conditions, 25°C and 760 mmHg.
P_A = Average barometric pressure, mmHg.
t_A = Average ambient temperature, °C.

11.2.3 Sample recovery procedure

[Note: Particle-free gloves are worn during this procedure.]

11.2.3.1 The gold-traps are removed from the sampling box and the endplugs are replaced. The endplugs are sealed to the traps with Teflon® tape and the traps are returned to their respective plastic tubes and capped.

11.2.3.2 Labels with unique sample identification numbers are affixed to each tube. The tubes are sealed in polyethylene bags and returned to the laboratory for analysis.

11.2.3.3 The flow rate is checked after removal of the sample traps and filter pack using the procedure previously described in Section 11.2.1. The flow rate and any deviations from the standard operating procedures during removal of the sample must be recorded on the Hg FTDS.

11.2.3.4 The pump is turned off and the glass fiber prefilter is discarded. The Teflon® tubing connector should be returned to the laboratory for cleaning.

11.3 Collection of Particulate Hg Samples

[Note: Since particulate Hg occurs at ultra-trace levels in the atmosphere and Hg has a high vapor pressure, the selection of sampling flow rate and duration must be carefully considered. It is typically necessary to sample at a flow rate of 30 Lpm for 12-24 hours to collect enough particulate Hg for analysis. The volume of air sampled is measured directly using a calibrated dry test meter (DTM). In addition, the flow rate is checked both at the beginning and at the end of the sampling period with a calibrated rotameter to check for leaks or obstructions in the vacuum lines.]

11.3.1 Flow check procedure

11.3.1.1 The flow rate is checked before each sample event using a rotameter calibrated in the range of 30 Lpm. To prevent potential contamination of the sample by the rotameter, a separate flow check filter pack is attached to the rotameter for this procedure. The flow check glass fiber filter should be replaced regularly but may be reused several times.

11.3.1.2 The sampling pump is allowed to warm up for at least 15 minutes prior to any flow measurement and/or adjustment.

11.3.1.3 The flow check filter pack is placed in the sampling box. The outlet is connected to the vacuum line and the inlet to the rotameter. After the system has been allowed to stabilize, the flow rate is adjusted to 30 Lpm and is recorded on the FTDS. The flow check filter pack is then disconnected from the rotameter and vacuum line, and removed from the sampling box.

11.3.2 Sample installation procedure

[Note: During all phases of sample set-up and removal, the operator stands downwind of the sample in order to prevent contamination by shedding particles from clothing, etc. In addition, particle-free gloves are worn when handling gold bead traps and prefilters.]

11.3.2.1 An acid cleaned 'sample' filter pack with open cylinder inlet is loaded with a pre-baked glass fiber filter with the 'fibrous side' up, touching only the edge of the filter with a pair of acid cleaned Teflon® coated forceps. The filter pack is placed in the sample box.

11.3.2.2 To begin the sample, the vacuum line is connected to the outlet of the sample filter pack.

11.3.2.3 Start the pump and record the following parameters on the Hg Field Test Data Sheet (FTDS): data, sampling location, time, ambient temperature, barometric pressure, relative humidity, dry gas meter reading, flow rate, rotameter reading (if applicable), gold-trap number and dry gas meter serial number. A typical Hg FTDS is documented in Figure 2.

11.3.2.4 Allow the sampler to operate for the desired time, periodically recording the variables listed above. Check flow rate at the midpoint of the sampling interval if longer than 4 hours. At the end of the sampling period, record the parameters listed in Section 11.3.2.3. If the flows at the beginning and end of the sampling period differ by more than 10 percent, mark the filter cartridge as suspect.

11.3.2.5 Calculate and record the average sample rate for the filter cartridge according to the following equation:

$$Q_a = \frac{Q_1 + Q_2 + \ldots Q_N}{N}$$

where:

Q_a = Average flow rate in L/minute.
$Q_1, Q_2 \ldots Q_N$ = Flow rates determined at beginning, end, and immediate points during sampling.
N = Number of points averaged.

11.3.2.6 Calculate and record the total volumetric flow for the gold-trap cartridge using the following equation:

$$V_m = \frac{(T)(Q_a)}{1{,}000}$$

where:

V_m = Total volume sampled (m^3) at measured temperature and pressure.
T = Sampling time = $T_2 - T_1$, minutes
T_2 = Stop time.
T_1 = Start time.

11.3.2.7 The total volume (V_S) at standard conditions, 25°C and 760 mmHg, is calculated from the following equation:

$$V_s = V_m \times \frac{P_A}{760} \times \frac{298}{273 + t_A}$$

where:

V_S = Total sample volume (m^3) at standard conditions, 25°C and 760 mmHg.
P_A = Average barometric pressure (mmHg) during sampling.
t_A = Average ambient temperature (°C) during sampling.

11.3.3 Sample recovery procedure

[Note: Particle-free gloves are worn during this procedure.]

11.3.3.1 The sample filter is removed from the filter pack and placed in an acid cleaned petri dish using acid-cleaned Teflon®-coated forceps, touching only the edge of the filter.

11.3.3.2 The petri dish is sealed with Teflon® tape and a label with a unique sample identification number is affixed to the cover of the petri dish. The petri dish is double bagged and returned to the laboratory for analysis.

11.3.3.3 The flow rate is checked after removal of the sample Hg traps using the procedure previously described in Section 11.3.1. The flow rate and any deviations from the standard operating procedures during removal of the sample must be recorded on the Hg FTDS.

11.4 Sample Storage

11.4.1 Vapor-phase Hg samples are stored at room temperature (away from heat sources) until analyzed.

11.4.2 Particle-phase Hg filters are stored in a freezer at -40°C until analyzed.

12. Analysis of Ambient Air Samples

12.1 Introduction

12.1.1 This section describes the methods for analysis of vapor and particle phase Hg samples. Dual-amalgamation cold vapor atomic fluorescence spectrometry (CVAFS) is used to determine the amount of Hg collected for both types of samples.

12.1.2 The analytical system is described first followed by the specific procedures for analysis of vapor and particle phase Hg, respectively.

[Note: In the following, the term 'gold trap' is used to refer to traps made from gold-coated beads, gold-coated sand and/or a solid gold matrix which have been shown to produce equivalent results.]

11.3.1.3 The flow check filter pack is placed in the sampling box. The outlet is connected to the vacuum line and the inlet to the rotameter. After the system has been allowed to stabilize, the flow rate is adjusted to 30 Lpm and is recorded on the FTDS. The flow check filter pack is then disconnected from the rotameter and vacuum line, and removed from the sampling box.

11.3.2 Sample installation procedure

[Note: During all phases of sample set-up and removal, the operator stands downwind of the sample in order to prevent contamination by shedding particles from clothing, etc. In addition, particle-free gloves are worn when handling gold bead traps and prefilters.]

11.3.2.1 An acid cleaned 'sample' filter pack with open cylinder inlet is loaded with a pre-baked glass fiber filter with the 'fibrous side' up, touching only the edge of the filter with a pair of acid cleaned Teflon® coated forceps. The filter pack is placed in the sample box.

11.3.2.2 To begin the sample, the vacuum line is connected to the outlet of the sample filter pack.

11.3.2.3 Start the pump and record the following parameters on the Hg Field Test Data Sheet (FTDS): data, sampling location, time, ambient temperature, barometric pressure, relative humidity, dry gas meter reading, flow rate, rotameter reading (if applicable), gold-trap number and dry gas meter serial number. A typical Hg FTDS is documented in Figure 2.

11.3.2.4 Allow the sampler to operate for the desired time, periodically recording the variables listed above. Check flow rate at the midpoint of the sampling interval if longer than 4 hours. At the end of the sampling period, record the parameters listed in Section 11.3.2.3. If the flows at the beginning and end of the sampling period differ by more than 10 percent, mark the filter cartridge as suspect.

11.3.2.5 Calculate and record the average sample rate for the filter cartridge according to the following equation:

$$Q_a = \frac{Q_1 + Q_2 + \ldots Q_N}{N}$$

where:

Q_a = Average flow rate in L/minute.
$Q_1, Q_2 \ldots Q_N$ = Flow rates determined at beginning, end, and immediate points during sampling.
N = Number of points averaged.

11.3.2.6 Calculate and record the total volumetric flow for the gold-trap cartridge using the following equation:

$$V_m = \frac{(T)(Q_a)}{1{,}000}$$

where:

V_m = Total volume sampled (m^3) at measured temperature and pressure.
T = Sampling time = $T_2 - T_1$, minutes
T_2 = Stop time.
T_1 = Start time.

11.3.2.7 The total volume (V_s) at standard conditions, 25°C and 760 mmHg, is calculated from the following equation:

$$V_s = V_m \times \frac{P_A}{760} \times \frac{298}{273 + t_A}$$

where:

V_s = Total sample volume (m^3) at standard conditions, 25°C and 760 mmHg.
P_A = Average barometric pressure (mmHg) during sampling.
t_A = Average ambient temperature (°C) during sampling.

11.3.3 Sample recovery procedure

[Note: Particle-free gloves are worn during this procedure.]

11.3.3.1 The sample filter is removed from the filter pack and placed in an acid cleaned petri dish using acid-cleaned Teflon®-coated forceps, touching only the edge of the filter.

11.3.3.2 The petri dish is sealed with Teflon® tape and a label with a unique sample identification number is affixed to the cover of the petri dish. The petri dish is double bagged and returned to the laboratory for analysis.

11.3.3.3 The flow rate is checked after removal of the sample Hg traps using the procedure previously described in Section 11.3.1. The flow rate and any deviations from the standard operating procedures during removal of the sample must be recorded on the Hg FTDS.

11.4 Sample Storage

11.4.1 Vapor-phase Hg samples are stored at room temperature (away from heat sources) until analyzed.

11.4.2 Particle-phase Hg filters are stored in a freezer at -40°C until analyzed.

12. Analysis of Ambient Air Samples

12.1 Introduction

12.1.1 This section describes the methods for analysis of vapor and particle phase Hg samples. Dual-amalgamation cold vapor atomic fluorescence spectrometry (CVAFS) is used to determine the amount of Hg collected for both types of samples.

12.1.2 The analytical system is described first followed by the specific procedures for analysis of vapor and particle phase Hg, respectively.

[Note: In the following, the term 'gold trap' is used to refer to traps made from gold-coated beads, gold-coated sand and/or a solid gold matrix which have been shown to produce equivalent results.]

12.2 The Analytical System

12.2.1 The analytical system consists of a pair of gold traps in series, a thermal desorption system, a CVAFS mercury detector, an integrator to convert peak voltage to peak area, and an inert carrier gas (He or Ar).

12.2.2 The dual-amalgamation technique requires two gold traps in series: a 'sample' trap and an 'analytical' trap. This technique has two main advantages: it virtually eliminates interferences due to organics and Cl_2 from the sample trap and provides greater analytical precision because the same analytical trap is being used to introduce the Hg into the detector for all the samples.

12.2.3 The thermal desorption system includes a pair of nickel-chromium coils each with a variable transformer to regulate the output, a pair of small axial fans to cool the coils and traps quickly, and a programmable circuit controller to coordinate the trap heating and cooling cycles.

12.2.4 Power supplied to the CVAFS should be stabilized by a power conditioner to reduce line voltage fluctuations. The instrument is left on continuously to stabilize the UV lamp and maintain consistency from one day to the next. Operating manuals for the CVAFS instruments describe in detail the operation and maintenance for the specific analyzer.

12.2.5 The carrier gas should be mass-flow controlled to produce a more consistent peak response. Ultra-high purity gas should be used and a gold trap placed upstream of the sample and analytical traps to remove any remaining traces of Hg in the gas.

12.2.6 The vapor phase Hg analytical system requires an injection port and gas-tight syringe (100 μL) to introduce Hg standards into the sample train.

12.2.6.1 A small amount (2-3 mL) of liquid metallic Hg in a closed 150 mL flask is sufficient to generate Hg saturated air above the liquid surface for vapor-phase Hg analysis. The flask is immersed in a constant temperature (+/–0.1 °C) circulating water bath. A certified immersion thermometer should be used to monitor the temperature of the air above the mercury in the flask. The temperature of the air in the flask must be maintained below room temperature otherwise, the Hg will condense on the walls of the injection apparatus.

12.2.6.2 The gas-tight 100 μL syringe should rest on top of the flask with the needle portion protruding through a Minnert valve into the flask air. Hg saturated air from the flask should be drawn up into the syringe and allowed to equilibrate.

12.2.6.3 An injection port with Minnert valve and Teflon-coated septum are used for injecting Hg saturated air onto gold traps in the analytical system. The port is placed inline for the calibration process and then removed.

12.2.6.4 Vapor phase analysis is done outside of the clean room.

12.2.7 The particle-phase Hg analytical system requires an aqueous purging system which consists of: (i) an acid cleaned glass impinger and bubbler system (30 mL capacity) with Teflon® stopcock, (ii) a soda lime trap to capture acid gases from the bubbling solution, (iii) gold traps for collection of volatilized Hg from the extracts, and (iv) N_2 carrier gas for the system.

12.3 Preparation of Reagents and Standards

12.3.1 Deionized water-Deionized water, with a resistivity of 18.2 MΩ cm^{-1}, is prepared using a water purification system (e.g., Milli-Q) from a prepurified (reverse osmosis) water source. This purified water conforms to the standards for ASTM Type I water.

12.3.2 Hydrochloric acid-containing low concentrations of Hg are used to prepare BrCl and $SnCl_2$ solutions. EM Science SupraPur® HCl is recommended.

12.3.3 Bromine Monochloride-(BrCl) is made from high purity potassium bromide (EM Science) and potassium bromate (Baker). The bromine salts (10.8 g of KBr and 15.2 g of $KBrO_3$) are weighed using acid cleaned weigh boats and spatulas. In the clean room laminar flow exhaust hood, an acid cleaned magnetic stir bar is placed in a 1L glass bottle of concentrated, high purity HCl. The KBr is added while stirring the acid with a magnetic stir plate, and allowed to dissolve completely (approx. 1 hour). The $KBrO_3$ is then added slowly while stirring. After all of the salts have been added, the solution is allowed to mix until all visible particles have dissolved (1-2 hours). The solution should be deep yellow in color. If there is no color (or very faint) then the solution should be remade because the BrCl has undergone reduction and will not have sufficient strength to oxidize all mercury species to Hg^{+2}. The BrCl is stored at room temperature in the clean room exhaust fume hood.

[Caution: BrCl should always be prepared in an exhausting fume hood because hazardous chlorine (Cl_2) gas is produced.]

12.3.4 Hydroxylamine hydrochloride-($NH_2OH \cdot HCl$) solution is prepared by dissolving 75.0 g of $NH_2OH \cdot HCl$ (EM Science) in ASTM Type I water in an acid cleaned 250 mL volumetric flask. The solution is stored in an opaque Teflon® bottle and refrigerated when not being used.

12.3.5 Stannous chloride-(SnCl2) solution is prepared by placing 200.0 g of $SnCl_2 \cdot 2H_2O$ (Fluka) in an acid cleaned 1000 mL volumetric flask. In the clean room laminar flow exhaust fume hood, 100 mL of concentrated, high purity HCl is slowly added. After most of the $SnCl_2$ has dissolved (it does not dissolve completely), the solution is brought up to volume with ASTM Type I water. The $SnCl_2$ solution is stored in an acid cleaned, opaque Teflon® bottle and refrigerated when not being used.

12.3.6 Working mercury standard-solution used for CVAFS instrument calibration is prepared by sequential dilution of a commercial primary standard of 1000 μg Hg/mL. A secondary standard with a concentration of 1000 ng Hg/mL is made by adding 100 μL of the primary standard and 5 mL of BrCl (see Section 12.4.3) to a 100 mL volumetric flask, and diluting to the 100 mL total volume with ASTM Type I water. The secondary standard solution is remade at least once per year. The working standard has a concentration of 2 ng Hg/mL in 1 percent BrCl and is prepared by adding 200 μL of the secondary standard and 1000 μL of BrCl to a 100 mL volumetric flask and diluting to 100 mL total volume with ASTM Type I water. All standard solutions are stored in the dark at 5°C.

12.3.7 Nitric acid-(HNO_3) extraction solution (10% HNO_3, 1.6 M) is used for microwave digestion of particulate Hg samples. In the clean room laminar-flow exhausting hood 100 mL of high purity concentrated HNO_3 (EM Science SupraPur®) is slowly added to 750 mL of ASTM Type I water in a 1000 mL volumetric flask. The solution is mixed, allowed to cool, and brought up to 1000 mL with ASTM Type 1 water. The extraction solution is stored in an acid cleaned repipetting bottle in the clean room exhaust hood.

12.4 Summary of Dual-amalgamation CVAFS Analytical Procedure

12.4.1 The analytical procedure for detection of mercury using CVAFS includes three main steps.

12.4.2 First, the sample trap is placed in the analytical system and heated to release the collected mercury. The released mercury is entrained by the gas stream, carried into the analytical trap where it is amalgamated to the gold surface. Second, the analytical trap is heated to release the mercury which

then flows into the CVAFS detector cell. Third, the mercury in the detector cell absorbs UV light and the resulting fluorescence is converted to a voltage proportional to the amount of Hg detected by a photomultiplier tube.

12.4.3 An integrator then converts the voltage response to peak area.

12.5 Analysis of Vapor Phase Hg Samples

12.5.1 Injection system calibration

12.5.1.1 The injection system is conditioned before each day of analysis to ensure precise and reproducible results. The process includes the following steps: (i) condition the syringe by flushing it three times with Hg saturated air, filling it to capacity, and allowing it to equilibrate for 15 minutes, (ii) place a new septum in the injection port and condition them both with multiple injections of Hg saturated air before initiating calibration.

12.5.1.2 The flask should be periodically flushed (approx. once per month) with pre-filtered N_2 gas in order to displace any oxygen which may oxidize the surface of the liquid mercury and prevent volatilization. Also, the Minnert valve for the syringe on the flask should be above the level of the water in the water bath. If water gets into the flask, it should be purged as described above.

12.5.2 CVAFS instrument calibration

12.5.2.1 A calibration curve, generated by injection of different volumes of Hg saturated air onto a gold trap, must be performed before each analysis. The amounts of Hg injected for the calibration curve should be tailored to the expected value of the samples to be analyzed. Table 1 shows an example calibration curve for 24 hour vapor-phase Hg samples consisting of five different amounts of Hg injected: 0, 0.2, 0.4, 0.8 and 1.6 ng of Hg.

12.5.2.2 To generate standard injections for the calibration curve, the conditioned injection port is placed in the analytical train in front of the gold trap to be used for generating the standard curve (called the "standard trap"). A specified volume of Hg saturated air is withdrawn from the flask using the gas tight syringe and injected onto the blanked standard trap through the injection port valve. After the injection the syringe is returned to the flask and filled to capacity until the next injection. The temperature of the air in the flask is recorded for each injection to calculate the actual amount of Hg injected.

12.5.2.3 A calibration curve is performed beginning with a zero point (0 μL) and continuing in ascending order to the highest amount. The zero point of the calibration curve is generated in the same manner described above except that no Hg saturated air is injected into the port. The amount of Hg emitted from the needle tip and the injection apparatus and adsorbed onto the gold trap is called the zero point (typically between 1-5 pg Hg).

12.5.2.4 The response for each standard injection is obtained by dual-amalgamation CVAFS described in Section 12.2.

12.5.2.5 At any given temperature the vapor density of Hg can be calculated using the Ideal Gas Law and the saturation vapor pressure of Hg. A table of vapor densities versus temperature is used to determine the amount of Hg injected for the volume of each standard injection. Table 1 illustrates the amount of Hg delivered during a typical injection procedure used to generate a standard curve at a flask temperature of 16.6°C.

12.5.2.6 The slope of the calibration curve is calculated using linear regression. The 0 μL injection response is subtracted from each of the points on the curve. The CVAFS analytical system is linear and the coefficient of determination (r^2) should be 0.999 or better and each of the points on the

curve should be predicted by the slope within 5 percent of their actual value. If these criteria are not met, the specific points that are errant should be repeated and the linear regression recalculated.

12.5.2.7 The injection port and standard trap are removed from the analytical train after calibration.

12.5.3 Sample Analysis

12.5.3.1 After a satisfactory calibration curve for the CVAFS is obtained, sample traps are analyzed by dual amalgamation CVAFS as described in Section 12.2.

12.5.3.2 Control standards should be analyzed at regular intervals during the analysis of samples to detect any drift in the response or change in sensitivity of the CVAFS instrument. Control standards are generated in the same manner as the calibration standards described above. The volume of Hg saturated air injected for a control standard should be representative of the Hg concentration of the samples being analyzed.

12.5.3.3 The predicted value of the control standards should be within 5% of the calibration curve before continuing to analyze samples. If subsequent control standards also deviate by more than 5% from the calibration curve, it is likely that the analyzer sensitivity has changed and a second calibration curve should be generated. Sample analysis should only continue after recalibration has met the criteria outlined in 12.5.2.6.

12.6 Analysis of Hg in Particulate Samples

12.6.1 Microwave Digestion System

12.6.1.1 The use of microwave digestion to extract samples for analysis allows rapid heating and elevated pressures for shorter preparation time in a safer and more consistent manner compared to traditional procedures.

12.6.1.2 The microwave digestion system must use Teflon® vessels and be capable of monitoring and controlling pressure and temperature inside the vessels.

12.6.1.3 The microwave should be programmable for the target pressure and temperature, and for maintaining them for a specified time. The operating manual for the microwave digestor should be consulted for programming, safety and maintenance of this equipment.

12.6.2 Preparation of Standard Addition and Sample Filters for Extraction

[Note: All preparation of filters for particulate Hg analysis must be performed in a Class 100 clean room. Filters are removed from storage in a -40°C freezer and allowed to equilibrate to room temperature in the clean room. Acid-cleaned Teflon® microwave vessels and Teflon®-coated forceps are needed for the filter preparation. Calibration standards using filter media are prepared at the same time as the sample filters to be analyzed. The microwave vessels should be labeled with the appropriate identifier for the contents of each vessel.]

12.6.2.1 Glass fiber filters heated and stored with the sample filters as described in Section 10.3 are used as standard addition filters for calibration of the CVAFS instrument. In the clean room, the standard filters are placed into acid cleaned microwave vessels using acid cleaned Teflon®-coated forceps. The filters are spiked with appropriate volumes of the 2 ng/mL Hg working standard to generate a calibration curve. Table 2 shows the volume of Hg standard added to the filters in the microwave vessels to produce a typical calibration curve for 24 hour particulate Hg samples. The Hg working standard solution is pipetted directly onto the filter and absorbed by the filter.

12.6.2.2 All sample filters to be analyzed should be prepared at the same time and handled identically according to the following procedures. Each petri dish containing a sample filter is removed from the sealed polyethylene bag and the Teflon® tape around the dish removed and discarded. The filter is removed from the petri dish using acid cleaned Teflon®-coated forceps touching only the edge of the filter to avoid the center area with the collected particulate matter. The filter is carefully folded into quarters using two pairs of forceps and placed into the appropriately labeled vessel. The forceps are cleaned after touching each sample filter by rinsing the tips in acid cleaned glass beakers of 10% HNO_3 extraction solution and ASTM Type I water.

12.6.3 Filter Extraction using Microwave Digestion

[Note: The prepared standard and sample filters are handled identically using the following microwave extraction procedure.]

12.6.3.1 In the clean room exhaust hood, the extraction solution (10% HNO_3, 1.6 M) should be prepared as described in Section 12.3. A calibrated repippetor is used to dispense 20 mL of extraction solution into each vessel.

12.6.3.2 Each vessel should be weighed both prior to and following the microwave digestion to ensure no loss of sample extract during the procedure.

12.6.3.3 The prepared vessels can then be removed from the clean room and placed in the microwave oven for digestion. The pressure and temperature monitoring sensors should be appropriately attached and the control program initiated. Optimal results for digestion of glass fiber filters for mercury determination have been obtained by heating the samples at 160°C and 70 psi for 20 minutes.

12.6.3.4 After the microwave digestion procedure is complete, the vessels should be allowed to cool until the pressure inside the control vessel is about 1-2 psi. then removed from the microwave and returned to the clean room.

12.6.4 Oxidation of Digested Filters

12.6.4.1 In the clean room exhaust hood, the vessels are opened carefully and 0.5 mL of BrCl (see Section 12.3.3) is added to the extract in each vessel to oxidize all of the mercury in solution to Hg^{2+}.

12.6.4.2 The capped vessels are gently swirled to mix the vessel contents and allowed to react for a least 1 hour.

12.6.5 Aqueous Purging System

[Note: In the clean room exhaust hood an aqueous purging system is used to volatilize Hg° from the filter extraction solution onto gold traps for quantification by CVAFS. The flow rate of the carrier gas through the purging system should be maintained at 0.5 Lpm.]

12.6.5.1 A soda lime trap is made from an acid cleaned borosilicate glass tube (15 cm long, 15 mm outer diameter) or from Teflon® tubing of similar dimensions. Acid cleaned Teflon® tubing and compression fittings are used to attach the trap to the impinger exhaust.

12.6.5.2 Before beginning analysis the tube is packed with high purity grade soda lime using a small amount of glass wool (1/2") as endplugs. The soda lime trap is then conditioned by purging 20 mL of a 5% HCl solution (0.3 M) for 30 minutes.

12.6.5.3 Purging solution is prepared by adding 1 mL $SnCl_2$ (Section 12.3.5) to 20 mL of ASTM Type I water in a bubbler and purging for 15 minutes to remove any Hg in the solution or purging system.

12.6.6 Volatilization and Recapture Procedure

[Note: The following volatiliztion and recapture procedure is used to liberate Hg° from the oxidized filter extracts and collect it on gold traps for quantification by CVAFS.]

12.6.6.1 A 5 mL aliquot of the oxidized filter extract is pipetted from the Teflon® vessel into 20 mL of the bubbling solution prepared above.

12.6.6.2 To reduce the halogens in the extract, 0.1 mL $NH_2OH \cdot HCl$ (see Section 12.3.4) is pipetted into the bubbler. The bubbler is swirled briefly to mix the solution and allowed to react for 5 minutes.

12.6.6.3 A blanked gold trap is attached to the end of the soda lime trap connected to the impinger for collection of mercury from the bubbled solution.

12.6.6.4 To reduce the oxidized mercury in solution to volatile Hg°, 0.5 mL $SnCl_2$ is pipetted into the bubbler which is immediately attached to the impinger and purged onto the gold trap for 7 minutes.

12.6.7 CVAFS Instrument Calibration using Standard Addition Filters

12.6.7.1 A calibration curve, generated using the standard addition filter extracts, must be performed before each analysis. A calibration curve is performed beginning with the reagent blank (no Hg standard added to filter) and continuing in ascending order to the highest concentration standard.

12.6.7.2 The volatilization and recapture procedure described in Section 12.6.6 is used to collect the Hg in solution for each standard addition filter onto gold traps. The amount of Hg volatilized from the extracts is determined by analysis of the gold trap using dual-amalgamation CVAFS as described in Section 12.4.

12.6.7.3 The concentration of Hg in the extraction solution for each of the standard addition filters is determined from the amount of 2 ng/mL mercury standard added to the filter, the total volume of reagents added, and the volume of solution analyzed. The actual amount of mercury in 5 mL of standard filter extracts are as shown in Table 2.

12.6.7.4 The slope of the calibration curve is calculated using linear regression. The reagent blank response is subtracted from each of the points on the curve. The CVAFS analytical system is linear and the coefficient of determination (r^2) should be 0.99 or better and each of the points on the curve should be predicted by the slope within 10% of their actual value. If these criteria are not met, the specific points that are errant should be repeated and the linear regression recalculated.

12.6.8 Sample Analysis

12.6.8.1 After a satisfactory calibration curve for the CVAFS is obtained using standard addition filter extracts, Hg in each sample filter extract is volatilized and recaptured using the procedure described in Section 12.6.2.

12.6.8.2 The gold traps are analyzed by dual amalgamation CVAFS as described in Section 12.4 to quantify the amount of Hg in the sample filter extract.

12.6.8.3 Control standards should be analyzed at regular intervals during the analysis of samples to detect any drift in the response or change in sensitivity of the CVAFS instrument. Control standards are generated in the same manner as the calibration standards described above. The standard addition

filter used for a control standard should be representative of the Hg concentration of the samples being analyzed.

12.6.8.4 The control standards response should be within 10% of the calibration curve before continuing to analyze samples. If subsequent control standards also deviate by more than 10% from the calibration curve, it is likely that the analyzer sensitivity has changed and a second calibration curve should be generated. Sample analysis should continue after recalibration.

13. Calculation of Mercury Concentrations in Ambient Air

13.1 Calculation of Vapor Phase Mercury Concentrations

13.1.1 Conversion of vapor phase mercury analysis results to ambient concentrations requires the results from analysis (samples, blanks and calibration curve) and flow rate and duration data from field logs. For example calculations see Section 13.1.2.

13.1.1.1 Vapor phase mercury concentrations in ambient air are reported in ng/m^3.

13.1.1.2 The amount of mercury collected on a Au-coated bead sample trap (ng Hg) is calculated from the integrator response for the sample [in Peak Area Units (PAU)] multiplied by the slope of the calibration curve, which is in ng Hg/PAU.

13.1.1.3 The amount of mercury collected on a Au-coated bead sample trap is blank corrected by subtracting the average amount of mercury collected on field blank traps. Field blanks are described in Section 14.2.2.

13.1.1.4 Vapor phase mercury samples are typically collected using 2 Au-coated bead sample traps in series (the exit from the first trap is connected to the inlet of the second trap). The total amount of Hg collected for the sample is then calculated by simple addition of the blank corrected amounts of mercury from the two sample traps.

13.1.1.5 The volume (m^3) of air sampled is calculated by multiplying the flow rate through the sample traps (in cm^3/min.) by the duration of the sample (min.) and converting the product from cm3 to m3.

13.1.1.6 The ambient vapor phase mercury concentration in ng Hg/m^3 is calculated from the total blank corrected ng of Hg for the sample traps divided by the cubic meters of air sampled.

13.1.2 Example Calculation of Ambient Vapor Phase Mercury Concentration

13.1.2.1 An example vapor phase mercury calibration curve is given in Table 3 and discussed in Section 12.5.2.

13.1.2.2 Calculation of the ng of Hg recovered from two sample traps in series:

Amount of Hg Recovered = Integrator Response x Slope of Calibration Curve

7,135,900 PAU x 1.0585E-7 ng Hg/PAU = 0.755 ng Hg
236,183 PAU x 1.0585E-7 ng Hg/PAU = 0.025 ng Hg

13.1.2.3 Calculation of the total ng of Hg for the sample:

Total Amount of Hg for sample = Σ (Sample ng Hg - Average Field Blank ng Hg)

(0.755 ng Hg - 0.015 ng Hg) + (0.025 ng Hg - 0.015 ng Hg) = 0.750 ng Hg

13.1.2.4 Calculation of the volume of air sampled at a flow rate of 0.3 Lpm and a sample duration of 24 hours, with average ambient temperature of 20°C and average barometric pressure of 750 mmHg:

Volume of Air Sampled =Flow Rate x Duration

0.3 Lpm x 24 hr. x 1,440 min./24 hr. x 10^{-3} m^3/L = 0.432 m^3

13.1.2.5 Correct total sample volume (m^3) to standard conditions of 25°C and 760 mmHg:

$$V_s = V_m \times \frac{P_A}{760} \times \frac{298}{273 + t_A}$$

$$= 0.432\ m^3 \times \frac{750}{760} \times \frac{298}{301}$$

$$= 0.432 \times 0.9868 \times 0.9900$$

$$= 0.422\ m^3 \text{ at standard temperature and pressure.}$$

13.1.2.6 Calculation of the vapor phase mercury concentration (ng Hg/m^3) for an ambient air sample at standard temperature and pressure:

Concentration = Total Amount of Hg for Sample / Standard Volume of Air Sampled

0.750 ng Hg / 0.422 m^3 = 1.777 ng Hg/m^3 at standard temperature and pressure.

13.2 Calculation of Particle-Phase Mercury Concentration

13.2.1 Conversion of particle-phase mercury analysis results to ambient concentrations requires the results from analysis (samples, blanks and calibration curve) and the volume of air sampled from field logs.

13.2.1.1 Particle-phase mercury concentrations in ambient air are reported in pg/m^3.

13.2.1.2 The amount of mercury detected for the aliquot of sample analyzed is calculated from the integrator response [in Peak Area Units (PAU)] for the sample and the reagent blank. The difference between the sample and reagent blank integrator response is multiplied by the slope of the calibration curve, which is in pg Hg/ (PAU).

13.2.1.3 The amount of mercury collected on the entire sample filter is calculated by multiplying the amount of mercury in the aliquot by the ratio of the total extraction volume of 20.5 mL (20 mL of extraction solution and 0.5 mL of BrCl) to the volume of the aliquot analyzed (5 mL).

13.2.1.4 The volume (m^3) of air drawn through the sample filter is calculated from the difference between the "on" and "off" readings for the Dry Test Meter (DTM) used to measure sample volume and adjusted by the calibration curve for the DTM display.

13.2.1.5 The particle-phase mercury concentration in pg/m^3 is calculated from the amount of mercury collected on the filter divided by the cubic meters of air sampled.

13.2.2 Example Calculation of Ambient Particle-Phase Mercury Concentration

13.2.2.1 An example particle-phase mercury calibration curve is displayed in Table 4 and discussed in Section 12.6.7.

13.2.2.2 Calculation of the pg of Hg detected for the aliquot analyzed:

Amount of Hg Detected for Aliquot =
(Sample - Reagent Blank Integrator Response) x (Slope of Calibration Curve)

(7,135,900 PAU - 168,320 PAU) x 9.1091E-5 pg Hg/PAU = 635 pg Hg in aliquot.

13.2.2.3 Calculation of the pg of Hg for the entire sample filter:

Amount of Hg for Filter = (Amount of Hg for Aliquot) x (Extraction Volume /Volume of Aliquot)

(635 pg Hg) x (20.5 mL) / (5 mL) = 2604 pg Hg for filter

13.2.2.4 Calculation of the volume of air sampled from the DTM readings with average ambient temperature of 20°C and average barometric pressure of 750 mmHg during sampling:

Volume of Air Sampled = ("Off" - "On" DTM readings) x Slope of DTM Display Calibration
(1075.6 m^3 - 1031.3 m^3) x 0.975 = 43.2 m^3

13.2.2.5 Correct total sample volume (m^3) to standard conditions of 25°C and 760 mmHg:

$$V_s = V_m \times \frac{P_A}{760} \times \frac{298}{273 + t_A}$$

$$= 43.2\ m^3 \times \frac{750}{760} \times \frac{298}{301}$$

$$= 43.2 \times 0.9868 \times 0.9900$$

$$= 42.2\ m^3 \text{ at standard temperature and pressure.}$$

13.2.2.6 Calculation of the particle-phase mercury concentration (pg Hg/m^3) for an ambient air sample at standard temperature and pressure:

Concentration = Amount of Hg for Filter / Volume of Air Sampled
2604 pg Hg / 42.2 m^3 = 61.706 pg Hg/m^3

14. Quality Assurance/Quality Control (QA/QC)

14.1 Personnel Qualifications

14.1.1 Field operators should be properly trained in the methods for ambient air sample collection as described in Section 11.

14.1.2 Field operators should routinely collect field blanks and shipping blanks to ensure that clean handling techniques are consistently employed.

14.1.3 Laboratory analysts should be properly trained in the procedures for analysis of ambient air samples as described in Section 12.

14.2 QA/QC Samples

14.2.1 Laboratory procedural blanks (LPB) are used to monitor the degree of background contamination introduced during the laboratory analysis procedures. For analysis of vapor and particle-phase Hg this blank is equivalent to the zero-point on the calibration curve and are analyzed before beginning analysis of samples.

14.2.2 Field Blanks

14.2.2.1 Field blanks are performed to determine the level of sample contamination during all phases of sample handling, including:

- Sample collection and handling in the field
- Shipment
- Storage
- Sample handling and analysis in the laboratory

14.2.2.2 Field blanks are performed using the same procedures as those described for collecting samples in Section 11. A minimum frequency of one field blank collected and analyzed per 10 samples is recommended for each sampling media. Field blank levels less than 2% of the average amount of mercury collected for a sample can be obtained using the methods described.

14.2.2.3 Vapor phase mercury field blanks are performed by placing the filter pack and attached gold bead trap in the sampling box as described for a sample, and left in the sample box for 2 minutes without the vacuum line attached. The vapor phase mercury field blank is removed from the sampling box as described for a sample and labeled appropriately.

14.2.2.4 Particle-phase mercury field blanks are performed by loading a glass fiber filter into the open-face filter pack as described for a sample. The filter pack is placed in the sampling box for 2 minutes without connecting it to the vacuum line. The particle-phase mercury field blank is removed from the filter pack as described for a sample and labeled appropriately.

14.2.3 Collocated Samples

14.2.3.1 Collocated samples are used to assess sample variability attributable to:

- Sample collection and handling in the field
- Shipment
- Storage
- Sample handling and analysis in the laboratory

14.2.3.2 Collocated sampling for a minimum of 1 per 20 samples collected is recommended to properly evaluate variability. Percent differences of less than 10% between collocated samples can be achieved using the methods described.

14.2.3.3 To collect collocated samples in the field, dual sets of sampling equipment must be used which are equivalent in all measurable ways.

14.2.4 Shipping Blanks

14.2.4.1 Shipping blanks are performed to determine the level of sample contamination during shipment and storage of samples, and therefore are only required when supplies and samples are shipped between a laboratory and a field site.

14.2.4.2 A minimum frequency of one shipping blank collected and analyzed per 10 samples is recommended for each sampling media when samples are shipped to field sites.

14.2.4.3 Shipping blank levels less than 1% of the average amount of mercury collected for a sample can be obtained using the methods described.

14.2.4.4 For a vapor phase mercury shipping blank, a gold trap is sent to the field site and back to the laboratory for analysis without ever being opened in the field.

14.2.4.5 Particle-phase mercury shipping blanks are performed by loading a glass fiber filter from the Teflon® storage jar directly into a plastic petri dish. The packaged filter is then sent to the field site and back to the laboratory for analysis, again without being opened.

14.3 Precision and Accuracy

14.3.1 Precision

14.3.1.1 Collocated samples can be used to assess the overall precision of the method (sampling and analytical precision). Precision of less than 15% can be achieved for ambient vapor phase and particle-phase mercury measurements using the methods described.

14.3.1.2 For particle-phase mercury, samples analyzed in duplicate can be used to assess analytical precision. Analytical precision for the methods described should average less than 10%.

14.3.1.3 For vapor phase mercury, samples can not be analyzed in duplicate. Repeated injections of vapor phase mercury standards can be used to assess the analytical precision which should average less than 5% for the methods described.

14.3.2 Accuracy

14.3.2.1 Accuracy can be assessed using standard reference materials (SRM) that have been analyzed in a manner identical to the field samples. However, SRMs do not currently exist for ambient vapor and particle phase mercury.

14.3.2.2 Comparison with other methods of analysis (i.e. neutron activation) or inter-laboratory comparisons can be used to assess accuracy.

14.4 Performance Criteria

A summary of typical data quality objectives for the determination of mercury concentrations by CVAFS is illustrated in Table 5.

15. References

1. Bloom, N.S. and Fitzgerald, W.F., "Determination of Volatile Mercury Species at the Picogram Level by Low-Temperature Gas Chromatography with Cold-Vapor Atomic Fluorescence Detection," *Anal. Chim. Acta.*, 208:151, 1988.

2. Burke, J., Hoyer, M., Keeler, G., Scherbatskoy, T., "Wet Deposition of Mercury and Ambient Mercury Concentrations at a Site in the Lake Champlain Basin," *Water, Air, and Soil Pollution*, 80:353-362, 1995.

3. Dumarey, R., Dams, R., and Hoste, J., "Comparison of the Collection and Desorption Efficiency of Activated Charcoal, Silver, and Gold for the Determination of Vapor phase Atmospheric Mercury," *Anal. Chem.*, 57:2638-2643, 1985.

4. Dumarey, R., Temmerman, E., Dams, R. and Hoste, J., "The Accuracy of the Vapor-Injection Calibration of Mercury by Amalgamation/Cold-Vapour Atomic Absorption Spectromery," *Anal. Chim. Acta.*, 170:337-340, 1985.

5. Dvonch, J.T., Vette, A.F., Keeler, G.J., Evans, G., and Stevens, R., "An Intensive Multi-Site Pilot Study Investigating Atmospheric Mercury in Broward County, Florida," *Water, Air, and Soil Pollution*, 80:169-178, 1995.

6. Fitzgerald, W.F., and Gill, G.A., "Sub-Nanogram Determination of Mercury by Two-Stage Gold Amalgamation and Gas Phase Detection Applied to Atmospheric Analysis," *Anal. Chem.*, 15:1714, 1979.

7. Keeler, G., Glinsorn, G., and Pirrone, N. "Particulate Mercury in the Atmosphere: It's Significance, Transport, Transformation and Sources" *Water, Air, and Soil Pollution*, 80:159-168, 1995.

8. Lamborg, C., Hoyer, M., Keeler, G., Olmez, I., and Huang, X. "Particle-Phase Mercury in the Atmosphere: Collection/Analysis Method Development and Applications," in *Mercury as a Global Pollutant: Toward Integration and Synthesis*, Watras, C. and Huckabee, J. Eds., Lewis Publishers, 1994.

9. Bloom, N.S., "Determination of Pricorgram Levels of Methylmercury by Aqueous Phase Ethylation, Followed by Cryogenic Gas Chromatography with CFAS" *Can. J. Fish Aq. Sci.*, 46:1131, 1989.

10. Bloom N.S., Prestbo E.M., Hall B. and E.J. von der Geest, "Determination of Total Gaseous Hg in the Ambient Atmosphere by Collection on Iodated Carbon, Hot Acid Digestion and CFAS" *Water, Air and Soil Pollut.*, 80:1315, 1995.

11. Vermette S., Lindberg S., and N.S. Bloom, "Field Tests for a Regional mercury Deposition Network - Sampling Design and Preliminary Test Results," *Atmos. Envion.*, 29:11, 1995.

12. Prestbo E.M., Liang L., Horvat M., and N.S. Bloom, *Recent Advances in the Analytical Techniques for the Quantification of Mercury and Mercury Compounds in Different Media*, USEPA 600-R-92-105 (1992).

TABLE 1. AMOUNT OF HG INJECTED FOR A TYPICAL VAPOR PHASE CALIBRATION CURVE

Volume of Hg Saturated Air Injected (μL)	Amount of Hg Injected (ng)
0	0
20	0.198
40	0.396
80	0.793
160	1,586

Note: Flask temperature = 16.6°C
Vapor density = 9,912 ng/cm^3
1 cm^3 = 1,000 μL

TABLE 2. AMOUNT OF HG IN 5 mL ALIQUOT ANALYZED FOR A TYPICAL PARTICLE-PHASE CALIBRATION CURVE

Volume of 2 ng/mL Hg Standard Added (μL)	Amount of Hg in 5 mL Aliquot Analyzed (pg)
0	0
200	97
400	191
1,000	465

TABLE 3. EXAMPLE VAPOR PHASE HG CALIBRATION CURVE

Hg Standard Concentration, ng Hg	Response, Peak Area Units (PAU)	Response-Zero Point, Peak Area Units (PAU)	Predicted Value, ng Hg	Percent Difference from Standard
0	41,193	0	0	
0.198	1,866,300	1,825,107	0.193	-3
0.396	3,729,482	3,688,289	0.390	-2
0.793	7,451,226	7,410,033	0.784	-1
1.586	15,083,592	15,042,399	1.592	0

Slope = 1.0585E-7 ng Hg/PAU
r^2 = 0.9999

TABLE 4. EXAMPLE PARTICLE-PHASE HG CALIBRATION CURVE

Hg Standard Concentration, ng Hg	Response, Peak Area Units (PAU)	Response-Zero Point, Peak Area Units (PAU)	Predicted Value, ng Hg	Percent Difference from Standard
0	168,320	0	0	0
97	1,144,900	976,580	89	-8
191	2,158,900	1,990,580	181	-5
465	5,204,200	5,035,880	459	-1
889	9,993,400	9,825,080	895	1

Slope = 9.1091E-5 pg Hg/PAU
r^2 = 0.9995

TABLE 5. DATA QUALITY OBJECTIVES FOR MERCURY SAMPLING AND ANALYSES

QA Criteria	QC Code	Sample Type	Frequency	Criteria	Control Action
Precision	LD1/LD2	Analytical	15%	RPD <20%	Reanalyze/flag FLD
Accuracy	SRM	NIST certified reference solution	5%	80% <R< 120%	Reanalyze &/or recalibrate until criterial met
Completeness		All samples		90%	
Detectability	SDL	System dection limit	Annually	Precision 0.1 ng/L Particulate pg/m^3 Vapor phase 45 pg/m^3	Flag BDL
Blanks	STB LRB	Storage Procedural	10% 10%	<SDL <SDL	Reanalyze/flag FSTB Reanalyze/flag FLRB
Calibration	CLM	Multiple point calibration	Daily	r^2>0.99	Reoptimize instrument. Repeat calibration
	LPC	Performance standard (calibration standards)	Every 6 samples	Calculated value within 10% of true value	Analyze 2nd control and recalibrate if necessary

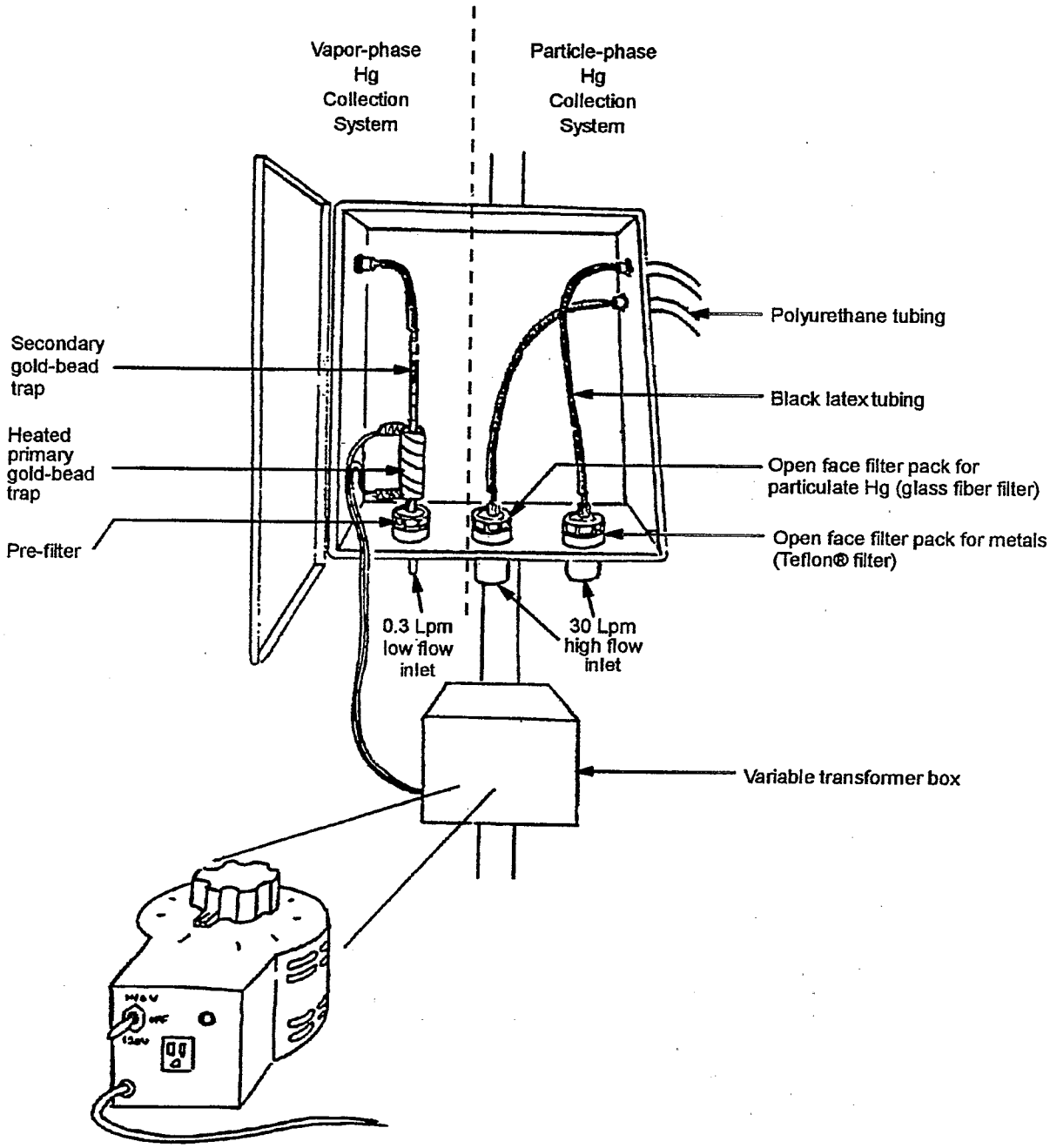

Figure 1. Ambient sampling system for collection of vapor and particle phase mercury.

Sampling Vapor and Particle Phase Mercury in Ambient Air

Project _____

Site _____

Location _____

Date _____

Height above ground _____

Operator _____

	Before	After
Barometric Pressure (mmHg)		
Ambient Temperature (°C)		
Rain (Y/N)		
Relative Humidity (%)		

CARTRIDGE INFORMATION

Vapor-phase System

Primary gold-bead "A" trap I.D. Number _____

Secondary gold-bead "B" trap I.D. Number _____

Heated primary trap temperature (°C) _____

Particle-phase System

Filter pack I.D. Number _____

FIELD DATA INFORMATION

Clock Time (24-hr)	Flow Check (✓)	Vapor-phase System		Particle-phase Sytem		Total Sample Time, minute	Total Sample Volume, L
		Mass Flow Control Setting	Flow Rate (Q_a) (Lpm)	Dry Gas Reading	Flow Rate (Q_a) (Lpm)		

Comments _____

Figure 2. Field test data sheet (FTDS) for sampling vapor and particle phase mercury in ambient air.

☆U.S. GOVERNMENT PRINTING OFFICE: 1997 - 549-001/60151

TABLE 2. ACCELERATOR JET DIAMETERS AND CORRESPONDING REYNOLDS NUMBER (RE) FOR SELECTED FLOW RATES TO OBTAIN 2.5 MM AERODYNAMIC D_{50} SEPARATION

Flow rate, L/min	Jet diameter, mm	Reynolds number (RE)
1.0	1.55	900
2.0	1.97	1,400
5.0	2.65	2,700
10.0	3.33	4,200
12.0	3.55	4,700
15.0	3.85	5,500
16.7	4.00	6,000
20.0	4.25	6,600

TABLE 3. SUMMARY OF KEY PROBE SITING CRITERIA FOR ACID AEROSOL MONITORING STATIONS

Factor	Criteria
Vertical spacing above ground	• Representative of the breathing zone and avoiding effects of obstruction, obstacles, and roadway traffic. *Height of* probe intake above ground in general, 2-3 m above ground and 2-15 m above ground in the case of nearby roadways. • About 1 m or more above the structure where the sampler is located.
Horizontal spacing from obstruction and obstacles	• Minimum horizontal separation from obstructions such as trees is > 20 m from the dripline and 10 m from the dripline when the trees act as an obstruction. • Distance from sampler inlet to an obstacle such as a building must be at least twice the height the obstacle protrudes above the sampler. • If a sampler is located on a roof or other structures, there must be a minimum of 2 m separation from walls, parapets, penthouses, etc. • There must be sufficient separation between the sampler and a furnace or incinerator flue. The separation distance depends on the height and the nature of the emissions involved.
Unrestricted airflow	• Unrestricted airflow must exist in an arc of at least 270 degrees around the sampler, and the predominant wind direction for the monitoring period must be included in the 270 degree arc.
Spacing from roads	• A sufficient separation must exist between the sampler and nearby roadways to avoid the effect of dust re-entrainment and vehicular emissions on the measured air concentrations. • Sampler should be placed at a distance of 5-25 m from the edge of the nearest traffic lane on the roadway depending on the vertical placement of the sampler inlet which could be 2-15 m above ground.

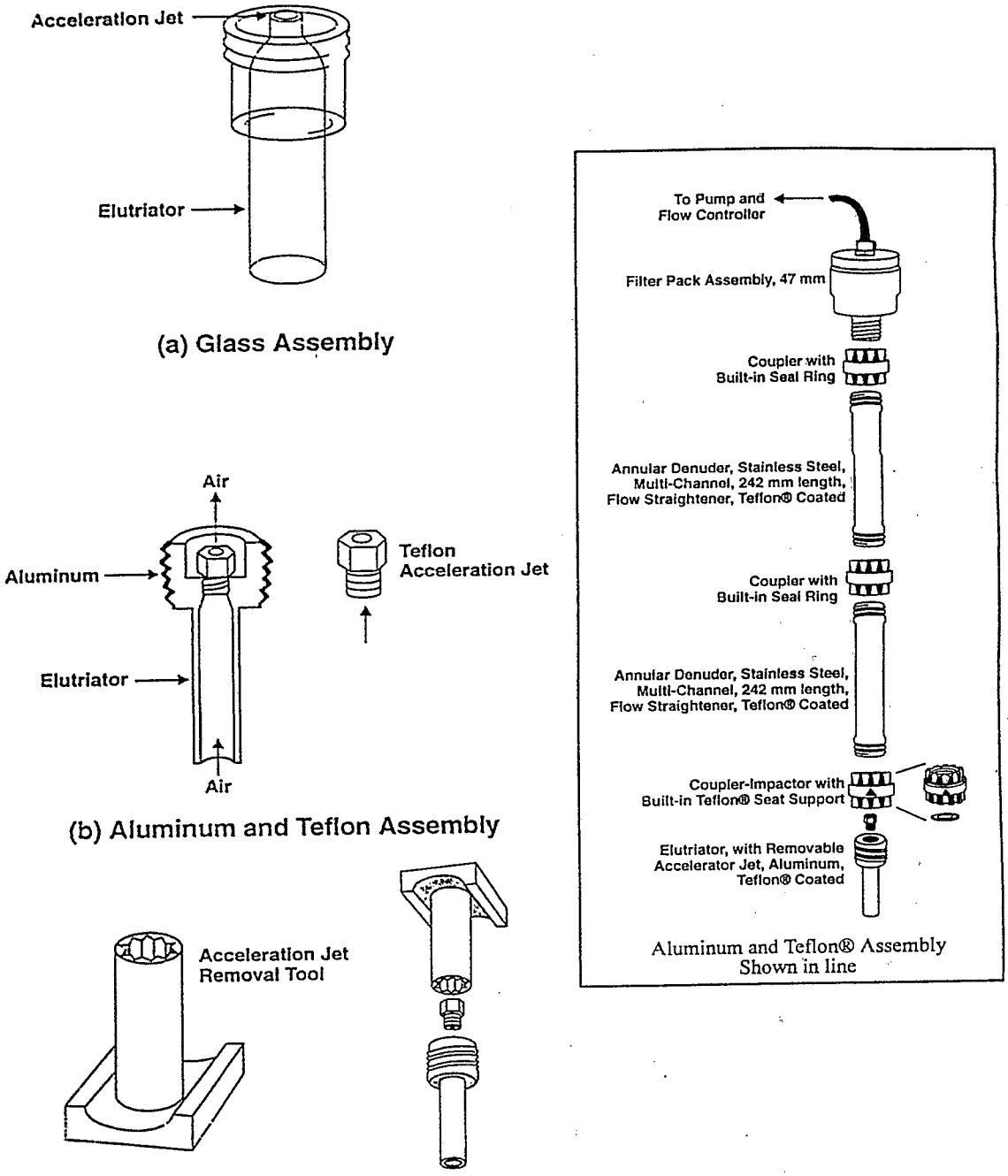

Figure 3. Available elutriator and acceleration jet assemblies.

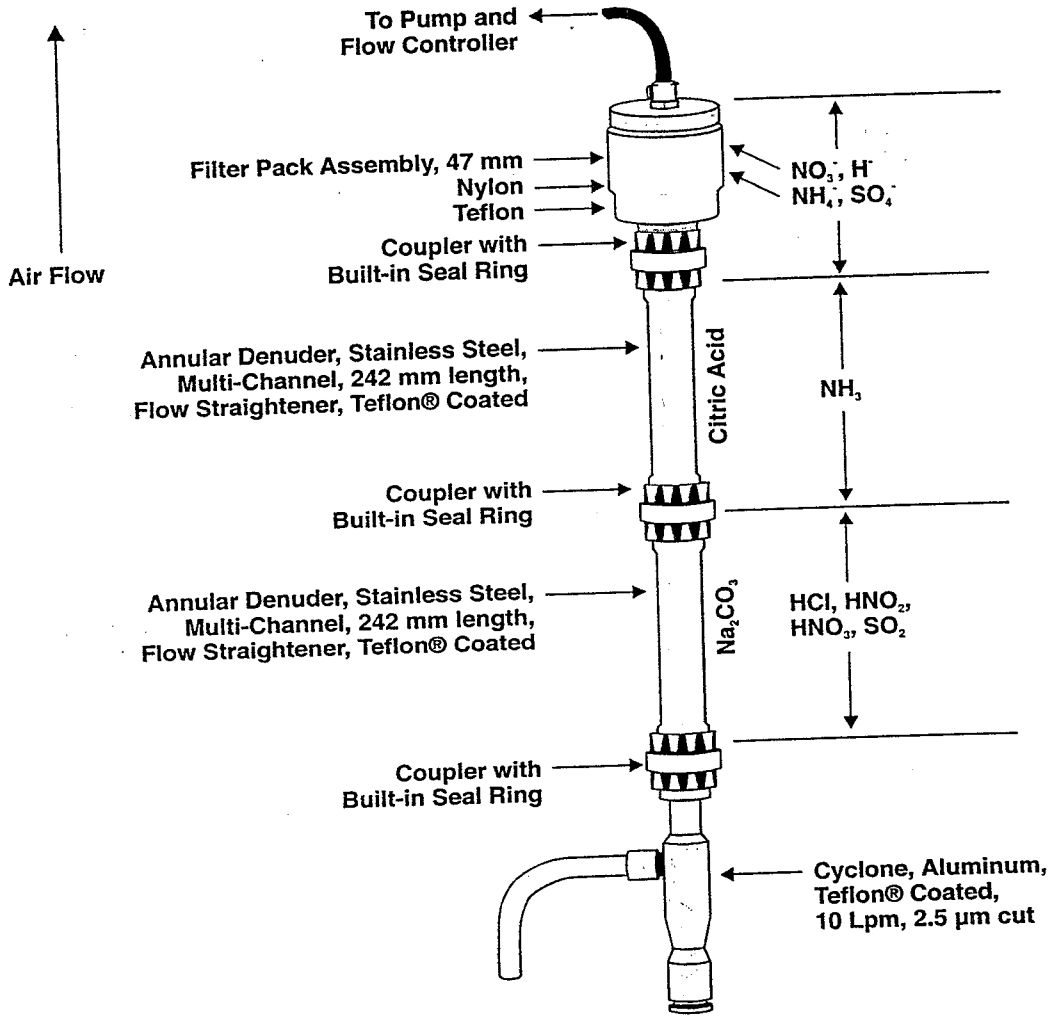

Figure 6. Schematic view of Annular Denuder with cyclone adaptor for removal of coarse particles.

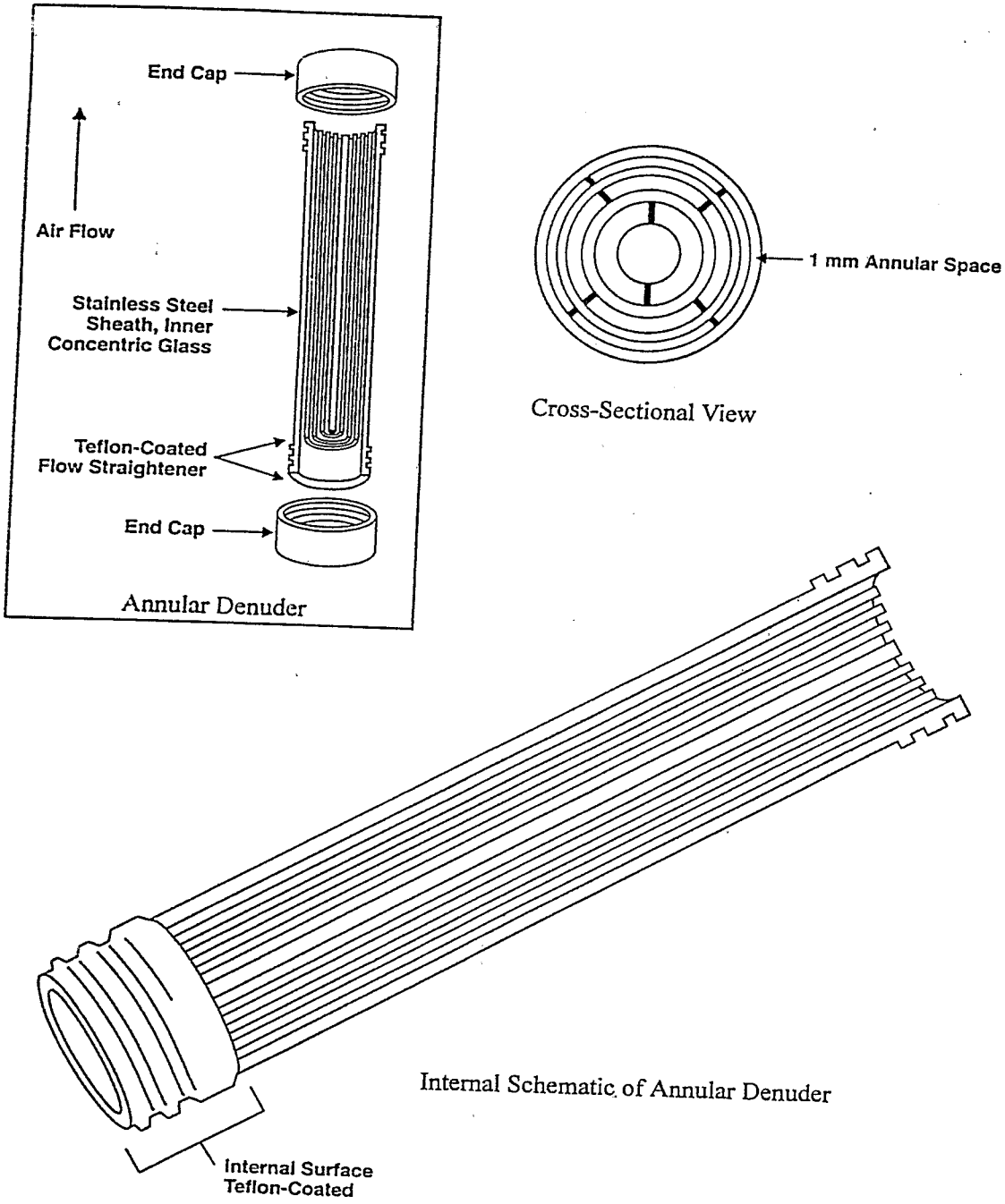

Figure 7. Internal schematic of Annular Denuder.