440176015A

DEVELOPMENT DOCUMENT

for

BEST TECHNOLOGY AVAILABLE

for the

LOCATION, DESIGN, CONSTRUCTION AND
CAPACITY OF COOLING WATER INTAKE STRUCTURES
for
MINIMIZING ADVERSE ENVIRONMENTAL IMPACT

Russell E. Train
Administrator

Andrew W. Breidenbach, Ph.D
Assistant Administrator for
Water and Hazardous Materials

Ernst P. Hall
Acting Director
Effluent Guidelines Division

Devereaux Barnes, P.E.
Project Officer

April, 1976

Effluent Guidelines Division
Office of Water and Hazardous Materials
U.S. Environmental Protection Agency
Washington, D.C. 20460

For sale by the Superintendent of Documents, U.S. Government Printing Office
Washington, D.C. 20402 - Price $3.40

ABSTRACT

This document presents the findings of an extensive study of the available technology for the location, design contruction and capacity of cooling water intake structures for minimizing adverse environmental impact, in compliance with and to implement Section 316(b) of the Federal Water Pollution Control Act Amendments of 1972.

CONTENTS

Section		Page
I	BACKGROUND	1
	Scope	1
	Intake Structure Definition	2
	Cooling Water Use in the United States	3
	Environmental Impacts of Cooling Water Use	5
	Control Strategy for Limiting Impacts on Aquatic Organisms	10
	Acquisition of Biological Data	12
II	LOCATION	15
	Introduction	15
	Water Sources	16
	Intake Location with Respect to Plant Discharge	20
	Intake Location with Respect to the Shoreline	23
	Intake Location with Respect to Water Depth	23
	Intake Location with Respect to the Balance of the Plant	24
	Aquatic Environmental Considerations in Intake Location	24
	General Locational Aspects	26
III	Design	27
	Introduction	27
	Screening Systems Design Considerations	27
	Behavioral Screening Systems	39
	Physical Screening Systems	62
	Fish Handling and Bypass Facilities	103
	Intake Designs	109
	Circulating Water Pumps	142
IV	CONSTRUCTION	145
	Introduction	145
	Displacement of Resident Aquatic Organisms	145
	Turbidity Increases	146
	Disposal of Spoil	147
V	CAPACITY	149
	Introduction	149
	Fishes	150
	Microbiota	152
	Reduction of Cooling Water Intake Volume	153

VI OPERATION AND MAINTENANCE 159

Introduction 159
Operation 159
Maintenance 161

VII COST 163

Introduction 163
Cost of Construction of Conventional Intake Structures 164
Implementation Costs 169
Nonwater Quality Impacts 174

VIII SUMMARY 175

Introduction 175
Adverse Environmental Impacts 175
Available Technology 175
Performance Monitoring 192
Applicability of Intake Structure Technology 193

IX ACKNOWLEDGMENTS 195

X REFERENCES* 201

XI GLOSSARY 209

APPENDIX A - ENTRAINMENT IMPACT ON MICROBIOTA 215

APPENDIX B - EVALUATION APPROACH 221

APPENDIX C - TOPICAL BIBLIOGRAPHY SUPPLIES BY THE NATIONAL MARINE FISHERIES SERVICE 225

*Note: Includes, at the end, a list of documents currently in preparation which may be useful in the case-by-case evaluation of the best available technology for the location, design, contruction and capacity of cooling water intake structures for minimizing adverse environmental impact.

FIGURES

Number	Title	Page
II-1	Intake Location With Respect to Shoreline	17
II-2	Location of Intake and Outfall - Plant No. 5502	21
II-3	Location of Intake and Outfall - Plant No. 0608	22
II-4	Intakes Drawing From Different Water Levels	25
III-1	Loss of Head Through Traveling Water Screens, 0.95 cm (3/8") Opening	29
III-2	Intake Velocity and Flow vs Fish Count	33
III-3	Mean Cruising Speed for Under Yearlings and Yearling Coho Salmon for Four Levels of Acclimation	33
III-4	Effective Screen Area	35
III-5	Undesirable Intake Well Velocity Profiles	37
III-6	Screen Mesh Size Selection (Based on Length of Fish)	40
III-7	Typical Electric Fish Fence	42
III-8	Air Bubble Screen to Divert Fish from Water Intake	45
III-9	Channel to Test Effectiveness of Air Bubble Screen at North Carolina Fish Hatchery	46
III-10	Bubble Screen Installation at Plant No. 3608 to Repel Fish from Water Intake	49
III-11	Louver Diverter - Schematic	52
III-12	Delta Fish Facility Primary Channel System	53
III-13	Test Flume at Plant No. 0618	56
III-14	Intake Structure - Plant No. 0629 to Divert Fish by Louver Screens and Return Them Downstream	57
III-15	Fish Elevator for Fish Bypass - Plant No. 0629	58
III-16	Operation of the Velocity Cap	60

III-17	Conventional Vertical Traveling Screen	64
III-18	Conventional Vertical Traveling Screen	65
III-19	Traveling Water Screen	68
III-20	Inclined Plane Screen with Fish Protection	70
III-21	Fixed (Stationary) Screen (Schematic Only)	73
III-22	Fixed (Stationary) Screens Detail	74
III-22a	Perforated Pipe Screen (in River Channel)	76
III-23	Double Entry, Single Exit Vertical Traveling Screen	78
III-24	Double Entry, Single Exit Vertical Traveling Screen (Schematic Only)	79
III-25	Double Entry, Single Exit Vertical Traveling Screen, Open Water Setting	80
III-26	Single Entrance, Double Exit Vertical Traveling Screen	83
III-27	Single Entry, Double Exit Vertical Traveling Screen	84
III-28	Horizontal Traveling Screen (Schematic Only)	85
III-29	Mark VII Horizontal Traveling Screen (Schematic Only)	87
III-30	Schematic Plan Adaptation of Horizontal Traveling Screen	89
III-31	Revolving Drum Screen-Vertical Axis Schematic	91
III-32	Vertical Axis Revolving Drum Screen	92
III-33	Revolving Drum Screen - Horizontal Axis	94
III-34	Fish Bypass Structure	96
III-35	Single Entry Cup Screen	98
III-36	Double Entry Cup Screen	99
III-37	Screen Structure With Double Entry Cup Screening	100

III-38	Double Entry Drum Screen Open Water Setting	101
III-39	Rotating Disc Screen	102
III-40	Fish Basket Collection System	105
III-41	Modified Vertical Traveling Screen	108
III-42	Shoreline Pump and Screen Structure	111
III-43	Conventional Pump and Screen Structure	112
III-44	Pump and Screen Structure with Skimmer Wall	113
III-45	Pump and Screen Structure with Offshore Inlet	114
III-46	Profile Through Water Intake - Siphon Type	115
III-47	Approach Channel Intake	116
III-48	Screen Location - Channel Intake	118
III-49	Shoreline Intake	119
III-50	Flush Mounted Screens - Modified and Conventional Screen Settings	121
III-51	Pump and Screen Structure	122
III-52	Pump and Screen Structure	123
III-53	Pier Design Considerations	124
III-54	Screen Area Velocity Distribution	126
III-55	Factors Contributing to Poor Flow Distribution	127
III-56	Pump/Screen Relationships	128
III-57	Pump and Screen Structure for Low Intake Velocities	130
III-58	Effect of Pump Runout	131
III-59	Pump and Screen Structure with Ice Control Feature	133
III-60	Infiltration Bed Intake - Plant No. 4222	135

III-61	Infiltration Bed Intake - Plant No. 5309	136
III-62	Perforated Pipe Intake	138
III-63	Radial Well Intake	140
III-64	Angled Conventional Traveling Screens	141
V-1	Fish Count vs. Intake Flow Volume (Capacity)	154
V-2	Cooling Water Requirements for Fossil and Nuclear Powerplants	155
VII-1	Cost of Intake Systems	166
VII-2	Design of Modified Conventional Intake	171
VII-3	Design of Conventional Intake Modified by Recommendations	172

TABLES

Number	Title	Page
I-1	Intake of Cooling Water by Broad Categories of Industry	4
I-2	Reports and Predictions of Screen Kills of Estuarine Species	7
I-3	Reports and Predictions of Inner Plant Kills of Estuarine Species	9
III-1	Fish Maximum Swimming Speeds	31
III-2	Traveling Water Screen Efficiencies	38
III-3	Electric Screen Applications - Summary of Design Data	43
VII-1	Cost of Traveling Water Screens	165
VII-2	Cost of Shoreline Intakes	168
VII-3	Cost Analysis - Implementation of Example Design Requirements	173

SECTION I

BACKGROUND

Scope

The Federal Water Pollution Control Act Amendents of 1972 state under "Thermal Discharges," Section 316(b): Any standard established pursuant to section 301 or section 306 of this Act and applicable to a point source shall require that the location, design, construction and capacity of cooling water intake structures reflect the best technology available for minimizing adverse environmental impact.

Section 306 of the Act requires that effluent standards be promulgated for point sources in the following categories, as a minimum:

- pulp and paper mills;
- paperboard, builders papar and board mills;
- meat product and rendering processing;
- dairy product processing;
- grain mills;
- canned and preserved fruits and vegetables processing;
- canned and preserved seafood processing;
- sugar processing;
- textile mills;
- cement manufacturing;
- feedlots;
- electroplating;
- organic chemicals manufacturing;
- inorganic chemicals manufacturing;
- plastic and synthetic materials manufacturing;
- soap and detergent manufacturing;
- fertilizer manufacturing;
- petroleum refining;
- iron and steel manufacturing;
- nonferrous metals manufacturing;
- phosphate manufacturing;
- steam electric powerplants;
- ferroalloy manufacturing;
- leather tanning and finishing;
- glass and asbestos manufacturing;
- rubber processing; and
- timber products processing.

The requirements of section 316(b) are in contrast to those of sections 301 and 306, which call for the uniform

achievement of effluent limitations based on the application of defined levels of technology.

In addition to the above, operation and maintenance of cooling water intake structures are important factors which should be considered in addition to those itemized in section 316(b) of the Act. Consequently, this report has been divided into corresponding sections for location, design, construction, capacity, and operation and maintenance.

Since the Act specifies cooling water intake structures, this document is addressed specifically to cooling water intakes. It is evident, however, that the general technical discussion could apply to other water intakes; for example, non-cooling water intakes for industrial, irrigation or domestic water supply. A major feature of a powerplant cooling water intake, as distinguished from many others, is the necessity for essentially continuous operation. Such a requirement imposes many design criteria that may not be necessary for other types of intakes. Powerplant intakes cannot normally be shut down to bypass temporary fish runs, to clean out silt or to lessen some other seasonal environmental impact. However, shutdowns may be feasible in some instances as with a nuclear powerplant scheduling refueling to coincide with major aquatic biological events such as predictable critical fish spawning periods, or seasonal concentrations or migrations of organisms.

One of the goals of Federal Water Pollution Control Act Amendments of 1972 is to attain water quality which provides for the protection and propagation of fish, shellfish, and wildlife. As this goal of upgrading the surface water quality is achieved, areas currently inhospitable to aquatic life may be restored. This potential increase in water quality and resultant changes in aquatic life concentration should be considered in meeting the requirements of section 316(b).

Intake Structure Definition

A cooling water intake structure comprises the total structure used to direct cooling water from a water body into the components of the cooling system wherein the cooling function is designed to take place, provided that the intended use of the major portion of the water so directed is to absorb waste heat rejected from the process or processes employed or from auxilliary operations on its premises, including air conditioning. As defined above, the intake structure includes circulating and service water

pumps where those pumps are located in the cooling system prior to the heat exchangers or condensers.

Cooling water intakes for industrial point sources fall into three general categories according to the use for which the water is withdrawn.

Circulating Water Intakes - These intakes are for once-through cooling systems, which are designed to continuously withdraw the entire circulating water flow. The water is passed through the condenser and subsequently to a point of discharge. The typical water usage for which the intake for powerplants must be designed ranges from about 0.03 to 0.1 cu m/s (500 to 1500 gpm) per Mw.

Makeup Water Intakes - These intakes provide the water to replace that lost by evaporation, blowdown and drift from closed cooling systems. The quantity of water required is commonly 3 to 5% of the circulating water flow. These intakes are therefore considerably smaller than the cooling water intakes for once-through systems. Although makeup quantities are comparatively low, they may be significant in some cases on an absolute basis.

Service Intakes - These intakes provide the water required for essential general cooling systems. Here, the water quantity is small when compared to the circulating water flow, averaging about 0.002 cu m/s (30 gpm) per Mw of powerplant capacity. The special needs of nuclear powerplants dictate that the intake be quite massive due to the requirements for redundancy of pumping and screening equipment and the need for both missile and earthquake protection.

Often service water systems and circulating water systems will be contained in separate bays at the same intake. Most new intakes will have this design. Older powerplants, built in a series of steps, may have separate intakes for different functions and may use more than one water source.

Cooling Water Use in the United States

Water withdrawal for cooling by industrial point sources now amounts to approximately 70 trillion gallons per year. Steam electric powerplants withdraw approximately 80% of this, or 60 trillion gallons per year which is roughly 15% of the total flow of waters in U.S. rivers and streams. The intake of cooling water by broad categories of industry is given in Table I-1. The relative potential significance of average intake cooling water volumes for establishments

Table I-1

INTAKE OF COOLING WATER BY BROAD CATEGORIES OF INDUSTRY
(Year 1967)

Category	Intake Volume, billion gal/yr	Number of Establishments	Average Intake billion gal/yr/estab.
Steam Electric Powerplants	40,000	1,000	40
Petroleum Refineries	1,230	260	4.7
Primary Metals Mfg.	3,630	840	4.3
Chemical Plants	3,530	1,130	3.2
Pulp and Paper Mills	650	620	1.1
Rubber Mfg.	96	300	0.3
Wood Products Mfg.	52	190	0.3
Food Products Mfg.	430	2,350	0.2
Stone, Clay and Glass Mfg.	140	590	0.2
Textile Mills	24	680	0.04
Leather Mfg.	1	90	0.01

within the broad categories is shown in the table. However, the maximum cooling water volumes for individual establishments will be dependent on factors such as products, processes employed, size of plant, degree of recirculation employed in the cooling water system, etc.

Environmental Impacts of Cooling Water Use

The major impacts related to cooling water use are those affecting the aquatic ecosystem. Serious concerns are with population effects that reduce harvestable cooling water intake structures may interfere with the maintenance or establishment of optimum yields to sport or commercial fish and shellfish, decrease populations of endangered organisms, and seriously disrupt sensitive ecosystems.

The aquatic organisms comprising the aquatic ecosystem may be defined in broad terms as follows:

Benthos - Bottom dwellers are generally small and sessile (non-swimming) but can include certain large motile species (able to swim). Location of major populations can be reasonably well defined and therefore avoided by adoption of appropriate location. These species can be important food chain members.

Plankton - Free floating microscopic plants and animals including fish eggs and larval stages with limited ability to swim. The location of these species generally are apt to be rather diffuse throughout the water body and therefore the adoption of locational measures would not protect these species. However, vertical movement cf some species can occur leading to the aggregation of many plankton into layers. Locational measures, such as withdrawal of water from hypolimnetic waters, may serve to protect vulnerable plankton layers. Plankton are also important food chain organisms.

Nekton - Free swimming organisms (fish). Of major concern in many cases are egg and larval stages which are small and have limited mobility and therefore generally considered as plankton. Juvenile fishes may be screenable. Juvenile fishes may lack swimming or behavioral ability to avoid the intake. At least in relatively warm waters, adult fish of most species "generally" will have the swimming ability to avoid the intake provided they are stimulated to do so. The location of spawning and nursery areas and migration paths are frequently definable and therefore should be reflected in locational measures.

One of the first steps that should be taken in determining the best technology available for a cooling water intake structure to minimize adverse environmental impact is the designation of the critical aquatic organisms to be protected. This approach has been outlined by the U.S. Atomic Energy Commission in Reference 24. This approach requires the determination of the identity and spatial and temporal distribution of organisms in the area of the intake. A judgement may then be made as to which of the organisms are critical aquatic organisms as defined in the Glossary to this document. The characteristics of these organisms and the nature of the water body should determine the environmental design of the intake structure. The control strategy for minimizing environmental impact may be different for planktonic species than for nektonic species as discussed below.

Damage to aquatic organisms occurs by either entrapping or impinging larger organisms against the outer parts of the cooling water intake structure or by entraining small organisms in the cooling water as it is pumped through the innner plant.

Entrapment (often called impingement) of nektonic species can be caused by hydraulic forces in the intake stream prior to its flow through screens, etc. In general, entrapment will be lethal for most species due to starvation and exhaustion in the screen well, asphyxiation when forced against a screen by velocity forces which prevent proper gill movement, descaling by screen wash sprays and by asphyxiation due to removal from water for prolonged periods of time. Table I-2 taken from Reference 35 presents some reports and predictions of screen kills of estuarine species.

Inner-plant or entrainment damage to organisms may result from the passage of relatively small benthic, planktonic and nektonic forms through the condenser cooling system. Mortality of these organisms can occur from one or more of the following causes:

- physical impact in the pump and condenser tubing

- pressure changes caused by diversion of the cooling water into the plant or by the hydraulic effects of the condensers

- thermal shock in the condenser and discharge tunnel

TABLE I-2

Reports and predicitions of screen kills of estuarine species, [35]

Power Plant	Impingement Event	Period	Comments
Millstone, Niantic Bay Conn.	Massive kill of small menhaden (more than 2.0 million), screens clogged.	1971	Occurring late summer, early fall; plant shut down on 8/21/71; persistent low kill of 10 other species.
P.H. Robinson, Galveston Bay, Tex.	7,191,785 fish impinged in one year.	1969-70	Projected from sampling of operating plant; principal species were menhaden, anchovy, croaker; highest in March.
Indian Point, No. 1 Hudson River, N.Y.	Yearly kill of 1.0 to 1.5 million fish.	1965-72	Primarily white perch with 4-10% striped bass.
	Kill of 1.3 million in 9 1/2 weeks	1969-70	10% striped bass; plant closed Feb. 8.
Indian Point, No. 2	Massive kills; maximum per day 120,000.	Jan. 71	Testing cooling system of new plant (no heat); white perch & other species.
	175,000 fish killed in 5 days.	Feb. 72	Testing again (no heat) Con. Ed. fined $1.6 million by N.Y. for kills.
Indian Point, No. 1,2	Predicted total kill 6.5 million fish per year.		With both plants in full operation
Port Jefferson Long Island, N.Y.	2 truckloads (at least) of fish killed on screens in 3 days.	Jan. 26-28 1966	Mostly small menhaden; also white perch.
Crystal River (near) Cedar Key, Fla.	Predicted annual kill of 400,000 fish and 100,000 shellfish.	1969	Based upon operation of 3 units (2 units now destroy 1/2 this amount).
Brayton Point Mt. Hope Bay, Mass.	350,000 fish impinged in one year; mostly menhaden.	1971-72	Heaviest from Nov-March; flounder, silverside, & others also impinged.
Oyster Creek, Barnegat Bay, N.J.	10,000 fish, 5,000 crabs, destroyed per month in spring and summer.	1971	Estimated from 19 days of sampling; screen kill in cold season unknown.
Surry Power Station James River, Va.	6 million river herring destroyed in 2-3 months	Oct.-Dec. 1972	Estimated by AEC from screen samplings during partial power runs.

- chemical toxemia induced by antifouling agents such as chlorine

Table I-3 taken from Reference 35 presents some reports and predictions of inner plant kills of estuarine species. Reference 39 summarizes the available data on relative mortality of entrainable marine organisms due to passage through powerplant cooling systems.

Damage to aquatic organisms may result from damage to the aquatic habitat, examples of which are given below:

1. Natural temperature regimes and distribution patterns of a water body could be disrupted by circulation of large volumes during withdrawal of cooling water.

2. Freshwater inflow to estuaries may be diminished by withdrawals for powerplant cooling which are subsequently discharged to the open ocean or another drainage system. The reverse may occur when saline waters are taken into the plant and discharged into freshwater zones.

3. Normal salinity distributions within estuarine areas may be altered by currents and mixing resulting from cooling water pumping with resultant damage to key habitat for organisms.

4. Clean water areas may be contaminated by introduction or redistribution of polluted water withdrawn from another area. This particular problem can be severe if an intake is located in an area with low biological populations, if the low populations are the result of water pollution. Seemingly, logical placement of the intake there because of few organisms would result in withdrawal of much polluted water which could damage areas of clean habitat.

5. Intake or discharge structures, including dikes or dredged channels, may prevent a normal circulation of water or bar migration of organisms.

6. Discharge plumes may interfere with sediment transport along the shore and affect the deposition of sand and sediments in the discharge or nearby area, resulting in shore erosion of some degree of beach starvation.

Table I-3

Reports and predictions of inner plant kills of estuarine species 35

POWER PLANT	EVENT	DATE	COMMENT
Brayton Point, Mt. Hope Bay, Mass.	7.0 to 165.5 million menhaden (some river herring) killed per day	Summer, 1971	Estimated from EPA's sampling techniques. 164.5 million kill on July 2; fish mangled.
	50 million fish killed in 11 days	August 10-21, 1971	Estimated from net tons at discharge; menhaden and blueback herring; tests showed all fish died.
Millstone, Niantic Bay, Conn.	36 million fish killed in 16 days (probably menhaden and blueback herring)	Nov. 2-18, 1971	Estimated by sampling of vertebrae of dead fish in discharge channel.
	2.5 million flounder entrained	Apr.-June, 1972	Death rate not estimated.
Connecticut Yankee, Conn. River, Conn	179 million fish larvae killed per year	1969&1970	Estimated by B. Marcy.
Indian Point, Hudson Estuary, N.Y.	Predicted 7.3 million striped bass killed per year, larvae and juveniles	Future	For Units 1&2; estimated from estuary sampling in 1966 and 1967.
Seabrook, Hampton-Seabrook Estuary, N.H.	Predicted kill of 74 million clam larvae per day	Future	Estimate for proposed plant; 74 million is initial kill at plant startup, lower rate after equilibrium reached.

Other Environmental Impacts

Aesthetic Impact - Where the intake structure and balance of plant are separated by great distances the intake structure itself may have an imposing physical presence. This may be significant in wilderness areas and in natural and historical preserves. Where plant and intake are located close together overall architectural treatment can be applied to create an appearance that is less of an environmental concern.

Noise Impact - The sound level of the large circulating pumps can be quite high. Current practice in milder climates is to construct these installations without enclosures. Enclosed intakes normally would not have significant external sound levels.

Wetlands Disruption - Wetlands are especially vulnerable to impacts from shoreland construction, such as loss of wetland and bay bottom habitat, degradation of wetlands through alteration of hydrologic regime, and loss of water quality from agitation of soils[35].

Control Strategy for Limiting Impacts on Aquatic Organisms

As indicated above, the control stategy of the best technology available for minimizing environmental impacts will vary with the type of organism considered. Impingement effects can be significantly influenced by the location, design and capacity of intake structures. This is because the spatial and temporal distribution of nektonic species can be reasonably well defined by biologic examination, and sensitive areas avoided by proper location of the intake. In addition, the characteristics of some adult nektonic species are sufficient to allow their impingement on fine mesh screens provided an effective recovery system is employed. Inner-plant effects on the other hand are less controllable by the design of intake structures than by the factors of location and capacity. This is because the species are small and generally lack significant mobility. The spatial and temporal distribution of these species is more difficult to define, which will limit the effectiveness of locational guidelines. However, in stratified lakes, the quantity of such organisms entrained by the intake systems may be reduced by use of hypolimnium waters. Design strategies will also be generally ineffective to protect these species since their small size will prevent them from being effectively screened even on a fine mesh screen.

After considering location, another method to control entrainment effects where benthic and planktonic organisms are identified as important organisms to be protected would be to limit the capacity (volume of cooling water withdrawn from a source) to a small percentage of the makeup water to that source. Peterson [16] has estimated the thermal capacity of some of the Nation's larger waterways. This work could be expanded to establish relationships between intake capacity (volume), stream flow and aquatic organisms. Where existing stations exceed the recommended volume to protect aquatic organisms, steps could be taken to reduce the intake volume. Implicit in this approach is the assumption that the impact of entrainment effects on a waterbody is directly related to the volume of intake flow, i.e., the lower the flow, the lower will be the damage to planktonic and benthic species. This assumption should be evaluated for each intake structure rather than considered an ubiquitous assumption.

Another approach, outside the scope of this document, would be to design the remainder of the cooling water system to minimize the effect on entrained organisms. This approach involves limiting the temperature, pressure, chemicals added, and time of exposure of the aquatic species to levels that will insure satisfactory survival of important organisms. A considerable amount of research has been done on the subject of survival of entrained organisms after passage through condenser cooling water systems. The results of these studies are often conflicting. The National Academy of Engineering,[34] recommended that the condenser system be designed according to the following formula:

$$t\ (T) \leq 2000$$

t = exposure time (seconds) at elevated temperature

T = temperature rise (°C) across the condenser

This formula implies that higher temperature rises could be tolerated by most species if the exposure time were kept to a minimum. It is believed that the experimental data upon which this formula is based were limited and therefore caution is suggested in the application of this formula.

It is noted that this approach is directed at the remainder of the condenser cooling system and is not applicable to intake structures.

Reference 34, prepared by the National Academy of Engineering, Committee on Power Plant Siting, also tabulates for various characteristics (temperature, pressure, turbulence, light intensity changes, mechanical, volume, density, circulation, salinity, chemical, biological, etc.) the short-term and long-term alternatives for the siting and design of powerplants corresponding to aquatic systems in general and for oceanic, esturarine, riverine, lake and reservoir zones.

Acquisition of Biological Data

Probably the most widely ignored aspect of data collection for intake structure design is the biological data on the critical aquatic organisms to be protected. Most of the data collected for intake structure design concerns the hydrological information relative to the water source. This information consists of data on water currents, sedimentation, water surface elevations and water quality. In general, relatively little data on the biological organisms is collected. The design of intakes should be based on protection of the critical aquatic or other organisms as well as the traditional design considerations of adequate flows, temperatures and debris removal. In addition, it has been noted that the design criteria for the protection of the environment will be significantly different for different species. It is therefore necessary that in each case sufficient data be made available on the biological community to be protected, including predictive studies where needed.

The data that should be provided depends upon the severity of the problem. For plants withdrawing water from sensitive water bodies the minimum data should consist of the following:

- The identification of the major aquatic or other species in the water source. This should include estimates of population densities for each species identified, preferably over several generations or seasons of the population to account for expectable seasonal variations.

- The temporal and spatial distribution of the identified species with particular emphasis on the location of spawning grounds, migratory passageway, nursery area, shellfish beds, etc.

- Data on source water temperatures for the full year.

- Documentation of fish swimming capabilities for the species identified over the temperature ranges anticipated and under test conditions that simulate as closely as possible the conditions at the intake.

- Location of the intake with respect to the seasonal and diurnal spatial distribution of the identified aquatic species.

The criteria for the biological survey for the development of this data are not presented here. There are several excellent publications on the techniques to be used in conducting biological surveys. These techniques are given in cites (a), (c), (d), (e), and (f), page 11 of the 316(a) guidance document. The EPA also plans to publish guidelines for the conduct of biological surveys under section 316(b). The techniques will differ both with the type of organism and the source of water.

As noted above, the type and extent of the biological data required in each case will be determined by the actual or anticipated severity of the adverse environmental impact. Since adverse environmental impacts will vary from case to case, it is not expected that each case will require the same detail of information.

SECTION II

LOCATION

Introduction

This section is concerned primarily with intake location, although it will become evident that intake location is closely associated with the other factors.

"Intake structure" as previously defined, means the entire intake facility which may consist of one or more elements including an inlet structure (the point of water entrance), closed conduits and open channels, a pump structure or a combined screen and pump structure. "Location" refers to both the horizontal and vertical placement of the intake structure with respect to the local above-water and underwater topography. This section attempts to answer such questions as: where is the intake to be located with respect to the shoreline, navigation channels, wetlands, discharge structures, and areas of important biological activity? Also, from what depths is the water to be drawn?

The discussion is concerned with three locational aspects of the intake's relation to the environment:

- The operation of the intake insofar as its location affects operational characteristics.
- Construction activities such as dredging, excavation and backfill for channels, inlet conduits, inlet structures, and pump and screen structures. The environmental influence may be considerable, but it should be temporary if suitably controlled.
- Aesthetics, the appearance of the intake facility and its relationship to the surroundings. Both the design and the location of one or more elements of the intake facility may be dictated in part by aesthetic considerations.

The most important locational factor influencing the intake design is the nature of the water source from which the supply is taken.

Other locational factors which must be considered are the location of the intake structure with respect to the

discharge structure, the vertical location of the intake, the location of the intake with respect to the balance of the plant and the avoidance of areas of important biological activity. Depending on the nature of the water body and sensitivity of the biofa, the intake may be located off-shore, flush with the shoreline or inland with an approach channel as shown in Figure II-1. The reasons for selection of a particular orientation with respect to the shoreline are both to provide the required volume of cooling water and to minimize withdrawal from biologically sensitive areas.

Water Sources

Fresh Water Rivers

Rivers normally are characterized by unidirectional flow, which eases the intake design problem. Most large rivers will generally possess sufficient resistance to recirculation due to the velocity gradient to permit the siting of both intake and discharge at the shoreline. Recirculation might present a problem at extremely low river flows. The base of the river intake is generally set at the lowest river bed elevation, however, it should be set above significant silt accumulations to prevent silt deposition in the intake. Different locations in streams have different susceptibilities to silting. The inner sides of river bends are more susceptible to silting than the outer sides. The top of the intake is usually set for high flow and flood conditions. The pump operating deck is usually placed several feet above the flood crest level. Large water level and flow variations can make river intake structures correspondingly elevated above normal water levels.

Ice flows and debris loading are also significant for many river locations as are the maintenance of navigation passages. Rivers will usually possess minimum temperature stratification compared to lakes because of greater vertical and horizontal mixing.

Diversion structures at the shoreline can employ the currents of the river to carry fish downstream and thus avoid entrapment at the intake. However, such structures could trap upstream migrants, leading them to the intake.

Small Fresh Water Lakes and Reservoirs

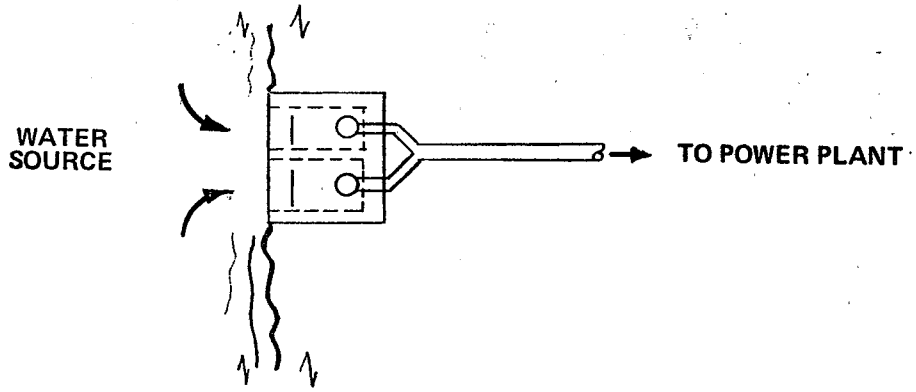

INLET FLUSH WITH SHORELINE

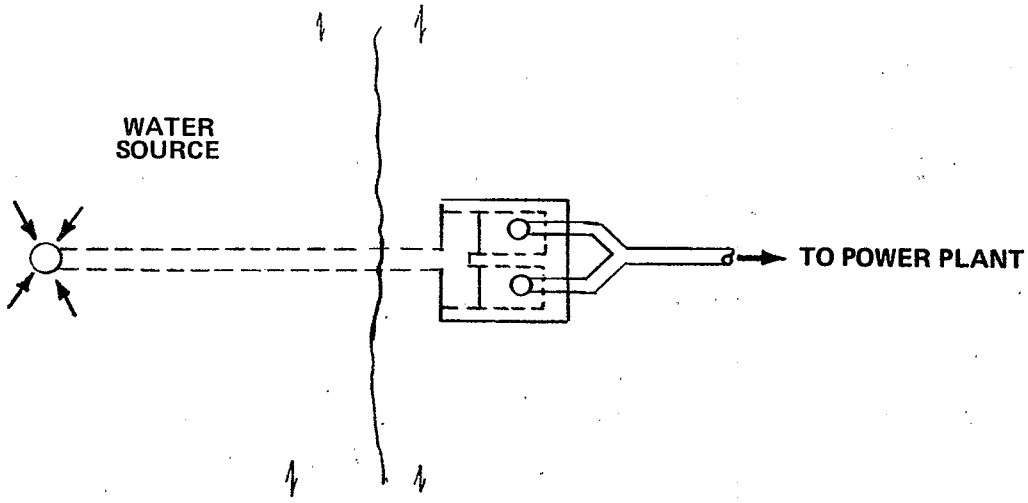

OFFSHORE INLET

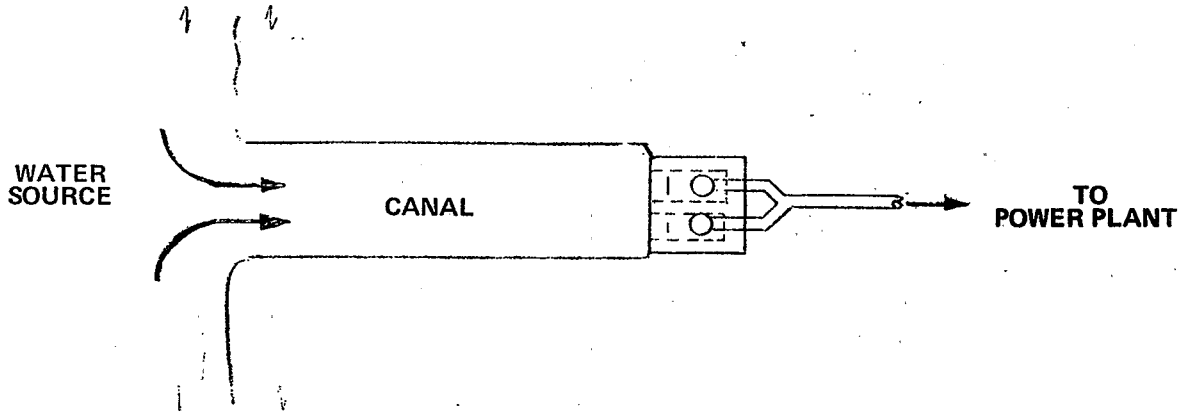

OPEN CANAL TO INLET

FIGURE II-1 INTAKE LOCATION WITH RESPECT TO SHORELINE

The most significant difference between lakes and rivers, apart from velocity structure, is the fact that the former are often stratified with respect to temperature. The thermal stratification of lakes is a complex phenomenon. The heat balance of a lake depends on ambient air temperature, wind speeds, the topography of the lake bottom and flows into and out of the lake. It is clear that a large withdrawal or discharge of cooling water can significantly affect thermal stratification. The zone of cold water at the bottom of the lake is called the hypolimnion. The water in the hypolimnion is relatively low in dissolved oxygen and often high in nutrients (nitrates, phosphates).

Hypolimnetic waters may have a lower pH than the epilimnion waters, and on some occasions may accumulate significant amounts of materials capable of causing fish kills if pumped to the surface where the fish are located.

Lying above the hypolimnion of a stratified lake is a zone of distinctly warmer water, the epilimnion. The significant features of this zone are that it is the area from which evaporation takes place; it is the region into and out of which the natural stream courses flow; it washes the shoreline or littoral zone which is a region of highly abundant life and it supports considerable populations of life throughout its extent. The water in the epilimnion is usually high in dissolved oxygen. Artificial reservoirs may have poorly defined littoral zones because of drawdown procedures. Under some conditions this may not be true. Additional information regarding the productivity of littoral zones of reservoirs may be obtained from the U.S. Fish and Wildlife Reservoir Research Center, at Fayetteville, Arkansas. While the littoral zone of a reservoir may be attractive for an intake location because it does not support as much life, it is of little use to the intake designer who will find a shoreline intake too often high and dry.

Within the epilimnion is the uppermost zone which is called the photic zone. The productivity of this zone is a function of the degree of penetration of sunlight and the presence of necessary nutrients. As little water as possible should be taken from the epilimnion and the absolute minimum from the photic zone. Off-shore intakes with multiple entrance ports appear to have great application in stratified lakes.

Lakes generally do not have the pronounced flushing currents that many rivers have. Therefore, the possibility of re-

circulation becomes more significant. In addition, there is no assistance by current flushing to wash debris and fish past the intake.

Wind forces provide most of the water level variation, and wave protection is an important design consideration in intake structures for lakes. Commercial navigation is generally not as important a factor as in rivers, since shoreline and dams prevent access to most lakes. However, recreational use is more prevalent on lakes than in many rivers.

Estuaries

A number of factors combine to make intake design and location selection for estuaries the most difficult of all water source types. Flow is two directional which complicates the design of many screening systems. Similar to lakes, most estuaries exhibit stratification, although stratification in estuaries is generally less stable than in lakes. Water density depends on both water temperature and salinity. Volumetric fluctuations are greater due to the periodic influx of sea water. The salt content varies with tidal cycles. Estuaries are often stratified with respect to salt content, with fresh water tending to ride above the salt. In areas where cooling water discharge effects are present, density stratification in potential intake areas is further complicated by the differing buoyancies of warm and cool water, and fresh and salt water.

Estuaries are major spawning areas for both ocean fish and shellfish, with wide seasonal variations of biologic activity. The presence of current reversals can create severe recirculation problems. Because of the high salt content and tidal variations which create periods of high and low water, corrosion becomes much more significant in intakes designed for estuaries.

Oceans and Large Lakes

An important consideration in the design of intakes on oceans and large lakes is the storm wave protection system. Wave damping upstream of the screens is required. There may be heavy sediment load in the surf area. Other factors to be considered are littoral drift and shoreline instability. The littoral zone is highly productive biologically, although generally not as productive as are estuaries.

Thermal stratification exists but is not as stable as that in small lakes because of the higher degree of vertical

turbulence. Major migration routes and spawning sites for pelagic species and shellfish areas should be identified and avoided in locating cooling water intake structures. Navigation passageways should also be considered.

Intake Location with Respect to Plant Discharge

From the point of view of plant cooling water efficiency requirements the use of the coolest available water is desirable. Accordingly, considerable attention normally has been given to avoiding the inadvertent recirculation of warm water discharge back into the intake. From a fish attraction standpoint, the avoidance of recirculation is also advantageous. Long experience has shown that many species of fish tend to congregate in warm water areas, especially in the cooler seasons of the year. In at least one major nuclear plant, a small amount of recirculation attracted fish to the intake area in winter. The fish thus attracted were also lethargic due to the low winter temperatures of the water and tended to be carried into the screens.

The technical aspect of the avoidance of recirculation is a subject beyond the scope of this study. The subject would involve an analysis of the existing water currents, the stratification of the warm water and the dilution and dispersion characteristics of the discharge structure.

There are a number of ways in which recirculation can be avoided. Two of these are shown in Figures II-2 and II-3. Figure II-2 shows the location of two intakes and discharges at plant no. 5502. The method used at this plant to prevent recirculation is to locate the intake a considerable distance off-shore and locate the discharge at the shoreline. Figure II-3 shows the location of the intake and outfall for a hypothetical plant. This plant avoids recirculation by withdrawing water from one body of water and discharging to another body of water. This type of separate discharge may have other environmental impacts due to differences in constituents or transfer of organisms from one habitat to another. Other ways of avoiding recirculation are to separate intake and outfall by a sufficient distance, the construction of a physical barrier between the intake and outfall, and the excavation of a channel for the intake or outfall or both. Prevention of recirculation also requires adequate vertical separation of intake and discharge. This is important in a stratified water body such as a lake. Vertical separations of between 20 to 60 feet have been used at some locations. Isolating

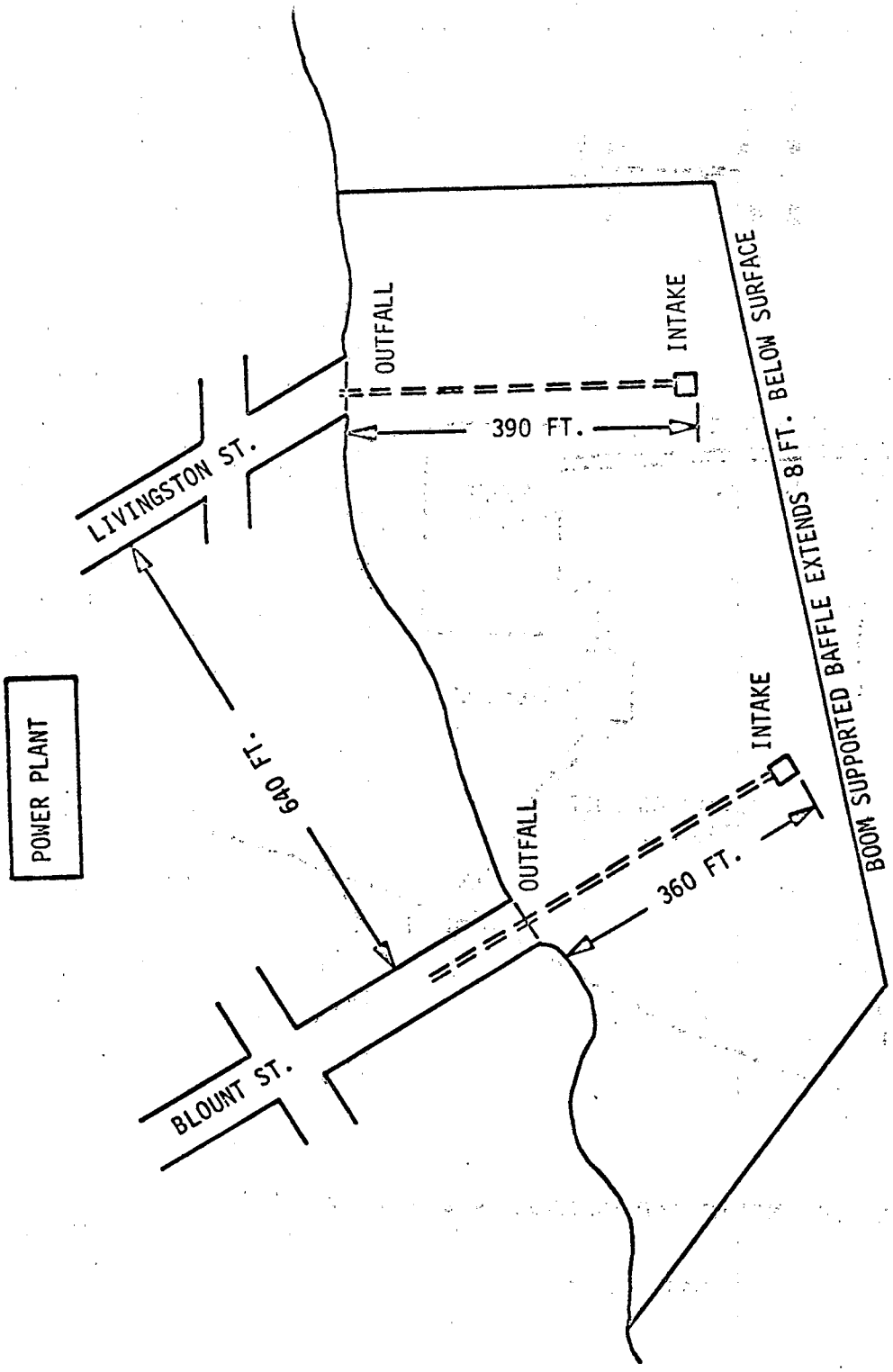

LOCATION OF INTAKE AND OUTFALL - PLANT NO. 5502

FIGURE II-2

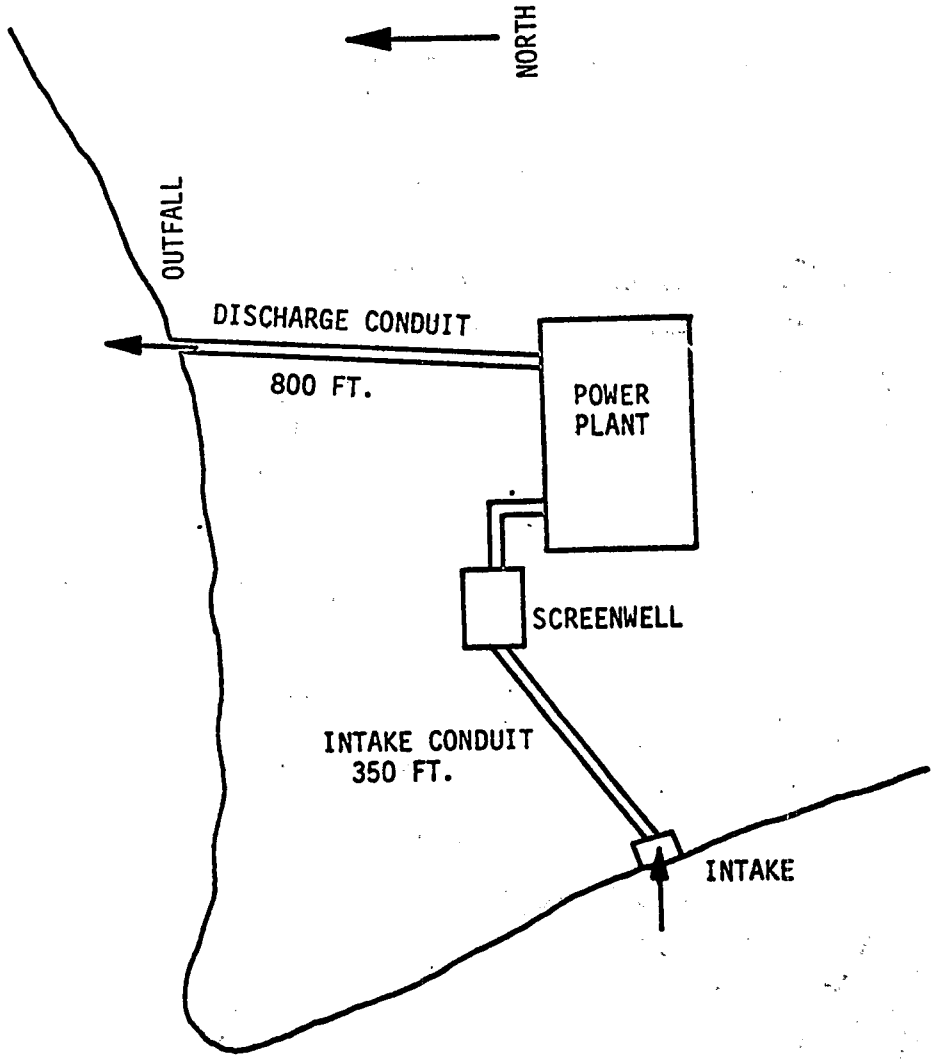

LOCATION OF INTAKE AND OUTFALL - Plant No. 0608

FIGURE II-3

intakes and discharges by building strong physical barriers between them or the excavation of a major channel for the intake or outfall, or both, may not be the best technology. An example of such construction is the Crystal River plant in Florida, which has a dike several miles long projecting into the Gulf of Mexico. While it prevents recirculation, it also prevents the natural circulation for many miles on the coast and interferes with migration of aquatic organisms. The major intake and navigation canal bordering this dike may at times be instrumental in leading organisms into the intake.[50]

From the standpoint of the effect of recirculation on fish attraction, it should be noted that proper location of the inlet point both with regard to site location and water depth is an important element to be considered.

Intake Location with Respect to the Shoreline

As mentioned above and shown in Figure II-1, there are three basic orientations of intakes with respect to the shoreline. The difference among them is the relative position of the water inlet with respect to the shoreline. The intake at the top of the figure has the inlet flush with the shoreline. This intake may also be called a shoreline intake or a bankside intake. The middle intake has the inlet located offshore with a conduit leading to the shore. The offshore inlet may be only a pipe opening as shown, or may include water screening facilities and pumps. The third type of intake uses an open channel inlet (generally excavated) leading to an inland water screening facility. This latter type of intake may also be referred to as an onshore intake.

Each of these different intake orientations may be used for any type of water source (river, lake, estuary, or ocean). The flush inlet and the offshore inlet offer alternate means for withdrawing water in areas where the aquatic population may be minimal. The third scheme (open channel) may have desirable attributes from an aesthetic point of view, but often creates a problem due to fish which collect in open channels. This aspect will be discussed in the design section of this report.

Intake Location with Respect to Water Depth

From the biological standpoint, the depth at which water is taken can be a major factor regarding damage to aquatic

organisms. In some locations, it may be desirable to draw surface water only as shown in Part A of Figure II-4. At other locations, it may be better to draw deep water as shown in Parts B and C of the same figure. A complicating factor is that the desirable water supply depth may vary seasonally or even diurnally, making multilevel intakes environmentally attractive. A typical multilevel intake is shown in Part D of the figure. For water sources where the biologic community is extremely sensitive to intake currents, a deep intake of the infiltration type might be best as shown in Part E of the figure.

Intake Location with Respect to the Balance of the Plant

Some organisms will undergo damage in the passage from the intake screens to the condensers and on the return between the condenser and the natural environment. The extent of the damage is related to the temperature and pressure changes and the times of travel involved. Since the times of travel are related to the distances between the intake, the plant and the outfall, it would be desirable, in cases where incremental damage due to this effect would be significant, to locate the intake and/or outfall as close to the plant as possible. Due to the fact that the temperature of the water containing the entrained organisms increases as this water passes through the condenser and remains at this higher temperature until the water is discharged to the natural environment, this consideration applies even more to the location of the outfall with respect to the plant.

Aquatic Environmental Considerations in Intake Location

The location of the intake should reflect the knowledge of the various members of the aquatic community. The location should be selected to minimize the impact of the intake on the critical aquatic organisms. In general, the considerations leading to the identification of a suitable intake location should include the following:

- avoidance of important spawning areas, juvenile rearing areas, fish migration paths, shellfish beds or any location where field investigations have revealed a particular concentration of aquatic life.

- selection of a depth of water where aquatic life is minimal. This depth may change seasonally or diurnally.

- selection of a location with respect to the river or tidal current where a strong current can assist in

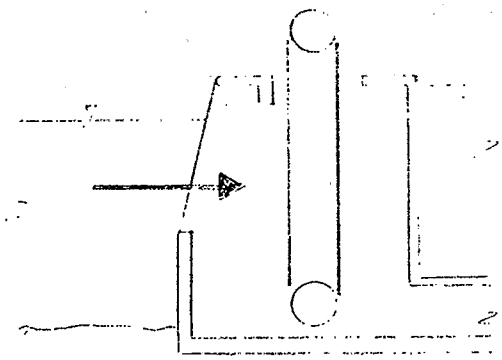

SURFACE INTAKE
(A)

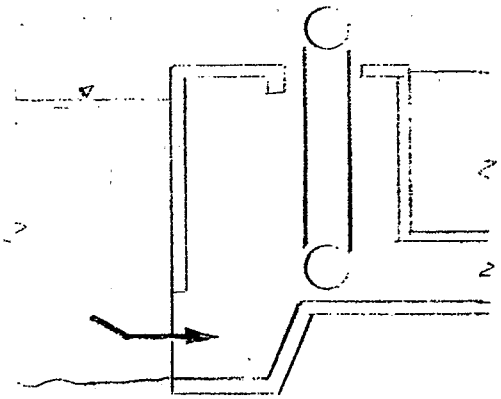

DEEP INTAKE
(B)

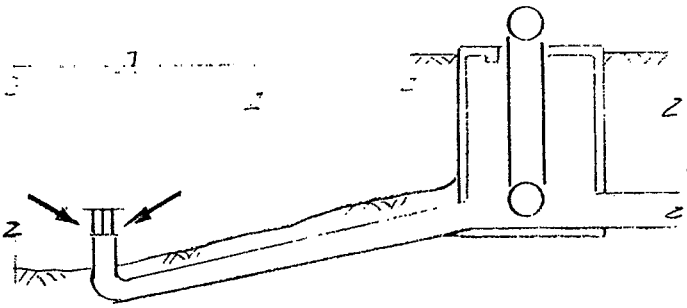

DEEP INTAKE
(C)

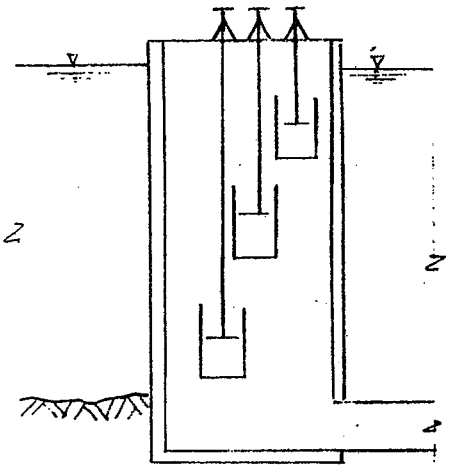

MULTI LEVEL INTAKE
(D)

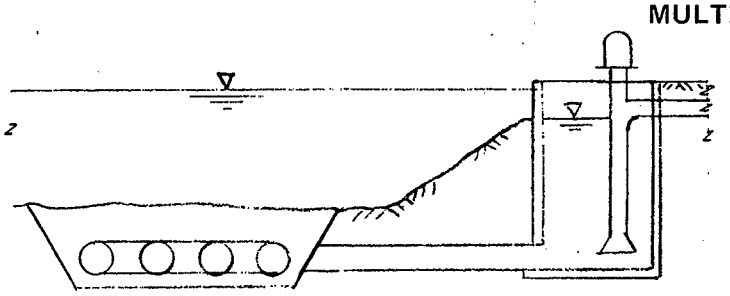

DEEP INTAKE (INFILTRATION)
(E)

FIGURE II-4 INTAKES DRAWING FROM DIFFERENT WATER LEVELS

carrying aquatic life past the inlet area or past the face of screens (if the flush mounted type of setting is used, for example).

- selection of a location suited to the proper technical functioning of the particular screening system to be used. For example, louver and horizontal screen installations have limiting requirements relative to water level variations and intake approach channel configurations which will influence their locations with respect to the source of water.

The application of the above presupposes that sufficient biological investigation has been conducted to establish sensitive areas and critical aquatic organisms. The previous section of the report outlined the type of data required in the procedure for biological data gathering. These data are essential for proper intake location. Furthermore, when returning bypassed fish and other organisms, they should be delivered to a hospitable situation.

General Locational Aspects

Reference 34, prepared by the National Academy of Engineering Committee on Powerplant Siting, contains a body of material which may be useful in the further development of solutions to powerplant siting questions. Considerations relevant to impacts on aquatic life of intake screens, inner-plant passage and other factors are presented corresponding to oceanic, estuarine, riverine, lake and reservoir zones.

SECTION III

DESIGN

Introduction

This section of the report describes the various components which comprise an intake structure. The components include screening devices, trash racks, pumps and fish handling and bypass equipment. This type of presentation is utilized to facilitate an understanding of the function and configuration of the individual components. Following this, the description of components is assembled into complete descriptions of intake designs, with considerations developed for each type of design. The section is presented in parts as follows:

- Screening Systems Design Considerations
- Behavorial Screening Systems
- Physical Screening Systems
- Pumps
- Fish Handling and Bypass Facilities
- Intake Designs

This discussion of intake and screen facilities is relatively comprehensive but is not intended to be all inclusive of designs both in service and under development. There is no intent to restrict designers to the consideration of devices specifically covered in this document.

Screening Systems Design Considerations

By far the most important design consideration for screening systems at intake structures of a given capacity are the velocity characteristics involved, although bypass and recovery systems can be used in some cases to offset disadvantageous velocity characteristics. Intake velocities are usually measured in several ways as follows:

Approach Velocity - Velocity in the screen channel measured upstream of the screen face.

Net Screen Velocity - Velocity through the screen itself. This velocity is always higher than the approach velocity because the net open area is reduced by the screen mesh, screen support structure and debris clogging.

At Entrance Restrictions - velocity at restricted areas such as under or over walls at the intake entrance.

Velocity considerations should be based on the approach velocity since the net screen velocity is constantly changing with debris loading in the waterway. Another important design consideration is the selection of the screen mesh size. This should be based on both fish size and debris loading considerations.

Other environmental factors to be considered in designing intake water screens can affect the configuration of the intake structure itself. These factors include proper location of screens to avoid zones of entrapment, and good hydraulic design to insure uniform flow over the entire screen face. This latter element is influenced by the design of the hydraulic passages both upstream and downstream of the screen. The downstream design also includes the location of pumps.

Approach Velocities

Most existing water screens at intake structures have been designed solely for debris removal. The design criterion is usually that a relatively low head loss be maintained across the screen at the lowest water level anticipated. Typical velocities through the screen mesh fall in the range of 0.61 to 0.76 meters per second (2 to 3 feet per second) which would correlate to screen approach velocities in the range of about 0.24 to 0.34 mps. (0.8 to 1.1 fps) or higher.

Hydraulic head loss is an important design consideration since it controls the pressure loading on all moving parts of the screen. Thus, lowering the head loss across the screen lowers the operating cost of the screen and increases screen life. Head loss increases as the square of the approach velocity, and becomes even greater as debris clogging causes increased turbulance across the screen and reduces the net screen area. The effect of these factors on head loss is shown in Figure III-1. This plot is based on

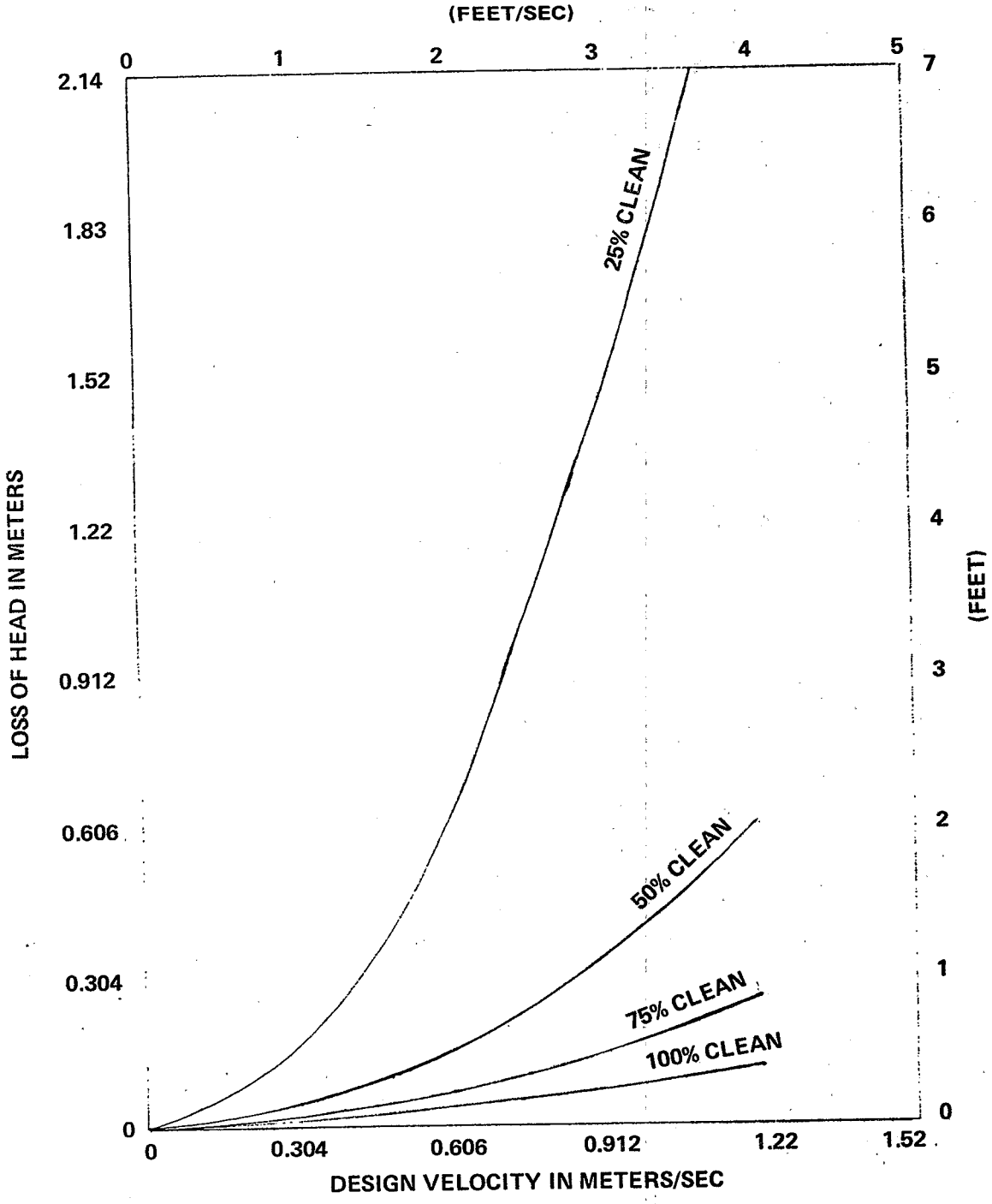

FIGURE III-1 LOSS OF HEAD THROUGH TRAVELING WATER SCREENS
0.95 CM (3/8") OPENING

0.95 cm (3/8") galvanized wire mesh. Screen velocity, which is related to screen opening, is also important because of its possible impact on impinged organisms.

Many intermittently operated traveling screens are designed to be operated under a maximum head loss of 1.5 meters (5 ft). Some traveling screens operate continuously at a lower head loss, generally 0.3 to 0.6 meters (1 to 2 ft). Some traveling screens are rotated once every 4 to 8 hours for 5 to 10 minutes for low head losses, rotated more often for incrementally higher head losses, and run continuously at high speed for the highest head losses. Many powerplant intakes include a pump trip-out to shut off the circulating water pumps automatically when the head loss exceeds 1.5 meters (5 ft) or when the downstream water level drops to some predetermined level. In the absence of such a trip-out provision, head differential across the screen would rapidly increase to the point of screen collapse and possible damage to the pumps.

Another important design feature of traveling water screens is the rate of screen travel when operating. Screens that are not intended for continuous operation are designed for a single operating speed of 3.1 meters per minute (10 fpm), although speeds as low as 0.6 meters per minute (2 fpm) and as high as 6.1 meters per minute (20 fpm) have been used at particular locations. For continuous screen operation (rarely used at powerplant intakes) or for use under varying flow conditions, two speed screens are used, 0.8 and 3.1 mps (2.5 and 10 fps) being the usual speeds. Screens are generally operated once per shift and are rotated automatically in response to water level differential across the screen face. The importance of considering operational frequency and screen speed characteristics in minimizing impingement effects will be covered in the section on operation and maintenance of intake structures.

Much of the reported research would indicate that considerably lower approach velocities than the 0.2 to 0.34 mps (0.8 to 1.1 fps) range shown above may be required to protect against impingement of certain species of fish. Table III-1 provides a tabulation of fish swimming capability of various species taken from Reference 21. It is included as a sample of the type of information that is available or may be obtained, with the exception that it is not indicated whether the velocities are sustained, burst, or cruising speeds. This type of distinction may be important to intake velocity considerations in specific cases. The table shows that fish swimming ability is a function of both fish size and the ambient water

TABLE III-1 FISH MAXIMUM SWIMMING SPEEDS

Fish	Size Range cm	Size Range inch	Water Temp. C	Water Temp. F	Maximum Speed all - best mps	Maximum Speed all - best fps
White Perch	7.9 - 8.4	3.1 - 3.3	5	41	0.16 - 0.25	0.52 - 0.81
	6.1 - 7.1	2.4 - 2.8	10	50	0.19 - 0.23	0.63 - 0.77
	3.0 - 4.3	1.2 - 1.7	24	75	0.12 - 0.30	0.4 - 1.0
	3.3 - 4.7	1.3 - 1.8	27	80	0.15 - 0.30	0.5 - 1.0
	5.1 - 6.8	2.0 - 2.7	27	80	0.22 - 0.40	0.7 - 1.3
	4.1 - 5.1	1.6 - 2.0	32	90	0.22 - 0.40	0.7 - 1.1
	5.1 - 6.8	2.0 - 2.7	32	90	0.28 - 0.43	0.9 - 1.4
Striped Bass	3.0 - 4.8	1.2 - 1.9	24	75	0.18 - 0.33	0.6 - 1.1
	3.0 - 4.8	1.2 - 1.9	27	80	0.18 - 0.40	0.6 - 1.3
	5.1 - 6.4	2.0 - 2.5	27	80	0.33 - 0.43	1.1 - 1.4
Stripped Bass	1.9 - 3.8	0.75- 1.5	-	-	0.28 - 0.43	0.9 - 1.4
	0.25- 7.6	0.1 - 3.0	-	-	0.55 - 0.88	1.8 - 2.9
	7.6 -14.0	3.0 - 5.5	-	-	0.49 - 0.88	1.6 - 2.9
King Salmon	3.0 - 3.8	1.2 - 1.5	-	-	0.28 - 0.52	0.9 - 1.7
	3.0 - 4.8	1.2 - 1.9	-	-	0.15 - 0.46	0.5 - 1.5

temperature. An inspection of the lower levels of swimming capability within each species shows that approach velocities of considerably less than 0.31 mps (1 fps) may be desirable. It may be important that cruising, sustaining, and darting swimming speeds be considered before establishing approach velocity needs.

Figure III-2 shows the results of additional studies of the impact of volume flow and approach velocities on fish impingement. These studies were conducted at a major nuclear plant in the Northeast and reported in Reference 8 g. The involved species were the white perch and striped bass. It is important to note that this study was not done during the critical winter months when fish swimming ability would be at its lowest. The figure appears to indicate a marked increase in impingement above intake velocities of approximately 0.2 mps (0.8 fps).

Screen kill rate is often claimed to be a function of the velocity of flow of the cooling water into the intake structure, the higher fluid momentum forces causing greater entrapment of fish. This is probably true to a certain extent but volume also plays an important role. Plotting the data of Figure III-2 as "fish count per unit of intake flow volume" versus the "intake current velocity" , to separate velocity effects from intake flow volume (capacity) effects, shows no apparent correlation with velocity. Therefore, intake velocity itself may not be a significant factor compared to intake flow volume.

Figure III-3 shows the results of another study which was reported in Reference 24. This figure shows the swimming ability of young salmon. The effects of both size and temperature on swimming ability are significant. Note, however, that the mean cruising speed for all sizes is a relatively low 0.2 mps (0.5 fps) for the colder winter temperatures. Oxygen level, as well as temperature, may be a determining factor in fish-swimming ability. The selection of the design approach velocity should conservatively reflect the degree to which the conditions of the laboratory fish-swimming tests correspond to the conditions of the intake considering that the natural behavior of the fish and their escape response are based upon a complexity of factors. Futhermore the magnitude of the horizontal velocity of the stream at the intake will influence the ability of the fish to avoid its intake screen and thus affect the influence of the approach velocity in guiding aquatic organisms into the cooling water structure. A further significant parameter could be the current at the screen itself which would determine the ease of escape of a

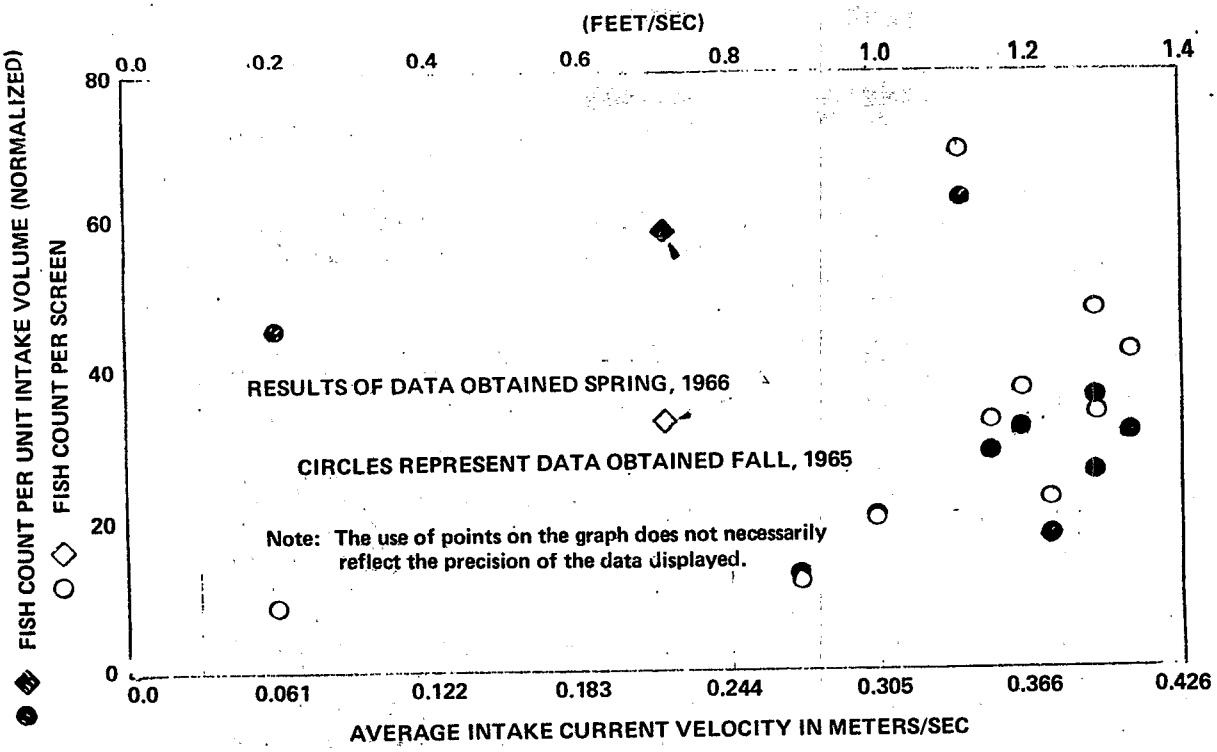

FIGURE III-2 INTAKE FLOW AND VELOCITY VS FISH COUNT

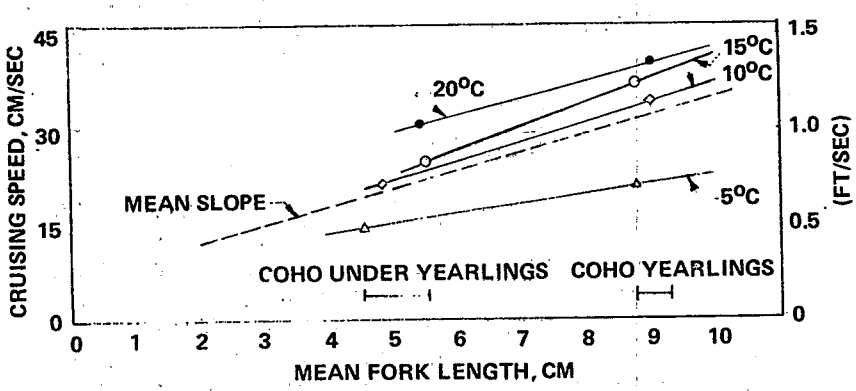

FIGURE III-3 MEAN CRUISING SPEED FOR UNDER YEARLINGS AND YEARLING COHO SALMON FOR FOUR LEVEL OF ACCLIMATION

fish once impinged and also the extent of damage to the fish while impinged.

Experience at existing intakes or from controlled testing has resulted in the following general notions for particular types of intake systems:

- Systems employing a guidance principle such as louvers may have highest guidance efficiency at relatively high approach velocities, generally in the range of 1 to 3 ft/sec.

- Intakes employing a fish recovery, and handling system, such as vertical traveling screens with scoops for lifting fish, may have their highest survival rate when there is a relatively high approach velocity. Fish tend to swim against a low approach velocity until they are fatigued and, therefore, when they are eventually picked up in the recovery device they are more susceptible to the stress imposed by handling. At relatively high velocities the fish are carried in the recovery system and picked up before they are fatigued.

- Low approach velocities may be more desirable for intake systems which rely on sustained swimming capability of fish to avoid entrapment.

- An efficient, properly-designed or naturally-occurring bypass system, moving fish quickly past and out of the influence of the screens, may permit higher approach velocities.

Effective Screen Length and Uniform Velocities

It is important to determine the effective dimension of screen below the water line to be used in calculating the approach velocity. Not all of the screen length below the water line contributes effectively to screening. The effective length of screen is influenced by both the hydraulic design of the intake and by bottom effects related to the screen boot, boot plate, etc. Another important consideration in determining the effective screen length is the effect of upstream protrusions, particularly the effect of walls installed to select intake waters from the top or bottom layers of the water body. The effect of walls on the effective screen area is shown in Figure III-4. The illustration shows a wall installed to limit draft to the lower levels of the water body. The wall limits the flow through the screen area to a relatively narrow band at the

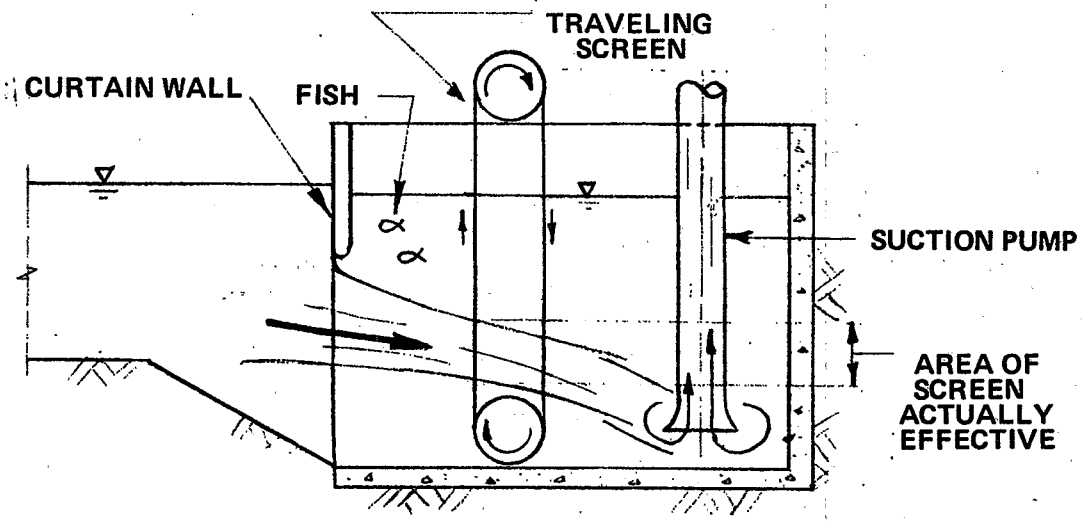

FIGURE III-4 EFFECTIVE SCREEN AREA

bottom of the screen. If walls are installed, only the effective screen area should be used to determine the approach velocity. Walls can be undesirable when they create dead spaces where fish can accumulate and from which they may not be able to escape.

Another important design consideration is the uniformity of velocities across the full face of the screen. An example of poor hydraulic design is shown in Figure III-5. The sketch shows large variations in channel velocities which greatly reduce the effectiveness of the screen. To eliminate these undesirable conditions, the relative locations of pumps, screens and any upstream protrusions should be carefully studied. The standards of the Hydraulic Institute recommend screen to pump distances. However, these are based on pump performance criteria only. Any radical departure from standard intake design should be modeled to establish the actual screen velocity and the extent of any localized variations.

Selection of Screen Mesh Size

The selection of screen mesh size is generally based on removal of trash that could clog condenser tubes. A generally accepted rule of thumb for selecting the screen mesh size is that the clear openings in the screen should be limited to about half the diameter of the heat exchanger tubes. The powerplant industry has become fairly standardized on a 0.95 cm (3/8") mesh size (equivalent to 1.9 cm (3/4") ID tubes) even though different size condenser tubes are used in other condenser designs.

The effect of screen mesh size on the performance of screens is quite significant as shown in Table III-2. The data were supplied by a leading screen manufacturer. The table shows that the screen efficiencies (ratio of net open areas of the screen to total channel area) decrease rapidly as the mesh size decreases. The table also shows that using alloy metals in place of galvanized metals will increase the screen efficiency as will the use of wider and deeper screens. Alloy metals are generally used to inhibit corrosion in high salinity waters, such as experienced in ocean or estuarine intakes, or in other corrosive waters. PVC screen mesh is also used. The effective area is less than for wire mesh for a given screen size. Thus if mesh velocity is a limiting criteria (rather than screen approach velocity) the total screen area must be greater.

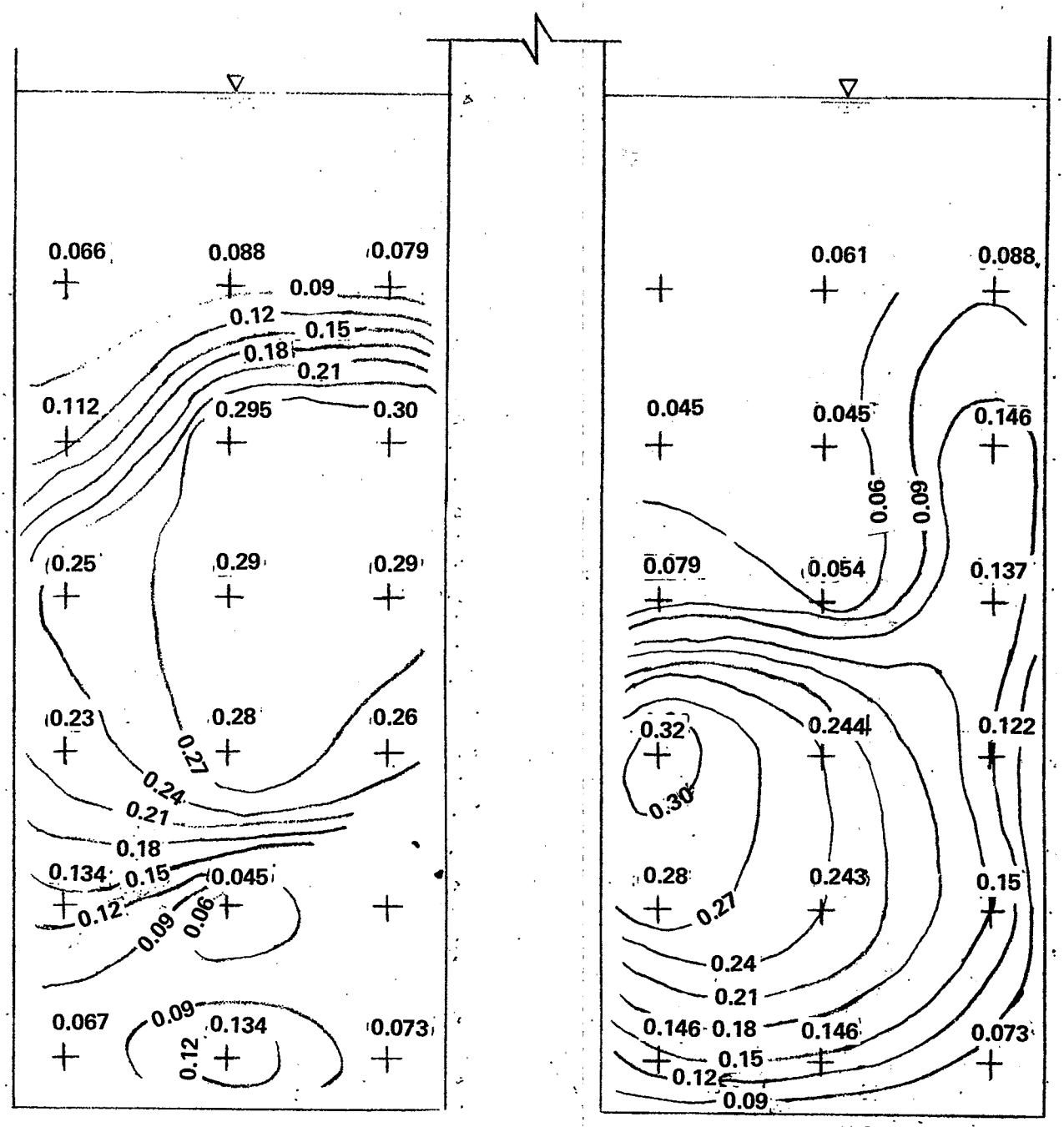

NOTES:
1. VELOCITIES SHOWN IN METERS/SEC
2. MEASUREMENT MADE BETWEEN DEICING LOOP PIPE AND BAR RACKS IN MARCH 1970
3. MEASUREMENT MADE AT A WATER FLOW RATE 60% OF FULL CAPABILITY

FIGURE III-5 UNDESIRABLE INTAKE WELL VELOCITY PROFILES

TABLE III-2

TRAVELING WATER SCREEN EFFICIENCIES

Clear Opening Size cm.	Clear Opening Size in.	Wire Selection Material	Wire Selection Diameter cm.	Wire Selection Diameter in.	Wire Selection W&M Ga.	Screen Basket Width Meter (Ft) 0.61 (2)	0.91 (3)	1.22 (4)	1.52 (5)	1.82 (6)	2.13 (7)	2.44 (8)	2.74 (9)	3.05 (10)	3.35 (11)	3.64 (12)	3.96 (13)	4.26 (14)
0.32	1/8	Alloy	0.12	.047	18	.322	.431	.436	.438	.440	.441	.442	.442	.443	.444	.444	.445	.445
		Galv.	0.16	.063	16	.334	.361	.365	.367	.368	.369	.370	.370	.371	.371	.372	.372	.373
0.48	3/16	Alloy	0.12	.047	18	.511	.522	.527	.530	.533	.534	.534	.525	.536	.537	.537	.538	.539
		Galv.	0.16	.063	16	.445	.457	.462	.465	.467	.468	.468	.469	.470	.471	.471	.472	.473
0.63	1/4	Alloy	0.12	.063	16	.510	.451	.526	.530	.532	.533	.534	.535	.535	.536	.536	.537	.538
		Galv.	0.20	.080	14	.459	.469	.474	.476	.478	.479	.480	.481	.482	.483	.483	.484	.485
0.95	3/8	Alloy	0.20	.080	14	.543	.555	.560	.564	.566	.567	.568	.569	.570	.571	.571	.572	.573
		Galv.	0.27	.105	12	.488	.498	.503	.506	.508	.509	.510	.511	.512	.513	.513	.514	.515
1.28	1/2	Alloy	0.27	.105	12	.546	.558	.566	.567	.569	.570	.571	.572	.573	.574	.575	.575	.576
		Galv.	0.34	.135	10	.496	.506	.512	.515	.517	.518	.518	.519	.520	.521	.521	.522	.523
1.58	5/8	Alloy	0.27	.105	12	.587	.600	.606	.609	.612	.613	.614	.615	.616	.617	.618	.618	.619
		Galv.	0.34	.135	10	.541	.552	.558	.561	.563	.565	.565	.566	.567	.568	.568	.569	.570

Alloy wire: Copper, stainless, monel, etc. - greater corrosion resistance permits use of smaller diameter wire, improves efficiencies.

Some work has been done toward establishing screen mesh size as a function of the size of fish to be screened. Reference 24 reports the following empirically derived relationships:

$$M = 0.04\ (L-1.35)F;\ 5 \leq F \leq 6.5$$

$$M = 0.03\ (L-0.85)F;\ 6.5 \leq F \leq 8.0$$

Where

M = maximum screen mesh opening in inches

L = length of the fish in inches

F = L/D = fineness ratio

D = body depth in inches

Some results of these investigations are noted in Figure III-6 along with data from earlier experiments conducted by Kerr.[47] These curves were developed on the basis of relatively few species and numbers of fish and therefore a specific recommendation based on these relationships cannot be made. However, the work does establish a framework for consideration of additional data as it becomes available.

Behavioral Screening Systems

General

A behavioral screening system (behavioral barrier) employs one or more of several stimuli to cause fish to move in a desired manner, and, in so doing, avoid entrapment at an intake structure. The various types of stimuli tested have included: light, sound, electric fields, air bubble currents, and several types of stream flow direction and velocity change mechanisms. Most systems have been designed to repel fish away from a physical barrier and relatively little work has been done on systems designed to attract fish away from the danger zones.

Behavioral screening systems rely on the swimming ability of the various species to avoid the artificial stimuli. Swimming ability is related to fish size within a species and is quite variable between different species of fish. Swimming ability is significantly affected by temperature with markedly reduced swimming ability demonstrated in the colder winter months. Most behavioral systems are ineffective in the presence of a higher priority stimulus,

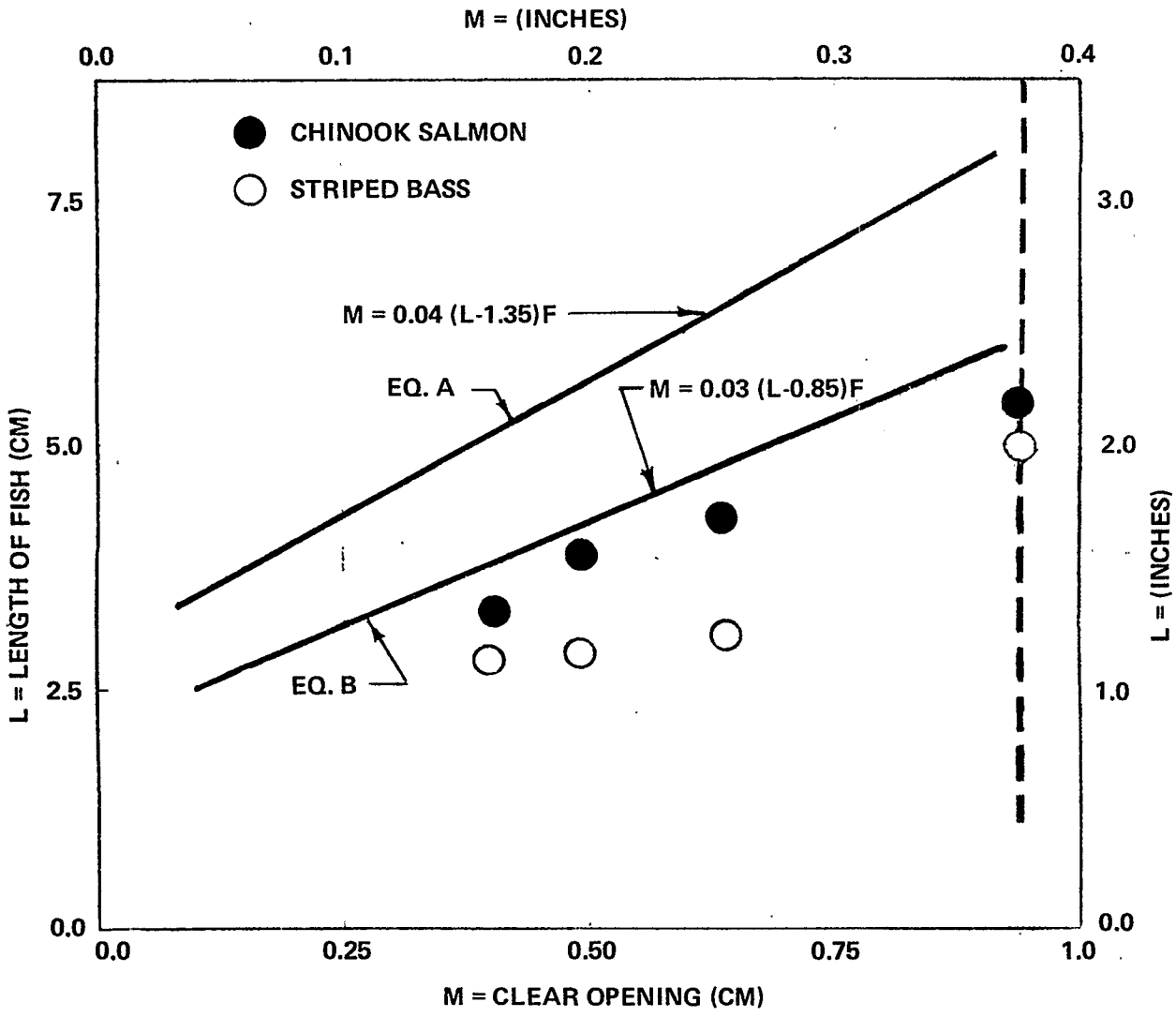

FIGURE III-6 SCREEN MESH SIZE SELECTION
(BASED ON LENGTH OF FISH)

such as a predator. For these reasons, most behavioral systems have not demonstrated consistent high level performance.

In addition, all behavioral systems require a passageway to allow the fish to move away from the stimulus. The location and configuration of the required passageway is often more difficult to develop than the behavioral barrier itself. The following discussion traces the development of several of the behavioral screens in an attempt to establish their applicability in intake design.

Electric Screens

The basis of the electric screen approach is described in Reference 18 and is shown in Figure III-7. Immersed electrodes and a ground wire are used to set up an electric field which repels fish swimming into it. The important design parameters in electric screening are the spacing of electrodes, the separation between rows of electrodes, the voltage applied to the system, the pulse frequency, the pulse duration, and the electrical conductivity of the water. Typical design parameters for both test systems and full-scale systems are shown in Table III-3. The data for this table were taken from Reference 13. Most of the test systems established by the former U. S. Fish and Wildlife Service (now the National Marine Fisheries Service) were applied to repel (and divert) upstream migrating fish (adult fish). In most waters, but particularly in brine or salt waters, conductivity can vary widely with stream flows, tidal changes and storms, thus creating a need for proper adjustment of the electric screens to maintain the electric potentials desired.

Typically, salmon respond to the screen in the following manner. They swim upstream against the flow, enter the electric field and jump violently back away from it, retreating several hundred feet downstream. After several attempts and shocks they approach more slowly and follow the angled electric field to the safe passageway provided. If they are immediately stunned, the downstream current will carry them safely away from the screen.

The electric screen has the advantage of flexibility and may be applied intermittently during time of need for intake protection. The major disadvantages of the electric screening system are as follows:

- Cannot be used to screen downstream migrants.

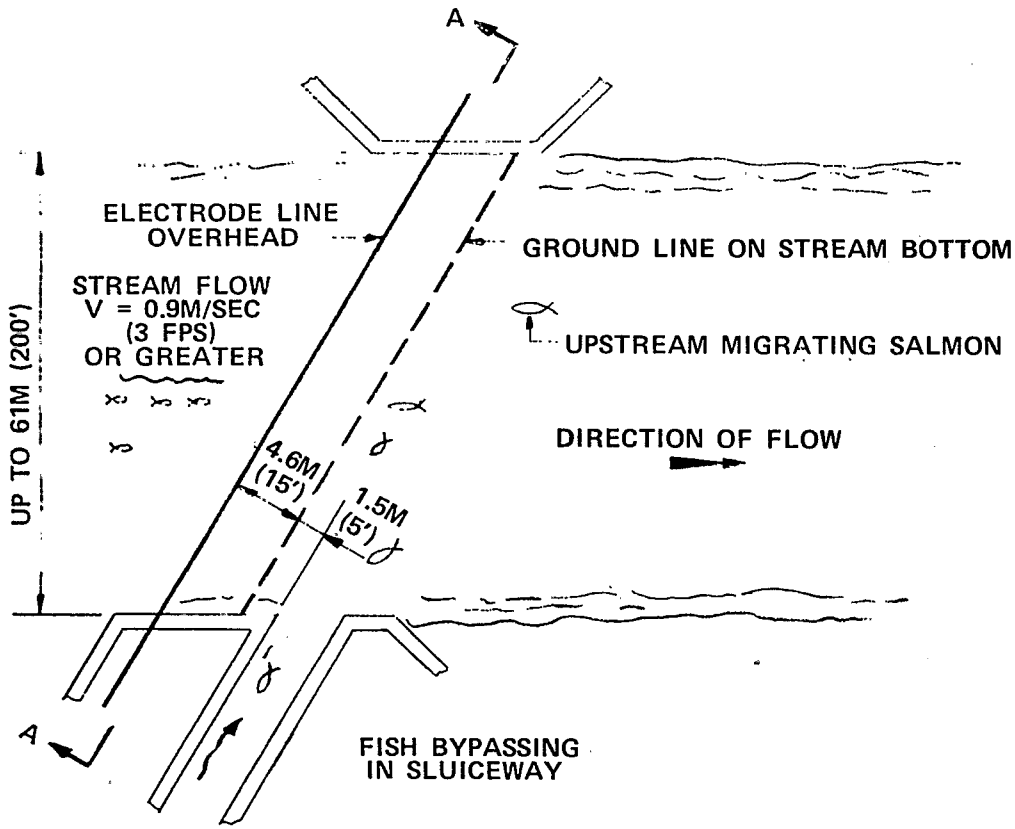

PLAN

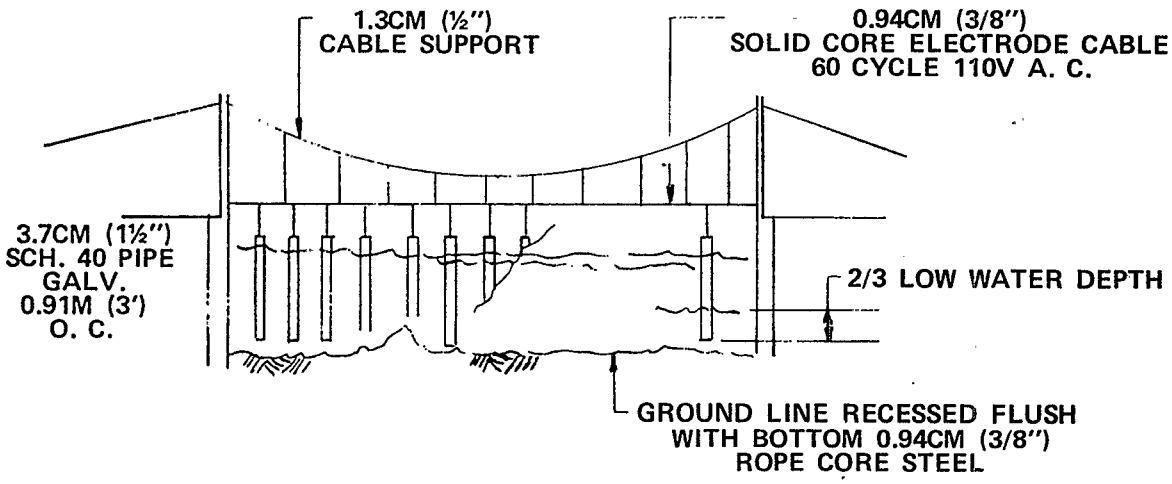

ELEV. A-A

FIGURE III-7 TYPICAL ELECTRIC FISH FENCE

TABLE III-3

ELECTRIC SCREEN APPLICATIONS

SUMMARY OF DESIGN DATA

Location	Specie	Barrier Description	Source Voltage (Volts)	Pulse Frequency (Pulses/sec)	Pulse Duration (Milli/sec)	Performance
*Pacific Northwest	Squawfish	2 rows 0.46m (18") apart	60	2	10-30	good
*Pacific Northwest	Salmon fingerlings	5.0cm (2") ø electrodes in parallel rows @ 40° angle to flow	NA	8	40	68% diverted
*Pacific Northwest	Salmon fingerlings	5.0cm (2") ø tubular aluminum electrodes @ 0.51m (20") spacing in parallel rows	210	3-4	20-40	82% diverted
*Idaho	Squawfish	NA	140	10	50	80% diverted
San Diego (water intake)	Mixed	NA	500-900	2-3	10	effective for large fish
Indiana (Power-plant #1809)	Perch	2 parallel rows 0.45m (18") apart 0.30m (12") spacing between electrodes	300-600	1-5	NA	effective
N. Y. (Power-plant #3608)	Fresh water game fish	3.2cm (1¼") ø electrodes @0.3m (12") spacing in rows spaced 0.91m (3') apart	120	Continuous	Continuous	effective

* Test systems

- Cannot be used to screen a mixture of sizes and species because of different reactions that are size and species related.

- Cannot be used in esturarine or ocean waters because of high electrical losses.

- Can be dangerous to both humans and animals because of the high voltages used.

The U.S. Fish and Wildlife Service terminated its research on electric screens in 1965. Over fifteen years of concentrated research had failed to solve many of the major problems of electric screening systems. Several utilities have investigated the problem in depth and some research is still being conducted, but not much success has been shown to date for downstream-migrant fish. In summary, electric screens, while not generally successful, may work in some situations.

Air Bubble Screens

The fish response employed by an air bubble screen is avoidance of a physical barrier. In its simplest form, the bubble barrier consists of an air header with equally spaced jets arranged to provide a continuous curtain of air bubbles over the entire stream cross section, as shown on Figure III-8.

Historically it was also felt that the sensory mechanism involved in utilizing the air bubble screen was entirely visual. This led to the conclusion, long held, that the screen was not useful at night. More recent findings of laboratory experiments conducted by a leading manufacturer, Reference 30, tend to refute this belief. Design and performance data at two existing power stations were also evaluated. In one case the screen was successful and in the other unsuccessful. The laboratory tests were conducted at the Edenton National Fish Hatchery in North Carolina and involved striped bass and shad, 80 mm to 250 mm in length. The test channel used is shown in Figure III-9. The fish were hatchery reared and may not have shown typical swimming behavior. Also note from the figure that the barrier was established to prevent the progress of fish swimming against the flow, which is the opposite of an intake situation. The results of the tests are reported in Reference 30 and are summarized as follows.

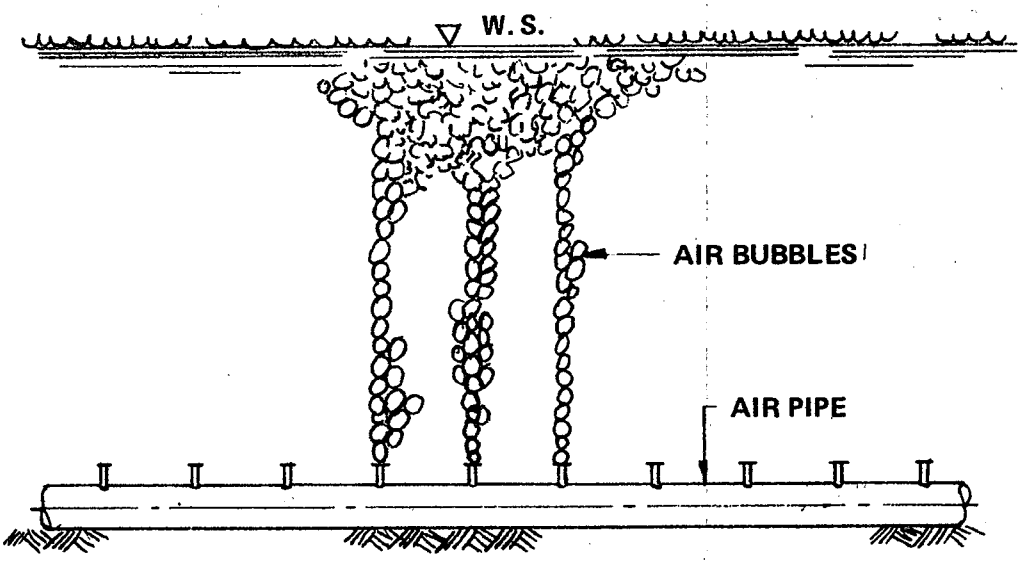

FIGURE III-8 AIR BUBBLE SCREEN TO DIVERT FISH FROM WATER INTAKE

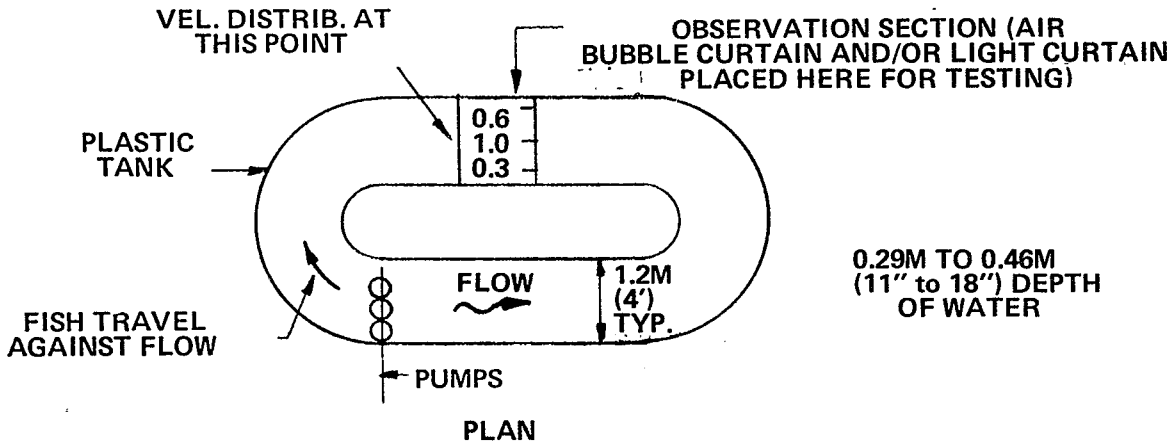

FIGURE III-9 CHANNEL TO TEST EFFECTIVENESS OF AIR BUBBLE SCREEN AT NORTH CAROLINA FISH HATCHERY

- When the air bubble curtain was placed entirely across the 1.2m (4') channel, the fish did not pass through in any of the tests, even when attempts were made to chase them through the curtain.

- Temperature does influence the performance of the barrier. The tests were conducted at 10°C, 4.5°C and 0.8°C (50°F, 40°F, and 33.5°F). The bubble barrier was a complete success at 10°C(50°F) and at 4.5°C(40°F). At 0.8°C(33.5°F) the fish were lethargic and simply drifted through the barrier with the current. This latter effect would probably be shared with all systems which rely on swimming ability of fish to escape an intake.

- This particular bubble barrier appeared to be as successful in complete darkness as well as in daylight. This tends to refute the long held conclusion that these systems will not work at night. It also indicates that sensory mechanisms other than visual are involved, and that future work is required to define the mechanisms involved in fish response to this type of situation.

- The air was injected through 0.08 cm (1/32") round holes at 2.5 cm (1") spacing. At 5.0 cm (2") to 7.5 cm (3") spacing the fish passed between the rising bubble columns.

- When the bubble system was placed 5.0 cm (2") off the floor, fish did not pass under it. When placed any further off the floor of the channel, the fish passed unimpeded under the curtain.

A successful application of an air bubble screen was reported in Reference 13. The system was installed at a powerplant intake (plant no. 5521) on Lake Michigan in Wisconsin. The principal fish species involved was the Alewife, a variety of herring which is a heavily schooling fish having a length between 15 and 20 cm (6" and 8"). The plant has an average cooling water flow of some 18.3 cu m/sec (290,000 gpm). The air bubble barrier extends across the intake channel, well in front of the intake structure in about 3.6 to 4.0m (12' - 13') of water. The air bubble system consists of 2.5 cm (1") diameter PVC lines with holes drilled on 10 cm (4") centers. The total air flow is approximately 0.047 cu m/sec (100 cfm) at 413.7 kN/sq m (60 psi). The air is supplied by a conventional compressor drawing 15,000 to 19,000 W (20 - 25 hp). The optimum air flow was measured at 0.01 cu m/min (0.36 cfm) per 0.3 m (1 foot) of air header at 413.70 kN/sq m (60 psi).

Prior to the installation of the air bubble screen, there had been several shutdowns of the plant caused by schools of Alewives jamming the screens and shutting off the flow of cooling water. Since the installation of the screen, there have been only one or two shutdowns of this type during more than four years of operation. The major purpose of the air bubble screen is to repel schools of fish rather than to stop all individuals. The operation of the bubble system at this plant has been equally successful at night as in daylight. The operation of this system was considered so successful that another utility located on Lake Michigan is installing a similar system at a new nuclear station. (plant no. 5519)

The performance of a similar system installed at a major nuclear station in the Northeast (plant no. 3608) was exactly opposite of that described above. The species involved at this plant were the striped bass and white perch. When the plant first went on line, there was a serious loss of larger fish on the screens. A series of modifications were made in an attempt to reduce the loss. The modifications are shown in Figure III-10 and consisted of the following:

- Removal of eight feet of the original curtain wall to reduce the intake velocity. Average velocity over the face of the screen before the modification was about 0.30 m/s (1 fps). After making the change, the summer average velocity was 0.18 m/sec (0.60 fps), and the winter average velocity was 0.048 m/sec (0.15 fps).

- The installation of a fixed screen mounted flush with the front face of the intake to allow the fish to swim to the right or left to escape entrapment. This modification also eliminated the entrapment zone between the face of the screen and the existing vertical traveling screen.

- The installation of an air bubble system in front of one of the four bays of the intake. The bubble system consisted of two vertical rows of horizontal bubbler pipes. The first row was located three feet in front of the intake and the second row was located six feet in front of the intake. Each row of bubbler pipes has seven horizontal pipes in a four foot center to center spacing. Air was discharged through 0.08 cm (1/32 inch) opening at 1.3 cm (0.5 inch) center to center spacing. The first tests were run with 0.42 cu m/s (900 cfm) of air which was far too large a quantity. The surface of the water in front of the intake rose by as much as one

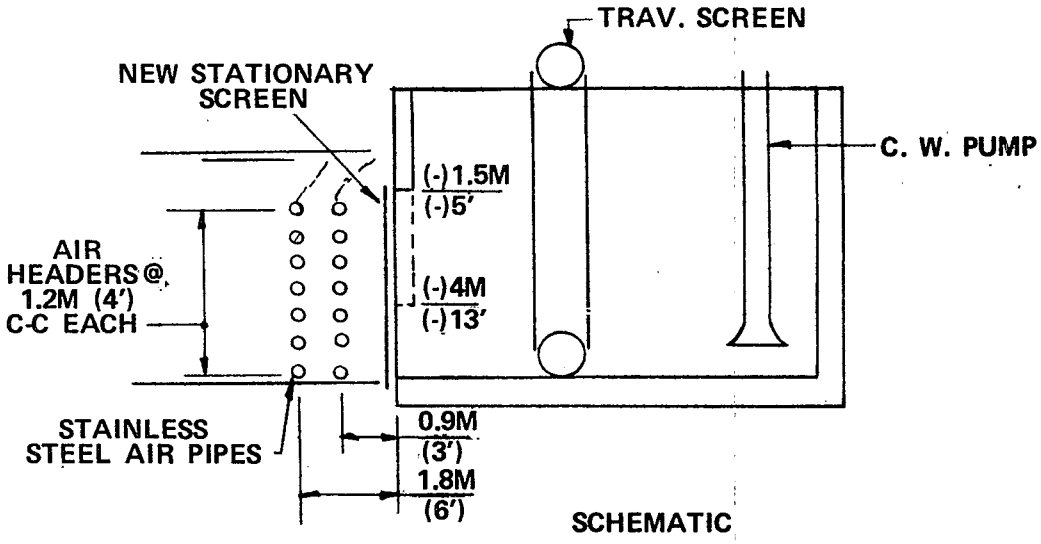

FIGURE III-10 BUBBLE SCREEN INSTALLATION AT PLANT NO. 3608 TO REPEL FISH FROM WATER INTAKE

foot in violent churning action. The entrained air caused vibration problems in the pumps. The quantity of air was subsequently reduced to 0.19 cu m/s (400 cfm) which is the design value used in modifying all bays. The total cost of these modifications for three generating units at plant no. 3608 was approximately $3.1 million. However, since this cost includes the modification of intake bays it is not directly suitable to judging the cost of air bubble systems per se.

The results of these modifications are as follows:

- The effect of the air apparently was to reduce the number of fish entering the bay equipped with the bubble system, but the number of fish entering the remaining three bays increased.

- During July, 1972, tests, the test engineers were able to discern no improvements in fish entrapment during the daytime; at night the fish being trapped in the bay equipped with the bubble system appeared to be significantly greater than in the bays with no bubbler.

- The bubble barrier did appear to be effective in controlling ice in front of the intake during freezing conditions. This fact makes the bubble system attractive as a possible replacement for the hot water recirculation systems which are currently being used to control ice at many existing installations. The problems associated with hot water recirculation have been discussed in an earlier section.

Air bubble screen tests have been conducted with salmon by both the Canadian Department of Fisheries and the National Marine Fisheries Service (formerly Bureau of Commerical Fisheries under the U.S. Fish and Wildlife Service). Tests conducted at the Tracy Pumping Plant in the early 1950's and under the 1964 Fish Passage Research Program, demonstrated a large difference between night and day passage with salmon with better response during the day.[50]

In summary, the air bubble system may have some application at certain types of intakes. The system appears to be most effective in repelling schooling fish. However, the mechanism of bubble screening is not sufficiently well understood to recommend its adoption generally.

Behavioral Systems Employing Changes in Flow Direction

The propensity of most species of fish to avoid abrupt changes in flow direction and velocity has been demonstrated on several occasions. This ability of fish to avoid horizontal change in direction and velocity is the principle on which the louver fish diverting system is based. On the other hand, fish are generally insensitive to changes in vertical flow characteristics. This indifference of most species to vertical changes in flow regimen is the principle upon which the "fish cap" or "velocity cap" intake is based.

Louver Barrier

The principle of the louver diverter is illustrated in Figure III-11. The individual louver panels are placed at an angle of 90° to the direction of flow and are followed by flow straighteners. The abrupt change in velocity and direction form a barrier through which the fish will not pass if an escape route is provided. The stream velocity is represented in the figure as V_s. Upon sensing the barrier the fish will orient perpendicular to the barrier and attempt to swim away at a velocity V_f. The resultant velocity V_r carries the fish downstream roughly parallel to the barrier to the bypass located at the downstream end of the barrier. The controlling parameters in the design of the louver system are the channel velocity V_s, the angle of inclination of the barrier with respect to the channel flow (10° to 15° recommended) and the spacing between louver panels which is related to the fish size.

Most of the available performance data on the louver design have come from tests of two prototype installations at irrigation intakes in the Sacramento-San Joaquin delta of California: the Tracy Pumping Plant of the California Department of Water Resources, and the Delta Plant of the California Department of Fish and Game.[47] The Delta intake is shown on Figure III-12. The facility is designed for a flow of 170 cu m/s (6,000 cfs), and was tested at approach velocities to the louver of 0.46 to 1.08 m/s (1.5 - 3.5 fps) with bypass velocities of 1.2 to 1.6 times the approach velocity.

The fish separation efficiency of the louver system drops severely with an increase in velocity through the louvers. For velocities of 0.46 to 0.6 m/s (1.5 - 2 fps), efficiency was 61% with 15 mm fish and 95% with 40 mm fish. When the velocity was increased to 1.1 m/s (3.5 fps), efficiency was 35% for 15 mm (0.6 in) fish and 70% for 40 mm (1.6 in) fish. The following conclusions were reached as a result of these tests.

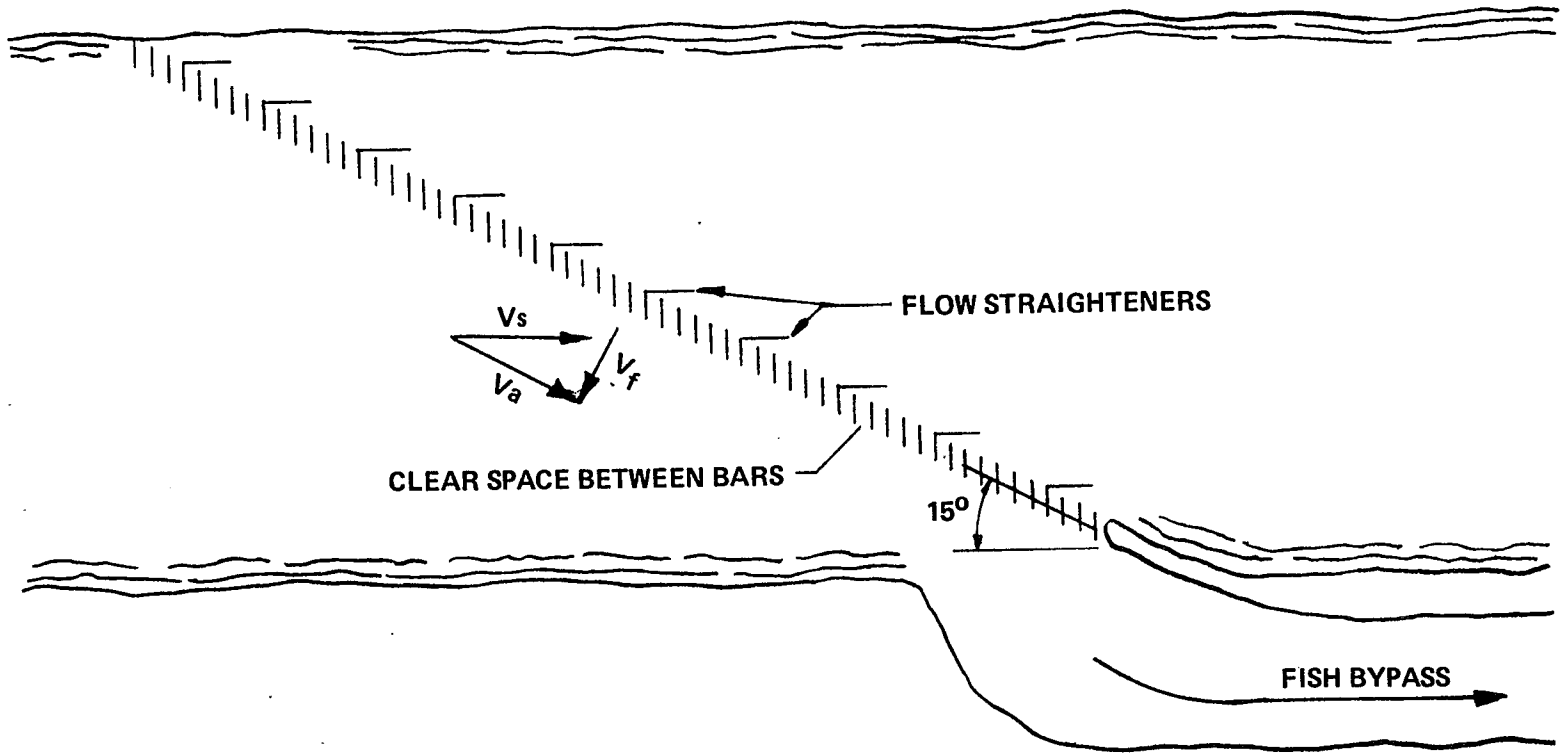

FIGURE III-11 LOUVER DIVERTER-SCHEMATIC

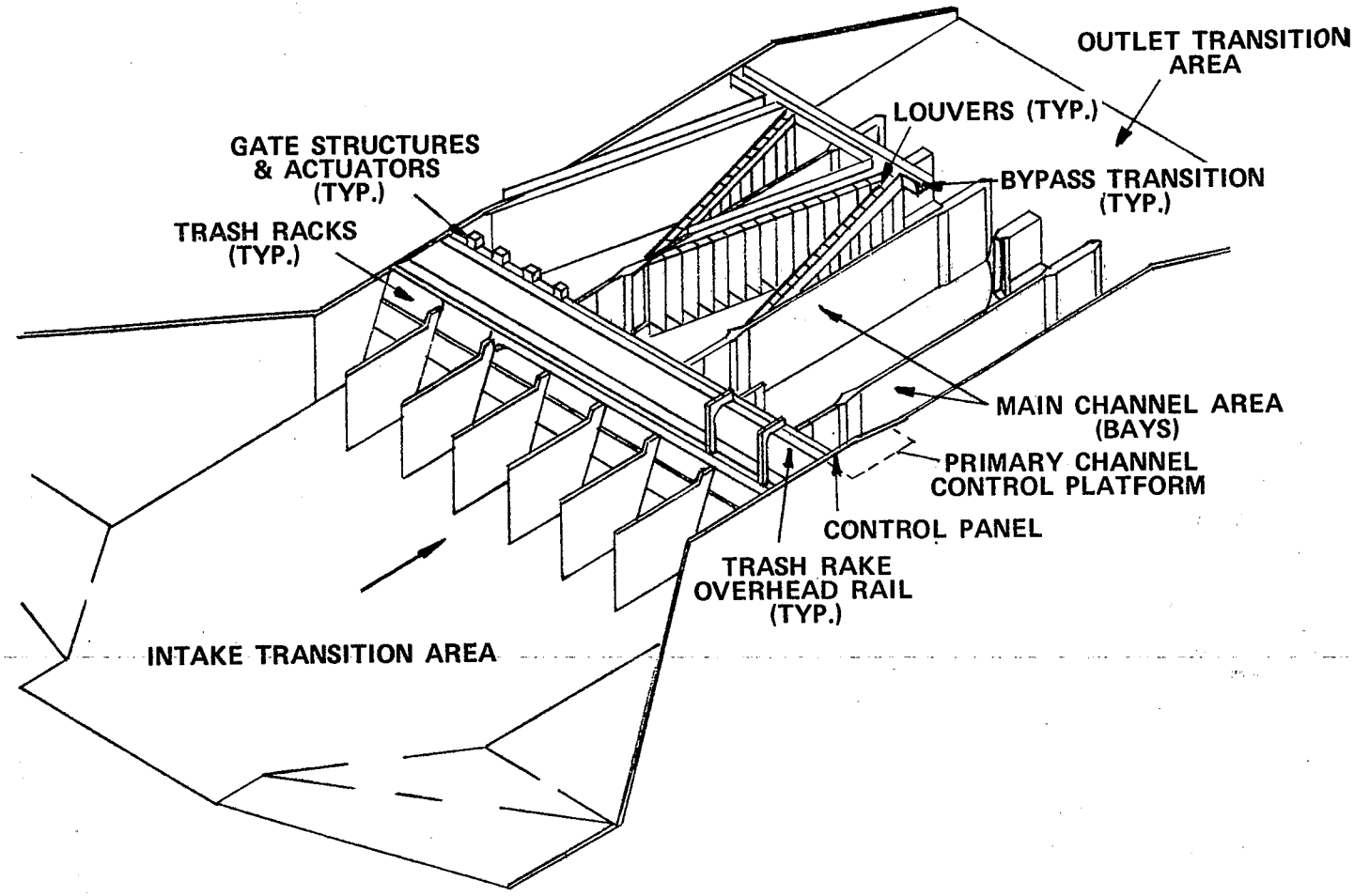

FIGURE III-12 DELTA FISH FACILITY PRIMARY CHANNEL SYSTEM

- Efficiency increases markedly with fish size.

- Efficiency increases with lower channel velocities.

- Addition of a center wall improves the efficiency, giving the fish a wall to swim along if it wishes.

- Very careful design is required to take account of the many variables, such as bypass ratios, guide walls, approach velocity, louver angle, etc. Each application would most likely require extensive model testing to define suitable design parameters, for the species of concern at the temperature anticipated.

- Individual louver misalignment did not have much effect. In fact, efficiency even improved with a deviation from the exact alignment.

- Swimming capability is related to the length of the fish.

The major disadvantages of the fixed louver system are the following:

- The shallow angle of louvers with respect to the channel flow requires a rather long line of louvers which will increase the cost of the intake.

- The louver system may not effect satisfactory removal of trash. A conventional trash rack may be required upstream and a set of conventional screens would be required downstream of the louvers for more complete trash removal. The performance of the louver may be adversely affected in streams with a heavy trash load thus possibly necessitating the use of conventional coarse trash racks upstream to remove heavy debris.

- A rather complex fish handling system may be required to safely return fish to the water source.

- Water level changes and flow variations must be kept small to permit maintenance of the required flow velocity.

In an attempt to overcome some of these limitations, additional studies were conducted at a major power station in Southern California (plant no. 0618). Of the major fish types studied, the anchovy of about 130 mm (5.2 in) in length was the most delicate. Another sensitive fish (200 mm (8.0 in) in length) was the queen fish. The strongest

and toughest fish included surf perch and croakers. A sketch of the test flume is shown in Figure III-13 and results reported in Reference 32 were as follows:

- The louver efficiency increased with flow up to 0.6 m/s (2 fps) which was considered optimum.

- The bypass design is very important. The optimum bypass velocity was determined to be 1.1 m/s (3.5 fps).

- A 2.5 cm (1") louver spacing gave good results. Increasing the louver spacing to 4.5 cm (1.75") reduced efficiency significantly.

- The louvers should have a 20° or less angle with flow direction. Increasing this angle markedly reduced louver efficiency.

- The louver system worked as well at night as during the day.

The experience gained in these tests is being used to design a new intake for a major nuclear installation (plant no. 0629). A sketch of this intake is shown in Figure III-14.

The intake employs the louver principle described above. The louvers are mounted on frames similar to the conventional water screens. Instead of the fixed louver system, the louvers are rotated in a manner similar to a traveling bar screen used in municipal wastewater treatment. A water jet system washes any material from the louvers as it passes over a standard trash trough. Behind these vertically traveling louvers is a standard vertical traveling fine screen similar to that used at most powerplant intakes. The louvered frames are so mounted that the front of the frame is flush with the walls supporting the entire mechanism so that fish may move unimpeded down the face of the louver vanes. The louver vanes serve as trash racks.

A very important element of the intake is the guide vane system upstream of the louver faces. These vanes insure that the flow does not turn before it reaches the louver.

Fish moving down the face of the louvers enter a bypass. The bypass itself has a unique fish lifting system, Figure III-15, which lifts the fish up several feet, where they can be dropped into a channel for their return to the sea. Supplementary water is also pumped into this channel.

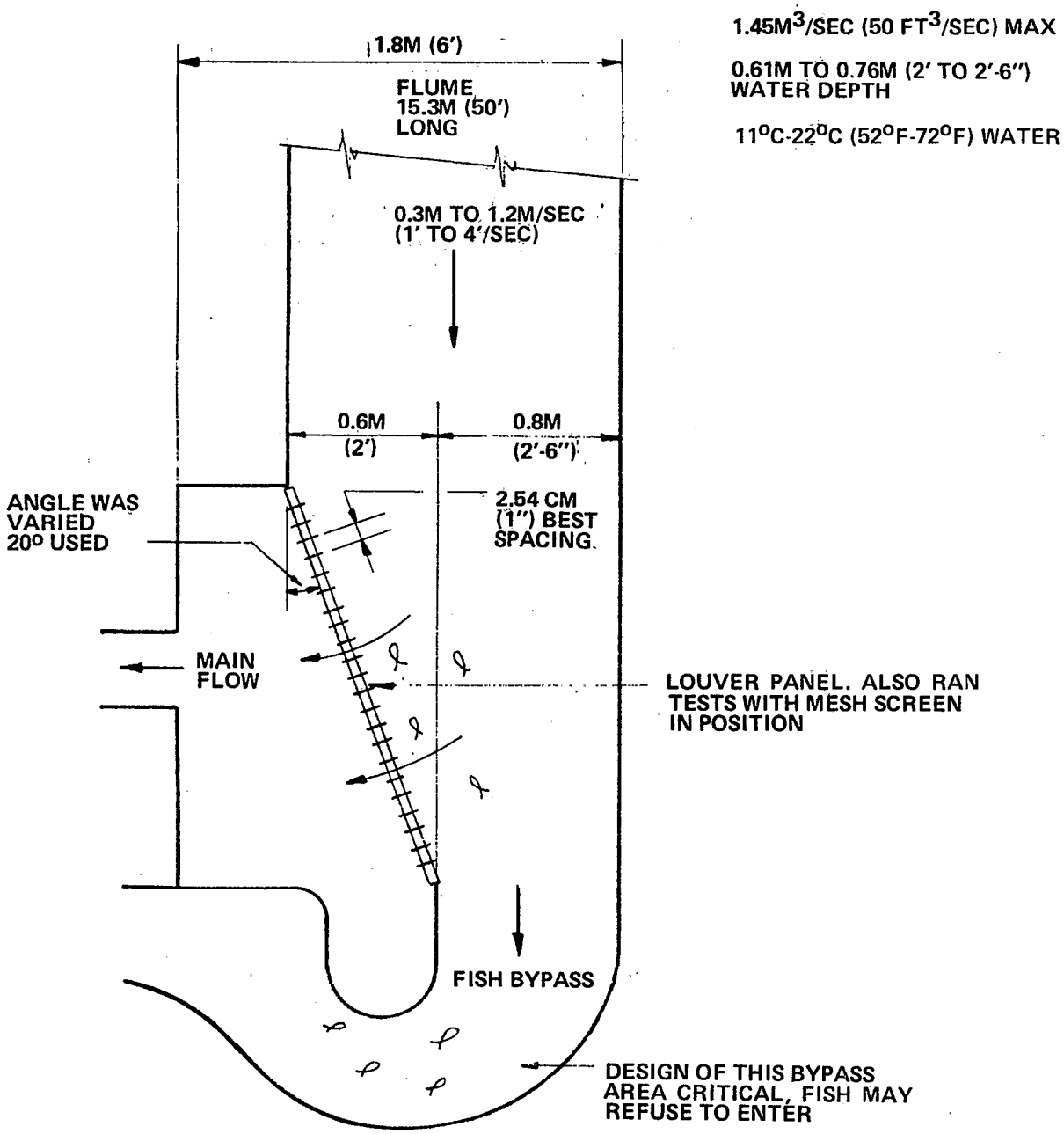

PLAN

FIGURE III-13 TEST FLUME AT PLANT NO. 0618

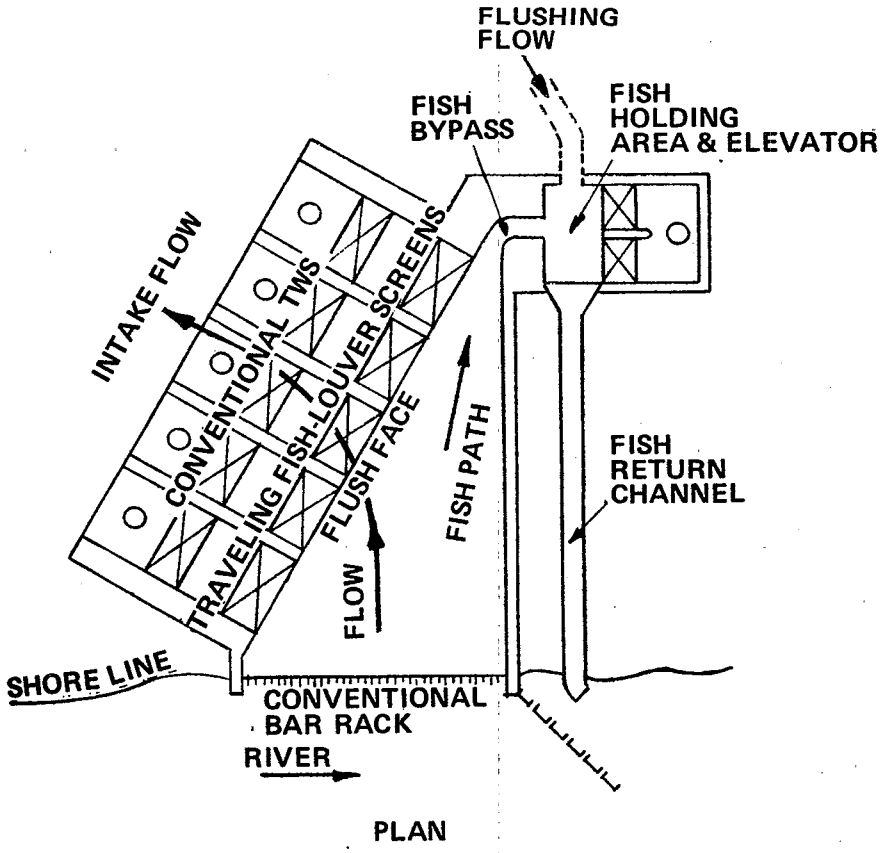

FIGURE III-14 INTAKE STRUCTURE - PLANT NO. 0629, TO DIVERT FISH BY LOUVER SCREENS AND RETURN THEM DOWNSTREAM

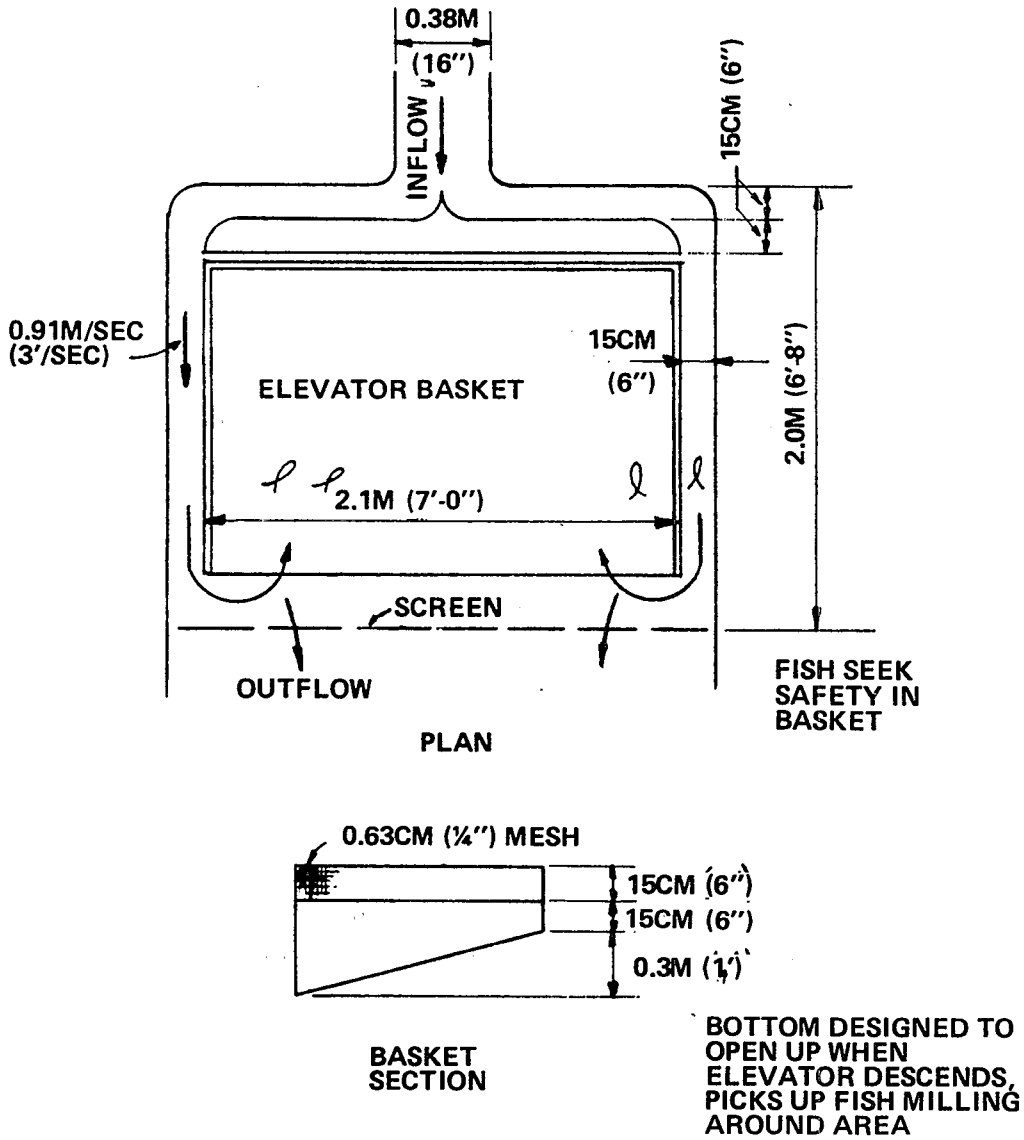

FIGURE III-15 FISH ELEVATOR FOR FISH BYPASS - PLANT NO. 0629

A substantial amount of model testing was required to develop this intake. The model work included the test flume, the test set up for the lifting basket and all its flow mechanisms, the detailed intake structure itself and the detailed bypass system.

While it will be several years before performance data on this intake will be available, its successful operation would represent a large step forward in intake design. The louver principle has been demonstrated both in model and in large prototypes and should have a significant impact on future design of intakes. The cost of installing this type of intake will be substantially higher than those of a conventional intake.

Velocity Cap Intakes

The operation of a velocity cap is shown in Figure III-16. It is based on laboratory studies which show that fish do not respond to vertical changes in direction, whereas they show a marked ability to avoid horizontal changes in velocity. By placing a cover over the top of a intake, the flow pattern entering the pipe is changed from vertical to horizontal. As shown in the illustration, the cap has a rim around its edge to prevent water sweeping around the edge and to provide more complete horizontal flow at the entrance.

Velocity caps have been used since 1958, when one was installed at a ocean-sited power station in California (plant no. 0623). Many other plants on the Pacific Coast, in the Caribbean and overseas have adopted the concept since then. Improvements have somewhat modified the design shown in Figure III-16. (Reference No. 40). One problem with the utilization of the velocity cap is that it is difficult to inspect, since it is under water. Frequently, the only sign that the cap is not working properly is an increase in fish on the screens.

Other Behavioral Systems

Other behavioral mechanisms have been experimented with in conjunction with fish diversion. These include sound barriers, light barriers and several types of fish attraction systems. The types of experiments conducted in regard to these systems have generally been more crude than those discussed earlier. Consequently, the results are generally less conclusive indicating that considerably more

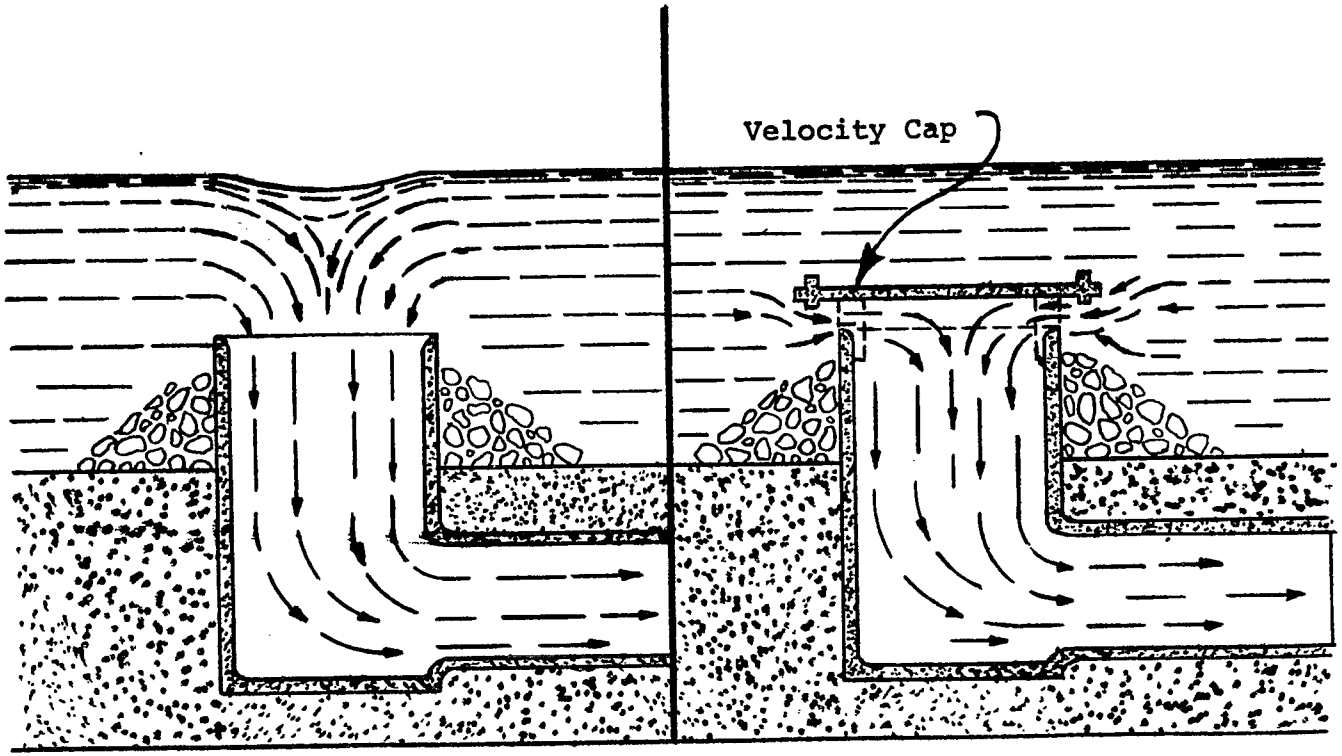

Velocity Distribution Without Cap

Velocity Distribution With Cap

OPERATION OF THE VELOCITY CAP

FIGURE III-16

formal investigation is required before these sytems can be fully evaluated.

Light Barriers

The same test flume shown in Figure III-13 and discussed in Reference 30 was also used to test a light barrier system. Upon approaching a light barrier placed across the full width of the flume for the first time during the test, the fish would mill around for 3 to 5 minutes before passing through. On subsequent trips around the flume, they would hesitate less and less until the time for each circuit was reduced to that which existed without the light source. This indicates that the fish rapidly become acclimated to light which renders such a barrier useless. Other experiments with the same apparatus using light in conjunction with a bubble curtain were also unsuccessful. It was concluded from these test that light had no effect from a practical standpoint. As far as could be determined, there are no existing intakes where a light barrier is functioning successfully. Light also has the adverse effect of attracting fish under certain circumstances and has resulted in the complete shutdown of plants.

Sound Barriers

Fish have been shown to respond to sound of high intensities and low frequencies, but become accustomed to constant sound levels. It has been shown that minnows respond to frequencies up to 6,000 Hz and catfish to 13,000 Hz or only slightly less than the 15,000 Hz band considered normal for humans. Other fish respond to frequencies up to only 1000-2000 Hz and are less sensitive to sound intensity. This high variability to sound among different species is a major drawback to this type of system.

There have been many attempts to direct fish around intakes using sound barriers. A recent installation at a major nuclear station in Virginia (plant no. 5111) employed rock and roll music broadcast at relatively high intensities under water. This type of music was selected because of its multi-frequency nature and because it is non-repetitive. The conclusion was that the system appeared to be at least partially effective. However, due to the many species and and sizes involved and the diversity of responses, it was decided to install a mechanical system to reduce the fish entrapment problem. The sound system will continue in use while the mechanical system is being installed. A

discussion of the proposed mechanical system is contained in another section of this report.

Applicability of Behavioral Screening Systems

In summary, none of the behavioral systems have demonstrated consistently high efficiencies in diverting fish away from intakes. The systems based on velocity change appear to be adequately demonstrated for particular locations and species, at least on an experimental basis. More data on the performance of large prototype systems at powerplants will be required before the louver system can be recommended for a broad class of intakes. The velocity cap intake might be considered for offshore vertical intakes since it would add relatively little to the cost of the intake and has been shown to be generally effective in reducing fish intake to these systems.

The performance of the electric screening systems and the air bubble curtains appear to be quite erratic, and the mechanisms governing their application are not fully understood at the present. These types of systems might be experimented with in an attempt to solve localized problems at existing intakes, since the costs involved in installing these systems can be relatively small.

No successful application of light or sound barriers has been identified. It appears that fish become accustomed to these stimuli, thus making these barriers the least practical of the available behavioral systems on the basis of current technology.

Physical Screening Systems

All cooling water intake systems employ a physical screening facility to remove debris that could potentially clog the condenser tubes. Such facilities range from simple stationary water screens to filter beds. This sub-section will consider only mechanical screening mechanisms. In general, these mechanical screens have been developed to protect the powerplant from debris, rather than to protect aquatic life.

In other sections intake facilities are reviewed as a whole, with further consideration of the installation and operation of some of the mechanical systems discussed here. Also reviewed in other sections is the important area of fish repulsion systems based on the behavioral characteristics of fish.

The following mechanical screening devices are the principal types which are either in common use or have been suggested for use in powerplant circulating water systems, both in the United States and abroad.

1. Conventional vertical traveling screens
2. Inclined traveling screens
3. Fixed screens
4. Perforated pipe screens
5. Double entry, single exit vertical traveling screens
6. Single entry, double exit vertical traveling screens
7. Horizontal traveling screens
8. Revolving drum screens - vertical axis
9. Revolving drum screens - horizontal axis
10. Rotating disc screens

Most of the types of revolving drum and rotating disc screens are commonly used in powerplants outside the United States and have been supplied by European manufacturers. They have not been used for thermal powerplants in the United States.

Conventional Vertical Traveling Screens

By far the most common mechanically operated screen used in U. S. powerplant intakes is the vertically-rotating, single-entry, band-type screen mounted facing the waterway. A catalogue cut of this screen is shown in Figure III-17. Figure III-18 is a schematic drawing showing the principal operating features.

The screen mechanism consists of the screen, the drive mechanism and the spray cleaning system which requires a means for disposal of the waste materials removed from the screen. The screen is attached to an endless chain belt which travels in the vertical plane between two sprockets. The screen mesh is usually supplied in individual removable panels referred to as "baskets" or "trays". A continuous band screen is also available but is not often used. The entire assembly is supported by two or four vertical steel

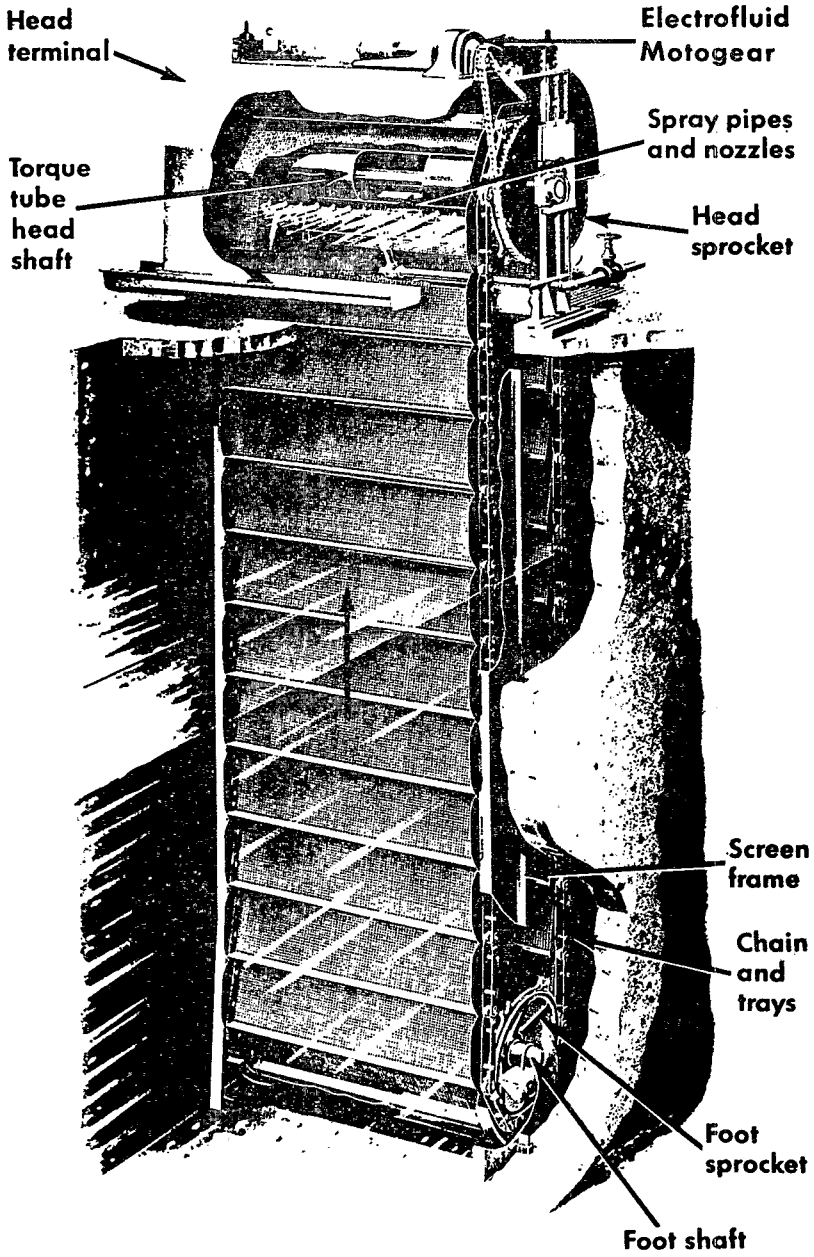

CONVENTIONAL VERTICAL TRAVELING SCREEN

Figure III-17

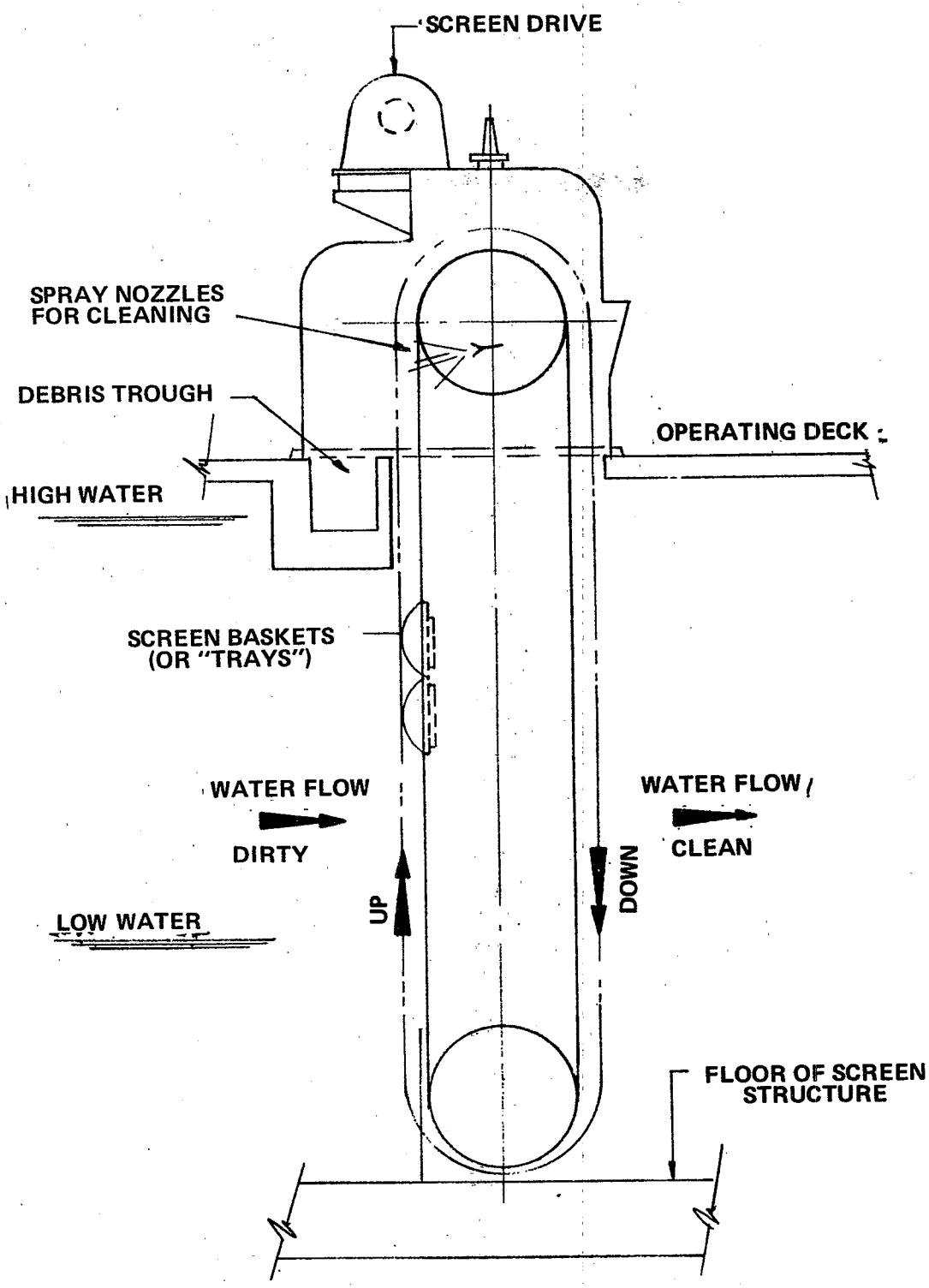

FIGURE III-18 CONVENTIONAL VERTICAL TRAVELING SCREEN

posts. Longer and wider screens usually require the stronger four post box structure for support.

The screen washing system consists of a line of spray nozzles operating at a relatively high pressure, 550 to 827 kN/sq m (80 - 120 psi). The washing system may be located at the front or the rear of the screen, or both. The usual location is in front as shown in Figure III-18. The quantity of water required for spray cleaning is on the order of 0.372 m/s (98.42 gpm) per meter (3.28') of screen width. It is supplied either by booster pumps taking suction from the circulating water pump discharge or by separate vertical shaft pumps. The disposal of the debris is usually accomplished by discharging the screen wash waters from individual screens to a common disposal trough located at the floor on which the screen is mounted. The trough drains either to a debris storage compartment or directly back to the waterway. If a debris storage compartment is used, the water is allowed to drain from the bottom of the compartment and the remaining refuse is periodically removed to a land disposal area. Both the drive shaft and the screen wash system are enclosed in a removable housing to protect the drive components and to contain the high pressure water spray.

The conventional vertical traveling screen has several advantages. It is a proven off-the shelf item and is readily available. It performs efficiently over a long service life and requires relatively little operational and maintenance attention. It is applicable to almost all water screening situations. It is available in lengths up to about 30 meters (100') and 15 cm (6") increment widths up to 4.26 meters (14'). The system adapts easily to changing water levels. The screen is relatively easy to install. Major components of the system, including supports, baskets, drive mechanisms, and spray systems are standardized. Special materials for corrosion protection and greater durability are also available.

The system as presently used has several undesirable features potentially related to adverse environment impact. The most important of these is the fact that any fish impinged on the mesh of the screen will probably be destroyed. This effect results from both the design of the system and the way it is operated. Most traveling water screens are operated intermittently, not continuously, and fish can be pinned against the screen during the extended periods of time while the screens are stationary. When the screens are rotated the fish are removed from the water and then subjected to a high pressure spray. Any fish surviving

these hazards will be destroyed in the subsequent refuse disposal operations, if the refuse is not returned to the waterway.

The above discussion suggests the following possible avenues for improving this technology to minimize adverse environmental impacts.

a. reduce impingement time by continuous operation of the screen.

b. provide a path for rapid and safe return of fish to the waterway.

c. mount the screen so as to provide fish escape passages to either side, a feature discussed in the section concerning overall intake design.

d. Place screens at an angle to flow to lead fish to a bypass system.

The current design of traveling water screens and the screen structures themselves would not require radical changes to adopt the first two of the possible corrective measures listed above. Several intake designers and screen manufacturers have proposed modifications of this type in past years and at least one major nuclear station (plant no. 5111) is modifying its screen baskets and operational procedures to provide fish protection. These modifications are discussed in a subsequent portion of this report.

Inclined Screens

Hundreds of inclined screens have been in successful operation at fisheries in Europe, the United States and Canada since the late 1940's. Most are inclined downstream away from the flow, some upstream, and a few are humpbacked with screen sloping in both directions and a small amount of water going over the top.[37]

One type shown in Figure III-19, is merely an adaptation of the conventional vertical traveling screen. It is used at installations where the debris loading is extremely heavy and is of a nature that does not readily adhere to the screen. The downstream inclination of the screen (usually 10° to vertical) allows debris falling off the lip of one basket to be caught in the following basket rather than falling back into the waterway. Also, by inclining the entire screen frame, debris being lifted from the channel is supported more fully by the ascending basket lips and the

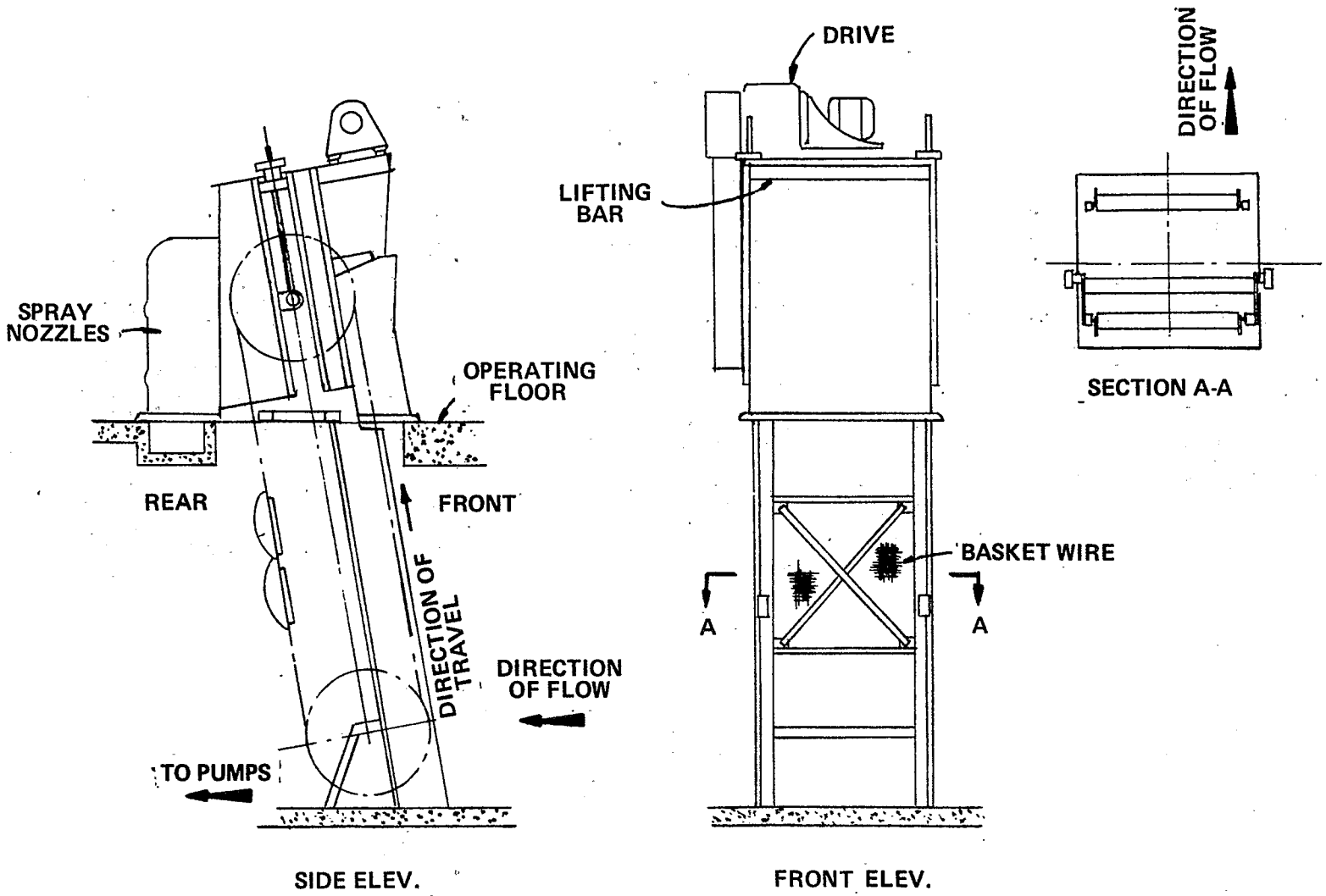

FIGURE III-19 TRAVELING WATER SCREEN

backward tilted screen wire. This type of screen thus might be advantageous in insuring more rapid removal of fish, shellfish and jellyfish from the waterway for subsequent bypass as discussed above. The number of installations using this screen is relatively small and the system has the same advantages and disadvantages as the vertical traveling screen. The cost of this screen would be slightly higher than that of the vertical screen, due to the longer screen well required, the use of two rows of spray nozzles and other minor variations from the conventional vertical screen.

Another type of inclined screen has been designed specifically with fish protection in mind and has significantly different design features than the conventional vertical traveling water screen. One variation of this type is shown on Figure III-20. There are many screens of similar design in use for irrigation diversions. This type of inclined screen is being used in the northwestern states at a number of installations. The City of Tacoma Power and Light Company and the Corps of Engineers have model tested this screen design. At the Portland General Electric Company's Pelton Dam, the screen was designed for a 7-foot fluctuation, and at the Corp's Green Peter Dam, the screen operates over a 100-foot forebay fluctuation. In both cases, the entire screen moves vertically with water surface fluctuations.[50]

Such screens are still being modified through experimentation. The screen shown in Figure III-20 has been used in Canada to divert downstream migrating fish and its performance is reported in Reference 21. This system employs a fixed screen inclined downstream at an extreme angle to the vertical. The rear portion of the screen is bent horizontally over the fish collection trough. The screen is cleaned by a continuous chain flight conveyor similar to that used in conventional water and wastewater sedimentation practice. The differences are the orientation of the collector above the screen and the conveyor flights which are made of a pliable brush material rather than solid metal. By orienting the screen and cleaning mechanism in this manner the fish can be slowly herded up the screen and kept immersed in water until it is dumped gently into the bypass trough. This design avoids many of the pitfalls of impingement on vertical traveling screens. The fish is not really impinged in the real sense of the word. It never leaves its normal habitat of water and is not subjected to the extreme pressures of the conventional system spray water.

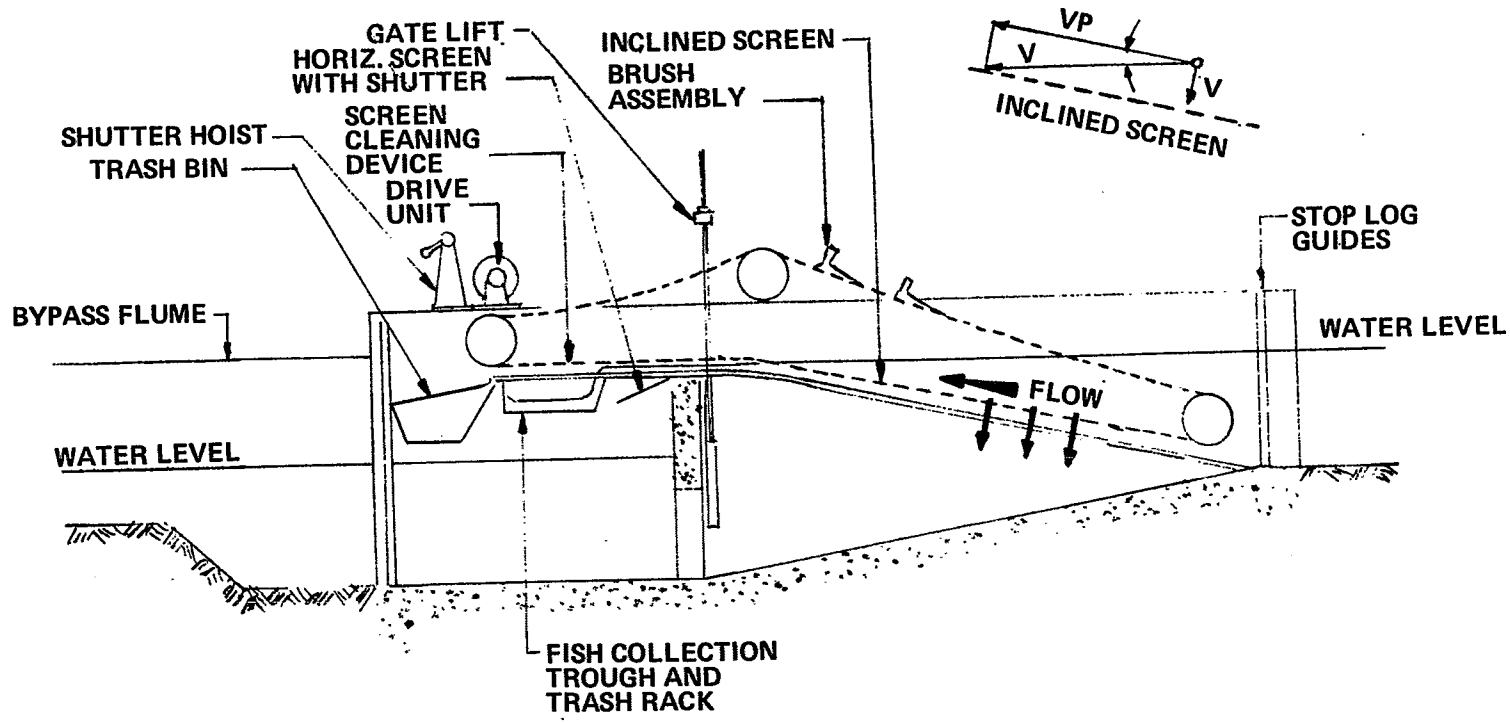

FIGURE III-20 INCLINED PLANE SCREEN WITH FISH PROTECTION

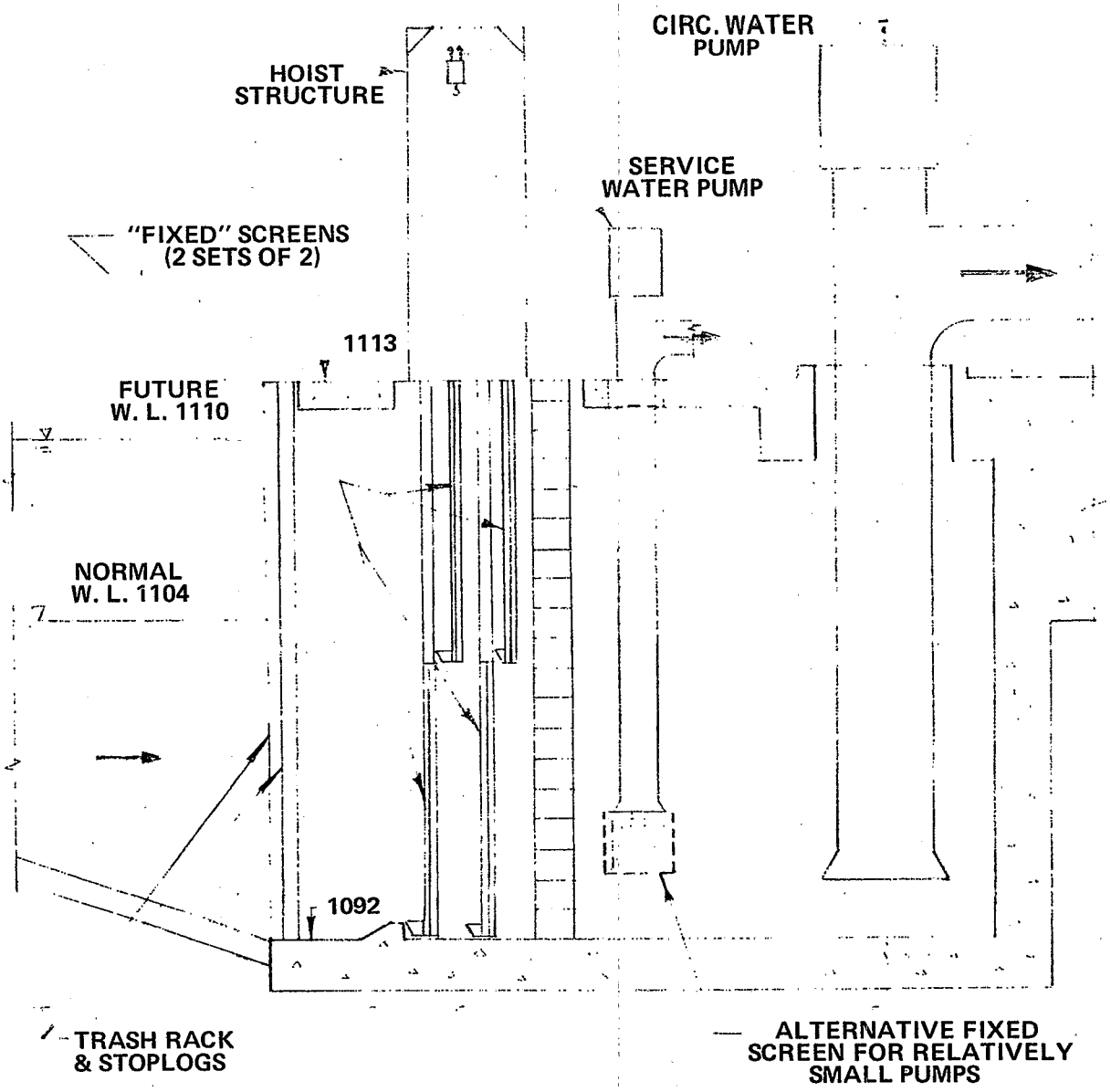

FIGURE III-2I FIXED (STATIONARY) SCREENS (SCHEMATIC ONLY)

This particular system has some important limitations. It is sensitive to fluctuations in water level, since the water level variation at the horizontal section of screen must be limited to a few inches; a level control mechanism such as the slide gate shown in Figure III-20 is thus required. Some designs have, however, provided for moving the screens up and down with the changing water level. Another disadvantage is that the overall cost of the intake structure for this type of screen could be increased. The shallow angle of placement with respect to the incoming flow causes the length of the intake channel to be several times longer than that required for the vertical traveling screen of the same screening capacity.

The application of this type of system, as well as several others to be discussed, could be limited in many areas because of the regulations of cognizant water quality control agencies. Reference here is to the possible prohibition of the subsequent discharge of debris after it has been removed from the waterway.

As can be seen from Figure III-20, the method of diverting fish to the bypass trough also allows for the discharge of the debris back to the receiving water. Debris can cause injury to fish in the bypass system, particularly if it becomes lodged or if there is excessive turbulence in the bypass flow. Prohibition of this debris discharge could also result in the prohibition of safe fish return. It is apparent that the same comment applies to the discharge from the conventional traveling screen previously discussed. In cases where it is required that fish be separated from the debris some difficulty may be encountered, since the only known technology for this would involve manual separation. Conceivably gravitational separation techniques could be employed.

The screen shown in Figure III-20 is a variation of the humpback. A similar installation of the humpback type has been in successful use at the Pelton Project on the Deschutes River in Oregon over the past 16 years. Virtually the only difference is that the Pelton "skimmer" uses a perforated stainless steel plate 5.4 m (18 ft) wide by 8.1 m (27 ft) long instead of screen and has no mechanical cleaning inasmuch as it is self cleaning except for minor filamentous algae growth in summer. Passing 200 cfs, it operates through a 2.1 m (7 ft) range of water levels with an approach velocity of 4.5 to 5.4 mps (15 to 18 fps) which assures that most fish and smaller organisms including larval forms are carried over into the bypass regardless of

resistance. It is not applicable to deep water installations.[37]

Fixed Screens

This term is applied to a number of different types of screens, some of which are permanently anchored below the waterline of intakes and others, the more common, which can be moved but are not capable of continuous travel. Taken together "fixed" screens (or "stationary" screens) constitute the second largest group of physical screening devices presently found in powerplant intakes. Examples of two types of screening systems in this category are shown in Figure III-21. Both types of screens would not be used at the same intake and are only shown on the same figure for convenience.

The first type of screen is mounted upstream of the pumps in vertical guides to allow them to be removed to a position above the water line. Figure III-21 shows a relatively sophisticated installation wherein two rows of screens are provided to permit one to remain in service while the other is being changed. In addition, each row is divided into two sections in a manner which allows removal of the lower section without removal of the upper section. Some debris and fish can be sucked into the pump during the process of changing screens. The screen guides are sometimes extended above the deck to hold the raised screens in place for cleaning. Figure III-22 is a sketch showing typical fabrication details of such a screen.

Another fixed screen type, involves a cylindrical screen attached to the pump suction bell. The cleaning of this type of screen is very difficult; it may be done by dewatering the bay, with the use of divers or by backwashing through the pump, all methods being unsuited to the continuous pump operation required at powerplants.

The bulk of fixed screens are found on smaller and older plants. Some newer plants located on water bodies that have small debris loadings have also installed this type of screen. An advantage over a conventional traveling water screen is a savings in the cost of the mechanical equipment and in maintenance costs for the screens, screen drives, spray wash pumps, etc. Operating costs may be higher if frequent manual cleaning is required. Often a fixed-screen structure will require more than twice the total screen area as a self-cleaning screen due primarily to the infrequency of cleaning the screen. Thus, cost savings over a self-cleaning screen cannot always be related to just the

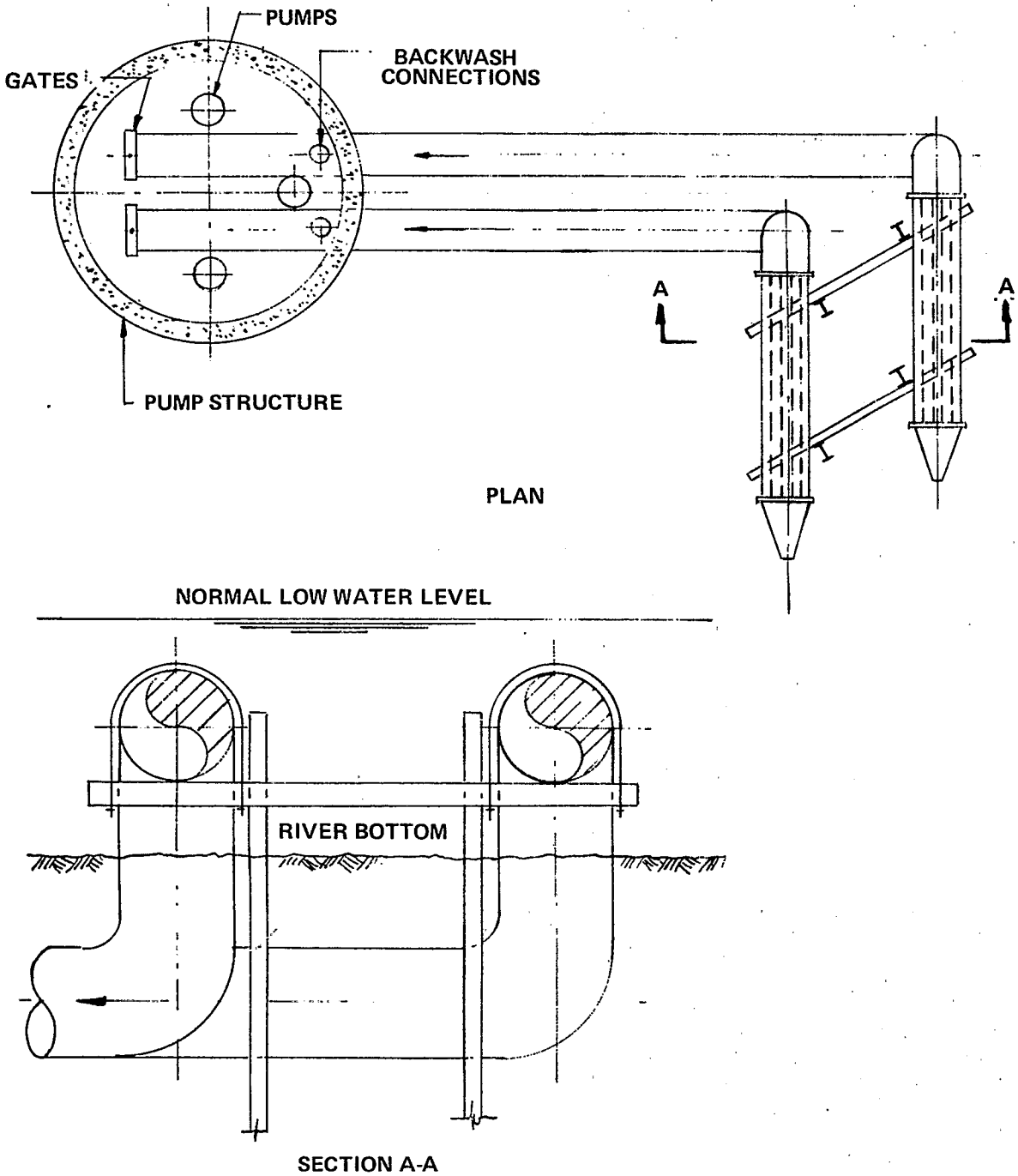

FIGURE III-22A PERFORATED PIPE SCREEN (IN RIVER CHANNEL)

perforation velocity, size and shape, all specifically to provide maximum fish protection. Additions to the inside of the pipe, such as sleeves, may be made to produce equal velocities through the perforations. Very low approach velocities can be achieved with a reasonable total length of perforated pipe, divided into several individual pipes if necessary. In this manner large quantities of water may be handled at what may be substantially less cost and greater fish protection effectiveness than presently used conventional screens.

Backwash provisions may be included as shown in Figure III-22A, but a review of existing installations has indicated that these provisions have not been extensively needed.

Other Vertical Traveling Screens

Double Entry, Single Exit Vertical Traveling Screens

Figures III-23, III-24, and III-25 show two types of installations for a vertical traveling screen which takes water from both sides and passes it out through one end of the screen, thus doubling the screening area for a given width of screen. Although this unit appears similar to the conventional traveling screen there are significant differences.

Figures III-23 and III-24 show the most common mounting of this type of screen. The unit is turned so that the approach flow is parallel to the faces of the screen. It is mounted in a concrete screen well. Water enters through both the ascending side and the descending side of the screen, thus utilizing both sides for water cleaning. For a given theoretical mesh velocity the screen will have twice the capacity of the conventional screen. There is no possibility of debris carry over to the pump side, since incomplete cleaning will simply result in returning the debris to the incoming water for recycling.

There are several drawbacks to this type of installation as outlined below:

a. The clean screen face is first introduced to the flow at the water surface. The debris picked up by the descending baskets must then be pulled down and through the boot section. Debris thus collected on the descending run blocks the screen for the entire cycle. This is in contrast to the single entry screen which presents a clean basket to the flow and usually does not

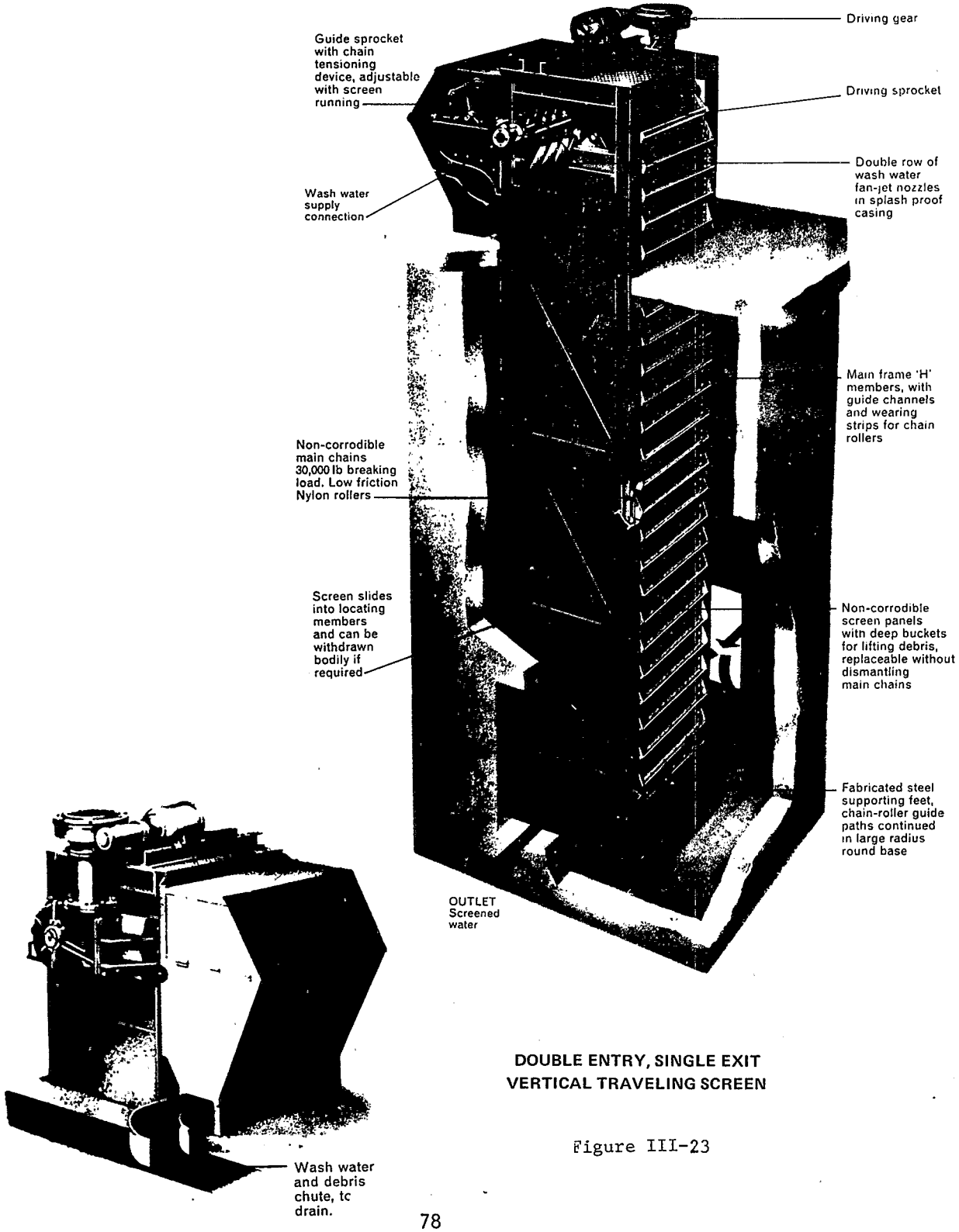

DOUBLE ENTRY, SINGLE EXIT VERTICAL TRAVELING SCREEN

Figure III-23

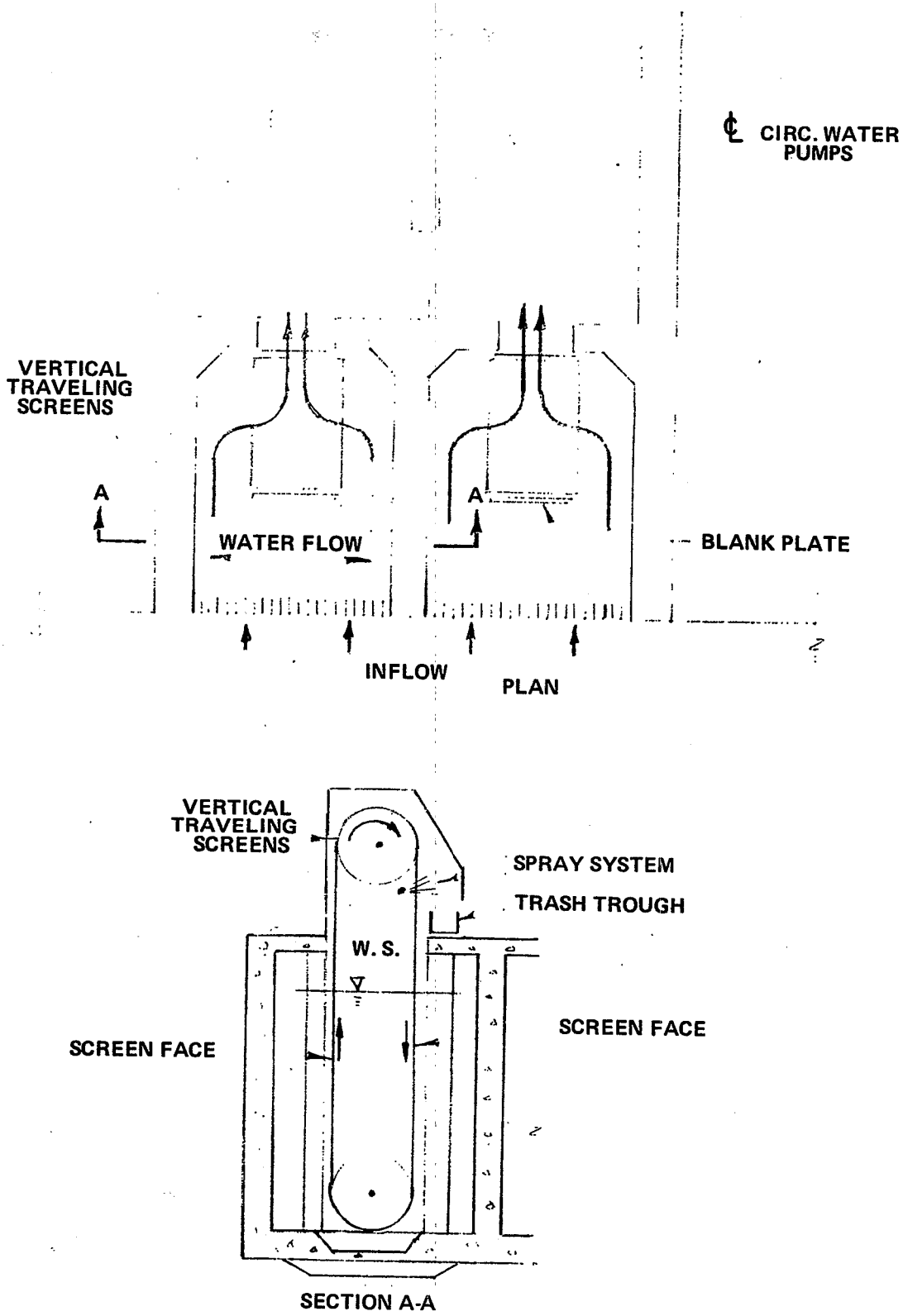

FIGURE III-24 DOUBLE ENTRY, SINGLE EXIT VERTICAL TRAVELING SCREEN (SCHEMATIC ONLY)

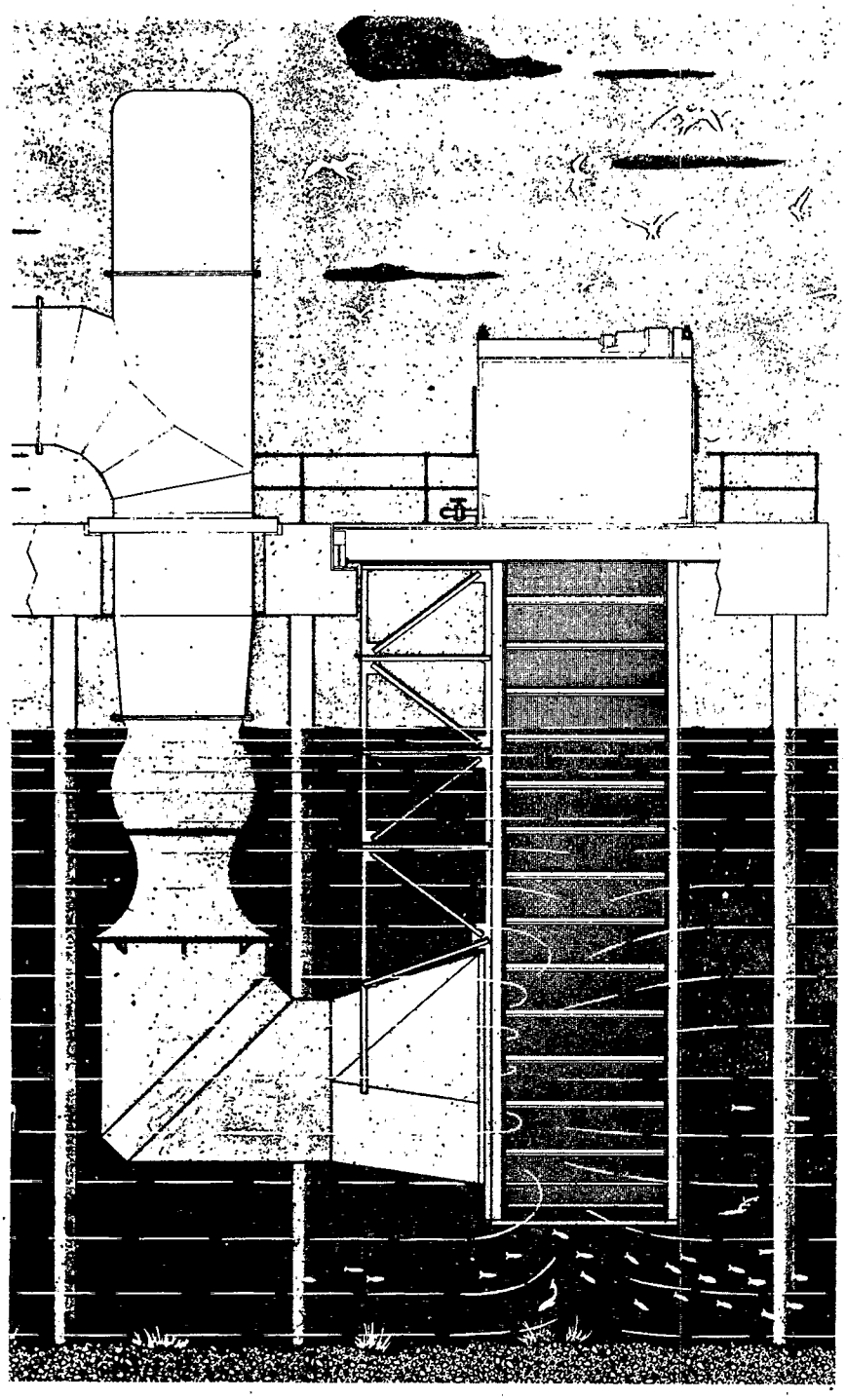

DOUBLE ENTRY SINGLE EXIT
VERTICAL TRAVELING SCREEN
OPEN WATER SETTING

Figure III-25

encounter the majority of the debris until just before it lifts out of the water.

b. Since head loss increases on an exponential basis with the degree of blockage of the screen wire, the dual flow screen will have to be designed to operate under higher head losses or a higher rate of screen travel. Higher head loss design requires both a structurally stronger screen and a higher horsepower drive.

c. The double entry screen mounted as in Figure III-22 requires abrupt changes in water flow direction as it passes through the screen. This will result in non-uniform flow across the screen face, with high localized velocities, additional system head loss and possibly enough turbulence to upset pump operation.

d. The common setting shown in Figure III-22 does not provide any escape route for fish other than to swim back out of the channel. Definite fish trap areas result at both faces of the screen.

This type of screen is frequently used outside the United States and is also offered as a standard item by one U. S. manufacturer.

Figure III-25 shows an environmentally promising alternative mounting for the double entry screen. Here the screen is mounted on a platform and is surrounded by water on all sides.

There is no confining concrete structure which might trap fish. This is potentially a major asset from the point of view of fish protection. The screen has some of the mechanical drawbacks of the mounting shown in Figures III-23 and III-24. In addition, the pump suction piping will cause non-uniform flow through the screen mesh since abrupt flow direction changes must take place to get the water to the pump. Not shown in Figure III-25 are trash racks and associated structure which will probably be needed to protect the screen from heavy debris. Even with such added facilities, however, the total cost of the screen and pump installation for the open type mounting may well be less than for an installation using either conventional traveling screens or the screens mounted as shown in Figures III-23 and III-24.

It might be noted here for reference that the principle of the open type of screen mounting typified in Figure III-25 is also a feature of one of the alternative mountings of a

European drum screen shown in Figure III-38. The pump suction piping is similarly attached to the screen frame itself, allowing open water to surround the screen, thus avoiding fish trap areas.

Single Entry, Double Exit Vertical Traveling Screens

Figures III-26 and III-27 show a screen type which reverses the flow path shown for the double entry screen previously discussed. Water enters through an opening in one side of the screen frame and exits to both the right and left through the ascending and descending screen faces. Debris is removed from the screen baskets into a trough on the inside of the screen by both gravity action and sprays. There is no possibility of carrying debris over into the "clean" side of the system. None of these European designed double exit screens is presently in operation in the United States, but they are on order for at least two major U. S. powerplants.

The advantages and disadvantages of this design are similar to those for the double entry screens previously discussed. One potential fish protection feature of the screen shown in Figure III-27 is a substantial debris, water and fish holding trough for each section of individual curved screen basket. Fish might be less likely to flip out of the trough back into the incoming water and thus would not be "recycled" in the manner which is objectionable on unmodified conventional traveling screens.

Neither this screen nor any of the other vertical traveling screens were developed with fish protection in mind. Thus they have the inherent and obvious potential environmental drawbacks which have been highlighted in the previous discussions.

Horizontal Traveling Screens

Figure III-28 shows the principle of the horizontal traveling screen, a device specifically developed to protect fish. It elicits a behavioral response from the fish similar to the louver diversion system discussed elsewhere in this report. The horizontal screen, which is still in the experimental stage, is the single major advance in mechanical screening technology in the last decade. It was initially developed by the Bureau of Commercial Fisheries, now the National Marine Fisheries Service. Later financial

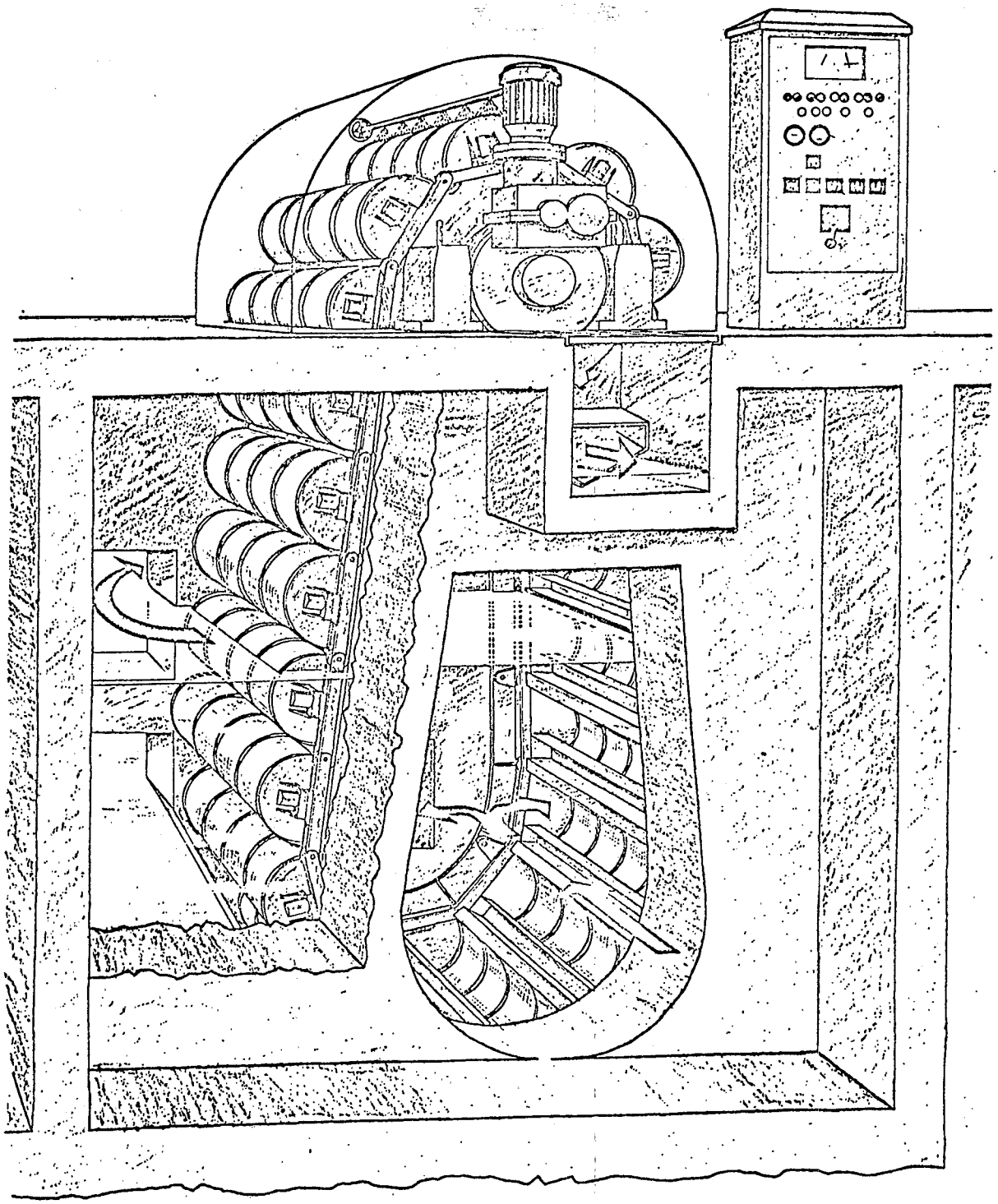

SINGLE ENTRY, DOUBLE EXIT
VERTICAL TRAVELING SCREEN

FIGURE III-26

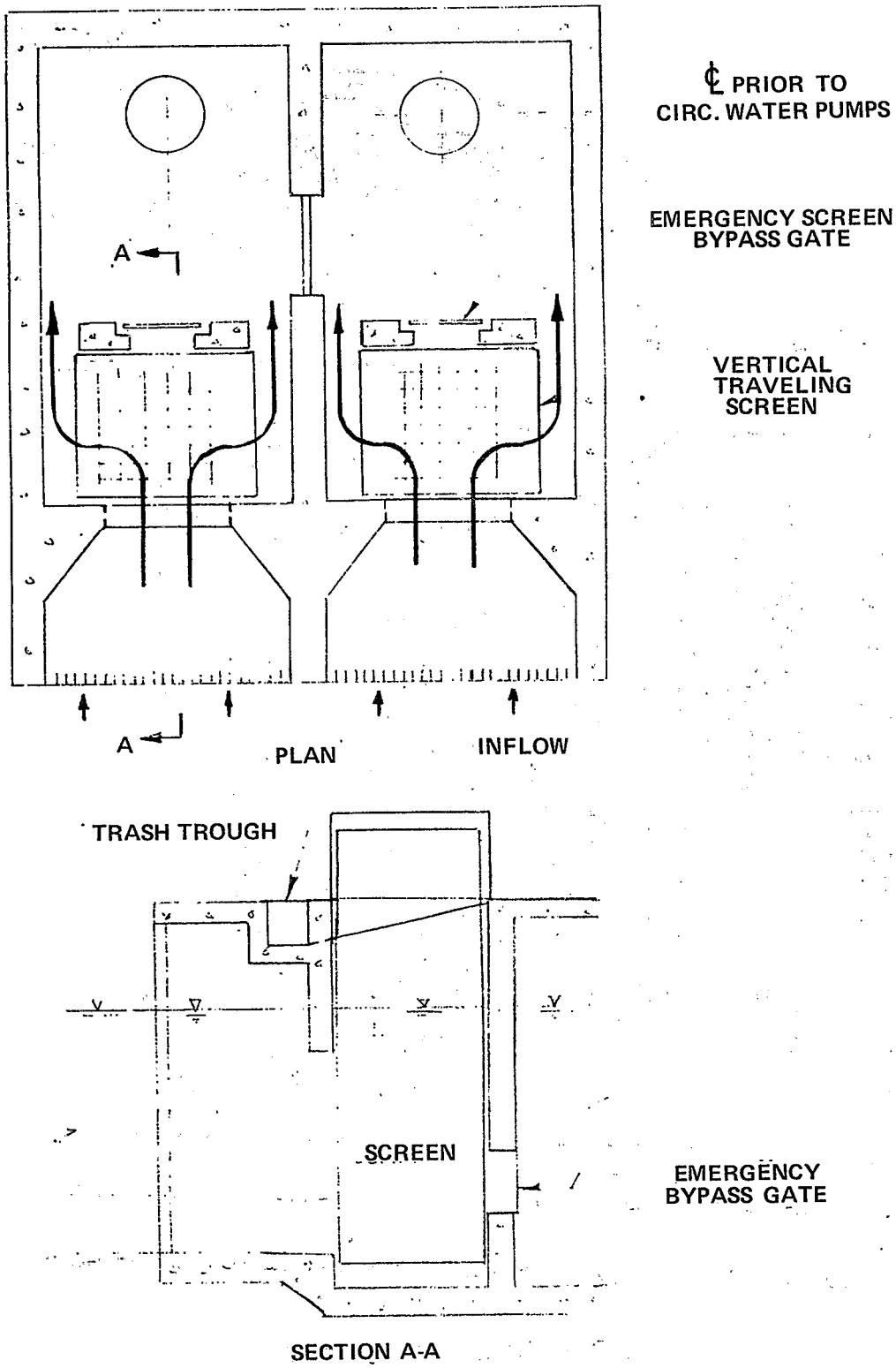

FIGURE III-27 SINGLE ENTRY, DOUBLE EXIT VERTICAL TRAVELING SCREEN

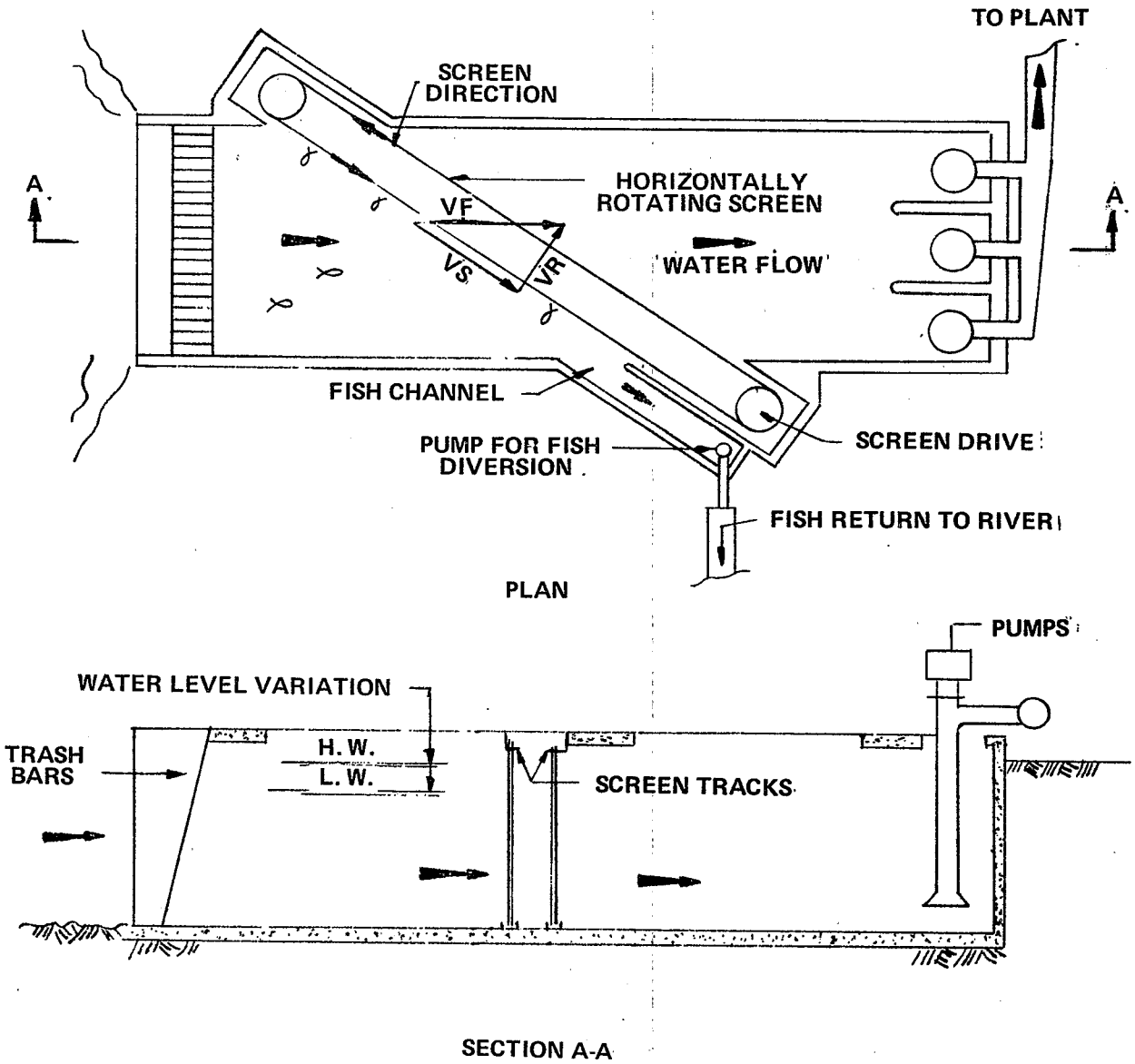

FIGURE III-28 HORIZONTAL TRAVELING SCREEN (SCHEMATIC ONLY)

and technical support has come from several utilities and a commercial screen manufacturer.

As shown schematically in Figure III-28, the horizontal traveling screen rotates horizontally at a sharp angle to the incoming water flow. The principle is to guide fish to a point where a bypass channel can carry them to safety. It has been very effective. Upon sensing the screen, a fish will orient perpendicular to the screen and attempt to swim away from it in a direction opposite to the vector VR. This he is able to do since the component of the channel velocity opposing his effort (VR) is small. In this orientation the fish is swept downstream along the face of the screen by the component of channel velocity which is parallel to the screen (VS). When the fish reaches the end of the screening leg it moves into the bypass channel for safe passage back to the waterway. The size of fish that is effectively screened can be reduced by reducing the angle of inclination of the screen with respect to the channel flow direction, which increases the total screening area. However, as this angle is reduced the size of the screen increases for the same flow rate, increasing the cost of the intake. Some small percentage of fish will become impinged on the screen, but they will be released at the bypass and may also not be pressed as tightly against the screen as they would be in a vertical screen depending on the dynamic head against each type of screen.

The latest experimental version of this screen (designated Mark VII) is shown schematically in Figure III-29. It is located on the Grande-Ronde River near Troy, Oregon and was designed in cooperation with a major commercial screen manufacturer. Although this screen and its predecessors have undergone extensive tests, the manufacturer and knowledgeable intake designers estimate that it is at least two generations of experimentation away from installation at a major steam electric powerplant. Application of this screen to a large industrial intake at this time would require extensive and costly research.

Some of the problems are as follows:

a. The screens operate continuously and at very high rates of speed compared with vertical screens. For the Mark VII screen the rate of travel is variable from 0.4 to 1.2 m/s (80 - 240 fpm) as compared with a usual maximum of 0.05 m/s (10 fpm) for the vertical screen. All components of the mechanism are thus subject to severe wear. Reliable, long life components have not been developed.

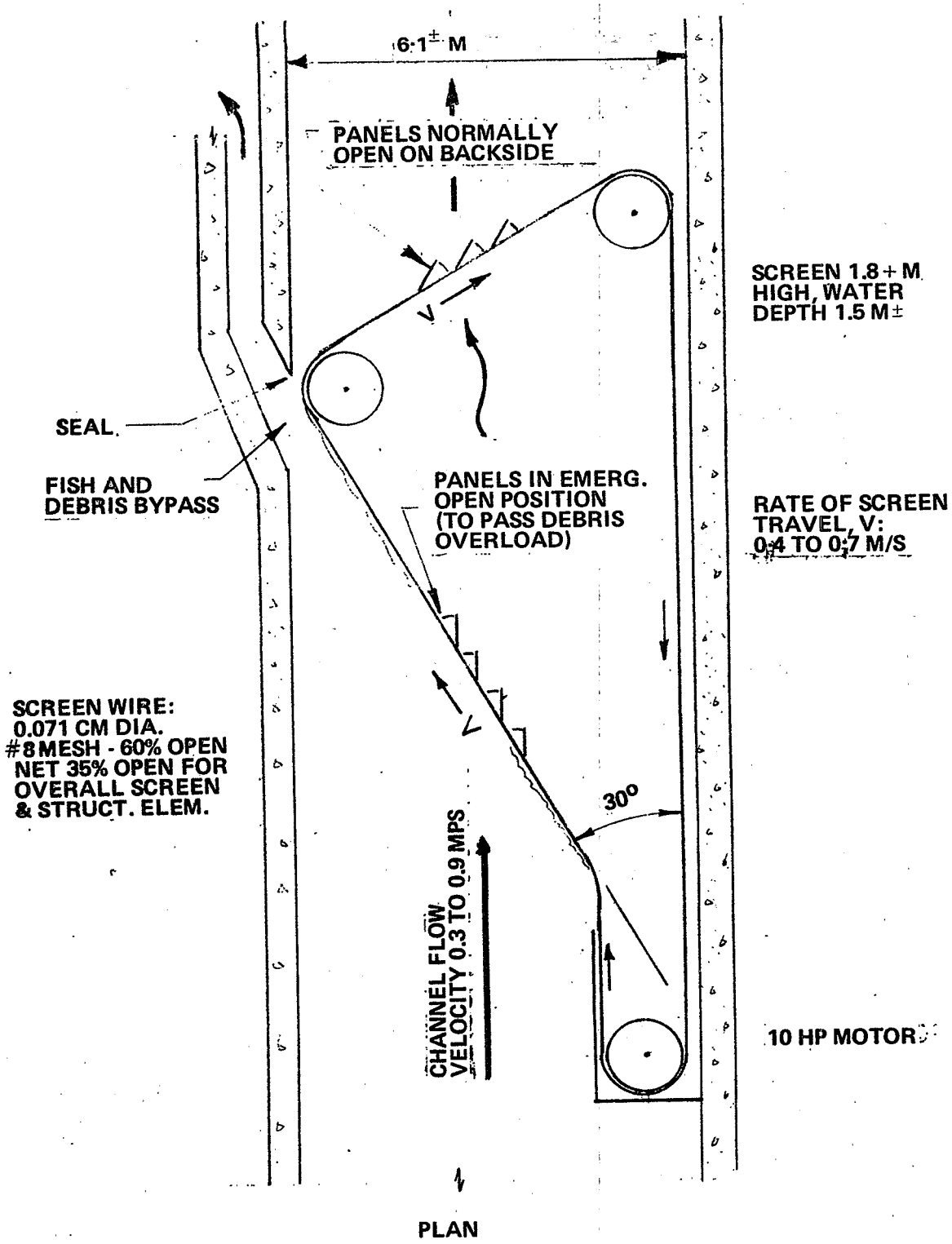

FIGURE III-29 MARK VII HORIZONTAL TRAVELING SCREEN (SCHEMATIC ONLY)

b. Water level differential due to clogging must be limited to avoid collapse of the screen. Either the pumps must be tripped to stop flow or the screen panels must be designed to spring open. This latter solution was used in the Mark VII screen. If the panels thus open they will release fish and debris and supplementary conventional traveling screens will be required downstream of the horizontal screens to protect the cooling water system.

c. The horizontal screen cannot accommodate significant variations in water depth in its present stage of design. Effective performance hinges on suitable approach water velocities.

d. The maximum screen panel height is about 4.3 meters (14 feet) due to the same general structural limitations that control the maximum width of a vertical traveling screen.

e. Due to the lack of a velocity gradient in the incoming water screen, it is difficult to obtain sufficient bypass velocity without the use of supplementary pumps in the bypass system.

f. Debris as well as fish must be handled on the bypass system, thus required additional water cleaning facilities.

g. Screens would have to be redundant to permit continuous full load operation during screen maintenance shutdowns. The size of the installation will thus become very large and costly compared with a vertical screen facility.

h. Debris and bed load tend to jam lower tracks.

Figure III-30 is a schematic version of a possible variation of the horizontal screen setting. This location and orientation would utilize the velocity of the passing water to carry the fish to safety and remove trash.

The principle of angling the water cleaning facilities to the incoming flow is further developed in other sections, with respect to the louver system of behavioral guidance and the concept of placing conventional traveling screens at an angle to the flow.

Revolving Drum Screens

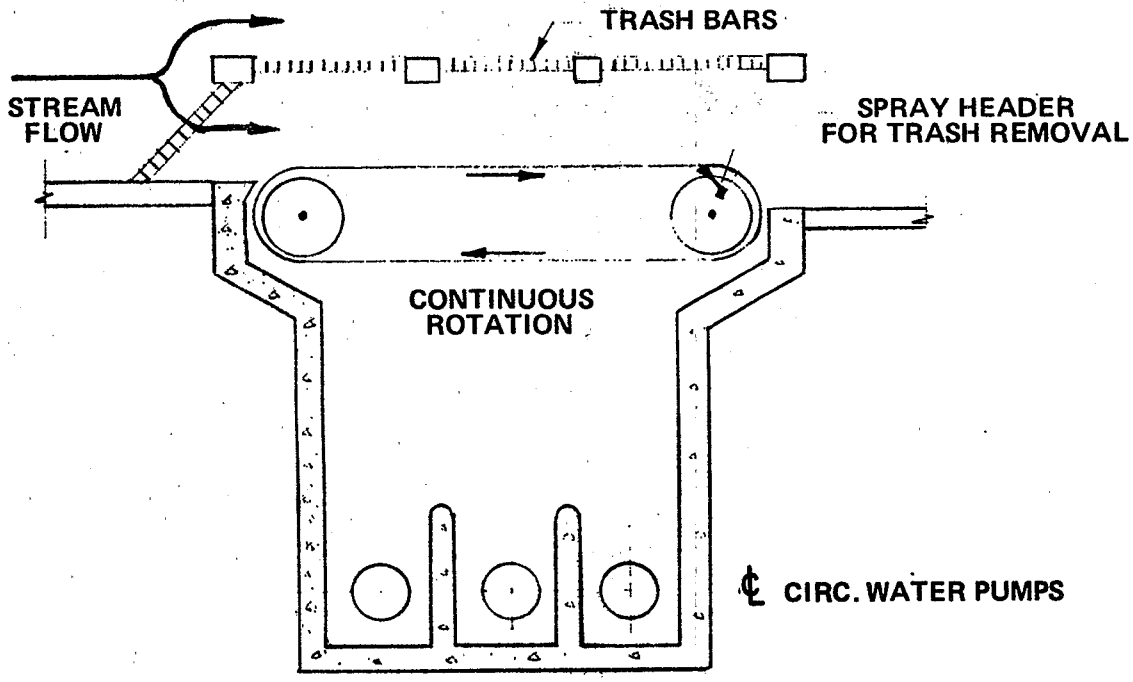

FIGURE III-30 SCHEMATIC PLAN ADAPTATION OF HORIZONTAL TRAVELING SCREEN

Revolving Drum Screens - Vertical Axis

At least two types of vertical axis revolving drum screens are in use in U. S. water intakes, but not in facilities connected with industrial cooling water systems. The California Fish and Game Department has had in operation for several years a revolving drum screen-vertical axis equipped with a fish and trash bypass systems for an irrigation diversion.[50]

a. The vertical drum revolving in an opening in front of the pumps is shown schematically in Figure III-31.

b. The vertical drum revolving around the pump itself is shown in Figure III-32.

The screen mesh is placed on a vertically revolving drum. Water level variations can be handled without difficulty. A vertical jet spray system can be mounted inside the drum to wash off debris. However, no convenient way has been developed to move the debris away from the screen face area.

Figure III-31 shows the drums lined up in such a manner that a passing river flow will carry away debris and would also carry fish to safety. Obviously the reliable performance of this system will depend on a strong unidirectional passing current, which is a feature severely limiting the number of locations where the screen would be effective. Without such passing flow the debris would simply pile up in front of the screens. Fish would be scraped or jetted off only to possibly impinge again on the same or adjacent screens.

Figure III-32 shows the screening element encircling the pump and revolving around the pump. One major screen manufacturer has supplied such screens for relatively small, 0.19 cu m/s (3,000 gpm), powerplant auxiliary pumps. Another version has been independently developed and used for an irrigation water intake by the Prior Land Company of Pasco, Washington. Although this system is experimental and has been in operation for only about a year it has served Prior Land's special needs. The system has had mechanical difficulties, however, and has required major overhaul during the non-irrigation season. Modifications and new designs are underway. A vertical spray washing system has been installed, but no satisfactory provisions have been made to carry the debris away once it has been washed from the face of the screen.

The screen enveloping the pump must be large in diameter compared with the bell in order to achieve an acceptable low

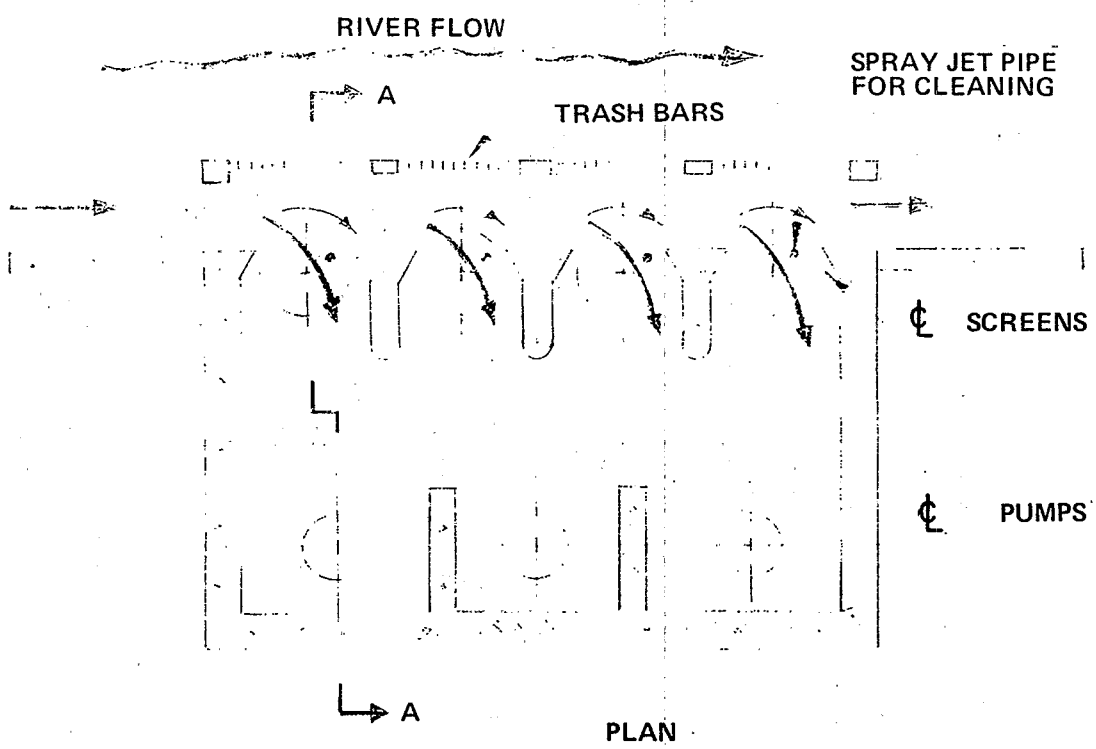

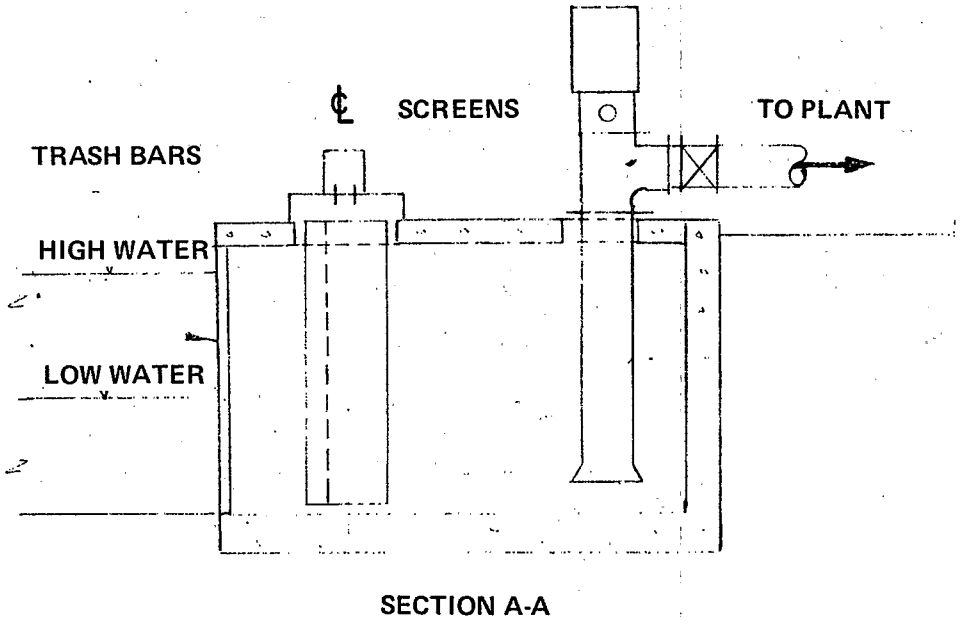

FIGURE III-31 REVOLVING DRUM SCREEN - VERTICAL AXIS SCHEMATIC

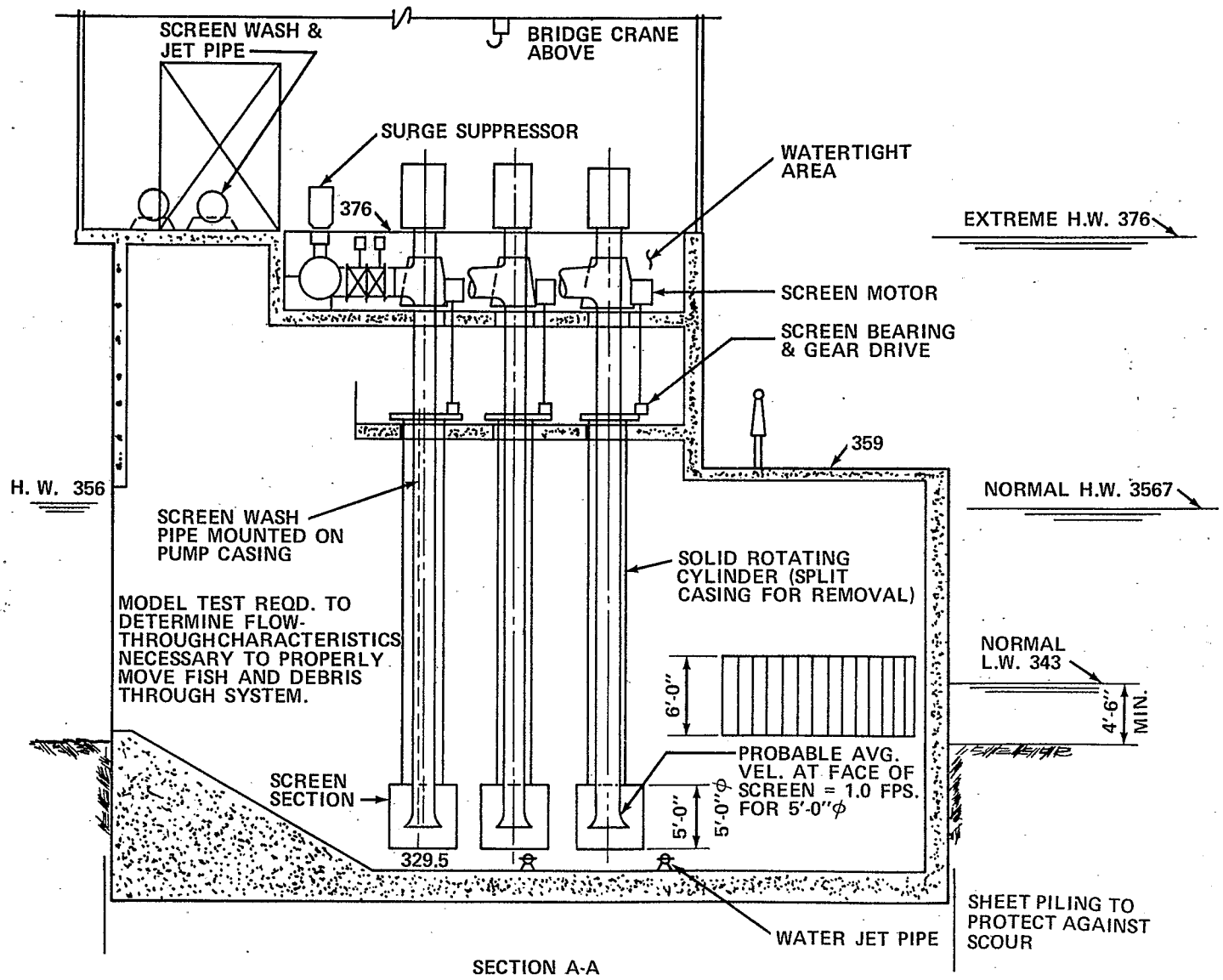

FIGURE III-32 VERTICAL AXIS REVOLVING DRUM SCREEN

screen velocity. Only a small vertical section of the screen will be effective since the flow lines into the pump bell traverse only a limited area of the surrounding waterway.

The vertical drum screens described here are not sufficiently developed to assure protection to fish and appear to be of marginal effectiveness in handling any but very light debris loads.

Revolving Drum Screens - Horizontal Axis

Horizontal axis revolving drum screens are widely used throughout the world. There are many variations functioning in quite different ways. In the United States, however, they have had practically no application and are not supplied as a standard design for the water quantities required in powerplants. The reason revolving drum screens - horizontal axis, have not been used with cooling water intakes in the U.S. appears to be that previously, the main concern has been with the need to remove debris from the water for protection of the plant. For the majority of drum screens, the National Marine Fisheries Service has found that the flow through the screen is adequate to remove all debris on the downstream side of the screen. If used in this manner, the plant could require additional trash removal equipment downstream of the screen.[50]

A simple drum installation is shown in Figure III-33. This type of screen is placed with its longitudinal axis horizontal across the intake channel. The screening media is located on the periphery of the cylinder. The screen rotates slowly with its exposed upper surface moving downstream (intake flow) just below the water surface. Because it operates in this manner it can be used to separate fish from the water flow with minimum impingement, if mesh approach velocities are low. Debris is not removed efficiently.

The important design parameters for the drum screen are mesh size, drum diameter, drum rotation velocity, and velocities through the screen. The velocities through the screen are difficult to control since portions of the screen are alternately moving with and against the intake flow, although in the usual case of low drum speed this effect would be minor. The horizontal drum screen as shown is also sensitive to water level changes.

Drum Screens - General

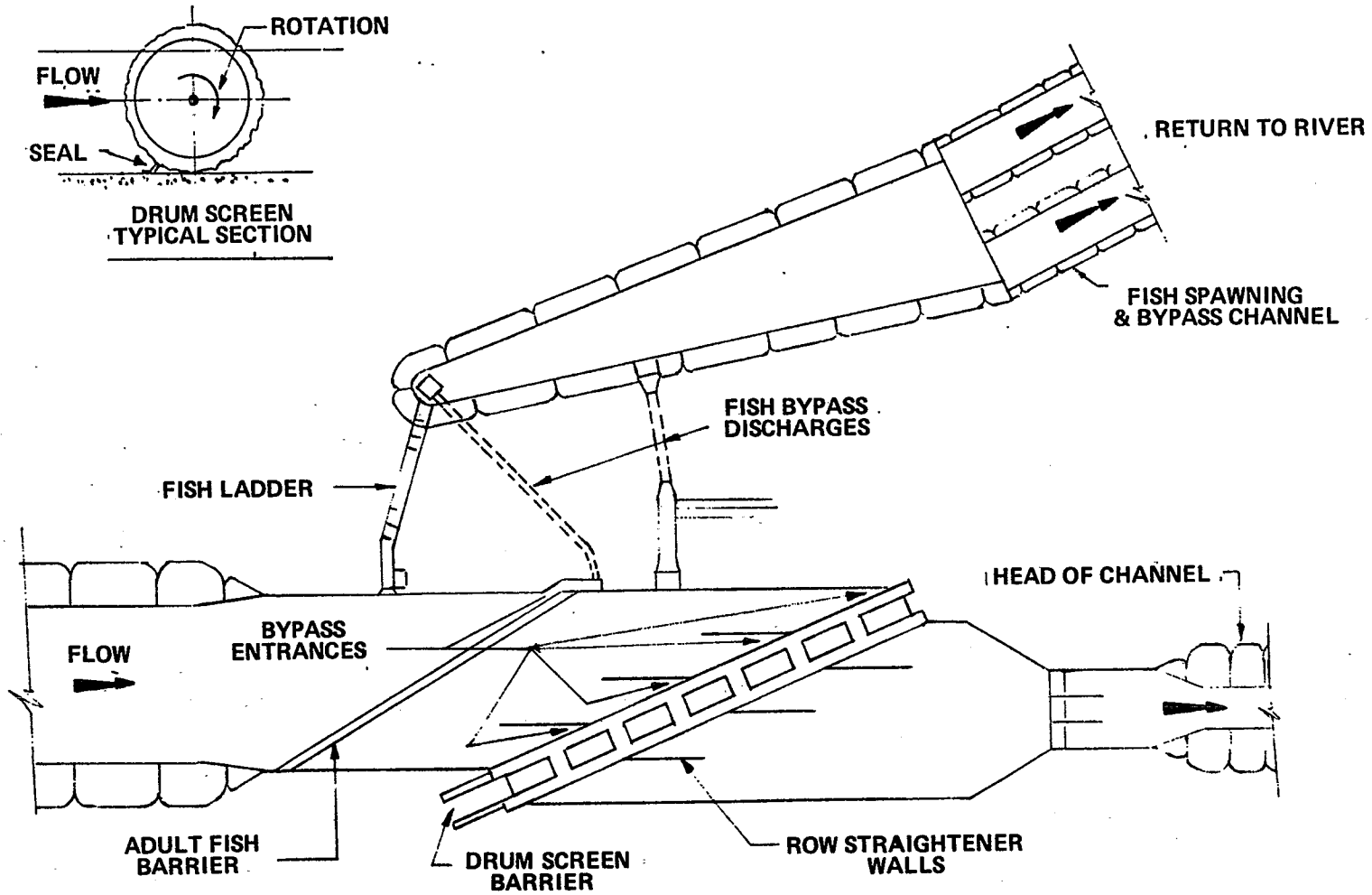

FIGURE III-34 FISH BYPASS STRUCTURE

water screening has not been given much attention. The following types are readily available and often used:

a. Figure III-35, single entry cup screen, where the water enters at the end (side) of a large rotating drum and passes out through screen mesh on the periphery. It is limited in size to about 9 m (30') in diameter because of the cantilever nature of the shaft support.

b. Figures III-36 and III-37, double entry cup screen, where the water enters the rotating drum from both ends (sides) and passes out through the mesh on the periphery. These screens have been made as large as 18.3 m (60') in diameter. Efforts have been made to provide oversize debris lifting buckets to carry fish in water up to the debris removal system and trough at the top of the drum travel.

c. Figure III-38, a double entry drum screen where the screen mesh covers the ends (sides) of the drum and the periphery is closed. Water enters the sides and also leaves one side through a pipe around which the drum rotates. This screen rests on piers without a surrounding concrete structure, a mounting which permits water flow around all sides and which thus provides escape routes for fish. In this respect the setting is similar to the double entry vertical traveling screen offered by a U. S. manufacturer and shown in Figure III-25. Screens of this type cannot be cleaned efficiently because of the tendency for the debris to fall back into the raw water as the screen rises.

The structure required to mount drum or cup screens is substantially larger and more costly than the vertical traveling screen structure designed to handle the same quantity of water under the same conditions. They are reputed to be easier to maintain (the horizontal shaft is located above normal water level), there are fewer mechanical parts and there is no possibility of carryover of debris into the circulating water system.

Rotating Disc Screen

Figure III-39 shows a typical rotating disc screen, a type which is suitable only for relatively small flows and small water level variations. The screen mesh covers a flat disc set at right angles to the water channel. The disc rotates around a horizontal axis, bringing the dirty screen face above water where high pressure sprays wash the debris into

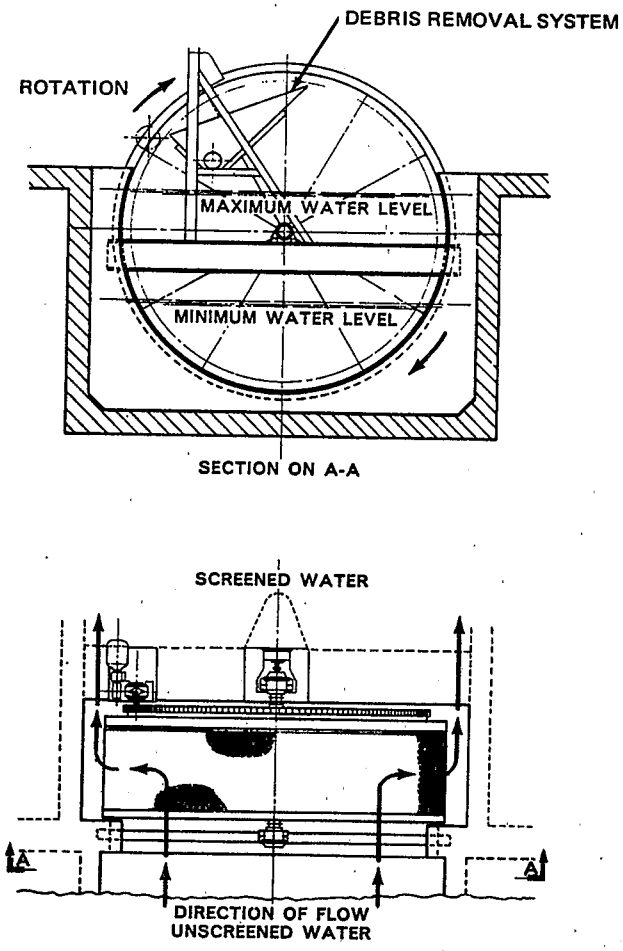

SINGLE ENTRY CUP SCREEN

Figure III-35

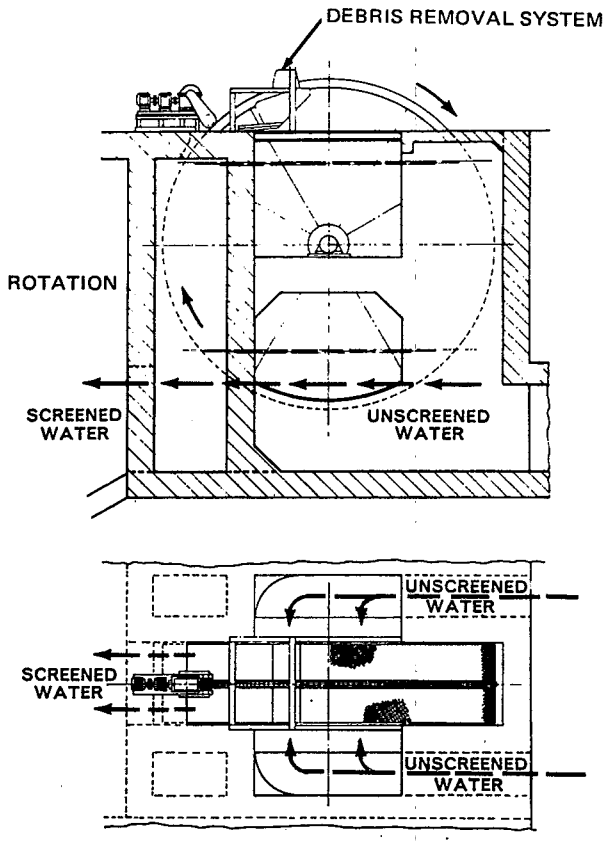

DOUBLE ENTRY CUP SCREEN

Figure III-36

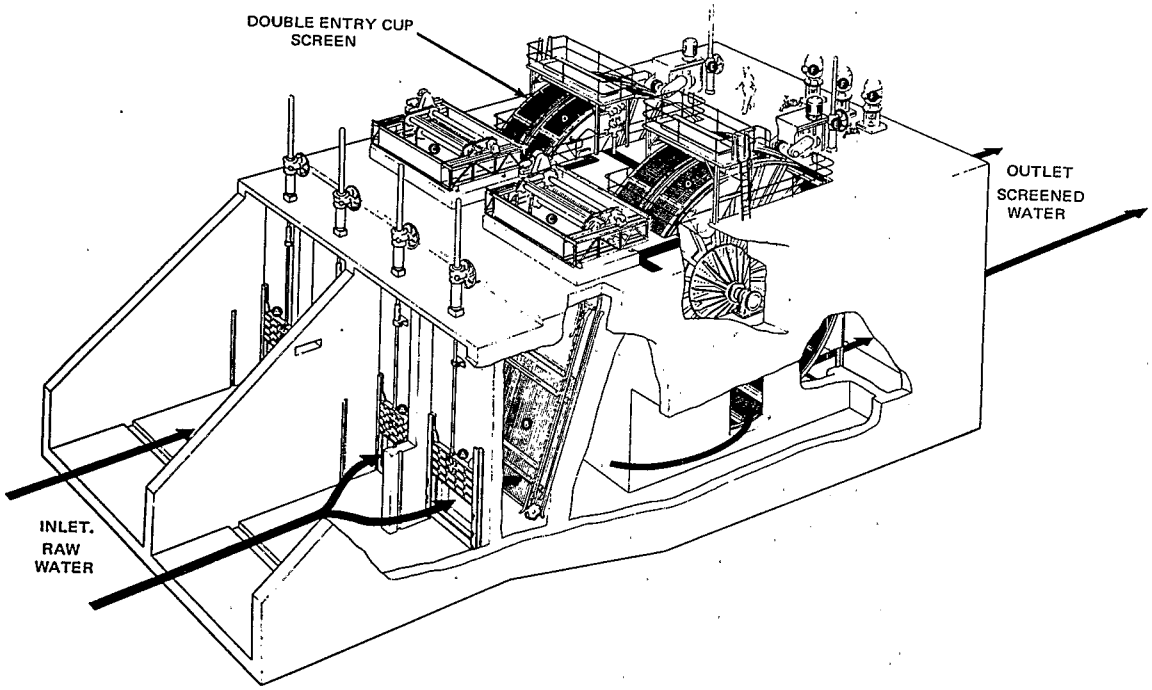

SCREEN STRUCTURE WITH
DOUBLE ENTRY CUP SCREENS

Figure III-37

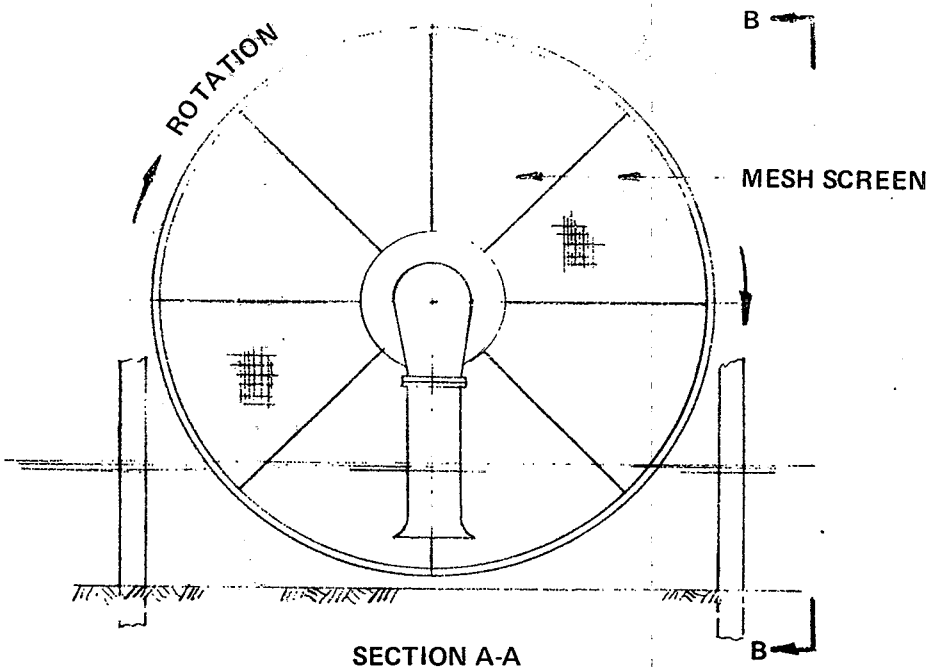

SECTION A-A

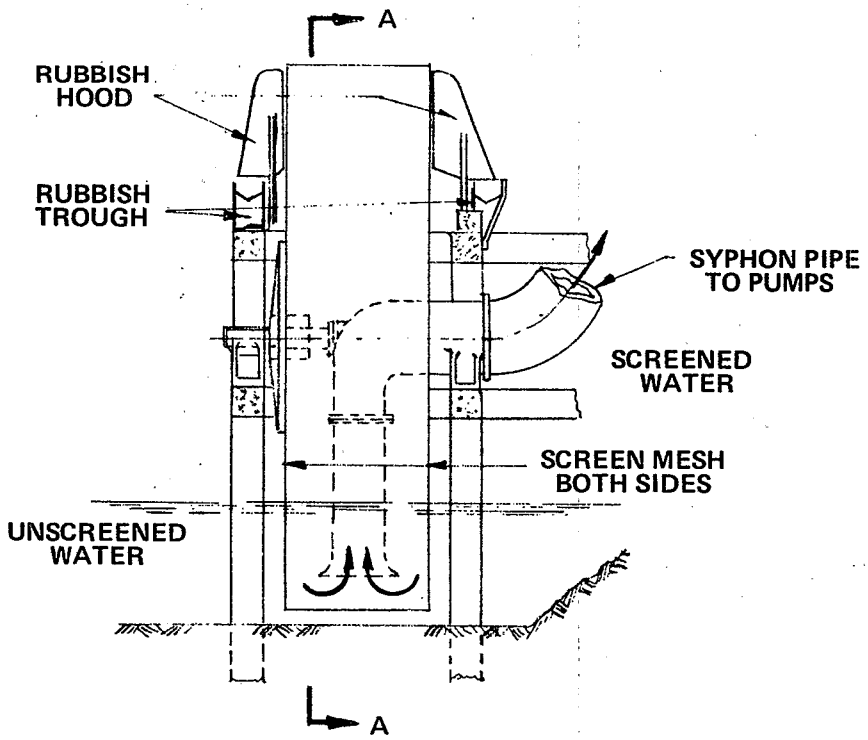

ELEVATION B-B

FIGURE III-38 DOUBLE ENTRY DRUM SCREEN OPEN WATER SETTING

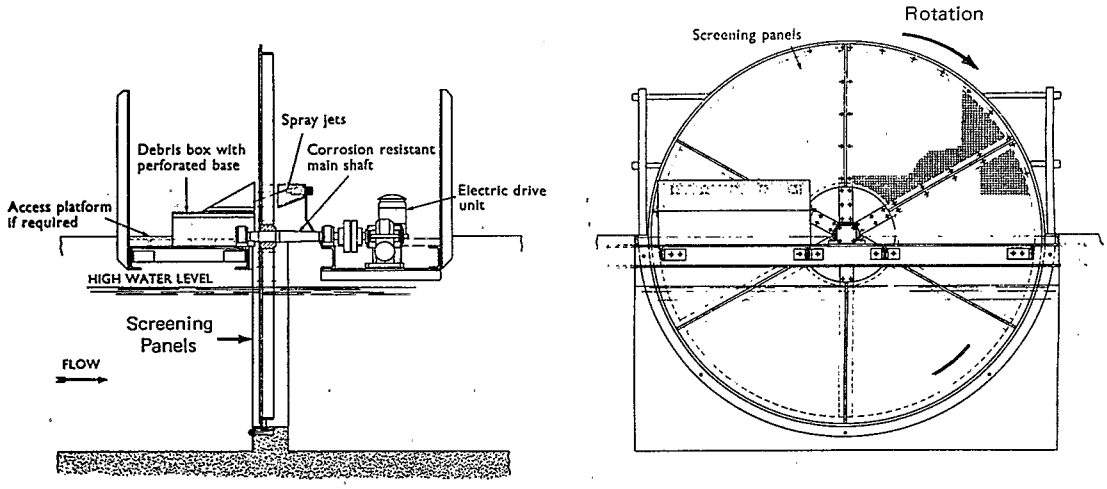

ROTATING DISK SCREEN
BASIC ELEMENTS

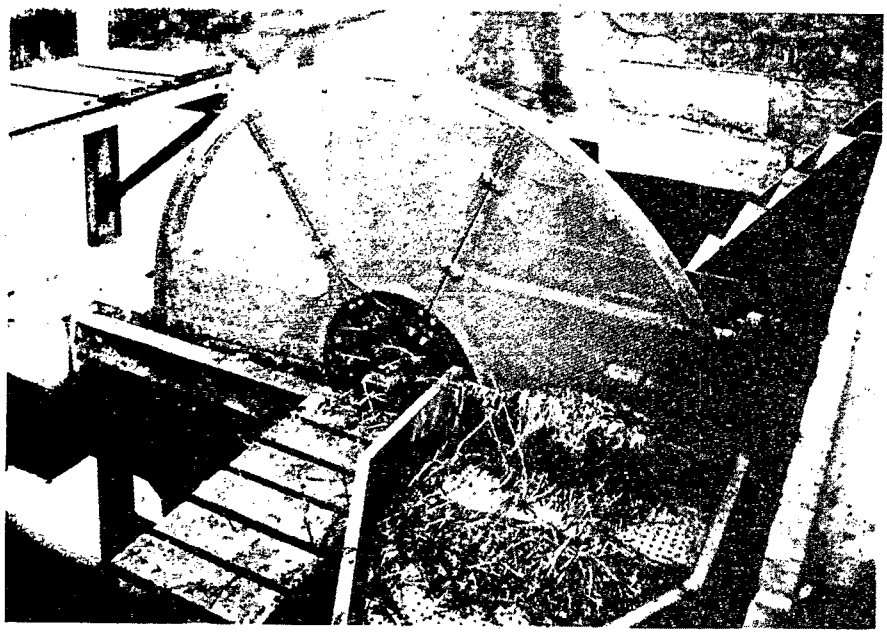

ROTATING DISK SCREEN
IN OPERATION

Figure III-39

a trough similar to that used for conventional traveling screens. It has a minimum number of moving parts and is thus inexpensive to buy and maintain. The circular screen shape makes relatively inefficient use of available area of the incoming water channel. No more than about 35% of the total screen face is being used at any one time.

Such a screen has no general advantage over other common screens from the fish protection point of view. It also has most of the drawbacks, including probability of fish impingement, the need for high pressure sprays to remove fish and debris and the need for a very large screen structure to limit screen approach velocities to those now being considered for fish survival.

Miscellaneous Mechanical Screens

Water treatment plants, sewage disposal facilities and various industries requiring service water employ many other configurations of mechanical screens, strainers and filters. Many are designed for much smaller water flows than are required for powerplant circulating water systems. As with most of the screens described in this section they were designed specifically to produce screened water, not to protect fish.

Fish Handling and Bypass Facilities

In addition to the screening device, other types of systems can influence the design of intake structures. The need for fish bypass systems in conjunction with some of the screening systems has been discussed in previous sections. Fish handling and bypass equipment can also be used to return viable impinged fish back to the waterway. Relatively little work has been done on developing these facilities for incorporation into existing industrial intakes. Most of these types of facilities have been installed at irrigation diversions operated by the U. S. Bureau of Reclamation and the States of California, Oregon, Washington and Idaho.[50] A great deal of work has been done in the Pacific Northwest in diverting salmon around hydroelectric impoundments.

Fish bypass and handling facilities of interest include the following:

- fish pumps

- fish elevators
- crowding devices
- bypass conduit
- modifications to vertical traveling screens

Fish Pumps

Fish pumps have been used for many years. The rotary type of pump with open or bladeless impellers seem to cause the least amount of damage to fish. However, all rotary pumps are not necessarily suitable for pumping all types of fish.. The use of hydraulic eductor pumps was thought to be ideal for fish pumping. However, fish passing through such eductors encounter high velocity jets and are evidently more frequently injured by such encounters than they are by passage through mechanical pumps [13]. Reference 47 reports high mortalities and unsatisfactory performance from eductor pumps.

Fish Elevators and Crowding Devices

Several types of bucket elevators have been tested in elevating fish on a batch rather than a continuous basis. One such system was tested at the Tracey Pumping Station by the National Marine Fisheries Service in conjunction with the horizontal traveling screen. This system is shown in Figure III-40. The fish are first concentrated over the lower bucket by use of a crowding device and then raised and dumped into the fish trough for bypass. This type of system might be quite useful at intakes where fish might congregate in quiescent zones created by such things as curtain walls and other intrusions into the screen channel.

A recently patented (U.S. Patent No. 3,820,342) fish ejector system is planned for incorporation in the new generating units at the San Onofre nuclear powerplant (unit 2 and unit 3), a coastal installation. The system has been tested at the Redondo generating plant. The fish ejector system is designed to remove fish from a moving stream of water by attracting or directing fish away from the main flow into a quiet zone where the fish are trapped and subsequently removed to another discharge stream for return without injury. Intermittent removal of fish can be accomplished by means of the addition of water to the trapping compartment causing discharge of fish above an overflow weir. A screen may be raised from the floor of the compartment to cause the

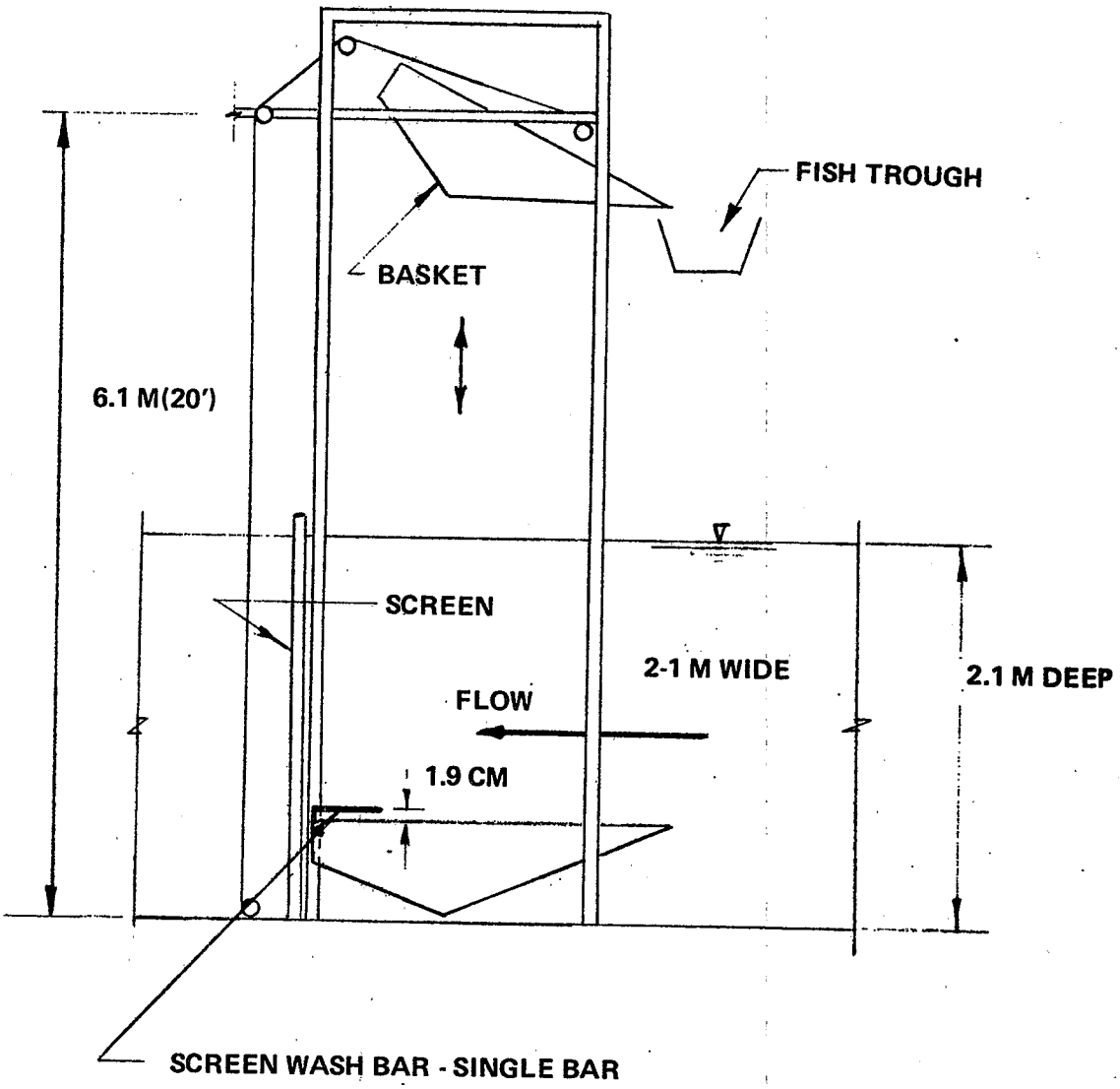

FIGURE III-40 FISH BASKET COLLECTION SYSTEM

fish to rise to the water level adjacent to the overflow weir.

Fish Bypass and Transport Facilities

After being concentrated and removed from the screen well or by other means of taking the fish away from in front of the screen (such as providing slot openings on each side of the screen with flow from in front of the screen going into the slots giving the fish a means of egress) the fish require a means of conveyance back to a hospitable environment in the waterway. The design of the bypass system should minimize the time that the fish is out of water and insure safe and rapid return to the waterway at a location sufficiently removed from the intake to prevent the recirculation of fish and reimpingement. The bypass of fish into the circulating water discharge may cause damage because of thermal shock effects. Once the fish have been raised to an elevation above that of the waterway they can be discharged to a trough or pipe for gravity return to the waterway. Care must be taken in the design of the fittings and elbows of the discharge conduit to prevent undue stress on the fish, which may include shock or exhaustion as well as physical injury. Furthermore, discharge of fish should be made to a hospitable environment. Considerable experience in designing and operating long fish bypasses for both upstream and downstream migrant salmon has been obtained in the Pacific Northwest. The technology exists for these types of systems. Where conditions do not permit direct hydraulic conveyance, fish can be trucked back to the waterway. Trucking fish over long distances does not seem to cause unacceptable mortalities. Both trucking and airlift have been used for seeding waterways with fish. Reference 13 has some suggested criteria for trucking fish.

Modification To Existing Traveling Water Screens

The fish bypass facilities described above were intended to remove fish from the intake structure to prevent impingement. An interesting example of modifying an existing traveling water screen to bypass impinged fish is described below.

The installation is a major nuclear station on the eastern seaboard (plant no. 5111). The station is located above the river and 2.7 kilometers (1.7 miles) from the intake. Water is pumped from the river into the "high level" canal from which it flows by gravity to the screens located at the plant. Apparently juvenile fish pass through the pumps and

become entrapped in the canal for subsequent impingement on the screens. The first modification made was to connect the screen waste flow to the plant discharge canal using a 45 cm (18") polyethylene pipe. Tests made on the system in this condition showed that this transport system minimized mortality when the screens were operated continuously during the cold water period but that damage was above acceptable levels during the summer. Mortality was primarily caused by high screen wash water pressure and by recycling of fish at the air-water interface of the screen front. It was concluded that "recycling" was a higher mortality factor in the summer than in the winter because the more active fish would flip back into the water after the screen basket cleared the water surface and be reimpinged. This would be repeated until the fish were dead or weak enough to remain on the narrow lip until the basket reached the wastewater stream.

The modifications are shown schematically in Figure III-41. They consisted of bolting a 10 gauge steel trough on the lip of the conventional screen baskets. The troughs were positioned to maintain a minimum of 5 cm (2") of water depth during the time of travel between the water surface and the head shaft sprocket. The new screens are designed to be continuously operated, thus reducing the time of any possible impingement of fish on the screen to two minutes or less.

The screen wash system was also modified to minimize damage caused by the standard high pressure jets. As the screen travels over the head shaft sprocket, the fish will be spilled onto the screen surface. On further rotation, fish will slide down the screen and be deposited into a trough of running water for transport back to the river away from the intake structure. A low pressure screen wash system has been incorporated into the design to aid in removing crustaceans and returning them to the river.

Since these modifications are only now being installed at the plant, no data on the performance of these modifications are available. No prior model testing was performed and a prototype will be used to verify the capabilities of the system. If reasonable efficiencies in bypassing fish safely are obtained, this type of system might be utilized to modify other intakes where impingement is a problem. The system could be installed on most existing conventional intakes, and the cost is roughly 30% of the intial screen cost plus the cost of the bypass line. The intake is not substantially changed.

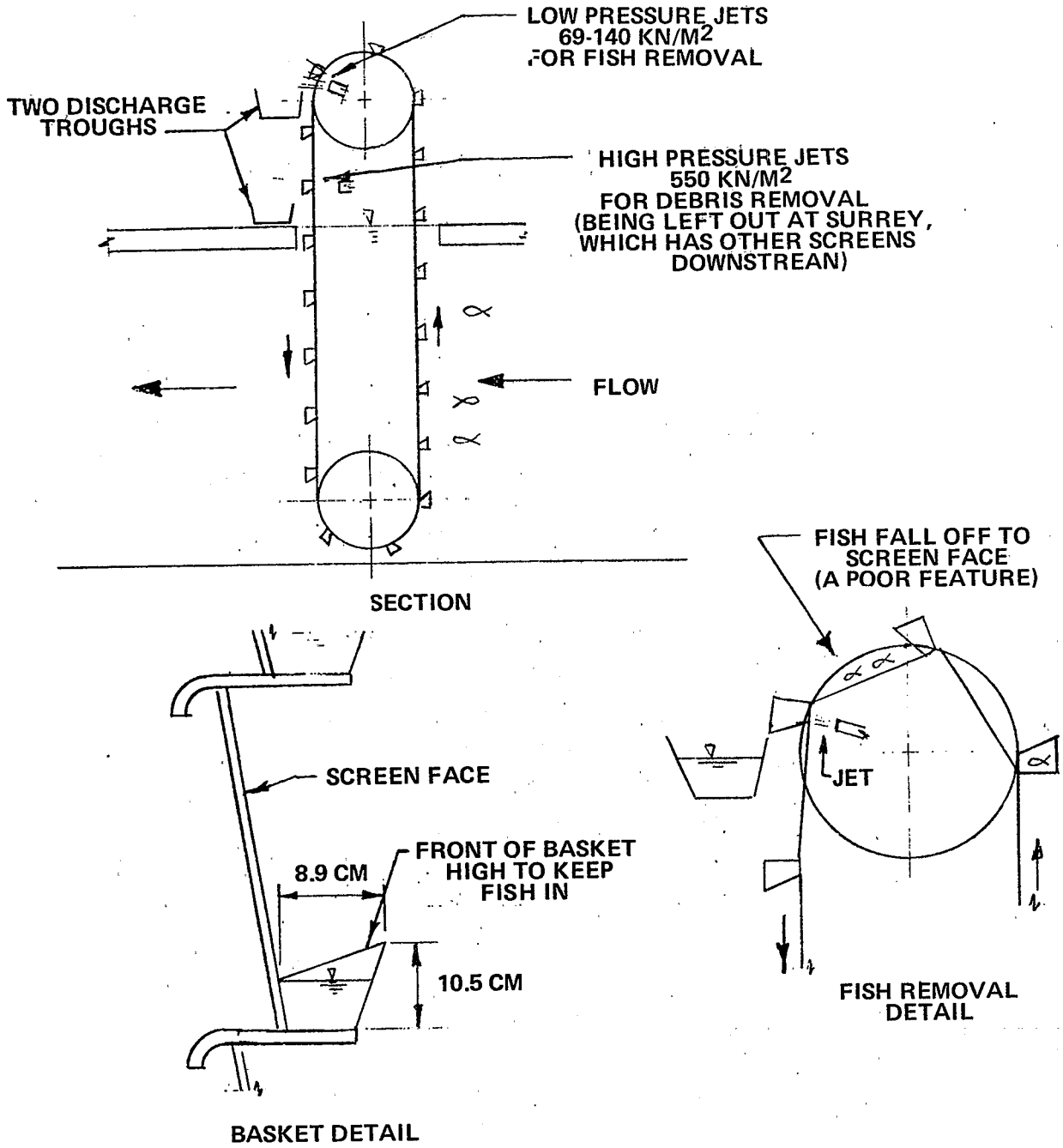

FIGURE III-41 MODIFIED VERTICAL TRAVELING SCREEN

One disadvantage of this system may be a lack of acceptance on the part of some of the regulating agencies. A problem was previously noted regarding discharge of debris after it has been removed from the waterway. As can be seen from the figure, there is no way to avoid discharging a portion of the debris in the fish bypass channel. Stringent restrictions on the discharge of debris may prevent the use of this system at many locations.

Intake Designs

In addition to special biological considerations, the size and shape of an intake structure should be determined to a large extent by the following factors:

- The quantity of intake flow
- The type and amount of debris
- The type of screening system used and allowable water approach velocity
- The relationship of the intake to the water source
- Miscellaneous factors such as need for storm protection, avoidance of excess sedimentation, ice control

Since most existing powerplant intakes employ the conventional traveling water screen they will be referred to as "conventional" intakes, implying that they are equipped with such a screen.

Conventional Intakes

There are three general classifications of conventional intakes based on the relationship of the intake to the water source. These are as follows:

- Shoreline intake
- Offshore intake
- Approach channel intake

Shoreline Intake

The most common intake arrangement is the combination of inlet, screen well and pump well in a single structure on

the edge of a river or lake. The best designation for this installation is "pump and screen structure", to clearly distinguish it from individual structures also commonly used. A plan view of this type of structure is shown in Figure III-42. A cross section of the shoreline structure is shown in Figure III-43. Note that the water passes (in order) the trash rack, the stop log guide and the traveling water screens on its way to the pumps. This type of arrangement is used where the slope of the river bank is relatively steep and there is relatively little movement of the water line between high and low water. A variation of shoreline intake design is shown in Figure III-44. Here a wall is used to insure drawing in of cooler lower strata waters. Walls used primarily to protect trash racks and screen from logs and ice can also be used to draw in cooler water.

Offshore Intake

The offshore design separates the inlet from the pump well. This type of intake is used where there is a significant lateral movement in the waterway between high and low water and where there is a particular technical or environmental reason for utilizing the water supply at a distance from shore. Figure III-45 and III-46 show two similar concepts of such an intake. The design shown in Figure III-46 employs a siphon. The term siphon here refers to a gravity pipe placed above the level of the water and thus flowing at less than atmospheric pressure. The provision of fine screening facilities at the conduit inlet offshore is often impractical because of construction difficulties, because of the navigational hazards it presents or because of difficulty of access for operation and maintenance. Therefore, the fine screens are usually located on shore as shown in both Figure III-45 and III-46. Flow velocities are commonly rather high (about 1.5 to 3.0 mps) in the inlet pipeline to reduce its cost. Most species of fish would not be able to escape entrapment in the system after entering it. Since offshore intakes can have screens onshore, diversion weirs or crowders can be used as a second line of control to remove fish prior to possible interaction with the screen.

Approach Channel Intake

In this type of intake, water is diverted from the main stream to flow through a canal at the end of which is the screening device. This type of intake is shown in Figure III-47. Channel intakes have often been used to separate

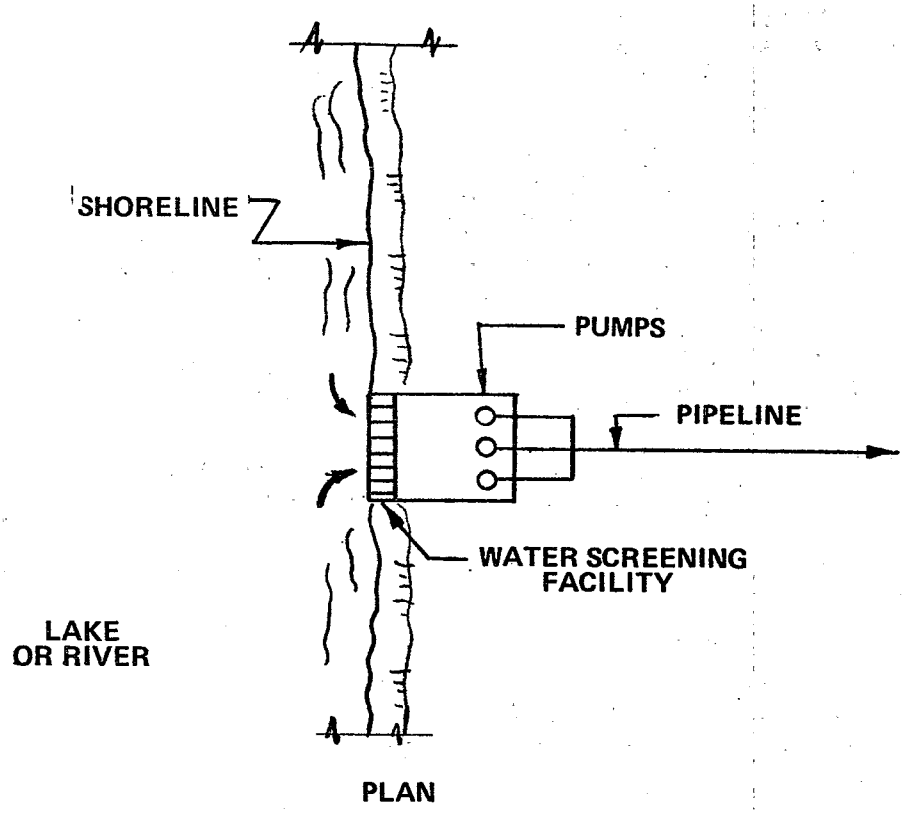

Figure III-42 SHORELINE PUMP AND SCREEN STRUCTURE

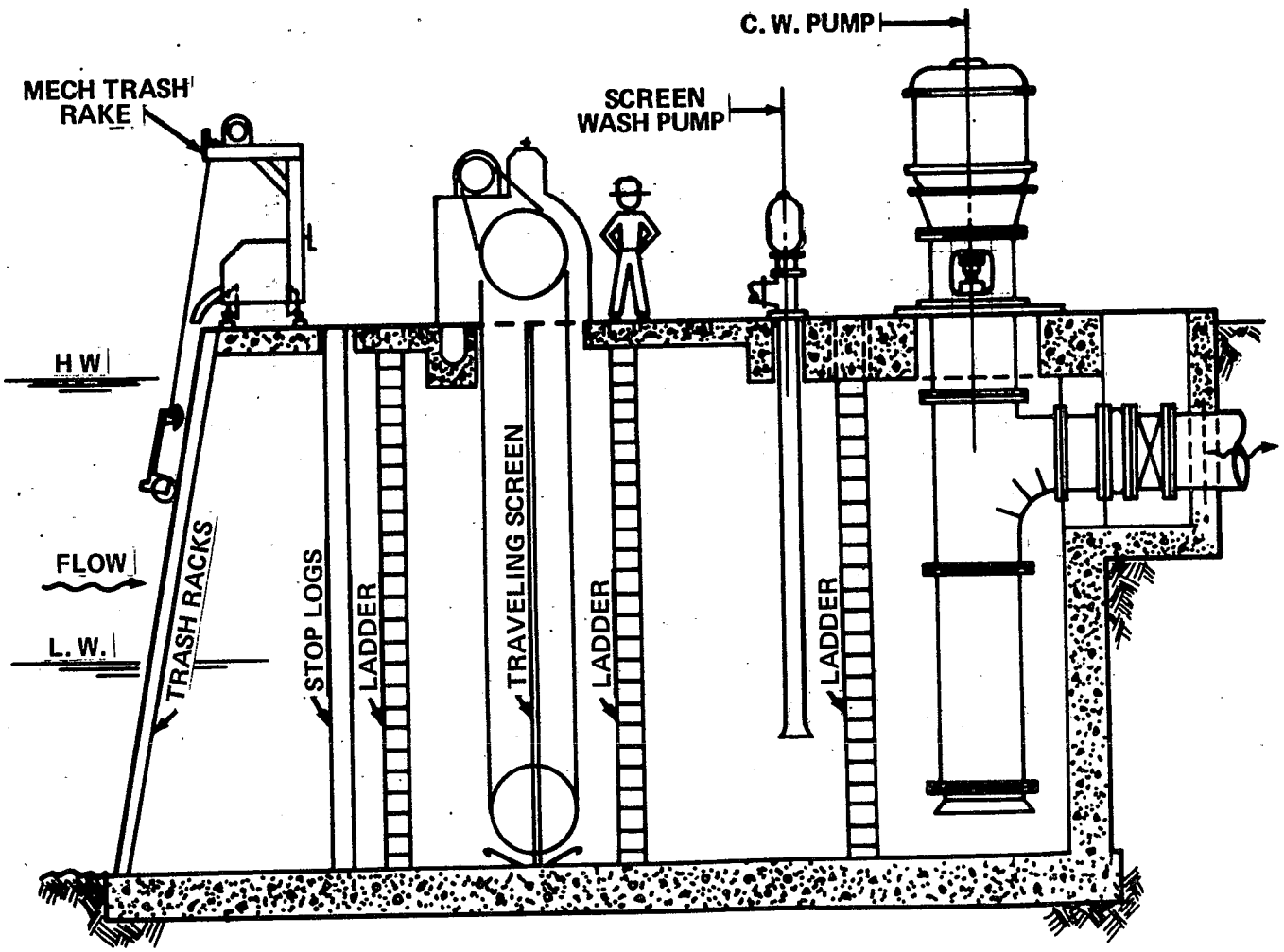

FIGURE III-43 CONVENTIONAL PUMP AND SCREEN STRUCTURE

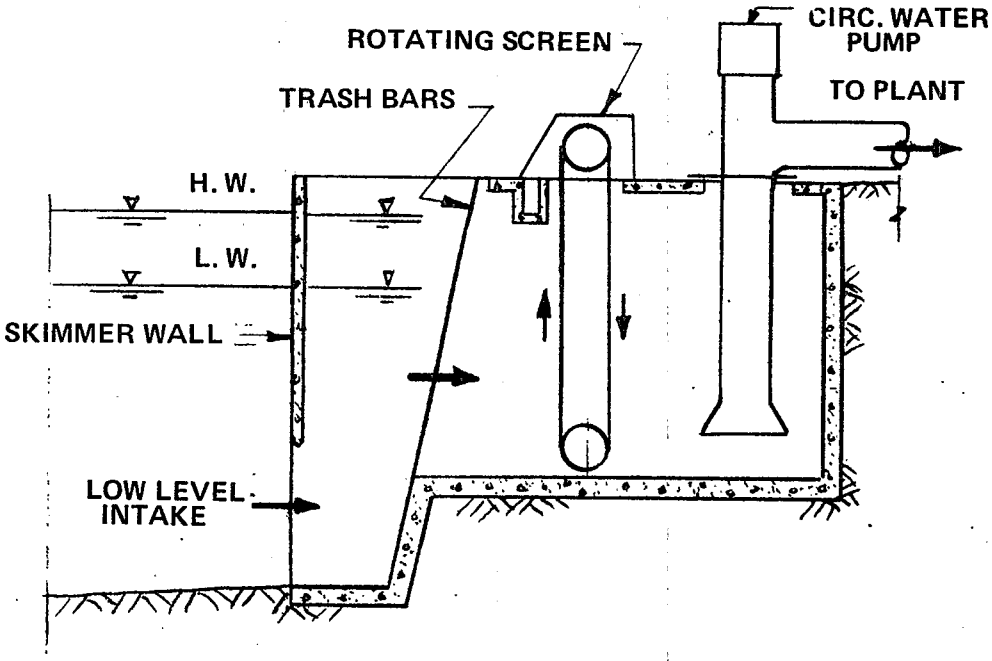

FIGURE III-44 PUMP AND SCREEN STRUCTURE WITH SKIMMER WALL

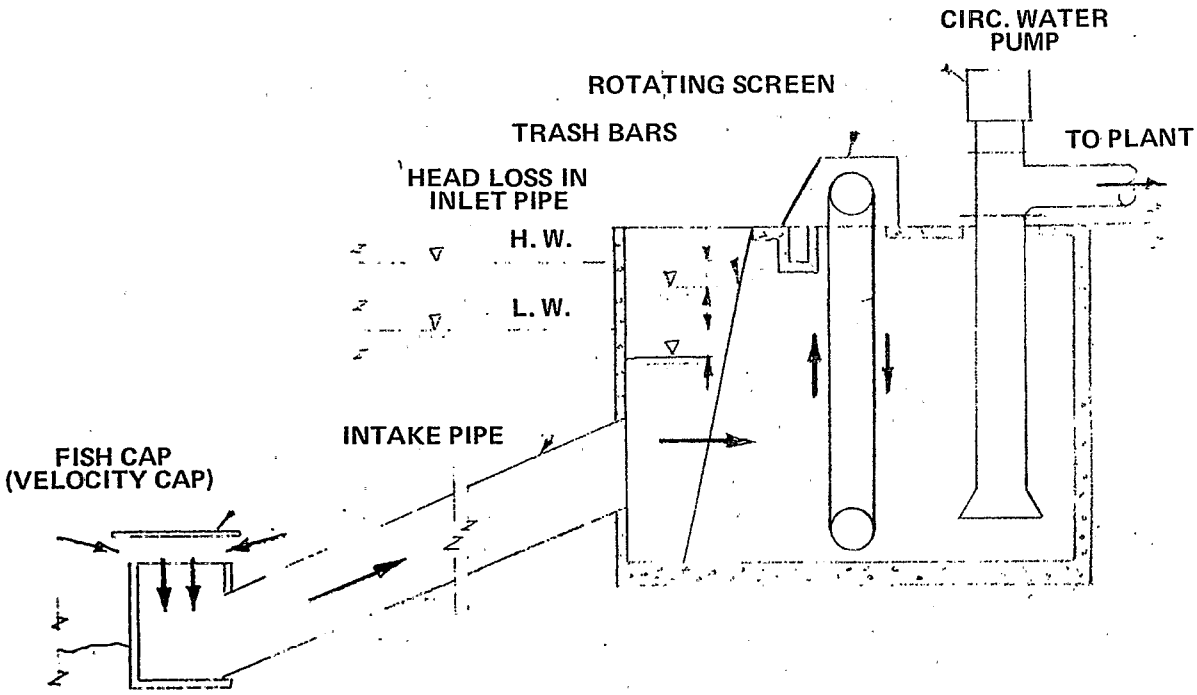

FIGURE III-45 PUMP AND SCREEN STRUCTURE WITH OFFSHORE INLET

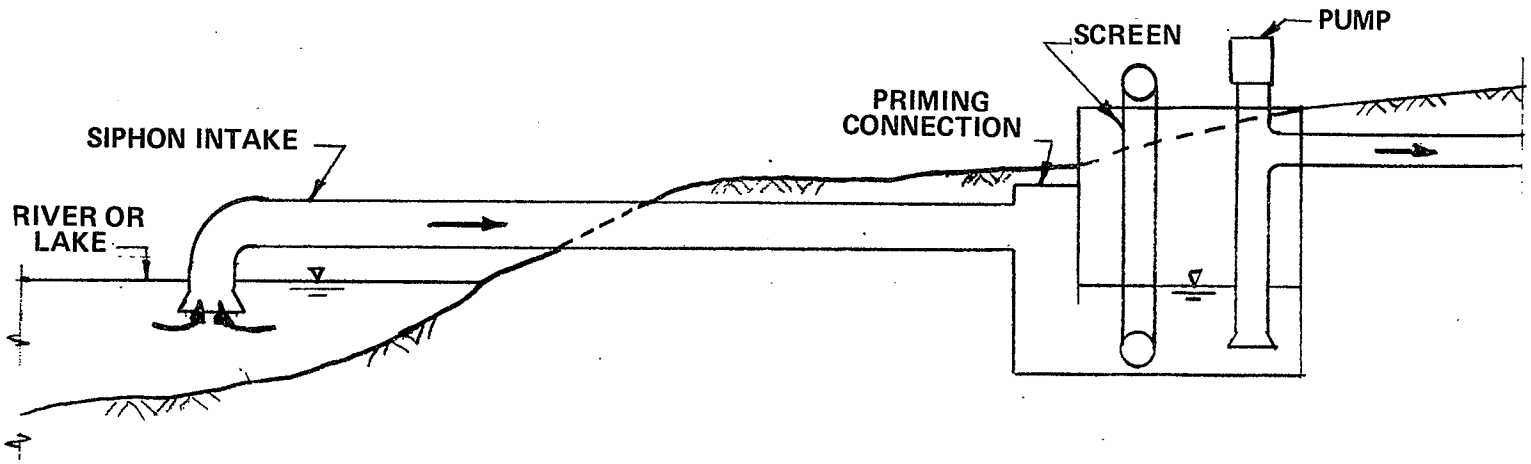

FIGURE III-46 PROFILE THROUGH WATER INTAKE, SIPHON TYPE

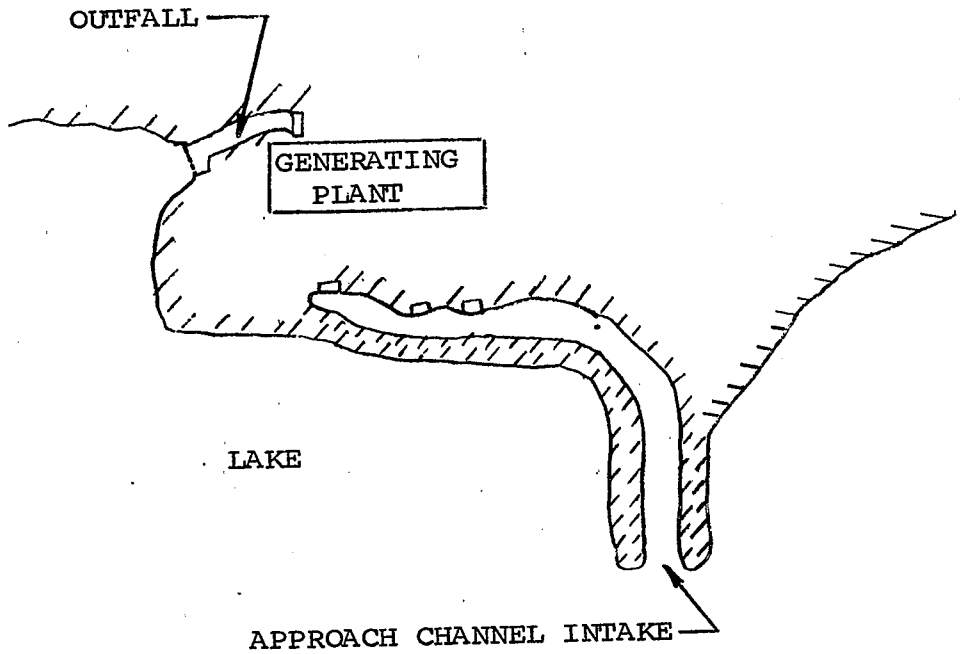

APPROACH CHANNEL INTAKE

FIGURE III-47

the plant intake and outfall for the control of recirculation effects, to permit location of the pump structure where it can more easily be constructed or to reduce total system friction losses and costs by replacing high friction, high cost pipe with low friction, low cost canals. It may also be used to remove the intake from the shoreline for aesthetic reasons, which are discussed elsewhere. However, fish will tend to congregate in these approach channels and thus increase the possibility of entrapment and predation at the screens. A modification of the approach channel concept is shown in Figure III-48, where the screen structure has been placed at the entrance to the channel and becomes essentially a shoreline intake, without the fish entrapment hazards inherent in the channel scheme. However, care must be taken with the shoreline intake to avoid velocities which could increase impingment. In certain cases approach channels may be helpful to achieving uniform approach velocities.

Conventional Intake Design Considerations

In addition to special biological considerations, other important considerations in the design of conventional pump and screen structures are the following:

- Water level variations
- Inlet design
- Screen placement
- Screen to pump relationships
- Flow lines to the pump and the pump chamber configuration
- Ice control provisions
- Access to the structure for operation and maintenance

Inlet safety design considerations will be different for each of the three classifications of conventional intakes. For the shoreline intake an important consideration is to avoid significant protrusions into the waterway. This is shown diagramatically in Figure III-49. The top sketch shows an example of undesirable intake design where the side walls of the intake protrude into the waterway and create eddy currents on the downstream side of the intake. Fish are sometimes found concentrated in these areas, a situation

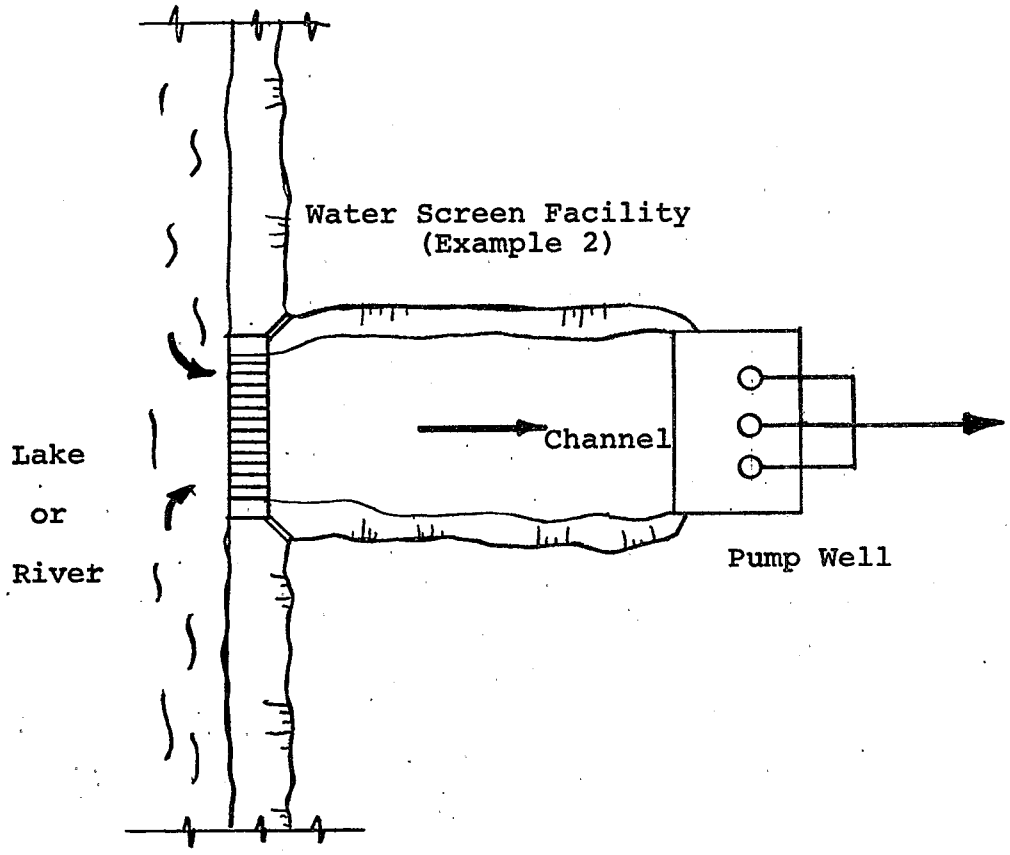

SCREEN LOCATION - CHANNEL INTAKE

FIGURE III-48

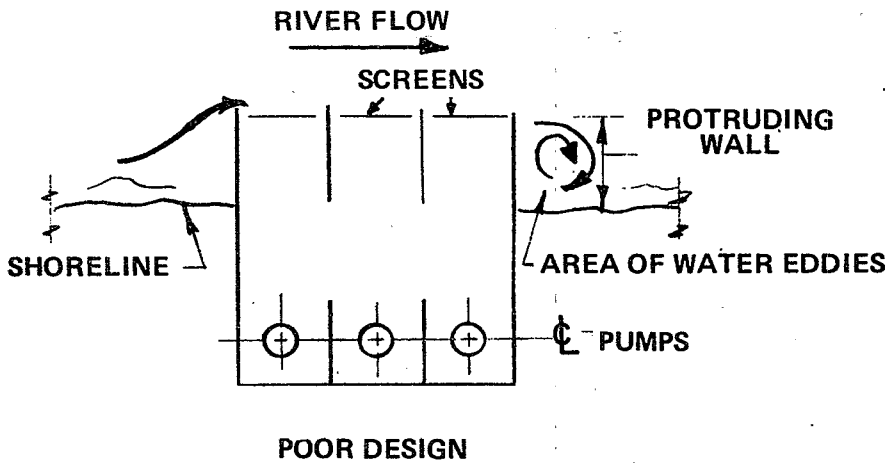

POOR DESIGN

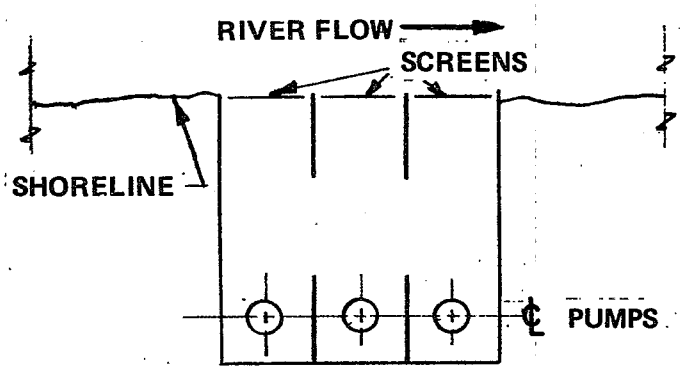

GOOD DESIGN

FIGURE III-49 SHORELINE INTAKE

which may increase the possibility that they will become entrapped in the intake. The bottom sketch shows a more suitable design with no portion of the intake protruding into the flow. Of course, this would not be significant at intakes drawing water from a lake shore location where cross flow velocities are negligible.

Screen Placement

Most conventional intakes are designed with the traveling water screens set back away from the face of the intake between confining concrete walls. As shown in the top sketch of III-50, this creates a zone of possible fish entrapment between the screen face and the intake entrance. Small fish may not swim back out of this area. The bottom sketch of the same figure shows an alternative screen placement with screens mounted flush with their supporting walls. The trash rack facility is so designed that there is an open passage to the waterway directly to both left and right of the screen face. In this design, there is no confining screen channel in which the fish can become entrapped. Figures III-51 and III-52 show two recent designs of "flush" mounted screen structures. The first is the screen and pump for a major fossil-fueled powerplant in the Northeast (plant no. 3601). Figure III-52 is the pump and screen structure for a major fossil-fueled powerplant on the west coast (plant no. 0610). Note that the screens are mounted flush with the shoreline in each case and that fish passageways are provided in front of the screens. In these designs there is no provision for stop logs to permit dewatering the screen wells. Extending the screen support walls to provide stop log guides would defeat the "flush" mounting principle.

Where channel sections leading to the screens cannot be avoided due to some unusual condition, proper design of the screen supporting piers can reduce the fish entrapment potential of the area. This design consideration is shown in Figure III-53. In Figure III-53A an example of incorrect pier design is shown. The pier which protrudes into the flow presents a barrier to fish movement. They cannot make the turns required to escape the screen. Figure III-53B shows a much more suitable design. With the extended portion of the pier eliminated, the fish can move sideways and rest in the relatively still water near the face of the pier.

Maintaining Uniform Velocities Across the Screens

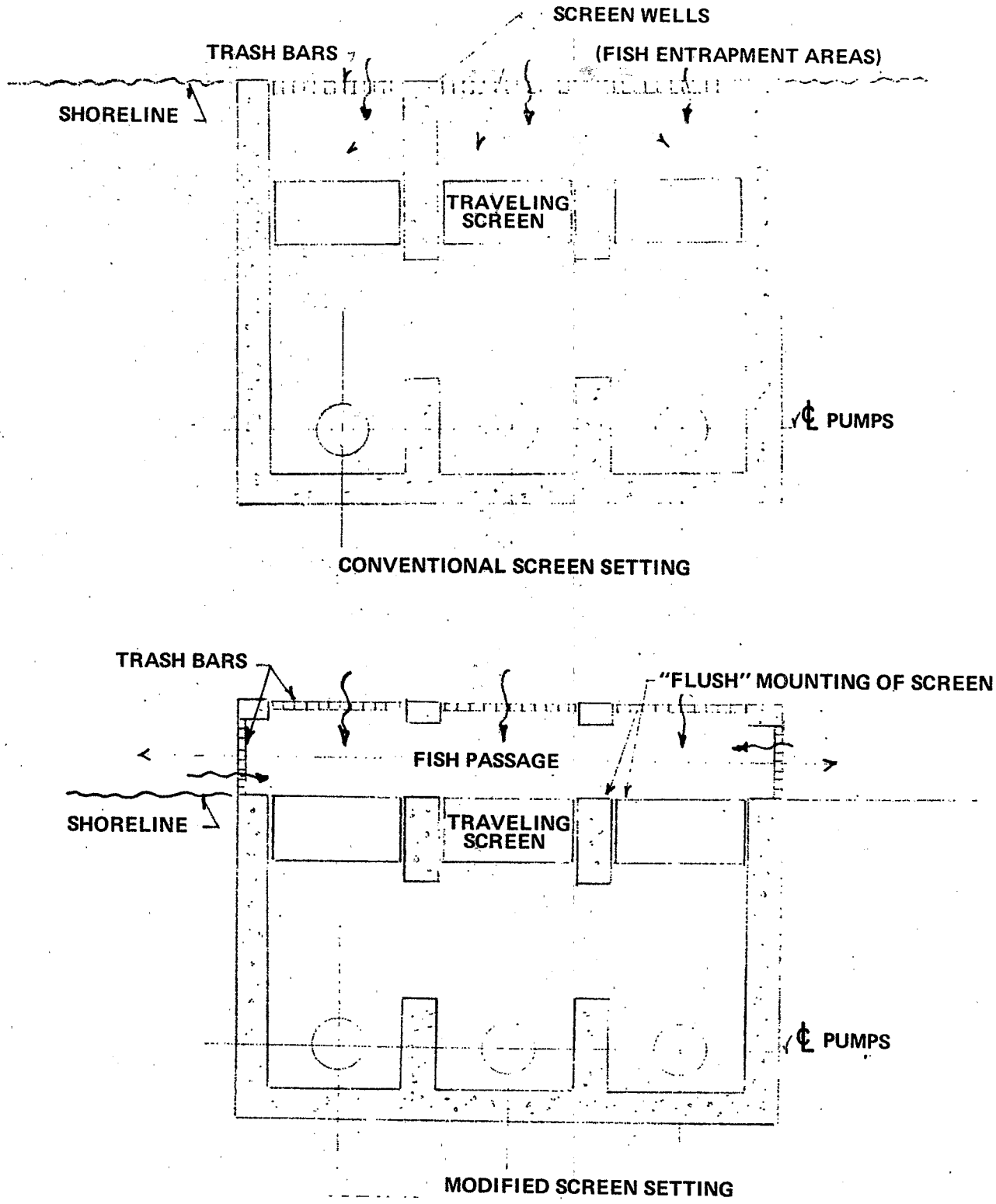

Figure III-50 FLUSH MOUNTED SCREENS - MODIFIED AND CONVENTIONAL SCREEN SETTINGS

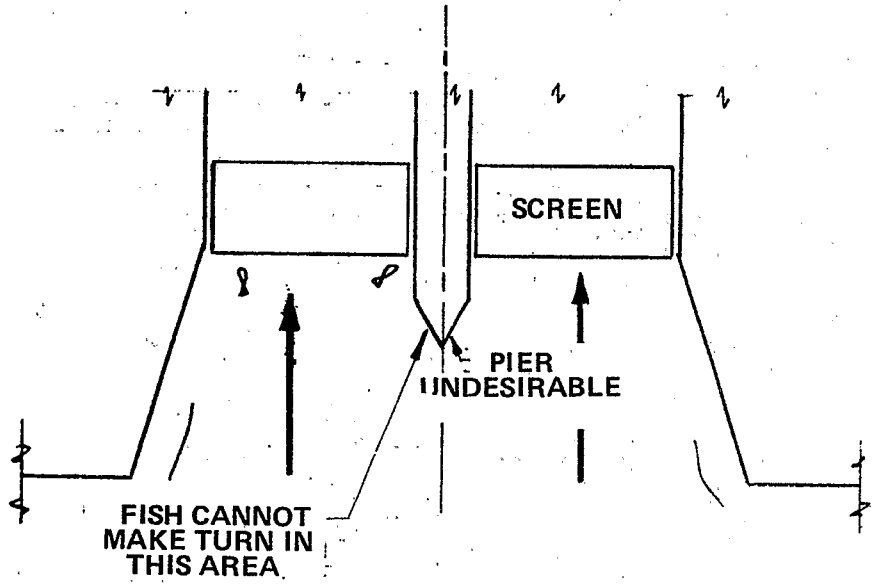

FIGURE A
UNSATISFACTORY DESIGN

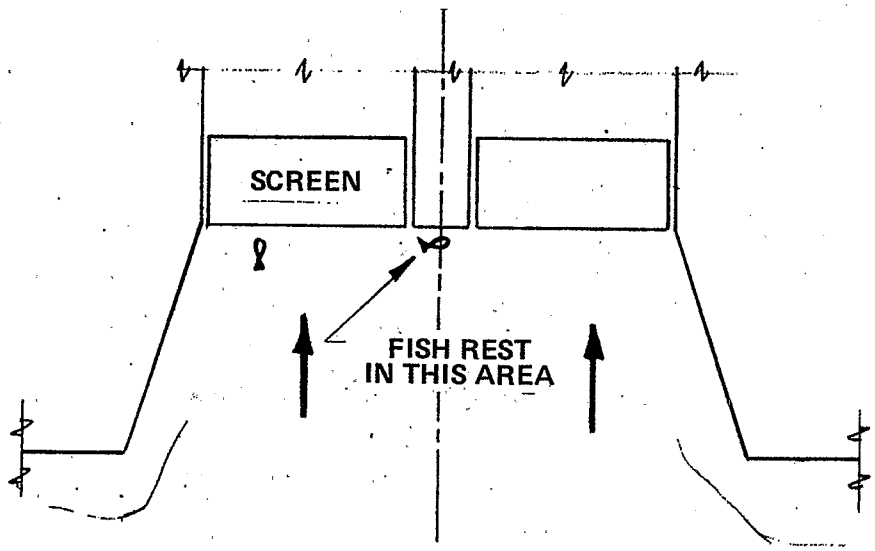

FIGURE B
IMPROVED DESIGN

FIGURE III-53 PIER DESIGN CONSIDERATIONS

It is essential in good screen structure design for environmental protection to maintain uniform velocities across the entire screen face. When flow is not uniform across the screen, the potential for fish impingement is increased.

Figure III-54 tabulates a typical run of a model test series made for a major plant in the Northeast (plant no. 3601). The variation in velocities is evident. Flow distribution in many existing intakes is much less uniform than indicated in Figure III-54.

There are several ways in which a non-uniform screen velocity can be created. Figure III-55 illustrates some of the factors which create non-uniform velocities in the screen area. Sketch A of Figure III-55 shows the condition when water approaches the screen structure at an angle. Flow tends to concentrate at the downstream side of the water passage entrance and in some cases may even flow backwards on the upstream side. Sketch B shows the effects of walls projecting into the water passage. Walls similar to that shown here are frequently used to reduce the intake of surface debris or to confine the entering water to a lower and normally cooler strata. The result is not only the creation of non-uniform velocity conditions at the screens, but also the creation of a dead area where fish may become entrapped. They will not usually swim back to safety under the wall. Sketches C and D show the effects of pumps or downstream water passages so located that water is drawn from a limited horizontal or vertical strata as it passes through the screens. Pumps or gravity exit pipes may be too close to the screen or may be offset from the screen center. Hydraulic Institute standards recommend a minimum distance from screen to pump, but this distance is established for suitable pump performance, not for best utilization of the screen area.

The obvious result of the non-uniform distribution of flow through the screens is the creation of local areas of flow velocities much higher than the calculated average design velocities. Entrapment of fish is thus potentially increased.

One basic consideration in initial layout of the intake is the matching of the pumps to the screens. Figure III-56 illustrates four intake variations to accommodate pumps of a wide range of sizes. Sketch A is an intake for several small pumps served by one screen. This type of arrangement is dictated when the individual pump capacities are smaller than the minimum sized screen employed . Sketch B is a one

VELOCITY MEASUREMENTS (IN FT/SEC) AT ENTRANCE OF PUMP BAY NO. 3 FOR THE FOLLOWING CONDITIONS:

PUMPS 1,2 AND 3 IN OPERATION: 2FT/SEC RIVER FLOW WITH THE WATER LEVEL OF 0', AND FULL WALL OPENINGS.

FIRST CROSS-SECTION (UPSTREAM FROM THE TRASH-RAKE)

	(a)	(b)	(c)	(d)	(e)	(f)
NEAR BOTTOM	0.34↑	1.06↖	1.12↗	0.74↖	0.95↖	0.75↗
MID-DEPTH	0.45↑	0.93↑	1.02↖	0.89↖	0.75↖	0.83↗
NEAR SURFACE	0.57↖	0.67↑	0.33↗	0.41↗	0.31↗	(NIL)

SECOND CROSS-SECTION (IN THE FISHWAY)

	(a)	(b)	(c)	(d)	(e)	(f)
NEAR BOTTOM	0.39↓	0.57↑	0.99↑	(NIL)	0.75↑	0.73↑
MID-DEPTH	(NIL)	0.57↑	0.95↑	(NIL)	0.90↑	0.80↑
NEAR SURFACE	0.62↑	0.68↗	0.87→	0.77→	0.95→	0.72→

THIRD CROSS-SECTION (DOWNSTREAM FROM THE SCREEN)

	(a)	(b)	(c)	(d)	(e)	(f)
NEAR BOTTOM	0.68↑	0.84↑	0.80↑	0.60↑	0.74↑	0.67↑
MID-DEPTH	0.80↑	0.95↑	1.06↑	0.67↑	0.80↑	0.81↑
NEAR SURFACE	1.20↑	1.01↑	0.47↑	0.63↑	0.63↑	(NIL)↑

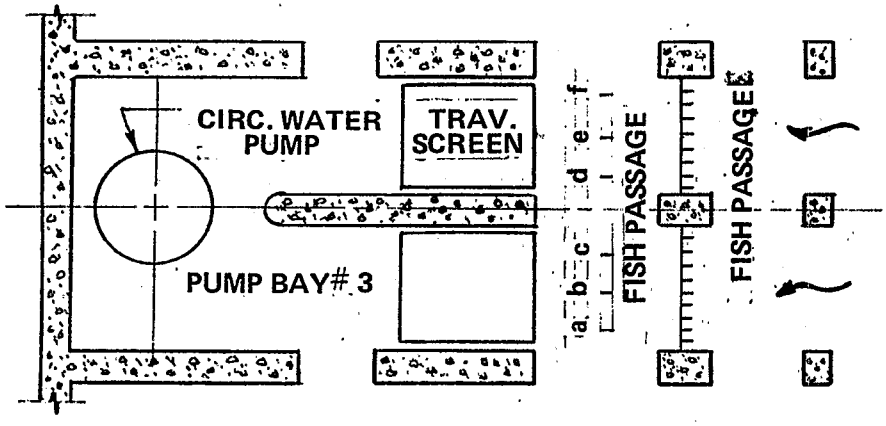

FIGURE III-54 SCREEN AREA VELOCITY DISTRIBUTION

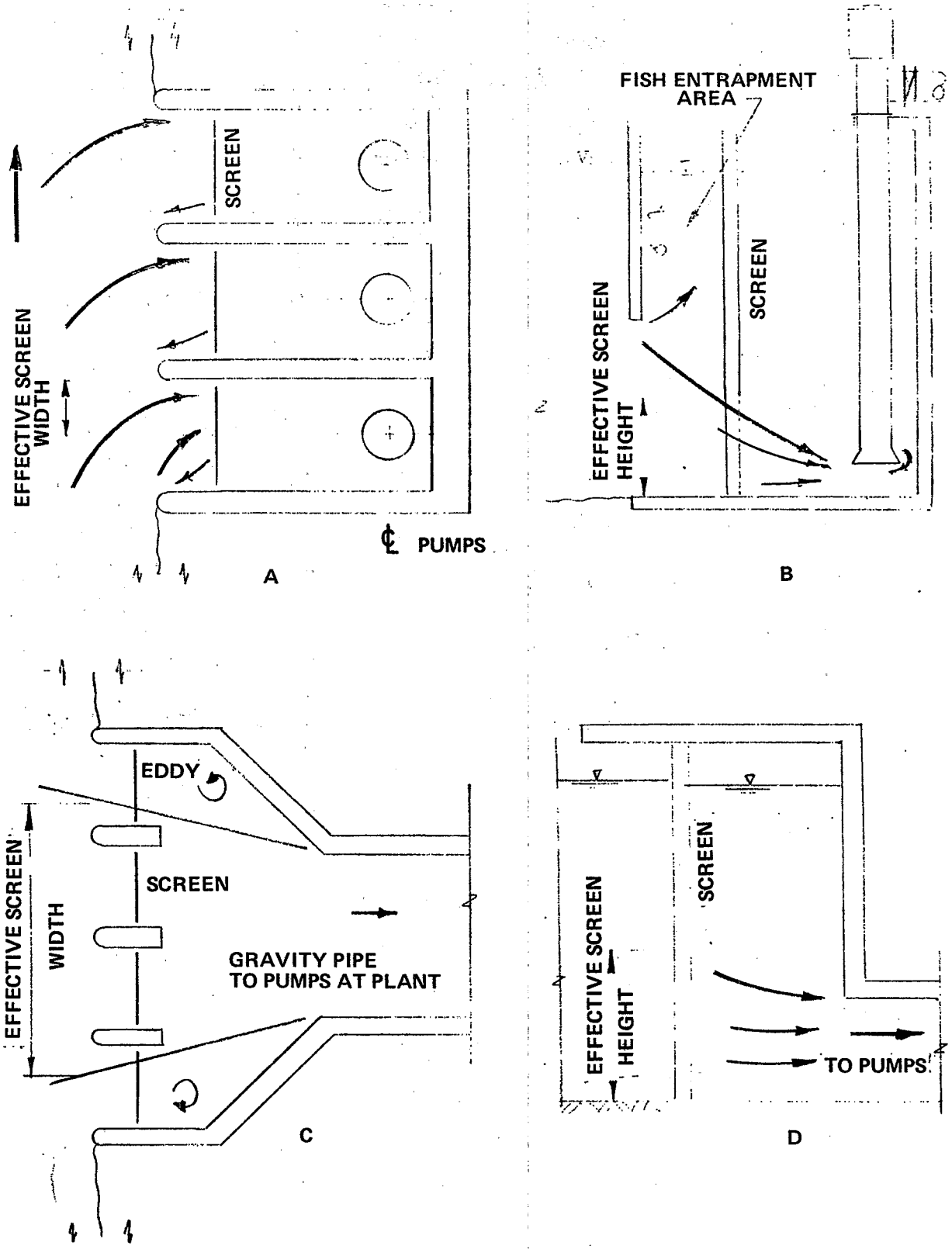

FIGURE III-55 FACTORS CONTRIBUTING TO POOR FLOW DISTRIBUTION

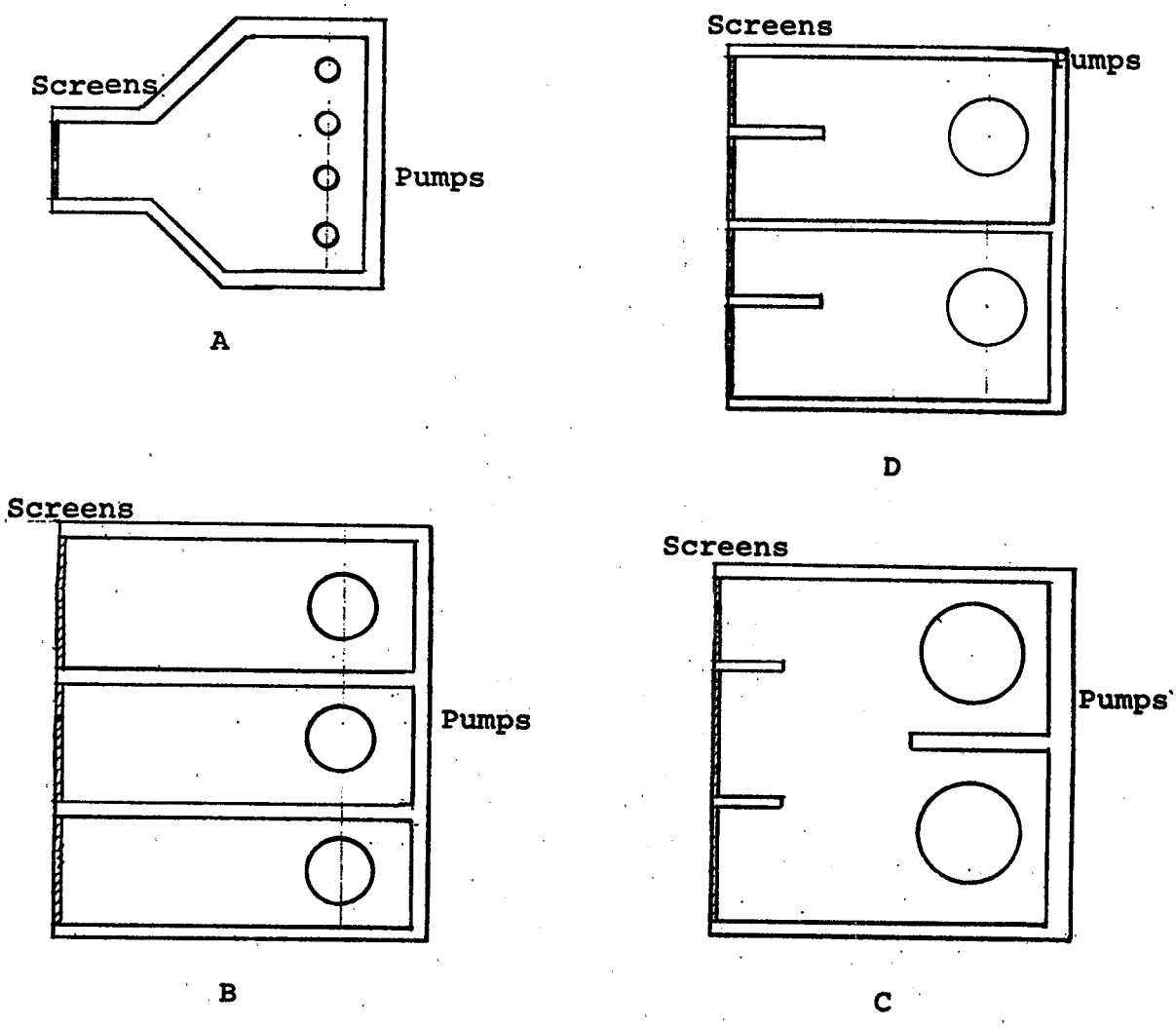

PUMP/SCREEN RELATIONSHIPS

FIGURE III-56

pump - one screen arrangement common for medium size pumps up to about 100,000 gpm. Beyond this pump size the physical limitations on the screen size (14 foot trays or baskets are the maximum commercially available) requires the use of multiple screens per pump. Sketches C and D illustrate possible combinations. Care must be taken to locate the screen with respect to the pump in a manner which will properly utilize the entire screen surface. If a very low screen velocity is required for a very large pump installation, the length of structure required for the screens may be greater than that which will be hydraulically suitable for the pumps. Such a requirement could result in the configuration shown on Figure III-57.

Pump Runout and the Effect on Screen Settings

Sketch A of Figure III-58 shows a typical one screen per pump intake. If the screen is sized for the design flow of the pump, the screen velocities will substantially increase during periods when only one pump is in operation. This is the result of the "runout" characteristics of the pump which tends to pump more water as the total system flow and head losses decrease. As much as 40% flow increase might be expected. Operation in this manner is common in those areas where winter water temperatures are much lower than summer temperatures. We may then expect an increase in screen velocity during those cold water periods when lethargic fish might be least able to resist the flow. Consequently, if this type of setting is used, the screens must be designed for the expected runout flow of the pump.

An alternative to the individual bay setting shown in Sketch A is to place the pumps as shown in Sketch B of Figure III-58. In this case, an open chamber is located in the side wall between the pumps and the screens. The operating pump may thus utilize a part of the screen area normally used for an adjacent pump. Field and laboratory tests show that only a small part of the adjacent screens are effectively utilized in this situation, but that a small part will be sufficient to compensate for the increase in pump flow if the screens and pump are properly located.

An intake of the latter type will be larger and more costly than the former. Maintenance procedures may be complicated by the fact that the central bay cannot be dewatered and also the dewatering of individual screen and pump bays becomes more complex.

Design of Ice Control Facilities

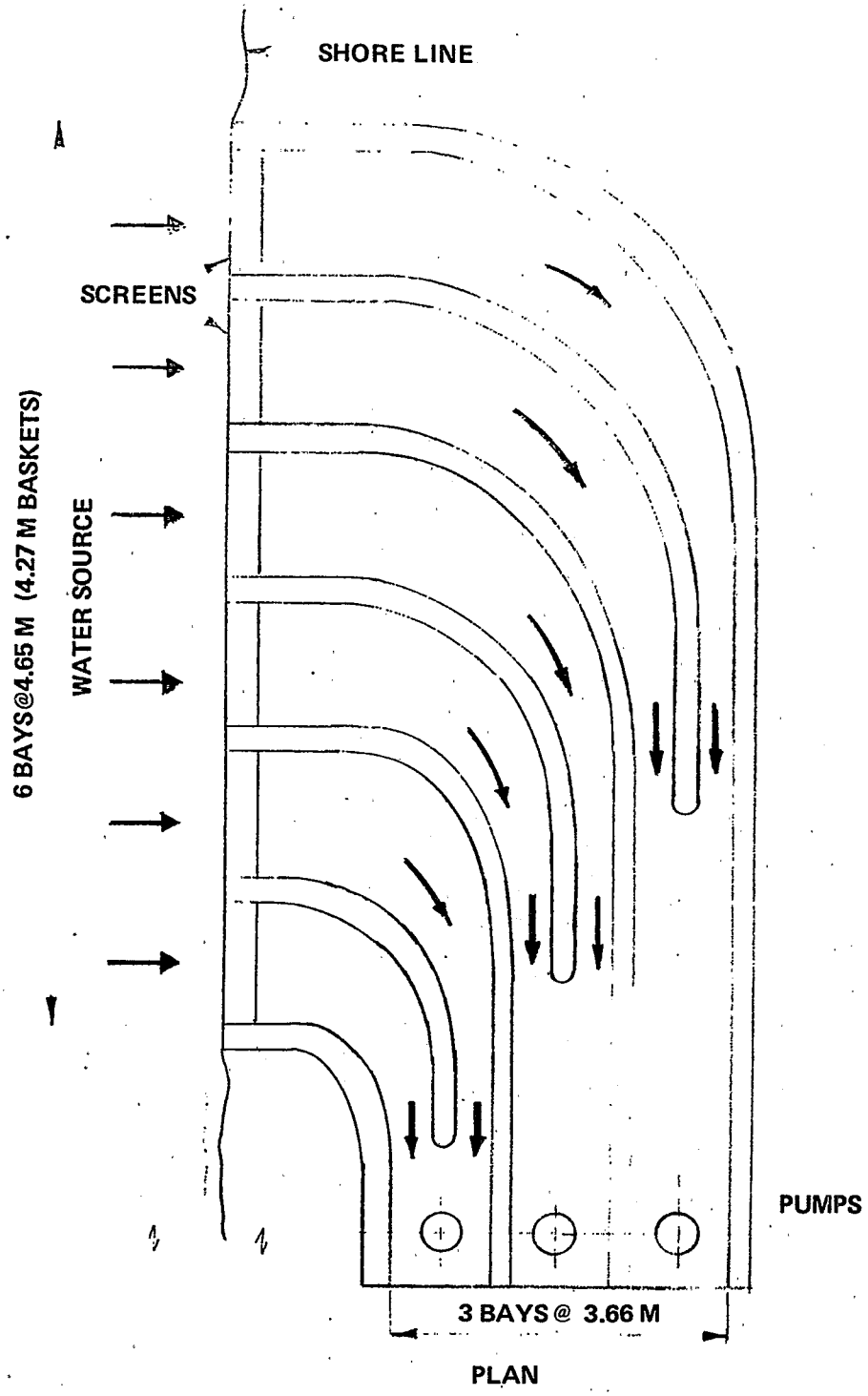

FIGURE III-57 PUMP AND SCREEN STRUCTURE FOR LOW INTAKE VELOCITIES

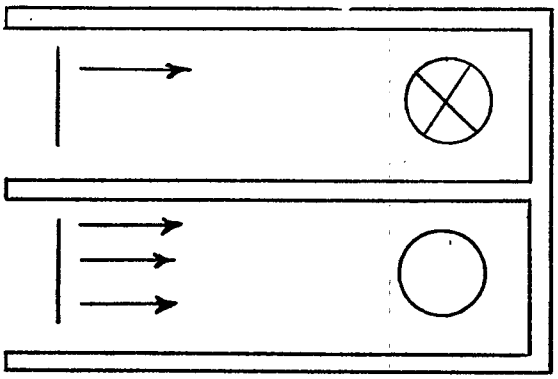

A

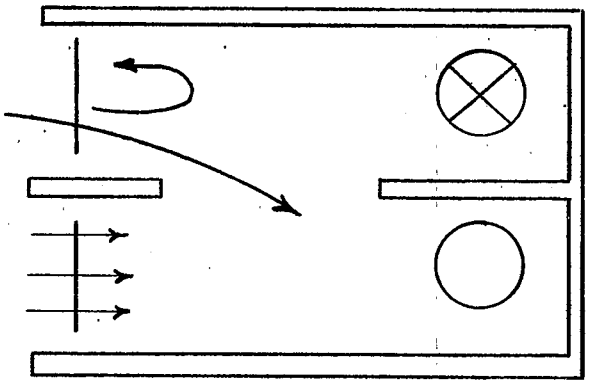

B

EFFECT OF PUMP RUNOUT

FIGURE III-58

Most powerplant intakes located in the northern latitudes must have some provision for ice control during the winter months. Sheet ice and "frazil" ice ("needle" ice) can cause flow blockage at the intake. The system most frequently used to control the ice problem is the recirculation of a portion of the warmed condenser water back to the intake. Figure III-59 shows a cross section of a powerplant intake with the ice control header and discharge ports located upstream from the screens. The sketch shown is for a major nuclear plant located on the Mississippi (plant no. 3113). A variation of this method would be to recirculate only intermittently to minimize retention of fish "attracted" to the intake area by the warmer water used for ice control.

Other ice control systems that have been tried have been less successful. In particular, several attempts to use an air bubble curtain (similar to that described in the section on behavioral screening) to control ice have not been completely effective. Other methods of ice control are to place the intake well below the water surface, or, for sheet ice, to agitate the water surface with propellers or similar devices.

The problem with the use of the recirculation system for ice control is that it has been shown that fish concentrate in warmer water in the winter time, thus increasing their possible interaction with the screen. It has also been shown that fish are lethargic in the cold water periods and cannot swim well against the intake flow. These two factors can combine to make the traditional warm water recirculation system less than desirable from an environmental standpoint.

Non-Conventional Intakes

Non-conventional intakes involve the use of methods for separation of water and debris other than the screening devices and/or screen mountings previously mentioned. The non-conventional intakes described in this section include the following:

- Open setting screen
- Filter type intake
- Perforated pipe intake
- Radial well intake

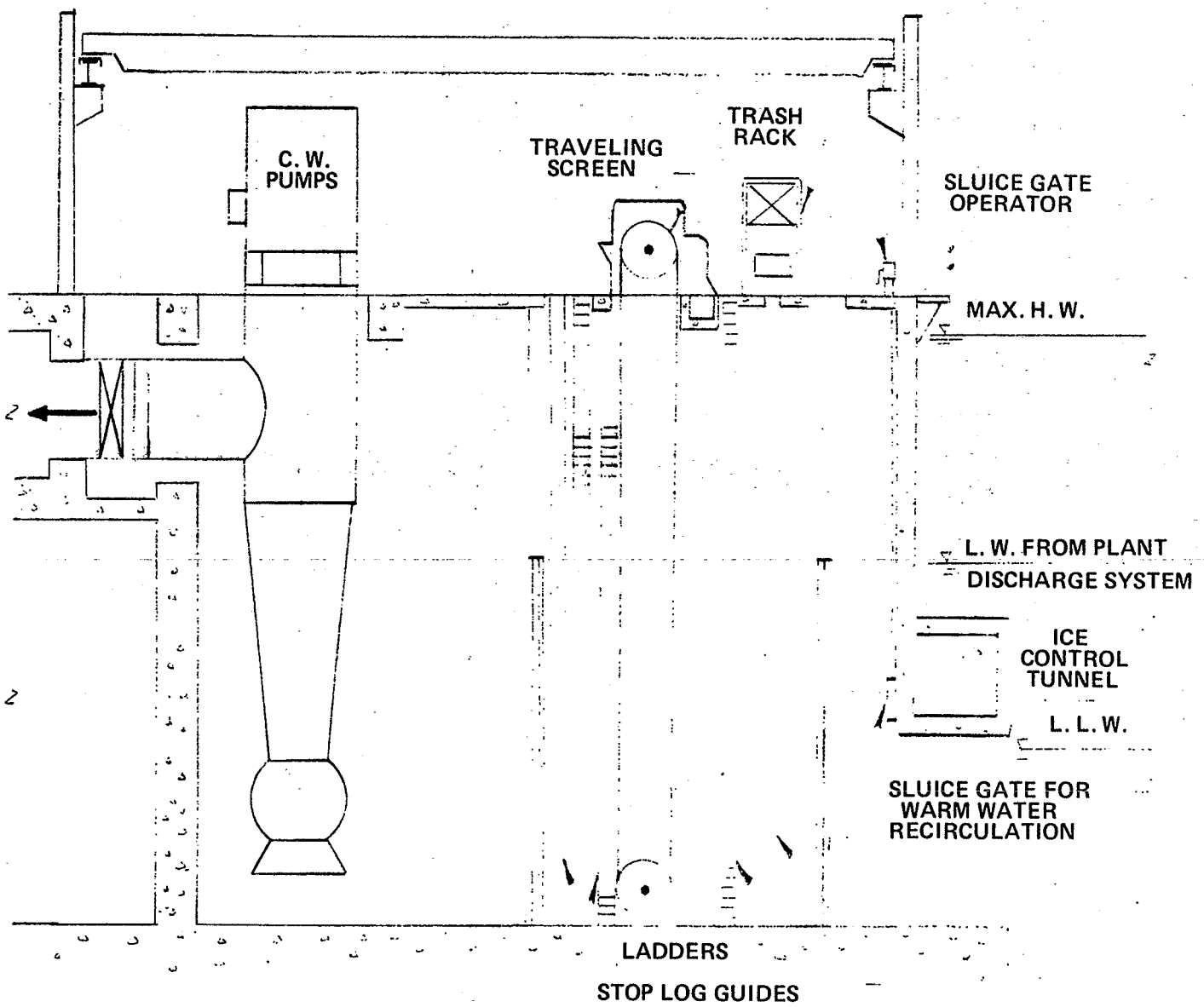

FIGURE III-59 PUMP AND SCREEN STRUCTURE WITH ICE CONTROL FEATURE

Behavioral Intakes

Open Setting Screens

Figures III-25 and III-38 show two screens which have been mounted on platforms and connected directly with the pumps which they serve. One is the double entry, single exit vertical traveling screen, the other the double entry drum screen of European design. Both of these screening systems have open water completely around them, thus eliminating to a large degree possible fish entrapment areas. A second advantage of these systems, and the original purpose for which they were developed, is the elimination of costly concrete screen wells. Most such installations would require some type of trash rack protection which is not shown in the figures.

Flow distribution through the screen faces may not, however, be suitably uniform. The areas nearest the inlet to the pumps will tend to have higher flows and velocities and may therefore result in undesirable fish impingement. This objection might be overcome with internal dividers and increased screen sizes, but no information is available that indicates that such measures have been utilized.

A similar system is being used at plant no. 1229 located on the Southeast coast. The system has performed reliably for several years.

Filter Type Intake

Many types of filter intakes have been developed on an experimental basis and some have been installed in relatively small scale applications for powerplants. The essential feature of all these schemes is the elimination of mechanical screens. The water is drawn through filter media such as sand and stone. Such an intake is capable of being designed for extremely low inlet velocities and can be effective in eliminating damage even to small fish. Planktonic organisms can also be protected to some extent.

Figure III-60 is a sketch of a stone filter in use since late 1971 to screen makeup water for a large powerplant in the Northeast (plant no. 4222). The sketch shows the original filter. It has since been modified several times in attempts to improve its performance. It still has a tendency to clog and cannot yet be considered reliable. Figure III-61 is a somewhat more complex design developed

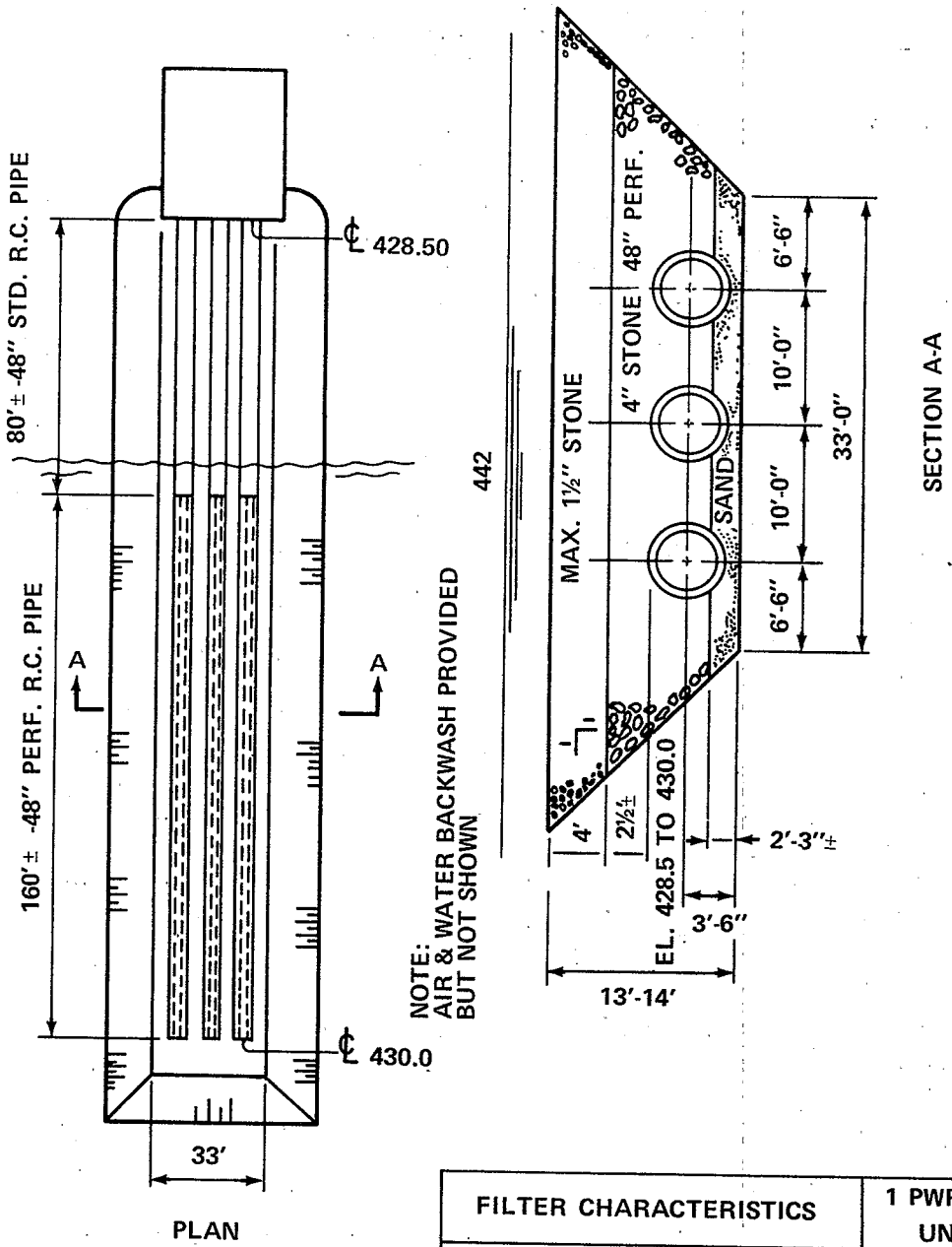

FILTER CHARACTERISTICS	1 PWR PL UNIT	ULTIMATE 3 UNITS
Q GPM	15,7000	33,000
FILTER PIPE RATE GPM/FT	33GPM/FT	69 GPM/FT
FILTER BED RATE (35' x 170')	2.64GPM SQ. FT.	5.55GPM SQ. FT.
FILTER SURFACE INFILTRATION VELOCITY	0.006 FPS	0.012 FPS
MAX. V/PIPE	0.93 FPS.	2 FPS

FIGURE III-60 INFILTRATION BED INTAKE - PLANT NO. 4222

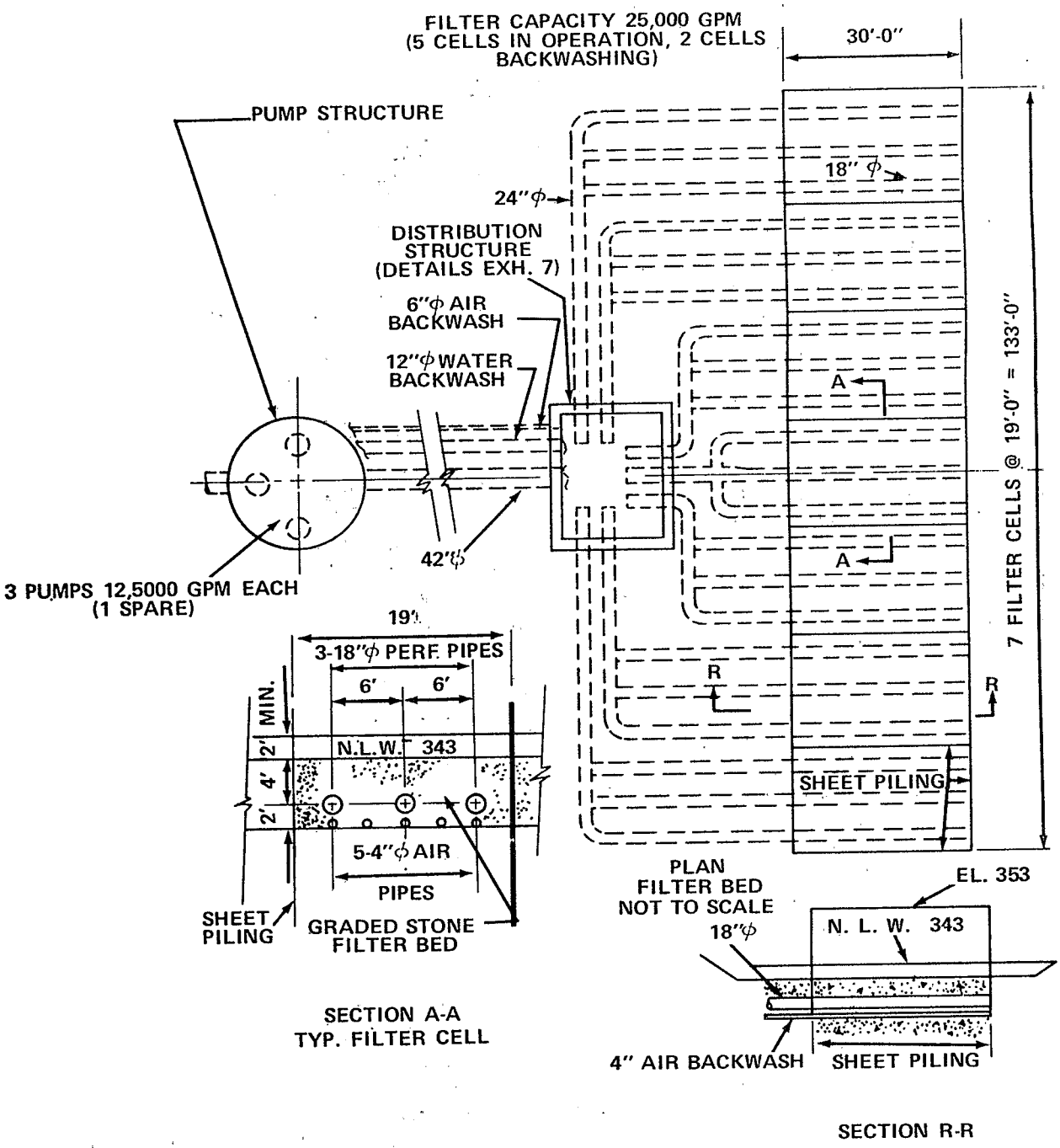

FIGURE III-61 INFILTRATION BED INTAKE - PLANT NO. 5309

but not used for the makeup water of a large powerplant in the Northwest (plant no. 5309).

A preliminary filter design has been developed for the entire circulating water flow to serve a major powerplant in the Northwest (1,500 cfs). This system employs precast concrete filter modules in seven separate filter sections, each capable of being isolated for maintenance. The entire filter complex would be about (450 x 260 feet) in plan. Fairly complex piping, water control and pump facilities complete the system.

Another filter system concept which has been used with some success in relatively small intakes is the "leaky dam" which consists simply of a stone and rock embankment surrounding the pump structure. Water must flow through the "dam" to reach the pumps. The dam thus acts as a screen. Very low water passage velocities can be achieved and the danger of fish impingement is reduced. Very small fish can, however, pass through the openings in the stone. A major problem for this system in waters containing suspended matter would be clogging. Practical backwashing facilities have not been developed. An intake system of this type has been operated at powerplant no. 5506 since late 1972. It has been reported be 70-75% effective in screening out fish.

Although these filter intakes would appear to be ideal from an environmental point of view, they have many disadvantages. The clogging problem is foremost. In turbid waters such clogging would rule out the filter use. Backwashing facilities will be needed in even relatively clear water. The backwashing procedure will temporarily raise the turbidity of downstream waters and thus may be in conflict with limitations on turbidity. To date no large scale filter system has been developed and proved reliable in operation. The cost of such a system will be substantially higher than for a comparable conventional screen facility.

Perforated Pipe Intake

A typical perforated pipe intake is shown in Figure III-61 and III-62. This concept has been discussed in detail under "fixed screens" elsewhere in this report. The figures show a preliminary design being considered at this time for the makeup water system of a major steam electric powerplant in the Northwest (plant no. 5309). The concept can be expanded to handle substantially greater quantities of water than the 25,000 gpm to be passed through the illustrated intake. The

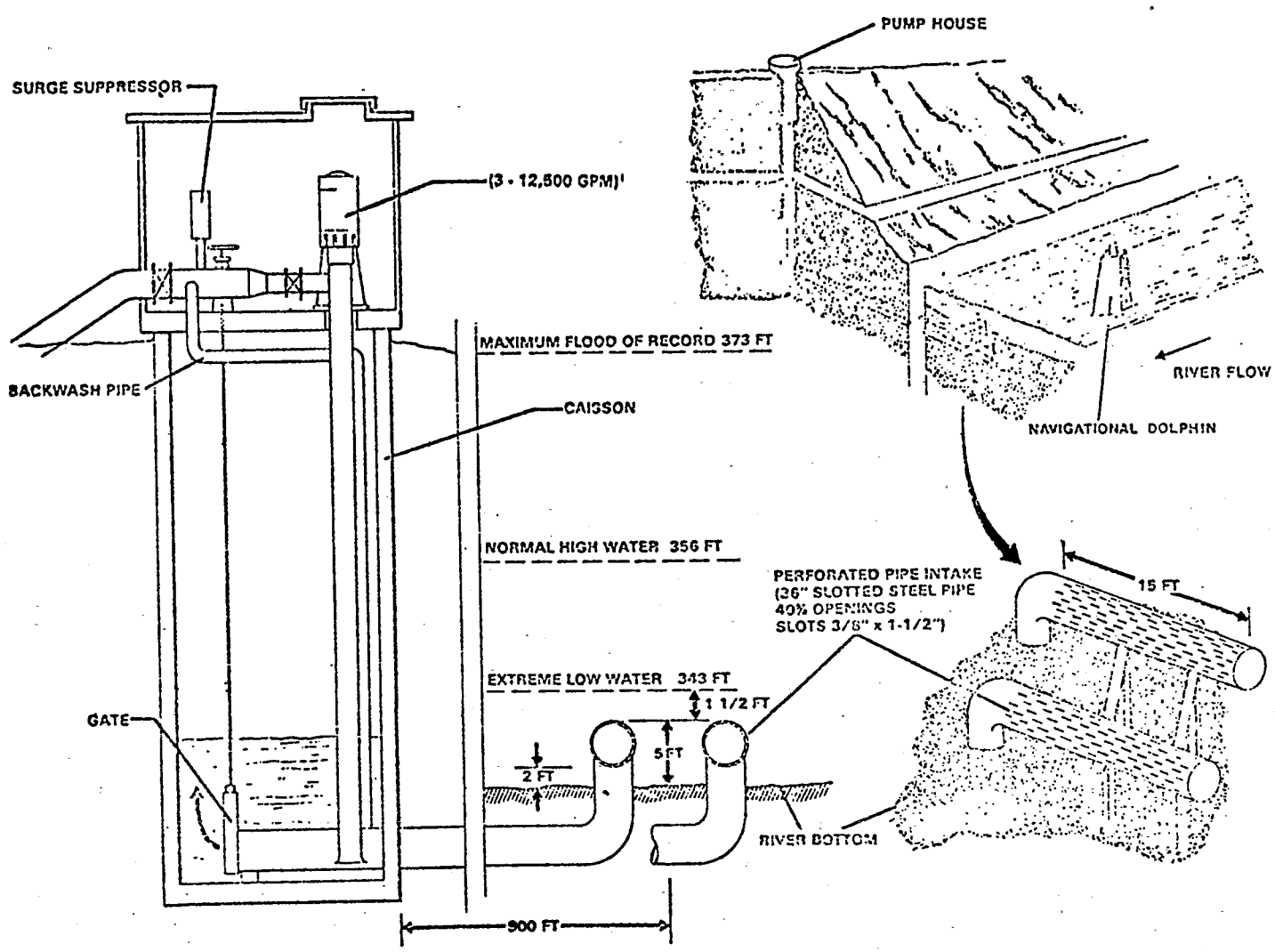

PERFORATED PIPE INTAKE

FIGURE III-62

previous discussion includes a review of the advantages and disadvantages of this scheme.

Radial Well Intake

The radial well intake is an infiltration type utilizing natural in-place pervious material as contrasted with the artificially prepared filter beds discussed above. Slotted pipes are jacked horizontally into sand and gravel aquifers beneath the river bed. These pipes are connected to a common pump well. This is an intake which has been frequently used for obtaining highly filtered industrial and municipal water. The radial well intake is shown in Figure III-63. This type of intake can only be successful where suitable water bearing permeable material is found. It provides a degree of screening which far exceeds the requirements for cooling water supplies. It has the advantage of being the most environmentally sound intake system because it does not have any direct impact on the waterway. It would be competitive in cost with conventional small intakes of the same capacity. However, for very large capacity requirements, several individual widely scattered cells would be required and the cost would be substantially greater than for a conventional intake. Radial well intakes have been in service for over 35 years and have been reliable.

Behavioral Intakes

The wide variety of behavioral intakes has been discussed elsewhere in this report. They represent a substantial departure from "conventional" screen facilities. Such intakes include horizontal screens, louvers, air bubbles, sound, etc., and combinations of these features with each other and with more conventional facilities.

Conventional intakes themselves can be modified to take advantage of fish behavior. For example, angling conventional screens to the incoming water flow can guide fish to bypasses in the same manner as the horizontal screen and the louvers. Figure III-64 is a sketch of such an installation. The total facility would be substantially more costly than the more conventional setting due to the orientation of the screens and the need for providing fish bypass facilities (possibly including fish pumps and auxiliary water cleaning equipment). Hydraulic studies can be made to develop guide walls both in front of and behind

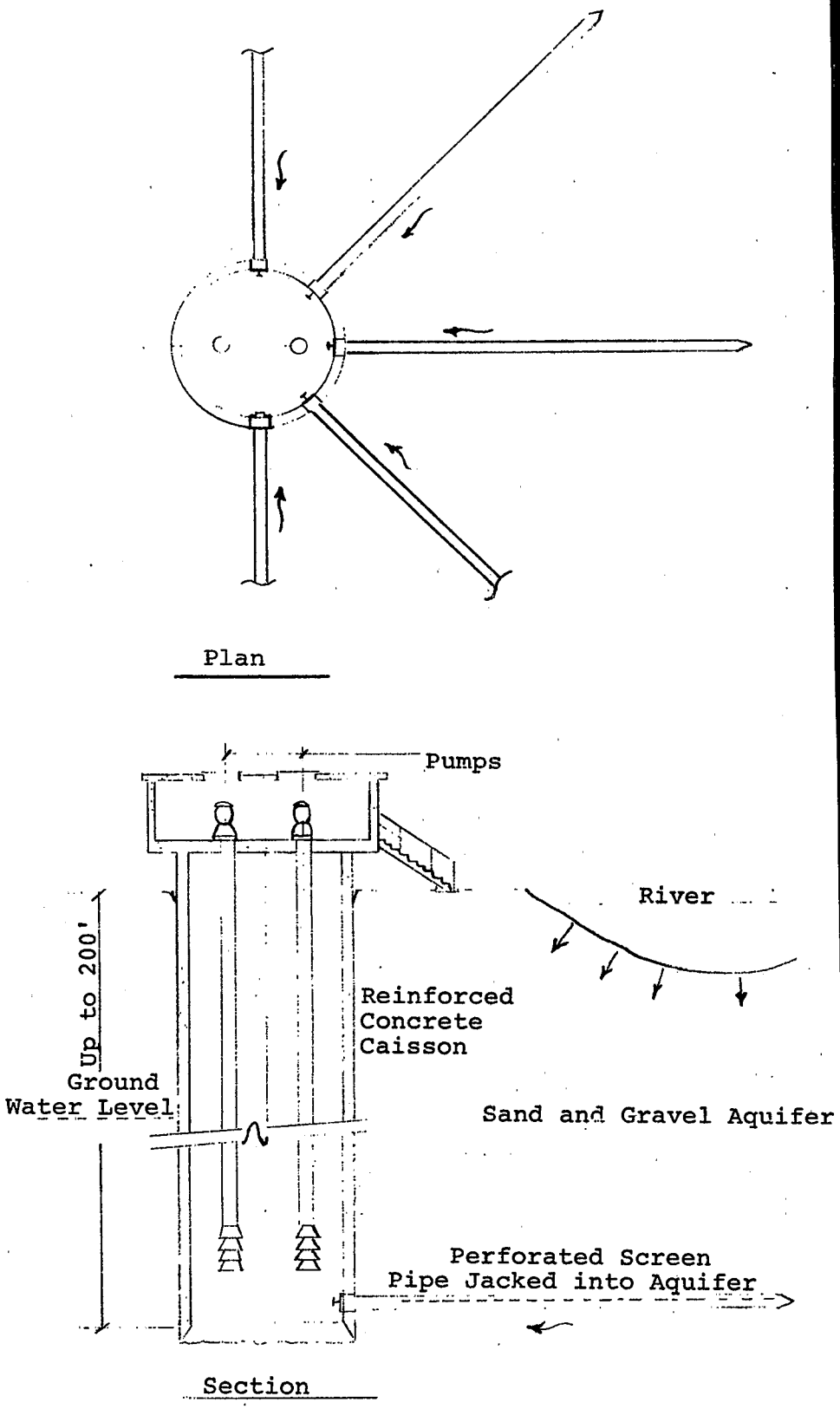

Figure III-63 RADIAL WELL INTAKE

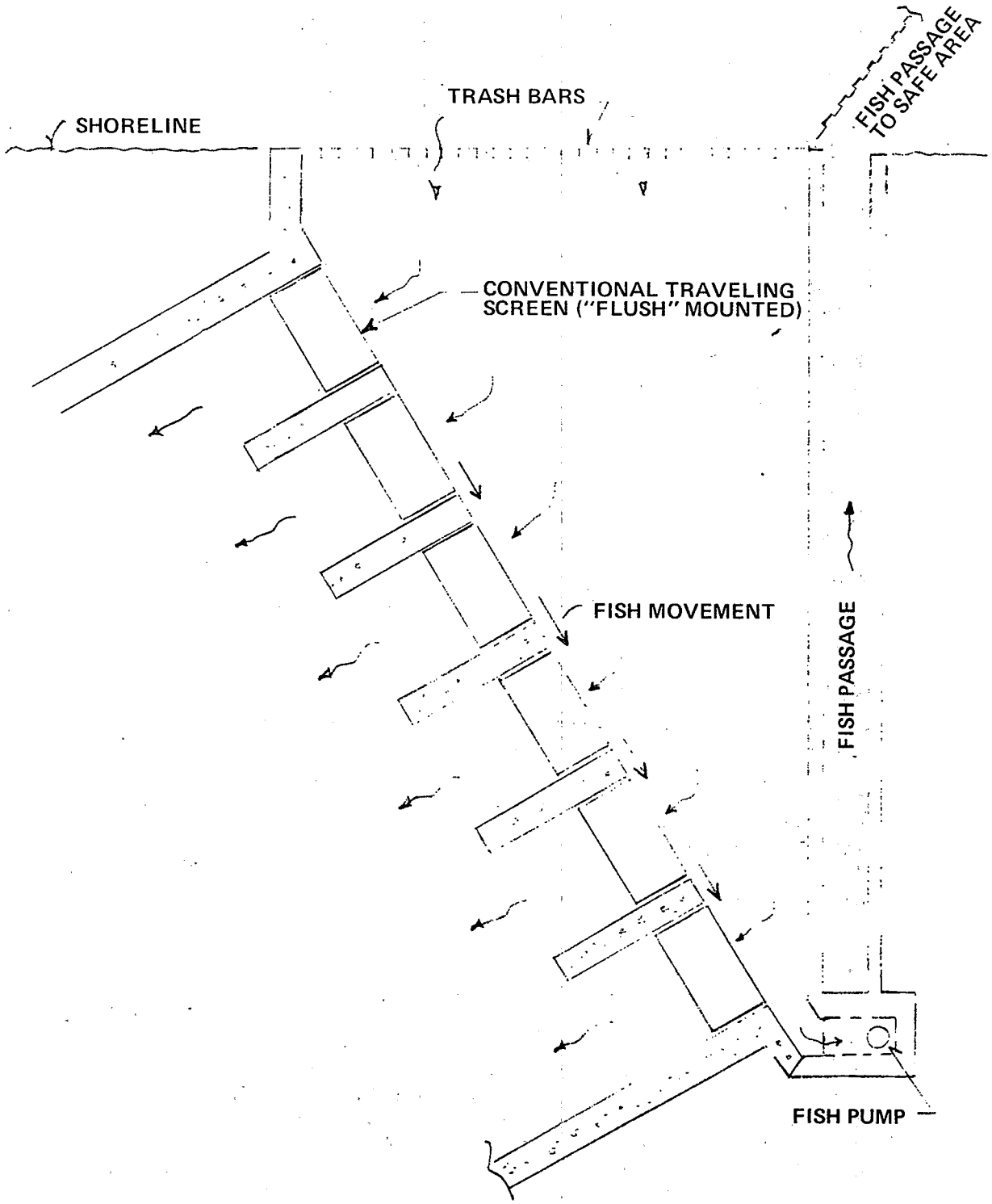

FIGURE III-64 ANGLED CONVENTIONAL TRAVELING SCREENS

the screens to assure a reasonably uniform flow through screens.

Circulating Water Pumps

Mechanical stress of circulating water pumps can be the primary contributor to mortality of organisms withdrawn from the cooling water source. High mortality has been observed in cooling water systems operating during periods of no heat load.[39]

Pumps used in condenser cooling water systems of steam-electric plants typically range in capacity from about 20,000 gpm to 250,000 gpm, and there are usually two to four pumps for each generating unit. Circulating water pumps normally have axial or mixed flow impellers and are of either the wet pit or the dry pit type. Smaller pumps used in steam electric plants may be of the centrifugal type.[34]

Rotating speeds may normally range from 150 rpm for the large, low head pumps to 900 rpm for the lower capacity range. In once-through systems, total dynamic head may range between 20 and 50 feet. In closed-loop systems with cooling towers, higher pumping heads are required. The pump setting and design must be such as to avoid cavitation for all operating conditions. Water velocities at the pump discharge may range between 8 and 12 ft/sec.[34]

Existing Structures

Many existing intake water structures fall under the definition of a cooling water intake structure. Consideration of the factors discussed in this document will be required for existing as well as new structures. It is possible, however, that the cost of modifying an existing intake structure to comply with all of the best technology discussed in this document may exceed the cost of designing and constructing a new intake structure to comparable standards.

In determining the "best technology available" that is applicable to an existing structure, the degree of adverse environmental impact should be considered. An existing structure may be acceptable despite the fact that it does not conform in all details to the criteria recommended in this document if, as a result, environmental damage is minimal. Such an evaluation also is to be on a case-by-case basis and, as in the case of a new structure, the burden of proof is on those owning the structure. An existing intake structure is a structure that was in operation or upon which

construction had commenced as of December 13, 1973, the date of publication of the proposed regulation on cooling water intake structure.

New structures can be expected to incorporate the most advanced technological methods available to minimize adverse environmental impacts. Thus, new structures are expected to conform to the criteria discussed in this document.

SECTION IV

CONSTRUCTION

Introduction

The adverse environmental impact associated with the construction of cooling water intake structures results from three factors. The first of these is that the intake structure may occupy a finite portion of the bed area of the source water body. To the extent that this occurs, there will be a loss of potential habitat and a displacement of the aquatic populations that reside at that location. In addition, modifications to a larger area surrounding the specific intake location resulting from construction activities and changes in existing topography can create permanent disruptions in the biological community.

The second factor is the impact on the ecosystem of increased levels of turbidity resulting from the construction of the intake structure and any associated inlet pipes and approach channels. Turbidity levels can also be increased as the result of erosion of inadequately protected slopes of excavations and fills created during the construction operations.

The third factor concerns the location of disposal areas for the materials excavated during construction. If spoil disposal areas are located within the confines of the source water body, further permanent disruptions of the existing aquatic species can result. If these spoil banks are not adequately stabilized, increased levels of turbidity may persist for an indefinite period. Adequate protection and stabilization of spoil areas located above the waterline are also required to prevent long term erosion of these materials which can contribute to increased turbidity levels.

Of the three factors mentioned above, the first will not significantly impact the environment in most cases . The remaining two factors can create serious short term and long term problems if not properly controlled.

Displacement of Resident Aquatic Organisms

The impact of the physical size of the intake structure on the displacement of the resident biological community is a function of the size of the intake. Offshore intakes which require long conduits placed in the waterbody or wetlands

will be more disruptive to the resident species than shoreline intakes. The species that will normally be most effected by the construction of the intake structure are the benthic organisms. The impact of construction activities in this regard is expected to be small since in no case will the intake structure occupy more than a small percentage of the total area of the source. All water sources should be able to adjust rapidly to the loss of habitat area and to reproduce the small portions of the important organisms lost. If the locational guidelines proposed are followed, the impact of this aspect of intake structure construction will be minimized.

Turbidity Increases

Increased turbidity can result from the construction of intake structures in several ways. First, increased turbidity can result from physical construction activities conducted below the water level of the source. Such activities as dredging, pipe installation and backfilling, and the installation and removal of coffer dams and related facilities can create significant increases in turbidity unless these activities are carefully controlled. The turbidity created by the physical construction of intake structures will normally be limited in duration to the extent of the construction schedule. The impact of this type of turbidity increase on the source ecology is dependent upon the particle size distribution of the sediment, the sediment transport characteristics of the source, and the location of the important organisms with respect to the intake structure construction activities.

There are a number of construction techniques that can be employed to reduce the turbidity increases associated with these activities. Excavation and dredging activities can be conducted behind embankments or coffer dams to contain potential sediment discharges. Care can be exercised to limit the turbidity increases due to the construction and removal of these facilities. Onshore construction can be performed with natural earth plugs left in place to prevent the discharge of material to the source. Construction can be scheduled to take advantage of low water periods and periods of reduced biological activity in the source. Some sources will expose a large portion of the flood plain under low water conditions allowing much of the intake structure to be constructed in the dry area. Construction can also be scheduled around important spawning periods, feeding periods and migrating periods to reduce impact to these functions.

The control of dewatering activities can also be important. The discharge of soil materials from dewatering activities can be limited by the use of holding ponds or filtration equipment prior to discharge of this water to the stream.

All material excavated or dredged in the construction of intakes should be placed above the water line where possible. The laying of conduit can be scheduled to minimize the amount of time that the trench is open. As soon as the conduit is placed, the trench can immediately be backfilled and the surface of the trench smoothed over to prevent erosion of the trench materials.

Long term turbidity increases can result from the entrainment of material from spoil areas located either below the waterline or erosion of material placed above the waterline. In addition, erosion of excavations and fills that are permanent parts of the intake can also add turbidity that will persist long beyond the completion of construction activities. Adequate stabilization of these fills may necessitate rip-rap slope protection and seeding of fill areas.

Disposal of Spoil

The disposal of spoil within navigable waters is controlled by the U.S. Army Corps of Engineers. The disposal of spoil from excavation and dredging activities can displace and destroy important benthic organisms. The disposal of spoil in known fish spawning, nursery, feeding areas, shellfish beds and over important benthic populations can cause permanent loss of important biological species.

SECTION V

CAPACITY

Introduction

Any damage to organisms caused directly or indirectly by the withdrawal of water for cooling purposes constitutes an environmental concern pending the determination of the significance of the damage with respect to the aquatic ecosystem. The death rate of sensitive forms of aquatic biota that pass through a cooling water intake structure can approach 100 percent. However, if the cooling water flow is small relative to the total stream flow, the 100 percent death rate may not result in an adverse environmental impact. Where significant numbers of critical aquatic organisms are destroyed, the adverse impact must be minimized. Thus, the effect of capacity with regard to adverse environmental impact should be placed in the context of the significance of the loss and therefore the degree of adverse impact that results.

Since the environmental risk associated with entrainment is related, in large part, to the volume of the stream flow passing through the cooling water intake structure, reduction of intake volume of flow (capacity) is one of the most effective methods that can be used to reduce the adverse environmental impacts of cooling water structures.

Adverse environmental impacts resulting from damage to organisms withdrawn from the water body and directly attributable to the capacity (volume of flow) of cooling water intake structures may be caused by the following:

1) interaction with the intake structure

2) interaction with the cooling system

3) interaction with the discharge structure

4) interaction with the receiving water environment at the outfall

5) exposure to chemicals added between the intake and the outfall

6) exposure to elevated temperature levels during and after passage through the cooling system

These types of adverse impacts with the exception of (1), can be termed "entrainment" effects. Interaction with the intake structure is discussed at length in Sections III and VI of this document. All of the remaining adverse impacts listed above, with the exception of interaction with the receiving water environment at the outfall and temperature effects beyond the outfall, can be termed "inner-plant" impacts.

Additional types of adverse environmental impacts related to the capacity of cooling water structures are those involving damage to aquatic habitats, as discussed in Section I of this document.

Inner-plant or entrainment impacts affect forms of life small enough to pass through the intake screens intact, e.g., plankton, small invertebrates washed from the nekton, fish larvae, pre-juveniles, and small fishes. Inner-plant damage that may be incurred is due to velocity and pressure differentials, temperature changes, changes in dissolved oxygen concentrations, and the presence of biocides and other chemicals.

The velocity of water flow increases at certain points as it passes through a cooling system. The high velocity can cause organisms to strike against various parts of the system, particularly the ends of the heat exchanger (e.g., condenser) tube head boxes and thereby to suffer impact and abrasion damages and shock. Velocity gradients within the system also can exert strong shearing forces on entrained organisms.[35]

In an operating plant, the cooling water temperature increases suddenly as it passes through the heat exchangers tubes, thereby exposing entrained organisms to the potential hazard of thermal shock. Dissolved oxygen also may be reduced adding further stress. Chlorine may produce some mortality or suppression of metabolic acitivity to organisms that pass through the plant cooling system. Some mortality of entrained organisms may result from mechanical, thermal and osmotic stresses as the discharge plume mixes with the receiving water environment.

Fishes

While entrainment effects also may occur in plants with once-through cooling located on oceans and fresh water bodies, the problem is especially important with high volume intakes in estuaries. In these unique waterbodies a substantial number of critical aquatic organisms are

vulnerable to inner-plant and screen kills. Estuarine species typically have suspended young stages that are vulnerable to entrainment and are concentrated in limited areas within the estuary.[35] It is the high productivity of estuaries that supports many commercially valuable fishes and invertebrates. For example, it has been estimated that 63 percent of the Atlantic commercial catch of fishes and invertebrates is made up of estuarine dependent species.[39] Inner-plant damage may be the most serious impact of estuarine-sited power plants with once-through cooling.[35]

The potential of estuarine plants for massive kills is well demonstrated by a study of the U.S. Environmental Protection Agency at plant No. 2525. In 1971, EPA scientists, estimating inner-plant kills, found that: larval menhaden were killed on passage through the plant and that hydrostatic, mechanical shearing forces appeared to be the cause. The highest calculated kill was 164.5 million menhaden in one day--July 2, 1971. On other days in 1971, the kills (which also involved some river herring) ranged from seven to 28 million per day.[35]

In most estuaries, a high proportion of important fish species are vulnerable to entrainment and inner-plant damage when they are young and swim weakly and are living a pelagic or planktonic life suspended in the water. For example, 19 fish species of the James River estuary have been identified as being subject to entrainment at plant No. 5111.[35]

Calculations made of the significance of the inner-plant kills in plants located on estuaries show a high proportion of the total population to be affected. For example, at Plant No. 0904, it was found that: "An impressive number of these larvae were entrained through the plant so that by mid-June, a total of 2.5 million or almost one-half of the maximum larval population in (Niantic) Bay had been entrained. If the survival of entrained flounder larvae is low, then it is apparent that Unit 1 may do considerable damage to the flounder population in the area around Millstone Point."[43]

The U.S. Atomic Energy Commission staff analysis for Plant No. 3608 (Reference 8h) showed that: "...during June and July of most years from 30 to 50 percent of the striped bass larvae which migrate past Indian Point from upstream spawning areas are likely to be killed by entrainment.... In addition, large numbers of older striped bass will be killed by impingement. The combined effect of these two sources of mortality will decrease recruitment to the adult population of striped bass which depend upon the Hudson

River for spawning. As a result, there is high probability that there will be an initial 30 to 50 percent reduction in the striped bass fishery which depends upon the Hudson for recruitment."

The staff later refined the estimates using simulated rates of flow for various years, included the effects of other power plants on the Hudson Estuary that would entrain young striped bass and found that as high as 64 percent of the year's production of young bass would be killed (8h).

The striped bass (or rockfish) is threatened throughout its range by power plants. In every major breeding area there is now a power plant or one is proposed or probable--the Hudson, Upper Chesapeake-Delaware, Potomac, James, Patuxent, Sacramento-San Joaquin.[35]

The striped bass is among the most valuable of Atlantic coast species of fishes, each year supplying a commercial catch of five to ten million pounds[45] and recreational fishery valued at around $150 million. It is also of great value on the Pacific coast, particularly in the San Francisco Bay area where it furnishes the most important sport fishery.[45]

Because of the peculiarities of its life cycle, the striped bass is especially vulnerable to damage from power plants sited in estuaries. Throughout its range of occurrence the species is vulnerable not only to direct damage but to undermining of the complex web of life that provides its food resources.[35]

Microbiota

All planktonic life of the water, all the suspended microflora and microfauna, are potentially subject to the same impacts from passage through a plant cooling system that have been described above for fish larvae and juveniles. However, research shows that planktonic plants (algae or phytoplankton) and invertebrate animals (zooplankton) are more resistant to damage than the fishes because, with some exceptions, their populations appear to be less affected by the shocks of plant passage. It is important to protect the planktonic microbiota because it supplies the foundation of nourishment for the whole chain of life in the estuary and because it includes the young, the larvae and juvenile stages, of valuable species of shellfish.[35] A more detailed discussion of entrainment impacts on microbiota is given in Reference 35 and a portion

of that discussion is given in the Appendix of this document.

Reduction of Cooling Water Intake Volume

Reduction of cooling water intake volume (capacity) should, in most cases, reduce the number of organisms that are subject to entrainment in direct proportion to the fractional flow reduction.[35, 46] Figure V-1 shows the beneficial effect of reduced intake water volume on fish impinged or entrained on the intake screens (8g 35).

Intake flow volume reduction can be achieved by two basic means: (a) maintain a non-recirculating (once-through) cooling system but reduce flow through the system; and (b) adapt a recirculating (closed-cycle) cooling arrangement. These means can be applied simply or in combination, and continuously or interchangeably throughout the year.

In particular, the EPA Development Document for Effluent Limitations Guidelines and New Source Performance Standards for the Steam Electric Power Generating Point Source Category (October 1974) should be referred to in determining the methodology, efficacy and cost of a recirculating cooling arrangement. (Reference 38.)

Since cooling systems must accept a predetermined amount of waste heat, reduction in once-through flow volume must of necessity be accompanied by a corresponding proportional increase in coolant temperature rise through the system. Figure V-2 shows the cooling water requirements for fossil-fuel and nuclear powerplants as a function of the coolant temperature rise. For example, the highest design temperature rise for a powerplant is 45°F (Plant No. 3306). In this particular case, the relatively low cooling water intake flow volume design for this once-through system was created to economize on the size of pipes and pumps needed to transport cooling water over two miles from the water source to the plant. The intake water volume corresponding to a 45°F temperature rise could be about 20 to 50 percent of the intake water volume required for power plants with a temperature rise in the normal range (about 10 to 20°F). Offsetting the environmental benefits of intake capacity reduction by this means are the possible adverse environmental impacts of the higher temperature rise through the cooling system with respect to inner-plant impacts and effects of the discharge on the receiving water environment.

"Helper" cooling means are employed at some power plants to reduce cooling water discharge temperatures to meet

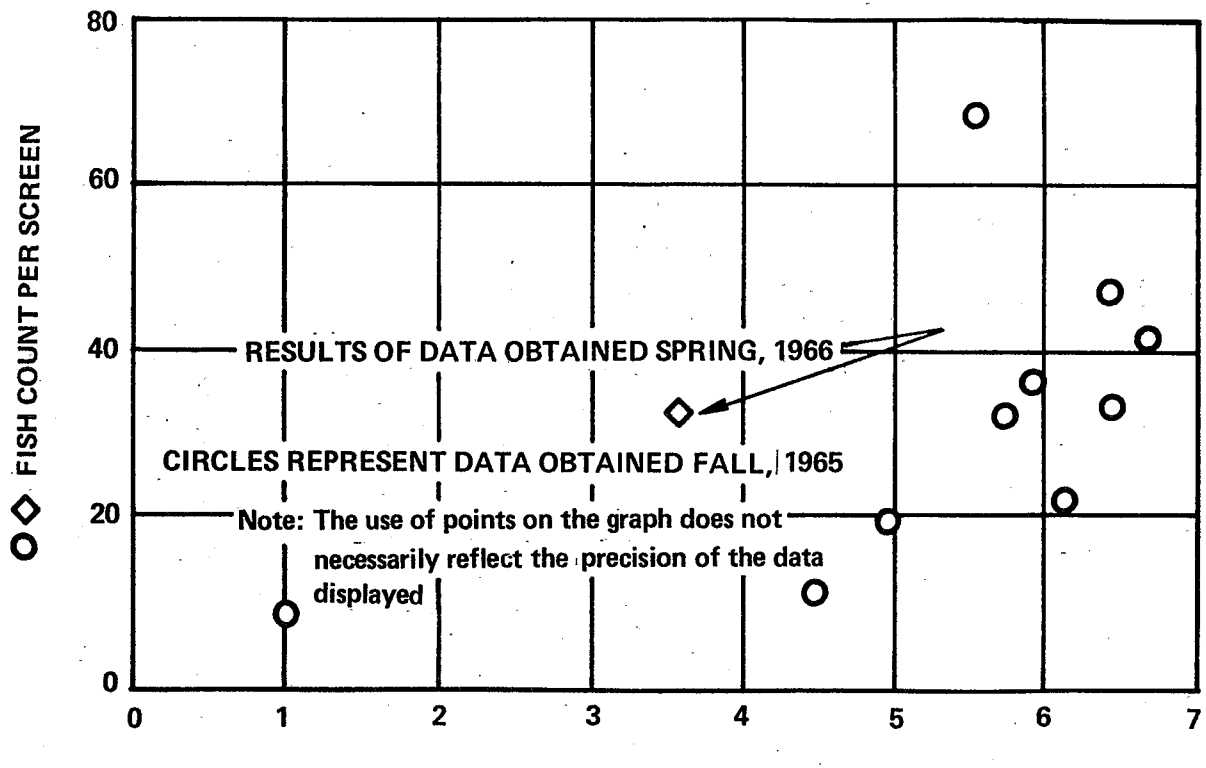

FIGURE V-I FISH COUNT VS. INTAKE FLOW VOLUME (CAPACITY)
(References 8g and 35)

Figure V-2

COOLING WATER REQUIREMENTS FOR FOSSIL AND NUCLEAR POWER PLANTS[48]

--- NUCLEAR, $\eta_t = 33\%$, IN-PLANT LOSSES = 5%

—— FOSSIL, $\eta_t = 40\%$ IN-PLANT AND STACK LOSSES = 15%

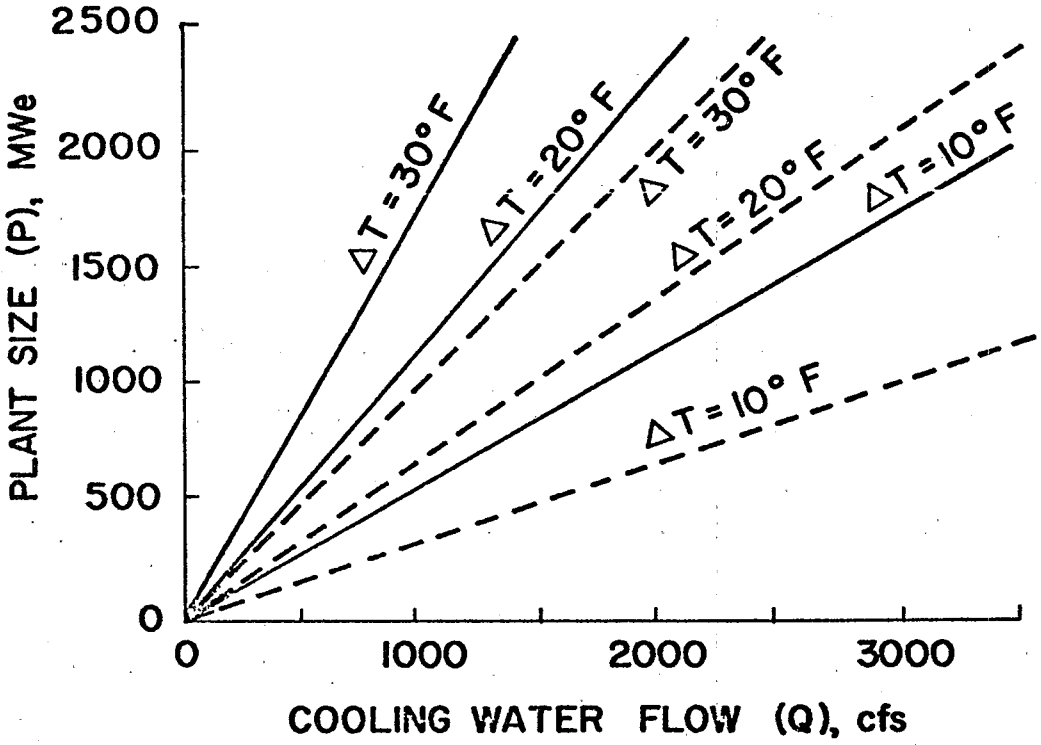

ΔT = CONDENSER TEMP. RISE

η_t = PLANT THERMAL EFFICIENCY

limitations based on protection of aquatic life in the receiving water. Examples of cooling means that are or could be employed as "helpers" are cooling towers, unaugmented and augmented (spray) ponds and canals. Dilution pumping also can be used to reduce discharge temperatures. However, cooling towers, ponds and canals have potential non-water quality environmental impacts such as noise, fogging and drift, which are discussed in detail in Reference 38.

The reduction in damage to aquatic organisms is in proportion to the reduction in intake cooling water flow volume (capacity) and closed-cycle cooling systems generally require 2 to 4 percent of the intake cooling water flow of once-through systems. Although all organisms withdrawn may be killed in typical closed-cycle cooling systems, there is strong evidence that a high proportion of fish that go through open-cycle power plants are also killed. For example, studies have shown that 80 percent of the fish going through power plants with once-through cooling are killed by abrasion, turbulence, shock and other mechanical effects while the other 20 percent are killed by the high temperature.[35] Damage to organisms due to intake screen effects could be significantly less for closed-cycle systems than for once-through systems.

Combination cooling systems have been employed to operate in open-cycle (once-through) and closed-cycle modes interchangeably. Reference 8ee describes the various modes of circulating water and cooling tower operation for the power plant as follows:

> Open cycle - The open cycle operation does not utilize the cooling tower system. Water is withdrawn from the river, passed through the main condenser system and returned to the river via the discharge canal.
>
> Helper cycle - In this mode, all or a portion of the circulating water is diverted to the cooling tower system after passing through the main condenser. The remainder of the water is discharged directly. All of the water withdrawn is returned to the river with the exception of the evaporative losses that occur in cooling tower operation.
>
> Recirculation cycle - In this mode, it is necessary to withdraw from the river only a portion of the total circulating water flow. The balance of the circulating water flow is provided by an inventory of water maintained and recirculated through the system. The

water withdrawn, less the cooling water evaporative losses, is returned to the river.

Closed cycle - In this mode of operation, the maximum quantity of water is recirculated through the system. Some withdrawals from the river are still required to replace that lost by evaporation and that required by blowdown. The blowdown water is returned to the river.

It is known that in at least one case the owners of a large nuclear powerplant have agreed to backfit an offstream (closed-cycle) cooling system on a plant originally designed for once-through cooling in order to minimize adverse environmental impacts caused by the high cooling water flow volume (capacity) required by the once-through system. 8dd,[41]

SECTION VI

OPERATION AND MAINTENANCE

Introduction

The environmentally related performance characteristics of a cooling water intake structure will be primarily established by the location, design and capacity characteristics discussed in the previous sections. Relatively little can be done by the application of appropriate intake operational measures to significantly reduce adverse environmental impact. This results from the fact that during operation the intake is the passive portion of the cooling water system, which simply supplies the water demand of the plant. The only portions of the intake structure that can be "operated" are the pumps and the screens.

The development of a continuing performance monitoring program might be of some value in determining desirable operating conditions.

Maintenance is an aspect of intake structure operation which can reduce adverse environmental impacts. Good maintenance will require an effective program of preventive maintenance for both above water and below water portions of the intake.

Operation

Many conventional traveling screens are operated once during each eight hour shift. During periods of high debris loading in the water source, screens may be operated more frequently and in some cases continuously. Pump operation is directly controlled by the water demand from the plant. Little flexibility in the operation of either of these systems is possible.

Screen Operation

The data available on screen operation suggest that, under certain conditions, continuous operation of the screens can reduce impingement effects. This is due to the fact that, with continuous screen operation, fish would be impinged for a shorter period of time. One of the primary reasons for this is that fish typically tend to fight a situation which they recognize as perilous such as being impinged on a

screen or being lifted out of water. The longer a fish is allowed to fight such a situation, the more likely it is to damage itself.

Continuous screen operation to reduce impingement effects is only effective where fish separation and bypass systems are available. The number of installations having this capability is small. Continuous screen operation will shorten screen life and increase maintenance costs to some degree.

Pump Operation

Control of pump operation has been used at certain powerplant once-through cooling water intakes (plant no. 3608) in the northern latitudes to reduce impingement effects during the winter months. This type of control involves the reduction of the volume of water pumped during these cold water periods. Pump flows can be reduced without detrimental effect on plant performance if water temperatures are low enough to compensate for the reduced volume of cooling water.

Since fish swimming ability for many species is drastically reduced at low water temperatures, a flow reduction in the winter period can effectively reduce fish impingement. The best way to reduce water flow is to reduce the pump speed. This can only be done where pumps have variable speed drives. Unfortunately, most circulating water pumps do not have variable speed capability. Other methods of flow control include valve throttling, shutdown of one or more pumps in multiple pump installations and bypassing some of the pump discharge back into the pump well via suitable bypass piping.

On new structures the effects of a reduced number of pumps operating in winter should be evaluated and considered in the overall initial design.

Recirculation

In this method each pump is operated at its normal capacity, however, a percentage of the pump discharge is recirculated through a pipe loop to a point in the intake bay just behind the screen. Thus, flow through the screen to the condensers is reduced. Recirculation can be employed only during periods of anticipated need, however, the results of the increased discharge temperature should be considered. [36]

Performance Monitoring

The development of a continuing performance monitoring program in conjunction with the operation of intake structures would be helpful. The data developed on the performance of various intake systems under different regional conditions could be used to develop a base on intake performance. This would allow the effectiveness of individual intake structure characteristics to be determined and facilitate the periodic updating of the documented state-of-the-art.

The following type of data might be included:

- Source water temperatures
- Stream flows (where applicable)
- Screen operaton schedules
- Cooling water flow
- Number, types and condition of important organisms impinged, entrained, and bypassed.

Maintenance

An effective preventive maintenance program can be developed for both below water and above water portions of the intake structure.

The maintenance of the above water portion of the intake will basically consist of the maintenance of the mechanical equipment associated with the intake. This equipment includes primarily the screens and screen drives, the trash racks and supporting equipment.

Suggested preventive maintenance procedures are normally supplied by the manufacturer of the various systems. This program consists of regular lubrication schedules for all moving parts and a firm inspection program to check key wear points, particularly screen basket lugs, headshaft lugs, carrying chains, etc. Inspection of the spray wash system can be made on a regular basis with particular emphasis on the condition of the spray nozzles. The water screen can be tested for binding and misalignment on a monthly basis by operating the screen for several revolutions with the test shear pin left in place. Adequate maintenance procedures also require the stocking of a spare parts inventory because of long lead times which generally exist on spare parts deliveries. The suggested list of spare parts will generally be supplied by the equipment manufacturer.

Preventive maintenance of the portion of the intake below the water line is important and often neglected because it

usually requires the dewatering of the individual intake bays and/or use of divers. Below water maintenance can include visual inspection of footwells and footwell bushings on an annual basis. This may require a diver if the well cannot be dewatered or the screen cannot be raised. In addition, periodic below water inspection of the intake can reveal the extent of the following adverse conditions as noted in Reference 4:

- Silt accumulation in front of the structures which can effect intake hydraulics.
- Undermining of the base of the structure which might cause subsequent collapse of the structure.
- Deterioration of stop log and screen guides.
- Spalling concrete which may expose reinforcing bars and weaken the structure.
- Damage to pump impeller and fittings which can lead to pump failure.

SECTION VII

COST

Introduction

This section contains cost data relating to cooling water intake structures. The section is organized to first present current costs for the construction of the several types of conventional intake structures commonly used by industrial establishments. This is done to establish a baseline against which the additional costs associated with the implementation of the environmental control measures can be compared. Following the development of this baseline cost data, estimates are made of the costs associated with certain intake structure environmental control measures.

The cost data contained in this section are capital costs associated with intake structure construction only. No consistent data on operation and maintenance of cooling water intakes are available. Records of these costs are not routinely kept by either the users or the manufacturers of intake structure equipment. The magnitude of costs associated with operation and maintenance of cooling water intake structures are estimated to be small compared to capital costs.

A further qualification of the data contained in this section is required. The scarcity of detailed data on the constructed cost of intake structures was a major problem area in the development of this document. This lack of data results from the fact that most intake structures are constructed as part of a larger general contract which includes other structures on the site, and in some cases, the complete plant. It is difficult in these cases to separate the portion of the costs that are directly associated with the intake structure either from the bid package or from field records of the cost of construction put in place. It was necessary therefore to synthesize the cost data available from several sources. In doing this, the costs of intakes constructed at different dates and in different geographical areas of the country are combined without normalization of the data with respect to either inflationary factors in the construction market or well established regional cost differences. The cost data presented must therefore be considered to be order of magnitude costs and should be used in this context only.

Cost of Construction of Conventional Intake Structures

The cost of conventional intake structures is influenced by both the type of intake and the size of the intake facility. The cost of the major piece of mechanical equipment in the intake, the traveling water screen, contributes a relatively small portion of the total intake structure cost.

Screen Costs

The costs of furnishing and installing intake water screens are readily available from any of the leading screen manufacturers. Table VII-1 is a tabulation of the cost of 16 conventional traveling water screen installations provided by a leading screen manufacturer during 1971. These costs have been converted to a unit flow basis and the results tabulated in the next to the last column of the table. The approach velocity for each installation is recorded in the last column. The factors that most directly affect the cost of the screens are the approach velocity and the size of the plant. The total range of screen cost was from $2,000/cu m/s ($0.13/gpm) to $37,400/cu m/s ($2.36/gpm). The effect of approach velocity was pronounced with the average unit cost for installations where approach velocity exceeded 0.3 m/s (1 fps) being $5,200/cu m/s ($0.33/gpm) compared to a cost of $16,600/cu m/s ($1.05/gpm) for installations where the approach velocity was less than 0.3 m/s (1 fps). The variation with the size of flow was even more significant. The cost of large screening units (greater than 6.3 cu m/s (100,000 gpm) per screen) averaged $3,200/cu m/s ($0.20/gpm) as compared to $17,400/cu m/s ($1.10/gpm) for smaller units (less than 3.2 cu m/s (50,000 gpm) per screen).

Intake Structure Costs

Estimated cost data for the three different types of intake structures are shown in Figure VII-1. These data were taken from Reference 11 for small powerplants and from estimated costs of individual large powerplants from various sources. The base year for these cost data is 1971. The figure demonstrates the two important cost impacting factors in conventional intake construction. The first of these is the type of intake used. The offshore intake will cost significantly more, in all size ranges, than either the shoreline intake or the channel type. The basic reason for this is the cost of excavation and laying of offshore conduit. The cost differences between the channel type of intake and the shoreline intake appear to be small except in the lower size ranges.

Table VII-1

COST OF TRAVELING WATER SCREENS (1971)

Plant Code No.	Number of TWS	Basket Size (m)	Centers (m)	Type of Water	Flow per TWS m^3/s	Design Low Water Depth m	Frame (No Posts)	Approx. Cost $	Unit Cost $\$/m^3/s$	Velocity m/s
4709	6	4.27	17.98	Fresh	11.91	8.53	4	228,000	3,200	0.326
1243	1	1.52	7.01	Fresh	.94	1.68	2	16,000	17,000	0.369
4817	4	2.13	9.75	Salt or Brackish	4.50	5.18	4	120,000	6,700	0.409
N.A.	6	3.05	11.58	Fresh	7.91	6.70	2	144,000	3,000	0.387
4001	4	3.05	10.58	Fresh	5.36	5.49	2	84,000	3,900	0.320
4829	3	3.05	13.72	Salt	8.14	6.25	2	87,000	3,600	0.427
N.A.	2	1.52	5.18	Salt	1.03	2.74	4	33,000	16,000	0.244
2110	1	3.05	31.39	Fresh	4.72	5.79	4	49,000	10,400	0.268
1003	8	3.05	10.97	Fresh	3.20	6.19	2	197,000	7,700	0.171
1731	3	3.05	11.89	Fresh	8.63	8.53	2	53,00	2,000	0.332
1002	2	3.05	6.40	Brackish	2.90	3.05	2	30,000	5,200	0.305
0616	1	3.05	9.45	Salt	6.93	4.11	2	29,000	4,200	0.549
0108	3	2.44	19.81	Fresh	2.19	5.33	4	93,000	14,200	0.168
0109	2	2.74	10.06	Fresh	0.69	4.72	2	52,000	37,400	0.052
N.A.	6	3.05	8.84	Salt	1.73	3.35	2	137,000	13,200	0.168
N.A.	1	1.78	11.58	Salt	1.26	2.40	2	23,000	18,300	0.290

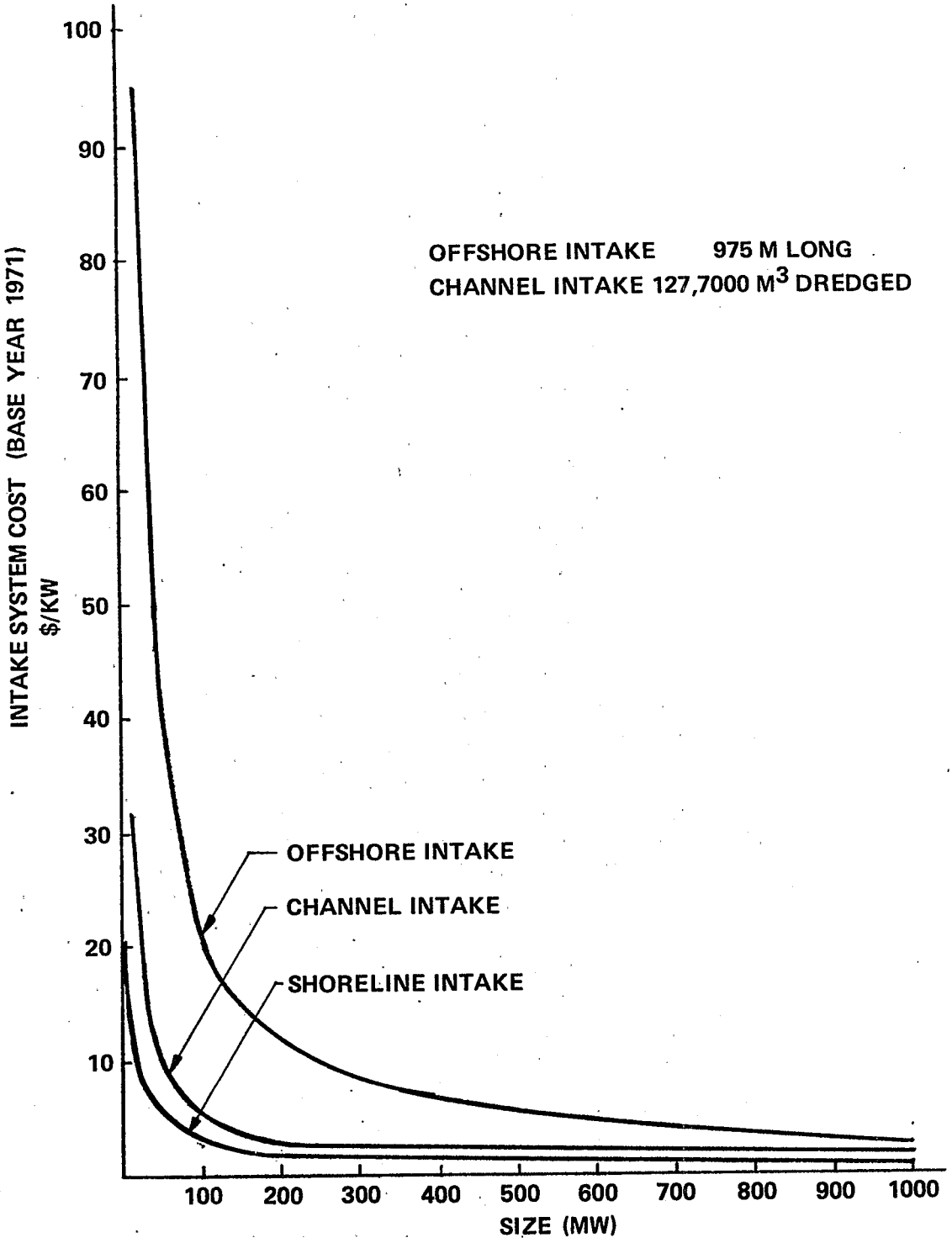

Figure VII-1 COST OF INTAKE SYSTEMS

The other significant cost factor is the size of the plant. The cost of construction of all three types of intakes are shown to be significantly higher for smaller plant sizes than for larger powerplants. For instance, the costs of offshore intakes are shown in Figure VII-1 to vary from as low as $3/kw of installed electrical generating capacity for a 1000-Mw plant to as high as $90/kw for plants under 10 Mw.

The data contained in the figure have been standardized on the basis of significant cost factors. The length of pipe used in the development of the curve for offshore intakes was 975 m (3200 ft). Likewise, a constant 127,700 cu m (167,000 cu yds) of excavation was assumed for all channel intakes. The amount of these items and their costs can vary significantly. Reference 24 shows the costs of three offshore intakes constructed between 1955 and 1958. The cost of installation of the offshore piping for these powerplants varied from as low as $2.16 to $4.70 per kw installed. Caution is therefore suggested in the use of this figure. Costs of each type of intake can vary considerably from the curves shown.

Additional data on the cost of shoreline intakes are contained in Table VII-2. The table contains cost data on five cooling water intake structures and four makeup water intake structures constructed after 1965. With the exception of three makeup water structures the cost data contained in the table represent construction actually put in place. The costs of the three makeup water intakes are detailed cost estimates since these plants are now still under construction. The cost data contained in the table are substantially the same as in Figure VII-1. The cost of shoreline intakes ranges between $1-$4/kw for the larger size powerplants. The cost differences between makeup water systems and circulation water systems do not appear, from the table, to be as great on a $/kw basis as the difference in intake flow volume would indicate. The cost data, on a flow basis, appear to range from $40 to $90 per gpm of flow for makeup water intakes and from $6 to $30 per gpm of flow for circulating water intakes. For both these types of systems the upper cost ranges are for nuclear powerplants. The nuclear service intakes, although pumping much smaller volumes of water, are becoming as large as the circulating water intakes in order to accomodate backup equipment, provide missile protection and insure operation under maximum probable storm water flood and drawdown levels. The data presented in Table VII-2 can be compared to the screen cost data on the basis of $/cu m/s ($/gpm). It can be seen that the cost of the screens is a relatively small portion (less 1-2%) of the intake structure cost. The bulk of the

Table VII-2

COST OF SHORELINE INTAKES

Plant Code No.	Intake Flow m^3/s	Total Cost $	Unit Cost $\$/m^3/s$	Unit Cost $/kw	Comments		
					Plant Fuel	Intake Type	Year Commissioned
5404	1.26	466,000	369,800	0.40	Fossil	Makeup	1965
5309	1.58	2,000,000	1,265,800	1.82	Nuclear	Makeup	1976
4213	1.58	2,500,000	1,582,300	1.37	Nuclear	Makeup	1975
3407A	2.27	5,000,000	2,202,600	4.17	Nuclear	Makeup	1977
3407	20.79	1,000,000	48,100	1.78	Nuclear	Circulating Water	1965
3805	4.85	400,000	82,500	1.67	Fossil	Circulating Water	1966
Unit 1 3805	5.67	950,000	167,500	2.26	Fossil	Circulating Water	1973
Unit 2 3601A	20.79	4,800,000	230,900	4.00	Fossil	Circulating Water	1972
3113	20.16	8,700,000	431,500	11.18	Nuclear	Circulating Water	1972

cost of intakes is associated with structural features, and is relatively independent of equipment costs, at least for conventional intakes.

Typical rule of thumb estimating guides for intakes are the following:

- Water screens cost approximately $11/sq m ($1.00/sq ft) based on screen surface with a range of $5.50 to $24.22;sq m ($.50 to $2.25/sq ft).

- The cost of construction of offshore pipeline per unit length can vary from as low as $500/m ($150/ft) for small makeup water lines to as much as $6,600/m ($2,000/ft) for large makeup water lines.

- The cost of shoreline intakes will average approximately $11,000/sq m ($1,000/sq ft) based on the cross-sectional area of the screens.

- Shoreline intakes will also vary from between $140 to $424/cu m ($4 to $12/cu ft) of structure enclosed beneath the operating deck with a mean of $212/cu m ($6/cu ft).

Implementation Costs

Locational Measures

Locational measures could potentially have a significant cost impact. In particular, where locational measures involve extensive offshore piping, the intake cost can increase significantly. Costs of offshore piping have been detailed above, and it is shown that the cost of this work can increase the intake cost significantly.

The choice of intake location, while a potentially available technology to some degree for all industrial sources for controlling the number and types of interaction with the intake, could be more costly in the case of relocating an existing intake, than applying a recirculating cooling system to minimize or eliminate cooling water flow. In general, the incremental costs associated with choice of intake location or application of recirculating cooling systems to control the number and types of organisms interacting with the intake would be less for a new source than for a similar existing source.

Design Measures

The design measures that will increase costs significantly are those that involve a reduced approach velocity and flush mounting of the screens. The changes that could be involved are shown in Figures VII-2 and VII-3. Figure VII-2 is based on the design of a hypothetical shoreline intake structure without the modifications required to reduce the approach velocity and incorporate flush mounting of the screens. The unmodified design provides an approach velocity of 0.6 m/s (2 fps) with screens set back from the front face of the intake. The modified design (Figure VII-3) employs an approach velocity of 0.15 m/s (0.5 fps) with screens set at the front of the intake and fish passageways provided between the screens and the trash racks. The total intake flow-per-bay is approximately 10.1 cu m/s (160,000 gpm) at maximum pump runout conditions. The intake would draw an average of 15.8 cu m/s (250,000 gpm) using two bays with the third bay acting as a spare. This flow is equivalent to the circulating water flow for a fossil-fired plant with a capacity of approximately 300 Mw.

The major changes involved include the increasing of the volume of the intake structure below the operating floor from approximately 1190 cu m(42,000 cu ft) as shown in Figure VII-2 to approximately 2040 cu m (72,000 cu ft) as shown in Figure VII-3. The cost increase involved in making these changes are shown in Table VII-3.

The total cost increase involved in making these changes is shown in the table to be approximately $182,000 or roughly 70% of the cost of the unmodified intake.

In addition, the larger structure requires more dredging and the construction of a sheet pile retaining wall upstream and downstream of the intake to provide continuity to the "flush-face" intake, and to facilitate flow through the fish passage between the trash rack and traveling screens. The estimated cost for the additional work (dredging and retaining wall) is $90,000.

The estimated cost of modifying the traveling water screens to incorporate fish handling and bypass systems as discussed in the design section of this portion of the report is between $15,000 and $20,000 per bay depending on the screen size. An equivalent amount could be required to provide the additional screen wash systems and bypass systems required.

Capacity Measures

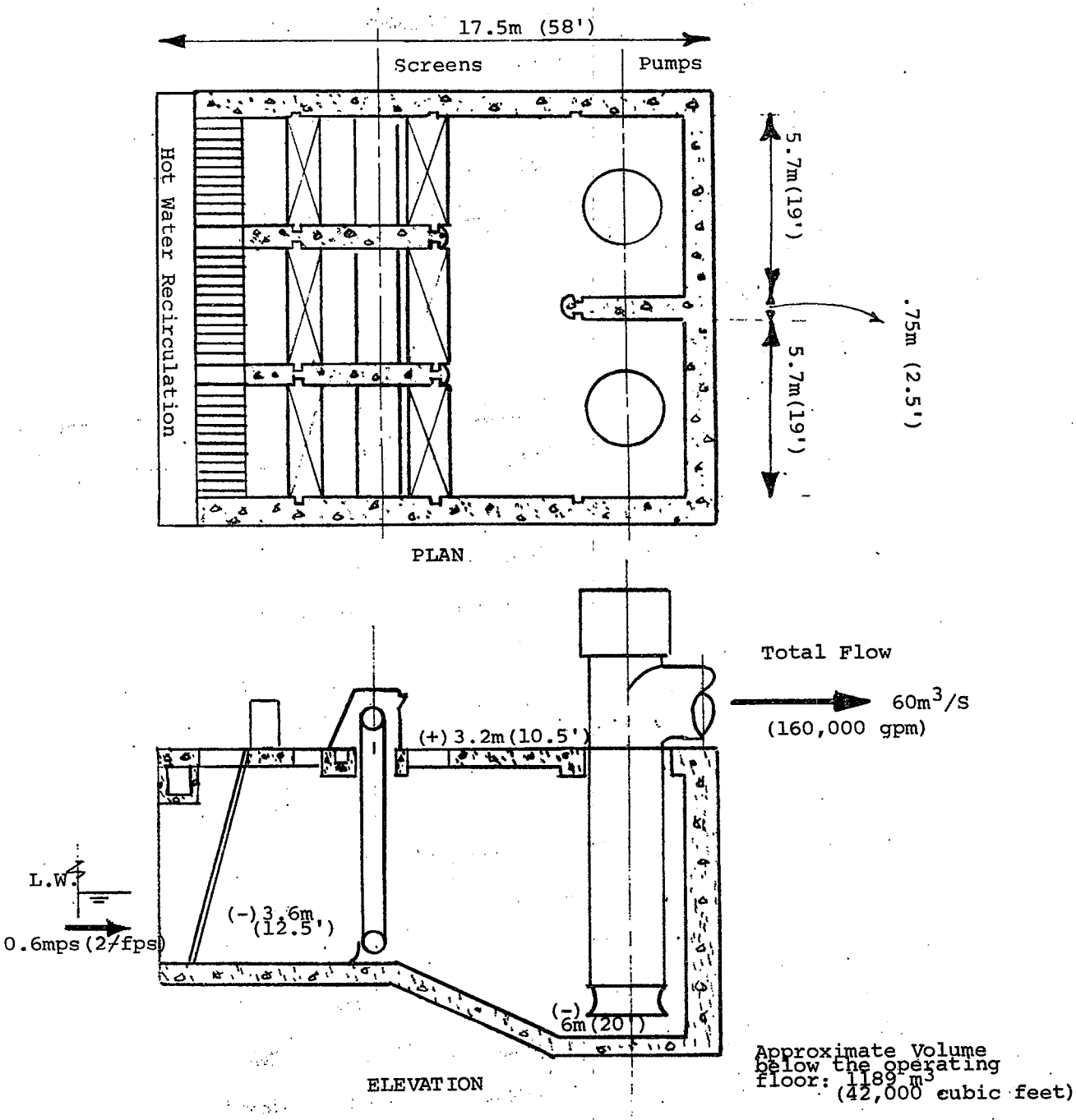

DESIGN OF CONVENTIONAL INTAKE

Figure VII-2

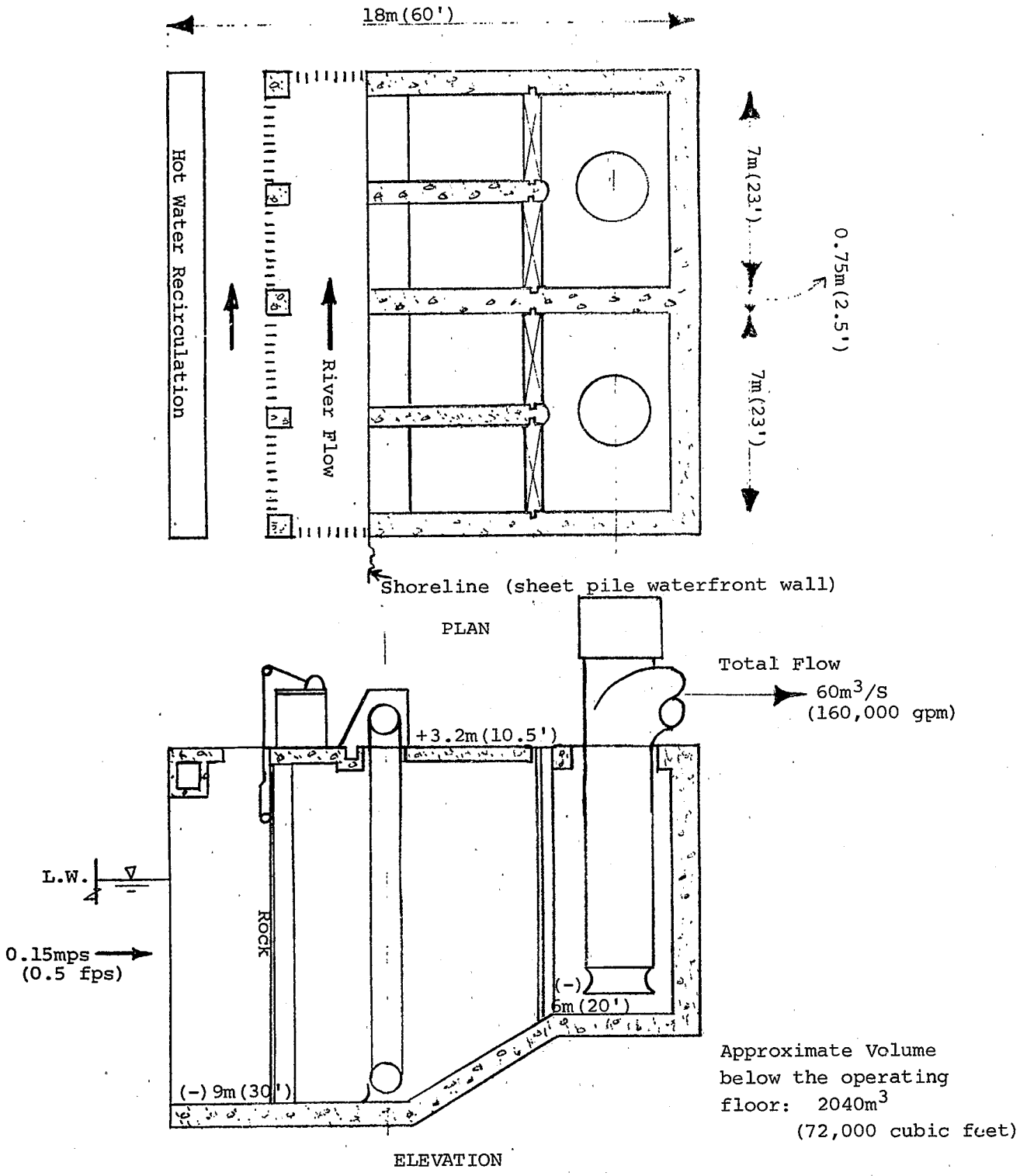

Figure VII-3 DESIGN OF MODIFIED CONVENTIONAL INTAKE

Table VII-3

COST ANALYSIS - IMPLEMENTATION OF EXAMPLE DESIGN REQUIREMENTS

Component	Unmodified Intake Cost	Modified Intake Cost
Structures	$ 189,000	$ 324,000
Racks	17,000	38,000
Traveling Screens	54,000	80,000
Total	$ 260,000	$ 442,000

Costs for reducing the capacity (flow volume) of cooling water intake structures increase in relation to the magnitude of the capacity reduction imposed. The available technology for achieving significant capacity reductions for steam electric powerplant main condenser cooling water includes the use of closed-cycle external cooling means such as cooling towers, ponds, etc. The capabilities, limitations and costs of employing external cooling means at steam electric powerplants are described in detail in Reference 38.

Costs - Other Measures

There will be additional costs for measures related to construction and performance monitoring. The costs of these measures are indeterminable at this time, but are not believed to be significant.

Nonwater Quality Impacts

Energy requirements of available control technologies would be significant in individual cases, only in relation to the extent that certain types of recirculating cooling water systems were employed to minimize or eliminate the use of cooling water. For recirculating cooling water systems, the energy and non-water quality impacts are discussed in detail in reference 38.

Energy requirements and nonwater quality environmental impact of all other available technologies are not known to be significant.

SECTION VIII

SUMMARY

Introduction

This section summarizes the findings of the previous sections on background, location, design, construction, capacity and operation and maintenance of cooling water intake structures. The variations of available technology, intake conditions, site location, and plant capacity are large and the best technology available must be decided on a case-by-case basis. The format for this section summarizes some of the various factors involved. The technologies discussed herein were prepared to assist in the evaluation, on a case-by-case basis, of the best technology available for minimizing environmental impacts.

Adverse Environmental Impacts

Adverse environmental impacts that could occur from cooling water intakes relate to the damage or destruction of benthos, plankton and nektonic organisms by interaction with the industrial cooling system. Important aspects of the intake which relate to adverse environmental impact are the intake volume, the number and types of organisms which interact externally with the intake or which interact internally with the industrial cooling system, the configuration and operational characteristics of the intake and plant cooling system, the thermal characteristics of the cooling system, and the chemicals added to the cooling system for biological control.

The above impacts are highly site-specific. Therefore, adequate biological data would be needed in each case to determine the specific need and control strategy related to minimizing environmental impact.

Available Technology

The range of technologies corresponding to the control of the number and types of organisms which interact externally with the intake is comprised of two factors - the choice of the location of the intake relative to the location of the organisms; and the full array of process modifications including the use of recirculating cooling water systems employing offstream means to transfer process heat directly

to the atmosphere to minimize or in some cases eliminate the use of cooling water. The technology for controlling the number and types of organisms which interact internally with the cooling system is comprised of an additional factor, i.e., the degree to which the configuration and operation of the intake means prevents the entry of these organisms into the cooling system. The technology for preventing the entry of these organisms while minimizing damage due to external interactions with the organisms is diverse, including a multiplicity of physical and behavior barriers and including various fish bypass and removal systems.

Damage due to internal interactions with process cooling systems relates to the design and operation of these systems with respect to mechanical, thermal, and chemical characteristics. For example, the presence of a cooling tower in a nonrecirculating cooling system could affect the amount of organism damage due to the pumping, temperature changes, and possible chemical additives employed with the tower.

The extent of the known present application of these technologies to industrial cooling water intakes is extremely limited, and is largely confined to steam electric powerplants. However, some technologies potentially applicable to industrial point sources have been applied to irrigation and other flows.

Some information is available concerning the performance and costs of various intake devices in specific applications both at steam electric powerplants and elsewhere. However, the reliability of predictions of performance at one site based on performance at another site is low in many cases.

Best Technology Available

Owing to the highly site specific characteristics of available technology for the location, design, construction and capacity of cooling water intake structures for minimizing adverse environmental impact, no technology can be presently generally identified as the best technology available, even within broad categories of possible application. Within this context, a prerequisite to the identification of best technology available for any specific site should be a biological study and associated report to characterize the type, extent, distribution, and significant overall environmental relation of all aquatic organisms in the sphere of influence of the intake, and an evaluation of available technologies, to identify the site specific best technology available for the location, design, construction

and capacity of cooling water intake structures for minimizing adverse environmental impact. All plants should be studied initially at least to determine if further studies are necessary. Small size does not warrant exemption from 316(b). Further, if costly intake structure technology would be shown to be required, expenditures beyond the cost of recirculating cooling water systems would generally not be prudent since that option would remain to significantly reduce the intake volume of cooling water.

The term "best technology available" infers the use of the best technology available commercially at an economically practicable cost. Consideration of the economic practicability of employing the best technology available also must be done on a similarly individualized basis. When determinations concerning cooling water intake structures for a specific point source within a particular industrial category are being made, the Development Document accompanying effluent limitations and new source performance standards for that category should be referred to for specific factors that may be relevent to the consideration of economic practicability.

A summary of the available technology to be considered on a case-by-case basis is given below.

Acquisition of Biological Data

Data should be provided on the biological community to be protected. Data requirements should be justified by a reasonable potential for minimizing adverse environmental impact commensurate with the costs for data collection. For new steam electric powerplants withdrawing water from sensitive water bodies, the following data should be provided as a minimum to develop an assessment of the biological community in the environs of the existing or proposed intake system, including predictive studies where needed:

- The identification of the major aquatic and other species in the water source. This should include estimates of population densities for each species identified, preferably over several generations to account for variations that may occur.

- The temporal and spatial distribution of the identified species with particular emphasis on the location of spawn-grounds, migratory passageways, nursery areas, shellfish beds, etc.

- Data on source water temperatures for the full year.

- Documentation of fish swimming capabilities for the species identified, and the temperature range anticipated under test conditions that simulate as close as possible the conditions that exist at the intake.

- Data relating the location or proposed location of the intake with concern for the seasonal and diurnal spatial distribution of the identified aquatic species.

Location

Plant siting and the location of the intake structure with respect to the environment can be the most important consideration relevant to applying the best technology available for cooling water intake structures. Care in the location of the intake can significantly minimize adverse environmental impacts. Drawing water from main channels of large streams or from biologically deficient areas and using multilevel intakes are among the many factors that can be considered in locating the intake structure to minimize adverse environmental impacts. Other factors include:

- Avoidance of important spawning areas, fish migration paths, shellfish beds or any location where field investigations have revealed a particular concentration of aquatic life.

- Selection of a depth of water where aquatic life is minimal if multilevel intakes are not considered.

- Selection of a location with respect to the river or tidal current where a strong current can assist in carrying aquatic life past the inlet area or past the face of screens.

- Selection of a location suited to the proper technical functioning of the particular screening system to be used.

It will be diffcult and perhaps impossible in certain cases to offset the adverse environmental impact of improper intake location by subsequent changes in either design or operation of the intake structure short of significantly reducing the intake volume and/or the development of an effective fish recovery or diversion system.

Intake Location With Respect to Plant Circulation Water Discharge

The potentially adverse effects of the recirculation of water from the discharge back to the intake have been

discussed. Most powerplants will prevent this to maximize plant thermal efficiency.

Technology - Prevention of Warm Water Recirculation

All intakes should be located with respect to the plant discharges in a manner that will prevent, to as great an extent as possible, the recirculation of warm water from the discharge back to the intake.

Plan and Vertical Location of the Water Inlet

The location of the water inlet with respect to the temporal and spatial distribution of the resident and migratory aquatic populations is extremely important. Intake configuration can be selected to withdraw water from any point in the source water body. Inlets can be located to draw water from any elevation in the source.

Technology - Location and Elevation of Water Inlet

Water inlets should be designed to withdraw water from zones of the source that are the least productive biologically and contain the lowest population densities of the critical aquatic organisms. This includes both the plan and location of the inlet and the vertical location in the source water body.

In addition, inlets should be located to avoid spawning areas, nursery areas, fish migration paths, shellfish beds or any location where field investigations have revealed a high concentration of aquatic life.

The location of the intake should also be selected to take advantage of river or tidal currents which can assist in carrying aquatic life past the inlet area or past the face of the screens.

Intake Location With Respect to the Plant

The impact on entrained organisms is directly related to the transit time between the intake and the condenser and the transit time (and elevated temperature level) between the condenser and the outfall. Therefore, the intake should be located close to the plant.

Technology - Location of Intake With Respect to the Plant

For nonrecirculating cooling water systems the intake structure (as well as the outfall structure) should be located as close to the plant as practicable.

Design

The basic conclusion related to the design section is that there is no generally viable alternative to the conventional traveling water screen available at the present time. Some new screen types have recently been developed that might prove to have generally superior environmental characteristics following an adequate period of testing. Certain of these designs might be superior today at certain sites. It is noted that this is one area in which research and development have not kept pace with the need. Research projects directed toward the development of more effective screening systems could have valuable results. Furthermore, since the configuration of the intake is largely determined by the screening system employed, the conventional intake structure will probably remain substantially unchanged in the near future.

Therefore, most of the design recommendations contained herein are based on the configuration and physical design features of conventional intake structures as previously defined in Section III. It is anticipated that new intake designs will emerge that may have more positive environmental design features than the conventional intake. One of the express overall recommendations is the encouragement of this positive evolutionary process in the technology. As discussed in Section III, some of the new technologies that will influence intake design have already been partially explored. These include the increased use of behavorial barriers such as the louvered intakes; the development of new types of physical screening systems such as the horizontal traveling screen; and the increased use of bypass systems. The present status of these technologies and their very limited use at existing cooling water intake structures does not justify separate recommendations for these types of systems at the present time. However, certain features of the following recommendations may be applicable to these new intake concepts, as well as to conventional intake structures.

Approach Velocities

Typical approach velocities to the traveling water screens at existing intakes fall within the range of about 0.24 to 0.33 mps (0.8 to 1.1 fps).

Technology - Design Approach Velocities

The design approach velocity to the intake water screens should be measured in the screen channel upstream from the screens and be based on the effective portion of the screen face. The velocity measurement should further be based on consideration of the low water levels anticipated. The design approach velocity should be conservatively based on data specific to the design organism(s) at the intake location. These data should include as a minimum:

- The spatial and temporal distribution of the fish by size for each species identified.

- The annual temperature range anticipated at the intake.

- The demonstrated avoidance capability, including behavior considerations, of these species over the full range of temperatures experienced.

Uniform Approach Velocities and Effective Screen Areas

The maintenance of uniform velocity profiles across the screen face is an important feature in effective screen performance. Many factors can influence the velocity gradient at the screen face and it is not a simple task to eliminate non-uniform velocities. Another important consideration is the determination of the effective area to be used in determining the approach velocity. In many cases, the effective area is significantly less than the full submerged area of the screen. Regular cleaning of the intake streams should be required to assure that uniform approach velocities are maintained.

Technology - Uniform Approach Velocities

The discharger should document that effectively uniform velocities will be maintained over the face of the screen at the design conditions. The discharger should also indicate the effective screen area used in the approach velocity calculation. Where there is reason to question this information, hydraulic model testing, as well as velocity profile measurements taken at the intake should be required of the applicant.

Selection of Screen Mesh Size

The selection of screen mesh size is generally based on providing a clear opening of no more than one-half of the

inside diameter of the condenser tubes. The powerplant industry has generally standardized on 0.95 cm (3/8") mesh size. While this criteron may be adequate for keeping foreign objects out of the cooling system, it may not be adequate for proper protection of all aquatic species. A rational design approach for screen mesh selection based on the design organism(s) is contained in the design portion of the report. The data used in this approach are not considered extensive enough for development of a firm recommendation on screen mesh size.

However, this approach may be used in lieu of better data. More information on this aspect of screen design should become available in the future as the biological data required above are developed.

Behavorial Screening Systems

None of the available behavorial screening systems have demonstrated consistently high efficiencies in diverting fish away from powerplant or other industrial intake structures. The behavorial screening systems based on velocity change appear to be adequately demonstrated for particular locations and species, at least on an experimental basis. More data on the performance of large prototype systems at industrial plants will be required before the louver system can be recommended for a broad class of intakes. The "velocity cap" intake can be recommended to be considered for all offshore vertical intakes since it would add relatively little to the cost of the intake, and has been shown to be generally effective in reducing fish intake to these systems.

The performance of the electric screening systems and the air bubble curtain appears to be erratic, and the mechanisms governing their application are not fully understood at the present. These types of systems might be experimented with in an attempt to solve localized problems at existing intakes, since the costs involved in installing these systems are relatively small.

No successful application of light or sound barriers has been identified. It appears that fish become accustomed to these stimuli, thus making these barriers the least practical of the available behavorial systems on the basis of current technology.

Technology - Velocity Cap Intakes

All offshore intakes should be fitted with a velocity cap designed to minimize the intake of the design organism(s) that are resident at the individual intake location. Alternative designs that provide horizontal intake velocities may provide similar results. The design approach velocity measured at the face of the intake opening should conform to the design approach velocities previously discussed.

Physical Screening Systems

It is concluded that the conventional traveling water screen will continue to be widely used at powerplants for the near term, although this system may have some potentially significant adverse environmental features at some locations.

Furthermore, the fixed screening systems currently installed at powerplant intakes, potentially have even more damaging environmental characteristics. These systems invariably involve longer impingement periods between cleaning cycles and increased damage to the fish because of greater local velocities across the more completely clogged screen. The crude methods employed to clean fixed screens are also damaging to fish.

Technology - Limitation of the Use of Fixed Screens

The replacement of fixed or stationary screening systems by other types of screening systems should be considered at high-volume intakes. The cost impact of this would be relatively small, since the higher initial cost of rotating equipment will be offset by the reduced labor required for manual cleaning of the screens over the lifetime of the intake.

Fish Handling and Bypass Facilities

There is evidence to conclude that all new intakes should incorporate a fish handling and/or bypass system which will allow for safe return of fish to the water source. Unfortunately, the case of fish handling and bypass systems in conjunction with cooling water intakes is not a highly developed technology at the present time. Therefore, a blanket recommendation, requiring these systems at all new intakes cannot be made, but this technology should be considered.

The use of fish bypass facilities at existing intakes where fish impingement has been documented may improve the

performance of these intakes. These types of facilities may also be desirable in those new intakes where it is not clear that impingement can be avoided. One type of bypass system can be incorporated in the conventional intake using the traveling water screen. This system assumes impingement but minimizes its effect in the following manner:

- Impingement time is reduced by continuous operation of the screens

- It provides a means for a gentle separation of the fish from the screen mesh

- It provides a passageway for safe return of fish to the water way

One installation of this type is presently being installed on a major powerplant intake (Plant No. 5111) and was described in detail in the design section of this report. The basic features of this system are shown in Figure III-41. It is believed that this type of system might have a positive impact on the impingement problem if the performance of this initial installation is successful. However, this system is not sufficiently developed at present to provide a basis for a formal general recommendation. The progress of this type of facility should be closely followed in the future because the system appears to have attractive environmental features.

Control of Fouling and Corrosion

Biological fouling of the cooling water system downstream of the intake is usually controlled by the addition of chlorine to the cooling water. The point of application is often the intake structure. The application of chlorine at the intake can adversely affect any subsequent fish bypass system that may be installed. It is, therefore, important that if chlorine is to be administered at the intake it should be added immediately downstream of the point(s) in the cooling system where it is actually needed. The addition of chlorine may seriously affect the survival chances of all entrained organisms, and its use should be carefully monitored and controlled.

Corrosion protection of the screening system is not a design factor of intakes that directly affects the environment. It will be to the advantage of the owner to insure the integrity of screening systems by providing adequate materials for the type of use and water quality of the source.

Intake Configuration

Of the three conventional intake structure types discussed in the design section of this report, the approach channel type of intake generally has sufficient potential for environmental impact to warrant careful evaluation prior to its use. This type of intake is shown in Figure III-47.

Technology - Use of Approach Channel Intakes

The use of lengthy approach channel intakes should be avoided where at all possible, except where they are required as an integral part of the fish bypass system. Where they are used, the screening facility should be located as close as possible to the shoreline while maintaining a satisfactorily uniform velocity distribution. An arrangement is shown in Figure III-48. The velocity in the approach channel should be limited to the design approach velocity.

An exception to the above limitation may be desirable for the site employing a fish guidance and bypass system. The proper functioning of a louver system, for example, requires a controlled flow of uniform velocity. An approach channel may be needed in order to create the hydraulic conditions which produce the guiding effect of louvers.

There are further considerations in the design of a shoreline intake. In some cases at nuclear powerplants, it may not be practical, for safety reasons, to locate the screen structure or intake on the shoreline. Also the placement of the intake with respect to the shoreline should be such as to limit the protrusion of the intake into the stream, except in the case of an ocean site. Protuding intakes cause localized eddy currents that can affect the travel of fish to the intake. An example of this type of design is shown in Figure III-49.

Technology - Limitation of Protruding Shoreline Intakes

Intakes should be designed to limit the protrusion of the intake sidewalls in the stream.

Another important design consideration for shoreline intakes is the location of the screens within the confining sidewalls of the intake. Most conventional intakes have the screens set back from the face of the intake between confining sidewalls. This type of setting can create undesirable entrapment zones between the trash racks and the screens. The recommended setting is to mount the screens

flush with the front face of the intake as shown in Figure III-50. In this type of design, it is also desirable to design the trash racks to allow fish passage in front of the screens. This type of intake is most suited to locations where there is sufficient current in the source to wash the fish past the intake. Two examples of this type of design incorporated in existing powerplants are shown in Figures III-51 (Plant No. 3601) and III-52 (Plant No. 0610).

Technology - Screen Settings for Shoreline Intakes

The screen settings for all shoreline intakes should provide for mounting the screens flush with the upstream face of the intake. In addition, provisions should be made for fish passageways located between the screens and the trash racks.

Use of Walls

Walls are often used to select water from the coldest portion of the source. The use of a wall is shown in Figure III-4. Walls not only create non-uniform velocity conditions at the screens, but also create a dead area where fish can become entrapped. Fish will not usually swim back under the wall to safety. It is recommended that the avoidance of this type of construction be considered.

Technology - Limitation on the Use of Walls

The use of walls for the purpose of selecting cold water should be avoided. Walls may be used where required to prevent the recirculation of warm water or to select water from biologically safe areas of the source. Both of these factors are contained in previous guidelines.

Pier Design

Many intakes utilize a pier which protrudes upstream of the screens and serves as a dividing wall between adjacent screen channels. This type of design, shown in Figure III-53, is not consistent with the concept of flush mounting of screens and should therefore not be used.

Pump to Screen Relationships

The relationship of the pump capacity to the screen area provided is an important design factor at intake structures. Several intake variations to accomodate pumps of a wide range of sizes are shown in Figure III-56. Care must be taken to locate the screen with respect to the pump in a manner which will properly utilize the entire screen

surface. Any mismatch between screen size and pump size can result in undesirable velocity distribution across the screen. Hydraulic Institute Standards recommend minimum distances from screen to pump as well as lateral dimensions of the screen and pump wells. However, these recommendations are based on pump performance criteria and not best utilization of the screen area.

Another important design consideration is the effect on screen velocities under pump run-out conditions. This condition exists where one pump is removed from service and the total dynamic head on the remaining pumps is reduced. Flow through the remaining screens may be increased by as much as 40% above average design conditions.

It is impossible to establish a uniform recommendation that would reflect the different problems that might arise because of the several pump-screen relationships that exist. However, dischargers should be required to show how their designs have allowed for these factors.

Ice Control Facilities

Most intakes located in the northern latitudes employ a partial recirculation of warm condenser discharge back to the intake to control ice buildup in front of the intake. The potential adverse environmental effects of warm water recirculation have been well documented. Fish will be attracted to the intake in the winter months. At the low water temperatures their swimming capability will be greatly reduced and the possibility of their entrapment in the intake will be increased.

Unfortunately, there is no alternate ice control technology currently available to replace hot water recirculation. Submerging the intakes can create another problem as noted in an earlier section. Air bubble systems have not been proven on large cooling water intakes, although they may become acceptable following a further period of development.

The development of alternate technology for the control of ice at intake structures is one area in which further research should be undertaken. However, until such technology is available the use of hot water recirculation cannot be prohibited. These systems perform an important function at intake structures. For this reason, the recommendation for ice control must be qualified in a manner that does not prohibit this system but encourages the development of alternate technology.

Technology - Ice Control at Intakes

The use of warm water recirculation for the purposes of controlling ice at intake structures should be limited to those installations where no other means of ice control are available. Where such a system is employed, close control of the quantity of water recirculated and timing of its use (intermittent if possible) should be practiced. The point of application of the hot water should be located to minimize the potential adverse environmental impact that can result from the application of these systems. The applicant is encouraged to seek alternate solutions to the ice control problem. Intermittent operation of ice control could prevent fish accumulations which might occur with a continuous ice control using warm water recirculation.

Aesthetic Design

Where the intake structure and the balance of the plant are separated by great distances, the intake structure can have an objectionable physical presence. This will be significant in wilderness areas and in natural and historic preserves. There are various techniques available to blend the intake structure with its surroundings. The intake may also be lowered to reduce its impact. However, this latter approach can increase costs significantly especially where rock excavation is required. Where the plant and intake are located close together, the intake will be dominated by the plant and various architectural treatments can be applied to create an attractive grouping of structures. This latter factor is another reason for locating intakes close to the balance of the plant. Since aesthetic impacts are governed by location conditions, a general measure for aesthetic design is not recommended.

Noise Control

The sound level of large circulating water pumps can be quite high. The noise level emanating from an intake located close to the plant will be dominated by the noise of the plant. Current practice, however, is to construct intakes, in milder climates, without enclosures. Where intake noise level is a factor, they should be enclosed. Enclosed intakes would not have significant sound levels. A uniform measure is not recommended.

Construction

The adverse environmental impact of the construction of cooling water intake structures consists almost entirely of

the effects of the aquatic population of the turbidity increases created by the various construction activities. The U.S. Army Corps of Engineers already is responsible for construction in navigable waterways and all intake construction will have to conform to the Corps' guidelines for dredging, disposal of soil, etc.

Dredging, Excavation and Backfilling

These activities can cause significant short term increases in the turbidity of the source water. Depending on the particle size, distribution of the excavated materials and the hydrology of the source, the impact of the turbidity increase will be local or widespread. It is believed that a two-fold approach for the control of turbidity increase is required. First, a limit should be considered for the level of turbidity increase resulting from these operations. Second, typical requirements, as follows, should be utilized to reduce the impact of individual construction operations.

Technology - Turbidity Increase Resulting From Dredging Excavation and Backfilling

The limit on the turbidity increase resulting from contruction operations at cooling water intake structure sites should reflect the magnitude of adverse environmental impacts that are likely to occur. This acceptable level of turbidity should be based, as a minimum, on existing water quality standards for the classification of the particular water body.

Technology - Typical Requirements for Dredging, Excavation and Backfilling

- Excavation in low lying areas in the vicinity of the water body should be conducted with natural soil plugs or berms left in place. When these soil plugs are removed, the one furthest away from the stream should be removed first.

- Where excavations are dewatered during construction, no discharge from the dewatering pump should be made to the waterbody unless it conforms to the turbidity limit described above.

- Materials excavated should be placed above the water line. Suitable slope protection for excavated materials should be provided.

- Underwater excavations for conduit should be scheduled to allow placing of the conduit and the closing of the

excavation to be completed as rapidly as possible. Backfill over conduit below the water line should be leveled to prevent sediment transport.

- Where large excavations and dredging operations are required it may be desirable to conduct these operations behind a retaining structure such as an earth embankment or a coffer dam. Care must be taken in the construction and removal of these facilities so that the turbidity limits established above are not exceeded.

The applicable outline specifications contained above should be incorporated in all intake construction where required. The discharger should indicate that these specifications shall be incorporated into the contract documents for the construction of the intake.

Construction Scheduling

The construction of intakes can often be scheduled in a manner that can reduce adverse environmental impact. In many waterbodies there are significant water level variations during the year. It may be possible to schedule much of the intake construction during low water periods when it can be done above water level. In addition, construction should be scheduled to avoid spawning seasons and migration periods where turbidity increase can harm these functions. The ability to schedule in this fashion requires that the appropriate biological data be made available.

Technology - Construction Scheduling

The scheduling of intake structure construction should consider low water periods to undertake certain construction work above the water level. Scheduling should also consider known periods of fish spawning and migration.

Disposal of Spoil

The disposal of spoil within navigable waters is controlled by the U.S. Army Corps of Engineers. In addition to any requirements that the Corps establish, it is necessary to prevent the disposal of spoil in known fish spawning, feeding areas, shellfish beds and over important benthic deposits. The disposal of spoil in these areas can cause permanent loss of important biological species. In addition, spoil deposits both below the water and above the water should be adequately stabilized to prevent long term turbidity increases due to either water currents or erosion.

Technology - Disposal of Spoil

The disposal of spoil below the water line should be avoided. In those cases where this cannot be avoided, spoil should not be disposed of in spawning grounds, feeding areas and over important benthic deposits. All spoil deposits should be adequately stabilized to prevent long term erosion.

Slope Protection for Excavation and Fills

The same considerations governing the stabilization of spoil deposits are also applicable to the protection of slopes of excavation and fills that are a permanent part of the intake.

Technology - Slope Protection for Intake Excavations and Fills

The slopes of all excavations and fills incorporated in the intake structure shall be adequately protected against erosion and wave action.

Capacity

Certain potentially significant adverse environmental impacts are related to the intake flow volume (capacity) of cooling water intake structures. These impacts are caused by damage to organisms while entrained in the cooling water flow and other indirect effects such as damage to habitats. The effect of capacity in relation to entrainment loss should be considered in terms of the damage to significance of the organisms and the degree of adverse environmental impacts that result. Where the adverse impacts cannot be modified by less costly means, consideration of alteration of intake volume of flow (capacity) is in order.

Some intake flow volume reduction can be achieved by utilization of a non-recirculating (once-through) cooling system but by reduction through the system. However, water temperature would increased at all points in the cooling water system downstream from the intake structure. Further reductions in flow volume can be achieved by utilization of partial or total recirculating (closed-cycle) cooling modes. Recirculating cooling systems are available for significantly reducing the intake flow volume for both existing and new steam electric powerplants as well as for other point sources. Detailed discussions of these systems appear in Reference 38 (for powerplants) and elsewhere.

Operation and Maintenance

Although most of the environmental impact may occur during actual intake operation, it will not be possible to affect intake operation significantly once it is placed in service.

Most of the control of adverse environmental impact of intake structures would probably be obtained in the location, design, and capacity criteria. Some degree of control over entrainment effects might be achieved by proper screen operational procedures. Pump operation might also be controlled to reduce environmental impact. It would also be desirable to develop a program for periodic performance monitoring of intake structures.

Maintenance is an aspect of intake structure operation which has only indirect environmental impact. The discharger should submit in outline form his maintenance program for the intake system.

Screen Operation

The impact of fish impingement on screens can be reduced by continuous screen operation to reduce the period of time that fish are impinged on the screens. This type of operation to reduce impingement effects is only applicable where fish separation and bypass streams are available. Since the number of installations having this capability is small, no general recommendations on continuous screen operation are made. However, more of these systems may be installed in the future. Continuous screen operation in this manner will shorten screen life and increase maintenance costs.

Pump Operation

The ability to control pump operation can reduce impingement effects at certain locations during the winter months. Pump flows often can be reduced in the colder winter months with no detrimental effect on plant performance. Since fish swimming ability is reduced during colder temperatures, such a flow reduction may be desirable to reduce fish impingement.

Performance Monitoring

A program of performance monitoring of intakes is recommended to establish data on the performance of these systems.

Technology - Performance Monitoring of Intake Structures

The performance of intakes should be monitored on a continual basis. The owners of intake structures should periodically submit performance data consisting of the following:

- Source water temperatures
- Stream flows (if applicable)
- Screen operation schedule
- Cooling water flow
- Number, types, and condition of important organisms impinged, entrained, and bypassed.

Applicability of Intake Structure Technology

Consideration of the factors described in this document will be required for existing as well as new structures. In determining the best technology available for existing structures, the degree of adverse environmental impact should be considered. An existing structure may conform to best technology available despite the fact that it does not conform in all details to criteria recommended in this document. New structures can be expected to incorporate the most advanced technology available to minimize adverse environmental impacts.

Consideration of the economic practicability of installing available technology should be part of an intake structure evaluation. The development document accompanying effluent limitations and new source performance standards for a particular industrial category should be referred to for factors specific to point source water for that category which may be relevant to the consideration of economic practicability.

In many cases an existing establishment may have reason to replace the nonrecirculating cooling water system with an essentially closed recirculating system. The reduction in intake water quantity by installing the closed cooling system should significantly reduce adverse environmental impact resulting from the cooling water intake structures. Furthermore, intake flow could be reduced during certain time periods to minimize adverse envircnmental impact.

A stepwise thought process is recommended for cases where adverse environmental impact must be minimized by application of best technology available:

The first step should be to consider whether the adverse impact will be minimized by the modification of the existing screening systems. The possible modifications that can be applied are discussed in the design section of this report. The performance of this type of modification has not been fully documented because initial installation is presently under construction. However, the cost of in-place modifications of this type are not excessive and they can generally be made while the plant is operating.

The second step should be to consider whether the adverse impact will be minimized by increasing the size of the intake to reduce high approach velocities. This will require additional screen and pump bays and most likely the replacement of the existing pumps to reduce the flow through each bay. This type of modification could also be done while the structure is kept in service but only where extra screen bays are available.

The third step should be to consider whether to abandon the existing intake and to replace it with a new intake at a different location and incorporting an appropriate design in order to minimize adverse environmental impact. This could be very costly particularly if an offshore inlet is required. The recommendation of such a change should be very carefully considered. However, a particular discharger may elect to avoid the costs and uncertainties associated with the first two steps and proceed directly to step three.

The time required for the installation of these changes at a steam electric powerplant, for example, will vary from as low as 3-4 months for the modification of an individual screen bay to as much as two years to completely construct a new intake.

Finally, if the above technologies would not minimize adverse environmental impact, consideration should be given to the installation of a closed cooling system with appropriate design modifications as necessary.

SECTION IX

ACKNOWLEDGMENTS

The development of this report was accomplished through the efforts of Burns and Roe, Inc., and Dr. Charles R. Nichols of the Effluent Guidelines Division. The following Burns and Roe, Inc., technical staff members made significant contributions to this effort:

Henry Gitterman, Director of Engineering
John L. Rose, Chief Environmental Engineer
Arnold S. Vernick, Project Manager
William A. Foy, Senior Environmental Engineer
Richard T. Richards, Supervising Civil Engineer

The physical preparation of this document was accomplished through the efforts of the secretarial and other non-technical staff members at Burns and Roe, Inc., and the Effluent Guidelines Division. Significant contributions were made by the following individuals:

Sharon Ashe, Effluent Guidelines Division
Brenda Holmone, Effluent Guidelines Division
Chris Miller, Effluent Guidelines Division
Marilyn Moran, Burns and Roe, Inc.
Kaye Starr, Effluent Guidelines Division
Edwin L. Stenius, Burns and Roe, Inc.

The contributions of Ernst P. Hall, Deputy Director, Effluent Guidelines Division were vital to the publication of this report. Ms. Kit Krickenberger, Dr. Raymond Loehr, and Dr. Chester Rhines of the Effluent Guidelines Division also assisted in the preparation of this report.

The members of the working group/steering committee, who coordinated the internal EPA review, in addition to Mr. Cywin and Dr. Nichols are:

Walter J. Hunt, Chief, Effluent Guidelines Development Branch, EGD
Dr. Clark Allen, Region VI
Alden G. Christiansen, National Environmental Research Center, Corvallis
Swep Davis, Office of Planning and Management
Don Goodwin, Office of Air Quality Planning and Standards
William Jordan, Office of Enforcement and General Counsel
Charles Kaplan, Region IV
Steve Levy, Office of Solid Waste Management Programs

Harvey Lunenfeld, Region II
George Manning, Office of Research and Development
Taylor Miller, Office of General Counsel
Ray McDevitt, Office of General Counsel
James Shaw, Region VIII
James Speyer, Office of Planning and Management
Howard Zar, Region V

Also acknowledged are the contributions of Ronald McSwiney and Anita Dawson, both formerly with the Effluent Guidelines Division.

Other EPA and State personnel contributing to this effort are:

Allan Abramson, Region IX
Ken Bigos, Region IX
Carl W. Blomgren, Region VII
Danforth G. Bodien, Region X
Richard Burkhalter, State of Washington
Gerald P. Calkins, State of Washington
Robert Chase, Region I
WIlliam Dierksheide, Region IX
William Eng, Region I
James M. Gruhlke, Office of Radiation Programs
William R. Lahs, Office of Radiation Programs
Don Myers, Region V
Dr. Guy R. Nelson, National Environmental Research Center, Corvallis
Courtney Riordan, Office of Technical Analysis
William H. Schremp, Region III
Edward Stigall, Region VII
Dr. Bruce A. Tichener, National Environmental Research Center, Corvallis
Srini Vasan, Region V

Additional comments were received from:

Joel Golumbek, Region II
Dr. William A. Brungs, National Water Quality Laboratory
Thomas Willingham, Region VIII
Barbara Pastalove, Region II
Don Miller, National Marine Water Quality Laboratory
Howard McCormick, National Water Quality Laboratory
Dr. Joel Fisher, Office of Program Integration
Dale Bryson, Region V
Dr. Roy Irwin, Office of Enforcement and General Counsel
Effluent Standards and Water Quality Information Advisory Committee

Other Federal agencies cooperating are:

Atomic Energy Commission
National Marine Fisheries Service, National Oceanographic and Atmospheric Administration, Department of Commerce
Bureau of Reclamation, Department of the Interior
Fish and Wildlife Service, Department of the Interior
Tennessee Valley Authority

Additional comments were received from:

Office of the Secretary, Department of Health, Education and Welfare
Office of the Secretary, Department of the Interior
Department of the Treasury
Honorable Mike McCormack
Water Resource Council
Department of Agriculture
Department of Defense

The Environmental Protection Agency also wishes to thank the representatives of the steam electric generating industry, including the Edison Electric Institute, the American Public Power Association and the following utilities and regional systems for their cooperation and assistance in arranging plant visits and furnishing data and information.

Alabama Power Company
Canal Electric Company
Central Hudson Gas & Electric Corporation
Commonwealth Edison Company
Consolidated Edison Company of New York, Inc.
Consumers Power Company
Duke Power Company
Florida Power & Light Company
Fremont, Nebraska Department of Utilities
MAPP Coordination Center for the Mid-Continent Area Power Systems
New England Power Company
New York Power Pool
New York State Electric & Gas Corporation
Niagara Mohawk Power Corporation
Omaha Public Power District
Pacific Gas & Electric Company
Pacific Power & Light Company
Pennsylvania Power & Light Company
Portland General Electric Company
Potomac Electric Power Company
Public Service Company of Colorado
Public Service Electric & Gas Company
Sacramento Municipal Utility District

Southern California Edison Company
Taunton, Massachusetts Municipal Light Plant
Texas Electric Service Company
Virginia Electric & Power Company

Acknowledgment is also made to the following manufacturers for their willing cooperation in providing information needed in the course of this effort.

Beloit-Passavant
F. W. Brackett & Company, Ltd.
J. Blakeborough & Sons, Ltd.
FMC Corporation, Materials Handling System Division
R. E. Reimund Company
Rexnord, Inc.
Stephens-Adamson

Additional comments were received from:

Union Carbide Corporation
Shell Oil Company
Manufacturing Chemists Association
New York State Department of Environmental Conservation
State of New York Public Service Commission
Indianapolis Power and Light Company
Northern Indiana Public Service Company
Texaco, Inc.
Salt River Project
The Great Western Sugar Company
Illinois Power Company
State of Michigan Department of Natural Resources
Natural Resources Defense Council, Inc.
State of New York Department of Law
Otter Tail Power Company
Quirk, Lawler and Matusky, Engineers
Deberoise and Liberman
State of New Hampshire Fish and Game Department
State of California Water Resources Control Board
Atomic Industrial Forum, Inc.
Delaware River Basin Commission
Southern Electric Generating Company
American Electric Power Service Corporation
Southern Services, Inc.
Los Angeles Department of Water and Power
Bechtel Power Corporation
Gulf Power Company
Mississippi Power Company
Georgia Power Company
Tennessee Valley Public Power Association
Detroit Edison

Southwestern Electric Power Comapny
City Public Service Board of San Antonio
Hudson River Fishermen's Association
Tampa Electric Company
State of Illinois Environmental Protection Agency
State of Maryland Department of Natural Resources
State of Michigan Department of Natural Resources
State of Ohio Environmental Protection Agency
State of North Carolina Department of Natural and Economic Resources
State of Texas Water Quality Board

SECTION X

REFERENCES

1. Bates, D.W., "Diversion and Collection of Juvenile Fish with Traveling Screens", U.S. Department of the Interior, Fishery Leaflet 633, (March, 1970).

2. Beall, S. E., "Uses of Waste Heat", Research sponsored by the U.S. AEC under contract with the Union Carbide Corporation, (November 3, 1969).

3. "Directory", Public Power, Vol. 31, No. 1, (January - February, 1973).

4. "Dive Into Those Intakes", Electric Light & Power, E/G edition, pp. 52-53, (November, 1972).

5. "Electric Power Statistics", Federal Power Commission, (January, 1972).

6. Electrical World, Directory of Electric Utilities, McGraw-Hill Inc., New York, 31st Edition, (1972-1973).

7. "Environmental Effects of Producing Electric Power, Hearings before the Joint Committee on Atomic Energy 91st Congress, Second Session", Parts 1 and 2, Vol. I & II, (October, November, 1969 and January and February, 1970).

8. Final Environmental Statement, USAEC, Directorate of Licensing:

   a) Arkansas Nuclear One Unit 1 Arkansas Power & Light Co., (February, 1973).

   b) Arkansas Nuclear One Unit 2 Arkansas Power & Light Co., (September, 1972).

   c) Davis-Besse Nuclear Power Station Toledo Edison Company & Cleveland Electric Illuminating Company, (March, 1973).

   d) Duane Arnold Energy Center Iowa Electric Light & Power Company Central Iowa Power Cooperative Corn Belt Power Cooperative, (March, 1973).

e) Enrico Fermi Atomic Power Plant Unit 2 Detroit Edison Company, (July, 1972).

f) Fort Calhoun Station Unit 1 Omaha Public Power District, (August, 1972).

g) Indian Point Nuclear Generating Plant Unit No. 2 Consolidated Edison Co. of New York, Inc., Vol. 1, (September, 1972).

h) Indian Point Nuclear Generation Plant Unit No. 2 Consolidated Edison Co. Of New York, Inc. Vol. II, (September, 1972).

i) James A. Fitzpatrick Nuclear Power Plant Power Authority of the State of New York, (March, 1973).

j) Joseph M. Farly Nuclear Plant Units 1 and 2 Alabama Power Company, (June, 1972).

k) Kewaunee Nuclear Power Plant Wisconsin Public Service Corporation, (December, 1972).

l) Maine Yankee Atomic Power Station Maine Yankee Atomic Power Company, (July, 1972).

m) Oconee Nuclear Station Units 1, 2 and 3 Duke Power Company, (March, 1972).

n) Palisades Nuclear Generating Plant Consumers Power Company, (June, 1972).

o) Pilgrim Nuclear Power Station Boston Edison Company, (May, 1972).

p) Point Beach Nuclear Plant Units 1 and 2 Wisconsin Electric Power Co. and Wisconsin Michigan Power Company, (May, 1972).

q) Quad-Cities Nuclear Power Station Units 1 and 2 Commonwealth Edison Company and the Iowa-Illinois Gas and Electric Company, (September, 1972).

r) Rancho Seco Nuclear Generating Station Unit 1 Sacramento Municipal Utility District, (March, 1973).

s) Salem Nuclear Generating Station Units 1 and 2 Public Service Gas & Electric Company, (April, 1973).

t) Surry Power Station Unit 1 Virginia Electric and Power Co., (May, 1972).

u) Surry Power Station Unit 2 Virginia Electric & Power Co., (June, 1972).

v) The Edwin I. Hatch Nuclear Plant Unit 1 and 2 Georgia Power Company, (October, 1972).

w) The Fort St. Vrain Nuclear Generating Station Public Service Company of Colorado, (August, 1972).

x) Three Mile Island Nuclear Station Units 1 and 2 Metropolitan Edison Company, Pennsylvania Electric Company and Jersey Central Power and Light Co., (December, 1972).

y) Turkey Point Plant Florida Power and Light Co., (July, 1972).

z) Vermont Yankee Nuclear Power Station Vermont Yankee Nuclear Power Corporation, (July, 1972).

aa) Virgil C. Summer Nuclear Station Unit 1 South Carolina Electric & Gas Company, (January, 1973).

bb) William B. McGuire Nuclear Station Units 1 and 2 Duke Power Company, (October, 1972).

cc) Zion Nuclear Power Station Units 1 and 2 Commonwealth Edison Company, (December, 1972).

dd) Brunswick Steam Electric Plant Units 1 and 2 Carolina Power and Light Company, (January, 1974).

ee) Monticello Nuclear Generating Plant Northern States Power Company, (November, 1972).

9. Hirayama, K., and Hirano, R., "Influence of High Temperature and Residual Chlorine on Marine Phytoplankton".

10. "Intake Systems for Desalting Plants", U.S. Department of Interior, Office of Saline Water, Research and Development Progress Report No. 678, (April, 1971).

11. Intake Systems for Desalting Plants, U.S. Department of Interior, Office of Saline Water, Research and Development Progress Report No. 678, (April 1, 1971).

12. Jenson, L.D. and Brady, D.K., "Aquatic Ecosystems and Thermal Power Plants", Proceedings of the ASCE, (January, 1971).

13. Maxwell, W.A., "Fish Diversion for Electrical Generating Station Cooling Systems - A State of the Art Report", for Florida Power & Light Co., (March, 1973).

14. Mayo, R.D. and James W.T., "Rational Approach to the Design of Power Plant Intake Fish Screens using both Physical and Behavioral Screening Methods", Technical Reprint No. 15, Kramer, Chin & Mayo, (September, 1972).

15. "Metric Practice Guide", (A Guide to the Use of Sl - the International System of Units), American Society for Testing and Materials, Philadelphia, Pennsylvania.

16 Peterson, D.E., Sonnichsen, J.C., Jr., et al, "Thermal Capacity of Our Nation's Waterways", ASCE Annual & National Environmental Engineering Meeting, (October, 1972).

17. "Report on Best Intake Technology Available for Lake Michigan, Preliminary Draft", Cooling Water Intake Technical Committee, (May, 1973).

18. Richards, R.T., "Fish Protection at Circulating Water Intake", Burns and Roe, Inc., unpublished research paper, (May, 11, 1967).

19. Richards, R.T., "Intake for the Makeup Water Pumping System WPPSS Nuclear Project No. 2", Prepared for Washington Public Power Supply System, (March, 1973).

20. Richards, R.T., "Intake for the Makeup Water Pumping System, Hanford No. 2", Burns and Roe, Inc., (January, 1973).

21. Riesbol, H.S. and Gear, R.J.I., "Application of Mechanical Systems to Alleviation of Intake Entrapment Problems", Presented at the Atomic Industrial Forum, Conference on Water Quality Considerations, Washington, D.C., (October, 2, 1972).

22. Schreiber, D.I., et al, "Appraisal of Water Intake Systems on the Central Columbia River", for Washington Public Power Supply System, (March, 1973).

23. Skrotzki, B.G.A. and Vopat, W.A., Power Station Engineering and Economy, McGraw Hill Book Co., N.Y., (1960).

24. Sonnichsen, J.C., Jr., Bentley, B.W., et al, "A Review of Thermal Power Plant Intake Structure Designs and Related Environmental Considerations", Prepared for the U.S. Atomic Energy Commission, Division of Reactor Development and Technology.

25. "Statistics of Privately Owned Electric Utilities of the U.S. 1970", Federal Power Commission, (December, 1971).

26. "Statistics of Publicly Owned Electric Utilities of the U.S. 1970", Federal Power Commission, (February, 1972).

27. "Steam Electric Plant, Air and Water Quality Control, Summary Report", Federal Power Commission, (December, 1969).

28. "Steam Electric Plant Construction Cost and Annual Production Expenses", Twenty-Second Annual Supplement, Federal Power Commission, (1969).

29. "The Electricity Supply Industry", 22nd Inquiry, The Organization for Economic Co-operation and Development (1972).

30. Bibko, P., et al, "Effects of Light and Bubbles on the Screening Behavior of the Striped Bass", Westinghouse Environmental Systems, Paper presented at the Entrainment and Intake Screening Workshop, The John Hopkins University, (February 8, 1973).

31. Skinner, J.E., California Department of Fish and Game, "Evaluation of Large Functional Louver Screening Systems and Fish Facilities, Research on California Water Diversion Projects", Paper presented at the Entrainment and Intake Workshop, The John Hopkins University, (February 8, 1973).

32. Schuler, V.J. and Larson, L.E., Ichthyological Associates and Southern California Edison Company, "Fish Guidance and Louver Systems at Pacific Coast Intake Systems", Paper presented at the Entrainment and Intake Workshop, The John Hopkins University, (February 8, 1973).

33. "Beloit-Passavant Corporation Bulletin 1100".

34. "Engineering for Resolution of the Energy - Environment Dilemma", Committee on Power Plant Siting, National Academy of Engineering, Washington, D.C., (1972).

35. Clark, John and, Brownell, Willard, "Electric Power Plants in the Coastal Zone: Environmental Issues", American Littoral Society Special Publication No. 7, (October, 1973).

36. "Comments on the Environmental Protection Agency's Proposed Guidelines and Development Document for Proposed Best Technology Available for Minimizing Adverse Environmental Impact of Cooling Water Intake Structures," Submitted on behalf of the New York Power Pool, (May, 1974).

37. "Comments on Development Document for Proposed Best Technology Available for Minimizing Adverse Environmental Impact of Cooling Water Intake Structures," Submitted by Edison Electric Institute, (May, 1974).

38. "Development Document for Effluent Limitations Guidelines and New Source Performance Standards for the Steam Electric Power Generating Point Source Category", "U.S. Environmental Protection Agency, (October, 1974).

39. Beck, A.D. and, Miller, D.C., "Analysis of Inner Plant Passage of Estuarine Biota", Paper to be presented in Proceedings of American Society of Civil Engineers Power Division Special Conference, Boulder, Colorado, (August 12-14, 1974).

40. Schuler V.J. and Larson, L.E. "Expermental Studies Evaluating Aspects of Fish Behaviour as Parameters in the Design of Generating Station Intake Systems", Paper presented in ASCE, Los Angeles Meeting (January, 1974).

41. U.S. Atomic Energy Commission, Atomic Safety and Licensing Board, Docket Nos. 50-324, 50-325, (July 8, 1974).

42. "Proceedings in the Matter of Pollution of Mount Hope Bay and its Tributaries", U. S. Environmental Protection Agency, (1972).

43. Carpenter, E.J., Anderson, S.J. and Peck, B.B. "Entrainment of Marine Plankton through the Millstone Unit 1", Woods Hole Oceanographic Institute, (1972).

44. Koo, Ted S.Y., "The Striped Bass Fishery in the Atlantic States", Chesapeake Science, 2, 73-93, (1970).

45. Delisle, Glenn, "Preliminary Fish and Wildlife Plan for San Francisco Bay Estuary", San Francisco Bay Conservation and Development Commission, (1966).

46. Coutant, Charles C., "Biological Aspects of Thermal Pollution I. Entrainment and Discharge Canal Effects", CRC Critical Reviews in Environmental Control, 341-381, (November, 1970).

47. Kerr, James E., "Studies on Fish Preservation at the Contra Costa Steam Plant of the Pacific Gas and Electric Company", California Department of Fish and Game, Fish Bulletin No. 92, (1953).

48. "Reviewing Environmental Impact Statements-Thermal Power Plant Cooling Systems", National Environmental Research Center, U.S. Environmental Protection Agency, (October 1973).

49. "Review of Development Document for Location, Design, Construction and Capacity of Cooling Water Intake Structures", U.S. Department of Commerce Memo, (September 18, 1974).

Additional documents currently in preparation, or recently made available, which may be useful in the evaluation of the best available technology for the location, design, construction and capacity of cooling water intake structures for minimizing adverse environmental impact are the following:

a. "Entrainment: Guide to Steam Electric Power Plant Cooling System Siting, Design and Operation for Controlling Damage to Aquatic Organisms", American Nuclear Society Committee 18.3.

b. "Entrapment/Impingement: Guide to Steam Electric Power Plant Cooling System Siting, Design and Operation for Controlling Damage to Aquatic Organisms and Intake Structures", American Nuclear Society Committee 18.3.

c. "Proceedings of the Second Workshop on Entrainment and Intake Screening", Electric Power Research Institute Report No. 15 in the Cooling Water Discharge Project RP-49.

d. "Bibliography on Swimming Speeds of Fishes", Great Lakes Fishery Laboratory, U.S. Fish and Wildlife Service, Ann Arbor, Michigan.

e. "316(a) Technical Guidance - Thermal Discharges", U.S. Environmental Protection Agency.

50. Clay, C.H., Design of Fishways and Other Fish Facilities, The Department of Fisheries of Canada, Ottawa, 1961.

SECTION XI

GLOSSARY

Brackish Water

Water having a dissolved solids content between that of fresh water and that of sea water, generally from 1,000 to 10,000 mg/l.

Brine

Water saturated with a salt.

CFM

Cubic foot (feet) per minute.

Circulating Water Pumps

Pumps which deliver cooling water to the condensers of a powerplant.

Circulating Water System

A system which conveys cooling water from its source to the main condensers and then to the point of discharge. Synonymous with cooling water system.

Closed Circulating Water System

A system which passes water through the condensers, then through an artificial cooling device, and keeps recycling it.

Cooling Canal

A canal in which warm water enters at one end, is cooled by contact with air, and is discharged at the other end.

Cooling Tower

A heat exchange device which transfers reject heat from circulating water to the atmosphere.

Cooling Water System

See Circulating Water System.

Crib

A type of inlet.

Critical Aquatic Organisms

Aquatic organisms that are commercially or recreationally valuable, rare or endangered, of specific scientific interest, or necessary to the well-being of some significant species or to the balance of the ecological system.

Curtain Wall

A vertical wall at the entrance to a screen or intake structure extending from above, to some point below, the water surface.

Discharge

To release or vent.

Discharge Pipe or Conduit

A section of pipe or conduit from the condenser discharge to the point of discharge into receiving waters or cooling device.

Entrainment

The drawing along of organisms due to the mass motion of the cooling water.

Entrapment

The prevention of the escape of organisms due to the cooling water currents and forces involved.

Fixed or Stationary Screen

A nonmoving fine mesh screen which must usually be lifted out of the waterway for cleaning.

FPS

Foot (feet) per second.

Foot (feet) - Designated as 1', 2', etc.

Impingement

Sharp collision of organism with a physical member of the intake structure.

ID

Inside diameter

Inch (inches)

Designated as 1", 2", etc.

Infiltration Bed

A device for removing suspended solids from water consisting of natural deposits of granular material under which a system of pipes collect the water after passage through the bed.

Inlet Pipe or Conduit

See Intake Pipe or Conduit.

Intake Pipe or Conduit

A section of pipe or conduit from the pump discharge to the condenser inlet; also used for the pipe leading from the inlet to the screens or pumps.

kN

Kilo Newton.

MPS

Meters per second.

Makeup Water Pumps

Pumps which provide water to replace that lost by evaporation, seepage, or blowdown.

Mean Fork Length

The length of a fish measured from the head to the point where the tail begins to fork.

Mine-mouth Plant

A steam electric powerplant located within a short distance of a coal mine and to which the coal is transported from the mine by a conveyor system, slurry pipeline or truck.

Nominal Capacity

Name plate - design rating of a plant, or specific piece of equipment.

Once-Through Circulating Water System

A circulating water system which draws water from a natural source, passes it through the main condensers and returns it to a natural body of water.

Powerplant

Equipment that produces electrical energy, generally be conversion from heat energy produced by chemical or nuclear reaction.

Pump and Screen Structure

A structure containing pumps and facilities for removing debris from water.

Pump Chamber

A compartment of the intake or pump and screen structure in which the pumps are located.

Pump Runout

The tendency of a centrifugal pump to deliver more than its design flow when the system resistance falls below the design head.

Recirculation System

Facilities which are specifically designed to divert the major portion of the cooling water discharge back to the cooling water intake.

Recirculation

Return of cooling water discharge back to the cooling water intake.

Saline Water

Water containing salts.

Sampling Stations

Locations where several flow samples are taken for analysis.

Screen Chamber

A compartment of the intake of pump and screen structure in which the screens are located.

Screen Structure

A structure containing screens for removing debris from water.

Sedimentation

The process of subsidence and deposition of suspended matter carried by a liquid.

Service Water Pumps

Pumps providing water for auxiliary plant heat exchangers and other uses.

Station

A plant comprising one or several units for the generation of power.

Stop Logs

A device inserted in guides at the entrance to a waterway to permit dewatering. It can be made up of individual timber logs, but more commonly of panels of steel, timber, or timber and concrete.

Total Dynamic Head (TDH)

Total energy provided by a pump consisting of the difference in elevation between the suction and discharge levels, plus losses due to unrecovered velocity heads and friction.

Trash Rack, Trash Bars, Grizzlies

A grid, coarse screen or heavy vertical bars placed across a water inlet to catch floating debris.

Trash Rake

A mechanism used to clean the trash rack.

Traveling Screen

A device consisting of a continuous band of vertically or nearly vertically revolving screen elements placed at right angles to the water flow. Screen elements are cleaned automatically at the top of the revolution.

Turbidity

Presence of suspended matter such as organic or inorganic material, plankton or other microscopic organisms which reduce the clarity of the water.

Unit

In steam electric generation, the basic system for power generation consisting of a boiler and its associated turbine and generator with the required auxiliary equipment.

Utility (Public Utility)

A company, either investor-owned or publicly owned which provides service to the public in general. The electric utilities generate and distribute electric power.

Velocity Cap, Fish Cap

A horizontal plate placed over a vertical inlet pipe to cause flow into the pipe inlet to be horizontal rather than vertical.

Wet Well (Pump Chamber)

A compartment of the pump structure in which the liquid is collected and to which the pump suction is connected.

APPENDIX A

ENTRAINMENT IMPACT ON MICROBIOTA

The following text appears in Clark, John and, Brownell, Willard, "Electric Power Plants in the Coastal Zone; Environmental Issues", American Littoral Society Special Pubication No. 7, pages V-18 through V-24 (October, 1973). This text is presented as being illustrative of the types of impact entrainment can have or is thought to have on microbiota. It is included for this purpose only and should not be construed as Agency policy with respect to specifics cited within the text. Some editorial remarks have been made by EPA and these are enclosed in parentheses.

Generally, it would appear that phytoplankton (can) survive higher temperatures than zooplankton. The whole of the suspended microflora of estuaries--diatoms, green algae, etc., are usually considered en masse and the analysis of power plant impact focuses more on overall reduction of mass productivity (photosynthetic capability) than on the number killed of each species. Immediate and pronounced damage to productivity is done by heat in warm seasons and by chlorination of the plant cooling system at all times. But, because of fast regeneration (times of many algae species, the populations of these species) may be restabilized to normal production within several hours after passage through the plant and return to the source water body. In cool seasons (ambient temperature less than 60 to 65°F) the photosynthetic rate may be improved somewhat by increased temperature. [1]

The matter is complex and must be studied and resolved separately for each case. For purposes of our present argument, it must be emphasized that the natural mechanisms of estuaries and the patterns of estuarine life are such that potential adverse impacts from inner-plant damage of microflora are normally higher at estuarine plant sites than open coastal sites. For example, studies in North Carolina showed the warm season productivity of estuarine waters to be about three times as high per unit of water (volume or area) as the adjacent ocean[2] and suggest, therefore, that inner-plant damage would be heavier in terms of total reduction of productivity for water drawn from the ocean.

For zooplankton the picture is different. Zooplankton species have longer generation spans than phytoplankton and individual (species) appear to suffer more harm in plant

passage. There is considerable scientific literature on effects of inner-plant damage (with once-through systems) to estuarine zooplankton--both the permanently suspended species, holoplankton, and the temporarily suspended species that usually spend only a larval stage in suspension, meroplankton. Some species appear to alternate on a daily basis between suspended (night) and bottom life (day).

In a recent review of the literature, the AEC staff found that losses of zooplankton in power plant cooling systems range from 15 to 100 percent, but suggested that a 30 percent loss of zooplankton "may be more representative." [3] This rate seems to apply to ocean sites as well as estuaries--the mean kill at the Huntington Plant in California was 28.4 percent. [4] The rate of inner-plant kill depends upon a great number of variables of plant design and operation, season and water temperature, and the hardiness and the life patterns of the species involved. (Particularly susceptible species of zooplankton are those with appendages which can be damaged mechanically as well as those with low thermal tolerances.)

The most valuable shellfish species have planktonic larval stages (meroplankton) that are vulnerable to entrainment and to the hazards of passage through cooling systems. For example, (a proposed power station which is to be situated in a marsh), would do massive damage to clam populations. Although the plant would draw water for cooling from the bottom of the ocean just outside the inlet, the ocean water in this area has proved to be strongly estuarine because the estuary flushes out 85 percent of its high tide volume on each ebb tide. Clam larvae, which transit to the ocean and back with each change of tide, are exposed in high concentration to entrainment by the offshore intake because they are nonbuoyant and tend to sink toward the bottom once they pass through the inlet and out in the ocean. All larvae entrained would be killed in passage through the plant because of a high delta T (45°F) and long transit time (period for passage through the cooling system). If abundance is dependent upon reproductive success, as it appears to be, the total yearly loss to the clam population in the proposed estuary because of inner-plant kill would be 36 to 48 percent. [5] Lowered by this amount, it would not be able to support increasing recreational demand. More than 15,000 citizens are already licensed for recreational clamming, most of which occurs in this area, and over-harvesting is already in evidence.

The most important zooplankton in the estuarine and food chain are among the most vulnerable. Examples of such

important zooplankton are: gammarids (tiny shrimplike amphipods that live on estuarine seabeds, but whose young are planktonic), mysids (small shrimplike creatures with planktonic young), and copepods (tiny crustacean plankton that provide the basic food for estuarine fish larvae). These sensitive organisms are the foundation of nourishment for important estuarine species.

Copepods (holoplankton) are susceptible to damage from passage through cooling systems and their death rates appear to be controlled by temperature of the cooling water. A detailed study of copepods in relation to the Northport Plant on Long Island Sound shows: "...essentially 100 percent mortality for temperatures exceeding 34 °C (93.2°F)." [6] Because of a high design delta T (14-17°C), the discharge temperature of this plant would be 34°C when Long Island Sound temperatures reached 10°C (66°F). [6] It may be concluded, therefore, that Northport kills "essentially 100 percent" of the copepods transitting its once-through cooling system from July to early October because Long Island Sound temperatures are above 19°C (66°F) for this period.

Other studies at Northport showed that copepod kills dropped off to 33 percent in the fall and four percent in the winter. [7] This confirms that copepod inner-plant mortality is dependent on characteristics of the power plant (e.g. delta T) and seasonal temperatures in the source water body. Further confirmation comes from work at the Brayton Point Plant on Mt. Hope Bay, Rhode Island, where kills of 36 to 71 percent of two copepod species were associated with summer effluent temperatures of 26 to 30°C (79-86°F). [8]

The gammarids (important for nourishment to young fishes in the upper estuary) do not survive plant passage as well as the copepods. Temperature mortality curves for estuarine species typical of Chesapeake Bay [9] show that 100 percent of gammarids are killed by temperature alone at about 32°C (90°F) and that significant kills begin at about 30°C (86°F). It is apparent that, in the combination of mechanical, chemical, and thermal impacts, virtually 100 percent of gammarids that pass through the cooling system of estuarine-sited power plants are killed in the warm season. By temperature alone, significant kills would start when estuary temperatures reach 72°F for a plant with a delta T of 14°F or higher. Mysids are even more sensitive to themal shock. (Time-temperature mortality) curves show that virtually 100 percent mortality (long-term exposure) is reached at 27°C (81°F). By temperature alone, a near 100 percent kill would occur when estuary temperatures reach

19°C (66°F) and the cooling system delta T is 15°F (8.3°C) or higher. Studies of a California estuarine species (name - Neomysis Americana) showed a similar pattern with lethal temperatures of about 78°F (25.6°C) for long-term exposure and about 87 and 88°F (30.6-31.1°C) for short-term, or shock, exposure (four to six minutes).[10]

In attempting to generalize about inner-plant effects on zooplankton in order to make practical recommendations, one confronts a bewildering variety of species, experiments, and data collections. There is by no means a consensus of agreement among researchers on the application of the results presented above, nor does it appear likely that any uniform interpretation could be reached. However, these examples serve to show that the more sensitive of the important planktonic estuarine species can be severely damaged by a combination of inner-plant impacts. We conclude that damage to zooplankton is inherent in once-through cooling, and that damage is heaviest in the warm season because the increased temperature is synergistic with most other impacts and is itself a mortality factor. It appears that the following general guidelines are applicable to estuaries of the mid-Atlantic:

Discharge temperature	Effect on zooplankton
80°F	Death or damage to an appreciable proportion of the more sensitive species.
85°F	Mortality and damage high to more sensitive species; significant but lower for more resistant species.
90°	Widespread high mortality and damage to all but the more resistant species.
95°F	Nearly complete kill of most important species.

The above visualizes a "typical" plant, designed for once-through cooling with a moderate temperature rise across the condensers and a discharge channel of moderate length. It includes the idea that mortality factors, other than temperature, operate year round but that damage is greatly accelerated in summer due to thermal shock and the synergizing effect of temperature to mechanical or chemical

factors involved. These guideline temperatures would not apply to northern or southern latitudes where different species are of different ecological races and where even the same species are of different ecological races. For example, Biscayne Bay (Florida) natural temperatures reach 86 to 88°F (30 to 31°C) in summer when local zooplankton are living at temperatures that would be damaging to many of their mid-Atlantic counterparts. These natural temperatures are so close to stress levels that only small increases in temperature can have serious effects. For example, about 10 percent of Biscayne Bay invertebrate zooplankton died in experiments at a temperature of 91.4°F (33°C), only a few degrees above the natural summer maximum. For this reason, estuarine zooplankton in southern estuaries are more susceptible to damage from a given delta T than those in northern estuaries.

The major unresolved question about the impact of inner-plant damage on plankton concerns the effect on food chain productivity and on the overall ecological balance of estuarine systems. It is clear that some proportion of the plankton are killed in passage, that some species are more resistant than others, that the kill is higher in warm seasons, and that some recovery is probable for species with rapid reproductive power. We conclude that, in general, power plant induced plankton kills have significant adverse impacts in the vicinity of power plants, and these impacts are best minimized by proper site selection and by reducing the cooling water requirements; specifically, by the installation of closed-cycle cooling systems, such as cooling towers or spray ponds. We further conclude that plants located in vital areas have adverse effects that extend far beyond the vicinity of the power plant. Therefore, closed-cycle cooling systems, even though they do reduce the extent of damage, do not offer sufficient protection to estuarine life to allow them to be built in vital areas.

REFERENCES CITED

1. Morgan, R.P., III and R.G. Stross, 1969. Destruction of a phytoplankton in the cooling water supply of a steam electric station. Chesapeake Science, Vol. 10, Nos. 3&4: 165-171.

2. Thayer, Gordon W. 1971. Phytoplankton production and the distribution of nutrients in a shallow unstratified

estuarine system near Beaufort, N.C. Chesapeake Science, Vol. 12, No. 4:240-253.

3. AEC Final Environmental Statement--Shoreham Nuclear Power Station, U. S. Atomic Energy Commission.

4. AEC 1972. Draft Environmental Statement--San Onofre Nuclear Generating Station, Units 1&2. U.S. Atomic Energy Commission.

5. Clark, John R. 1973. The environmental impact of the proposed Seabrook Nuclear Power Plant. Testimony before N.H. Bulk Power Supply Site Evaluation Committee. February 8, 1973: 88p.

6. Suchanek, T.H., Jr. and Grossman, C. 1971. Viability of zooplankton. In: Studies on the effects of a steam electric generating plant on the marine environment at North Port, New York. S.U.N.Y., Stony Brook, Marine Sci. Res. Ctr., Tech. Report Ser. No. 9:61-74.

7. AEC Final Environmental Statement--Shoreham Nuclear Power Station. U.S. Atomic Energy Commission.

8. Gonzalez, J.G. 1972. Seasonal variation in the responses of estuarine populations to heated water in the vicinity of a steam generating plant. Ph.D. thesis, U. of R.I.: 142p.

9. Mihursky, J.A. and U.S. Kennedy. 1967. Water temperature criteria to protect aquatic life. Trans. Am. Fish. Soc., Vol. 96 (suppl.): 20-32.

10. Hair, James R. 1971. Upper lethal temperature and thermal shock tolerances of the opposum shrimp, Neomysis awatschensis, from the Sacramento-San Joaquin Estuary, California, Calif. Fish and Game, Vol. 57, No. 1:17-27.

APPENDIX B

EVALUATION APPROACH

Each proposed and existing cooling water intake should be evaluated individually in determining the best technology applicable for that situation. Obviously, a systematic rational approach should be used in such evaluations. Identified below are several of the major points which are discussed in detail in the main body of the document and that should be incorporated into the evaluation approach.

A. Water Use - If the major portion of the intake water, as determined over an adequate period of time such as a year, is not used for cooling purposes, the intake structure does not meet the definition of a cooling water intake structure and no further evaluation is necessary.

B. Source - Information on the location of the intake structure, flow rate of actual or anticipated intake water, and flow rate and other pertinent water data relating to the water source should be provided.

C. Age - Existing cooling water intake structures need not conform to all the technology described in the development document if environmental damage is minimal. New intake structures may be expected to incorporate fully the best technology available.

D. Economic Conditions of the Industry - The Development Document accompanying the effluent limitations and new source performance standards for particular industrial categories can provide information which may be relevant.

E. Engineering, Hydrologic and Biological Data - Such engineering information should include details on the location, design, construction, and capacity of the intake and on the cooling system that is being or is to be used. Hydrologic data should help identify the influent plume and sphere of influence of the plant. The magnitude of the biological data required in each case should be related to the actual or anticipated severity of the adverse environmental impacts. The information should be adequate to identify and quantify any adverse environmental impacts. It is not expected that each case will require the same information.

The 316(a) Technical Guidance Manual which EPA will issue in the near future may provide an indication of the information necessary to permit an evaluation of adverse environmental impacts associated with intake screen impingement and inner plant damage. The general type of engineering hydrologic, and biological information noted at the end of this Appendix may be found useful.

F. Magnitude of Impact - The significance of any damage to organisms or other adverse environmental impacts should be determined with respect to the total environment in the "sphere of influence" of the affected point source (exclusive of pollutant discharge effects).

G. Alternatives - If a significant adverse environmental impact is identified, the applicant should be required to develop a recommended plan of action to minimize the impact with alternatives along with estimates of the results anticipated. It is useful to note that the statute and the regulations require only that adverse environmental impacts be minimized and not necessarily eliminated altogether. In determining which alternatives are to be permitted, the costs of the alternatives should be considered.

Biological, hydrological and engineering data are required to adequately evaluate present or potential impingement, inner-plant damage, or other adverse environmental impacts. The type of data that may be useful includes:

Engineering

1. Quantities of water withdrawn (weekly averages) for the last 12 months and quantities to be withdrawn (weekly basis) over the life of the plant; also sources and points of discharge.

2. Intake velocity through various parts of the intake channel and screen.

3. Time of passage of water through various segments of the system from the intake to the condensers or other heat exchangers to the point of discharge (end of pipe and end of channel).

4. Data showing any differences between ambient temperature and water temperature at screens through recirculation or other methods of deicing or from short circuiting.

5. Specifications on screen mesh sizes, cleaning devices (physical and chemical), live orgnaism return devices, organism diversion systems and other operational characteristics.

6. Capability of variable depth withdrawal and expected operation modes with seasons.

7. The points of chlorine addition, the amounts of chlorine used daily, monthly, and annually, the frequency and duration of chlorination, and the maximum total residual chlorine at the point of dicharge obtained during each chlorination schedule.

8. A list of any other chemicals, additives, or other discharges that are contained in the cooling water discharge including the name, points of addition, amounts (including frequency and duration of application and concentrations occurring prior to dilution), and chemical compositions if known.

Biological

1. A map showing the location and times of occurrence, in areas in the sphere of influence of the point source (exclusive of pollutant discharge effects), of reproductive and nursery areas, migratory routes, and principal macrobenthic populations.

2. Estimates or measurements of redistribution of species or life stages of species (including those moving through the bypass structure) from one location to another with description of habitat changes resulting from relocation.

3. Qualitative and quantitative impingment data by species and life stage for the shortest intervals for which data are available, for each season.

4. Seasonal quantitative densities of principal entrainable forms of species, i.e., phytoplankton, zooplankton and important egg and larval phases measured in the cooling water intake system. Percent of damage during and after plant passage should be identified for each season or important time of the year for seasonal forms, i.e., seasonal arrival of egg forms or seasonal migration of juvenile forms. With proposed plants, the percent damage may be determined using laboratory simulation with simulated temperature rise, chemical input and mechanical stresses to simulate anticipated plant

conditions. Absent sound data on percent damage, 100% entrainment mortality should be assumed.

5. Determination of the seasonal standing crop of important entrainable species in the area of influence of the plant is that area of the water body that contains entrainable life forms which are subject to entrainment by the plant. The area of influence is specifically designed to protect spawning grounds, zones of migration, coves, lakes or river sections where entrainment might act as a large cropping mechanism in the ecosystem. A minimum of three years of data is desirable to propoerly describe the yearto-year variation of this standing crop in freshwater habitats. A more-lengthy period may be needed for marine habitats.

6. Determination of the percent of damage due to the plant in the zone of influence or habitation of the organism. Tripak 11/29/74 percent damage should be estimated on a species-by-species basis before intake, after screens, and after discharge. A damage level of more than average year-to-year variability over the area of influence should be considered unreasonable and alternate technology should be investigated. If more than one plant is present in an area of influence, the total cumulative cropping should not exceed the annual average variation over a minimum of three years for freshwater inhabitats. A more=lengthy period may be needed for marine habitats.

7. Available information on the cruising speeds (as individuals and as schools or herds) of representative important species of fish (juvenile stage) at summer and winter temperatures.

   The available data should be summarized in a tabular or graphical form that simplifies the evaluation of damage and its significance to the aquatic ecosystem. Wherever possible species-specific data should be provided.

The foregoing is a skeletal outline of the type of approach required for such a study. This will be supplemented by a more detailed 316(b) guidance manual which will be published shortly by the Agency.

APPENDIX C

TOPICAL BIBLIOGRAPHY

SUPPLIED BY THE

NATIONAL MARINE FISHERIES SERVICE

A C C E L E R A T I O N

FISH PASSAGE RESEARCH PROGRAM
The accelerated Fish Passage Research Program
U. S. Bureau of Commercial Fisheries - Seattle, Wash., 5 vols., Dec. 1964
(See attachment)

A I R B U B B L E S

Andrew, F. J. and G. H. Green
1960. Sockeye and pink salmon production in relation to proposed dams in the Fraser River System, International Pacific Salmon Fisheries Commission, Bull. XI, New Westminister, BC, Canada

Bibko, P., et al
1973. Effects of Light and Bubbles on the Screening Behavior of the Striped Bass, Westinghouse Environmental Systems, paper presented at the Entrainment and Intake Screening Workshop - John Hopkins Univ., Feb. 8, 1973.

Brett, J. R., and D. MacKinnon
1952. Experiments using lights and bubbles to deflect migrating young spring salmon. Progress Reports of the Pacific Coast Stations, Fish. Res. Bd., Canada, No. 92, 14-15.

Brett, J. R., and D. MacKinnon
1953. Preliminary experiments using lights and bubbles to deflect migrating young spring salmon. J. Fish. Res. Bd., Canada, 1953, 10, 548-559.

Mayo, R. D. and W. T. James
1972. Rational Approach to the Design of Power Plant Intake Fish Screens using both Physical and Behavioral Screening Methods, Technical Reprint No. 15, Kramer, Chin & Mayo (Sept. 1972).

U. S. Environmental Protective Agency
1973. Development document for proposed best technology available for minimizing adverse Environmental Impact of Cooling Water Intake Structures, U. S. Environmental Protective Agency, December 1973.

Bureau of Fisheries Bulletin
1939. Fish Screens in Irrigation Diversions, Rotary and Parallel Bar Screens, Bulletin No. 69710, July 1939. U.S. Dept. of Int. Bur. of Fisheries, Wash., D.C.

Goodier, R. D.
1956. Reclamation pioneers in fish conservation techniques. The Reclamation Era, 1956. 42. 21-22.

Greenland, Donald C.
1968. Design considerations for construction of bar screens - Aug. 5, 1968, memo report to Fish Facilities Section, Col. Fish. Program Office, BCF, Portland, Oregon.

Leitritz, Earl
1952. Stopping Them: The Development of Fish Screens in California Rotary Bar, Electric and Perforated Plate Screens, Calif. Fish and Game, Vol. 38 No. 1 - Jan. 1952.

Reimers, Norman
1966. A low-maintenance Fish Barrier with free-flow characteristics, horizontal bar screen - The Progressive Fish-Culturist, Apr. 1966.

Rounsefell, Ph.D George A. and W. Harry Everkart, Ph.D
1953. Fishery Science, Chap. 12, John Wiley and Sons, Inc., New York.

Spencer, John
1935. Report of Fish Screen Installations; F. P. 39, Letter report to E. Riggins, Chief, Div. of Scientific Inquiry, U. S. Bureau of Fisheries, Wash., D.C. May28, 1935. 24 pp.

U. S. Patents
(See attached list)

Wales, J. H.
1948. California's Fish Screen, Bar and Rotary Screens, Calif. Dept. of Fish and Game, Vol.34, No. 2, April 1948.

C H A I N F E N C E

U. S. Patents
(See attached list)

C H A I N, M O V I N G

Fields, P. E., G. L. Finger and L. A. Verhoeven
1954. The use of a chain barrier to guide young salmon. Univ. of Wash. School of Fisheries, Tech. Rept. 1, 1-11.

Fields, P. E., G. L. Finger, R. J. Adkins, R. E. Carney, and R. A. Pyke
1955. A factorial study of the response of steelhead trout, chinook and silver salmon fingerlings to chain barriers in moving water. Univ. of Wash. School of Fisheries, Tech. Rept. 13. 1-7. June 1955.

C H U T E, B Y P A S S

Higgins, David T.
1956. The fish chute, a part of the downstream migrant system, City of Tacoma, Dept. of Public Utilities, Oct. 23, 1956.

C L O S E D C O O L I N G S Y S T E M

Mayo, R. D. and W. T. James
1972. Rational Approach to the Design of Power Plant Intake Fish Screens using both Physical and Behavioral Screening Methods, Technical Reprint No. 15, Kramer, Chin & Mayo (Sept. 1972).

D I S C

U. S. Environmental Protective Agency
1973. Development document for proposed best technology available for minimizing adverse Environmental Impact of Cooling Water Intake Structures, U. S. Environmental Protective Agency, Dec. 1973.

U. S. Patents
(See attached list)

Rex Chainbelt, Inc.
1968. Rex water screening equipment, Bull. No. 316-068, Rex. Chainbelt, Inc.

American Consolidated Mfg. Co.
1957. Correspondence w/drawing on proposed production of Rotary Fish Screen to Fish and Wildlife Service, Dept. of the Interior, Portland, Oregon - Aug. 5.

Andrew, F. J.
1951. The Head-Discharge Relationships for Wire Screen in Plane and Cylindrical Forms. International Pacific Salmon Fisheries Commission, New Westminister, Canada.

Andrew, F. J. and G. H. Green
1960. Sockeye and pink salmon production in relation to proposed dams in the Fraser River System, International Pacific Salmon Fisheries Commission, Bull. XI, New Westminister, BC, Canada.

Baker, S. and U. B. Gilroy
1928. The Investigation of Methods and Means of Conserving Fish Life by Means of Proper Fish Screens and Fish Ladders, Preliminary Report to Henry O'Malley, Commissioner of Fisheries, Wash., D.C. Nov. 30, 1928.

Baker, S. and U. B. Gilroy
1930. The Investigation of Methods and Means of Conserving Fish Life by Means of Proper Fish Screens and Fish Ladders, Progress Report to Henry O'Malley, Commissioner of Fisheries, Wash., D. C. Jan.22,1930.

Baker, S. and U. B. Gilroy
1932. The Investigation and Methods and Means of Conserving Fish Life by Means of Proper Fish Screens and Fish Ladders, Progress Report for 1931 to Henry O'Malley, Commissioner of Fisheries, Wash., D.C. Jan. 29, 1932.

Baker, S. and U. B. Gilroy
1933. Problems of Fishway Construction, Fish Ladders, Elevators, Mechanical Screens, and Electrical Fields at Dams and Intakes, Civil Engineering, Dec. 1933, pp 671-675.

Bureau of Commercial Fisheries
1958. Fishery Development Program of the Columbia River, Bureau of Comm. Fisheries, Dept. of Interior, Progress Report through fiscal year 1958. p. 80.

Bureau of Fisheries Bulletin
1939. Fish Screens in Irrigation Diversions, Rotary and Parallel Bar Screens, Bulletin No. 69710, July 1939. U. S. Dept. of Int. Bur. of Fisheries, Wash., D.C.

Clay, C. H.
1961. Design of Fishways and Other Facilities, Chap. 6, Queen's Printer, Ottawa, Canada.

Department of Fisheries, State of Washington
1958. Screening program, 68th annual report, State of Washington, Dept. of Fisheries, pp. 16-17.

Erickson, D. M.
1940. Observations and experiments with fish screens in the Wenatchee River System. Unpublished report, Washington State Fisheries Dept.

Goodier, R. D.
1956. Reclamation pioneers in fish conservation techniques. The Reclamation Era, 1956. 42. 21-22.

Greenland, Donald C.
1962. Operation of Temporary Downstream Migrant Facilities, Roza Dam, Yakima River, Washington, Draft Report, Fish Facility Section Col. Fisheries Program Office, Bureau of Commercial Fisheries, March 21, 1962.

Harder, James A.
1958. Hydraulic Losses in a Cylindrical Fish Screen Model. Hydraulic Lab., Univ. of California.

Heckeroth, D. N.
1961. Umatilla District, miscellaneous, Oregon State Game Commission, Fishery Division, annual report 1961, pp. 307-308.

Hewkin, J. A.
1961. John Day District, spring chinook salmon and rotary screen bypass trapping, Oregon State Game Commission, Fishery Div., annual report 1961 pp. 210, 218-219.

Kabel, C. S.
1971. Banta-Carbona Fish Screen Construction, final report, anadromous fish project, Calif. Dept. of Fish and Game.

Kabel, C. S.
1974. Glenn-Colusa Fish Screen Construction, annual performance report, Anadromous Fish Conservation Act Program, Calif. Dept. of Fish and Game.

Leitritz, Earl
1952. Stopping Them: The Development of Fish Screens in California Rotary, Bar, Electric and Perforated Plate Screens, Calif. Fish and Game, Vol. 38, No. 1 - Jan. 1952.

Leitritz, Earl
1952. A new mechanical fish screen for hatchery ponds, drum screen Calif. Fish and Game, Vol. 28, No. 3 - July 1952.

Mayo, R. D. and W. T. James
1972. Rational Approach to the Design of Power Plate Intake Fish Screens using both Physical and Behavioral Screening Methods, Technical Reprint No. 15, Kramer, Chin & Mayo (Sept. 1962).

McKernan, D. L.
1940. A progressive report of experiments on the downstream migrating chinook salmon fingerlings at the Dryden Ditch Screens. Unpublished report, Wash. State Fisheries Dept., 1940.

Oregon State Game Commission
1921. Drawing - type of mechanical fish screen developed and adopted by the Oregon Game Commission in 1921.

Oregon State Game Commission, Fishery Div.
1957. Annual Report, Salem, May 1958. 298 pp.

Pollock, Robert D.
1969. Tehama-Colusa Canal to Serve as Spawning Channel, U. S. Fish and Wildlife Service, The Progressive Fish-Culturist, Vol. 31, No. 3, July 1969.

Rex, Chainbelt, Inc.
1968. Rex water screening equipment, Bull. No. 316-168, Rex Chainbelt, Inc.

Rounsefell, Ph.D. George A. and W. Harry Everkart, Ph.D.
1953. Fishery Science, Chap. 12, John Wiley and Sons, Inc., New York.

Spencer, John
1935. Report of Fish Screen Installations; F. P. 39, letter report to E. Riggins, Chief, Div. of Scientific Inquiry, U. S. Bur. of Fisheries, Wash., D.C. May 28, 1935. 24 p.

State of California
1974. Fish Facility Program, State of Calif., Dept. of Fish and Game and Dept. of Water Resources, Bay-Delta Fishery Project, Monthly Progress Reports - April 1974, p. 4 - May 1974, pp. 3 & 4 - June 1974, pp. 5-8 - July 1974, pp. 3-5 - August 1974, pp. 4-6 - Sept. 1974, pp. 6-8 - Oct. 1974, p. 6.

Tsipliaev, A. S.
1973. Fish protective screening devices with water diversions. Leningrad Polytechnic Institute, Dept. of Hydraulics, USSR 166 pp.

U. S. Environmental Protection Agency
1973. Development document for proposed best technology available for minimizing adverse Environmental Impact of Cooling Water Intake Structures, U. S. Environmental Protection Agency, Dec. 1973.

U. S. Fish and Wildlife Service, Bureau of Commercial Fisheries,
1964. Columbia River Fishery Program, Circ., 192, Nov. 1964.

U. S. Patents
(See attached list)

Wales, J. H.
1948. California's Fish Screen Program, Bar and Rotary Screens, Calif. Dept. of Fish and Game, Vol. 34, No. 2, April 1948.

E L E C T R I C

Andrew, F. J. and G. H.Green
1960. Sockeye and pink salmon production in relation to proposed dams in the Fraser River System, International Pacific Salmon Fisheries Commission, Bull. XI, New Westminister, BC, Canada

Andrew, F. J., P. C. Johnson and L. R. Kersey
1956. Further experiments with an electric screen for downstream migrant salmon at Baker Dam, progress report, International Pacific Salmon Fisheries Commission, New Westminister, B.C.

Baker, S. and U. B. Gilroy
1928. The Investigation of Methods and Means of Conserving Fish Life by Means of Proper Fish Screens and Fish Ladders, Preliminary Report to Henry O'Malley, Commissioner of Fisheries, Wash., D.C. Nov. 30, 1928.

Baker, S. and U. B. Gilroy
1930. The Investigation of Methods and Means of Conserving Fish Life by Means of Proper Fish Screens and Fish Ladders, Progress Report to Henry O'Malley, Commissioner of Fisheries, Wash., D.C. Jan.22,1930.

Baker, S. and U. B. Gilroy
1932. The Investigation and Methods and Means of Conserving Fish Life by Means of Proper Fish Screens and Fish Ladders, Progress Report for 1931 to Henry O'Malley, Commissioner of Fisheries, Wash., D.C. Jan. 29, 1932.

Baker, S. and U. B. Gilroy
1933. Problems of Fishway Construction, Fish Ladders, Elevators, Mechanical Screens and Electrical Fields at Dams and Intakes, Civil Engineering Dec. 1933, p. 671-675.

Burrows, R. E.
1957. Diversion of Adult Salmon by an Electrical Field, U. S. Fish and Wildlife Serv., Spec. Sci. Report No. 246.

Fish-Passage Research Program
1964. The Accelerated Fish Passage Research Program - U.S. Bur. of Commercial Fisheries - Seattle, Wash., 5 vols. Dec. 1964 (See attachment)

Hoard, G. L. and C. Giese
1956. Determination of the material most suitable for electrodes in fish-guiding. Univ. of Wash., School of Fisheries, Tech., Rept. 32, 1956.

Holmes, H. B.
1948. History, development and problems of the electrical fish screen, U. S. Fish and Wildlife Service, Special Science Report, 1948, 53, 1-62.

Kuroki, Toshiro
1951. Studies on the electric fish-screen II. On the effects of
1952. stimuli by A. C., F.R.C., and H.R.C. (In Japanese with an English summary) Bulletin Japanese Society of Scientific Fisheries, 1951, 17 (5), 128-31. (Also abstracted in Biological Abstracts, 1952, 26, (12), entry 33829.)

Leitritz, Earl
1952. Stopping Them: The Development of Fish Screens in California Rotary, Bar, Electric and Perforated Plate Screens, Calif. Fish and Game, Vol. 38 No. 1 - Jan. 1952.

Lethlean, N. G.
1951- An investigation into the design and performance of electric
1953. fish-screens and an electric fish counter. Transactions of the Royal Society of Edinburgh, 1951-53, Vol. LXII, 479-526.

Mason, J.
1956. The status of field scale electrical fish guiding experiments, N. Pac. Div., Corps of Engr., progress report of Fisheries-Engineering Research Program, Nov. 1956.

Mayo, R. D. and W. T. James
1972. Rational Approach to the Design of Power Plant Intake Fish Screens using both Physical and Behavioral Screening Methods, Technical Reprint No. 15, Kramer, Chin & Mayo (Sept. 1972).

McMillan, F.O,
1928. Electric fish screen, Bull. U.S. Bur. of Fisheries 44.

Smith, Ph.D, E. D.
1966. Electric Shark Barrier Research (South Africa's) Geo-Marine Technology Circular for Nov. 1966, Vol.2, No. 10 10-14 pp.

Tsipliaev, A. S.
1973. Fish protective screening devices with water diversions. Leningrad Polytechnic Institute, Dept. of Hydraulics, USSR 166 pp.

U. S. Environmental Protective Agency
1973. Development document for proposed best technology available for minimizing adverse Environmental Impact of Cooling Water Intake Structures, U. S. Environmental Protective Agency, Dec. 1973.

U. S. Patents
(See attached list)

Verhoeven, L. A. and G. L. Hoard
Electro-guiding experiments on young salmon. I. Repulsion vs. attraction. Univ. of Wash., School of Fisheries, Tech. Rept. 37. (unpublished).

Verhoeven, L. A. and G. L. Hoard
Electro-guiding experiments on young salmon. II. Relationship to guiding efficiency of electrode arrangement, voltage gradient and velocity. Univ. of Wash., School of Fisheries, Tech. Rept. 38. (unpublished).

Verhoeven, L. A. and G. L. Hoard
Electro-guiding experiments on young salmon. III. Relative guiding efficiency of a.c., fullwave rectified a.c., halfwave rectified a.c., interrupted fullwave rectified a.c., and d.c. Univ. of Washington, School of Fisheries, Tech. Rept. No. 39 (unpublished)

Volz, C. D.
1962. Ignitron-pulsed electric fence guide migrating salmon. Electronics, Vol. 35, No. 16 p. 50-52.

F I L T E R

DeVries, J. J.
1973. Sand filters for screening at water diversions a feasibility study, Water Science and Engr. Papers No. 1053, Dept. of Water Science & Engr. Univ. of Calif., Davis, Nov. 1973.

Mayo, R. D. and W. T. James
1972. Rational Approach to the Design of Power Plant Intake Fish Screens using both Physical and Behavioral Screening Methods, Technical Reprint No. 15, Kramer, Chin & Mayo (Sept. 1972).

Richards, R. T.
1973. Intake for the Makeup Water Pumping System WPPSS Nuclear Project No. 2 prepared for Washington Public Power Supply System, (March 1973).

Stober, Q. J., E. O. Salo, and P. B. Swierkowski
1971. Model of a rapid sand filter for excluding small fishes from thermal power plant cooling water, Fisheries Research Institute, Univ. of Wash., Dec. 22, 1971.

Andrew, F. J.
1951. The Head-Discharge Relationships for Wire Screen in Plane and Cylindrical Forms. International Pacific Salmon Fisheries Commission, New Westminister, Canada.

Clay, C. H.
1961. Design of Fishways and Other Facilities, Chap. 6, Queen's Printer, Ottawa, Canada

Corps of Engineers
1962. Green Peter Fingerling Separator Plate Model, 8 progress reports on hydraulic model study on inclined screen, Corps of Engineers, Bonn. Hyd. Lab.

Corps of Engineers
1962. Green Peter Project, Middle Santiam River, Oregon Inclined-plane screen, Design Memo No. 13, Fish Facilities, March 1962.

Corps of Engineers
1962. Fall Creek Reservoir, Fall Creek, Oregon, Inclined Plate Screen, Design Memo No. 10, Spillway, Outlet Works and Fish Facilities, May 1962.

Eicher, George J.
1960. Fish-Bypass Experience at PGE's New Hydro Projects, General Description of the inclined screen and vertical mechanical screen placed at an angle to flow, March 1960, Electric Light and Power.

Erho, M. W.
1967. Evaluation of floating traps for collecting downstream migrating salmonids from the upper end of a reservoir, State of Washington Department of Fisheries, Jan. 1967.

Fish-Passage Research Program
1964. The accelerated Fish Passage Research Program, U. S. Bur. of Comm. Fisheries - Seattle, Wash., 5 vols. Dec. 1964. (See attachment)

Gerhardt, Paul
1904. FISCHWEGE UND FISHTEICHE, Leipzig, Germany, Verlag Von Wilheim Engelmann.

Gunsolus, Robert T. and George J. Eicher
1962. Evaluation of the fish passage facilities at Pelton Project on the Deschutes River in Oregon, Fish Commission of Oregon May1962.

Hamilton, J. A. R. and F. J. Andrew
1954. An investigation of the effect of Baker Dam on downstream migrant salmon. International Pacific Salmon Fisheries Commission, 1954, Bulletin VI, 1-73.

Hulen, Bill
1967. New trapping device, boon to fish study, inclined screen, Oregonian, Apr. 2, 1967.

Ingram, P. and L. Korn
1969. Evaluation of fish passage facilities at Cougar Dam on the South Fork McKenzie River in Oregon, Fish Commission of Oregon, Jan. 1969.

Kabel, C. S.
1971. El Solya Fish Screen Construction, final report, anadromous fish project, Calif. Dept. of Fish and Game.

Kupka, K. D.
1966. A downstream migrant diversion screen. The Department of Fisheries of Canada, The Canadian Fish Culturist, Issue 37, Aug. 1966.

Leitritz, Earl
1952. Stopping Them: The Development of Fish Screens in California Rotary, Bar, Electric and Perforated Plate Screens, Calif. Fish and Game, Vol. 38 No. 1 - Jan. 1952.

Richey, Eugene P.
1956. The Skimmer, a part of the downstream migrant system, Mayfield Fish Facilities Hydraulic Model Study of Inclined Screen, City of Tacoma, Dept. of Public Utilities, Sept. 14, 1956.

Smith, E. M. and L. Korn
1970. Evaluation of Fish Facilities and Passage at Fall Creek Dam on Big Fall Creek in Oregon, Fish Commission of Oregon, Oct. 1970.

Sonnichsen, J. C., Jr. B. W. Bentley, et. al.
1973. A Review of Thermal Power Plant Intake Structure Designs and Related Environmental Considerations prepared for the U. S. Atomic Energy Commission, Div. of Reactor Development and Technology, May 1973.

U. S. Environmental Protective Agency
1973. Development document for proposed best technology available for minimizing adverse Environmental Impact of Cooling Water Intake Structures, U. S. Environmental Protective Agency, Dec. 1973.

U. S. Patents
(See attached list)

Univ. of Wash. Hydraulic Laboratory
1954. Length of flow over inclined screens, Univ. of Wash. Hyd. Lab. experiment, unpublished memo report, 1954.

Wagner, E. and P. Ingram
1973. Evaluation of Fish Facilities and Passage at Foster and Green Peter Dams on the South Santiam River Drainage in Oregon.

L I G H T S

Andrew, F. J. and G. H. Green
1960. Sockeye and pink salmon production in relation to proposed dams in the Fraser River System, International Pacific Salmon Fisheries Commission, Bull. XI, New Westminister, BC, Canada.

Bibko, P., et. al.
1973. Effects of Light and Bubbles on the Screening Behavior of the Striped Bass, Westinghouse Environmental Systems, paper presented at the Entrainment and Intake Screening Workshop - John Hopkins Univ. Feb. 8, 1973.

Brett, J. R., and D. MacKinnon
1952. Experiments using lights and bubbles to deflect migrating young spring salmon. Progress Reports of the Pacific Coast Stations, Fish. Res. Bd., Canada, No. 92, 14-15.

Brett, J. R., and D. MacKinnon
1953. Preliminary experiments using lights and bubbles to deflect migrating young spring salmon. J. Fish. Res. Bd., Canada, 1953, 10, 548-559.

Craddock, D. R.
1956. A review of studies in guiding downstream migrating salmon with light, N. Pac. Div., Corps of Engr. pregress report on Fisheries Engr. Research Program, Nov. 1956.

Fields, P. E., G. L. Finger, R. J. Adkins and R. Pyke
1954. Factors influencing the efficiency of light barriers in the guidance of young salmonidae. Univ. of Wash. School of Fisheries, Tech. Rept. 8. 1-25.

Fields, P. E., G.L. Finger, R. J. Adkins, R. E. Carney, and R. A. Pyke
1955. A factorial study of the response of steelhead trout, chinook and silver salmon fingerlings to light barriers in moving water. Univ. of Wash. School of Fisheries, Tech. Rept. 11. 1-11. June 1955.

Fields, P. E., R. J. Adkins, R. E. Carney and G. L. Finger
1955. The reaction of young silver salmon and steelhead trout to infrared light barriers. Univ. of Wash. School of Fisheries, Tech. Rept. 14. 1-8. Feb. 1955.

Fields, P. E., R. J. Adkins, R. E. Carney and G. L. Finger
1955. The effect of four light conditions upon the impingement of year plus steelhead trout, silver and chinook salmon. Univ. of Wash. School of Fisheries, Tech. Rept. 18. 1-9. Aug. 1955.

Fields, P. E., D. E. Johnson, G. L. Finger, R. J. Adkins, and R. E. Carney
1956. A field test of the effectiveness of two intensities of shaded and unshaded lights in guiding downstream migrant salmon. Univ. of Wash. School of Fisheries, Tech. Rept. 21. 1-33. March. 1956.

Fields, P. E. and G. L. Finger
1956. The effectiveness of constant and intermittently flashing light barriers in guiding silver salmon. Univ. of Wash. School of Fisheries, Tech. Rept. 22. 1-23. March 1956.

Fields, P. E. and A. K. Murray
The response of young silver salmon to a light barrier after three levels of light adaptation. Univ. of Wash. School of Fisheries, Tech. Rept. 27. (Unpublished).

Fields, P. E.
1956. Guiding downstream migrant salmon and steelhead trout: A research summary. Univ. of Wash. School of Fisheries, August 15, 1956.

Fields, P. E.
1956. Guiding downstream migrant salmon and steelhead trout. A research summary. N.Pac. Div. Corps of Engineers, Progress report on Fisheries Engr. Research Program. Nov. 1956.

Fields, P. E., A. K. Murray, D. E. Johnson, and G. L. Finger
1958. Guiding migrant salmon by light repulsion and attraction in fast and turbid water. 1958, 44 pp.

Fields, P. E., D. E. Johnson, and Sayed Z. El-Sayed
1959. The 1958-59 McNary Dam light guiding studies. 1959, 25 pp.

Fields, P. E.
1964. Migrant Salmon Light-Guiding Studies at Columbia River Dams. Final Report to the U. S. Army Corps of Engineers Under Contract No. DA-45-108-CIVENG-63-29. 247 pp.

Fields, P. E.
1966. Migrant salmon light-guiding studies at Columbia River Dams, N. Pac. Div., Corps of Engr., Progress Report of Fisheries Engr. Research Program, March 1966.

University of Washington
1960. Guiding downstream migrant salmon and steelhead trout, No.Pac. Div., Corps of Engineers, ProgressReport on Fisheries-Engineering Research Program, July 1960.

Fry, D. E.
1950. Moving lights lure fish past diversion channels. Electrical World, 1950, 133, No.15, 112.

L O U V E R S

Andrew, F. J. and G. H. Green
1960. Sockeye and pink salmon production in relation to proposed dams in the Fraser River System, International Pacific Salmon Fisheries Commission, Bull. XI, New Westminister, BC, Canada.

Babbe, A. F.
1966. Effects of Structural Geometry on the Velocity Distribution Patterns in the Delta Fish Protection Facilities - Hydraulic Model Studies on Louvers - 2 volumes - Water Science and Engr. papers 1012, Dept. of Water Resources, State of Calif. May 1966.

Bates, D. W. and R. Vinsonhaler
1957. Use of louvers for guiding fish - Transaction of the American Fisheries Society, Vol. 86 p. 38-57.

Bates, D. W., P. Logan and E. A. Personen.
1960. Efficiency Evaluation Tracy Fish Collecting Facility, Central Valley Project California, U. S. Bureau of Reclamation, Reg. 2, Sacramento, California.

Bates, E. W. and S. G. Jewett, Jr.
1961. Louver Efficiency in Deflecting Downstream Migrant Steelhead Transaction of the American Fisheries Society, Vol. 90., No. 3, p. 335-337.

Clay, C. H.
1961. Design of Fishways and Other Facilities, Chap. 6, Queen's Printer, Ottawa, Canada.

Cornell, Howland, Hayes and Merryfield
1962. Engineering Study - Downstream Migrant Fish Screening Facility for Willamette Falls Area, Oregon City, Oregon, Oregon State Game Commission, Portland, Oregon, June 1962.

Fish-Passage Research Program
1964. The Accelerated Fish Passage Research Program - U. S. Bur. of Commer. Fisheries - Seattle, Wash., 5 vols. Dec. 1964. (See attachment)

Holubetz, T. B.
1967. Evaluation of a Louver Guidance Facility used to Sample Salmon and Trout Emigrants, State of Idaho, Fish and Game Dept. Federal Aid Project F49-R-4, June 1967.

Pollock, Robert D.
1969. Tehama-Colusa Canal to Serve as Spawning Channel, U. S. Fish and Wildlife Service, The Progressive Fish-Culturist, Vol. 31, No. 3, July 1969.

Richards, R. T.
1973. Intake for the Makeup Water Pumping System WPPSS Nuclear Project No. 2 prepared for Washington Public Power Supply System, (March 1973).

Rothfus, L. and J. S. Thompson
1964. Preliminary report - Mayfield Dam Downstream Migrant Fish Facility Evaluation Program, State of Washington Dept. of Fisheries, Dec. 18, 1964.

Rothfus, L. and J. S. Thompson
1966. Preliminary report - Mayfield Dam Downstream Migrant Fish Facility Evaluation Program, State of Washington Dept. of Fisheries, Jan. 11, 1966.

Ruggles, C. P. and P. Ryan
1964. An Investigation of Louvers as a Method of Guiding Juvenile Pacific Salmon, The Dept. of Fisheries of Canada, The Canadian Fish Culturist, Issue 33, Nov. 1964.

Schuler, V. J. and L. E. Larson
1973. Ichthyological Associates and Southern California Edison Co., Fish Guidance and Louver Systems at Pacific Coast Intake Systems, paper presented at the Entrainment and Intake Workshop, The John Hopkins University (Feb. 8, 1973).

Skinner, J. E.
1973. California Dept. of Fish and Game, Evaluation of Large Functional Louver Screening Systems and Fish Facilities, Research on Calif. Water Diversion Projects, paper presented at the Entrainment and Intake Workshop, The John Hopkins Univ., (Feb. 8, 1973).

Sonnichen, J. C., Jr., B. W. Bentley, et. al.
1973. A Review of Thermal Power Plant Intake Structure Designs and Related Environmental Considerations prepared for the U. S. Atomic Energy Commission, Div. of Reactor Development and Technology, May 1973.

Strausser, H. S. and E. P. Richey
1960. Downstream migrant separation facilities, hydraulic model studies of louvers, City of Tacoma, Dept. of Public Utilities, Feb. 1960.

Strausser, H. S. and Nece, R.E.
1961. Bypass entrance study, hydraulic model study of louver bypass, City of Tacoma, Dept. of Public Utilities, April 1961.

Thompson, J. S. and G. J. Paulik
1967. An evaluation of louvers and bypass facilities for guiding seaward migrant salmonids past Mayfield Dam in Western Washington, State of Wash., Dept. of Fisheries, Sept. 1967.

Thompson, J. S. and L. Rothfus
1969. Biological observations of salmonids passing Mayfield Dam State of Wash. Dept. of Fisheries, March 1969.

U. S. Department of the Interior, Bureau of Reclamation, Sacramento, Calif.
1957. Fish Protection at the Tracy Pumping Plant, Development of a Fish Salvage Facility. Feb. 1957.

U. S. Enviromental Protective Agency
1973. Development document for proposed best technology available for minimizing adverse Environmental Impact of Cooling Water Intake Structures, U. S. Environmental Protective Agency, Dec. 1953.

State of California
1973. Evaluation Testing Program Report for Delta Fish Protective Facility, State Water Facilities, California Aqueduct, North San Joaquin Division, Dept. of Water Resources and Dept. of Fish and Game, memorandum report, 1973.

N E T

Andrew, F. J. and G. H. Green
1960. Sockeye and pink salmon production in relation to proposed dams in the Fraser River System, International Pacific Salmon Fisheries Commission, Bull. XI, New Westminister, BC, Canada

Fish-Passage Research Program
1964. The Accelerated Fish Passage Research Program, U. S. Bur. of Commercial Fisheries - Seattle, Wash., 5 vols., Dec. 1964. (See attachment)

Graban, J. R.
1964. Evaluation of fish facilities, Brownlee and Oxbow Dams, State of Idaho, Fish and Game Department, May 1964.

Haas, James B.
1965. Fishery problems associated with Brownlee, Oxbow, and Hells Canyon Dams in the Middle Snake River. Investigational report No. 4, Fish Commission of Oregon, Jan. 1965.

Tinney, Roy E. and H. D. Copp
1958. Mathematical analysis and model studies of the downstream migrant fish barriers, Brownlee Hydro. Development, Div. of Industrial Research, State College of Washington, R. L. Albrook Hyd. Lab. Nov. 1958.

PERFORATED PIPE

Alam, S., Parkinson, F. E., Hawsser
1974. Air and Hydraulic Model Studies of the Perforated Pipe Inlet and Protective Dolphin, Washington Public Power Supply System, Lasalle Hydraulic Laboratory, Ltr., Feb. 1974.

Richards, R. T.
1973. Intake for the Makeup Water Pumping System WPPSS Nuclear Project No. 2 prepared for Washington Public Power Supply System. (March 1973).

U. S. Environmental Protection Agency
1973. Development document for proposed best technology available for minimizing adverse Environmental Impact of Cooling Water Intake Structures, U. S. Environmental Protection Agency, Dec. 1973.

PERFORATED PLATE

U. S. Environmental Protection Agency
1973. Development document for proposed best technology available for minimizing adverse Environmental Impact of Cooling Water Intake Structures, U. S. Environmental Protection Agency, Dec. 1973.

Wales, J. H., E. W. Murphy and John Handley
1950. Perforated Plate Fish Screens, Calif. Dept. of Fish and Game, Vol. 36, No. 4, Oct. 1950.

PUMPS, FISH

Dokukin, M. M.
1972. Examination of fish pumps after pumping juvenile fish, Bybroe Khozyaistvo, No. 9, Moskva, Sept. 1972, p. 35-37.

Kovalev, V. M.
1971. The effect of fish concentration of hydraulic resistance in a fish air lift at low air content, Proceeding of the All-Union Research Institute of Marine Fisheries and Oceanography, No. 5 96-103.

Robinson, John B.
1969. Effects of Passing Juvenile King Salmon through a pump, Anadromous Fisheries Administrative Report No. 69-1 (March 1969) State of Calif., Dept. of Fish and Game.

Robinson, John B.
1971. Effects of Passing Juvenile Steelhead, Rainbow Trout and a Hatchery Strain of Rainbow Trout through a volute pump. Anadromous Fisheries Administrative Report No. 72-3, State of Calif., Dept. of Fish and Game, June 1971.

Soil Conservation Service
1967. An Investigation of pumping effects on salmonids, French Creek Pumping Plant, Snohomish County, Wash., Feb.-Mar. 1967, Preliminary Draft Report 4/14/67.

Summers, F.E.
1951. Fish pumping experiment, conducted at Coleman Station Hatchery, July 30, 1951, Bur. of Sport Fish. and Wildlife 6 pp.(unpublished).

State of California
1974. Fish Facility Program, State of Calif., Dept. of Fish and Game and Dept. of Water Resources, Bay-Delta Fishery Proj. Monthly Progress Repts, Apr. 1974, p. 4 - May 1974, p. 3&4 - June 1974, pp 5-8 - July 1974, pp 3-5, Aug. 1974, pp 4-6 - Sept. 1974, pp 6-8 - Oct.1974,p.6.

S O U N D

Andrew, F. J. and G. H. Green
1960. Sockeye and pink salmon production relation to proposed dams in the Fraser River System, International Pacific Salmon Fisheries Commission, Bull. XI, New Westminister, BC. Canada

Burner, C. J. and H. L. Moore
1953. Attempts to guide small fish with underwater sound. Spec. Sci. Rept.: Fish., U.S. Fish and Wildlife Service, No. 11, 38 pp.

Corthuys, H. J.
A brief summary of the Literature on Subaqueous sound prepared for U. S. Fish and Wildlife (not published).

Fish-Passage Research Program
1964. The Accelerated Fish Passage Research Program - U. S. Bur. of Comm. Fisheries - Seattle, Wash., 5 vols. Dec. 1964. (See attachment)

Mayo, R. D. and W. T. James
1972. Rational Approach to the Design of Power Plant Intake Fish Screens using both Physical and Behavioral Screening Methods, Technical Reprint No. 15, Kramer, Chin & Mayo (Sept. 1972).

Moore, H. L. and H. W. Newman
1956. Effects of sound waves on young salmon. U. S. Fish and Wildlife Service, Special Science Report, 1956, 172, 1-19.

State of California
1965. Fish Screens, Delta Fish and Wildlife Protection Study, State of Calif. Dept. of Fish and Game and Dept., Water Resources Report No. 4, June 1965, pp 8-10.

U. S. Patents
(See attached list)

T H E R M A L

Mayo, R. D. and W. T. James
1972. Rational Approach to the Design of Power Plant Intake Fish Screens using both Physical and Behavioral Screening Methods, Technical Reprint No. 15, Kramer, Chin & Mayo (Sept. 1972).

T R A V E L I N G, H O R I Z O N T A L

Bates, D. W.
1970. Diversion and Collection of Juvenile Fish with Traveling Screens, U. S. Bureau of Commercial Fisheries, Fishery Leaflet No. 633, March 1970.

Bates, D. W., E. W. Murphey and E. F. Prentice
1970. Design and Operation of a Cantilevered Traveling Fish Screen (model V). In Preliminary designs of traveling screens to collect juvenile fish, p. 6-15. U. S. Fish and Wildlife Service, Spec. Sci. Rep. Fish. 608.

Bates, D. W., and J. G. Vanderwalker
1970. Traveling screens for collection of juvenile salmon (models I and II). In Preliminary designs of traveling screens to collect juvenile fish, p. 1-5. U. S. Fish and Wildlife Service, Spec. Sci. Report . Fish. 608.

Bates, D. W., E. W. Murphy, and M. G. Beam
1971. Traveling Screen for Removal of Debris from Rivers, U. S. Dept. of Commerce, NOAA Technical Report NMFS SSRT-645.

Beck, R. W. and Associates
1966. Traveling Cantilevered Fish Screen and Suspension Structure, Sept. 1966.

Farr, W. E. and E. F. Prentice
1973. Summary Report - Mechanical Operation of Horizontal Traveling Screen Model VII, NOAA, NMFS, Northwest Fisheries Center, Seattle, Wash., Sept. 1973.

Fish-Passage Research Program
1964. The Accelerated Fish Passage Research Program - U. S. Bureau of Commercial Fisheries - Seattle, Wash., 5 vols., Dec. 1964. (See attachment)

Mayo, R. D. and W. T. James
1972. Rational Approach to the Design of Power Plant Intake Fish Screens using both Physical and Behavioral Screening Methods, Technical Reprint No. 15, Kramer, Chin & Mayo (Sept. 1972).

Prentice, E. F. and F. J. Ossiander
1973. Summary Report - Biological Investigation of Horizontal Traveling Screen Model VII, NOAA, NMFS, Northwest Fisheries Center, Seattle, Wash., Sept. 1973.

Rex
1974. Rex screening equipment, Envirex, Waukesha, WI 53186, Bull. No. 316-300, 1974.

Richards, R. T.
1973. Intake for the Makeup Water Pumping System WPPSS Nuclear Project No. 2 prepared for Washington Public Power Supply System, (March 1973).

Sonnichsen, J.C., Jr. B. W. Bentley, et. al.
1973. A Review of Thermal Power Plant Intake Structure Designs and Related Environmental Considerations prepared for the U. S. Atomic Energy Commission, Div. of Reactor Development and Technology, May 1973.

State of California
1965. Fish Screens, Delta Fish and Wildlife Protection Study, State of California Departs of Fish and Game and Dept. of Water Resources, Report No. 4, June 1965. p. 8-10.

U. S. Patents
(See attached list)

T R A V E L I N G, I N C L I N E

Fish-Passage Research Program
1964. The Accelerated Fish Passage Research Program - U. S. Bureau of Commercial Fisheries - Seattle, Wash., 5 vols. Dec. 1964 (See attachment)

Jewett, Stanley G., Jr.
1965. Memorandum on proposed design of an inclined plane traveling screen to Program Dir., Col.Fish Program Office, BCF, Portland, Oregon, April 27, 1965.

Long, C. W., R. F. Kroma
1969. Research on a System for Bypassing Juvenile Salmon and Trout Around Low-Head Dams. U.S. Fish and Wildlife Service, Commercial Fisheries Review. June 1969.

Mayo, R. D. and W. T. James
1972. Rational Approach to the Design of Power Plant Intake Fish Screens using both Physical and Behavioral Screening Methods, Technical Reprint No. 15, Kramer, Chin & Mayo, (Sept. 1972).

Mueller, A. C. and J. R. Orsborn
1969. Hydraulic Model Studies of a Fish Guidance Screen, Albrook Hyd. Lab., Wash. State Univ., Research Report No. 69/9-75.

U. S. Patents
(See attached list)

T R A V E L I N G, V E R T I C A L

Andrew, F. J. and G. H. Green
1960. Sockeye and pink salmon production in relation to proposed dams in the Fraser River System, International Pacific Salmon Fisheries Commission, Bull. XI, New Westminister, BC, Canada

Campbell, H. J.
1958. Fish escapement study, Marmot screens, Oregon State Game Commission, Fishery Civ., Annual Report 1958, p. 276-277.

Corps of Engineers
1958. Fish passage facilities, Bonneville Dam, screens for aux.-water supply systems, Information Bull., Bonn. Hyd. Lab., U. S. Army Engineer Dist., Portland, OR, Report No. 66-1 - April 1958 pp. 50-51, Fig. 4, Plates 4, 5, 6, 7, 14 & 20.

Cornell, Howland, Hayes and Merryfield
1962. Engineering Study - Downstream Migrant Fish Screening Facility for Willamette Falls Area, Oregon City, Oregon, Oregon State Game Commission, Portland, Oregon, June 1962.

Clay, C. H.
1961. Design of Fishways and Other Facilities, Chap. 6, Queens Printer, Ottawa, Canada.

Eicher, George J.
1960. Fish-Bypass Experience at PGE's New Hydro Projects, General Description of the inclined screen and vertical mechanical screen placed at an angle to flow, March 1960, Electric Light and Power.

Holmes, Harlan B.
1964. Rehabilitation of Savage Rapids Fish Screens, Rogue River, Bur.of Sports Fish and Wildlife, Region 1, Dept. of Interior, June 1964.

Kerr, J. E.
1953. Studies of Fish Preservation at the Contra Costa Steam Plant of the Pacific Gas and Electric Co., State of Calif., Dept.of Fish and Game, Bull. No. 92, 1-66.

FMC Corporation
1974. No-Well Traveling Water Screen, Link-Belt, F.M.C. Corporation Catalog 6940.

Mayo, R. D. and W. T. James
1972. Rational Approach to the Design of Power Plant Intake Fish Screens using both Physical and Behavioral Screening Methods, Technical Reprint No. 15, Kramer, Chin & Mayo (Sept. 1972).

Oregon State Game Commission
1956. The Control of Downstream Migrants by means of Mechanical Screens, (Rex Traveling Water Screen) N.Pac. Div., Corps of Engr., progress report on Fisheries-Engineering Research Program, Nov. 1956.

Oregon State Game Commission
1960. The Control of Downstream Migrants by Means of Mechanical Screens, North Pac. Div., Corps of Engineers, Progress Report on Fisheries-Engineering Research Program, July 1960.

Rex
1974. Rex screening equipment, Envirex, Waukesha, WI 53186, Bull. No. 316-300, 1974.

Rex Chainbelt, Inc.
1968. Rex Water Screening Equipment, Bull. No. 316-068, Rex Chainbelt, Inc.

Richards, R. T.
1967. Fish Protection at Circulating Water Intake, Burns and Roe, Inc., unplublished research paper, May 11, 1967.

Richards, R. T.
1973. Intake for the Makeup Water Pumping System WPPSS Nuclear Project No. 2 prepared for Washington Public Power Supply System, (March 1973).

Riesbal, H. S. and R. J. L. Gear
1972. Application of Mechanical Systems to Alleviation of Intake Entrapment Problems, presented at the Atomic Industrial Forum, Conference on Water Quality Considerations, Wash., D.C. Oct. 2, 1972.

Rounsefell, Ph.D George A. and W. Harry Everkart, Ph.D
1953. Fishery Science, Chap. 12, John Wiley and Sons, Inc., New York

Schreiber, D. L., et. al.
1973. Appraisal of Water Intake Systems on the Central Columbia River to Washington Public Power Supply System (March 1973).

Sonnichsen, J. C., Jr., B. W. Bentley, et. al.
1973. A Review of Thermal Power Plant Intake Structure Designs and Related Environmental Considerations prepared for the U. S. Atomic Energy Commission, Div. of Reactor Development and Technology, May 1973.

U. S. Environmental Protection Agency
1973. Development document for proposed best technology available for minimizing adverse Enviromental Impact of Cooling Water Intake Structures, U. S. Environmental Protection Agency, Dec. 1973.

VonGunten, G. H., H. A. Smith, Jr., and B. M. Maclean
1956. Fish Passage Facilities at McNary Dam, Auxiliary Water Supply System, A.S.C.E. Power Division Journal, Paper No. 895, Feb. 1956, pp 17-18.

Wagner, Harry H.
1959. The size and location of escape ports for bypassing salmonid fish at a screened diversion canal. Master's thesis, Corvallis, Oregon State College, 1959. 76 numb. leaves.

V E L O C I T Y

Fish-Passage Research Program
1964. The Accelerated Fish Passage Research Program - U. S. Bureau of Commercial Fisheries - Seattle, Wash., 5 vols., Dec. 1964 (See attachment)

V E L O C I T Y C A P

Sonnichsen, J. C., Jr., B. W. Bentley, et. al.
1973. A Review of Thermal Power Plant Intake Structure Designs and Related Environmental Considerations prepared for the U. S. Atomic Energy Commission, Div. of Reactor Development and Technology, May 1973.

Spencer, R. W. and John Bruce
1960. Cooling Water for Steam Electric Stations on Tidewater, A.S.C.E. Journal of Power Division, No. 2503, June 1960.

U. S. Enviromental Protection Agency
1973. Development document for proposed best technology available for minimizing adverse Environmental Protection Agency, Dec. 1973.

Weight, Robert H.
1958. Ocean Cooling Water System for 800 MW Power Station, A.S.C.E. Power Division Proceeding Paper No. 1888, Dec. 1958.

W E L L P O I N T

Johnson Screens
1969. John Screens, catalog 169, Universal Oil Products Company, Johnson Div., St. Paul, Minn.

Johnson Screens
1972. Johnson Screens Modernize Water-Intake Design - Universal Oil Products Co., Johnson Div., St. Paul, Minn. Bull. No. 1071, March 1972.

W I R E S C R E E N

Fingado, R. P.
1971. The Sacramento River Debris Study, State of Calif., Dept. of Water Resources, Central District, Memorandum Report

Tsipliaev, A. S.
1973. Fish protective screening devices with water diversions Leningrad Polytechnic Institute, Dept. of Hydraulics, USSR 166 pp.

U. S. Patents
(See attached list)

Schreiber, D. L., et. al.
1973. Appraisal of Water Intake Systems on the Central Columbia River to Washington Public Power Supply System (March 1973).

B I O L O G I C A L
(Swimming Ability, Size, Behavior, Etc.)

Adkins, R. J. and P. E. Fields
1957. The conditioning of yearling steelhead (Salmo gairdneri) to colored lights. Univ. of Wash., School of Fisheries, Tech. Report 33.

Andrew, F. J. and G. H. Green
1960. Sockeye and pink salmon production in relation to proposed dams in the Fraser River System, International Pacific Salmon Fisheries Commission, Bull. XI, New Westminister, BC, Canada

Aserinsky, E., G. L. Hoard, R. E. Nakatani and L. A. Verhoeven
1954. Factors in pulsated direct current which cause electrotaxis and side effects in young salmon. Univ. of Wash., School of Fisheries, Tech. Rept. No. 5.

Baranyak, G. F. and Tichomerov
1969. Observations on Water Intake and Discharge Installations of Ali-Bairamlinsky Thermal Station in Relation to the Problem of Fish Protection - USSR

Bell, M. C.
1973. Fisheries Handbook of Engineering Requirements and Biological Criteria, U. S. Army Engr. Division, North Pacific Corps of Engr. Portland, Oregon - Feb. 1973.

Brett, J.R., D. MacKinnon, and D. F. Alderdice
1954. Trough experiments on guiding sockeye salmon fingerlings. Progress Reports of the Pacific Coast Stations, Fish. Res. Bd. Canada, 1954, No. 99, 24-27.

Bull, H. O.
1928. Studies on conditioned responses in fishes. Part I. J. Mar. Biol. Assoc. U. K., 15(2): 485-533.

Bull, H. O.
1930. Studies on conditioned responses in fishes. Part II. J. Mar. Biol. Assoc. U.K., 16(2): 615-637

Burner, C. J.
1949. Vertical distribution of downstream migrating chinook salmon fingerlings in the Bonneville forebay, with a note upon the rate of migration. Unpublished data U. S. Fish and Wildlife Service memorandum of Dec. 16, 1949 to J. T. Barnaby from C. J. Burner.

Carney, R. E. and R. J. Adkins
1955. Reactions of young silver salmon in ten velocity combinations. Univ. of Wash. School of Fisheries, Tech. Rept. 23, 1-15, Aug.,1955.

Clancy, Dan W.
1958. Report on swimming ability of chules, squawfish and suckers in a rotating circular tank, Washington Water Power Co., July 1958 (unpublished)

Clay, C. H.
1961. Design of Fishways and Other Facilities, Chap. 6, Queen's Printer, Ottawa, Canada

Collins, G. B. and C. H. Elling
1966. The Accelerated Fish Passage Research Program of the U. S. B.C.F. - Summary of Progress through 1964, No. Pac. Div., Corps of Engr. third progress report on Fisheries Engineering Research Program March 1966.

Delacy, A. C., S. P. Felton, and G. J. Paulik
1956. A study to investigate the effects of fatigue and current velocities on adult salmon and steelhead trout. Progress Rpt. on Fisheries Engineering Research Program, N. Pac. Div., Corps of Engineers, U. S. Army, Nov. 1956 pp. 126-138.

Denil, G.
1936. The mechanics of the river Fish Annalex dea Travaux Publics Belgique, Vol. 37 Nos. 4 & 5, Vol. 38 Nos. 1, 2, 3, 4,5 and 6; Vol. 39, Nos. 1, 2, 3 and 4.

Fields, P. E. and G. L. Finger
1954. The reaction of young salmonidae to light. Univ. of Wash. School of Fisheries, Tech. Rept. 2. 1-20.

Fields, Paul E., G. L. Finger, and L. A. Verhoeven
1954. Effect of electric shock upon the light avoiding behavior of young silver and blueback salmon. University of Washington, School of Fisheries, Tech. Rept. No. 2, 1954.

Fields, P. E., G. L. Finger, and L. A. Verhoeven
1954. The effect of electric shock upon the light avoiding behavior of young silver and blueback salmon. Univ. of Washington School of Fisheries, Tech. Rept. 3, 1-19, 1954.

Fields, P. E. and G. L. Finger
1954. The reaction of five species of young Pacific salmon and steelhead trout to light. Univ. of Wash. School of Fisheries, Tech. Rept. 7 1-24.

Fields, P. E., R. J. Adkins, and G. L. Finger
1954. The swimming ability of immature silver salmon (Oncorhynchus kisutch) measured in an experimental flume. Univ. of Washington School of Fisheries, Tech. Rept. 9. 1-22.

Fields, P. E.
1954. The effect of electric lights upon the upstream passage of spawning sockeye salmon (Oncorhynchus nerka) through the Univ. of Wash. fish ladders. Univ. of Wash. School of Fisheries, Tech. Rept. 10 1-11

Fields, P. E., D. E. Johnson, G. L. Finger, R. J. Adkins and R. E. Carney
1955. The effect of various electrical treatments upon equilibrium, swimming ability and light avoidance of silver salmon. Univ. of Wash. School of Fisheries, Tech. Rept. 20. 1-46. Dec. 1955.

Fields, P. E.
1964. Vertical Distribution of Downstream Migrant Salmonids at the McNary Dam, Oregon, Intake Structure. Univ. of Wash., Coll. of Fisheries, Tech. Rept. 53. p. 11-42.

Fields, P. E.
1964. Diverting Downstream Migrants from the McNary Dam Turbines into the Trash Sluiceway and Emergency Gate Slots. Univ. of Wash., Coll. of Fisheries, Tech. Rept. 55. p. 81-110.

Fields, P. E.
1964. Effect of Powerhouse Lights on Salmonid Tow Net Catches at McNary Dam. Univ. of Wash., Coll. of Fisheries, Tech. Rept. 56. p. 111-136.

Fields, P. E.
Nature of the Downstream Migrant's Response to Light Patterns at The Dalles Dam. Univ. of Wash., Coll. of Fisheries, Tech. Rept. 57. p. 137-153.

Fish-Passage Research Program
1964. The Accelerated Fish Passage Research Program - U. S. Bureau of Commercial Fisheries - Seattle, Wash., 5 vols., Dec. 1964. (See attachment)

Greenland, Donald C.
1969. Fish Eggs and Spawning Habits Pertinent to the design of fish screening facilities, information tabulated for Fish Facilities Section, BCF, Col. Fisheries Program Office, Portland, Oregon

Greenland, D. C. and A. E. Thomas
1969. Swimming speed of fall chinook salmon fry, Bur. of Commercial Fisheries, Col. Fish Program Office, Portland, Oregon (unpublished)

Hoar, W. S.
1951. The behavior of chum, pink and coho salmon in relation to their seaward migration. J. Fish. Res. Bd. Canada, 1951, 8, 241-263.

Hoar, W. S.
1954. The behavior of juvenile Pacific Salmon with particular reference to the sockeye (Oncorhynchus nerka). J. Fish Res. Bd. Canada, 1954, 11, 69-97.

Hoard, G. L.
1956. Effects of electrode geometry and water conductivity on the shock received by fish in an electrical field. Univ. of Washington, School of Fisheries, Tech. Rept. 24. (unpublished).

Jenson, L. D. and D. K. Brady
1971. Aquatic Erosystems and Thermal Power Plants. Proceedings of the ASCE, Power Div., Jan. 1971.

Johnson, D. E., P. E. Fields, P. S. Karekar and G. L. Finger
1958. Conditions under which light attracts and repels premigratory salmon in clear and turbid, still and running water. 1958, 15 pp.

Johnson, D. E., R. E. Nakatani and S. P. Felton
1956. The effects of electroshock (A.C.) upon tissue content of inorganic phosphate and lactic acid in yearling silver salmon. 1956, 6 pp.

Johnson, D. E. and P. E. Fields
1959. The orientation of sexually mature male salmon to simulated star patterns. 1959, 9 pp.

Johnson, D. E., R. E. Nakatani, and S. P. Felton
The effects of electroshock (A.C.) upon tissue content of inorganic phosphate and lactic acid. Univ. of Wash. School of Fisheries, Tech. Rept. 26. (Unpublished)

Johnson, D. E. and P. E. Fields
The application of conditioning techniques to the problem of guiding downstream migrant salmon. Univ. of Wash. School of Fisheries, Tech. Rept. 35. (Unpublished)

MacPhee, C. and F. J. Watts
1973. Swimming Performance and Migratory Behavior of Arctic Grayling, Alaska, Progress Report to Bur. of Sport Fisheries and Wildlife, Dec. 21, 1973.

Mayo, R. D. and W. T. James
1972. Rational Approach to the Design of Power Plant Intake Fish Screens using both Physical and Behavioral Screening Methods. Technical Reprint No. 15, Kramer, Chin & Mayo (Sept. 1972).

Moyer, Stanley and E. C. Raney
1969. Thermal Discharges from Nuclear Plant, A.S.C.E., Journal of Sanitary Engr. Division, No. 6983, Dec. 1969.

Murray, A. K and P. E. Fields
1957. Response of steelhead trout (Salmo gairdneri) to continuous fixed interval and fixed ratio reinforcement schedules. 1957, 10 pp.

Nakatani, R. E.
1954. The average specific electrical resistance of some salmonids. Univ. of Wash., School of Fisheries, Tech. Rept. No. 4, 1954.

Nakatani, R. E.
1955. Effects of electroshock on some blood constituents of salmon: I. Inorganic phosphate and hematocrit values of the blood of young silver salmon. Univ. of Wash., School of Fisheries, Tech. Rept. No. 15, 1955.

Newman, H. W.
1956. Study of the effects of magnetic fields on salmon, N.Pac.Div., Corps of Engr. progress report on Fisheries-Engineering Research Program, Nov. 1956.

Pavlov, D. S.
1970. Optomotor Reaction and Peculiarities of Orientation of Fish in Flowing Water, Moscow, USSR 1970.

Pavlov, D. S. and A. M. Pakhorukov
1973. Biological basis of protecting fish from entry into water intake structures. Pishchevaya Promyshennost', Moscow, 1973, 208 pp.

Rees, W. H.
1956. Determination of the vertical and horizontal distribution of seaward migrants, Baker Dam, N.Pac. Div., Corps of Engrs. progress report on Fisheries-Engineering Research Program, Nov. 1956.

Robbins, T. W.
1970. Studies of Fishes in the Muddy Rnn Pumped Storage Reservoir and Connecting Waters - Summary - Ichthyological Associates, Misc. Report No. 4, May 1, 1970, 35 pp.

Skinner, J. E.
1969. Considerations for the development of fish facilities and operational criteria related to the Peripheral Canal, Internal Rept., Calif. Dept. of Fish and Game, Nov. 1969 (unpublished).

Sonnichsen, J. C., Jr., B. W. Bentley, etc. al.
1973. A Review of Thermal Power Plant Intake Structure Designs and Related Environmental Considerations prepared for the U. S. Atomic Energy Commission, Div. of Reactor Development and Technology, May 1973.

Spindler, John C.
1955. Loss of game fish in relation to physical characteristics of irrigation-canal intakes, the Journal of Wildlife Management, Vol. 19, No. 3, July 1955.

State of California
1974, Fish Facility Program, State of Calif., Dept. of Fish and Game and Dept. of Water Resources, Bay-Delta Fishery Project, Monthly Progress Reports - April 1974, p. 4; May 1974, pp 3 & 4; June 1974 pp. 5-8; July 1974, pp 3-5; August 1974, pp 4-6; Sept. 1974, pp 6-8; Oct. 1974, p. 6.

Thomas, A. E., J. L. Banks and D. C. Greenland
1969. Effect of yolk sac absorption on the swimming ability of fall chinook salmon, American Fisheries Society Transactions Vol. 98, No. 3 - July 1969.

(Swimming Ability, Size, Behavior, Etc.)

Tsipliaev, A. S.
1973. Fish protective screening devices with water diversions Leningrad Polytechnic Institute, Dept. of Hydraulics, USSR 166 pp.

U. S. Environmental Protection Agency
1973. Development document for proposed best technology available for minimizing adverse Environmental Impact of Cooling Water Intake Structures, U. S. Environmental Protection Agency, Dec. 1973.

University of Washington
1960. A study to determine the effects of electricity on salmon and steelhead trout, N.Pac. Div., Corps of Engr., Progress Report on Fisheries-Engineering Research Program, July 1960.

Verhoeven, L. A., G. L. Hoard, and R. E. Nakatani
1955. A summary report on research accomplished to date and future plans related to the contract between the Univ. of Wash. and the Corps of Engineers "For conducting a study to determine the effects of electricity on salmon and steelhead trout," presented to the Technical Fisheries Engineering Advisory Committee on Jan. 17, 1955. Univ. of Wash., School of Fisheries, 6 pp. (hectograph).

Verhoeven, L. A. and G. L. Hoard
1956. A study to determine the effects of electricity on salmon and steelhead trout. Progress Report on Fisheries Engineering Research Program, N. Pac. Div., Corps of Engineers, U. S. Army, Nov. 1956, pp. 139-153.

Verhoeven, L. A. and G. L. Hoard
Effects on young salmon of electric shocks composed of direct current superimposed. Univ. of Wash., School of Fisheries (manuscript)

Verhoeven, L. A., G. L. Hoard, and R. E. Nakatani
Injurious and mortal effects of electric currents on young salmon. Univ. of Wash., School of Fisheries, Tech. Report. No. 16.

Verhoeven, L. A., G. L. Hoard and R. E. Nakatani
1956. Effects of low-frequency-pulsated-square-wave direct current on young salmon. University of Wash., School of Fisheries, Technical Report No. 19, 1956.

Wunder, W.
1950. Die Seitenline, ein besonders wassersinnesorgan der fishe. Allgemeine Fischeri - Zeitschrift, Bd. 75, No. 4, pp. 97-99.

FISH-PASSAGE RESEARCH PROGRAM

1964 - The Accelerated Fish-Passage Research Program
U. S. Bureau of Commercial Fisheries - Seattle, Wash.
Five volumes, December 1964.

Contains the following list of papers as related to screening of fish by author:

Exploratory Research on Guiding Juvenile Salmon - Bates

Exploratory Experiments on the Deflection of Juvenile Salmon by Means of Water and Air Jets - Bates, VanDerwalker

Preliminary Tests With Louvers in the Troy Laboratory on the Grande Ronde River - Bates, Vinsonhaler, Sutherland

A Preliminary Study on the Maintenance of an Inclined Screen - Bates

Velocity-Matching Traveling Screens for Juvenile Migrant Collection - Bates, VanDerwalker

Activity Cycles of Juvenile Salmon - Blahm

A Report on a Preliminary Engineering Study of a Downstream Migrant Fish Screening Facility on the Snake River - Cornell, Howland, Hayes and Merryfield Consulting Engineers.

Fish Handling Methods Employed for Fingerling Mortality Studies in Kaplan Turbines - Duncan, Jensen, Long, Marquette

The Vertical Distribution of Coho Smolts in the Forebay of Merwin Dam in 1964 - Erho (Washington Department of Fisheries)

A Fish-Sanctuary Barge for Research in Turbines - Farr, Marquette

Effects of Water Temperature on Swimming Performance of Fingerling Sockeye Salmon (Summary) - Groves

Comparative Response of Blinded and Non-Blinded Fingerling Salmon to a Louver Barrier and to a Sharp Increase in Water Velocity - Gerold, Niggol

Comparison of Alternative Fish Hauling Costs, Middle Snake River Basin - Lane (Consulting Services Corp., Seattle, Wash.)

Guiding Salmon Fingerlings With Horizontal Louvers - Larsen

Day-Night Occurrence and Vertical Distribution of Juvenile Salmonids and Lamprey Ammocoetes in Turbine Intakes (Summary) - Long

Effect of Lighted Conditions at a Surface Bypass on the Vertical Distribution of Fingerling Salmonids in a Turbine Intake (Summary) - Long

Increasing the Percentage of Fingerlings Entering Intake Gatewells -- A Proposal - Long

Evaluation of Equipment for Recovering Fish Passed Through Kaplan Turbines - Marquette, Duncan, Jensen, Long

Timing, Composition, Quantity, and Vertical Distribution of Debris in the Snake River Near Weiser, Idaho--Spring 1964 - McConnell, Monan

A Field Test of Electrical Guiding and Louver Deflection Combined Into a Single Guiding System - Monan, Pugh

Horizontal and Vertical Distribution of Downstream Migrants, Snake River, Spring 1964 - Monan

Response of Juvenile Migrants to Flow Accelerations - Niggol

Effect of Water Velocity on the Fish Guiding Effectiveness of an Electric Field - Pugh, Monan, Smith

Horizontal and Vertical Distribution of Yearling Salmonids in the Upper End of Mayfield Reservoir - Pugh, Smith

Guiding Juvenile Salmonids With Long Lead Nets at the Upper End of Brownlee Reservoir - Pugh, Monan

Porous Plate Studies 9Summary) - Richey, Murphy (Univ. of Washington Hydraulics Laboratory)

A Funnel Net for Recovering Fish Below Turbines - Snyder, McNeely

Passage of Downstream Migrating Salmonids Through an Orifice in a Turbine Intake Gatewell at Bonneville Dam - Snyder

Exit Rate of Chinook and Coho Salmon Yearlings From a Turbine Intake Gatewell at Bonneville Dam - Snyder

Responses of Juvenile Chinook Salmon to Pressure Changes - Tarrant

Studies on the Responses of Fish to Low Frequency Vibrations - VanDerwalker

Exploratory Tests of Velocity Selection as a Means of Guiding Juvenile Fish - Vinsonhaler, Sutherland

Partial List
Of
U. S. Patents on Fish Screens

Patent No.		Date
630,769	Drum Screen	August 8, 1899
648,505	Electric Fishing Apparatus	May 1, 1900
886,797	Drum Screen	May 5, 1908
916,570	Bar Screen w/Mechanical Cleaner	March 30, 1909
951,635	Drum Screen	March 8, 1910
971,492	Drum Screen	September 27, 1910
988,033	Screen Panels - Self Cleaning	March 28, 1911
992,563	Slightly Inclined Vertical Belt Screen	May 16, 1911
993,074	Drum Screen	May 23, 1911
997,157	Drum Screen	July 4, 1911
1,002,208	Drum Screen	August 29, 1911
1,007,630	Drum Screen	October 31, 1911
1,011,119	Drum Screen	December 5, 1911
1,012,500	Drum Screen	December 19, 1911
1,038,087	Drum-Panel Combination	September 10, 1912
1,054,566	Drum Screen	February 25, 1913
1,063,316	Drum Screen	June 3, 1913
1,063,344	Inclined Belt Screen	June 3, 1913
1,064,335	Drum Screen	June 10, 1913
1,065,724	Drum Screen	June 24, 1913
1,076,483	Inclined Belt Screen	October 21, 1913
1,080,415	Drum Screen	December 2, 1913
1,080,488	Rotating Screen Panels	December 2, 1913
1,095,434	Drum Screen	May 5, 1914
1,095,697	Chain Fence Fish Guide	May 5, 1914
1,095,698	Chain Fence Fish Guide	May 5, 1914
1,098,489	Inclined Belt Screen	June 2, 1914
1,121,075	Rotating Screen Panels	December 15, 1914
1,132,041	Fish Trap Screen	March 16, 1915
1,143,147	Horizontal Traveling Screen	June 15, 1915
1,143,496	Bar Screen With Cleaner	June 15, 1915
1,147,301	Hexagon Drum Screen	July 20, 1915
1,166,628	Drum Screen	January 4, 1916
1,178,428	Plate-Fish & Barrier w/Special Baffles	April 4, 1916
1,180,564	Disk Screen	April 25, 1916
1,185,188	Drum Screen	May 30, 1916
1,195,988	Square Drum Screen	August 29, 1916
1,215,781	Double Plate Perforated Screen	February 13, 1917
1,215,817	Rotating Vertical Paddles	February 13, 1917
1,225,160	Fish Gate - Bar Screen	May 8, 1917
1,232,794	Bar Screen	July 10, 1917

Patent No.		Date
1,234,894	Drum Screen	July 31, 1917
1,241,708	Rotating Panel Screen	October 2, 1917
1,243,525	Vertical Belt Screen	October 16, 1917
1,252,617	Vertical Belt Screen	January 8, 1918
1,254,602	Bar Screen	January 22, 1918
1,255,741	Bar Screen	February 5, 1918
1,262,007	Bar Screen	April 9, 1918
1,263,691	Vertical Screen Panels w/Automatic Cleaning	April 23, 1918
1,265,251	Flap Gate Screen	May 7, 1918
1,265,508	Vertical Belt Screen	May 7, 1918
1,266,331	Bar, Drum Type Screen	May 14, 1918
1,269,058	Bar Screen	June 11, 1918
1,276,374	Vertical Drum Screen	August 20, 1918
1,302,839	Horizontal Bar Screen	May 6, 1919
1,346,881	Rotating Panel Screens	July 20, 1920
1,420,508	Drum Screen	June 20, 1922
1,451,394	Skimmer, Noise	April 10, 1923
1,468,320	Noise w/Bells	September 18, 1923
1,486,034	Panel - Drum Screen	March 4, 1924
1,493,405	Fish Screen Gate	May 6, 1924
1,551,967	Screen Panel	September 1, 1925
1,554,442	Drum Screen	September 22, 1925
1,596,310	Bar - Noise Screen	August 17, 1926
1,658,875	Bar Screen	February 14, 1928
1,663,398	Drum Screen	March 20, 1928
1,692,451	Inclined - Vertical Belt Screen	November 20, 1928
1,804,989	Screen Panels on Water Wheel	May 12, 1931
1,825,169	Inclined Screen (Slope Downstream) w/Flow Control	September 29, 1931
1,875,790	Belt Screen	September 6, 1932
2,010,601	Electric Fish Screen	August 6, 1935
2,056,445	Drum Screen	October 6, 1936
2,074,407	Square Drum Screen	March 23, 1937
2,095,504	Inclined Belt Screen w/Hinged Panels	October 12, 1937
2,162,325	Inclined Belt Screen	June 13, 1939
2,240,642	Drum Screen	May 6, 1941
2,309,472	Inclined Shaker Screen	January 26, 1943
2,324,296	Drum Screen	July 13, 1943
2,328,297	Drum Screen	August 31, 1943