United States Environmental Protection Agency
Effluent Guidelines Division
WH-552
Washington DC 20460
EPA 440/1-82/024
May 1982
Water and Waste Management

EPA

Development Document for Effluent Limitations Guidelines and Standards for the

Final

Iron and Steel Manufacturing Point Source Category

Volume V

Salt Bath Descaling Subcategory
Acid Pickling Subcategory

202-260-7151
Fax: 202-260-7185
jett.george@epa.gov

George M. Jett
Chemical Engineer
U.S. Environmental Protection Agency
Engineering and Analysis Division (4303)
1200 Pennsylvania Avenue, NW
Washington, D.C. 20460

DEVELOPMENT DOCUMENT

for

EFFLUENT LIMITATIONS GUIDELINES

NEW SOURCE PERFORMANCE STANDARDS

and

PRETREATMENT STANDARDS

for the

IRON AND STEEL MANUFACTURING POINT SOURCE CATEGORY

Anne M. Gorsuch
Administrator

Steven Schatzow
Director
Office of Water Regulations and Standards

Jeffery Denit, Acting Director
Effluent Guidelines Division

Ernst P. Hall, P.E.
Chief, Metals & Machinery Branch

Edward L. Dulaney, P.E.
Senior Project Officer

May, 1982

Effluent Guidelines Division
Office of Water Regulations and Standards
U.S. Environmental Protection Agency
Washington, D.C. 20460

SALT BATH DESCALING SUBCATEGORY

TABLE OF CONTENTS

SECTION	SUBJECT	PAGE
I	PREFACE	1
II	CONCLUSIONS	3
III	INTRODUCTION	15
	General Discussion	15
	Development of Regulations	15
	Description of Salt Bath Descaling Operations	16
IV	SUBCATEGORIZATION	29
	Introduction	29
	Factors Considered in Subdivision	29
V	WATER USE AND WASTEWATER CHARACTERIZATION	39
	Introduction	39
	Description of Salt Bath Descaling Operations and Wastewater Sources	39
VI	WASTEWATER POLLUTANTS	45
	Introduction	45
	Rationale for the Selection of Wastewater Pollutants	45
VII	CONTROL AND TREATMENT TECHNOLOGY	51
	Introduction	51
	Control and Treatment Technologies - Salt Bath Descaling	51
	Control and Treatment Technologies Considered for Toxic Pollutant Removal	53
	Plant Visit Data	55
	Effect of Make-up Water Quality	56
VIII	COST, ENERGY, AND NON-WATER QUALITY IMPACTS	83
	Introduction	83
	Actual Costs Incurred by the Operations Sampled for this Study	83
	Control and Treatment Technology	83
	Cost, Energy, and Non-Water Quality Impacts	84
	Estimated Costs for the Installation of Pollution Control Technologies	84

SALT BATH DESCALING SUBCATEGORY

TABLE OF CONTENTS (Continued)

SECTION	SUBJECT	PAGE
	Energy Impacts	86
	Non-Water Quality Impacts	88
	Summary of Non-Water Quality Impacts	90
IX	EFFLUENT QUALITY ATTAINABLE THROUGH THE APPLICATION OF THE BEST PRACTICABLE CONTROL TECHNOLOGY CURRENTLY AVAILABLE	111
	Introduction	111
	Identification of BPT	111
	BPT Effluent Limitations	113
	Justification of BPT Effluent Limitations	113
X	EFFLUENT QUALITY ATTAINABLE THROUGH THE APPLICATION OF THE BEST AVAILABLE TECHNOLOGY ECONOMICALLY ACHIEVABLE	121
	Introduction	121
	Identification of BAT	121
	Effluent Limitations for BAT Alternatives	123
	Selection of a BAT Alternative	123
	Justification of BAT Effluent Limitations	123
XI	BEST CONVENTIONAL POLLUTANT CONTROL TECHNOLOGY	127
	Introduction	127
	Development of BCT Limitations	127
XII	EFFLUENT QUALITY ATTAINABLE THROUGH THE APPLICATION OF NEW SOURCE PERFORMANCE STANDARDS	129
	Introduction	129
	Identification of NSPS	129
	Rationale for Selection of NSPS	130
	Selection of NSPS Alternative	131
	Demonstration of NSPS	131
XIII	PRETREATMENT STANDARDS FOR SALT BATH DESCALING OPERATIONS DISCHARGING TO PUBLICLY OWNED TREATMENT WORKS	137
	Introduction	137
	General Pretreatment Standards	137
	Identification of Pretreatment Alternatives	137
	Selection of Pretreatment Alternatives	137

SALT BATH DESCALING SUBCATEGORY

TABLES

NUMBER	TITLE	PAGE
II-1 and II-2	BPT Treatment Model Flow, Effluent Quality and Effluent Limitations	7
II-3 to II-8	Treatment Model Flows, Effluent Quality and Effluent Limitations	9
III-1 to III-6	General Summary Tables	18
III-7	Summary of Sampled Plants	24
III-8 and III-9	Data Base Tables	25
IV-1	Examples of Plants with Retrofitted Pollution Control Equipment	34
V-1 and V-2	Summaries of Analytical Data from Sampled Plants: Net Raw Concentrations	42
VI-1 and VI-2	Toxic Pollutants Known to be Present	47
VI-3 and VI-4	Selected Pollutants	49
VII-1	List of Control and Treatment Technology (C&TT) Components and Abbreviations	58
VII-2 to VII-5	Summaries of Analytical Data from Sampled Plants: Raw Wastewaters and Effluents	63
VII-6 and VII-7	Net Concentrations and Load Analysis	71
VIII-1 and VIII-2	Reported Effluent Treatment Cost Tables	92
VIII-3 and VIII-4	Model Control and Treatment Technologies	94
VIII-5 to VIII-10	BPT Treatment Model Costs	97
VIII-11 to VIII-16	BAT/PSES/PSNS/NSPS Treatment Model Cost Tables	103

SALT BATH DESCALING SUBCATEGORY

TABLES (Continued)

NUMBER	TITLE	PAGE
IX-1 and IX-2	Summary of Flow Data Tables	114
IX-3	BPT Effluent Limitations	116
IX-4 and IX-5	Justification of BPT Effluent Limitations Tables	117
X-1 and	BAT Effluent Limitations Tables	124
XII-1 and XII-2	New Source Performance Standards (NSPS)	132
XIII-1 and XIII-2	PSES and PSNS Effluent Limitations Tables	139

SALT BATH DESCALING SUBCATEGORY

FIGURES

NUMBER	TITLE	PAGE
III-1 and III-2	Process Flow Diagrams	27
IV-1 to IV-3	Discharge Flow Versus Size and Age Plots	35
VII-1 to VII-9	Treatment System Diagrams of Sampled Plants	73
VIII-1 and VIII-2	BPT/BCT/NSPS/PSES/PSNS Treatment Models Models	109
IX-1 and IX-2	BPT Treatment Models	119
XII-1 and XII-2	NSPS Treatment Models	134
XIII-1 and XIII-2	PSES and PSNS Treatment Models	141

ACID PICKLING SUBCATEGORY

TABLE OF CONTENTS

SECTION	SUBJECT	PAGE
I	PREFACE	143
II	CONCLUSIONS	145
III	INTRODUCTION	159
	General Discussion	159
	Data Base	160
	Description of Pickling Operations	161
	Type of Pickling	162
	Description of Wastewater Sources	163
	Acid Recovery and Acid Regeneration	165
	Combination Acid Pickling Operations	165
IV	SUBCATEGORIZATION	203
	Factors Considered in Subdivision and Segmentation	204
V	WATER USE AND WASTEWATER CHARACTERIZATION	227
	Introduction	227
	Acid Pickling	227
VI	SELECTION OF POLLUTANTS	243
	Conventional Pollutants	243
	Other Pollutants	244
	Toxic Pollutants	244
VII	CONTROL AND TREATMENT TECHNOLOGY	249
	Introduction	249
	Summary of Treatment Practices Currently Employed	249
	Treatment of Spent Pickle Liquor	249
	Treatment of Fume Scrubber Water	251
	Treatment of Pickle Rinsewaters	252
	Control and Treatment Technologies	252
	Summary of Monitoring Data	254
	Summary of Long-Term Analytical Data	255
	Plant Visits	255
	Effect of Make-up Water Quality	261
VIII	COST, ENERGY, AND NON-WATER QUALITY IMPACTS	345
	Introduction	345

ACID PICKLING SUBCATEGORY

TABLE OF CONTENTS (Continued)

SECTION	SUBJECT	PAGE
	Actual Costs Incurred for Plants Sampled for this Study	345
	Control and Treatment Technologies	345
	Cost, Energy, and Non-Water Quality Impacts	346
	General Introduction	346
	Estimated Costs for the Installation of Pollution Control Technologies	346
	Energy Impacts	348
	Non-Water Quality Impacts	349
	Summary of Impacts	350
IX	EFFLUENT QUALITY ATTAINABLE THROUGH THE APPLICATION OF THE BEST PRACTICABLE CONTROL TECHNOLOGY CURRENTLY AVAILABLE	427
	Introduction	427
	Identification of BPT	427
	Pollutants Limited at BPT	429
	BPT Flow Rates	430
	Wastewater Quality	431
	Justification of BPT	431
X	EFFLUENT QUALITY ATTAINABLE THROUGH THE APPLICATION OF THE BEST AVAILABLE TECHNOLOGY ECONOMICALLY ACHIEVABLE	467
	Introduction	467
	Identification of BAT	467
	Pollutants Limited at BAT	468
	Rationale for BAT	468
	Effluent Limitations for Alternative Treatment Systems	470
	Selection of a BAT Alternative	470
XI	BEST CONVENTIONAL POLLUTANT CONTROL TECHNOLOGY	477
	Introduction	477
	BCT Limitations	477
XII	EFFLUENT QUALITY ATTAINABLE THROUGH THE APPLICATION OF NEW SOURCE PERFORMANCE STANDARDS	483
	Introduction	483
	Identification of NSPS	483
	Rationale for NSPS	484
	Selection of NSPS Alternative	484

ACID PICKLING SUBCATEGORY

TABLE OF CONTENTS (Continued)

SECTION	SUBJECT	PAGE
	Demonstration of NSPS	484
XIII	PRETREATMENT STANDARDS FOR DISCHARGES TO PUBLICLY OWNED TREATMENT WORKS	497
	Introduction	497
	General Pretreatment Standards	497
	Identification of Pretreatment Alternatives	497
	Alternative Pretreatment Systems	498
	Selection of Pretreatment Alternatives	499

ACID PICKLING SUBCATEGORY

TABLES

NUMBER	TITLE	PAGE
II-1	BPT Treatment Model Flows and Effluent Quality	149
II-2	BPT Effluent Limitations	150
II-3	Treatment Model Flows and Effluent Quality	151
II-4	Effluent Limitations and Standards	155
III-1 to III-3	General Summary Tables	167
III-4 to III-6	Data Base Summary Tables	188
III-7	Summary of Sampled Operations	191
IV-1	Examples of Plants with Retrofitted Pollution Control Equipment	211
IV-2	Location of Subcategory Operations	212
IV-3	Average Process Flow Values	214
V-1 to V-3	Summaries of Analytical Data from Sampled Plants: Gross Raw Spent Pickle Liquor Concentration Tables	231
V-4 to V-6	Summaries of Analytical Data from Sampled Plants: Net Raw Rinse Concentration Tables	235
V-7	Summary of Analytical Data from Sampled Plants: Net Raw Fume Scrubber Concentration Table	240
V-8	Summary of Analytical Data from Sampled Plants: Net Raw Absorber Vent Scrubber Concentration Table	241
VI-1	Toxic Pollutants Known to be Present	246
VI-2	Selected Pollutants	247
VII-1	List of Control and Treatment Technology (C&TT) Components and Abbreviations	263

ACID PICKLING SUBCATEGORY

TABLES (Continued)

NUMBER	TITLE	PAGE
VII-2 to VII-4	Summaries of Analytical Data from Sampled Plants: Raw Spent Concentrates	268
VII-5 to VII-7	Summaries of Analytical Data from Sampled Plants: Raw Rinse Wastewaters and Effluents	276
VII-8	Summary of Analytical Data from Sampled Plants: Raw Fume Scrubber Wastewaters and Effluents	292
VII-9	Summary of Analytical Data from Sampled Plants: Raw Absorber Vent Scrubber Wastewaters and Effluents	295
VII-10 to VII-12	Net Concentration and Load Analysis Tables	297
VIII-1 to VIII-7	Effluent Treatment Cost Tables	351
VIII-8 to VIII-10	Model Control and Treatment Technology Summaries	358
VIII-11 to VIII-27	BPT/PSES-1 Treatment Model Cost Tables	363
VIII-28	BPT Cost Summary: In-Place and Required	380
VIII-29 to VIII-41	BAT/PSES Treatment Model Cost Tables	381
VIII-42	BAT Cost Summary	394
VIII-43 to VIII-54	NSPS/PSNS Treatment Model Cost Tables	395
VIII-55	PSES Cost Summary	419
VIII-56	BPT Energy Requirements Summary	420
VIII-57	BAT Energy Requirements Summary	421
VIII-58	NSPS/PSNS Model Plant Energy Requirements Summary	422

ACID PICKLING SUBCATEGORY

TABLES (Continued)

NUMBER	TITLE	PAGE
VIII-59	PSES Energy Requirements Summary	423
VIII-60	Solid Waste Generation Summary	424
IX-1	BPT Effluent Limitations Summary	433
IX-2 to IX-20	Development of Applied Flows Tables	434
IX-21 to IX-26	Justification of BPT Effluent Limitations	457
X-1	BAT Effluent Limitations	472
X-2	Development of Rinse Flow Reduction	476
XI-1	BCT Effluent Limitations	478
XII-1	New Source Performance Standards	485
XII-2 to XII-4	Justification of NSPS Effluent Standards Tables	490
XIII-1	Pretreatment Effluent Standards (Existing and New Sources)	500

ACID PICKLING SUBCATEGORY

FIGURES

NUMBER	TITLE	PAGE
III-1 to III-9	Process Flow Diagrams	193
IV-1 to IV-12	Applied Flow Versus Size and Age Plots	215
VII-1 to VII-44	Treatment System Diagrams of Sampled Plants	300
VIII-1	Treatment Models	425
IX-1	BPT Treatment Model	466
XI-1	BCT Treatment Model	481
XII-1	NSPS Treatment Model	496
XIII-1	PSES Treatment Model	504
XIII-2	PSNS Treatment Model	505

SALT BATH DESCALING SUBCATEGORY

SECTION I

PREFACE

The Agency has promulgated effluent limitations and standards for the steel industry pursuant to Section 301, 304, 306, 307 and 501 of the Clean Water Act. The regulation contains effluent limitations guidelines for best practicable control technology (BCT), and best available technology economically achievable (BAT) as well as pretreatment standards for new and existing sources (PSNS and PSES) and new source performance standards (NSPS).

This part of the Development Document highlights the technical aspects of the Agency's study of the Salt Bath Descaling Subcategory of the Iron and Steel Industry. Volume I of the Development Document addresses general issues pertaining to the industry, while other volumes contain specific subcategory reports.

SALT BATH DESCALING SUBCATEGORY

SECTION II

CONCLUSIONS

This report highlights the technical aspects of EPA's study of the Salt Bath Descaling Subcategory of the Iron and Steel Manufacturing Category.

Based upon this study, a review of previous studies, and comments received on the proposed regulation (46 FR 1858), the Agency has reached the following conclusions:

1. The Agency is retaining the previous subdivision of the Salt Bath Descaling (formerly Scale Removal) Subcategory into oxidizing (formerly Kolene®) and reducing (formerly hydride) scale removal operations. Based primarily on rinsewater flow rates, the Agency has further segmented oxidizing operations into continuous operations and batch operations by product; and, has further segmented reducing operations into batch and continuous operations. The subdivision of the Salt Bath Descaling Subcategory is as follows:

   <u>Oxidizing Operations</u>

   Batch
   - Sheet, Plate
   - Rod, Wire, Bar
   - Pipe, Tube

   Continuous

   <u>Reducing Operations</u>

   Batch
   Continuous

2. The BPT limitations promulgated by the Agency for Salt Bath Descaling operations are different than those originally promulgated in 1976 and proposed in January 1981. The promulgated limitations are based upon the same model treatment technologies (reduction of hexavalent chromium, oil skimming, polymer addition, and lime precipitation for oxidizing operations; cyanide destruction and precipitation of metals for reducing operations). The limitations reflect different model treatment system flow rates and effluent performance data for full scale treatment facilities for conventional and toxic pollutants.

3. EPA estimates that compliance with the BPT and BAT limitations and PSES will result in significant removals of toxic and other pollutants as shown below:

	Salt Bath Descaling			
	Direct Discharges (Tons/Year)		Indirect Discharges (Tons/Year)	
	Raw Waste	BPT/BAT/BCT	Raw Waste	PSES
Flow (MGD)	1.0	1.0	0.1	0.1
TSS	429	21.4	70.6	3.5
Toxic Metals	161	0.8	30.0	0.1
Toxic Organics	<0.05	<0.05	<0.05	<0.05
Other Pollutants	3.3	0.3	0.6	<0.05

4. The Agency's estimated industry-wide costs to achieve the BPT and BAT limitations and PSES are presented below. The Agency has determined that the effluent reduction benefits associated with compliance with the limitations and standards justify these costs.

Oxidizing Operations

(Millions of July 1978 Dollars)

	Investment Costs			Annual Costs		
	Total	In-Place	Required	Total	In-Place	Required
Batch						
Sheet, Plate	0.8	0.6	0.2	0.1	0.1	0.0
Rod, Wire, Bar	0.9	0.9	0.0	0.1	0.1	0.0
Pipe, Tube	0.8	0.8	0.0	0.1	0.1	0.0
Continuous	1.7	1.5	0.2	0.2	0.2	0.0
Total	4.2	3.8	0.4	0.5	0.5	0.0

Reducing Operations

(Millions of July 1978 Dollars)

	Investment Costs			Annual Costs		
	Total	In-Place	Required	Total	In-Place	Required
Batch	0.6	0.6	0.0	0.1	0.1	0.0
Continuous	0.2	0.2	0.0	0.0	0.0	0.0
Total	0.8	0.8	0.0	0.1	0.1	0.0

The Agency has also determined that the effluent reduction benefits associated with compliance with new source standards (NSPS, PSNS) justify those costs.

5. The Agency considered filtration of the BPT effluent for additional toxic metals removal and vapor compression distillation with distillate recycle to achieve zero discharge as treatment alternatives for BAT, NSPS, PSES, and PSNS. These alternatives were not selected as the basis for the limitations and standards because of the lack of suitable performance data for salt bath descaling operations (filtration) and because of high costs and energy consumption (vacuum compression distillation). The Agency has concluded that the BAT limitations and NSPS, PSES, and PSNS, should be the same as BPT limitations.

6. The Agency has promulgated BCT limitations for salt bath descaling operations that are the same as the respective BPT limitations for conventional pollutants.

7. Three Phase II remand issues which have a direct bearing on the salt bath descaling subcategory are addressed in detail in this report. A summary of these issues is presented below.

   a. The Agency examined the degree of water consumption that would result from compliance with the limitations and standards. Since the alternative treatment systems considered for salt bath descaling operations do not include recycle or cooling systems, no impact is expected on water consumption.

   b. The Agency evaluated the adequacy of previous cost estimates with regard to site-specific factors. An analysis was made comparing cost estimates, based upon model plant considerations, to actual cost data provided for salt bath descaling operations. However, since wastewaters for all lines for which data were provided are treated in large central treatment systems, the Agency found it impossible to segregate precisely those costs and therefore could not directly compare those costs on a subcategory basis. Nevertheless, the adequacy of the cost model to account for site-specific factors has been verified and is presented in Volume I. The comparison is made on a central treatment basis.

   c. Neither relaxed effluent limitations nor retrofit cost allowances are necessary for older salt bath descaling operations. Analysis indicates that the age of a salt bath descaling operation has no significant effect upon the ease or cost of retrofitting pollution control equipment.

8. Although several toxic pollutants were found to be present in raw wastewaters from salt bath descaling operations, the Agency believes it is not necessary to establish limitations and standards for each toxic pollutant. Adequate control of those toxic pollutants not specifically limited is attained by controlling the pollutants for which limitations and standards have been promulgated. By limiting the discharge of these

pollutants, effective control is provided for all toxic pollutants identified in raw wastewaters.

9. Tables II-1 and II-2 present the BPT treatment model flow and concentration bases and the resulting limitations for the oxidizing and reducing subdivisions respectively. Tables II-3 through II-6 present the treatment model flow and effluent quality data used to develop the BAT and BCT effluent limitations and NSPS, PSES, and PSNS oxidizing operations and tables II-7 and 8 present similar information for the reducing operations.

10. The costs noted in conclusion No. 3 above were not used by the Agency in the economic impact analysis completed for this regulation. After the economic impact analysis was completed, the Agency discovered an error in the costs developed for salt bath descaling operations. The correct costs are presented in this document. The incorrect costs used in the economic impact analysis are about 0.7 million 1978 dollars less than those shown above for existing sources. The Agency does not consider this difference or the small difference in new source costs to be significant in terms of whether the cost of achieving the effluent reduction benefits are justified. In addition, with respect to possible economic impacts, differences of this magnitude were accounted for by the sensitivity analyses included in the economic impact analysis.

TABLE II-1

BPT TREATMENT MODEL FLOW, MODEL EFFLUENT QUALITY AND EFFLUENT LIMITATIONS
SALT BATH DESCALING SUBCATEGORY
OXIDIZING

Subdivision/ Segment		Pollutant	Treatment Model Effluent Quality(1) Daily Maximum Concentration	Treatment Model Effluent Quality(1) 30-Day Average Concentration	BPT Effluent Limitations(2) Daily Maximum Limitations	BPT Effluent Limitations(2) 30-Day Average Limitations
Batch						
Sheet/Plate		Flow, gal/ton	700		NA	
		pH, Units	6.0 to 9.0		6.0 to 9.0	
		TSS	70	30	0.204	0.0876
	119	Chromium	1.0	0.4	0.00292	0.00117
	124	Nickel	0.9	0.3	0.00263	0.000876
Rod/Wire		Flow, gal/ton	420		NA	
		pH, Units	6.0 to 9.0		6.0 to 9.0	
		TSS	70	30	0.123	0.0526
	119	Chromium	1.0	0.4	0.00175	0.000701
	124	Nickel	0.9	0.3	0.00158	0.000526
Pipe and Tube		Flow, gal/ton	1,700		NA	
		pH, Units	6.0 to 9.0		6.0 to 9.0	
		TSS	70	30	0.496	0.213
	119	Chromium	1.0	0.4	0.00709	0.00284
	124	Nickel	0.9	0.3	0.00638	0.00213
Continuous						
		Flow, gal/ton	330		NA	
		pH, Units	6.0 to 9.0		6.0 to 9.0	
		TSS	70	30	0.0964	0.0413
	119	Chromium	1.0	0.4	0.00138	0.000551
	124	Nickel	0.9	0.3	0.00124	0.000413

(1) Concentrations are expressed in mg/l unless otherwise noted.
(2) kg/kkg of Product

NA: Not applicable

TABLE II-2

BPT TREATMENT MODEL FLOW, MODEL EFFLUENT QUALITY AND EFFLUENT LIMITATIONS
SALT BATH DESCALING SUBCATEGORY
REDUCING

Subdivision/ Segment		Pollutant	Treatment Model Effluent Quality(1) Daily Maximum Concentration	Treatment Model Effluent Quality(1) 30-Day Average Concentration	BPT Effluent Limitations(2) Daily Maximum Limitations	BPT Effluent Limitations(2) 30-Day Average Limitations
Batch		Flow, gal/ton	325		NA	
		pH, Units	6.0 to 9.0		6.0 to 9.0	
		TSS	70	30	0.0949	0.0407
	119	Chromium	1.0	0.4	0.00136	0.000542
	121	Cyanide	0.75	0.25	0.00102	0.000339
	124	Nickel	0.9	0.3	0.00122	0.000407
Continuous		Flow, gal/ton	1,820		NA	
		pH, Units	6.0 to 9.0		6.0 to 9.0	
		TSS	70	30	0.532	0.228
	119	Chromium	1.0	0.4	0.00759	0.00304
	121	Cyanide	0.75	0.25	0.00569	0.00190
	124	Nickel	0.9	0.3	0.00683	0.00228

(1) Concentrations are expressed in mg/l unless otherwise noted.
(2) kg/kkg of Product

NA: Not applicable

TABLE II-3

TREATMENT MODEL FLOW, MODEL EFFLUENT QUALITY AND EFFLUENT LIMITATIONS AND STANDARDS
SALT BATH DESCALING - OXIDIZING
BATCH - SHEET/PLATE

Pollutant	Treatment Model Effluent Quality(1)		BAT Effluent Limitations(2)		BCT Effluent Limitations(2)	
	Daily Maximum Concentration	30-Day Average Concentration	Daily Maximum Limitations	30-Day Average Limitations	Daily Maximum Limitations	30-Day Average Limitations
Flow, gal/ton	700		NA		NA	
pH, Units	6.0 to 9.0				6.0 to 9.0	
TSS	70	30			0.204	0.0876
119 Chromium	1.0	0.4	0.00292	0.00117		
124 Nickel	0.9	0.3	0.00263	0.000876		

Pollutant	NSPS(2)		PSES(2)		PSNS(2)	
	Daily Maximum Standards	30-Day Average Standards	Daily Maximum Standards	30-Day Average Standards	Daily Maximum Standards	30-Day Average Standards
Flow, gal/ton	NA		NA		NA	
pH, Units	6.0 to 9.0					
TSS	0.204	0.0876				
119 Chromium	0.00292	0.00117	0.00292	0.00117	0.00292	0.00117
124 Nickel	0.00263	0.000876	0.00263	0.000876	0.00263	0.000876

(1) Concentrations are expressed in mg/l unless otherwise noted.
(2) kg/kkg of Product

NA: Not applicable

TABLE II-4

TREATMENT MODEL FLOW, MODEL EFFLUENT QUALITY AND EFFLUENT LIMITATIONS AND STANDARDS
SALT BATH DESCALING - OXIDIZING
BATCH - ROD/WIRE/BAR

Pollutant	Treatment Model Effluent Quality(1)		BAT Effluent Limitations(2)		BCT Effluent Limitations(2)	
	Daily Maximum Concentration	30-Day Average Concentration	Daily Maximum Limitations	30-Day Average Limitations	Daily Maximum Limitations	30-Day Average Limitations
Flow, gal/ton	420		NA		NA	
pH, Units	6.0 to 9.0				6.0 to 9.0	
TSS	70	30			0.123	0.0526
119 Chromium	1.0	0.4	0.00175	0.000701		
124 Nickel	0.9	0.3	0.00158	0.000526		

	NSPS(2)		PSES(2)		PSNS(2)	
	Daily Maximum Standards	30-Day Average Standards	Daily Maximum Standards	30-Day Average Standards	Daily Maximum Standards	30-Day Average Standards
Flow, gal/ton	NA		NA		NA	
pH, Units	6.0 to 9.0					
TSS	0.123	0.0526				
119 Chromium	0.00175	0.000701	0.00175	0.000701	0.00175	0.000701
124 Nickel	0.00158	0.000526	0.00158	0.000526	0.00158	0.000526

(1) Concentrations are expressed in mg/l unless otherwise noted.
(2) kg/kkg of Product

NA: Not applicable

TABLE II-5

TREATMENT MODEL FLOW, MODEL EFFLUENT QUALITY AND EFFLUENT LIMITATIONS AND STANDARDS
SALT BATH DESCALING - OXIDIZING
BATCH - PIPE AND TUBE

Pollutant	Treatment Model Effluent Quality(1)		BAT Effluent Limitations(2)		BCT Effluent Limitations(2)	
	Daily Maximum Concentration	30-Day Average Concentration	Daily Maximum Limitations	30-Day Average Limitations	Daily Maximum Limitations	30-Day Average Limitations
Flow, gal/ton	1,700		NA		NA	
pH, Units	6.0 to 9.0				6.0 to 9.0	
TSS	70	30			0.496	0.213
119 Chromium	1.0	0.4	0.00709	0.00284		
124 Nickel	0.9	0.3	0.00638	0.00213		

	NSPS(2)		PSES(2)		PSNS(2)	
	Daily Maximum Standards	30-Day Average Standards	Daily Maximum Standards	30-Day Average Standards	Daily Maximum Standards	30-Day Average Standards
Flow, gal/ton	NA		NA		NA	
pH, Units	6.0 to 9.0					
TSS	0.496	0.213				
119 Chromium	0.00709	0.00284	0.00709	0.00284	0.00709	0.00284
124 Nickel	0.00638	0.00213	0.00638	0.00213	0.00638	0.00213

(1) Concentrations are expressed in mg/l unless otherwise noted.
(2) kg/kkg of Product

NA: Not applicable

TABLE II-6

TREATMENT MODEL FLOW, MODEL EFFLUENT QUALITY AND EFFLUENT LIMITATIONS AND STANDARDS
SALT BATH DESCALING - OXIDIZING
CONTINUOUS

Pollutant	Treatment Model Effluent Quality(1)		BAT Effluent Limitations(2)		BCT Effluent Limitations(2)	
	Daily Maximum Concentration	30-Day Average Concentration	Daily Maximum Limitations	30-Day Average Limitations	Daily Maximum Limitations	30-Day Average Limitations
Flow, gal/ton	330		NA		NA	
pH, Units	6.0 to 9.0				6.0 to 9.0	
TSS	70	30			0.0964	0.0413
119 Chromium	1.0	0.4	0.00138	0.000551		
124 Nickel	0.9	0.3	0.00124	0.000413		

Pollutant	NSPS(2)		PSES(2)		PSNS(2)	
	Daily Maximum Standards	30-Day Average Standards	Daily Maximum Standards	30-Day Average Standards	Daily Maximum Standards	30-Day Average Standards
Flow, gal/ton	NA		NA		NA	
pH, Units	6.0 to 9.0					
TSS	0.0964	0.0413				
119 Chromium	0.00138	0.000513	0.00138	0.000551	0.00138	0.000551
124 Nickel	0.00124	0.000413	0.00124	0.000413	0.00124	0.000413

(1) Concentrations are expressed in mg/l unless otherwise noted.
(2) kg/kkg of Product

NA: Not applicable

TABLE II-7

TREATMENT MODEL FLOW, MODEL EFFLUENT QUALITY AND EFFLUENT LIMITATIONS AND STANDARDS
SALT BATH DESCALING - REDUCING
BATCH

Pollutant	Treatment Model Effluent Quality(1)		BAT Effluent Limitations(2)		BCT Effluent Limitations(2)	
	Daily Maximum Concentration	30-Day Average Concentration	Daily Maximum Limitations	30-Day Average Limitations	Daily Maximum Limitations	30-Day Average Limitations
Flow, gal/ton	325		NA		NA	
pH, Units	6.0 to 9.0				6.0 to 9.0	
TSS	70	30			0.0949	0.0407
119 Chromium	1.0	0.4	0.00136	0.000542		
121 Cyanide	0.75	0.25	0.00102	0.000339		
124 Nickel	0.9	0.3	0.00122	0.000407		

	NSPS(2)		PSES(2)		PSNS(2)	
	Daily Maximum Standards	30-Day Average Standards	Daily Maximum Standards	30-Day Average Standards	Daily Maximum Standards	30-Day Average Standards
Flow, gal/ton	NA		NA		NA	
pH, Units	6.0 to 9.0					
TSS	0.0949	0.0407				
119 Chromium	0.00136	0.000542	0.00136	0.000542	0.00136	0.000542
121 Cyanide	0.00102	0.000339	0.00102	0.000339	0.00102	0.000339
124 Nickel	0.00122	0.000407	0.00122	0.000407	0.00122	0.000407

(1) Concentrations are expressed in mg/l unless otherwise noted.
(2) kg/kkg of Product

NA: Not applicable

TABLE II-8

TREATMENT MODEL FLOW, MODEL EFFLUENT QUALITY AND EFFLUENT LIMITATIONS AND STANDARDS
SALT BATH DESCALING - REDUCING
CONTINUOUS

	Pollutant	Treatment Model Effluent Quality(1)		BAT Effluent Limitations(2)		BCT Effluent Limitations(2)	
		Daily Maximum Concentration	30-Day Average Concentration	Daily Maximum Limitations	30-Day Average Limitations	Daily Maximum Limitations	30-Day Average Limitations
	Flow, gal/ton	1,820		NA		NA	
	pH, Units	6.0 to 9.0				6.0 to 9.0	
	TSS	70	30			0.532	0.228
119	Chromium	1.0	0.4	0.00759	0.00304		
121	Cyanide	0.75	0.25	0.00569	0.00190		
124	Nickel	0.9	0.3	0.00683	0.00228		

		NSPS(2)		PSES(2)		PSNS(2)	
		Daily Maximum Standards	30-Day Average Standards	Daily Maximum Standards	30-Day Average Standards	Daily Maximum Standards	30-Day Average Standards
	Flow, gal/ton	NA		NA		NA	
	pH, Units	6.0 to 9.0					
	TSS	0.532	0.228				
119	Chromium	0.00759	0.00304	0.00759	0.00304	0.00759	0.00304
121	Cyanide	0.00569	0.00190	0.00569	0.00190	0.00569	0.00190
124	Nickel	0.00683	0.00228	0.00683	0.00228	0.00683	0.00228

(1) Concentrations are expressed in mg/l unless otherwise noted.
(2) kg/kkg of Product

NA: Not applicable

SALT BATH DESCALING SUBCATEGORY

SECTION III

INTRODUCTION

General Discussion

Salt Bath Descaling is a surface operation in which specialty steel products are processed in molten salt solutions. Two types of solutions are used in the descaling removal process - Kolene® and hydride. As a result of the different characteristics of these solutions and their resulting wastewaters, the Agency has promulgated separate effluent limitations and standards for each process. The Agency has defined Kolene® operations as salt bath descaling-oxidizing operations and hydride operations as salt bath descaling-reducing operations.

Pollutants are generated by two sources in the salt bath descaling process; the bath containing the oxidizing or reducing solutions and the rinse or quench steps following the descaling removal bath. Both sources contain the same pollutants but at different levels. Since spent descaling solutions from most plants are hauled off-site for disposal, the limitations and standards are based primarily upon flow and effluent quality data for the rinse or quench steps. The descaling baths are generally small in volume and are used for long periods of time before being discarded.

As with many other steel finishing operations, there are two modes of descaling operations - batch and continuous. These are detailed in Figures III-1 and III-2. The pickling step shown after scale removal depicts the typical processing train in a specialty steel mill combining salt bath descaling and pickling operations. However, the limitations and standards presented in this document apply only to descaling operations. Acid pickling operations are addressed separately.

Development of Regulations

The regulation governing the salt bath descaling processes was previously promulgated on March 29, 1976, and contained limitations for a number of pollutants (see Section VI). For this study, the Agency conducted additional sampling and gathered detailed information from the steel industry to provide an expanded data base. On the basis of these new data, the Agency concluded that revisions of the March 29, 1976 BPT limitations are appropriate.

Responses to the basic data collection portfolios (DCPs) sent to approximately 85% of the active scale removal operations in the country are the primary source of new data. DCPs requested information on process and discharge flow rates, installed treatment

systems, mill capacities and modes of operation. Information for twenty-four oxidizing operations and eight reducing operations was provided in the responses to the DCPs. The data supplied for these lines have been tabulated and are summarized in Tables III-1 through III-6.

After the DCP responses were reviewed, the Agency sent detailed questionnaires (D-DCPs) to the owners of selected lines, primarily to gather information on long term effluent quality and detailed cost information for installed treatment systems. The Agency solicited information for seven scale removal lines through D-DCPs. The responses to questionnaires were useful in providing data needed to verify cost estimates, to consider retrofit costs, and in providing additional effluent data.

The March 29, 1976 regulation was primarily based upon data obtained through field sampling at four scale removal operations. During this study, the Agency conducted sampling at six lines to increase the data base for the previously limited pollutants and to monitor for toxic pollutants. A complete list of all scale removal operations sampled and a brief description of each is provided in Table III-7. As shown, the Agency resampled two lines. Data collected at each sampling visit are presented in this report; however, only the data gathered at the later visit have been used for developing effluent limitations and standards. The updated data base for this subcategory is shown in Tables III-8 and III-9.

Description of Salt Bath Descaling Operations

A. Oxidizing Operations

The oxidixing process uses highly oxidizing salt baths maintained at temperatures of 700-900°F. These salts react far more aggressively with scale than with the base metal and, as a result, produce a smoother surface than acid pickling.

The oxidizing process is usually carried out in the following manner. The steel product is placed in the oxidizing bath after annealing. After the product has been processed a sufficient time, for necessary chemical and thermal action, it is quenched in a "cold" water tank. The combination of the chemical action and the sudden thermal shock and steam formation causes the scale on the surface to crack, so that subsequent pickling operations can be more effective. Another important function of the quenching operation is to cool the product. Without adequate cooling, the immersion of the product into an aggressive acid solution such as nitric and nitric/hydrofluoric will cause overheating of the acid bath and an undesirable attack on the base alloys.

Oxidizing baths in the alloy and stainless steel industry are not separate processes but are operated as an integral part of the

pickling process. More detail on oxidizing operations is shown in Figures III-1 and III-2.

B. Reducing Operations

Sodium hydride descaling depends upon the strong reducing properties of sodium hydride (1.5 to 2 percent by weight in a fused caustic soda bath) at 700°F. Most scale forming oxides are reduced to the base metal, and oxides of metals that form acid radicals are partly reduced. The hydride is formed in place by the reaction of hydrogen and sodium in open bottom chambers partially immersed in the bath. Most commercial operations use ammonia disassociation as a source of hydrogen. Reducing operations, like oxidizing operations, are operated as integral parts of the pickling process. More detail on reducing operations is illustrated in Figures III-1 and III-2.

TABLE III-1

GENERAL DATA SUMMARY
SALT BATH DESCALING SUBCATEGORY
OXIDIZING - BATCH - SHEET/PLATE

Plant Code	Type of Product	Plant Age	Capacity (Tons/Day)	Applied Flow (Gallons/Ton)	Discharge Flow (Gallons/Ton)	Control and Treatment Technologies(1)	Treatment Plant Age	Discharge To POTW
020B-01	Sheet, Plate	1947	99	NA	91	CR, NL, FLP, VF, CL, CNT	1974	No
256L	Sheet	1962	*	*	*	CNT, (50), VF, FLP, CR, NL, NC, PSP, SSP	1977	No
424	Plate	1960	NA	494	494	VF, CR, FLP, NL, NW, NA, CL, SL, T	1960	No
430C	Sheet, Plate	1962	54	1467	1467	BOl, CLA, FLL, FLP,NL, SCR, CL, SL, SS, CNT(100)	-	No
776H	Sheet	1960	13	391	391	CNT(67), NW, CL, T	NA	No
+856E	Sheet, Plate	1956	78	1846	1846	Not Available	NA	No

(1) For a definition of the codes used, refer to Table VII-1.

NA: Not Available
- : Not Applicable
: Brackets represent data gathered during a sampling visit to this mill.
* : Confidential data
+ : Plant/line has been shutdown.

TABLE III-2

GENERAL DATA SUMMARY
SALT BATH DESCALING SUBCATEGORY
OXIDIZING - BATCH - ROD/WIRE/BAR

Plant Code	Type of Product	Plant Age	Capacity (Tons/Day)	Applied Flow (Gallons/Ton)	Discharge Flow (Gallons/Ton)	Control and Treatment Technologies (1)	Treatment Plant Age	Discharge To POTW
060I	Rod, Wire	1970	190	380	380	CR, NC, NA, CNT(12)	1972	No
176-04	Rod, Wire	1968	203	461	461	CNT,(17), CL, PSP, NA, CO, CLA, EB, FLP, NC, NW, CL, SL, SSP, T, SS, CY	1965	No
440A-01	Bar, Rod	1958	63	342	342	NW, SL	NA	Yes
776G	Bar, Rod, Wire	1960	5	1283	1283	CNT(55), FLP, NC, FD	1976	No

(1) For a definition of the codes used, refer to Table VII-1.

[ ]: Brackets represent data gathered during a sampling visit to this mill.
NA: Not Available

TABLE III-3

GENERAL DATA SUMMARY
SALT BATH DESCALING SUBCATEGORY
OXIDIZING - BATCH - PIPE/TUBE

Plant Code	Type of Product	Plant Age	Capacity (Tons/Day)	Applied Flow (Gallons/Ton)	Discharge Flow (Gallons/Ton)	Control and Treatment Technologies (1)	Treatment Plant Age	Discharge To POTW
088A-01	Tube	1962	69	1774	1774	CR, E, NL, FLP, CL, T, VF, SS, CNT(10)	1969	No
088A-02	Tube	1946	36	1553	1553	CR, E, NL, FLP, CL, T, VF, SS, CNT(4)	1969	No
248D	Pipe, Tube	NA	1 Lo	1026	1026	CNT(1), NA, T	1975	No

(1) For a definition of the codes used, refer to Table VII-1.

NA: Not Available

TABLE III-4

GENERAL DATA SUMMARY
SALT BATH DESCALING SUBCATEGORY
OXIDIZING - CONTINUOUS

Plant Code	Type of Product	Plant Age	Capacity (Tons/Day)	Applied Flow (Gallons/Ton)	Discharge Flow (Gallons/Ton)	Control and Treatment Technologies (1)	Treatment Plant Age	Discharge To POTW
020B-02	Sheet	1957	210	NA	NA	CR, NL, FLP, VF, CL, CNT(4.6)	1974	No
060D	Strip	1961	300 Hi	NA	NA	VF, FLP, NL, CL, CR	1961	No
248B-02	Sheet	1975	NA	NA	NA	SCR, NL, FLP, CL, T, FP, CNT(18)	1978	No
2560	Strip	1972	*	*	*	VF, FLP, CL, NL, CNT(1)	1978	No
284A	Strip	1957	138	104	104	CNT(6), CR, NL, FLP, CL, CY	1971	No
432L	Strip	1959	34	NA	NA	None	NA	NA
528-02	Sheet	1955	153	235	235	CNT, SS, NL	NA	Yes
528-03	Sheet	1956	54	667	667	CNT, SS, NL	N.A	Yes
528-04	Sheet	1956	90	400	400	CNT, SS, NL	NA	Yes
528-05	Sheet	1975	210	617	617	CNT, SS, NL	NA	Yes
684D	Strip	NA	69	167	167	Not Available	NA	NA

(1) For a definition of the codes used, refer to Table VII-1.

NA: Not Available
: Brackets represent flow data gathered on the sampling visit for this mill.
* : Confidential data

TABLE III-5

GENERAL DATA SUMMARY
SALT BATH DESCALING SUBCATEGORY
REDUCING - BATCH

Plant Code	Type of Product	Plant Age	Capacity (Tons/Day)	Applied Flow (Gallons/Ton)	Discharge Flow (Gallons/Ton)	Control and Treatment Technologies (1)	Treatment Plant Age	Discharge To POTW
176-01	Bar, Rod, Wire	1941	173	611	611	CNT(17), CR, PSP, NA, CO, CLA, EB, FLP, NC, NW, CL, SL, SSP, T, SS, CY	1965	No
176-02	Rod, Wire	1950	262	330	330	CNT, (9), CR, PSP, NA, CO, CLA, EB, FLP, NC, NW, CL, SL, SSP, T, SS, CY	1965	No
256K	Wire	1956	165	87	87	CNT(1), FLP, NL, CL	1971	No
256N	Bar, Billet	1955	27	1.8	1.8	CLA, NA, SL, CNT(66)	1973	Yes
684P	Wire	1945	17	102	33	Not Available	NA	No
684V	Sheet, Plate	NA	NA	NA	NA	Not Available	NA	NA

(1) For a definition of the codes used, refer to Table VII-1.

NA: Not Available
: Brackets represent flow data gathered on the sampling visit for this mill.

TABLE III-6

GENERAL DATA SUMMARY
SALT BATH DESCALING SUBCATEGORY
REDUCING - CONTINUOUS

Plant Code	Type of Product	Plant Age	Capacity (Tons/Day)	Applied Flow (Gallons/Ton)	Discharge Flow (Gallons/Ton)	Control and Treatment Technologies(1)	Treatment Plant Age	Discharge To POTW
176-03	Strip	1963	20	1818	1818	CNT(4), CR, PSP, NA, CO, CLA, EB, FLP, NC, NW, CL, SL, SSP, T, SS, CY	1965	No
248B-01	Sheet	1950	NA	NA	NA	SCR, NL, FLP, CL, T, FP, CNT(18)	1978	No

(1) For a definition of the codes used, refer to Table VII-1.

NA: Not Available

TABLE III-7

SUMMARY OF THE MILLS
SAMPLED DURING THIS STUDY
SALT BATH DESCALING SUBCATEGORY

Plant Code	Reference No.	Type of Descaling Operation	Type of Process	Product Processed	Mill Age
C	424	Oxidizing	Batch	Plate	1960
L	440A-01	Oxidizing	Batch	Bar, Rod	1958
Q	684D	Oxidizing	Continuous	Strip	NA
L	440A	Reducing	Batch	NA	NA
131	424	Oxidizing	Batch	Plate	1960
132	176-01	Reducing	Batch	Bar, Rod, Wire	1941
132	176-04	Oxidizing	Batch	Rod, Wire	1968
138	440A-01	Oxidizing	Batch	Bar, Rod	1958
137	432K	Oxidizing	Continuous	Sheet	1958
139	256N-01	Reducing	Batch	Bar, Billet	1955

NA: Information Not Available

TABLE III-8

SALT BATH DESCALING DATA BASE
OXIDIZING OPERATIONS

	No. of Operations	% of Total No. of Operations	Daily Capacity of Operations	% of Total Daily Operations
Operations Sampled for Original Study	3	11	132	5
Operations Sampled for Toxic Pollutant Study	4 incl. 2 above	18 incl. 11 above	515 incl. 132 above	21 incl. 5 above
Total Operations Sampled	5	18	515	21
Operations Responding to Detailed DCP's	6	21	571	23
Operations Sampled and/or Solicited via Detailed DCP's	11	39	1086	45
Operations Responding to DCP's	24	86	2069	85
Estimated No. of Operations	28	100	2434	100

TABLE III-9

SALT BATH DESCALING DATA BASE
REDUCING OPERATIONS

	No. of Operations	% of Total No. of Operations	Daily Capacity of Operations	% of Total Daily Operations
Operations Sampled for Original Study	1	11	21	3
Operations Sampled for Toxic Pollutant Study	2	22	200	26
Total Operations Sampled	3	33	221	28
Operations Responding to Detailed DCP's	1	11	27	3
Operations Sampled and/or Solicited via Detailed DCP's	4	44	248	32
Operations Responding to DCP's	8	89	664	85
Estimated No. of Operations	9	100	781	100

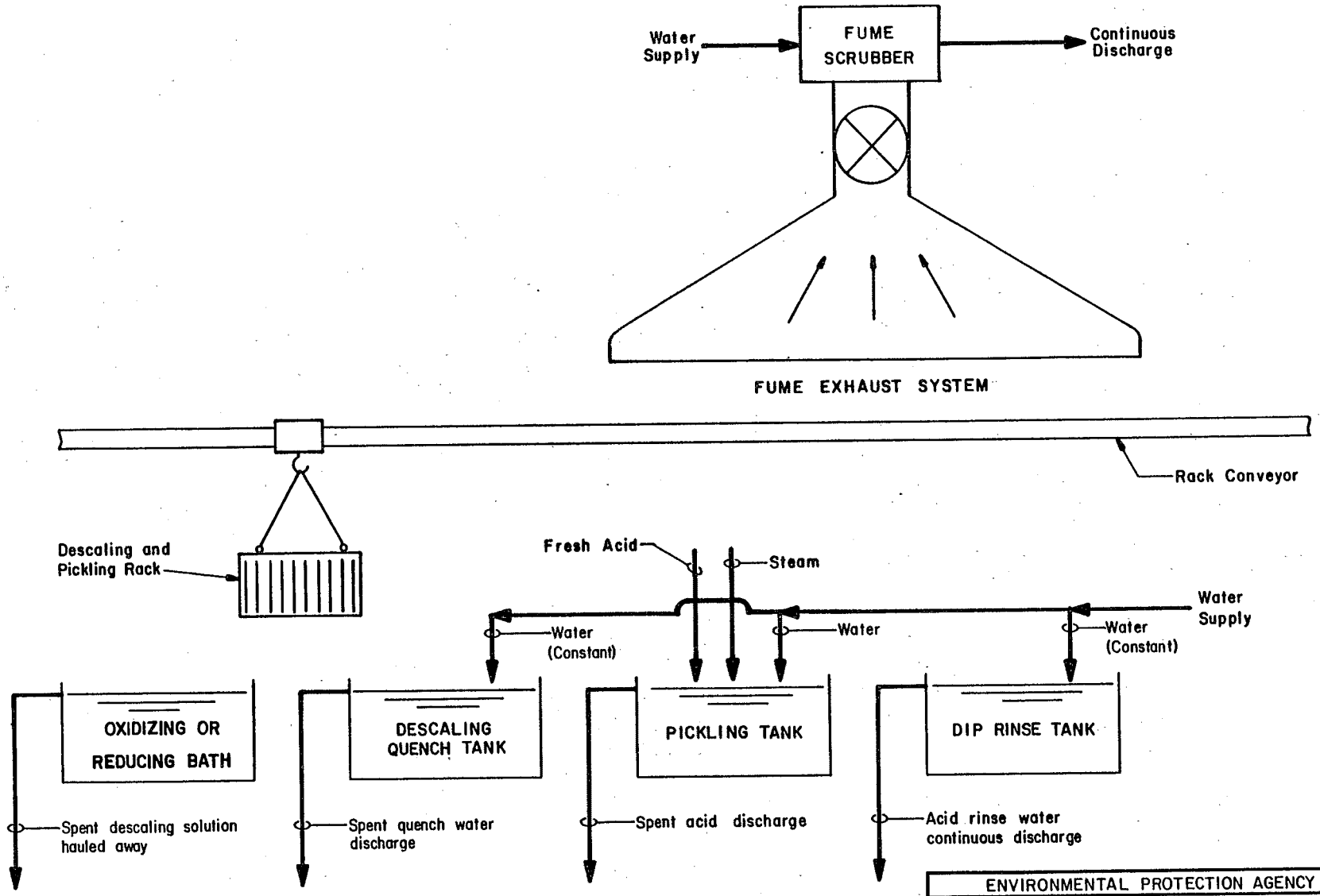

ENVIRONMENTAL PROTECTION AGENCY

STEEL INDUSTRY STUDY
SALT BATH DESCALING
BATCH TYPE OPERATION

Dwn. 3/2/79

FIGURE III-1

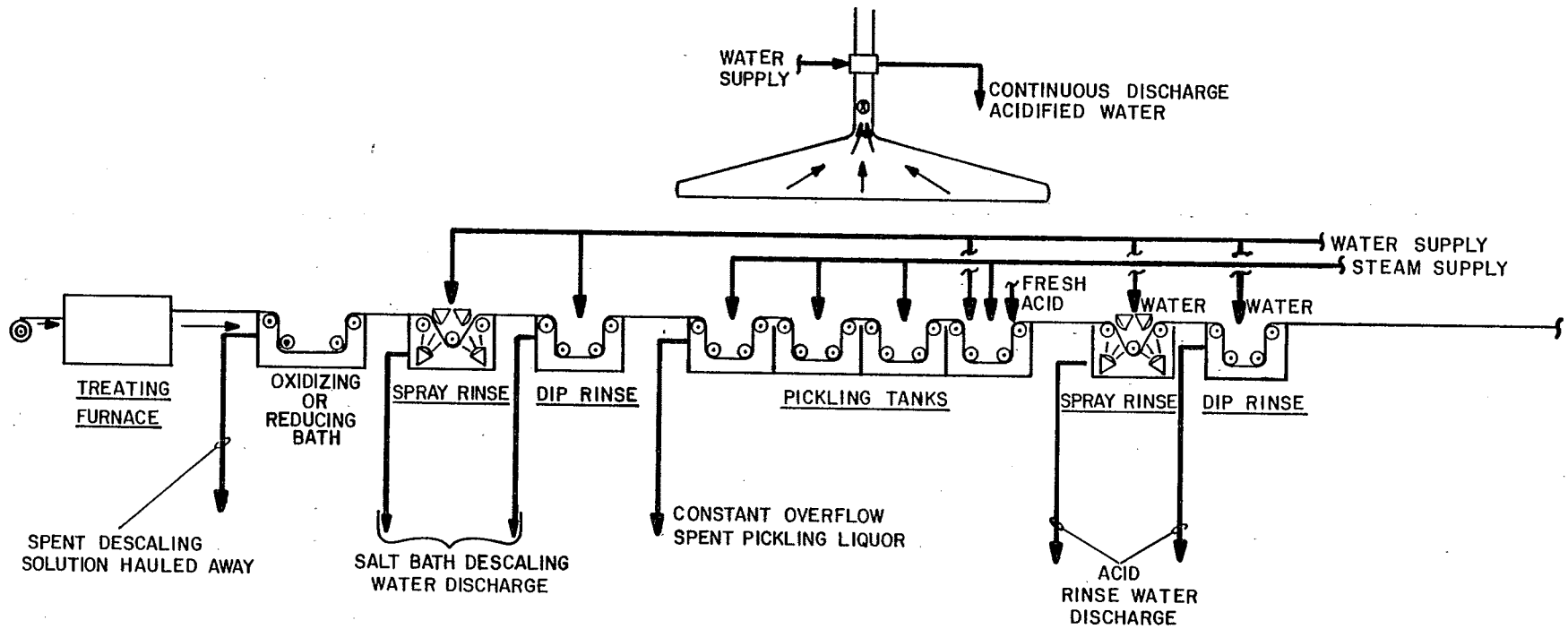

ENVIRONMENTAL PROTECTION AGENCY

STEEL INDUSTRY STUDY

SALT BATH DESCALING

CONTINUOUS TYPE OPERATION

Dwn. 3/2/79

FIGURE III-2

SALT BATH DESCALING SUBCATEGORY

SECTION IV

SUBCATEGORIZATION

Introduction

Since the two types of salt bath descaling operations are significantly different, the salt bath descaling subcategory was separated into two subdivisions. Different flow rates and wastewater characteristics were noted for each of the two types of operations and for some of the product types within each subdivision.

The Agency examined other factors but concluded that further subdivision is not appropriate. Line age and size were analyzed to determine if these had any effects on wastewater quality or quantity or the costs or feasibility of retrofitting pollution control facilities. However, no significant impacts were found. The Agency also considered whether product type and raw materials have a significant effect, but found that further subdivision of the salt bath descaling subcategory on those bases is not appropriate. Each of these factors is discussed in greater detail below.

Factors Considered in Subdivision

Manufacturing Process and Equipment

The analysis completed for this study shows that there are significant differences in oxidizing and reducing descaling operations. Effluent flow rates, wastewater characteristics and other factors resulting from the process make subdivision of this subcategory, on the basis of the type of descaling operation, appropriate.

Final Product

The products that are processed in either oxidizing or reducing operations include sheet, strip, rod, wire, tubes and bars. However, aside from applied and discharge flow rates, final products fo not affect subcategorization to a significant degree. This finding has also been made for other steel finishing subcategories. As shown in Table III-7, numerous products are descaled by operations sampled for this study. No significant variations were found in wastewater quality that could be attributed to the type of product. Also, similar effluent quality can be attained regardless of the product descaled. However, upon reevaluation of data in response to comments received on the proposed regulation, the Agency did find significant differences in applied and discharge flows, by product type and by operating mode. The oxidizing and reducing subdivisions were further segmented accordingly.

Raw Materials

Only specialty steels are processed in salt bath descaling operations. While elements of specialty steels (i.e., percentage of Cr or Ni) may vary, the Agency did not find any significant difference in flow or wastewater characteristics resulting from the processing of the various types of specialty steel. Oxidizing operations are better suited for certain types of steels (i.e.,chromium-nickel, high temperature and nickel product grades) and reducing operations for other types, such as tool steel and chromium stainless and alloy grades. These differences are accounted for by the general subdivision into oxidizing and reducing operations.

Wastewater Characteristics

Wastewater characteristics and flow rates vary significantly between the descaling processes, which make the subdivision into oxidizing and reducing operations appropriate. Different pollutants are found in the raw wastewaters from these operations. Based upon these differences, the Agency developed different alternative treatment systems. The rationale for developing the alternative treatment systems is explained in Sections VII through XIII.

Wastewater Treatability

Different treatment configurations are required for oxidizing and reducing operations. For example, reducing operations may generate quantities of cyanide that must be treated, while the wastewaters from oxidizing operations do not contain cyanide to any significant degree. Likewise, wastewaters from oxidizing operations contain large amounts of hexavalent chromium, while this pollutant is not normally found at significant levels in wastewaters from reducing operations.

Within each operation, however, no significant difference in wastewater treatability was found. Pollutants in the wastewaters from the oxidizing operations can be treated to appropriate levels with model treatment systems. Wastewaters from batch and continuous operations contain similar levels of pollutants. The same type of treatment is equally effective for either mode. These same relationships hold true for reducing operations.

For these reasons, the Agency believes that subdivision, by the type of descaling removal bath, sufficiently accounts for variations in wastewater treatability.

Size and Age

The Agency considered the impact of size and age on the subdivision of descaling operations. Various relationships were analyzed dealing with possible correlations between the effect of age and size on wastewater generation, the ability and cost to install wastewater treatment facilities, and the ability to achieve the desired flow rates and effluent limitations and standards. However, the analysis

did not reveal any significant relationships which might affect subdivision. Hence, the limitations and standards apply to lines of all sizes and ages.

The Agency examined whether the size of descaling operations might make further subdivision appropriate. Descaling operations vary greatly in physical size, layout and product size. However, no relationship was revealed between these and factors such as process water usage, discharge rates, effluent quality or other pertinent factors. Shown on Figures IV-1 through IV-3 are plots which analyze the possible relationship between discharge flow and size. In addition, size does not affect wastewater characteristics. Since all lines are operated in a similar manner, the wastewater characteristics remain relatively constant regardless of size. The sampling data do not show any differences in wastewater characteristics between lines of different size.

It was also found that the size of the line does not affect the ability to install adequate treatment systems. Large and small lines have treatment systems that are approximately the same age and which have similar treatment components. Also, the cost data developed for this study show treatment can be installed for approximately the same cost on a $/ton basis at both large and small lines.

The relationship between flow and age was analyzed in the same way as the flow and size relationship. The plots of flow versus age for the oxidizing and reducing operations are shown in Figures IV-1 through IV-3, along with the plots of flow versus size. No relationships between flow and age are evident. Therefore, the Agency believes that age has no significant impact on discharge flow.

Another factor analyzed was the effect of age on the ability, ease and cost of installing or retrofitting pollution control equipment. Table IV-1 lists those companies that have retrofitted pollution control equipment at older lines. The numerous examples effectively illustrate the ability to retrofit treatment systems to older lines.

The ease and cost of retrofitting pollution controls was evaluated from the responses to the D-DCPs. Cost data were provided for three older lines that retrofitted pollution control equipment. No retrofit costs were reported for two lines and a nine percent retrofit cost was reported for the third. However, the detailed information to account for this additional cost, which was requested by the Agency, was not provided. As a result, the Agency was not able to assess the significance of this retrofit cost, or whether it is, in fact, wholly attributable to retrofitting pollution control equipment. However, the Agency does not consider a nine percent retrofit cost substantial. Hence, the Agency has not further subdivided the salt bath descaling subcategory on the basis of costs for retrofitting pollution control equipment at older lines. Descaling wastewaters are generally combined with other specialty steel finishing wastewaters and treated in central treatment facilities.

The Agency also analyzed the sampling data collected during this study, to determine if age has a significant effect on wastewater characteristics or effluent quality. The dates of construction of the lines sampled ranged from 1941 to 1968. No significant differences were noted between the effluent quality attained at the older lines versus the newer lines. Similar levels of removal were being achieved at lines of all ages, where adequate treatment was installed.

Based upon the above, the Agency finds that both old and newer production facilities generate similar raw wastewater pollutant loadings; that pollution control facilities can be and have been retrofitted to both old and newer production facilities without substantial retrofit costs; that these pollution control facilities can and are achieving the same effluent quality; and that further subcategorization or further segmentation within this subcategory, on the basis of age or size, is not appropriate.

Geographic Location

Examination of raw waste characteristics, process water application rates, discharge rates, effluent quality and other pertinent factors, related to the discharge, reveals no general relationship or pattern. Salt bath descaling removal lines are located in only five states, with about 77% located in Pennsylvania and Ohio.

A few lines are located in what could be considered "semi-arid" or "arid" regions. Because the model treatment systems do not include recycle or cooling systems, consumption of water due to wastewater treatment is negligible, and further subcategorization on this basis is not warranted.

Process Water Usage

Water is used in descaling operations to rinse and cool the products after they have been immersed in oxidizing and reducing baths. Because of process requirements and the nature of wastewaters discharged from descaling removal lines, no recycle systems have been installed at any of the lines surveyed. All process waters are used on a once-through basis. As a result, the water application and discharge flow rates are the same.

The observed and reported flow rates from salt bath descaling operations are variable. The Agency did find significant differences in process water usage by product type and operating mode and has further segmented oxidizing and reducing operations accordingly. The Agency believes that segmentation by product type and operating mode sufficiently accounts for flow variations in this subcategory.

Subcategorization

Based upon the above factors the Agency has further subdived the Salt Bath Descaling subcategory as follows:

Oxidizing Operations

Batch
- Sheet, Plate
- Rod, Wire, Bar
- Pipe, Tube

Continuous

Reducing Operations

Batch
Continuous

TABLE IV-1

EXAMPLES OF SALT BATH DESCALING OPERATIONS THAT HAVE RETROFITTED TREATMENT

	Plant Code	Plant Age	Treatment Plant Age
OXIDIZING			
	060I	1970	1972
	088A	1962	1969
	256L	1962	1977
	776G	1960	1976
	020B	1957	1974
	248B	1975	1978
	256O	1972	1978
	248A	1957	1971
REDUCING			
	176	1941	1965
	248B	1950	1978
	256K	1956	1971
	256N	1955	1973

FIGURE IV–1
SALT BATH DESCALING SUBCATEGORY
OXIDIZING–BATCH

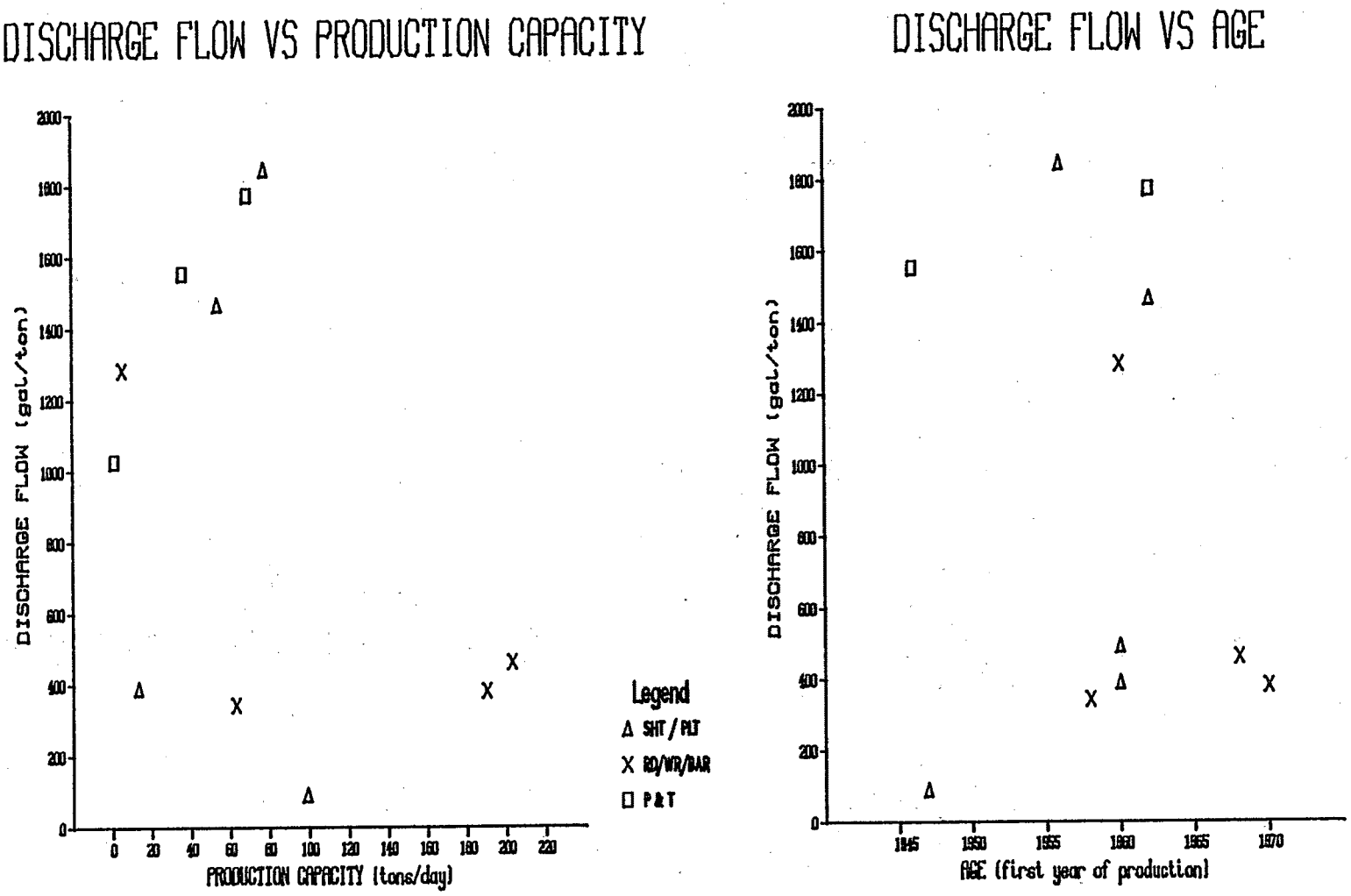

FIGURE IV–2
SALT BATH DESCALING SUBCATEGORY
OXIDIZING–CONTINUOUS

DISCHARGE FLOW VS PRODUCTION CAPACITY

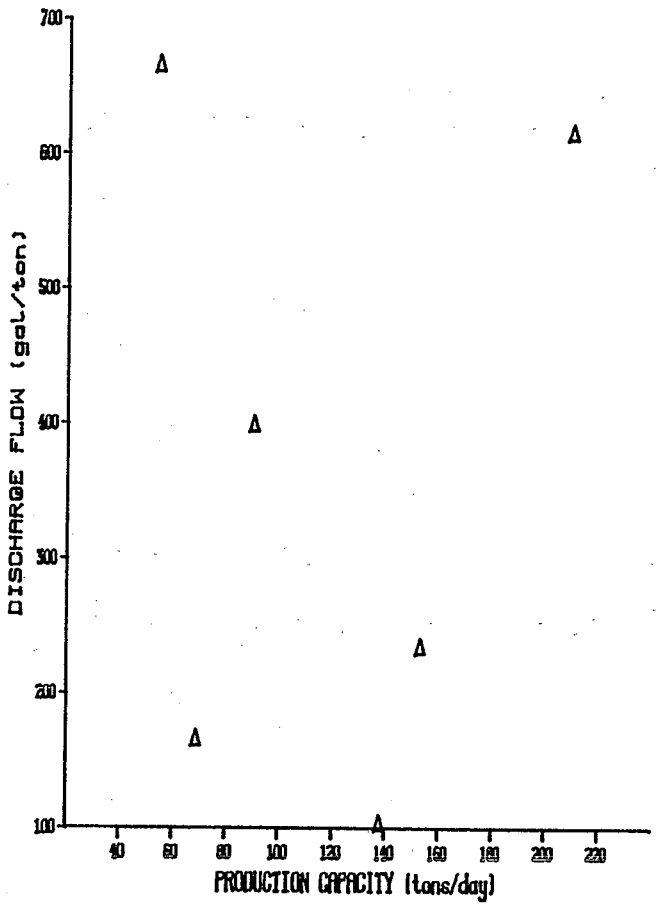

DISCHARGE FLOW VS AGE

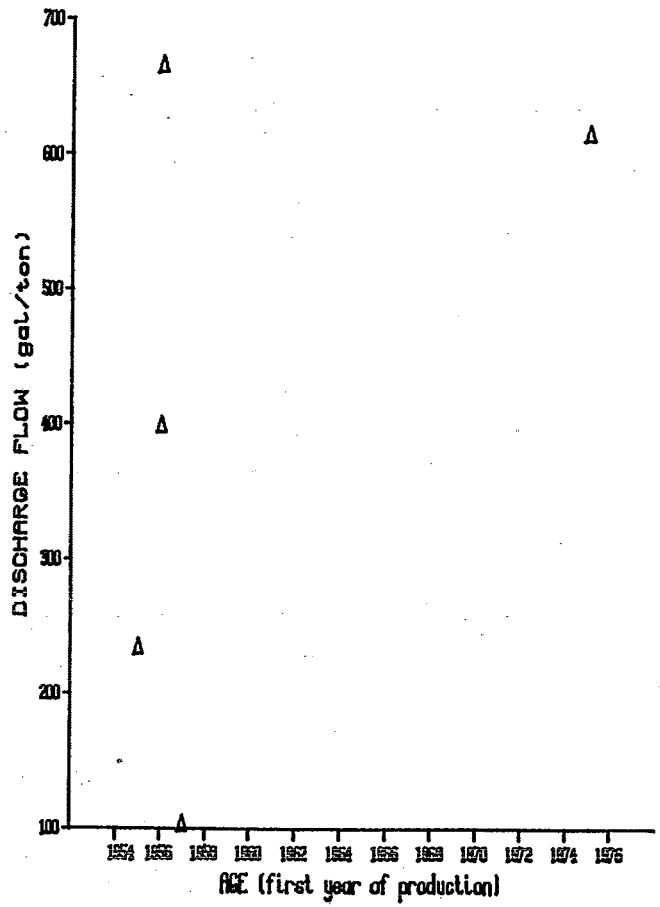

FIGURE IV–3
SALT BATH DESCALING
REDUCING

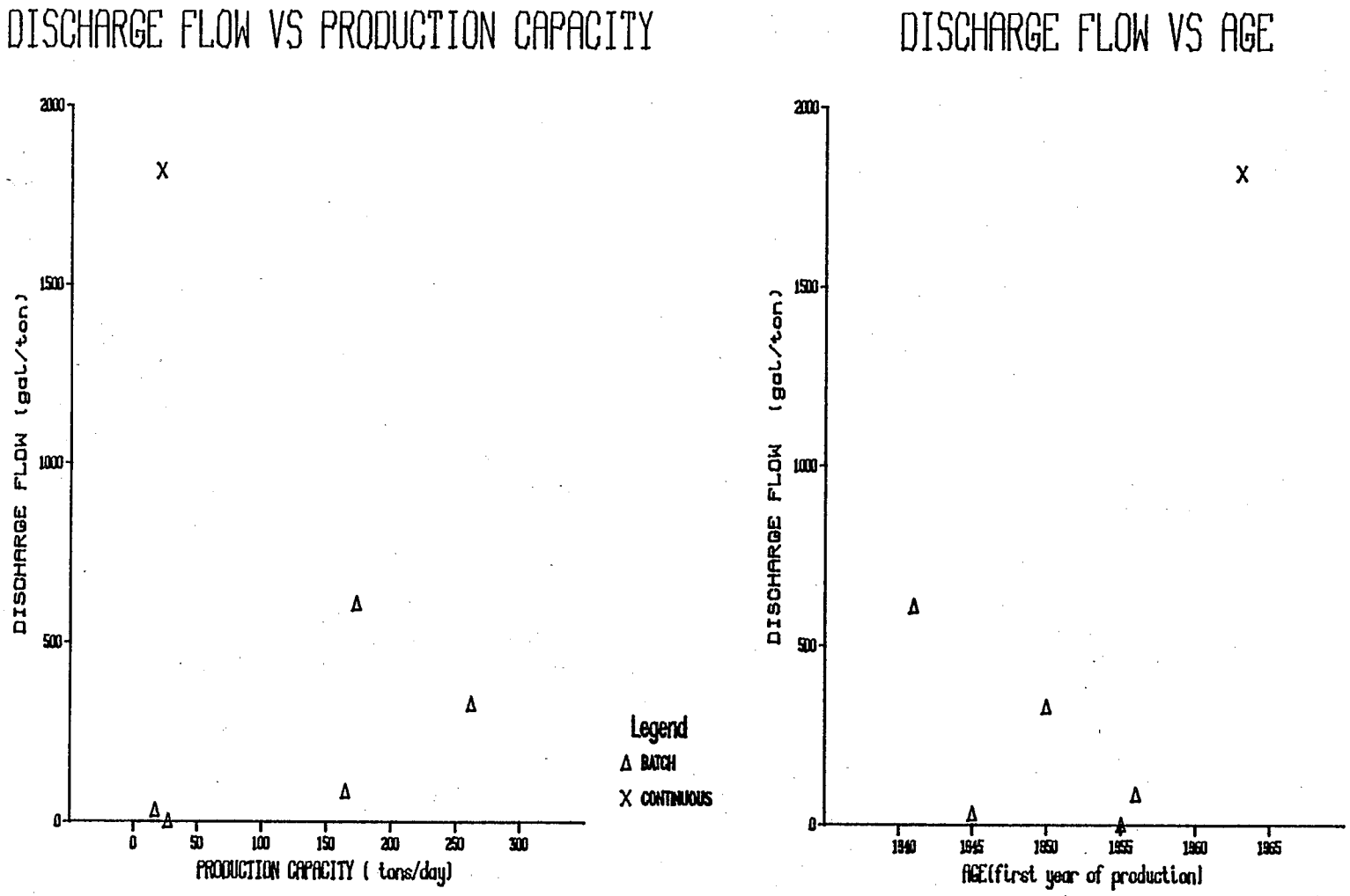

SALT BATH DESCALING SUBCATEGORY

SECTION V

WATER USE AND WASTE CHARACTERIZATION

Introduction

Process water use is a major factor in estimating pollutant loads and pollutant removal costs. The importance of careful control of process water usage, to minimize treatment costs and pollutant discharges, cannot be overemphasized. Data from sampling surveys and the DCP responses were used to evaluate process water use and to obtain total wastewater volumes. Control and treatment technology in place and operating practices were identified for each line, and the ultimate disposal of wastewater was examined. The characteristics of descaling operations are reviewed below.

The wastewater characterization for oxidizing operations is based upon data obtained during field sampling programs conducted at five batch and two continuous facilities. Two of the batch facilities and one of the continuous facilities were visited during the original study. The two batch facilities were visited again during this study. In these instances, the more recent data are used for the purpose of wastewater characterization. During this study, sampling was conducted for the previously limited pollutants, as well as for toxic pollutants.

To provide the data needed to characterize reducing operations, field sampling programs were conducted at three plants. One of these plants was visited during the original study. One plant has both reducing and batch oxidizing operations.

Description of Salt Bath Descaling Operations and Wastewater Sources

A. Oxidizing Operations

As shown in Figures III-1 and III-2, descaling is performed in both the batch and continuous modes. Often descaling operations precede pickling operations. However, only the wastewaters generated in the oxidizing operations are considered herein.

Wastewaters are generated at two points in oxidizing operations; in the salt bath tank and in the subsequent quench or rinse steps. The bath is a molten salt solution that contains high levels of sodium compounds together with other constituents. The same solution remains in the bath for an extended period and is used to process a large tonnage of product before being replaced. One company reported replacing the salt bath in one line only twice in 17 years.

After the same bath has been used for some time, it becomes contaminated with scale from the steel, oils that are burned off in the high temperature bath, metals and other compounds. When a certain level of contamination is reached, the descaling properties of the bath diminish to a point where it must either be replenished or replaced with fresh solutions. Because of the highly contaminated nature of the salt solution and because of its relatively small volume, this waste is generally hauled off-site for disposal by private contractors. These salt solutions are treated at some lines by bleeding a small volume of the waste solutions into the treatment system over a period of hours or days.

The other source of wastewater from oxidizing operations is the discharge from the quench or rinse step that follows the descaling operation. This discharge is the primary wastewater source regulated by the Agency. All flow rates and wastewater characteristics referred to in this report pertain to this source. The Agency believes that properly designed and operated treatment systems for rinsewaters are capable of treating spent descaling baths that are introduced into the treatment system gradually. The spent baths are also regulated by the Agency.

After treatment in the heated oxidizing solution, the product must be rinsed. Rinsing satisfies four objectives: (1) removing salt solution "carried over" from the oxidizing bath; (2) halting the action of the salt solution on the surface of the product, (3) inducing a thermal shock which helps "break" the scale on the surface of the process material; and, (4) cooling the product to reduce its temperature to a safe level prior to acid pickling.

Fresh, cool water is continually added to the rinse tanks, if possible, to keep the temperature of the water in the rinse tank fairly constant and to keep the rinse relatively clean. Thus, there is usually a continuous discharge from the quench or rinse tanks. Wastewaters generated in the quench and rinse steps contain significant levels of suspended solids, total and hexavalent chromium, and have elevated pH and temperature levels. The quality of the rinse water may vary greatly depending on the age of the salt solution in the oxidizing bath, the amount of carry-over of solution into the rinse tank, and the amount of product processed. To minimize the amount of carry-over, the product is usually held over the salt bath (in batch operations) for some time after it has been immersed to ensure drainage of solution from the process material.

Flow data and net raw waste concentrations for the pollutants are presented in Table V-1 for oxidizing operations. Toxic pollutant data are presented only for those pollutants detected in the raw waste at levels greater than 0.010 mg/l above water intake levels. Net concentration data were used to describe the actual levels of pollutants contributed by oxidizing operations. However, the limitations and standards were developed on a gross

basis, because the effect of pollutants present in water intake is insignificant (see Section VII).

B. Reducing Operations

As reducing descaling is carried out in the same manner as oxidizing descaling operations, the general process flow diagrams for descaling (Figures III-1 and III-2) also apply to reducing operations. The only significant difference between oxidizing and reducing descaling is in the salt solutions used. While the compounds in the oxidizing bath act as extremely strong oxidizing agents, the reducing salt baths depend on the strong reducing properties of sodium hydride to aid in scale removal. Otherwise, the two descaling processes are very similar.

Because of the many similarities, the discussion presented previously for the oxidizing salt bath descaling operations also applies to reducing salt bath descaling operations. In fact, the operations are so similar, that many lines that previously used reducing baths have been converted to oxidizing baths with only minor modifications.

Because of the different salt solution used in the reducing bath process, the flow and wastewater characteristics are significantly different from those of the oxidizing bath operations. The flow rate averages 325 gal/ton for batch operations and 1820 gal/ton for continuous operations. Many of the same pollutants are found in the wastewaters from both processes, but generally, they are found at different levels. In addition, cyanide is sometimes generated in the reducing process, while no significant levels of cyanide were found in the discharges from the oxidizing operations. Net raw waste data are presented in Table V-2 for reducing bath operations. As previously mentioned, only those toxic pollutants found at levels greater than 0.010 mg/l are included in this table.

TABLE V-1

SUMMARY OF ANALYTICAL DATA FROM SAMPLED PLANTS
NET CONCENTRATIONS OF POLLUTANTS IN RAW WASTEWATER (1)
SALT BATH DESCALING - OXIDIZING

Reference No.	424-01	176-04	440A-01	432K	684D	
Plant Code	131	132	138	137	Q	
Sample Point	B-A	H-A	B-A	B-A	13-10	Average (2)
Flow (GPT)	494	461	342	280	108	337
Process Type	Batch	Batch	Batch	Cont.	Cont.	
Product	Plate	Rod, Wire	Bar, Rod	Sheet	Strip	
Suspended Solids	119.4	651	191	1219	231	482.3
Chromium, Hexavalent	124	261	79.5	NR	424	222.1
Dissolved Iron	NA	ND	-	-	-	N/A
pH, units	8.2	7.8	7.3	7.3	7.2	7.2-8.2
023 Chloroform	-	0.040	*	-	NA	0.01
044 Methylene Chloride	0.0	0.231	0.115	-	NA	0.087
114 Antimony	0.008	NA	-	0.109	NA	0.039
115 Arsenic	0.023	NA	NA	0.013	NA	0.018
118 Cadmium	*	0.01	ND	*	0.02	0.006
119 Chromium	33.7	365	102	36.4	440	195.4
120 Copper	0.005	4.73	0.03	0.812	0.01	1.12
122 Lead	*	0.03	ND	*	ND	0.006
123 Mercury	-	NA	NA	0.0001	0.03	0.010
124 Nickel	-	37.5	0.790	1.33	0.03	7.93
125 Selenium	0.021	NA	NA	0.06	ND	0.027
127 Thallium	-	NA	NA	0.205	NA	0.103
128 Zinc	0.0	NA	ND	0.25	-	0.063

(1) All values are in mg/l unless otherwise noted.
(2) All negative values were included in the average as zeros.

* : Value is not quantifiable.
\- : Negative value
ND : Not Detected
NA : Not Analyzed
N/A: Not Available

TABLE V-2

SUMMARY OF ANALYTICAL DATA FROM SAMPLED PLANTS
NET CONCENTRATIONS OF POLLUTANTS IN RAW WASTEWATER(1)
SALT BATH DESCALING - REDUCING

Reference No.	176-01	256N-01	440A	
Plant Code	132	139	L	
Sample Point	O-A	B-A	(9-11)	Average(2)
Flow (GPT)	611	1.8	1200	604
Process Type	Batch	Batch	Batch	
Product	Bar, Rod, Wire	Bar, Billet	N/A	
Suspended Solids	465	388	370	408
Chromium, Hexavalent	0.004	0.77	ND	0.258
Dissolved Iron	0.415	36.5	0.36	12.4
pH, units	7.8	8.2	9.5	7.8-9.5
22 Parachlorometacresol	0.012	ND	NR	0.0060
34 2,4-Dimethylphenol	ND	0.015	NA	0.0075
64 Pentachlorophenol	0.012	ND	NA	0.006
65 Phenol	ND	0.013	NR	0.0065
114 Antimony	0.2	0.65	NR	0.53
118 Cadmium	*	0.12	NR	0.06
119 Chromium	15.3	1.5	ND	5.6
120 Copper	0.67	0.48	ND	0.383
121 Cyanide	0.0025	0.0005	0.106	0.0363
122 Lead	0.25	1.1	ND	0.45
124 Nickel	8.48	0.31	ND	2.93
125 Selenium	NR	0.035	ND	0.018
126 Silver	*	0.11	NR	0.055
128 Zinc	0.075	0.20	-	0.092

(1) All values are in mg/l unless otherwise noted.
(2) All negative values were included in the average as zeros.

* : Value is not quantifiable.
\- : Negative value.
ND : Not Detected.
NA : Not Analyzed.
N/A: Not Available.

SALT BATH DESCALING SUBCATEGORY

SECTION VI

WASTEWATER POLLUTANTS

Introduction

A general discussion of the process used in selecting the pollutants to be limited is included in Section VI of Volume I.

Rationale for the Selection of Wastewater Pollutants

Wastewaters are generated in salt bath descaling operations as a result of the quenching or rinsing of the steel product following its immersion in salt baths. These waters become contaminated with both the materials present on the product surface and any salt solution carried over from the process. Tables VI-1 and VI-2 list all pollutants found at concentrations greater than 0.010 mg/l at any plant, or reported as being present in the DCP responses for oxidizing and reducing operations, respectively. Tables VI-3 and VI-4 list all pollutants found at average concentrations greater than 0.010 mg/l for oxidizing and reducing operations, respectively, that are considered representative of descaling wastewaters. In the original guidelines, six pollutants were limited for both oxidizing and reducing operations. The pollutants were total suspended solids, dissolved iron, hexavalent chromium, dissolved chromium, cyanide and pH. However, additional data gathered during this study indicate changes are warranted in the selection of pollutants.

Oxidizing Operations

Cyanide, a pollutant which was originally considered characteristic of oxidizing wastewaters, has not been selected, since the additional data gathered during this study indicate that cyanide is not found at significant levels. Also, instead of developing limitations for dissolved chromium, the Agency has promulgated limitations and standards for total chromium. This change was brought about mainly due to the designation of total chromium as a "toxic" pollutant.

Hexavalent and total chromium are included on the list of characteristic pollutants for oxidizing operations, as there are significant levels of these pollutants in wastewater from oxidizing operations. The presence of chromium and the other toxic metals in oxidizing wastewaters is attributable to the aggressive nature of the salt bath in attacking the product surface. Chromium is not only released from the product by the oxidizing solution, but it is also an inherent component of the solution. The toxic metals also comprise a portion of the suspended solids generated in the process wastewaters. The suspended solids are present in oxidizing wastewaters primarily due to the pickup of the scale and other materials on the surface of

the product. The limitations for pH reflect a range within which environmental damage is avoided. In order to accomplish the desired level of treatment, process wastewaters require two pH adjustments: one for treatment of hexavalent chromium and the other for neutralization to promote settling prior to discharge. The Agency has also selected nickel as a limited pollutant. Chromium and nickel serve as indicators for other toxic metal pollutants. The Agency has limited chromium and nickel in specialty steel finishing subcategories to facilitate combined treatment of compatible wastewaters.

Reducing Operations

For reducing operations, the Agency is also establishing limitations for chromium and nickel. Hexavalent chromium was found in wastewaters from operations at an average concentration of 0.26 mg/l, substantially lower than for oxidizing wastewaters.

Unlike oxidizing wastewaters, cyanide is characteristic of reducing wastewaters. The presence of cyanide is the result of the addition of a carbon source (such as charcoal) to the reducing salt bath. The temperature and chemical makeup of the salt bath are such that cyanide can be generated when the carbon source is added. The industry reports that under certain operating conditions, high levels of cyanide can be generated. Hence, alkaline chlorination has been installed at several reducing plants as treatment for cyanide. The total suspended solids are primarily comprised of scale and other matter carried over into the rinse/quench tanks by the product. Reducing operation wastewaters must be neutralized, and thus pH is a limited wastewater characteristic.

TABLE VI-1

TOXIC POLLUNTANTS KNOWN TO BE PRESENT
SALT BATH DESCALING SUBCATEGORY
OXIDIZING

023	Chloroform
044	Methylene Chloride
114	Antimony
115	Arsenic
118	Cadmium
119	Chromium
120	Copper
122	Lead
123	Mercury
124	Nickel
125	Selenium
127	Thallium
128	Zinc

TABLE VI-2

TOXIC POLLUTANTS KNOWN TO BE PRESENT
SALT BATH DESCALING SUBCATEGORY
REDUCING

022	Parachlorometacresol
034	2, 4 - Dimethylphenol
064	Pentachlorophenol
065	Phenol
114	Antimony
118	Cadmium
119	Chromium
120	Copper
121	Cyanide
122	Lead
124	Nickel
125	Selenium
126	Silver
128	Zinc

TABLE VI-3

SELECTED POLLUTANTS
SALT BATH DESCALING SUBCATEGORY
OXIDIZING

	Hexavalent Chromium
	Total Suspended Solids
	pH
023	Chloroform
114	Antimony
115	Arsenic
119	Chromium
120	Copper
123	Mercury
124	Nickel
125	Selenium
127	Thallium
128	Zinc

TABLE VI-4

SELECTED POLLUTANTS
SALT BATH DESCALING SUBCATEGORY
REDUCING

	Dissolved Iron
	Hexavalent Chromium
	Total Suspended Solids
	pH
114	Antimony
118	Cadmium
119	Chromium
120	Copper
121	Cyanide
122	Lead
124	Nickel
125	Selenium
126	Silver
128	Zinc

SALT BATH DESCALING SUBCATEGORY

SECTION VII

CONTROL AND TREATMENT TECHNOLOGY

Introduction

This section presents the treatment practices currently used within the salt bath descaling subcategory. Also included are a summary of the sampling data for oxidizing and reducing operations and a description of the treatment practiced at each line. The data show the range of treatment practiced within this subcategory and the range of effluent quality achieved with the various treatment systems.

In order to develop the BPT, BAT, BCT, NSPS, PSES and PSNS effluent limitations and standards, the Agency examined the levels of treatment that exist within the subcategory. The different technologies were then formulated in an "add-on" fashion to the basic levels of treatment. The alternative treatment systems and corresponding effluent characteristics are presented in Sections IX through XIII.

The Agency developed the effluent limitations and standards on the basis of a review of effluent data obtained during plant visits and, in the case of certain advanced technologies, on the proven capabilities of those systems. Treatment system summaries, schematics and effluent data for the visited plants are presented in this section. Also, the impact of makeup water quality on raw wastewater pollutant loadings was examined.

Control and Treatment Technologies Salt Bath Descaling

Oxidizing Operations

The wastewater control and treatment technologies currently used at oxidizing operations vary to some degree. However, similar components are used to attain reductions in the levels of certain pollutants. Based upon data from the DCPs and the plant visits, the following summary of treatment and disposal technologies was developed for this subcategory.

The treatment systems installed at all oxidizing operations include physical/chemical controls. Also, over 60% of the operations, which provide treatment, use central treatment systems (i.e., other wastewaters are combined with the descaling wastewaters prior to treatment). These central treatment systems are generally designed primarily to reduce the levels of suspended solids and metals and to neutralize the pH of the discharge. The data for this and other subcategories were analyzed to determine whether central treatment systems can achieve the established limitations and standards. This

analysis showed that similar flow rates and effluent levels are achievable with both separate and central treatment systems.

Many of the treatment facilities for oxidizing operations are designed to provide sufficient treatment for discharge to a receiving stream, while others are designed to provide only limited pretreatment prior to discharge to publicly owned treatment works (POTWs).

Following is a summary of treatment technologies currently practiced at oxidizing operations. The discussion on the technologies, with the exception of chromium reduction, is equally applicable to reducing operations.

Chromium Reduction

Chromium is an inherent component of the oxidizing salt bath. In addition, chromium contained in the steel is released and discharged in large quantities in the rinse waters. Most of the chromium present in the raw wastewaters is in the hexavalent (+6) state. Because of the toxicity of this pollutant, treatment facilities are provided at most oxidizing operations to reduce levels of hexavalent chromium prior to discharge. The most widely used method to reduce the levels of Cr(+6) is chemical reduction. The chemical reduction process occurs in the following manner. The wastewaters from the quench or rinse tanks are treated with acid to lower the pH to the range of 2 to 4 standard units, which is the optimum range for the reduction of Cr (+6) to Cr (+3). A reducing agent such as gaseous sulfur dioxide is then added and the wastewaters are agitated in a mixing tank. The combination of the low pH and the action of the reducing agent reduces the chromium from the hexavalent state to the trivalent state. The chromium in this form can then be readily precipitated in subsequent chemical treatment steps.

Neutralization

After the chromium is reduced to its trivalent form at a low pH, the wastewaters at most lines are neutralized to bring the pH above 7, where optimum metal removal will occur in subsequent steps. If central treatment is practiced, neutralization can sometimes be achieved by mixing the acidic descaling wastewaters with alkaline wastes from other sources which are compatible for treatment. Wastewaters from oxidizing lines with central treatment systems are neutralized in this manner. If alkaline waste streams are not available or if descaling wastewaters are treated separately, a neutralizing agent is needed. Either lime or caustic is used at the oxidizing lines surveyed. Enough lime or caustic is added to raise the pH above 7, which is the optimum range for the precipitation of the toxic metals.

Precipitation and Clarification

Chemical additions are made at over 90% of the oxidizing lines to aid precipitation, with polymers most often used. From the chemical

addition step, neutralized wastewaters enter clarification facilities. For oxidizing operations, three types of clarification facilities are used; settling lagoons, thickeners or clarifiers. Clarifiers are in use at 83% of the oxidizing operations. The remaining 17% have either thickeners or settling lagoons.

Solid Waste Processing

The final treatment step involves processing suspended solids collected in the final clarification. Depending on the type of neutralizing agent used, various types and volumes of sludge are generated. As much as 10 tons of sludge per day can be generated at a large oxidizing operation. Sludge is dewatered by vacuum filtration or centrifugation with vacuum filtration being the more common technology.

Reducing Operations

Wastewaters are generated in reducing operations as a result of the quenching or rinsing of the product following the descaling removal process. Because of differences in the wastewaters, the use of different treatment configurations is necessary. There is very little hexavalent chromium released in the reducing process, therefore, chromium reduction treatment steps are not required. However, due to the nature of the process, there is a potential for the generation of significant levels of cyanide under certain operating conditions. As a result, most lines have a cyanide treatment step, with alkaline chlorination being the most common.

After the cyanide has been destroyed in this pretreatment step, wastewater treatment is similar to that for oxidizing operations. The wastewaters are neutralized with acid to lower the pH, a polymeric flocculant is added, and then clarification is carried out to remove the solids and metals precipitated in the process. Wastewaters from all reducing operations are treated in central treatment systems.

Control and Treatment Technologies
Considered for Toxic Pollutant Removal

The advanced treatment alternatives considered for descaling operations, and a short description of each, are presented below. These systems have been demonstrated in varying degrees in the salt bath descaling subcategory and in other industrial applications on wastewaters with similar characteristics. The treatment systems are discussed in greater detail in later sections with special emphasis on the applicability to the salt bath descaling subcategory.

Filtration

This technology is used to reduce the particulate toxic metals loadings. Filtration can be used as a last major component in a treatment system or may be used for pretreatment prior to treatment in another component (such as adsorption on activated carbon). Metals

removal is accomplished by passing the wastewater stream, either under pressure or by gravity, through a filter media. The filter media, generally sand, anthracite coal, or garnet, permits water passage but prevents the passage of a major portion of the particles suspended in the wastewater. The filter media itself can be comprised of a single type and size, various sizes of the same media, or a mixed media which contains several types and sizes.

The collected solids are removed from a filter by periodic backwashings, with the backwash commonly discharged to the treatment system influent. The backwash procedure involves the pumping of filter effluent through the filter in a direction opposite that of its operational flow direction. The backwash process usually begins with air agitation to both mix and scour the filter media. By returning the backwash to the system influent (with polymer addition), filtered solids contained in the backwash are removed by sedimentation in the treatment system. Filtration is used in many steel industry applications.

Sulfide Precipitation

Wastewater treatment systems which have a sulfide compound addition component are capable of reducing effluent metals concentrations below levels usually achieved in lime precipitation. Some of the toxic metals which can effectively be precipitated with sulfide are zinc, copper, chromium, nickel, lead and silver. The increased removal efficiencies can be attributed to the comparative solubilities of metal sulfides and metal hydroxides. Iron sulfide is often used to achieve the precipitation because this compound has a solubility which exceeds that of the heavy metal sulfides, and because this compound does not form high concentrations of sulfide ion, which could contribute to the formation of hydrogen sulfide, an objectionable gas. The typical sulfide precipitation system consists of neutralization, precipitation and a polishing filter. Refer to Volume I for additional information pertaining to sulfide treatment.

Vapor Compression Distillation (Evaporation)

Vapor compression distillation is typically used to concentrate a high dissolved solids wastestream (3,000-10,000 mg/l) to a slurry consistency (approximately 100,000 mg/l). The slurry discharge can be dried in a mechanical drier or allowed to crystallize in a small solar or steam-heated pond prior to final disposal. The distillate quality water generated by this system can be recycled to the descaling operation, thereby eliminating discharges. One desirable feature of this unit is its relative freedom from scaling. Because of the unique design of the system, calcium sulfate and silicate crystals grow in solution as opposed to depositing on heat transfer surfaces. Economic operation requires a high calcium to sodium ratio (hard water). Due to economic considerations, resulting primarily from the energy intensive nature of the process, only limited application is made of vapor compression distillation in processing wastewaters.

Installation of this system may be the only feasible way to consistently achieve zero discharge of process wastewaters at descaling operations.

Plant Visit Data

Table VII-1 provides a legend for the various control and treatment technology abbreviations used in the following tables and in other tables throughout this report. Table VII-2 presents a summary of raw and treated effluent data for oxidizing operations visited during the original guidelines survey. Table VII-3 presents a summary of raw and treated effluent data for oxdizing operations visited during the toxic pollutants survey. Tables VII-4 and VII-5 present similar data for reducing operations.

Plant Visits - Oxidizing Operations

The Agency conducted seven field sampling visits at five oxidizing operations. Three visits were conducted during the original study and four visits were conducted during this study. Two of the originally visited plants were visited again during this study. A brief description of each wastewater treatment facility follows. More details are available on the respective wastewater flow diagram for each plant.

Plant L (0440A-01) - Figure VII-1

The process rinse water from this batch oxidizing operation is treated in a neutralization tank prior to discharge to a municipal treatment facility.

Plant C (0424-01) - Figure VII-2

At the time of the initial survey, no treatment was provided.

Plant Q (0684D) - Figure VII-3

No treatment was provided at the time of the initial survey.

Plant 131 (0424-01) - Figure VII-4

Plant 131 and Plant C described above are the same. Since the time of the initial survey, a treatment facility has been installed. At the time of sampling, the treatment system was not yet operating, so a synthetic sample was generated by plant personnel for analysis. Treatment now installed consists of chromium reduction, neutralization with lime and other wastewaters, settling in a clarifier and final settling in a polishing lagoon. Sludges generated in the process are dewatered with vacuum filters.

Plant 132A (0176-04) - Figure VII-5

The wastewaters from this batch operation are treated in a central treatment system with wastewaters from several other sources. Treatment consists of chromium reduction, neutralization with acid or caustic depending on the wastewaters being treated, flocculation with polymer, and clarification with oil skimming. Sludges are dewatered in cyclones.

Plant 137 (0432K) - Figure VII-6

The continuous oxidizing operation wastewaters are treated in a central treatment system. The oxidizing wastewaters represent approximately 1.5% of the total flow to the treatment system. Treatment consists of lime neutralization and sedimentation in a settling lagoon. The discharge is directed to a receiving stream.

Plant 138 (0440A-01) - Figure VII-7

Plant 138 is the same as Plant L described above. No changes in treatment were noted between surveys.

Plant Visits - Reducing Operations

Three field sampling vists were conducted at reducing bath descaling operations; one visit during the original study and two visits during this study. One of the lines visited during this study also had an oxidizing operation. A brief description of each wastewater treatment system follows.

Plant L (0440A-01) - Figure VII-8

The reducing process rinse waters are discharged to a municipal treatment system after these wastes are mixed with other process water.

Plant 132B (0176-01) - Figure VII-5

Wastewaters from this reducing operation are treated in a central treatment system with wastewaters from several other sources. Treatment consists of neutralization with lime or acid depending on the wastewaters being treated, flocculation with polymer, and clarification with oil skimming. Sludges are dewatered in cyclones.

Plant 139 (0256N-01) - Figure VII-9

Reducing wastewaters are treated by alkaline chlorination, neutralization with acid and settling prior to discharge to a POTW.

Effect of Make-up Water Quality

Where the mass loading of a limited pollutant in the make-up water to a process is small in relation to the raw waste loading of that

pollutant, the impact of make-up water quality on wastewater treatment system performance is not significant, and in many cases, not measureable. In these instances, the Agency has determined that the respective effluent limitations and standards should be developed and applied on a gross basis.

Tables VII-6 and VII-7 present analyses of the impact of make-up water quality for sampled oxidizing and reducing operations, respectively. These data indicate that make-up waters add less than one percent of most of the limited conventional and toxic metal polutants found in raw waste loadings for salt bath descaling operations. The Agency considers the toxic metals intake concentrations for the sampled oxidizing operations to be anomalously high and not typical of intake waters at steel plants. Thus, the Agency has determined the limitations and standards for descaling operations should be applied on a gross basis, except to the extent provided by 40 CFR 122.63(h).

TABLE VII-1

OPERATING MODES, CONTROL AND TREATMENT TECHNOLOGIES AND DISPOSAL METHODS

Symbols

A. Operating Modes

1. OT — Once-Through

2. Rt,s,n — Recycle, where t = type waste
s = stream recycled
n = % recycled

t: U = Untreated
T = Treated

	s	n
P	Process Wastewater	% of raw waste flow
F	Flume Only	% of raw waste flow
S	Flume and Sprays	% of raw waste flow
FC	Final Cooler	% of FC flow
BC	Barometric Cond.	% of BC flow
VS	Abs. Vent Scrub.	% of VS flow
FH	Fume Hood Scrub.	% of FH flow

3. REt,n — Reuse, where t = type
n = % of raw waste flow

t: U = before treatment
T = after treatment

4. BDn — Blowdown, where n = discharge as % of raw waste flow

B. Control Technology

10. DI — Deionization

11. SR — Spray/Fog Rinse

12. CC — Countercurrent Rinse

13. DR — Drag-out Recovery

C. Disposal Methods

20. H — Haul Off-Site

21. DW — Deep Well Injection

TABLE VII-1
OPERATING MODES, CONTROL AND TREATMENT
TECHNOLOGIES AND DISPOSAL METHODS
PAGE 2

C. Disposal Methods (cont.)

22.	Qt,d	Coke Quenching, where t = type d = discharge as % of makeup t: DW = Dirty Water CW = Clean Water
23.	EME	Evaporation, Multiple Effect
24.	ES	Evaporation on Slag
25.	EVC	Evaporation, Vapor Compression Distillation

D. Treatment Technology

30.	SC	Segregated Collection
31.	E	Equalization/Blending
32.	Scr	Screening
33.	OB	Oil Collecting Baffle
34.	SS	Surface Skimming (oil, etc.)
35.	PSP	Primary Scale Pit
36.	SSP	Secondary Scale Pit
37.	EB	Emulsion Breaking
38.	A	Acidification
39.	AO	Air Oxidation
40.	GF	Gas Flotation
41.	M	Mixing
42.	Nt	Neutralization, where t = type t: L = Lime C = Caustic A = Acid W = Wastes O = Other, footnote

TABLE VII-1
OPERATING MODES, CONTROL AND TREATMENT
TECHNOLOGIES AND DISPOSAL METHODS
PAGE 3

D. Treatment Technology (cont.)

43. FLt — Flocculation, where t = type

t: L = Lime
A = Alum
P = Polymer
M = Magnetic
O = Other, footnote

44. CY — Cyclone/Centrifuge/Classifier

44a. DT — Drag Tank

45. CL — Clarifier

46. T — Thickener

47. TP — Tube/Plate Settler

48. SLn — Settling Lagoon, where n = days of retention time

49. BL — Bottom Liner

50. VF — Vacuum Filtration (of e.g., CL, T> or TP underflows)

51. Ft,m,h — Filtration, where t = type
m = media
h = head

t	m	h
D = Deep Bed	S = Sand	G = Gravity
F = Flat Bed	O = Other, footnote	P = Pressure

52. CLt — Chlorination, where t = type

t: A = Alkaline
B = Breakpoint

53. CO — Chemical Oxidation (other than CLA or CLB)

TABLE VII-1
OPERATING MODES, CONTROL AND TREATMENT
TECHNOLOGIES AND DISPOSAL METHODS
PAGE 4

D. Treatment Technology (cont.)

54. BOt — Biological Oxidation, where t = type

t: An = Activated Sludge
n = No. of Stages
T = Trickling Filter
B = Biodisc
O = Other, footnote

55. CR — Chemical Reduction (e.g., chromium)

56. DP — Dephenolizer

57. ASt — Ammonia Stripping, where t = type

t: F = Free
L = Lime
C = Caustic

58. APt — Ammonia Product, where t = type

t: S = Sulfate
N = Nitric Acid
A = Anhydrous
P = Phosphate
H = Hydroxide
O = Other, footnote

59. DSt — Desulfurization, where t = type

t: Q = Qualifying
N = Nonqualifying

60. CT — Cooling Tower

61. AR — Acid Regeneration

62. AU — Acid Recovery and Reuse

63. ACt — Activated Carbon, where t = type

t: P = Powdered
G = Granular

64. IX — Ion Exchange

65. RO — Reverse Osmosis

66. D — Distillation

TABLE VII-1
OPERATING MODES, CONTROL AND TREATMENT
TECHNOLOGIES AND DISPOSAL METHODS
PAGE 5

D. Treatment Technology (cont.)

67.	AA1	Activated Alumina
68.	OZ	Ozonation
69.	UV	Ultraviolet Radiation
70.	CNTt,n	Central Treatment, where t = type n = process flow as % of total flow t: 1 = Same Subcats. 2 = Similar Subcats. 3 = Synergistic Subcats. 4 = Cooling Water 5 = Incompatible Subcats.
71.	On	Other, where n = Footnote number
72.	SB	Settling Basin
73.	AE	Aeration
74.	PS	Precipitation with Sulfide

TABLE VII-2

SUMMARY OF ANALYTICAL DATA FROM SAMPLED PLANTS
ORIGINAL GUIDELINES SURVEY
SALT BATH DESCALING - OXIDIZING

Raw Wastewater

Reference No.	440-01		424-01		684D			
Plant Code	L		C		Q			
Sample Point	8		9		13		Average	
Flow, (GPT)	398		494		108		253.0	
Process Type	Batch		Batch		Continuous			
Product	Bar, Rod		Plate		Strip			
	mg/l	lbs/1000lbs	mg/l	lbs/1000lbs	mg/l	lbs/1000lbs	mg/l	lbs/1000lbs
Suspended Solids	433	0.72	103	0.21	244	0.11	338	0.42
Chromium, Hexavalent	100	0.17	ND	ND	424	0.19	262	0.18
pH, units	12.2		12.0		13.1		12.2-13.1	
23 Chloroform	NR	NR	NR	NR	NR	NR	NR	NR
114 Antimony	NR	NR	NR	NR	NR	NR	NR	NR
115 Arsenic	NR	NR	NR	NR	NR	NR	NR	NR
119 Chromium	116	0.19	ND	ND	440	0.20	278	0.20
120 Copper	0.01	0.000017	ND	ND	0.03	0.000014	0.02	0.000016
123 Mercury	NR	NR	NR	NR	0.03	0.000014	0.03	0.000014
124 Nickel	0.01	0.000017	0.07	0.00014	0.03	0.000014	0.037	0.000016
125 Selenium	ND	ND	ND	ND	ND	ND	ND	ND
127 Thallium	NR	NR	NR	NR	NR	NR	NR	NR
128 Zinc	0.001	Neg.	0.002	Neg.	0.018	Neg.	0.010	Neg.

TABLE VII-2
SUMMARY OF ANALYTICAL DATA FROM SAMPLED PLANTS
ORIGINAL GUIDELINES SURVEY
SALT BATH DESCALING - OXIDIZING
PAGE 2

Treated Effluents

Reference No.	440A-01		424-01		684D	
Plant Code	L		C		Q	
Sample Point	8		9		13	
Flow, (GPT)	398		494		108	
C&TT	NW,SL		VF,CR,FLP,NL,NW, NA,CL,SL,T		Not Available	
	mg/l	lbs/1000 lbs	mg/l	lbs/1000 lbs	mg/l	lbs/1000 lbs
Suspended Solids	433	0.72	103	0.21	244	0.11
Chromium, Hexavalent	100	0.17	ND	ND	424	0.19
pH, units	12.2		12.0		13.1	
23 Chloroform	NR	NR	NR	NR	NR	NR
114 Antimony	NR	NR	NR	NR	NR	NR
115 Arsenic	NR	NR	NR	NR	NR	NR
119 Chromium	116	0.19	ND	ND	440	0.20
120 Copper	0.01	0.000017	ND	ND	0.03	0.000014
123 Mercury	NR	NR	NR	NR	0.03	0.000014
124 Nickel	0.01	0.000017	0.07	0.00014	0.03	0.000014
125 Selenium	ND	ND	ND	ND	ND	ND
127 Thallium	NR	NR	NR	NR	NR	NR
128 Zinc	0.001	Neg.	0.02	Neg.	0.018	Neg.

(1) Values which are listed as ND are included in the calculated average as zero. Values which are listed as NR are not included. Also, the data for plant C (424-01), are not included in the average since this plant was revisited during the Toxic Pollutant Survey. Those more recent data appear on Table VII-3.

ND : Not Detectable
NR : Not Reported
Neg.: Negligible, load is less than 0.00001 lbs/1000 lbs.

TABLE VII-3

SUMMARY OF ANALYTICAL DATA FROM SAMPLED PLANTS
TOXIC POLLUTANT STUDY
SALT BATH DESCALING - OXIDIZING

Raw Wastewater

Reference No.	424-01		176-04		440A-01		432K		Average(1)		Overall Average(2)	
Plant Code	131		132		138		137		394		368	
Sample Point	B		H		B		B					
Flow (GPT)	494		461		342		280					
Process Type	Batch		Batch		Batch		Cont.					
Products	Plate		Rod Wire		Bar, Rod		Sheet					
	mg/l	lbs/1000 lbs	mg/l	lbs/1000 lbs	mg/l	lbs/1000 lbs	mg/l	lbs/1000 lbs	mg/l	lbs/1000 lbs	mg/l	lbs/1000 lbs
Suspended Solids	124	0.26	678	1.30	194	0.28	1228	1.43	556	0.82	484	0.68
Chromium, Hexavalent	124	0.26	262	0.5	79.5	0.13	NR	NR	155	0.30	198	0.25
pH, units	12.6		12.4		11.7		13.0		11.7-13.0		11.7-13.1	
23 Chloroform	0.060	0.00012	0.041	0.000079	*	*	0.015	0.000018	0.039	0.000072	0.039	0.000072
114 Antimony	0.021	0.00004	0.45	0.00087	*	*	0.14	0.00016	0.20	0.00036	0.20	0.00036
115 Arsenic	0.030	0.00006	NR	NR	NR	NR	0.019	0.000022	0.024	0.000041	0.024	0.000041
119 Chromium	367	0.76	365	0.70	102	0.15	36.7	0.043	218	0.41	238	0.34
120 Copper	0.13	0.00027	4.75	0.0091	0.050	0.000071	0.88	0.0010	1.45	0.0026	0.98	0.0017
123 Mercury	NR	NR	NR	NR	NR	NR	<0.010	**	<0.010	**	0.015	0.00001
124 Nickel	0.60	0.0012	37.5	0.072	0.86	0.0012	1.67	0.0020	10.16	0.019	6.78	0.013
125 Selenium	0.027	0.000056	NR	NR	NR	NR	0.069	0.000081	0.048	0.00043	0.024	0.00022
127 Thallium	0.032	0.00007	NR	NR	NR	NR	0.21	0.00024	0.12	0.00016	0.12	0.00016
128 Zinc	0.12	0.00025	0.080	0.00015	0.010	0.000014	0.34	0.00039	0.14	0.00020	0.095	0.00013

TABLE VII-3
SUMMARY OF ANALYTICAL DATA FROM SAMPLED PLANTS
TOXIC POLLUTANT STUDY
SALT BATH DESCALING - OXIDIZING
PAGE 2

Treated Effluent

Reference No.	424-01		176-04(5)		440A-01		432K	
Plant Code	131		132		138		137	
Sample Point	C		H (90) / Z(769) ZZ(772)		B		D	
Flow (GPT)	494		461		342		280	
C&TT	VF,CR,FLP,NL, NW,NA,CL,SL,T		CNT(17),CR,PSP,NA, CO,CLA,EB,FLP,NL, NW,SL,CL,SSP,T,SS,CY		NW,SL		NL,SL	
	mg/l	lbs/1000 lbs	mg/l	lbs/1000 lbs	mg/l	lbs/1000 lbs	mg/l	lbs/1000 lbs
Suspended Solids	49.5	0.10	16.5	0.054	194	0.28	91.7	0.11
Chromium, Hexavalent	(3)	(4)	0.042	0.53	79.5	0.13	NR	NR
pH, units	9.4		7.6		11.7		6.2	
23 Chloroform	0.14	0.00030	*	0.000050	*	*	0.065	0.000076
114 Antimony	0.20	0.00040	*	*	*	*	0.038	0.000044
115 Arsenic	0.009	**	*	*	NR	NR	0.007	**
119 Chromium	15.0	0.031	0.18	0.026	102	0.15	2.67	0.0031
120 Copper	0.061	0.00012	0.05	0.00023	0.05	0.000071	0.15	0.00017
123 Mercury	<0.01	**	NR	NR	NR	NR	<0.010	**
124 Nickel	0.25	0.00050	1.35	0.0072	0.84	0.0012	6.0	0.0070
125 Selenium	0.003	**	*	*	NR	NR	*	*
127 Thallium	*	**	*	*	NR	NR	*	*
128 Zinc	0.034	0.000070	0.04	**	0.010	0.000014	0.18	0.00021

Note: For C&TT Code definitions, see Table VII-1.

(1) Values listed as ND are included in average calculations as zero. Values listed as NR are not included.
(2) Average of all the data listed on Tables VII-2 & VII-3 except Plant C (see footnote 1, Table VII-2).
(3) Values for hex-chromium determined to be unreliable.
(4) Calculations not made because of unreliable concentration value.
(5) The lbs/1000lbs value for this operation cannot be derived directly from the concentrations and flow rates shown.

* : Value is not quantifiable.
** : Less than 0.00001 lbs/1000 lbs
NR : Not Reported
ND : Not Detected

TABLE VII-4

SUMMARY OF ANALYTICAL DATA FROM SAMPLED PLANTS
ORIGINAL GUIDELINES STUDY
SALT BATH DESCALING - REDUCING

Raw Wastewater

Reference No.	440A	
Plant Code	L	
Sample Point	9	
Flow (GPT)	1200	
	mg/1	lbs/1000 lbs
Suspended Solids	376	1.88
Dissolved Iron	0.36	0.0018
Hexavalent Chromium	ND	ND
pH, units	11.9	
114 Antimony	NR	NR
118 Cadmium	ND	ND
119 Chromium	ND	ND
120 Copper	ND	ND
121 Cyanide	0.11	0.00053
122 Lead	ND	ND
124 Nickel	ND	ND
125 Selenium	ND	ND
126 Silver	NR	NR
128 Zinc	ND	ND

Treated Effluent

Reference No.	440A	
Plant Code	L	
Sample Point	9	
Flow (GPT)	1200	
C&TT(1)	NW,SL	
	mg/1	lbs/1000 lbs
Suspended Solids	376	1.88
Dissolved Iron	0.36	0.0018
Hexavalent Chromium	ND	ND
pH, units	11.9	
114 Antimony	NR	NR
118 Cadmium	ND	ND
119 Chromium	ND	ND
120 Copper	ND	ND
121 Cyanide	0.11	0.00053
122 Lead	ND	ND

TABLE VII-4
SUMMARY OF ANALYTICAL DATA FROM SAMPLED PLANTS
ORIGINAL GUIDELINES STUDY
SALT BATH DESCALING - REDUCING
PAGE 2

	mg/l	lbs/1000 lbs
124 Nickel	ND	ND
125 Selenium	ND	ND
126 Silver	NR	NR
128 Zinc	ND	ND

(1) For C&TT Code definitions, see Table VII-1.

ND: Not Detected
NR: Not Reported

TABLE VII-5

SUMMARY OF ANALYTICAL DATA FROM SAMPLED PLANTS
TOXIC POLLUTANT STUDY
SALT BATH DESCALING - REDUCING

Raw Wastewater

Reference No.	176-01		256N-01		Average(1)		Overall Average(2)	
Plant Code	132		139					
Sample Code	0		B					
Flow (GPT)	615		1.8		308.4			
	mg/1	lbs/1000 lbs	mg/1	lbs/1000 lbs	mg/1	lbs/1000 lbs	mg/1	lbs/1000 lbs
Suspended Solids	492	1.26	396	0.0029	444	0.63	421	1.05
Dissloved Iron	0.45	0.0012	36.5	0.00027	18.5	0.00074	12.4	0.0011
Hexavalent Chromium	0.004	0.000010	0.77	0.000005	0.39	0.000008	0.26	0.000005
pH, units	12.4		11.4		11.4-12.4		11.4-12.4	
114 Antimony	0.20	0.00051	0.75	0.0000056	0.48	0.00026	0.48	0.00026
118 Cadmium	0.0050	**	0.12	0.000001	0.062	0.0000005	0.042	0.0000003
119 Chromium	15.3	0.039	1.5	0.000011	8.4	0.020	5.6	0.013
120 Copper	0.67	0.0017	0.52	0.0000039	0.60	0.00085	0.40	0.00057
121 Cyanide	ND	ND	0.0050	**	0.0025	**	0.038	0.00018
122 Lead	0.25	0.00064	1.1	0.0000083	0.68	0.00032	0.45	0.00022
124 Nickel	8.7	0.022	0.31	0.0000023	4.5	0.011	3.0	0.0073
125 Selenium	NR	NR	0.035	0.0000003	0.035	0.0000003	0.018	0.0000002
126 Silver	*	*	0.12	0.0000009	0.060	0.0000004	0.060	0.0000004
128 Zinc	0.075	0.00019	0.20	0.0000015	0.14	0.000096	0.092	0.000064

TABLE VII-5
SUMMARY OF ANALYTICAL DATA FROM SAMPLED PLANTS
TOXIC POLLUTANT STUDY
SALT BATH DESCALING - REDUCING
PAGE 2

Treated Effluent

Reference No.	176-01(3)		256N-01(3)	
Plant Code	132		139	
Sample Point	0(106) / Z(769) ZZ(772)		B-1 (0.04) / B-1 (0.04) + C-1 (4.58) + D-1 (0.04) E-1 (4.79)	
Flow (GPT)	615		1.8	
C&TT	CNT(17),CR,PSP,NA, CO,CLA,EB,FLP,NC,NW, CL,SL,SSP,T,SS,CY		CLA,NA,SL,CNT(66)	
	mg/1	lbs/1000 lbs	mg/1	lbs/1000 lbs
Suspended Solids	16.5	0.0445	69	0.00017
Dissolved Iron	0.83	0.000004	0.23	**
Hexavalent Chromium	0.041	0.0000017	-	-
pH, units	7.6		8.2	
114 Antimony	*	*	0.25	0.000055
118 Cadmium	*	*	0.01	**
119 Chromium	0.18	0.00013	47.8	0.00000092
120 Copper	0.05	0.000038	0.05	0.0000023
121 Cyanide	0.035	**	0.37	**
122 Lead	0.05	0.000035	0.05	0.00000021
124 Nickel	1.35	0.0020	0.21	**
125 Selenium	*	*	*	*
126 Silver	*	*	0.02	0.0000013
128 Zinc	0.04	0.0000017	0.025	**

Note: For C&TT Code Definitions, see Table VII-1.

(1) Values listed as ND are included in average calculations as zero. Values listed as NR are not included.
(2) Average of values from Tables VII-4 and VII-5.
(3) The lbs/10001bs value for this operation cannot be derived directly from the concentrations and flow rates shown.
* : Value is not quantifiable.
** : Less than 0.0000001 lbs/1000 lbs
NR : Not Reported
ND : Not Detected

TABLE VII-6

NET CONCENTRATION AND LOAD ANALYSIS
SALT BATH DESCALING - OXIDIZING

Make-up Water → [Salt Bath Descaling Oxidizing Model Size: 103 TPD] → Raw Wastewater

103 TPD x 357 GPT = 36,771 GPD

103 TPD x 357 GPT = 36,771 GPD

Regulated Pollutants	Make-up Conc. (mg/l) Min.	Make-up Conc. (mg/l) Max.	Make-up Conc. (mg/l) Avg.	Make-up Avg. Load (lbs/day)	Raw Waste Avg. Conc. (mg/l)	Raw Waste Avg. Load (lbs/day)	Make-up as a % of Raw Waste Load
Total Suspended Solids	<1.0	51	10	3.07	1,200	368.0	0.83
119 Chromium	<0.024	1.000	0.19	0.058	450	138.0	0.04
124 Nickel	0.020	3.0	0.12	0.037	2.0	0.61	6.07

TABLE VII-7

NET CONCENTRATION AND LOAD ANALYSIS
SALT BATH DESCALING - REDUCING

Make-up Water → [Salt Bath Descaling Reducing Model Size: 99 TPD] → Raw Wastewater

99 TPD x 586 GPT = 58,014 GPD

99 TPD x 586 GPT = 58,014 GPD

Regulated Pollutants	Make-up Conc. (mg/l) Min.	Make-up Conc. (mg/l) Max.	Make-up Conc. (mg/l) Avg.	Make-up Avg. Load (lbs/day)	Raw Waste Avg. Conc. (mg/l)	Raw Waste Avg. Load (lbs/day)	Make-up as a % of Raw Waste Load
Total Suspended Solids	1.0	51	18	8.71	500	241.9	3.60
119 Chromium	<0.030	<0.030	<0.030	0.0	5.0	2.42	0.62
121 Cyanide	<0.001	<0.001	<0.001	0.0	1.0	0.48	0.10
124 Nickel	<0.020	0.030	0.010	0.005	5.0	2.42	0.62

PROCESS: SALT BATH DESCALING-OXIDIZING

PLANT: L

PRODUCTION: 32.8 metric tons steel/day
(36.2 tons steel/day)

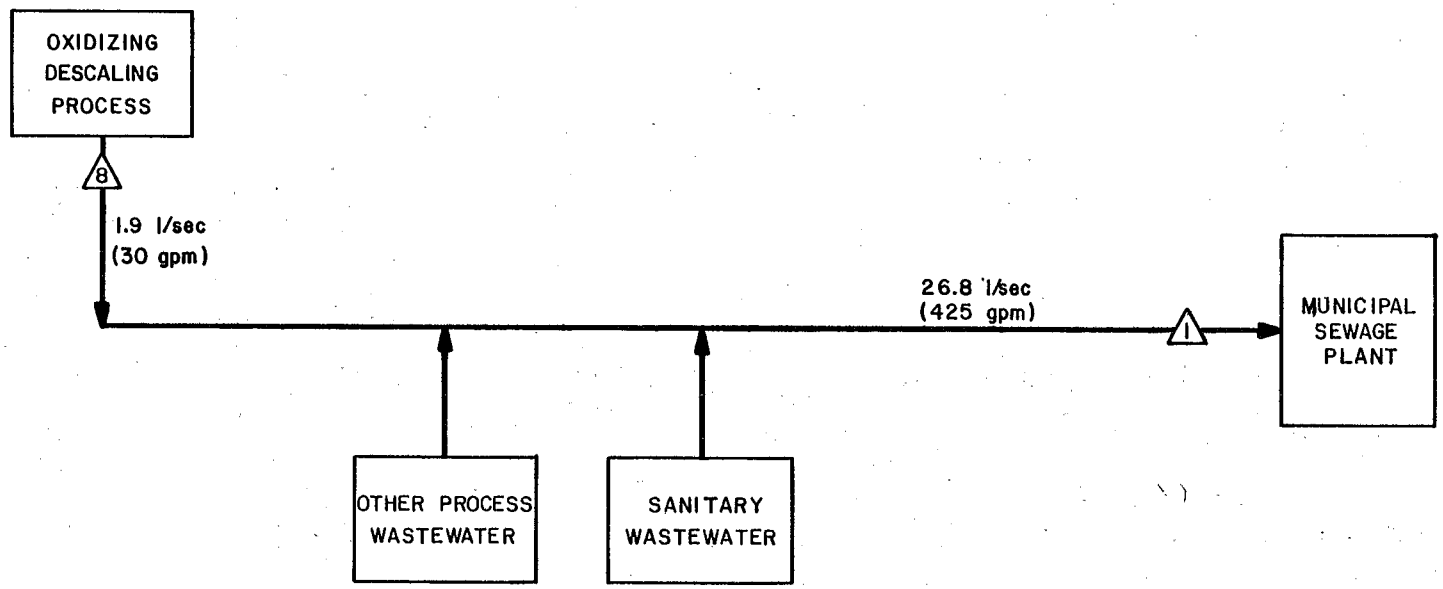

△ SAMPLING POINTS

ENVIRONMENTAL PROTECTION AGENCY
STEEL INDUSTRY STUDY
SALT BATH DESCALING
WASTEWATER TREATMENT SYSTEM
WATER FLOW DIAGRAM

Dwn. 2/26/79

FIGURE VII-1

PROCESS: SALT BATH DESCALING-OXIDIZING

PLANT: C

PRODUCTION: 15.9 metric tons steel/day
(17.5 tons steel/day)

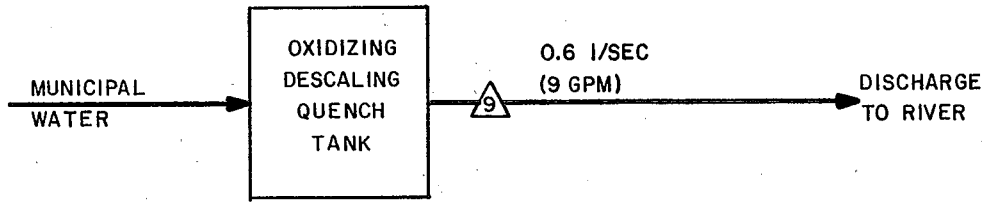

ENVIRONMENTAL PROTECTION AGENCY

STEEL INDUSTRY STUDY
SALT BATH DESCALING
WASTEWATER TREATMENT SYSTEM
WATER FLOW DIAGRAM

Dwn.2/26/79

FIGURE VII-2

PROCESS: SALT BATH DESCALING-OXIDIZING

PLANT: Q

PRODUCTION: 60.3 metric tons steel/day
(66.5 tons steel/day)

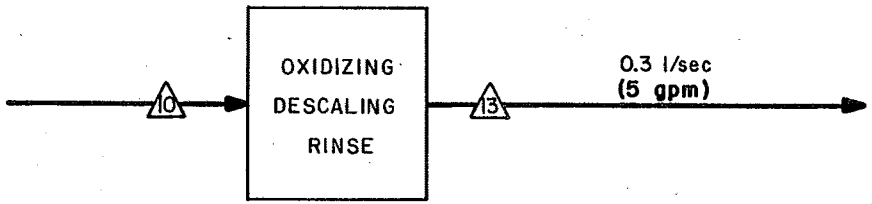

ENVIRONMENTAL PROTECTION AGENCY

STEEL INDUSTRY STUDY
SALT BATH DESCALING
WASTEWATER TREATMENT SYSTEM
WATER FLOW DIAGRAM

Dwn. 2/26/79

FIGURE VII-3

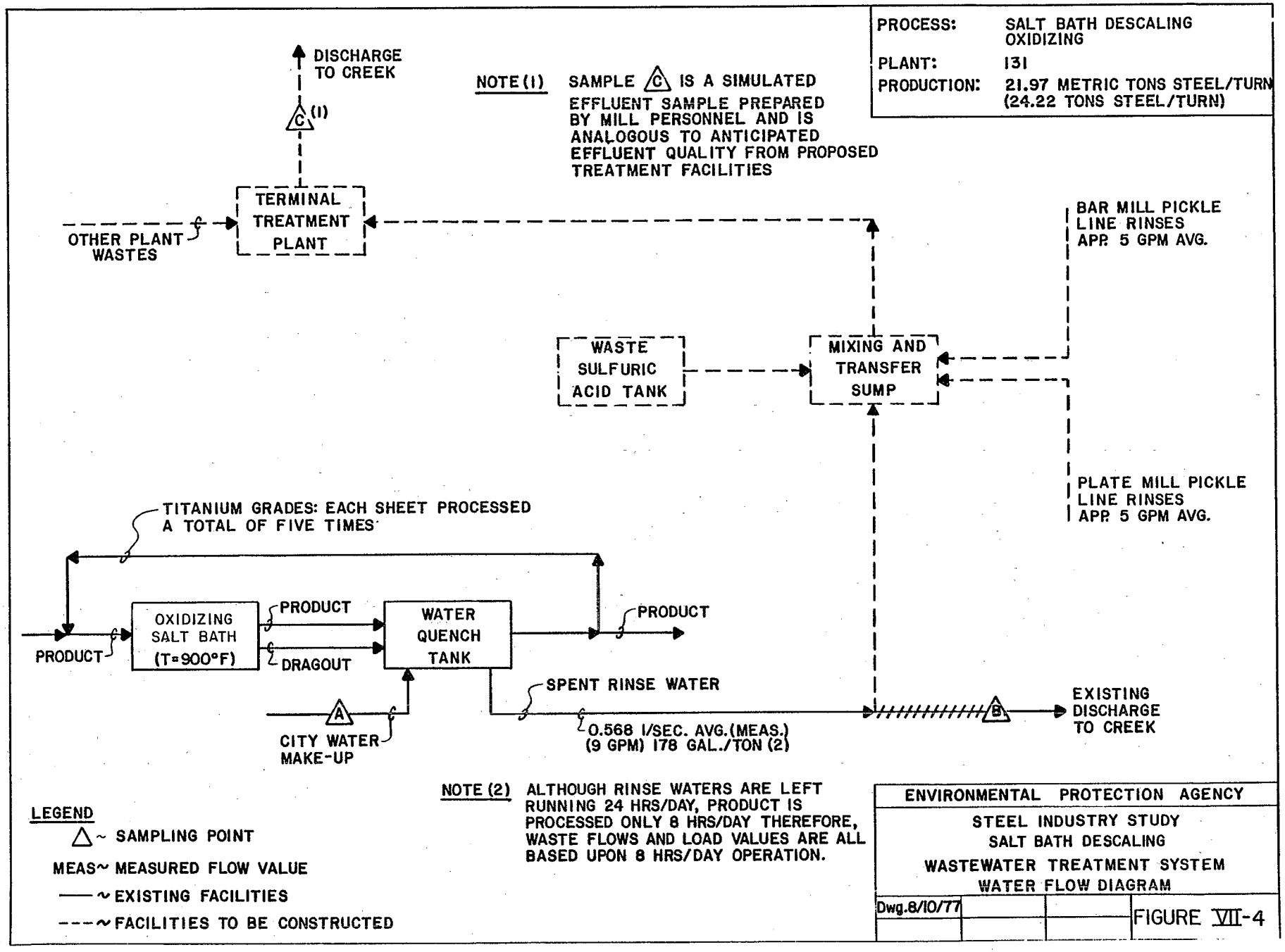
PROCESS: SALT BATH DESCALING OXIDIZING
PLANT: 131
PRODUCTION: 21.97 METRIC TONS STEEL/TURN (24.22 TONS STEEL/TURN)
DISCHARGE TO CREEK
C (1)
NOTE (1) SAMPLE C IS A SIMULATED EFFLUENT SAMPLE PREPARED BY MILL PERSONNEL AND IS ANALOGOUS TO ANTICIPATED EFFLUENT QUALITY FROM PROPOSED TREATMENT FACILITIES
TERMINAL TREATMENT PLANT
OTHER PLANT WASTES
BAR MILL PICKLE LINE RINSES APR. 5 GPM AVG.
WASTE SULFURIC ACID TANK
MIXING AND TRANSFER SUMP
PLATE MILL PICKLE LINE RINSES APR. 5 GPM AVG.
TITANIUM GRADES: EACH SHEET PROCESSED A TOTAL OF FIVE TIMES
OXIDIZING SALT BATH (T=900°F)
PRODUCT
PRODUCT
DRAGOUT
WATER QUENCH TANK
PRODUCT
SPENT RINSE WATER
A
CITY WATER MAKE-UP
0.568 l/SEC. AVG. (MEAS.) (9 GPM) 178 GAL./TON (2)
B
EXISTING DISCHARGE TO CREEK
NOTE (2) ALTHOUGH RINSE WATERS ARE LEFT RUNNING 24 HRS/DAY, PRODUCT IS PROCESSED ONLY 8 HRS/DAY THEREFORE, WASTE FLOWS AND LOAD VALUES ARE ALL BASED UPON 8 HRS/DAY OPERATION.
LEGEND
△ ~ SAMPLING POINT
MEAS ~ MEASURED FLOW VALUE
—— ~ EXISTING FACILITIES
- - - ~ FACILITIES TO BE CONSTRUCTED
ENVIRONMENTAL PROTECTION AGENCY
STEEL INDUSTRY STUDY
SALT BATH DESCALING
WASTEWATER TREATMENT SYSTEM
WATER FLOW DIAGRAM
Dwg.8/10/77
FIGURE VII-4

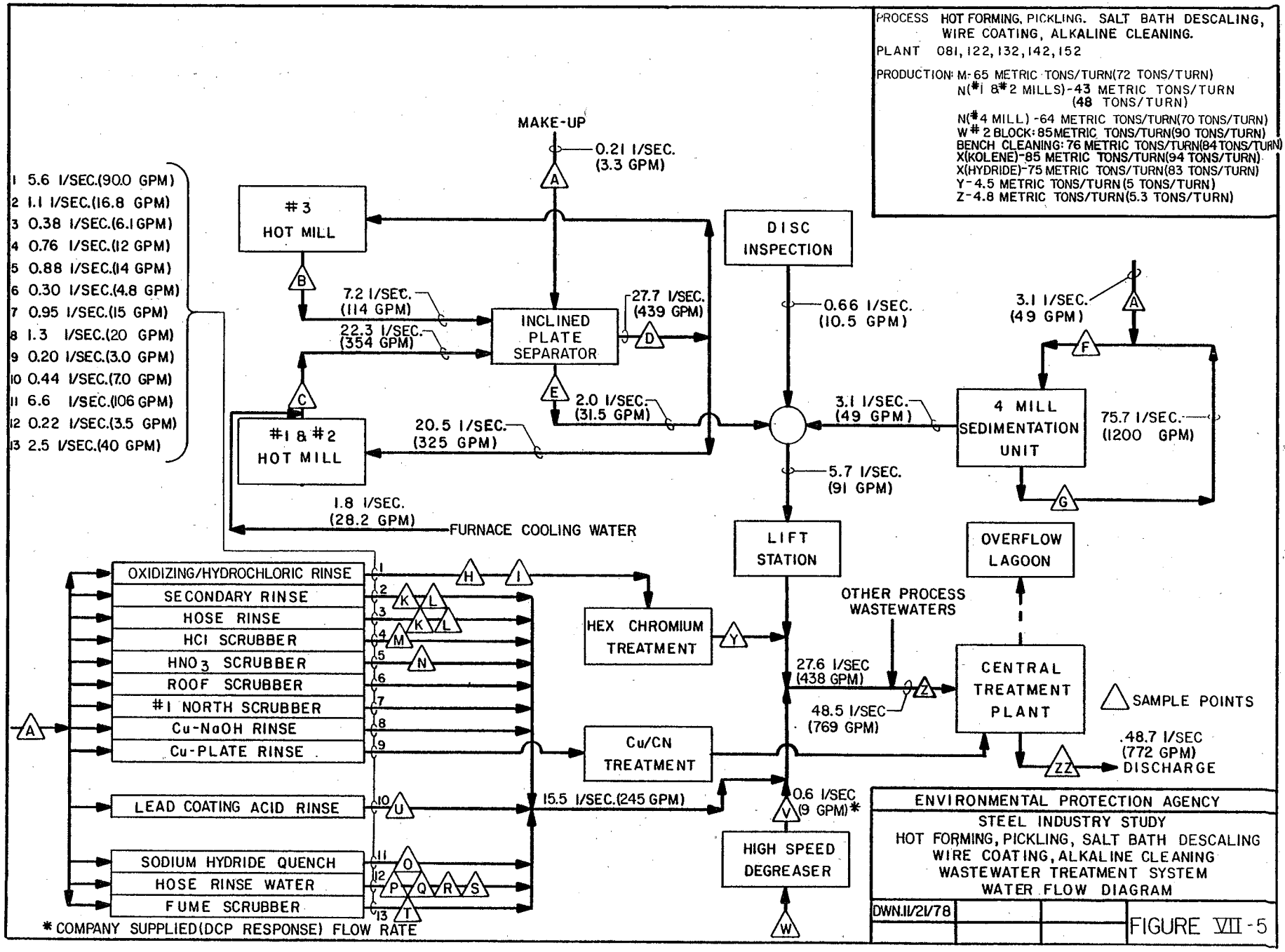
PROCESS HOT FORMING, PICKLING. SALT BATH DESCALING, WIRE COATING, ALKALINE CLEANING.
PLANT 081, 122, 132, 142, 152
PRODUCTION: M-65 METRIC TONS/TURN(72 TONS/TURN)
N(#1 & #2 MILLS)-43 METRIC TONS/TURN (48 TONS/TURN)
N(#4 MILL)-64 METRIC TONS/TURN(70 TONS/TURN)
W #2 BLOCK: 85 METRIC TONS/TURN(90 TONS/TURN)
BENCH CLEANING: 76 METRIC TONS/TURN(84 TONS/TURN)
X(KOLENE)-85 METRIC TONS/TURN(94 TONS/TURN)
X(HYDRIDE)-75 METRIC TONS/TURN(83 TONS/TURN)
Y-4.5 METRIC TONS/TURN(5 TONS/TURN)
Z-4.8 METRIC TONS/TURN(5.3 TONS/TURN)
1 5.6 l/SEC.(90.0 GPM)
2 1.1 l/SEC.(16.8 GPM)
3 0.38 l/SEC.(6.1 GPM)
4 0.76 l/SEC.(12 GPM)
5 0.88 l/SEC.(14 GPM)
6 0.30 l/SEC.(4.8 GPM)
7 0.95 l/SEC.(15 GPM)
8 1.3 l/SEC.(20 GPM)
9 0.20 l/SEC.(3.0 GPM)
10 0.44 l/SEC.(7.0 GPM)
11 6.6 l/SEC.(106 GPM)
12 0.22 l/SEC.(3.5 GPM)
13 2.5 l/SEC.(40 GPM)
MAKE-UP
0.21 l/SEC. (3.3 GPM)
#3 HOT MILL
7.2 l/SEC. (114 GPM)
22.3 l/SEC. (354 GPM)
INCLINED PLATE SEPARATOR
27.7 l/SEC. (439 GPM)
2.0 l/SEC. (31.5 GPM)
#1 & #2 HOT MILL
20.5 l/SEC. (325 GPM)
1.8 l/SEC. (28.2 GPM)
FURNACE COOLING WATER
DISC INSPECTION
0.66 l/SEC. (10.5 GPM)
3.1 l/SEC. (49 GPM)
4 MILL SEDIMENTATION UNIT
75.7 l/SEC. (1200 GPM)
5.7 l/SEC. (91 GPM)
LIFT STATION
OVERFLOW LAGOON
OTHER PROCESS WASTEWATERS
OXIDIZING/HYDROCHLORIC RINSE
SECONDARY RINSE
HOSE RINSE
HCl SCRUBBER
HNO3 SCRUBBER
ROOF SCRUBBER
#1 NORTH SCRUBBER
Cu-NaOH RINSE
Cu-PLATE RINSE
HEX CHROMIUM TREATMENT
27.6 l/SEC (438 GPM)
48.5 l/SEC (769 GPM)
CENTRAL TREATMENT PLANT
SAMPLE POINTS
Cu/CN TREATMENT
.48.7 l/SEC (772 GPM) DISCHARGE
LEAD COATING ACID RINSE
15.5 l/SEC.(245 GPM)
0.6 l/SEC (9 GPM)*
HIGH SPEED DEGREASER
SODIUM HYDRIDE QUENCH
HOSE RINSE WATER
FUME SCRUBBER
* COMPANY SUPPLIED(DCP RESPONSE) FLOW RATE
ENVIRONMENTAL PROTECTION AGENCY
STEEL INDUSTRY STUDY
HOT FORMING, PICKLING, SALT BATH DESCALING
WIRE COATING, ALKALINE CLEANING
WASTEWATER TREATMENT SYSTEM
WATER FLOW DIAGRAM
DWN.11/21/78
FIGURE VII-5

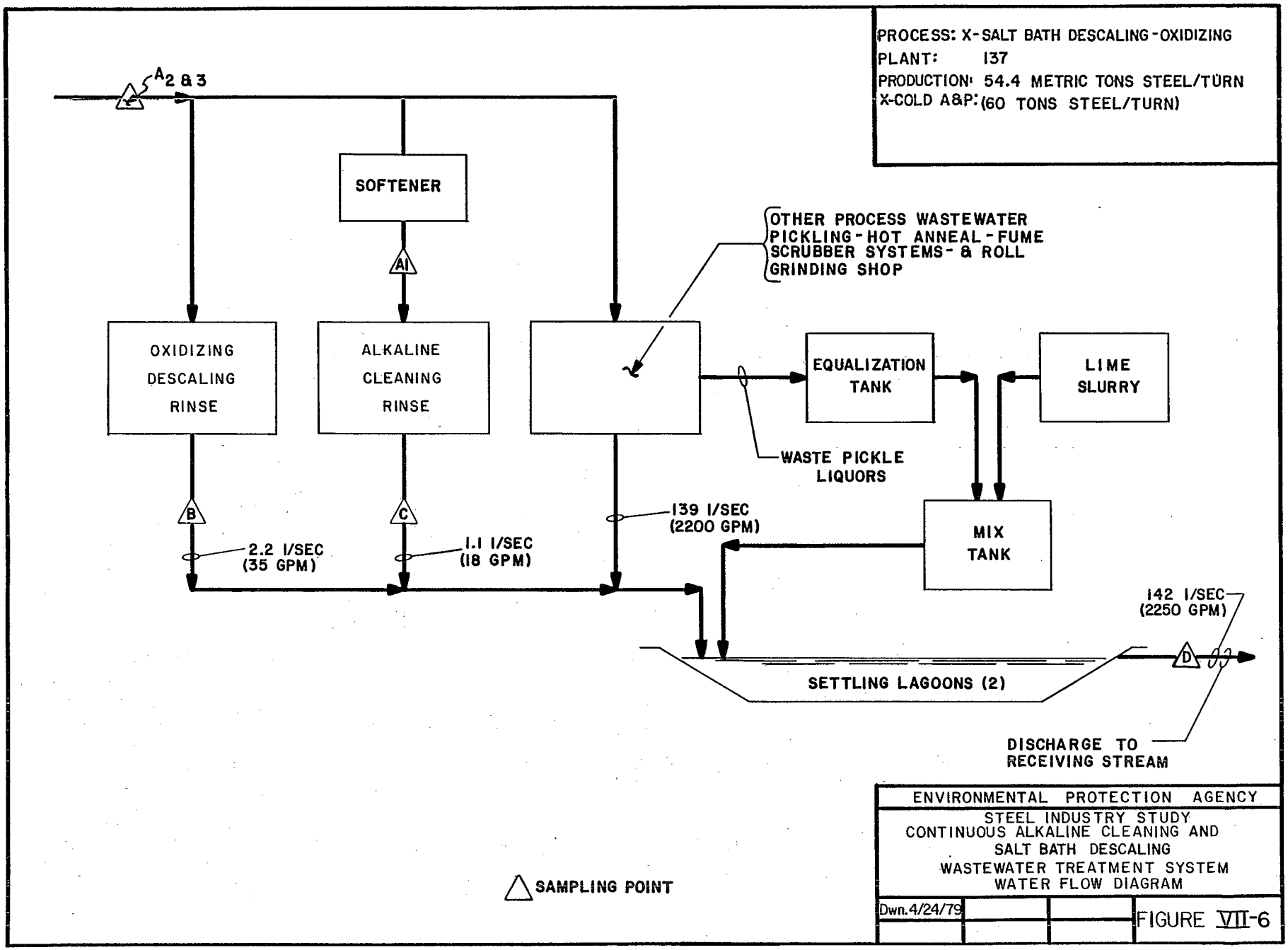
PROCESS: X-SALT BATH DESCALING-OXIDIZING
PLANT: 137
PRODUCTION: 54.4 METRIC TONS STEEL/TURN
X-COLD A&P: (60 TONS STEEL/TURN)
A2 & 3
SOFTENER
A1
OTHER PROCESS WASTEWATER
PICKLING-HOT ANNEAL-FUME
SCRUBBER SYSTEMS- & ROLL
GRINDING SHOP
OXIDIZING
DESCALING
RINSE
ALKALINE
CLEANING
RINSE
EQUALIZATION
TANK
LIME
SLURRY
WASTE PICKLE
LIQUORS
B
C
2.2 l/SEC
(35 GPM)
1.1 l/SEC
(18 GPM)
139 l/SEC
(2200 GPM)
MIX
TANK
142 l/SEC
(2250 GPM)
D
SETTLING LAGOONS (2)
DISCHARGE TO
RECEIVING STREAM
SAMPLING POINT
ENVIRONMENTAL PROTECTION AGENCY
STEEL INDUSTRY STUDY
CONTINUOUS ALKALINE CLEANING AND
SALT BATH DESCALING
WASTEWATER TREATMENT SYSTEM
WATER FLOW DIAGRAM
Dwn. 4/24/79
FIGURE VII-6

PROCESS:	SALT BATH DESCALING OXIDIZING
PLANT:	138
PRODUCTION:	23.6 METRIC TONS/TURN (26 TONS/TURN)

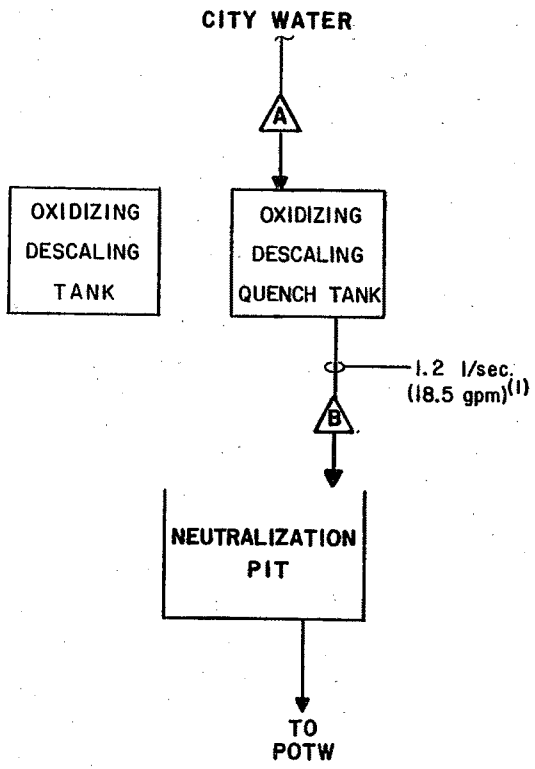

NOTE

(1) Batch discharge occurs over 8 hours.

△ SAMPLING POINT

ENVIRONMENTAL PROTECTION AGENCY

STEEL INDUSTRY STUDY
SALT BATH DESCALING
WASTEWATER TREATMENT SYSTEM
WATER FLOW DIAGRAM

DWN. 8/1/78

FIGURE VII-7

PROCESS: SALT BATH DESCALING REDUCING

PLANT: L

PRODUCTION: 19.1 metric tons steel/day (21.1 tons steel/day)

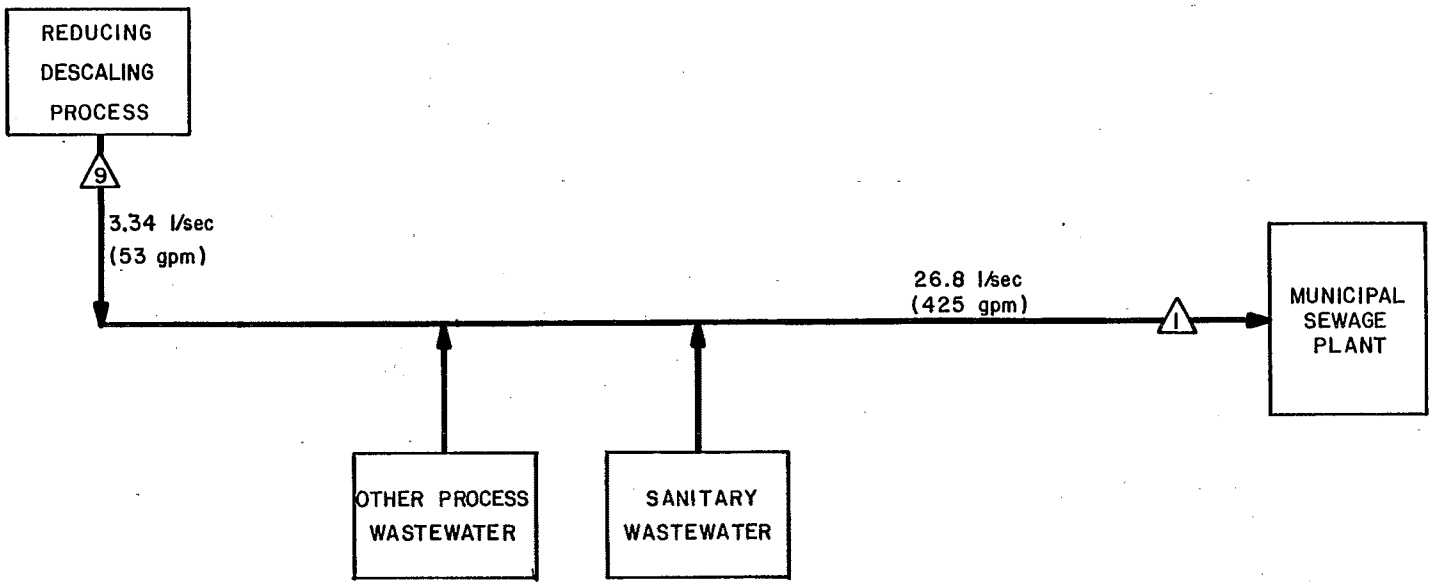

△ SAMPLING POINTS

ENVIRONMENTAL PROTECTION AGENCY

STEEL INDUSTRY STUDY
SALT BATH DESCALING
WASTEWATER TREATMENT SYSTEM
WATER FLOW DIAGRAM

Dwn. 2/26/79

FIGURE VII-8

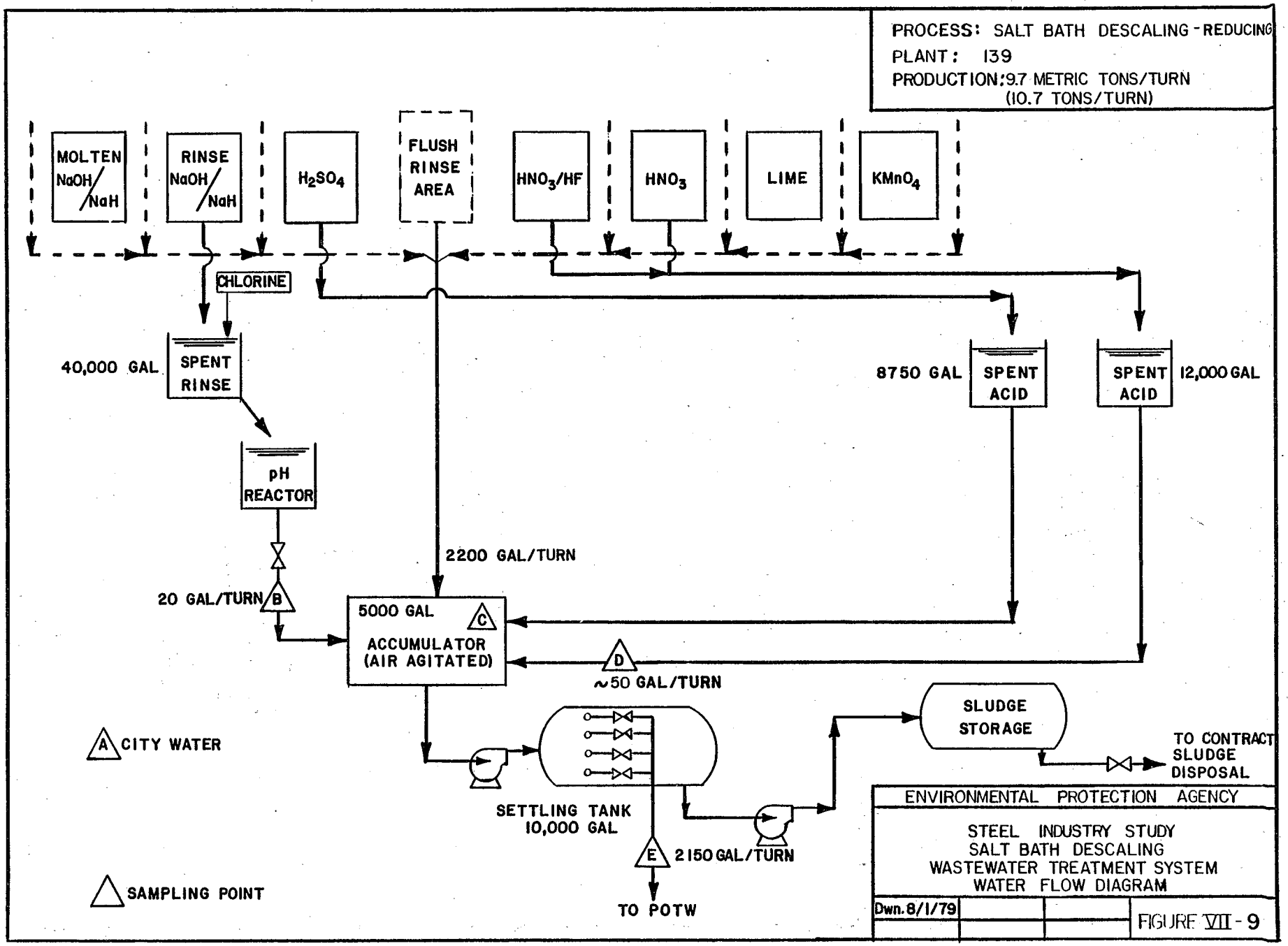
PROCESS: SALT BATH DESCALING - REDUCING
PLANT: 139
PRODUCTION: 9.7 METRIC TONS/TURN
(10.7 TONS/TURN)
MOLTEN NaOH/NaH
RINSE NaOH/NaH
H_2SO_4
FLUSH RINSE AREA
HNO_3/HF
HNO_3
LIME
$KMnO_4$
CHLORINE
40,000 GAL
SPENT RINSE
pH REACTOR
20 GAL/TURN
B
2200 GAL/TURN
5000 GAL
C
ACCUMULATOR (AIR AGITATED)
8750 GAL
SPENT ACID
SPENT ACID
12,000 GAL
D
~50 GAL/TURN
A CITY WATER
SETTLING TANK 10,000 GAL
E
2150 GAL/TURN
TO POTW
SLUDGE STORAGE
TO CONTRACT SLUDGE DISPOSAL
SAMPLING POINT
ENVIRONMENTAL PROTECTION AGENCY
STEEL INDUSTRY STUDY
SALT BATH DESCALING
WASTEWATER TREATMENT SYSTEM
WATER FLOW DIAGRAM
Dwn. 8/1/79
FIGURE VII - 9

SALT BATH DESCALING SUBCATEGORY

SECTION VIII

COST, ENERGY, AND NON-WATER QUALITY IMPACTS

Introduction

This section presents the incremental costs incurred in applying the different levels of pollution control technology to descaling operations. The analysis also describes energy requirements, non-water quality impacts, and the techniques, magnitude, and costs associated with each alternative treatment system for each subdivision.

Actual Costs Incurred by the Operations Sampled for this Study

The water pollution control costs reported by the industry are presented in Tables VIII-1 and VIII-2. These costs were updated to July 1978 dollars from current year data. Standard costs of capital and depreciation percentages were used so that these basic costs would be comparable. Also, where central treatment systems are in use, the industry often supplied total cost data for the entire treatment system. These costs were apportioned as accurately as possible to isolate costs attributable to the treatment of descaling wastewaters.

Because of the extensive use of central treatment for descaling operation, the Agency could not directly verify its model-based cost estimates for separate treatment of salt bath descaling wastewaters with cost data reported by the industry for central treatment systems. However, the Agency compared its model-based separate treatment costs with industry costs, for several central treatment systems, by summing the model-based separate treatment costs for each subcategory included in the existing central treatment systems. The results of this comparison, presented in Volume I, demonstrate that the Agency's costing methodology accurately reflects industry costs for central treatment facilities in general, and for those systems including descaling wastewaters in particular. In fact, as shown by the data presented in Volume I, the Agency's cost estimates for separate treatment for finishing operation wastewaters are likely to be higher than the costs which will actually be incurred by industry for central treatment.

Control and Treatment Technology (C&TT)

Effluent limitations and standards have been promulgated for BPT, BAT, BCT, NSPS, PSES, and PSNS. The alternative treatment systems and components are presented in Tables VIII-3 and VIII-4, and the alternative treatment technologies are illustrated in Figures VIII-1

and VIII-2 for oxidizing and reducing operations, respectively. These technologies represent treatment systems either in use or available for oxidizing and reducing salt bath descaling operations. In addition to listing the treatment methods available, these tables present the following:

1. Description
2. Implementation time
3. Land requirements

Cost, Energy, and Non-Water Quality Impacts

General Introduction

The installation of BPT, BCT, BAT, NSPS, PSES, and PSNS alternative treatment systems will require investment in additional treatment facilities and consumption of additional energy to operate these facilities. Also, air pollution, water consumption and solid waste disposal impacts associated with each level of treatment are addressed in this section. Costs and energy requirements were estimated on the basis of the alternative treatment systems developed in Sections IX through XIII.

Estimated Costs for the Installation of Pollution Control Technologies

A. Costs Required to Achieve the BPT Limitations

The BPT model costs are presented in Tables VIII-5 through VIII-10. To obtain an estimate of industry-wide costs to comply with the BPT limitations, capital cost tabulations were prepared for all descaling lines. These tabulations summarize the treatment installed at each line and present the required costs to attain the BPT limitations.

The Agency has estimated the capital costs to comply with the BPT limitations and standards for oxidizing operations to be 4.2 million dollars. Of this total, 3.8 million dollars is currently in place. The remaining 0.4 million dollars remains to be installed. The estimated annual costs for oxidizing operations are 0.5 million dollars. The estimated capital costs to comply with the BPT limitations and standards for the reducing operations are 0.8 million dollars. Presently, 0.8 million dollars worth of treatment technology is in place. The estimated annual costs for reducing operation are 0.1 million dollars.

To develop the above costs, model treatment systems were developed which are based upon average plant size and the model flow rates. Plant by plant capital cost estimates were then made by factoring the production of each plant to the model plant size by the "six-tenth" factor. This method yields cost estimates for the subcategory which are representative of actual industry costs. Cost comparisons presented in Volume I verify the

accuracy of this costing methodology. Because the DCP responses listed the treatment components already installed, costs for "in-place" components were separated from the total estimated cost.

Cost estimates were developed assuming all plants would install separate treatment systems. However, as noted earlier, wastewaters from most descaling operations are treated in central treatment systems. Central treatment reduces costs because of economies of scale, and because duplicate equipment components are not needed. Hence, actual cost requirements for descaling operations are expected to be less than the estimates presented above.

B. Costs Required to Achieve the BAT Limitations

The Agency considered two BAT alternative treatment systems for salt bath descaling operations. These alternatives are set out in Section X and the respective model plant costs are presented in Tables VIII-11 to VIII-16. The estimated industry-wide investment and annual costs for each alternative BAT treatment system follow:

Oxidizing Operations

BAT Alternative	Investment Costs($) In-Place	Investment Costs($) Required	Annual Costs($)
1	8,370	717,320	95,370
2	0	27,076,560	3,942,400

Reducing Operations

BAT Alternative	Investment Costs($) In-Place	Investment Costs($) Required	Annual Costs($)
1	0	200,880	26,520
2	0	8,158,280	1,107,720

C. Cost Required to Achieve the BCT Limitations

Since the BCT limitations are the same as the BPT limitations for conventional pollutants, no additional costs will be incurred to achieve compliance with the BCT limitations beyond those required for compliance with BPT.

D. Costs Required to Achieve NSPS and PSNS

The Agency considered three alternative treatment systems for salt bath descaling facilities which are constructed after the proposal of New Source Performance Standards. The NSPS and PSNS alternative treatment systems are similar to the BPT/BAT treatment systems. The NSPS and PSNS alternative treatment

systems are discussed in Sections XII and XIII, and treatment model costs for those alternatives are presented in Tables VIII-11 through VIII-16. Industry-wide NSPS and PSNS costs were not developed as part of this study. New sources are projected only as a part of the economic impact analysis.

E. Costs Required to Achieve the Pretreatment Standards

Pretreatment standards apply to those existing and new sources which discharge to POTW systems. Refer to Section XIII for additional information pertaining to pretreatment standards. The costs for the pretreatment models are presented in Tables VIII-11 through VIII-16. Industry-wide costs for PSES are summarized below:

Oxidizing Operations

PSES Alternative	Investment Costs($) In-Place	Investment Costs($) Required	Annual Costs($)
1	158,100	923,500	160,500
2	0	234,530	30,650
3	0	8,898,540	1,291,370

Reducing Operations

PSES Alternative	Investment Costs($) In-Place	Investment Costs($) Required	Annual Costs($)
1	35,800	77,500	16,100
2	0	15,420	2,030
3	0	615,910	83,810

Energy Impacts

Moderate amounts of energy are required by the alternative levels of treatment for descaling operations. The major energy expenditures occur at the BPT treatment level. BAT Alternative 1 requires relatively minor additional energy, while BAT Alternative 2 requires a greater amount of electrical energy. The Agency considered this factor in selecting the BAT model treatment system (see Section X).

A. Energy Impacts at BPT

The estimated energy requirements are based upon the assumption that all descaling operations install treatment systems similar to the treatment model, with flows similar to those of the model. On this basis, the annual energy usage for the BPT model treatment system for all oxidizing operations is 3.33 million kilowatt-hours of electricity. The energy usage for BPT

treatment components for all reducing operations is 0.46 million kilowatt-hours of electricity. The total energy needs to comply with the BPT limtations total 3.79 million kilowatt-hours. This represents less than 0.01% of the 57 billion kilowatt-hours of electricity used by the steel industry in 1978.

B. Energy Impacts at BAT

The estimated energy requirements at the BAT level of treatment are based upon the same assumptions noted above for BPT. Following are the estimated energy requirements to upgrade the BPT model treatment system to the two BAT alternative treatment systems, and their relationship to the 1978 industry power usage:

BAT Alternative	kwh/year	% of Industry Usage
Oxidizing Operations		
1	176,000	0.00031
2	2,180,000	0.049
Reducing Operations		
1	32,000	0.000056
2	3,944,000	0.0069

C. Energy Impacts at BCT

No additional energy is required to achieve the BCT limitations, since the BPT and BCT limitations are the same.

D. Energy Impacts at NSPS, PSES, and PSNS

Following are the energy requirements for the NSPS, PSES, and PSNS model treatment systems:

Treatment Model	Model Energy Requirements (kwh/year) NSPS-1 PSNS-1	NSPS-2 PSNS-2	NSPS-3 PNSN-3
Oxidizing Operations			
Batch			
Sheet/Plate	188,000	200,000	1,676,000
Rod/Wire/Bar	196,000	208,000	1,916,000
Pipe & Tube	200,000	212,000	2,292,000
Continuous	200,000	208,000	1,828,000
Reducing Operations			
Batch	76,000	80,000	772,000
Continuous	76,000	84,000	656,000

Only model-based energy consumption is presented for NSPS and PSNS, since projections of capacity additions were not made as part of this study. The energy requirements for PSES are listed below:

Treatment Model	
Oxidizing Operations	**kwh/year**
PSES -1	396,000
PSES -2	20,000
PSES -3	3,348,000
Reducing Operations	
PSES - 1	76,000
PSES - 1	4,000
PSES - 3	696,000

The energy requirements for PSES -2 and PSES-3 are incremental over PSES -1 energy requirements.

Non-water Quality Impacts

In general, the non-water quality impacts associated with compliance with the limitations and standards are minimal. The three impacts evaluated were air pollution, solid waste disposal, and water consumption.

A. Air Pollution

Sulfur dioxide is used to reduce hexavalent chromium in the BPT and NSPS treatment systems for oxidizing operations. Excess levels may be discharged to the atmosphere during treatment. The

possible sulfur dioxide emissions are not considered significant, since only minor emissions occur from the systems.

B. Solid Waste Disposal

The treatment steps included in the BPT and BAT treatment systems will remove a significant quantity of the suspended solids contained in descaling wastewaters. Following is a summary of solid waste generation rates for all descaling operations at the BPT, BAT, BCT and PSES levels of treatment.

Treatment Level	Solid Waste Generation Salt Bath Descaling Subcategory (Tons/Year)
Oxidizing Operations	
BPT/BCT	7,240
BAT -1	0
BAT -2	0
PSES -1	860
PSES -2	0
PSES -3	0
Reducing Operations	
BPT/BCT	760
BAT -1	0
BAT -2	0
PSES -1	160
PSES -2	8
PSES -3	

As shown above, most suspended solids are generated by the BPT model treatment system, while the BAT alternative treatment systems generate relatively minor additional amounts of solid wastes. Most of the solid wastes require proper disposal. The vast majority of these wastes are generated at the BPT level of treatment and are being disposed of at the present time. The Agency believes that the solid waste impacts associated with this regulation are reasonable and justified. A more detailed discusssion of this issue is presented in Volume I.

Following are the estimated amounts of solid wastes generated by NSPS and PSNS alternative treatment systems:

Treatment Level	Solid Waste Generation Salt Bath Descaling Subcategory (Tons/Year)		
	NSPS -1	NSPS -2	NSPS -3
Oxidizing Operations	PSNS -1	PSNS -2	PSNS -3
Batch - Sheet/Plate	380	380	380
Rod/Wire/Bar	440	440	440
Pipe & Tube	540	540	540
Continuous	420	420	420
Reducing Operations			
Batch	160	160	160
Continuous	60	60	60

The solid wastes generated at the NSPS and PSNS levels are of the same nature as those generated at BPT and BAT levels of treatment and present the same disposal requirements as those presented for BPT and BAT.

C. Water Consumption

Water will not be consumed at salt bath descaling operations as a result of compliance with the BPT, BAT, NSPS, PSES, and PSNS limitations and standards. Recycling or cooling of the wastewaters is not required to comply with these limitations and standards.

Summary of Non-Water Quality Impacts

The Agency concludes that the effluent reduction benefits described below for the salt bath descaling subcategory justify the adverse impacts associated with energy consumption, air pollution, solid waste disposal, or water consumption as discussed above:

	Direct Discharges (tons/yr)	
Oxidizing	Raw Waste	BPT/BAT/BCT
Flow, MGD	0.8	0.8
TSS	319	15.2
Toxic Organics	<0.05	<0.05
Toxic Metals	158	0.6
Other Pollutants	0	0
Reducing		
Flow, MGD	0.2	0.2
TSS	110	6.2
Toxic Organics	0	0
Toxic Metals	2.7	0.2
Other Pollutants	3.3	0.3

	Indirect Discharges (tons/yr)	
Oxidizing	Raw Waste	PSES
Flow, MGD	0.1	0.1
TSS	51.3	2.4
Toxic Organics	<0.05	<0.05
Toxic Metals	25.5	0.1
Other Pollutants	0	0
Reducing		
Flow, MGD	0.04	0.04
TSS	19.3	1.1
Toxic Organics	0	0
Toxic Metals	0.5	<0.05
Other Pollutants	0.6	<0.05

The Agency also concludes that the effluent reduction benefits associated with compliance with new source standards (NSPS, PSNS) outweigh the adverse energy and non-water quality environmental impacts.

TABLE VIII-1

REPORTED EFFLUENT TREATMENT COSTS
SALT BATH DESCALING - OXIDIZING

Reference No.	424-01*	176-01*	440A-01	776H	684D*	432*
Plant Code	C & 131	132	L & 138	N/A	Q	137
C&TT	VF,CR,FLP,NL,NW, NA,CL,SL,T	CR,PSP,NA,CO,CLA, EB,FLP,NC,NW,CL, SL,SSP,T,SS,CY,	NW,SL	NW,CT,T	None	NW,NL,SL
Process Type	Batch	Batch	Batch	Batch	Continuous	Continuous
Product	Plate	Rod,Wire	Bar,Rod	Sheet	Strip	Sheet
Initial Investment	1,290,000	244,145	None	175,221	None	14,551
Annual Costs						
Cost of Capital	55,470	10,498	-	7,534	-	626
Depreciation	129,000	24,415	-	17,522	-	1,455
Operation & Maintenance	101,780	12,446	-	10,648	-	991
Energy & Power	18,453	16,154	-	2,124	-	-
Miscellaneous	-	-	227	-	-	-
TOTAL	304,703	63,513	227	37,828	-	3,072
$/Ton	41.9	1.37	0.010	29.10	-	0.045
$/1000 Gal. Trt.	235.4	3.90	0.029	2.07	-	0.016

(1) For C&TT Code Definitions, see Table VII-1.

* : Costs attributable to this subcategory.

TABLE VIII-2

REPORTED EFFLUENT TREATMENT COSTS
SALT BATH DESCALING - REDUCING

Reference No.	440A*	456N-01*	176-01*
Plant Code	L	139	132
C&TT Code(1)	NW,SL	CLA,NA,SL	CR,PSP,NA,CO,CLA, EB,FLP,NC,NW, CL,SL,SSP,T,SS,CY
Process Type	Batch	Batch	Batch
Product	NA	Bar, Billet	Bar, Rod, Wire
Initial Investment	None	8,000	20,067
Annual Costs			
Costs of Capital	-	344	863
Depreciation	-	800	2,007
Operation & Maintenance	-	9,730	2,550
Energy & Power	-	38.6	2,368
Miscellaneous	464	-	-
TOTAL	464	10,913	7,788
$/Ton	0.028	1.09	0.340
$/1000 Gal. Trt.	0.0232	605.6	5.90

(1) For C&TT Code Definitions, see Table VII-1.
* : Costs attributable to this subcategory.
NA: Not Available.

TABLE VIII-3

CONTROL AND TREATMENT TECHNOLOGIES
SALT BATH DESCALING - OXIDIZING

C & TT Step	Description	Implementation Time (Months)	Land Usage (ft^2)
A	ACID ADDITION - process wastewater is treated by additions of acid in the mixing tank to lower pH to the 2-4 range.	6	625
B	SULFUR DIOXIDE ADDITION - hexavalent chromium is reduced to the trivalent state by the addition of sulfur dioxide. This step is used in conjuction with Step A.	Included in Step A	No additional land required
C	OIL SKIMMER - effluent from Step B is treated by skimming in a pit to remove floating oil and solids.	3	No additional land required
D	LIME NEUTRALIZATION - lime is added in a mixing tank to raise the pH to the 6-9 range.	6	625
E	FLOCCULATION WITH POLYMER - polymer is added to the same mixing tank used in Step D to aid coagulation and flocculation of solids.	Included in Step D	No additional land required
F	CLARIFICATION - the effluent from Step E enter a flocculation clarifier where sedimentation of flocculated solids occurs.	15-18	625 (Batch, Sheet/Plate), 265 (Batch, Rod/Wire), 410 (Batch, Pipe and Tube), 330 (Continuous)
G	VACUUM FILTRATION - used to dewater the settled solids from Step F.	15-18	225
H	FILTRATION - the effluent from Step F is passed through a mixed - media filtration system to further reduce suspended solids present in the wastewater.	15-18	625

Table VIII-3
CONTROL AND TREATMENT TECHNOLOGIES
SALT BATH DESCALING - OXIDIZING
PAGE 2

C & TT Step	Description	Implementation Time (Months)	Land Usage (ft^2)
I	VAPOR COMPRESSION DISTILLATION - a vapor decompression distillation system is used to concentrate dissolved solids into a slurry consistency.	18	2500
J	RECYCLE - the distillate from Step K is recycled to the oxidizing salt bath.	12-14	625

TABLE VIII-4

CONTROL AND TREATMENT TECHNOLOGIES
SALT BATH DESCALING - REDUCING

C & TT Step	Description	Implementation Time (Months)	Land Usage (ft^2)
A	TWO-STAGE CHLORINATION - chloride or other oxidizing agents are added to the reducing salt bath wastewater to oxidize the cyanide. Acid is then added to the effluent from the chloride addition mixing tank to reduce the pH within the 6-9 range.	6	1250
B	POLYMER ADDITION - polymer is added into the same mixing tank used for acid addition to enhance coagulation and flocculation of suspended solids.	Included in Step A	No additional space required
C	CLARIFICATION - the effluent from Step B enters a flocculation clarifer where sedimentation of flocculated solids occurs.	15-18	300 (Continuous) 205 (Batch)
D	VACUUM FILTRATION - used to dewater the settled solids in Step C.	15-18	225
E	FILTRATION - the effluent from Step C is passed through a mixed-media filtration system to further reduce suspended solids present in the wastewater.	15-18	625
F	VAPOR COMPRESSION DISTILLATION - a vapor decompression distillation system is used to concentrate dissolved solids to a slurry consistency.	18	2500
G	RECYCLE - the distillate from Step F is recycled to the reducing salt bath.	15-18	625

TABLE VIII-5

BPT TREATMENT MODEL COSTS: BASIS 7/1/78 DOLLARS

Subcategory: Salt Bath Descaling
Subdivision: Oxidizing
: Batch Sheet/Plate

Model Size-TPD : 60
Oper. Days/Year: 260
Turns/Day : 2

C&TT Step	A	B	C	D	E	F	G	Total
Investment ($ x 10^{-3})	44.0	43.7	6.3	33.2	20.0	90.3	126.0	363.5
Annual Costs ($ x 10^{-3})								
Capital	4.0	3.9	0.6	3.0	1.8	8.1	11.3	32.7
Operation & Maintenance	1.5	1.5	0.2	1.2	0.7	3.2	4.4	12.7
Land	0.1			0.1		0.1	0.1	0.4
Sludge Disposal							1.9	1.9
Hazardous Waste Disposal								
Oil Disposal								
Energy & Power	0.2	0.2	0.1	0.4	0.1	0.2	3.5	4.7
Steam								
Waste Acid								
Crystal Disposal								
Chemical	0.3	0.5		0.2	0.5			1.5
TOTAL	6.1	6.1	0.9	4.9	3.1	11.6	21.2	53.9
Credits								
Scale								
Sinter								
Oil								
Acid Recovery								
TOTAL CREDITS								
NET TOTAL	6.1	6.1	0.9	4.9	3.1	11.6	21.2	53.9

KEY TO C&TT STEPS

A: Acid Addition
B: Sulfur Dioxide Addition
C: Surface Skimming
D: Neutralization with Lime
E: Flocculation with Polymer
F: Clarification
G: Vacuum Filtration

TABLE VIII-6

BPT TREATMENT MODEL COSTS: BASIS 7/1/78 DOLLARS

Subcategory: Salt Bath Descaling
Subdivision: Oxidizing
: Batch Rod/Wire

Model Size-TPD : 115
Oper. Days/Year: 260
Turns/Day : 2

C&TT Step	A	B	C	D	E	F	G	Total
Investment ($ x 10^{-3})	47.5	47.2	6.8	35.9	20.0	97.5	132.2	387.1
Annual Costs ($ x 10^{-3})								
Capital	4.3	4.2	0.6	3.2	1.8	8.8	11.9	34.8
Operation & Maintenance	1.7	1.7	0.2	1.3	0.7	3.4	4.6	13.6
Land	0.1			0.1		0.1	0.1	0.4
Sludge Disposal							2.2	2.2
Hazardous Waste Disposal								
Oil Disposal								
Energy & Power	0.2	0.2	0.1	0.5	0.1	0.3	3.5	4.9
Steam								
Waste Acid								
Crystal Disposal								
Chemical	0.3	0.5		0.2	0.5			1.5
TOTAL	6.6	6.6	0.9	5.3	3.1	12.6	22.3	57.4
Credits								
Scale								
Sinter								
Oil								
Acid Recovery								
TOTAL CREDITS								
NET TOTAL	6.6	6.6	0.9	5.3	3.1	12.6	22.3	57.4

KEY TO C&TT STEPS

A: Acid Addition
B: Sulfur Dioxide Addition
C: Surface Skimming
D: Neutralization with Lime
E: Flocculation with Polymer
F: Clarification
G: Vacuum Filtration

TABLE VIII-7

BPT TREATMENT MODEL COSTS: BASIS 7/1/78 DOLLARS

Subcategory: Salt Bath Descaling
Subdivision: Oxidizing
: Batch Pipe & Tube

Model Size-TPD : 35
Oper. Days/Year: 260
Turns/Day : 2

C&TT Step	A	B	C	D	E	F	G	Total
Investment ($ x 10^{-3})	54.1	51.3	7.8	40.8	20.0	110.9	149.7	434.6
Annual Costs ($ x 10^{-3})								
Capital	4.9	4.6	0.7	3.7	1.8	10.0	13.5	39.2
Operation & Maintenance	1.9	1.8	0.3	1.4	0.7	3.9	5.2	15.2
Land	0.1			0.1		0.1	0.1	0.4
Sludge Disposal							2.7	2.7
Hazardous Waste Disposal								
Oil Disposal								
Energy & Power	0.2	0.2	0.1	0.5	0.2	0.3	3.5	5.0
Steam								
Waste Acid								
Crystal Disposal								
Chemical	0.4	0.6		0.3	0.5			1.8
TOTAL	7.5	7.2	1.1	6.0	3.2	14.3	25.0	64.3
Credits								
Scale								
Sinter								
Oil								
Acid Recovery								
TOTAL CREDITS								
NET TOTAL	7.5	7.2	1.1	6.0	3.2	14.3	25.0	64.3

KEY TO C&TT STEPS

A: Acid Addition
B: Sulfur Dioxide Addition
C: Surface Skimming
D: Neutralization with Lime
E: Flocculation with Polymer
F: Clarification
G: Vacuum Filtration

TABLE VIII-8

BPT TREATMENT MODEL COSTS: BASIS 7/1/78 DOLLARS

Subcategory: Salt Bath Descaling
Subdivision: Oxidizing
: Continuous

Model Size-TPD : 140
Oper. Days/Year: 260
Turns/Day : 2

C&TT Step	A	B	C	D	E	F	G	Total
Investment ($ x 10^{-3})	46.4	46.0	6.6	35.0	20.0	95.1	126.0	375.1
Annual Costs ($ x 10^{-3})								
Capital	4.2	4.1	0.6	3.1	1.8	8.6	11.3	33.7
Operation & Maintenance	1.6	1.6	0.2	1.2	0.7	3.3	4.4	13.0
Land	0.1			0.1		0.1	0.1	0.4
Sludge Disposal							2.1	2.1
Hazardous Waste Disposal								
Oil Disposal								
Energy & Power	0.2	0.2	0.1	0.5	0.2	0.3	3.5	5.0
Steam								
Waste Acid								
Crystal Disposal								
Chemical	0.3	0.5		0.2	0.5			1.5
TOTAL	6.4	6.4	0.9	5.1	3.2	12.3	21.4	55.7
Credits								
Scale								
Sinter								
Oil								
Acid Recovery								
TOTAL CREDITS								
NET TOTAL	6.4	6.4	0.9	5.1	3.2	12.3	21.4	55.7

KEY TO C&TT STEPS

A: Acid Addition
B: Sulfur Dioxide Addition
C: Surface Skimming
D: Neutralization with Lime
E: Flocculation with Polymer
F: Clarification
G: Vacuum Filtration

TABLE VIII-9

BPT TREATMENT MODEL COSTS: BASIS 7/1/78 DOLLARS

Subcategory: Salt Bath Descaling
Subdivision: Reducing
: Batch

Model Size-TPD : 130
Oper. Days/Year: 260
Turns/Day : 3

C&TT Step	A	B	C	D	Total
Investment ($ x 10^{-3})	91.8	20.0	81.1	97.8	290.7
Annual Costs ($ x 10^{-3})					
Capital	8.3	1.8	7.3	8.8	26.2
Operation & Maintenance	3.2	0.7	2.8	3.4	10.1
Land	0.1	0.1	0.1	0.1	0.4
Sludge Disposal				0.8	0.8
Hazardous Waste Disposal					
Oil Disposal					
Energy & Power	0.2	0.1	0.2	1.4	1.9
Steam					
Waste Acid					
Crystal Disposal					
Chemical	1.6	0.5			2.1
TOTAL	13.4	3.2	10.4	14.5	41.5
Credits					
Scale					
Sinter					
Oil					
Acid Recovery					
TOTAL CREDITS					
NET TOTAL	13.4	3.2	10.4	14.5	41.5

KEY TO C&TT STEPS

A: 2 Stage Chlorination
B: Flocculation with Polymer
C: Clarification
D: Vacuum Filtration

TABLE VIII-10

BPT TREATMENT MODEL COSTS: BASIS 7/1/78 DOLLARS

Subcategory: Salt Bath Descaling
Subdivision: Reducing
: Continuous

Model Size-TPD : 20
Oper. Days/Year: 260
Turns/Day : 3

C&TT Step	A	B	C	D	Total
Investment ($ x 10^{-3})	84.0	20.0	74.2	175.5	353.7
Annual Costs ($ x 10^{-3})					
Capital	7.6	1.8	6.7	15.8	31.9
Operation & Maintenance	2.9	0.7	2.6	6.1	12.3
Land	0.1	0.1	0.1	0.1	0.4
Sludge Disposal				0.3	0.3
Hazardous Waste Disposal					
Oil Disposal					
Energy & Power	0.1	0.2	0.2	1.4	1.9
Steam					
Waste Acid					
Crystal Disposal					
Chemical	1.5	0.5			2.0
TOTAL	12.2	3.3	9.6	23.7	48.8
Credits					
Scale					
Sinter					
Oil					
Acid Recovery					
TOTAL CREDITS					
NET TOTAL	12.2	3.3	9.6	23.7	48.8

KEY TO C&TT STEPS

A: 2 Stage Chlorination
B: Flocculation with Polymer
C: Clarification
D: Vacuum Filtration

TABLE VIII-11

BAT/PSES/PSNS/NSPS TREATMENT MODEL COSTS: BASIS 7/1/78 DOLLARS

Subcategory: Salt Bath Descaling
Subdivision: Oxidizing
: Batch Sheet/Plate

Model Size - TPD: 60
Oper. Days/Year : 260
Turns/Day : 2

C&TT Step	Total BPT	BAT Alternative 1		BAT Alternative 2		
		I	Total	J	K	Total
Investment ($ x 10^{-3})	363.5	50.9	50.9	1,958.7	25.5	1,984.2
Annual Costs ($ x 10^{-3})						
Capital	32.7	4.6	4.6	176.1	2.3	178.4
Operation & Maintenance	12.7	1.8	1.8	68.6	0.9	69.5
Land	0.4	0.1	0.1	0.1	0.1	0.2
Sludge Disposal	1.9					
Hazardous Waste Disposal						
Oil Disposal						
Energy & Power	4.7	0.3	0.3	37.2		37.2
Steam						
Waste Acid						
Crystal Disposal						
Chemical	1.5					
TOTAL	53.9	6.8	6.8	282.0	3.3	285.3
Credits						
Scale						
Sinter						
Oil						
Acid Recovery						
TOTAL CREDITS						
NET TOTAL	53.9	6.8	6.8	282.0	3.3	285.3

KEY TO TREATMENT ALTERNATIVES

PSES-1, PSNS-1, NSPS-1 = BPT
PSES-2, PSNS-2, NSPS-2 = BPT + BAT-1
PSES-3, PSNS-3, NSPS-3 = BPT + BAT-2

KEY TO C&TT STEPS

I: Pressure Filtration
J: Vapor Compression Distillation
K: Recycle

TABLE VIII-12

BAT/PSES/PSNS/NSPS TREATMENT MODEL COSTS: BASIS 7/1/78 DOLLARS

Subcategory: Salt Bath Descaling
Subdivision: Oxidizing
: Batch Rod/Wire

Model Size - TPD: 115
Oper. Days/Year : 260
Turns/Day : 2

C&TT Step	Total BPT	BAT Alternative 1		BAT Alternative 2		
		I	Total	J	K	Total
Investment ($ x 10^{-3})	387.1	54.9	54.9	2,016.0	25.5	2,041.5
Annual Costs ($ x 10^{-3})						
Capital	34.8	4.9	4.9	181.2	2.3	183.5
Operation & Maintenance	13.6	1.9	1.9	70.6	0.9	71.5
Land	0.4	0.1	0.1	0.1	0.1	0.2
Sludge Disposal	2.2					
Hazardous Waste Disposal						
Oil Disposal						
Energy & Power	4.9	0.3	0.3	43.0		43.0
Steam						
Waste Acid						
Crystal Disposal						
Chemical	1.5					
TOTAL	57.4	7.2	7.2	294.9	3.3	298.2
Credits						
Scale						
Sinter						
Oil						
Acid Recovery						
TOTAL CREDITS						
NET TOTAL	57.4	7.2	7.2	294.9	3.3	298.2

KEY TO TREATMENT ALTERNATIVES

PSES-1, PSNS-1, NSPS-1 = BPT
PSES-2, PSNS-2, NSPS-2 = BPT + BAT-1
PSES-3, PSNS-3, NSPS-3 = BPT + BAT-2

KEY TO C&TT STEPS

I: Pressure Filtration
J: Vapor Compression Distillation
K: Recycle

TABLE VIII-13

BAT/PSES/PSNS/NSPS TREATMENT MODEL COSTS: BASIS 7/1/78 DOLLARS

Subcategory: Salt Bath Descaling
Subdivision: Oxidizing
: Batch Pipe & Tube

Model Size - TPD: 35
Oper. Days/Year : 260
Turns/Day : 2

C&TT Step	Total BPT	BAT Alternative 1		BAT Alternative 2		
		I	Total	J	K	Total
Investment ($ x 10^{-3})	434.6	62.5	62.5	2,252.1	25.5	2,277.6
Annual Costs ($ x 10^{-3})						
Capital	39.2	5.6	5.6	202.5	2.3	204.8
Operation & Maintenance	15.2	2.2	2.2	78.8	0.9	79.7
Land	0.4	0.1	0.1	0.1	0.1	0.2
Sludge Disposal	2.7					
Hazardous Waste Disposal						
Oil Disposal						
Energy & Power	5.0	0.3	0.3	52.3		52.3
Steam						
Waste Acid						
Crystal Disposal						
Chemical	1.8					
TOTAL	64.3	8.2	8.2	333.7	3.3	337.0
Credits						
Scale						
Sinter						
Oil						
Acid Recovery						
TOTAL CREDITS						
NET TOTAL	64.3	8.2	8.2	333.7	3.3	337.0

KEY TO TREATMENT ALTERNATIVES

PSES-1, PSNS-1, NSPS-1 = BPT
PSES-2, PSNS-2, NSPS-2 = BPT + BAT-1
PSES-3, PSNS-3, NSPS-3 = BPT + BAT-2

KEY TO C&TT STEPS

I: Pressure Filtration
J: Vapor Compression Distillation
K: Recycle

TABLE VIII-14

BAT/PSES/PSNS/NSPS TREATMENT MODEL COSTS: BASIS 7/1/78 DOLLARS

Subcategory: Salt Bath Descaling
Subdivision: Oxidizing
: Continuous

Model Size - TPD: 140
Oper. Days/Year : 260
Turns/Day : 3

C&TT Step	Total BPT	BAT Alternative 1		BAT Alternative 2		
		I	Total	J	K	Total
Investment ($ x 10^{-3})	375.1	53.6	53.6	2,016.0	25.5	2,041.5
Annual Costs ($ x 10^{-3})						
Capital	33.7	4.8	4.8	181.2	2.3	183.5
Operation & Maintenance	13.0	1.9	1.9	70.6	0.9	71.5
Land	0.4	0.1	0.1	0.1	0.1	0.2
Sludge Disposal	2.1					
Hazardous Waste Disposal						
Oil Disposal						
Energy & Power	5.0	0.2	0.2	40.7		40.7
Steam						
Waste Acid						
Crystal Disposal						
Chemical	1.5					
TOTAL	55.7	7.0	7.0	292.6	3.3	295.9
Credits						
Scale						
Sinter						
Oil						
Acid Recovery						
TOTAL CREDITS						
NET TOTAL	55.7	7.0	7.0	292.6	3.3	295.9

KEY TO TREATMENT ALTERNATIVES

PSES-1, PSNS-1, NSPS-1 = BPT
PSES-2, PSNS-2, NSPS-2 = BPT + BAT-1
PSES-3, PSNS-3, NSPS-3 = BPT + BAT-2

KEY TO C&TT STEPS

I: Pressure Filtration
J: Vapor Compression Distillation
K: Recycle

TABLE VIII-15

BAT/PSES/PSNS/NSPS TREATMENT MODEL COSTS: BASIS 7/1/78 DOLLARS

Subcategory: Salt Bath Descaling
Subdivision: Reducing
: Batch

Model Size - TPD: 130
Oper. Days/Year : 260
Turns/Day : 3

C&TT Step	Total BPT	BAT Alternative 1		BAT Alternative 2		
		G	Total	H	I	Total
Investment ($ x 10^{-3})	290.7	39.6	39.6	1,556.0	25.5	1,581.5
Annual Costs ($ x 10^{-3})						
Capital	26.2	3.6	3.6	139.9	2.3	142.2
Operation & Maintenance	10.1	1.4	1.4	54.5	0.9	55.4
Land	0.4	0.1	0.1	0.1	0.1	0.2
Sludge Disposal	0.8					
Hazardous Waste Disposal						
Oil Disposal						
Energy & Power	1.9	0.1	0.1	17.4		17.4
Steam						
Waste Acid						
Crystal Disposal						
Chemical	2.1					
TOTAL	41.5	5.2	5.2	211.9	3.3	215.2
Credits						
Scale						
Sinter						
Oil						
Acid Recovery						
TOTAL CREDITS						
NET TOTAL	41.5	5.2	5.2	211.9	3.3	215.2

KEY TO TREATMENT ALTERNATIVES

PSES-1, PSNS-1, NSPS-1 = BPT
PSES-2, PSNS-2, NSPS-2 = BPT + BAT-1
PSES-3, PSNS-3, NSPS-3 = BPT + BAT-2

KEY TO C&TT STEPS

I: Pressure Filtration
J: Vapor Compression Distillation
K: Recycle

TABLE VIII-16

BAT/PSES/PSNS/NSPS TREATMENT MODEL COSTS: BASIS 7/1/78 DOLLARS

Subcategory: Salt Bath Descaling
Subdivision: Reducing
: Continuous

Model Size - TPD: 20
Oper. Days/Year : 260
Turns/Day : 3

C&TT Step	Total BPT	BAT Alternative 1		BAT Alternative 2		
		G	Total	H	I	Total
Investment ($ x 10^{-3})	353.7	36.2	36.2	1,556.0	25.5	1,581.5
Annual Costs ($ x 10^{-3})						
Capital	31.9	3.3	3.3	139.9	2.3	142.2
Operation & Maintenance	12.3	1.3	1.3	54.5	0.9	55.4
Land	0.4	0.1	0.1	0.1	0.1	0.2
Sludge Disposal	0.3					
Hazardous Waste Disposal						
Oil Disposal						
Energy & Power	1.9	0.2	0.2	14.5		14.5
Steam						
Waste Acid						
Crystal Disposal						
Chemical	2.0					
TOTAL	48.8	4.9	4.9	209.0	3.3	212.3
Credits						
Scale						
Sinter						
Oil						
Acid Recovery						
TOTAL CREDITS						
NET TOTAL	48.8	4.9	4.9	209.0	3.3	212.3

KEY TO TREATMENT ALTERNATIVES

PSES-1, PSNS-1, NSPS-1 = BPT
PSES-2, PSNS-2, NSPS-2 = BPT + BAT-1
PSES-3, PSNS-3, NSPS-3 = BPT + BAT-2

KEY TO C&TT STEPS

I: Pressure Filtration
J: Vapor Compression Distillation
K: Recycle

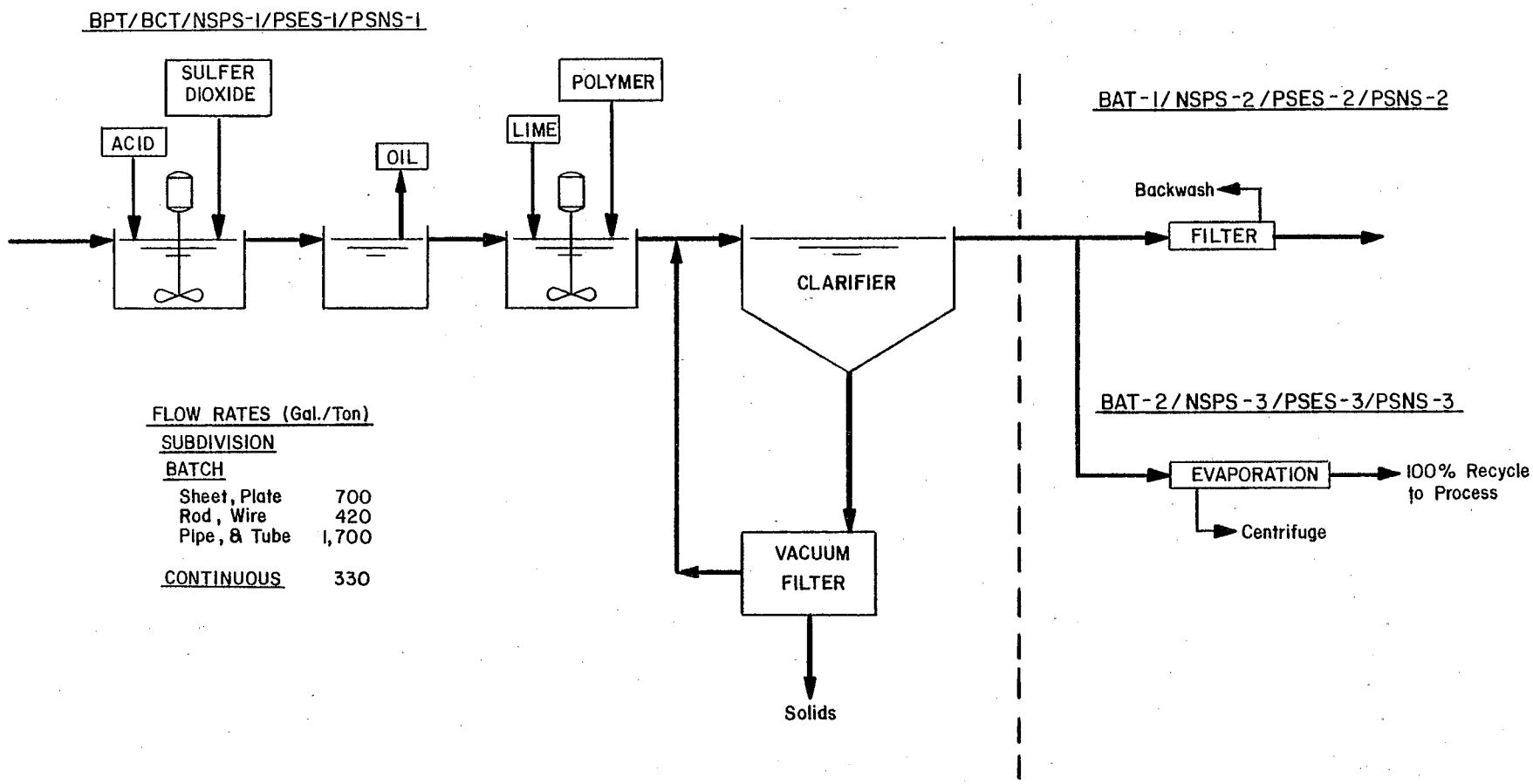

FLOW RATES (Gal./Ton)

SUBDIVISION	
BATCH	
Sheet, Plate	700
Rod, Wire	420
Pipe, & Tube	1,700
CONTINUOUS	330

ENVIRONMENTAL PROTECTION AGENCY

STEEL INDUSTRY STUDY
SALT BATH DESCALING-OXIDIZING
TREATMENT MODELS

Dwn. 12/3/81

FIGURE VIII-1

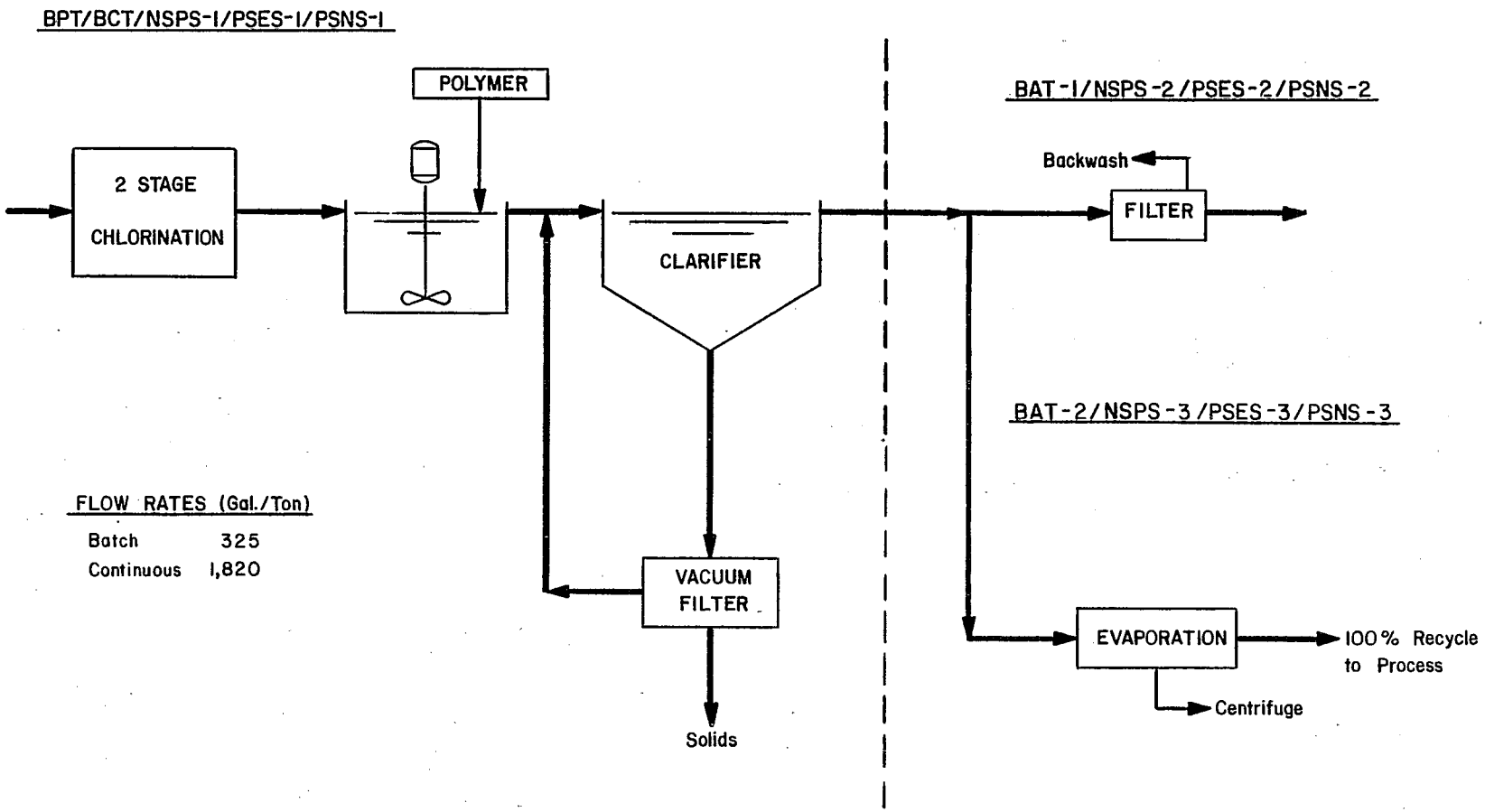

ENVIRONMENTAL PROTECTION AGENCY

STEEL INDUSTRY STUDY
SALT BATH DESCALING-REDUCING
TREATMENT MODELS

Dwn.12/3/81

FIGURE VIII-2

SALT BATH DESCALING SUBCATEGORY

SECTION IX

EFFLUENT QUALITY ATTAINABLE THROUGH THE APPLICATION OF THE BEST PRACTICABLE CONTROL TECHNOLOGY CURRENTLY AVAILABLE

Introduction

As described below, the promulgated best practicable control technology currently available (BPT) limitations for salt bath descaling operations are different from those proposed in January 1981. Separate limitations are provided for the following segments of the oxidizing and reducing subdivisions to take into account process water rates associated with the mode of operation and different product types:

Oxidizing Operations

Batch
- Sheet, Plate
- Rod, Wire, Bar
- Pipe, Tube

Continuous

Reducing Operations

Batch
Continuous

Also, effluent limitations were promulgated for chromium and nickel for all descaling operations and for cyanide for the reducing operations. A review of the treatment processes and effluent limitations associated with the salt bath descaling subcategory follows.

Identification of BPT

Based upon the information contained in Sections III through VIII of this report, the BPT limitations for the descaling operations are based upon the following treatment technologies.

A. Oxidizing Operations

Acidification is followed by chemical reduction of hexavalent chromium with sulfur dioxide, sodium metabisulfate or sodium hydrosulfite. Chemical reduction is followed by oil separation or skimming, neutralization/precipitation with lime, chemical

coagulation with polymer and settling in a clarifier. Sludges are dewatered in vacuum filters.

B. Reducing Operations

Chemical oxidation with chlorine for cyanide destruction is followed by neutralization/precipitation with acid, chemical coagulation with polymer and settling in a clarifier. Sludges are dewatered in vacuum filters.

Figures IX-1 and IX-2 depict the treatment systems described above.

Model Treatment System Flow Rates

Tables IX-1 and IX-2 present the development of model treatment system flow rates for descaling operations. As shown, the model flows are achieved by at least half of the plants in each segment. The Agency believes that these plants are typical of salt bath descaling operations, and that similar flows can be achieved at the other plants through water conservation practices. The BPT model treatment system flow rates are as follows:

Oxidizing Operations	BPT Flow (gal/ton)
Batch	
Sheet, Plate	700
Rod, Wire, Bar	420
Pipe, Tube	1700
Continuous	330
Reducing Operations	
Batch	325
Continuous	1820

Model Treatment System Effluent Quality

Tables A-33 and A-34 of Appendix A to Volume I present the development of the model treatment system effluent quality used to develop the BPT limitations. These long term data were obtained from a full scale plant treating both combination acid pickling and salt bath descaling wastewaters. The Agency believes that it is appropriate to base both the descaling and combination acid pickling BPT limitations on central treatment plant data, since wastewaters from these operations are always treated in central treatment facilities in the industry. The Agency believes that this plant is representative of those better plants in the industry treating descaling wastewaters. The model treatment system effluent quality is as follows:

	Daily Maximum	30 Day Average
Total Suspended Solids	70 mg/l	30 mg/l
Chromium	1.0	0.4
Nickel	0.9	0.3
Cyanide*	0.75	0.25
pH	6.0 to 9.0 std units	

*Applicable to reducing operations only

BPT Effluent Limitations

The above model treatment system flow rates and effluent quality were multiplied with appropriate conversion factors to develop the BPT effluent limitations presented in Table IX-3.

Justification of the BPT Effluent Limitations

The Agency considered two central treatment systems treating salt bath descaling and combination acid pickling wastewaters which, as noted before, are compatible wastewaters. The Agency compared the combined BPT effluent limitations for salt bath descaling and combination acid pickling operations to actual plant performance data. Data from these plants demonstrate that the BPT effluent limitations are achievable with the model treatment technologies described above. Refer to Tables IX-4 and IX-5 for this demonstration.

TABLE IX-1

SUMMARY OF FLOW DATA
SALT BATH DESCALING SUBCATEGORY
OXIDIZING

Segment	Plant Code	Production (Tons/Day)	Discharge Flow (GPT)
Batch			
Sheet/Plate	0020B-01	99	91
	0256L	*	*
	0424	NA	494
	0430C	54	1467
	0776H	13	391
	0856E	78	1846
	Production Weighted Flow (GPT) = 700.8(1)		
	Model Flow (GPT) = 700		
Rod/Wire/Bar	0060I	190	380
	0176-04	203	461
	0440A-01	63	342
	0776G	5	1283
	Production Weighted Flow (GPT) = 420.3		
	Model Flow (GPT) = 420		
Pipe & Tube	0088A-01	69	1774
	0088A-02	36	1553
	0248D	1	1026
	Production Weighted Flow (GPT) = 1691.9		
	Model Flow (GPT) = 1700		
Continuous	0256O	*	*
	0284A	138	104
	0528-02	153	235
	0528-03	54	667
	0528-04	90	400
	0528-05	210	617
	0684D	69	167
	Production Weighted Flow (GPT) = 330.7(1)		
	Model Flow (GPT) = 330		

* Confidential information

(1) The confidential information was included in this average calculation.

TABLE IX-2

SUMMARY OF FLOW DATA
SALT BATH DESCALING SUBCATEGORY
REDUCING

Segment	Plant Code	Production (Tons/Day)	Discharge Flow (GPT)
Batch	0176-01	173	611
	0176-02	262	330
	0256K	165	87
	0256N	27	1.8
	0684P	17	33
	Production Weighted Flow (GPT) = 321.6		
	Model Flow (GPT) = 325		
Continuous	0176-03	20	1818
	Model Flow (GPT) = 1800		

TABLE IX-3

BPT EFFLUENT LIMITATIONS
SALT BATH DESCALING SUBCATEGORY

	Daily Maximum Limitations (1)				30-Day Average Limitations (1)			
Oxidizing	TSS	Chromium	Cyanide	Nickel	TSS	Chromium	Cyanide	Nickel
Batch								
Sheet/Plate	0.204	0.00292	(2)	0.00263	0.0876	0.00117	(2)	0.000876
Rod/Wire	0.123	0.00175	(2)	0.00158	0.0526	0.000701	(2)	0.000526
Pipe & Tube	0.496	0.00709	(2)	0.00638	0.213	0.00284	(2)	0.00213
Continuous	0.0964	0.00138	(2)	0.00124	0.0413	0.000551	(2)	0.000413
Reducing								
Batch	0.0949	0.00136	0.00102	0.00122	0.0407	0.000542	0.000339	0.000407
Continuous	0.532	0.00759	0.00569	0.00683	0.228	0.00304	0.00190	0.00228

(1): kg/kkg of product
(2): This pollutant is limited at reducing operations only.

TABLE IX-4

JUSTIFICATION OF BPT EFFLUENT LIMITATIONS
COMBINATION ACID PICKLING AND SALT BATH DESCALING
PLANT 0060D

	BPT Limitations						Actual Discharge	
	kg/day allowed for Acid Pickling BPT		kg/day allowed for Salt Bath Descaling BPT		kg/day allowed for Central Treatment System		kg/day actually discharged from Central Treatment System	
Pollutant	30-Day Average	Daily Maximum	30-Day Average	Daily Maximum	30-Day Average	Daily Maximum	30-Day Average (1)	Daily Maximum (2)
TSS	63.69	148.38	13.45	31.40	77.14	179.78	14.7	42.3
Chromium	0.85	2.12	0.18	0.45	1.03	2.57	0.29	0.62
Nickel	0.64	1.91	0.13	0.40	0.77	2.31	0.26	0.64

(1) These values represent the averages of the monthly samples with data from upset conditions removed.
(2) These values represent the maximum of the individual daily samples with data from upset conditions removed.
(3) Cascade rinsing is installed at this plant. When flow rates are adjusted to the model BPT flow rates, the actual discharge remains in compliance with the BPT limitations.

TABLE IX-5

JUSTIFICATION OF BPT EFFLUENT LIMITATIONS
COMBINATION ACID PICKLING AND SALT BATH DESCALING
PLANT 0684D

	BPT Limitations[3]						Actual Discharge[4]	
	kg/day allowed for Acid Pickling BPT		kg/day allowed for Salt Bath Descaling BPT		kg/day allowed for Central Treatment System		kg/day actually discharged from Central Treatment System	
Pollutant	30-Day Average	Daily Maximum	30-Day Average	Daily Maximum	30-Day Average	Daily Maximum	30-Day[1] Average	Daily[2] Maximum
TSS	215.92	503.04	3.03	7.08	218.95	510.12	32.20	83.85
Chromium	2.87	7.19	0.04	0.10	2.91	7.29	1.13	3.78
Nickel	2.16	6.47	0.03	0.09	2.19	6.56	0.78	1.79

(1) These values represent the product of long term averages and 30-Day variability factors.
(2) These values represent 99 percent confidence level values determined by the plant.
(3) BPT limitations do not include allowances for non-regulated process wastewaters.
(4) Actual discharge reflects about 50 percent flow reduction from cascade rinse; actual discharge does not reflect treatment for hexavalent chromium which was installed after above data were obtained.

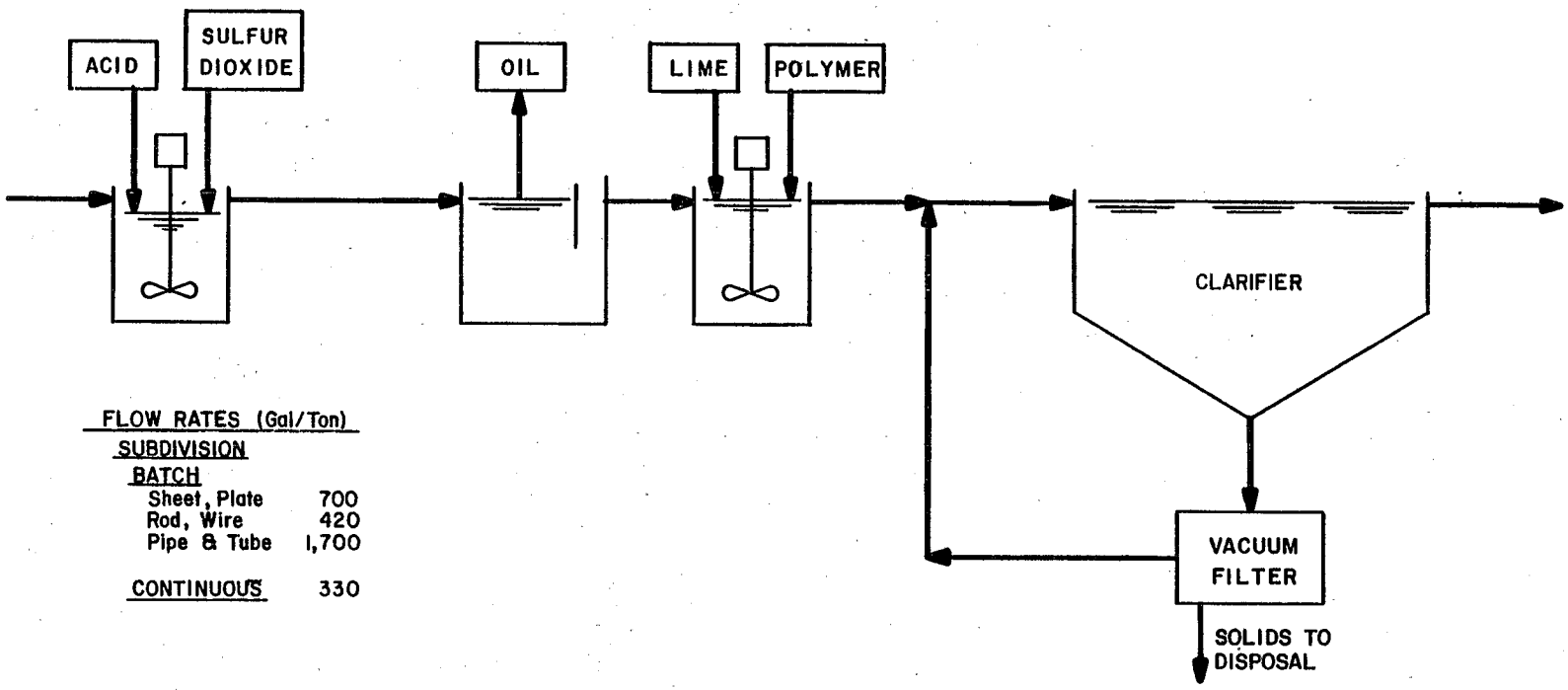

FLOW RATES (Gal/Ton)

SUBDIVISION	
BATCH	
Sheet, Plate	700
Rod, Wire	420
Pipe & Tube	1,700
CONTINUOUS	330

ENVIRONMENTAL PROTECTION AGENCY

STEEL INDUSTRY STUDY
SALT BATH DESCALING-OXIDIZING
BPT MODEL

Dwn.2/27/79

FIGURE IX-1

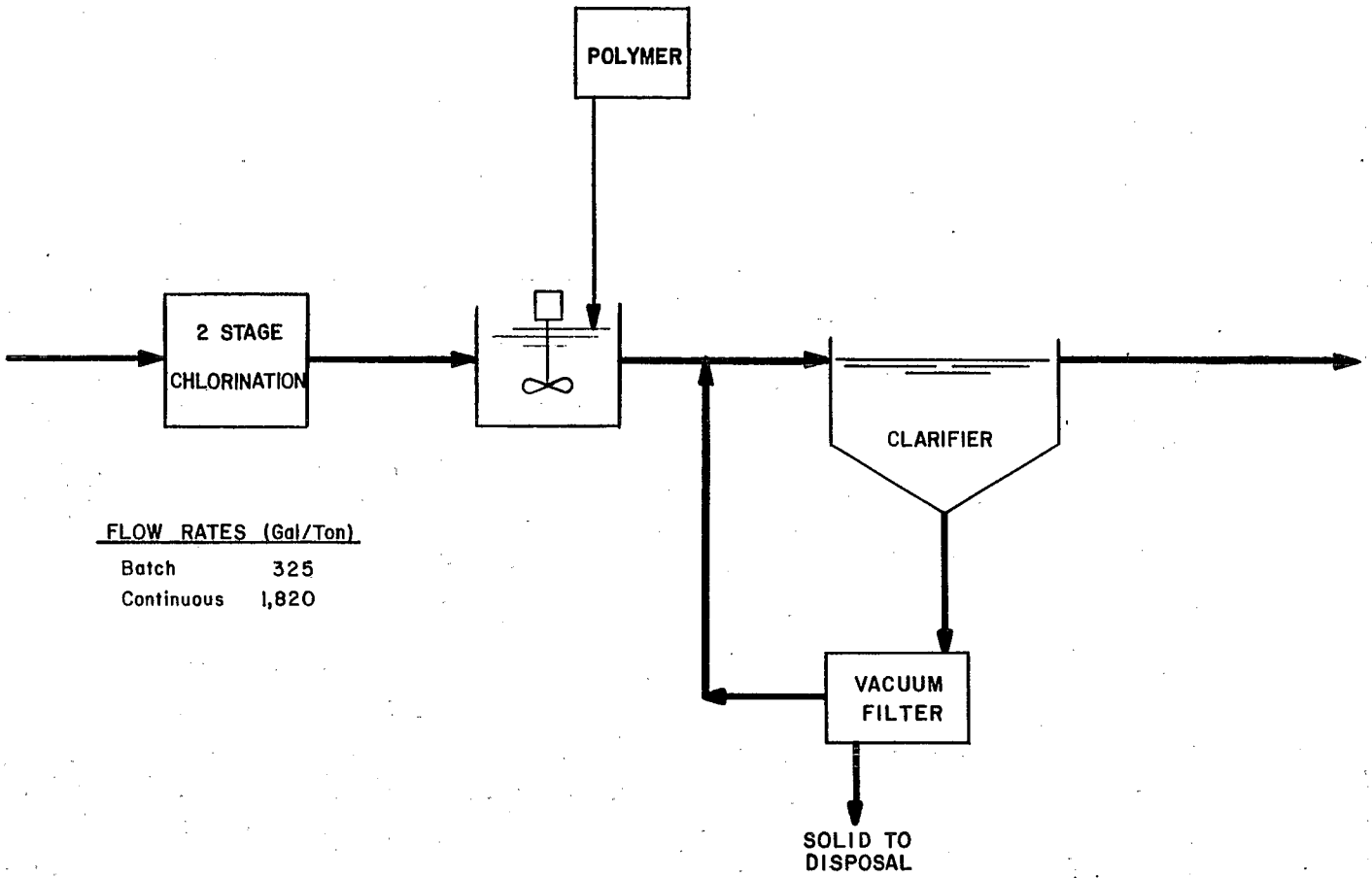

FLOW RATES (Gal/Ton)

Batch	325
Continuous	1,820

ENVIRONMENTAL PROTECTION AGENCY

STEEL INDUSTRY STUDY

SALT BATH DESCALING-REDUCING

BPT MODEL

Dwn.3/3/79

FIGURE IX-2

SALT BATH DESCALING SUBCATEGORY

SECTION X

EFFLUENT QUALITY ATTAINABLE THROUGH THE APPLICATION OF THE BEST AVAILABLE TECHNOLOGY ECONOMICALLY ACHIEVABLE

Introduction

The Best Available Technology Economically Achievable (BAT) Effluent Limitations are to be attained by July 1, 1984. BAT is determined by reviewing subcategory practices and identifying the best economically achievable control and treatment technologies employed within the subcategory. In addition, where the technology is readily transferrable from one subcategory or industry, such technology may be identified as BAT.

This section identifies BAT alternative treatment systems considered by the Agency for the salt bath descaling subcategory. However, the Agency promulgated BAT limitations that are the same as the BPT limitations for the toxic pollutants.

Identification of BAT

Based upon the information contained in Sections III through VIII, the Agency developed the following treatment technologies (as add-ons to the BPT model treatment system) for descaling operations.

Oxidizing and Reducing Operations

1. BAT Alternative 1

   The BPT effluent would be filtered to remove particulate toxic metals. The capital and operating costs for this alternative are presented in Tables VIII-11 to VIII-16. The treatment alternative is illustrated in Figures VIII-1 and VIII-2 for the various subdivisions.

2. BAT Alternative 2

   An evaporative system was considered to achieve zero discharge. This system consists of a multi-stage evaporator, a condenser and a centrifuge to dewater the slurry generated in the process. The distillate produced would be recycled to the descaling operations.

   The model plant capital and operating costs are also presented in Tables VIII-11 to VIII-16. The treatment alternative is diagrammed in Figures VIII-1 and VIII-2 for the various subdivisions.

The BAT treatment systems shown in Figures VIII-1 and VIII-2 represent those technologies in use at one or more plants, or demonstrated in other wastewater treatment applications. Filtration of descaling wastewaters is practiced at plants 0248B, and 0776G where the descaling wastewaters make up 18%, and 55% of the central treatment plant flows, respectively. Vapor compression distillation technology is not used to treat wastewaters in this subcategory.

The BAT limitations for each alternative treatment system are presented in Tables X-1 and X-2 for oxidizing and reducing operations, respectively. The selection of pollutants considered for limitation was based upon the following factors: presence as BPT limited pollutants; treatability using the technologies presented in the alternatives; quantity and toxicity in relation to the other process wastewater pollutants; the ability to serve as indicators of both the presence and the removal of other pollutants; and, the Agency's desire to facilitate central treatment of compatible wastewaters.

Monitoring data indicate that total chromium and total nickel are found at higher levels than other toxic pollutants in wastewaters from oxidizing and reducing operations; and, that wastewaters from reducing operations have the potential to contain significant levels of total cyanide. Based upon the above, the Agency has promulgated BAT limitations for chromium and nickel for oxidizing operations; and, limitations for chromium, nickel, and total cyanide for reducing operations. While other toxic metal pollutants are present in salt bath descaling wastewaters, the control of the limited toxic metals (Tables X-1 and X-2) will also result in the control of those toxic metal pollutants.

BAT Model Treatment System Flow Rates

There are no demonstrated direct end-of-pipe water recycle or internal water reuse systems, (i.e. cascade or countercurrent rinse) for descaling operations. Aside from conservation of applied process water rates, the Agency does not believe that direct reuse of salt bath descaling wastewaters is feasible, given the nature of the dissolved salts contained in these wastewaters. Based upon these factors, the Agency did not consider conventional end-of-pipe recycle or internal flow reduction systems as part of the BAT model treatment systems. Accordingly, the Agency used the demonstrated model BPT flow rates as the model BAT flow rates.

Wastewater Quality

Average effluent concentrations achievable with each BAT alternative treatment system are shown below. The maximum values are expressed in parentheses.

Toxic Pollutant	BAT -1	BAT -2
Chromium (Total)	0.10 (0.30)	0
Nickel (Total)	0.10 (0.30)	0
Cyanide (Total)	0.25 (0.75)	0

Reference is made to Tables A-2 through A-5 of Appendix A to Volume I for the derivation of the limitations for BAT Alternative 1. These data are primarily from hot forming operations, which have different wastewater characteristics than wastewaters from salt bath descaling operations. While the Agency does not believe these data are directly transferable to salt bath descaling operations, they do provide an indication of the potential toxic metal pollutant removal for filtration systems. However, based upon data obtained by the Agency for other lime precipitation, clarification, and filtration systems, the Agency does not believe filtration after clarification will produce significant incremental removal of toxic metals.

Effluent Limitations for BAT Alternatives

The effluent limitations, for each BAT alternative treatment system, were calculated by multiplying the respective model effluent flows by the pollutant concentrations and an appropriate conversion factor. Tables X-1 and X-2 present the effluent limitations developed for each alternative treatment system.

Selection of a BAT Alternative

The Agency did not select either BAT alternative as the basis for the promulgated BAT effluent limitations. BAT Alternative 1 was not selected for the reasons cited above. Alternative 2 was not selected on the basis of high costs and energy consumption. The Agency has determined that the toxic pollutant loading removal achieved by the model BPT treatment system is the Best Available Technology for descaling operations and has promulgated BAT limitations on that basis. These limitations are presented in Tables IX-3 and IX-4.

Justification of BAT Effluent Limitations

Reference is made to Tables IX-4 and IX-5 for a list of those plants, for which the Agency has data, that demonstrate the achievability of the BAT effluent limitations.

TABLE X-1

ALTERNATIVE BAT EFFLUENT LIMITATIONS
SALT BATH DESCALING
OXIDIZING

BAT Alternative 1

Segment / Batch	Chromium Concentration Basis (mg/l)	Chromium Effluent Limitations (kg/kkg)	Nickel Concentration Basis (mg/l)	Nickel Effluent Limitations (kg/kkg)
Sheet/Plate				
30-Day Avg.	0.1	0.000292	0.1	0.000292
Daily Max.	0.3	0.000876	0.3	0.000876
Rod/Wire				
30-Day Avg.	0.1	0.000175	0.1	0.000175
Daily Max.	0.3	0.000526	0.3	0.000526
Pipe & Tube				
30-Day Avg.	0.1	0.000709	0.1	0.000709
Daily Max.	0.3	0.00213	0.3	0.00213
Continuous				
30-Day Avg.	0.1	0.000138	0.1	0.000138
Daily Max.	0.3	0.000413	0.3	0.000413

BAT Alternative 2

This is a zero discharge treatment alternative, therefore, BAT limitations are not applicable

TABLE X-2

ALTERNATIVE BAT EFFLUENT LIMITATIONS
SALT BATH DESCALING
REDUCING

BAT Alternative 1

SEGMENT	Chromium Concentration Basis (mg/l)	Chromium Effluent Limitation (kg/kkg)	Nickel Concentration Basis (mg/l)	Nickel Effluent Limitation (kg/kkg)	Cyanide Concentration Basis (mg/l)	Cyanide Effluent Limitation (kg/kkg)
Batch						
30-Day Avg.	0.1	0.000136	0.1	0.000136	0.25	0.000339
Daily Max.	0.3	0.000407	0.3	0.000407	0.75	0.00102
Continuous						
30-Day Avg.	0.1	0.000759	0.1	0.000759	0.25	0.00190
Daily Max.	0.3	0.00228	0.3	0.00228	0.75	0.00569

BAT Alternative 2

This is a zero discharge treatment alternative, therefore, BAT limitations are not applicable

SECTION XI

BEST CONVENTIONAL POLLUTANT CONTROL TECHNOLOGY

Introduction

The 1977 Amendments added Section 301(b)(2)(E) to the Act establishing "best conventional pollutant control technology" [BCT] for discharges of conventional pollutants from existing industrial point sources. Conventional pollutants are those defined in Section 304(a)(4) [biochemical oxygen demanding pollutants (BOD_5), total suspended solids (TSS), fecal coliform, and pH], and any additional pollutants defined by the Administrator as "conventional" (oil and grease, 44 FR 44501, July 30, 1979).

BCT is not an additional limitation but replaces BAT for the control of conventional pollutants. In addition to other factors specified in Section 304(b)(4)(B), the Act requires that BCT limitations be assessed in light of a two part "cost-reasonableness" test. American Paper Institute v. EPA, 660 F.2d 954 (4th Cir. 1981). The first test compares the cost for private industry to reduce its conventional pollutants with the costs to publicly owned treatment works for similar levels of reduction in their discharge of these pollutants. The second test examines the cost-effectiveness of additional industrial treatment beyond BPT. EPA must find that limitations are "reasonable" under both tests before establishing them as BCT. In no case may BCT be less stringent than BPT.

EPA published its methodology for carrying out the BCT analysis on August 29, 1979 (44 FR 50732). In the case mentioned above, the Court of Appeals ordered EPA to correct data errors underlying EPA's calculation of the first test, and to apply the second cost test. (EPA had argued that a second cost test was not required.)

Development of BCT Limitations

The Agency has promulgated BCT limitations for suspended solids and pH, which are the same as the corresponding BPT limitations, for both oxidizing and reducing operations. Since the BPT and BCT limitations are the same, no additional treatment or costs beyond BPT will be necessary.

SALT BATH DESCALING SUBCATEGORY

SECTION XII

EFFLUENT QUALITY ATTAINABLE THROUGH THE APPLICATION OF NEW SOURCE PERFORMANCE STANDARDS

Introduction

New Source Performance Standards (NSPS) represent the degree of effluent reduction achievable through the application of the Best Available Demonstrated Control Technology (BDT), process, operating methods, or other alternatives, including, where practicable, a standard permitting no discharge of pollutants.

For salt bath descaling operations, a zero discharge standard is not readily attainable. Due to the nature of the rinsing or quenching steps, descaling wastewaters cannot be directly reused or recycled to any substantial degree. Only if descaling wastewaters are discharged to a large central treatment system is reuse viable. However, this reuse will not result in zero discharge.

Identification of NSPS

Oxidizing Operations

A. NSPS Alternative 1

The model treatment system is presented in Figure XII-1. Acid and sulfur dioxide are added to the wastewaters for hexavalent chromium reduction. Following neutralization with lime, the wastewaters are aerated to sparge any excess sulfur dioxide. Polymer is added prior to sedimentation in a clarifier, from which surface oils and scum are skimmed. Sludges generated in the treatment process are dewatered in a vacuum filter. This model treatment system is the same as the model BPT treatment system. The capital and operating costs for this alternative are presented in Tables VIII-11 through VIII-14.

B. NSPS Alternative 2

Filtration of the effluent from the above system is added to form NSPS Alternative 2. The treatment system is also depicted in Figure VIII-1, and the model plant costs are presented in Tables VIII-11 through VIII-14.

C. NSPS Alternative 3

The effluent from NSPS Alternative 1 is processed in a vapor compression distillation system and recycled to the process to achieve zero discharge.

Reducing Operations

A. NSPS Alternative 1

The treatment system is diagrammed in Figure XII-2. Chlorine is added to the alkaline process wastewaters to oxidize cyanide. Acid is then added for pH control, and polymer is added prior to sedimentation in a settling basin. The sludges generated in the treatment process are dewatered in a vacuum filter. This alternative is the same as the model BPT treatment system. The capital and operating costs for this alternative are presented in Tables VIII-15 and VIII-16.

B. NSPS Alternatives 2 and 3

These alternatives are the same as those presented above for oxidizing operations. Respective capital and operating costs for these alternatives are presented in Tables VIII-15 and VIII-16.

Rationale for Selection of NSPS

The NSPS alternative treatment systems for the salt bath descaling subcategory are the same as the BPT model and BAT alternative treatment systems described in Sections IX and X. The rationale presented in these sections is applicable to NSPS.

The NSPS treatment alternatives for oxidizing and reducing operations are addressed below.

Treatment Systems

The treatment system outlined in NSPS Alternative 1 for oxidizing and reducing operations is well demonstrated as shown in Section IX. As noted in Section X, filtration of descaling wastewaters is demonstrated for central treatment systems. The third alternative, vapor compression distillation, is not demonstrated in the steel industry for wastewater treatment applications.

The resulting effluent wastewater quality for the NSPS alternatives is presented in Tables XII-1 and XII-2, for oxidizing and reducing operations, respectively. As noted in Section X, the effluent levels were based upon the capabilities of the various wastewater treatment technologies. The pollutants listed on Tables XII-1 and XII-2 include those pollutants limited at BPT and BAT. See Sections VI, IX, and X for the factors considered in selecting these pollutants.

Model Flow Rates

The NSPS model treatment system flow rates are the same as those demonstrated flow rates used to develop the BPT and BAT limitations. As noted earlier, aside from process water conservation practices, the Agency is not aware of demonstrated internal process technologies or end-of-pipe recycle methods available for salt bath descaling operations. Thus, the Agency has determined that the above referenced flows are the best demonstrated flows for salt bath descaling operations.

Selection of NSPS Alternative

The Agency selected NSPS Alternative 1 as the NSPS model treatment system. NSPS Alternative 1 was selected for the same reason noted in the discussion in Section X regarding the selection of the BAT Alternative.

Demonstration of NSPS

Tables IX-4 and IX-5 present the demonstration of the promulgated NSPS.

TABLE XII-1

NSPS EFFLUENT LEVELS AND LOADS
SALT BATH DESCALING
OXIDIZING

SEGMENT	TSS Concentration Basis (mg/l)	TSS Effluent Standard (kg/kkg)	Chromium Concentration Basis (mg/l)	Chromium Effluent Standard (kg/kkg)	Nickel Concentration Basis (mg/l)	Nickel Effluent Standard (kg/kkg)
NSPS Alternative 1*						
Batch						
Sheet/Plate						
30-Day Avg.	30	0.0876	0.4	0.00117	0.3	0.000876
Daily Max.	70	0.204	1.0	0.00292	0.9	0.00263
Rod/Wire						
30-Day Avg.	30	0.0526	0.4	0.000701	0.3	0.000526
Daily Max.	70	0.123	1.0	0.00175	0.9	0.00158
Pipe & Tube						
30-Day Avg.	30	0.213	0.4	0.00284	0.3	0.00213
Daily Max.	70	0.496	1.0	0.00709	0.9	0.00638
Continuous						
30-Day Avg.	30	0.0413	0.4	0.000551	0.3	0.000413
Daily Max.	70	0.0964	1.0	0.00138	0.9	0.00124
NSPS Alternative 2						
Batch						
Sheet/Plate						
30-Day Avg.	15	0.0438	0.1	0.000292	0.1	0.000292
Daily Max.	40	0.117	0.3	0.000876	0.3	0.000876
Rod/Wire						
30-Day Avg.	15	0.0263	0.1	0.000175	0.1	0.000175
Daily Max.	40	0.0701	0.3	0.000526	0.3	0.000526
Pipe & Tube						
30-Day Avg.	15	0.106	0.1	0.000709	0.1	0.000709
Daily Max.	40	0.284	0.3	0.00213	0.3	0.00213
Continuous						
30-Day Avg.	15	0.0207	0.1	0.000138	0.1	0.000138
Daily Max.	40	0.0551	0.3	0.000413	0.3	0.000413

NSPS Alternative 3

This is a zero discharge treatment alternative, therefore, NSPS are not applicable

* The pH range limitation is 6.0 - 9.0 units. This is the selected alternative.

TABLE XII-2

NSPS EFFLUENT LEVELS AND LOADS
SALT BATH DESCALING
REDUCING

SEGMENT	TSS Concentration Basis (mg/l)	TSS Effluent Standard (kg/kkg)	Chromium Concentration Basis (mg/l)	Chromium Effluent Standard (kg/kkg)	Nickel Concentration Basis (mg/l)	Nickel Effluent Standard (kg/kkg)	Cyanide Concentration Basis (mg/l)	Cyanide Effluent Standard (kg/kkg)
NSPS Alternative 1*								
Batch								
30-Day Avg.	30	0.0407	0.4	0.000542	0.3	0.000407	0.25	0.000339
Daily Max.	70	0.0949	1.0	0.00136	0.9	0.00122	0.75	0.00102
Continuous								
30-Day Avg.	30	0.228	0.4	0.00304	0.3	0.00228	0.25	0.00190
Daily Max.	70	0.532	1.0	0.00759	0.9	0.00683	0.75	0.00569
NSPS Alternative 2								
Batch								
30-Day Avg.	15	0.0203	0.1	0.000136	0.1	0.000136	0.25	0.000339
Daily Max.	40	0.0542	0.3	0.000407	0.3	0.000407	0.75	0.00102
Continuous								
30-Day Avg.	15	0.114	0.1	0.000759	0.1	0.000759	0.25	0.00190
Daily Max.	40	0.304	0.3	0.00228	0.3	0.00228	0.75	0.00569

NSPS Alternative 3

This is a zero discharge treatment alternative, therefore, NSPS are not applicable

* The pH range limitation is 6.0 - 9.0 units. This is the selected alternative.

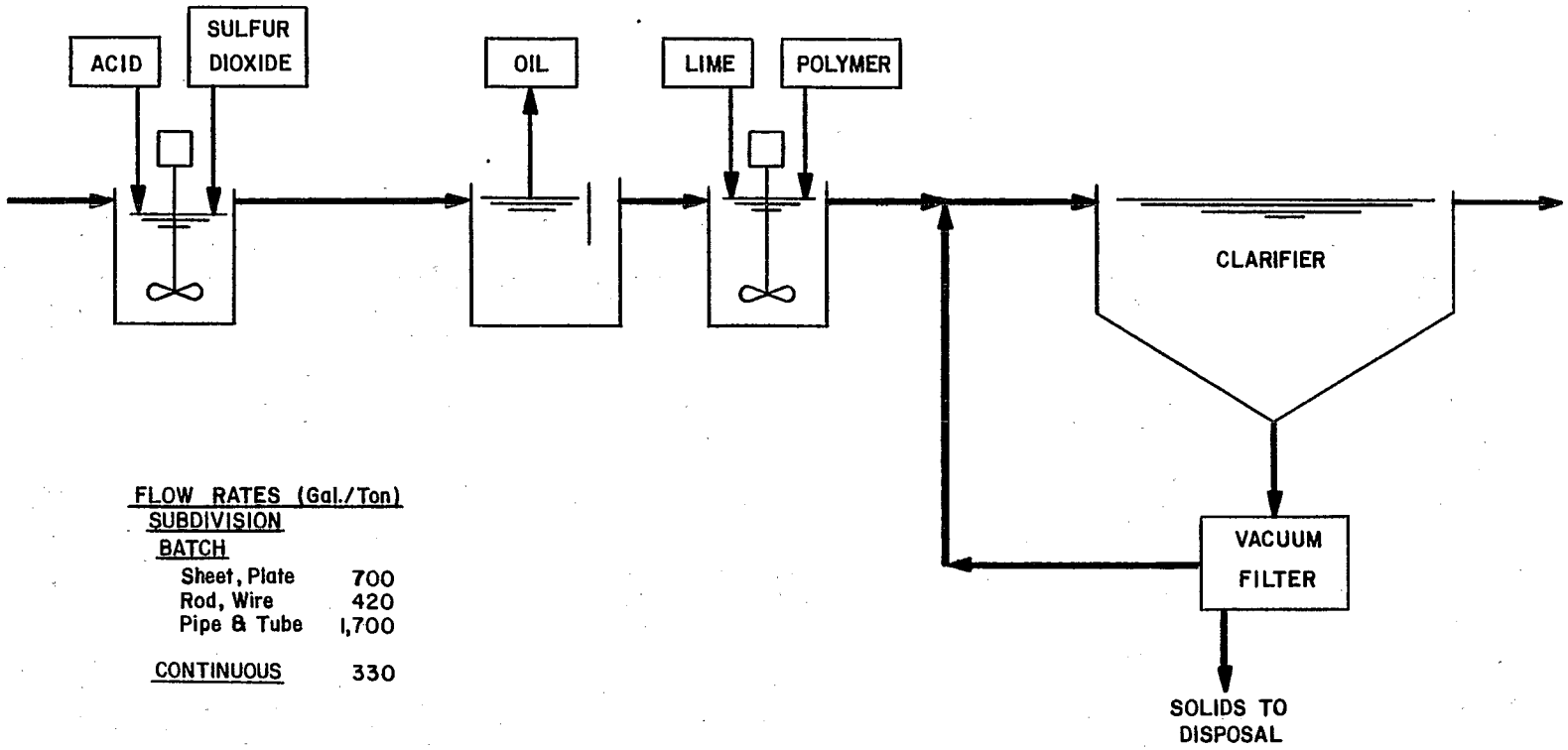

FLOW RATES (Gal./Ton)

SUBDIVISION	
BATCH	
Sheet, Plate	700
Rod, Wire	420
Pipe & Tube	1,700
CONTINUOUS	330

ENVIRONMENTAL PROTECTION AGENCY

STEEL INDUSTRY STUDY
SALT BATH DESCALING-OXIDIZING
NSPS MODEL

Dwn 12/3/81

FIGURE XII -1

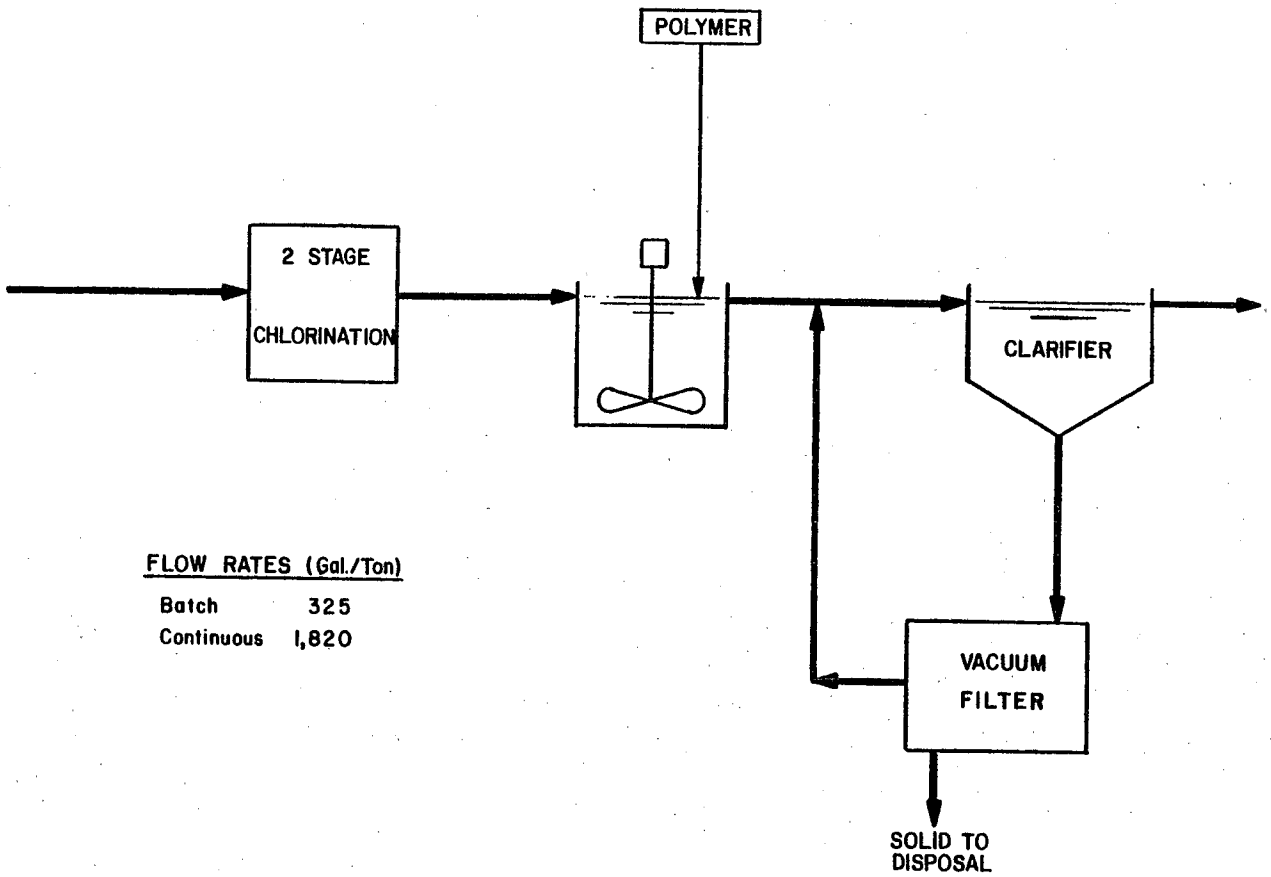

FLOW RATES (Gal./Ton)

Batch	325
Continuous	1,820

ENVIRONMENTAL PROTECTION AGENCY

STEEL INDUSTRY STUDY
SALT BATH DESCALING-REDUCING
NSPS MODEL

Dwn. 12/3/81

FIGURE XII-2

SALT BATH DESCALING SUBCATEGORY

SECTION XIII

PRETREATMENT STANDARDS FOR SALT BATH DESCALING OPERATIONS DISCHARGING TO PUBLICLY OWNED TREATMENT WORKS

Introduction

This section presents alternative pretreatment systems for salt bath descaling operations which discharge to publicly owned treatment works (POTWs). The general pretreatment and categorical pretreatment standards applying to descaling operations are discussed below.

General Pretreatment Standards

For detailed information on Pretreatment Standards, refer to 46 FR 9404 et seq,, "General Pretreatment Regulations for Existing and New Sources of Pollution," (January 28, 1981). See also 47 FR 4518 (February 1, 1982). 40 CFR Part 403 describes national standards (prohibited discharges and categorical standards), revision of categorical standards and POTW pretreatment programs.

In establishing pretreatment standards for descaling operations, the Agency considered the objectives and requirements of the General Pretreatment Regulations.

Identification of Pretreatment Alternatives

The alternative pretreatment systems considered by the Agency for oxidizing and reducing operations are the same as those considered for BPT and BAT. Reference is made to Sections IX and X for descriptions of these treatment systems, model treatment system flow rates, and resultant effluent quality. Figures XIII-1 and XIII-2 illustrate these treatment systems. The respective model plant costs are presented in Tables VIII-11 to VIII-16.

Selection of a Pretreatment Alternative

As noted earlier, descaling wastewaters contain both dissolved and particulate toxic metals. The pretreatment alternatives described above are designed to control toxic metals, and thus are designed to minimize pass through of these pollutants at POTWs receiving descaling wastewaters. The three pretreatment alternatives accomplish between 92% and 100% removal of the toxic metal pollutants limited at BAT.

PSES/PSNS Alternative 1 was selected as the basis for the promulgated PSES and PSNS. This alternative is the same as the selected BPT and BAT alternative for descaling operations. The removal rates of toxic

metals from untreated descaling wastewaters for Alternative 1 are compared to the POTW removal rates of these metals:

Pollutant Removal Rate Comparison

	PSES/PSNS Model	Actual POTW
Chromium	95 to 99.9%	65%
Nickel	92 to 96%	19%

As shown above, the selected PSES/PSNS alternative will prevent pass through of toxic metals at POTWs to a significantly greater degree than would occur if descaling wastewaters were discharged untreated to POTWs. The achievability of these standards is reviewed in Sections IX and X. The model treatment systems are depicited in Figures XIII-1 and XIII-2, while the PSES and PSNS are shown in Tables XIII-1 and XIII-2.

TABLE XIII-1

PSES AND PSNS EFFLUENT LEVELS AND LOADS
SALT BATH DESCALING
OXIDIZING

	Chromium		Nickel	
	Concentration Basis (mg/l)	Effluent Standard (kg/kkg)	Concentration Basis (mg/l)	Effluent Standard (kg/kkg)
PSES/PSNS Alternative 1*				
Batch				
Sheet/Plate				
30-Day Avg.	0.4	0.00117	0.3	0.000876
Daily Max.	1.0	0.00292	0.9	0.00263
Rod/Wire				
30-Day Avg.	0.4	0.000701	0.3	0.000526
Daily Max.	1.0	0.00175	0.9	0.00158
Pipe & Tube				
30-Day Avg.	0.4	0.00284	0.3	0.00213
Daily Max.	1.0	0.00709	0.9	0.00638
Continuous				
30-Day Avg.	0.4	0.000551	0.3	0.000413
Daily Max.	1.0	0.00138	0.9	0.00124
PSES/PSNS Alternative 2				
Batch				
Sheet/Plate				
30-Day Avg.	0.1	0.000292	0.1	0.000292
Daily Max.	0.3	0.000876	0.3	0.000876
Rod/Wire				
30-Day Avg.	0.1	0.000175	0.1	0.000175
Daily Max.	0.3	0.000526	0.3	0.000526
Pipe & Tube				
30-Day Avg.	0.1	0.000709	0.1	0.000709
Daily Max.	0.3	0.00213	0.3	0.00213
Continuous				
30-Day Avg.	0.1	0.000138	0.1	0.000138
Daily Max.	0.3	0.000413	0.3	0.000413

PSES/PSNS Alternative 3

This is a zero discharge treatment alternative, therefore, PSES and PSNS are not applicable.

---

* The pH range standard is 6.0 - 9.0 units. This is the selected alternative.

TABLE XIII-2

PSES AND PSNS EFFLUENT LEVELS AND LOADS
SALT BATH DESCALING
REDUCING

SEGMENT		Chromium Concentration Basis (mg/l)	Chromium Effluent Standard (kg/kkg)	Nickel Concentration Basis (mg/l)	Nickel Effluent Standard (kg/kkg)	Cyanide Concentration Basis (mg/l)	Cyanide Effluent Standard (kg/kkg)
PSES/PSNS Alternative 1*							
Batch	30-Day Avg.	0.4	0.000542	0.3	0.000407	0.25	0.000339
	Daily Max.	1.0	0.00136	0.9	0.00122	0.75	0.00102
Continuous	30-Day Avg.	0.4	0.00304	0.3	0.00228	0.25	0.00190
	Daily Max.	1.0	0.00759	0.9	0.00683	0.75	0.00569
PSES/PSNS Alternative 2							
Batch	30-Day Avg.	0.1	0.000136	0.1	0.000136	0.25	0.000339
	Daily Max.	0.3	0.000407	0.3	0.000407	0.75	0.00102
Continuous	30-Day Avg.	0.1	0.000759	0.1	0.000759	0.25	0.00190
	Daily Max.	0.3	0.00228	0.3	0.00228	0.75	0.00569

PSES/PSNS Alternative 3

This is a zero discharge treatment alternative, therefore, PSES and PSNS are not applicable.

* The pH range standard is 6.0 - 9.0 units. This is the selected alternative.

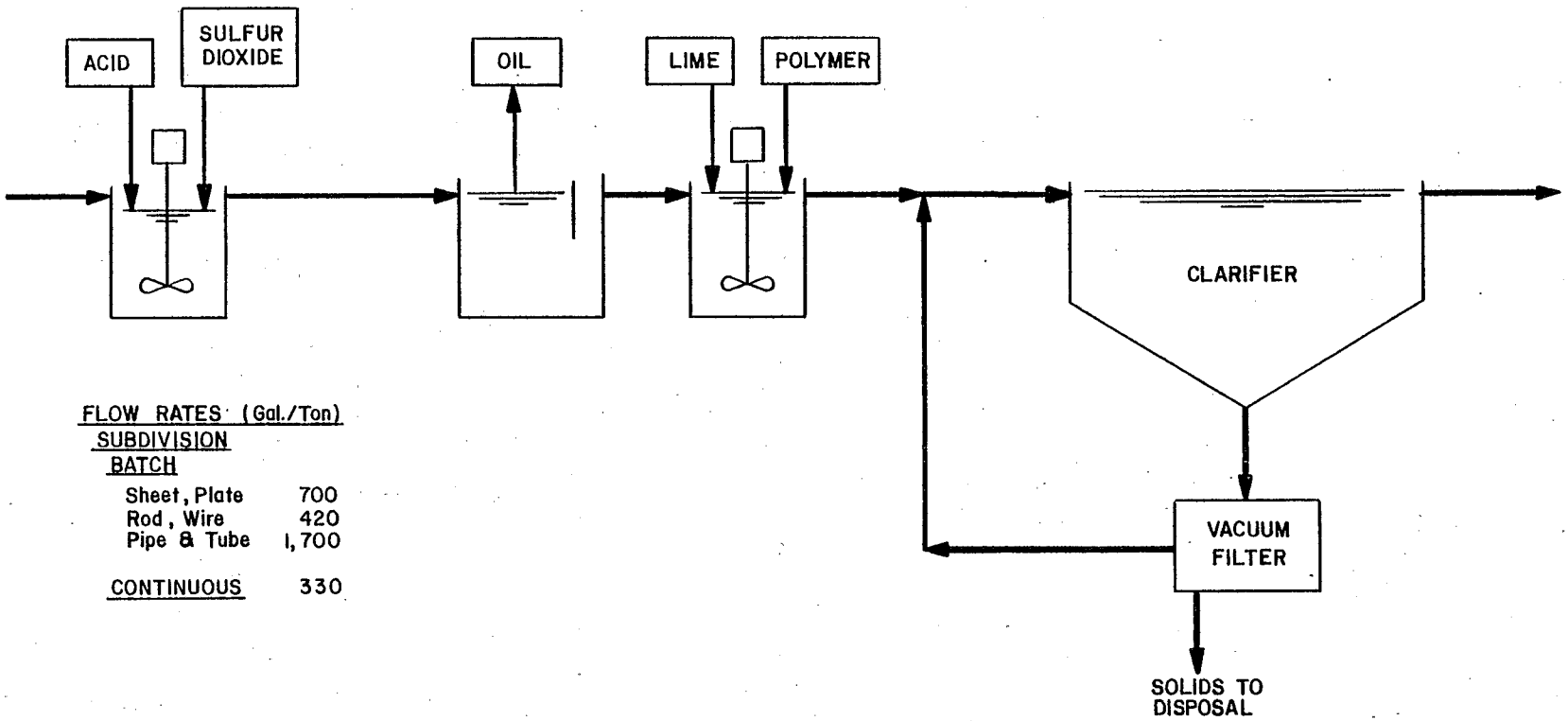

FLOW RATES (Gal./Ton)

SUBDIVISION	
BATCH	
Sheet, Plate	700
Rod, Wire	420
Pipe & Tube	1,700
CONTINUOUS	330

ENVIRONMENTAL PROTECTION AGENCY

STEEL INDUSTRY STUDY

SALT BATH DESCALING-OXIDIZING

PSES/PSNS MODEL

Dwn. 12/3/81

FIGURE XIII-1

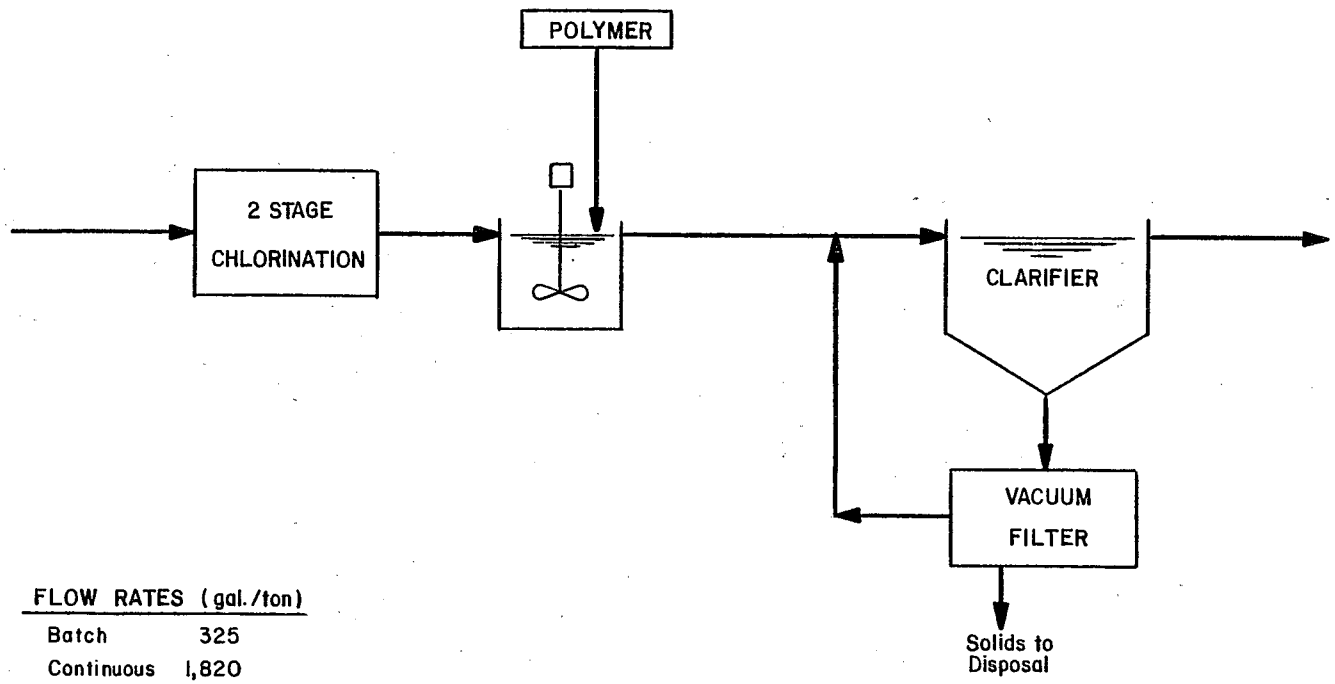

FLOW RATES (gal./ton)	
Batch	325
Continuous	1,820

ENVIRONMENTAL PROTECTION AGENCY

STEEL INDUSTRY STUDY
SALT BATH DESCALING - REDUCING
PSES/PSNS MODEL

Dwn. 12/15/81

FIGURE XIII - 2

ACID PICKLING SUBCATEGORY

SECTION I

PREFACE

The USEPA has promulgated effluent limitations and standards for the steel industry pursuant to Sections 301, 304, 306, 307 and 501 of the Clean Water Act. The regulation contains effluent limitations for best practicable control technology currently available (BPT), best conventional pollutant control technology (BCT), and best available technology economically achievable (BAT) as well as pretreatment standards for new and existing sources (PSNS and PSES) and new source performance standards (NSPS).

This part of the Development Document highlights the technical aspects of EPA's study of the Acid Pickling Subcategory of the Iron and Steel Industry. Volume I of the Development Document addresses general issues pertaining to the industry, while other volumes contain specific subcategory reports.

ACID PICKLING SUBCATEGORY

SECTION II

CONCLUSIONS

Based upon this study, a review of previous studies and comments received on the regulation proposed on January 7, 1981 (46 FR 1858), the Agency has reached the following conclusions.

1. The Agency has combined all acid pickling operations into one subcategory. The three subdivisions - sulfuric, hydrochloric, and combination acid - which have been established for this subcategory reflect differences in wastewater characteristics. Each subdivision has been further segmented by product type to reflect differences in wastewater volume. Segments have also been established within each subdivision to separately account for wastewaters from fume and absorber vent scrubbers.

2. The Agency has promulgated BPT limitations for the acid pickling subcategory which are different from those promulgated in March 1976 and those proposed in January 1981. These changes resulted from different model flow rates used as a consequence of segmentation by product type. In addition the Agency has decided to promulgate BPT limitations for the toxic metal pollutants discussed below, in lieu of the proposed BPT limitations for dissolved iron and fluoride. The Agency established limitations for lead and zinc for the sulfuric and hydrochloric acid pickling subdivisions, and chromium and nickel for the combination acid pickling subdivision.

3. The Agency promulgated BAT effluent limitations and PSES which are identical to the BPT limitations for toxic metal pollutants. The Agency determined that available treatment technologies beyond those considered for BPT could not be retrofitted at all pickling operations (cascade rinsing); did not produce substantial effluent reductions (filtration); or were too costly and energy intensive (vapor compression distillation).

4. The Agency promulgated BCT effluent limitations which are identical to the BPT limitations for conventional pollutants.

5. The Agency has promulgated NSPS and PSNS which are more stringent than the BAT effluent limitations and PSES. Cascade rinsing is included in the model NSPS and PSNS treatment systems. Problems associated with retrofitting cascade rinse systems to existing sources are not encountered with the construction of new sources.

6. Sampling and analysis of acid pickling wastewaters revealed significant concentrations of conventional and toxic metal pollutants. Toxic organic pollutants were found at low levels in

some acid pickling wastewaters. The Agency estimates that the following effluent reduction benefits will result from compliance with the BPT, BCT, and BAT limitations and PSES:

Pollutant	Direct Discharges Effluent Loads (Tons/Year) Raw Waste	BPT, BCT, and BAT
Flow, MGD	72.5	58.4
TSS	8,675	1893.7
Oil and Grease	1,070	530.2
Toxic Metals	6,382	66.7
Toxic Organics	-	-
Dissolved Iron	277,706	75.8
Fluoride	18,502	302.4

Pollutant	Indirect Discharges Effluent Loads (Tons/Year) Raw Waste	PSES
Flow, MGD	14.2	10.7
TSS	1,552.1	329.7
Oil and Grease	192.3	92.4
Toxic Metals	1,053.2	11.5
Toxic Organics	-	-
Dissolved Iron	45,468.0	13.1
Fluoride	5,032.4	45.4

7. Based upon pollution control facilities in place as of July 1, 1981, the Agency estimates the industry will incur the following costs in complying with the limitations and standards. The Agency has determined that the effluent reduction benefits associated with compliance with the effluent limitations and standards justify the costs presented below:

Treatment Level	Costs (Millions of July 1, 1978 Dollars) Investment Total	Investment In Place	Investment Required	Annual Total	Annual In Place	Annual Required
BPT	166.80	160.62	6.18	57.30	53.71	3.59
PSES	29.04	13.75	15.29	10.37	5.85	4.52
TOTAL	195.84	174.37	21.47	67.67	59.56	8.11

The Agency has also determined that the effluent reduction benefits associated with compliance with new source standards (NSPS, PSNS) justify those costs.

8. With regard to the "remand issues," the Agency concluded that with respect to the Acid Pickling subcategory:

   a. Age of a plant has no significant effect upon the ease or cost of retrofitting pollution control equipment. Neither relaxed limitations for older plants nor alternate effluent limitations based upon retrofit costs are established for acid pickling operations. The Agency did, however, determine that cascade rinsing could not be reasonably retrofitted at all existing plants. This determination was based on the configuration and space limitations at certain plants, irrespective of age. As a result, the BPT, BCT and BAT limitations are not based upon the use of this technology.

   b. The Agency has found that its estimates of the cost of installing the model wastewater treatment systems are sufficient to cover site-specific conditions. The Agency compared its model based cost estimates with actual costs reported by the industry. This comparision showed that the Agency's cost estimates were in fact higher than the costs reported by the industry. The costs provided by the industry included site specific and retrofit costs. Hence, the Agency concludes that its model-based cost estimates are sufficient to cover site-specific and retrofit costs. For more detail on cost comparisions refer to Section VIII.

   c. The impact of these limitations and standards upon water consumption is insignificant. The recycle components of the model treatment systems do not elevate the temperature of the water to the point where evaporation becomes significant.

9. The basic effluent limitations and standards are based upon spent pickle liquor and rinsewater flows (gal/ton) and pollutant concentrations to yield mass limitations in kg/kkg (lb/1000 lb) of steel pickled. The Agency considered using product surface area pickled as a basis for the limitations and standards. However, the necessary data are not widely available in the

industry. Hence, the limitations and standards are based upon production tonnage.

10. The effluent limitations and standards for fume and absorber vent scrubbers are established as daily mass limitations, kg/day (lb/day). These limitations and standards should be added to the basic limitations for those pickling operations with fume or absorber vent scrubbers. The Agency could not relate the rate of these scrubber discharges to production rate, product type, air flow through the scrubber or scrubber type. As a result, the limitations and standards are specified on a mass load per day basis, rather than on a mass load per quantity of product basis. Scrubbers are not installed at all pickling operations. Hence, these scrubber discharges are separately limited on the basis of kg/day per scrubber.

11. Although the Agency found a significant number of toxic metal pollutants in acid pickling wastewaters, it has established limitations and standards for four toxic metals. These pollutants serve as "indicator" pollutants for those toxic metals and other pollutants (e.g., iron and fluoride) which are not directly limited. Lead, and zinc are used as indicator pollutants for the sulfuric and hydrochloric acid subdivisions. Chromium and nickel have been selected for the combination acid subdivision.

12. Table II-1 presents the model flow and effluent concentration data used to develop the BPT effluent limitations for the acid pickling subcategory. The effluent limitations are presented in Table II-2. Table II-3 presents the model flow and effluent quality basis used to develop the BAT and BCT limitations and NSPS, PSES and PSNS for the acid pickling subcategory. The effluent limitations and standards are presented in Table II-4.

TABLE II-1

BPT TREATMENT MODEL FLOWS AND EFFLUENT QUALITY
ACID PICKLING SUBCATEGORY

Subdivision	Flow gal/ton	30-Day Average and Daily Maximum Concentrations (mg/l)												
		TSS		Oil & Grease[1]		Chromium		Lead		Nickel		Zinc		pH (SU)
		Avg	Max	Avg	Max	Avg	Max	Avg	Max	Avg	Max	Avg	Max	
Sulfuric Acid														
Strip/Sheet/Plate	180	30	70	10	30	-	-	0.15	0.45	-	-	0.1	0.3	6.0-9.0
Rod/Wire/Coil	280	30	70	10	30	-	-	0.15	0.45	-	-	0.1	0.3	6.0-9.0
Bar/Billet/Bloom	90	30	70	10	30	-	-	0.15	0.45	-	-	0.1	0.3	6.0-9.0
Pipe/Tube/Other	500	30	70	10	30	-	-	0.15	0.45	-	-	0.1	0.3	6.0-9.0
Fume Scrubber[2]	15 gpm	30	70	10	30	-	-	0.15	0.45	-	-	0.1	0.3	6.0-9.0
Hydrochloric Acid														
Strip/Sheet/Plate	280	30	70	10	30	-	-	0.15	0.45	-	-	0.1	0.3	6.0-9.0
Rod/Wire/Coil	490	30	70	10	30	-	-	0.15	0.45	-	-	0.1	0.3	6.0-9.0
Pipe/Tube	1020	30	70	10	30	-	-	0.15	0.45	-	-	0.1	0.3	6.0-9.0
Absorber Vent Scrubber[3]	100 gpm	30	70	10	30	-	-	0.15	0.45	-	-	0.1	0.3	6.0-9.0
Fume Scrubber[2]	15 gpm	30	70	10	30	-	-	0.15	0.45	-	-	0.1	0.3	6.0-9.0
Combination Acid														
Batch - Strip/Sheet/Plate	460	30	70	10	30	0.4	1.0	-	-	0.3	0.9	-	-	6.0-9.0
Cont. - Strip/Sheet/Plate	1500	30	70	10	30	0.4	1.0	-	-	0.3	0.9	-	-	6.0-9.0
Rod/Wire/Coil	510	30	70	10	30	0.4	1.0	-	-	0.3	0.9	-	-	6.0-9.0
Bar/Billet/Bloom	230	30	70	10	30	0.4	1.0	-	-	0.3	0.9	-	-	6.0-9.0
Pipe/Tube	770	30	70	10	30	0.4	1.0	-	-	0.3	0.9	-	-	6.0-9.0
Fume Scrubber[2]	15 gpm	30	70	10	30	0.4	1.0	-	-	0.3	0.9	-	-	6.0-9.0

(1) Oil and grease is limited only when pickling wastewater is treated in combination with cold rolling wastewater.
(2) The 15 gpm fume scrubber flow is in addition to the gal/ton flow shown for each acid pickling subdivision.
(3) The 100 gpm absorber vent scrubber flow is in addition to the strip/sheet/plate rinse flow and the 15 gpm fume scrubber flow.

TABLE II-2

BPT EFFLUENT LIMITATIONS
ACID PICKLING SUBCATEGORY

Subdivision	30-Day Average and Daily Maximum Effluent Limitations (kg/kkg of Product)												
	TSS		Oil & Grease(1)		Chromium		Lead		Nickel		Zinc		pH
	Avg	Max	Avg	Max	Avg	Max	Avg	Max	Avg	Max	Avg	Max	(SU)
Sulfuric Acid													
Strip/Sheet/Plate	0.0225	0.0525	0.00751	0.0225	-	-	0.000113	0.000338	-	-	0.0000751	0.000225	6.0-9.0
Rod/Wire/Coil	0.0350	0.0817	0.0117	0.0350	-	-	0.000175	0.000525	-	-	0.000117	0.000350	6.0-9.0
Bar/Billet/Bloom	0.0113	0.0263	0.00375	0.0113	-	-	0.0000563	0.000169	-	-	0.0000375	0.000113	6.0-9.0
Pipe/Tube/Other	0.0626	0.146	0.0209	0.0626	-	-	0.000313	0.000938	-	-	0.000209	0.000626	6.0-9.0
Fume Scrubber(2)	2.46	5.73	0.819	2.46	-	-	0.0123	0.0368	-	-	0.00819	0.0246	6.0-9.0
Hydrochloric Acid													
Strip/Sheet/Plate	0.0350	0.0817	0.0117	0.0350	-	-	0.000175	0.000525	-	-	0.000117	0.000350	6.0-9.0
Rod/Wire/Coil	0.0613	0.143	0.0204	0.0613	-	-	0.000307	0.000919	-	-	0.000204	0.000613	6.0-9.0
Pipe/Tube	0.128	0.298	0.0425	0.128	-	-	0.000638	0.00191	-	-	0.000425	0.00128	6.0-9.0
Absorber Vent Scrubber(3)	16.4	38.2	5.46	16.4	-	-	0.0819	0.246	-	-	0.0546	0.164	6.0-9.0
Fume Scrubber(2)	2.46	5.73	0.819	2.46	-	-	0.0123	0.0368	-	-	0.00819	0.0246	6.0-9.0
Combination Acid													
Batch - Strip/Sheet/Plate	0.0576	0.134	0.0192	0.0576	0.000767	0.00192	-	-	0.000576	0.00173	-	-	6.0-9.0
Cont. - Strip/Sheet/Plate	0.188	0.438	0.0626	0.188	0.00250	0.00626	-	-	0.00188	0.00563	-	-	6.0-9.0
Rod/Wire/Coil	0.0638	0.149	0.0213	0.0638	0.000851	0.00213	-	-	0.000638	0.00191	-	-	6.0-9.0
Bar/Billet/Bloom	0.0288	0.0671	0.00959	0.0288	0.000384	0.000959	-	-	0.000288	0.000863	-	-	6.0-9.0
Pipe/Tube	0.0963	0.225	0.0321	0.0963	0.00128	0.00321	-	-	0.000963	0.00289	-	-	6.0-9.0
Fume Scrubber(2)	2.46	5.73	0.819	2.46	0.0328	0.0819	-	-	0.0246	0.0737	-	-	6.0-9.0

(1) Oil and grease is limited only when pickling wastewater is treated in combination with cold rolling wastewater.
(2) The fume scrubber limitation which is given in kg/day is in addition to the kg/kkg limitation shown for each acid pickling subdivision.
(3) The absorber vent scrubber limitation which is given in kg/day is in addition to the kg/kkg strip/sheet/plate limitation and the kg/day fume scrubber limitation.

TABLE II-3

TREATMENT MODEL FLOWS AND EFFLUENT QUALITY
ACID PICKLING SUBCATEGORY

		30-Day Average and Daily Maximum Concentrations (mg/l)									
		BAT		BCT		NSPS		PSES		PSNS	
Subdivision	Pollutants	Avg	Max	Avg	Max	Avg	Max	Avg	Max	Avg	Max
Sulfuric Acid											
Strip/Sheet/Plate	Flow, gal/ton	180		180		40		180		40	
	TSS	-	-	30	70	30	70	-	-	-	-
	O & G(1)	-	-	10	30	10	30	-	-	-	-
	Lead	0.15	0.45	-	-	0.15	0.45	0.15	0.45	0.15	0.45
	Zinc	0.1	0.3	-	-	0.1	0.3	0.1	0.3	0.1	0.3
	pH, Units	-		6.0-9.0		6.0-9.0		-		-	
Rod/Wire/Coil	Flow, gal/ton	280		280		50		280		50	
	TSS	-	-	30	70	30	70	-	-	-	-
	O & G(1)	-	-	10	30	10	30	-	-	-	-
	Lead	0.15	0.45	-	-	0.15	0.45	0.15	0.45	0.15	0.45
	Zinc	0.1	0.3	-	-	0.1	0.3	0.1	0.3	0.1	0.3
	pH, Units	-		6.0-9.0		6.0-9.0		-		-	
Bar/Billet/Bloom	Flow, gal/ton	90		90		30		90		30	
	TSS	-	-	30	70	30	70	-	-	-	-
	O & G(1)	-	-	10	30	10	30	-	-	-	-
	Lead	0.15	0.45	-	-	0.15	0.45	0.15	0.45	0.15	0.45
	Zinc	0.1	0.3	-	-	0.1	0.3	0.1	0.3	0.1	0.3
	pH, Units	-		6.0-9.0		6.0-9.0		-		-	
Pipe/Tube/Other	Flow, gal/ton	500		500		70		500		70	
	TSS	-	-	30	70	30	70	-	-	-	-
	O & G(1)	-	-	10	30	10	30	-	-	-	-
	Lead	0.15	0.45	-	-	0.15	0.45	0.15	0.45	0.15	0.45
	Zinc	0.1	0.3	-	-	0.1	0.3	0.1	0.3	0.1	0.3
	pH, Units	-		6.0-9.0		6.0-9.0		-		-	
Fume Scrubber(2)	Flow, gpm	15		15		15		15		15	
	TSS	-	-	30	70	30	70	-	-	-	-
	O & G(1)	-	-	10	30	10	30	-	-	-	-

TABLE II-3
TREATMENT MODEL FLOWS AND EFFLUENT QUALITY
ACID PICKLING SUBCATEGORY
PAGE 2

Subdivision	Pollutants	BAT Avg	BAT Max	BCT Avg	BCT Max	NSPS Avg	NSPS Max	PSES Avg	PSES Max	PSNS Avg	PSNS Max
		30-Day Average and Daily Maximum Concentrations (mg/l)									
	Lead	0.15	0.45	-	-	0.15	0.45	0.15	0.45	0.15	0.45
	Zinc	0.1	0.3	-	-	0.1	0.3	0.1	0.3	0.1	0.3
	pH, Units	-		6.0-9.0		6.0-9.0		-		-	
Hydrochloric Acid											
Strip/Sheet/Plate	Flow, gal/ton	280		280		40		280		40	
	TSS	-	-	30	70	30	70	-	-	-	-
	O & G(1)	-	-	10	30	10	30	-	-	-	-
	Lead	0.15	0.45	-	-	0.15	0.45	0.15	0.45	0.15	0.45
	Zinc	0.1	0.3	-	-	0.1	0.3	0.1	0.3	0.1	0.3
	pH, Units	-		6.0-9.0		6.0-9.0		-		-	
Rod/Wire/Coil	Flow, gal/ton	490		490		60		490		60	
	TSS	-	-	30	70	30	70	-	-	-	-
	O & G(1)	-	-	10	30	10	30	-	-	-	-
	Lead	0.15	0.45	-	-	0.15	0.45	0.15	0.45	0.15	0.45
	Zinc	0.1	0.3	-	-	0.1	0.3	0.1	0.3	0.1	0.3
	pH, Units	-		6.0-9.0		6.0-9.0		-		-	
Pipe/Tube	Flow, gal/ton	1020		1020		110		1020		110	
	TSS	-	-	30	70	30	70	-	-	-	-
	O & G(1)	-	-	10	30	10	30	-	-	-	-
	Lead	0.15	0.45	-	-	0.15	0.45	0.15	0.45	0.15	0.45
	Zinc	0.1	0.3	-	-	0.1	0.3	0.1	0.3	0.1	0.3
	pH, Units	-		6.0-9.0		6.0-9.0		-		-	
Absorber Vent Scrubber(3)	Flow, gpm	100		100		-		100		-	
	TSS	-	-	30	70	-	-	-	-	-	-
	O & G(1)	-	-	10	30	-	-	-	-	-	-
	Lead	0.15	0.45	-	-	-	-	0.15	0.45	-	-
	Zinc	0.1	0.3	-	-	-	-	0.1	0.3	-	-
	pH, Units	-		6.0-9.0		-		-		-	

TABLE II-3
TREATMENT MODEL FLOWS AND EFFLUENT QUALITY
ACID PICKLING SUBCATEGORY
PAGE 3

		30-Day Average and Daily Maximum Concentrations (mg/l)									
		BAT		BCT		NSPS		PSES		PSNS	
Subdivision	Pollutants	Avg	Max	Avg	Max	Avg	Max	Avg	Max	Avg	Max
Fume Scrubber[2]	Flow, gpm	15		15		15		15		15	
	TSS	-	-	30	70	30	70	-	-	-	-
	O & G[1]	-	-	10	30	10	30	-	-	-	-
	Lead	0.15	0.45	-	-	0.15	0.45	0.15	0.45	0.15	0.45
	Zinc	0.1	0.3	-	-	0.1	0.3	0.1	0.3	0.1	0.3
	pH, Units	-		6.0-9.0		6.0-9.0		-		-	
Combination Acid											
Batch - Strip/Sheet/Plate	Flow, gal/ton	460		460		60		460		60	
	TSS	-	-	30	70	30	70	-	-	-	-
	O & G[1]	-	-	10	30	10	30	-	-	-	-
	Chromium	0.4	1.0	-	-	0.4	1.0	0.4	1.0	0.4	1.0
	Nickel	0.3	0.9	-	-	0.3	0.9	0.3	0.9	0.3	0.9
	pH, Units	-		6.0-9.0		6.0-9.0		-		-	
Cont. - Strip/Sheet/Plate	Flow, gal/ton	1500		1500		170		1500		170	
	TSS	-	-	30	70	30	70	-	-	-	-
	O & G[1]	-	-	10	30	10	30	-	-	-	-
	Chromium	0.4	1.0	-	-	0.4	1.0	0.4	1.0	0.4	1.0
	Nickel	0.3	0.9	-	-	0.3	0.9	0.3	0.9	0.3	0.9
	pH, Units	-		6.0-9.0		6.0-9.0		-		-	
Rod/Wire/Coil	Flow, gal/ton	510		510		70		510		70	
	TSS	-	-	30	70	30	70	-	-	-	-
	O & G[1]	-	-	10	30	10	30	-	-	-	-
	Chromium	0.4	1.0	-	-	0.4	1.0	0.4	1.0	0.4	1.0
	Nickel	0.3	0.9	-	-	0.3	0.9	0.3	0.9	0.3	0.9
	pH, Units	-		6.0-9.0		6.0-9.0		-		-	
Bar/Billet/Bloom	Flow, gal/ton	230		230		40		230		40	
	TSS	-	-	30	70	30	70	-	-	-	-
	O & G[1]	-	-	10	30	10	30	-	-	-	-
	Chromium	0.4	1.0	-	-	0.4	1.0	0.4	1.0	0.4	1.0
	Nickel	0.3	0.9	-	-	0.3	0.9	0.3	0.9	0.3	0.9
	pH, Units	-		6.0-9.0		6.0-9.0		-		-	

TABLE II-3
TREATMENT MODEL FLOWS AND EFFLUENT QUALITY
ACID PICKLING SUBCATEGORY
PAGE 4

		30-Day Average and Daily Maximum Concentrations (mg/l)									
		BAT		BCT		NSPS		PSES		PSNS	
Subdivision	Pollutants	Avg	Max	Avg	Max	Avg	Max	Avg	Max	Avg	Max
Pipe/Tube	Flow, gal/ton	770		770		100		770		100	
	TSS	-	-	30	70	30	70	-	-	-	-
	O & G(1)	-	-	10	30	10	30	-	-	-	-
	Chromium	0.4	1.0	-	-	0.4	1.0	0.4	1.0	0.4	1.0
	Nickel	0.3	0.9	-	-	0.3	0.9	0.3	0.9	0.3	0.9
	pH, Units	-		6.0-9.0		6.0-9.0		-		-	
Fume Scrubber(2)	Flow, gpm	15		15		15		15		15	
	TSS	-	-	30	70	30	70	-	-	-	-
	O & G(1)	-	-	10	30	10	30	-	-	-	-
	Chromium	0.4	1.0	-	-	0.4	1.0	0.4	1.0	0.4	1.0
	Nickel	0.3	0.9	-	-	0.3	0.9	0.3	0.9	0.3	0.9
	pH, Units	-		6.0-9.0		6.0-9.0		-		-	

(1) Oil and grease is limited only when pickling wastewater is treated in combination with cold rolling wastewater.
(2) The fume scrubber flow is in addition to the gal/ton flow shown for each acid pickling subdivision.
(3) The absorber vent scrubber flow is in addition to the gal/ton strip/sheet/plate flow and the fume scrubber flow.

TABLE II-4

EFFLUENT LIMITATIONS AND STANDARDS
ACID PICKLING SUBCATEGORY

Subdivision	Pollutants	30-Day Average and Daily Maximum Effluent Limitations and Standards (kg/kkg of Product)[1]									
		BAT		BCT		NSPS		PSES		PSNS	
		Avg	Max	Avg	Max	Avg	Max	Avg	Max	Avg	Max
Sulfuric Acid											
Strip/Sheet/Plate	TSS	-	-	2,250.0	5,250.0	500.0	1,170.0	-	-	-	-
	O & G[2]	-	-	751.0	2,250.0	167.0	500.0	-	-	-	-
	Lead	11.3	33.8	-	-	2.50	7.51	11.3	33.8	2.50	7.51
	Zinc	7.51	22.5	-	-	1.67	5.00	7.51	22.5	1.67	5.00
	pH, Units	-		6.0-9.0		6.0-9.0		-		-	
Rod/Wire/Coil	TSS	-	-	3,500.0	8,170.0	626.0	1,460.0	-	-	-	-
	O & G[2]	-	-	1,170.0	3,500.0	209.0	626.0	-	-	-	-
	Lead	17.5	52.5	-	-	3.13	9.38	17.5	52.5	3.13	9.38
	Zinc	11.7	35.0	-	-	2.09	6.26	11.7	35.0	2.09	6.26
	pH, Units	-		6.0-9.0		6.0-9.0		-		-	
Bar/Billet/Bloom	TSS	-	-	1,130.0	2,630.0	375.0	876.0	-	-	-	-
	O & G[2]	-	-	375.0	1,130.0	125.0	375.0	-	-	-	-
	Lead	5.63	16.9	-	-	1.88	5.63	5.63	16.9	1.88	5.63
	Zinc	3.75	11.3	-	-	1.25	3.75	3.75	11.3	1.25	3.75
	pH, Units	-		6.0-9.0		6.0-9.0		-		-	
Pipe/Tube/Other	TSS	-	-	6,260.0	14,600.0	876.0	2,040.0	-	-	-	-
	O & G[2]	-	-	2,090.0	6,260.0	292.0	876.0	-	-	-	-
	Lead	31.3	93.8	-	-	4.38	13.1	31.3	93.8	4.38	13.1
	Zinc	20.9	62.6	-	-	2.92	8.76	20.9	62.6	2.92	8.76
	pH, Units	-		6.0-9.0		6.0-9.0		-		-	
Fume Scrubber[3]	TSS	-	-	246,000.0	573,000.0	246,000.0	573,000.0	-	-	-	-
	O & G[2]	-	-	81,900.0	246,000.0	81,900.0	246,000.0	-	-	-	-
	Lead	1,230.0	3,680.0	-	-	1,230.0	3,680.0	1,230.0	3,680.0	1,230.0	3,680.0
	Zinc	819.0	2,460.0	-	-	819.0	2,460.0	819.0	2,460.0	819.0	2,460.0
	pH, Units	-		6.0-9.0		6.0-9.0		-		-	

TABLE II-4
EFFLUENT LIMITATIONS AND STANDARDS
ACID PICKLING SUBCATEGORY
PAGE 2

Subdivision	Pollutants	30-Day Average and Daily Maximum Effluent Limitations and Standards (kg/kkg of Product)(1)									
		BAT		BCT		NSPS		PSES		PSNS	
		Avg	Max	Avg	Max	Avg	Max	Avg	Max	Avg	Max
Hydrochloric Acid											
Strip/Sheet/Plate											
	TSS	-	-	3,500.0	8,170.0	500.0	1,170.0	-	-	-	-
	O & G(2)	-	-	1,170.0	3,500.0	167.0	500.0	-	-	-	-
	Lead	17.5	52.5	-	-	2.50	7.51	17.5	52.5	2.50	7.51
	Zinc	11.7	35.0	-	-	1.67	5.00	11.7	35.0	1.67	5.00
	pH, Units	-		6.0-9.0		6.0-9.0		-		-	
Rod/Wire/Coil	TSS	-	-	6,130.0	14,300.0	751.0	1,750.0	-	-	-	-
	O & G(2)	-	-	2,040.0	6,130.0	250.0	751.0	-	-	-	-
	Lead	30.7	91.9	-	-	3.75	11.3	30.7	91.9	3.75	11.3
	Zinc	20.4	61.3	-	-	2.50	7.51	20.4	61.3	2.50	7.51
	pH, Units	-		6.0-9.0		6.0-9.0		-		-	
Pipe/Tube	TSS	-	-	12,800.0	29,800.0	1,380.0	3,210.0	-	-	-	-
	O & G(2)	-	-	4,250.0	12,800.0	459.0	1,380.0	-	-	-	-
	Lead	63.8	191.0	-	-	6.88	20.6	63.8	191.0	6.88	20.6
	Zinc	42.5	128.0	-	-	4.59	13.8	42.5	128.0	4.59	13.8
	pH, Units	-		6.0-9.0		6.0-9.0		-		-	
Absorber Vent Scrubber(4)	TSS	-	-	1,640,000.0	3,820,000.0	-	-	-	-	-	-
	O & G(2)	-	-	546,000.0	1,640,000.0	-	-	-	-	-	-
	Lead	8,190.0	24,600.0	-	-	-	-	8,190.0	24,600.0	-	-
	Zinc	5,460.0	16,400.0	-	-	-	-	5,460.0	16,400.0	-	-
	pH, Units	-		6.0-9.0		-		-		-	
Fume Scrubber(3)	TSS	-	-	246,000.0	573,000.0	246,000.0	573,000.0	-	-	-	-
	O & G(2)	-	-	81,900.0	246,000.0	81,900.0	246,000.0	-	-	-	-
	Lead	1,230.0	3,680.0	-	-	1,230.0	3,680.0	1,230.0	3,680.0	1,230.0	3,680.0
	Zinc	819.0	2,460.0	-	-	819.0	2,460.0	819.0	2,460.0	819.0	2,460.0
	pH, Units	-		6.0-9.0		6.0-9.0		-		-	

TABLE II-4
EFFLUENT LIMITATIONS AND STANDARDS
ACID PICKLING SUBCATEGORY
PAGE 3

		30-Day Average and Daily Maximum Effluent Limitations and Standards (kg/kkg of Product)(1)									
		BAT		BCT		NSPS		PSES		PSNS	
Subdivision	Pollutants	Avg	Max	Avg	Max	Avg	Max	Avg	Max	Avg	Max
Combination Acid											
Batch - Strip/Sheet/Plate	TSS	-	-	5,760.0	13,400.0	751.0	1,750.0	-	-	-	-
	O & G(2)	-	-	1,920.0	5,760.0	250.0	751.0	-	-	-	-
	Chromium	76.7	192.0	-	-	10.0	25.0	76.7	192.0	10.0	25.0
	Nickel	57.6	173.0	-	-	7.51	22.5	57.6	173.0	7.51	22.5
	pH, Units	-		6.0-9.0		6.0-9.0		-		-	
Cont. - Strip/Sheet/Plate	TSS	-	-	18,800.0	43,800.0	2,130.0	4,960.0	-	-	-	-
	O & G(2)	-	-	6,260.0	18,800.0	709.0	2,130.0	-	-	-	-
	Chromium	250.0	626.0	-	-	28.4	70.9	250.0	626.0	28.4	70.9
	Nickel	188.0	563.0	-	-	21.3	63.8	188.0	563.0	21.3	63.8
	pH, Units	-		6.0-9.0		6.0-9.0		-		-	
Rod/Wire/Coil	TSS	-	-	6,380.0	14,900.0	876.0	2,040.0	-	-	-	-
	O & G(2)	-	-	2,130.0	6,380.0	292.0	876.0	-	-	-	-
	Chromium	85.1	213.0	-	-	11.7	29.2	85.1	213.0	11.7	29.2
	Nickel	63.8	191.0	-	-	8.76	26.3	63.8	191.0	8.76	26.3
	pH, Units	-		6.0-9.0		6.0-9.0		-		-	
Bar/Billet/Bloom	TSS	-	-	2,880.0	6,710.0	500.0	1,170.0	-	-	-	-
	O & G(2)	-	-	959.0	2,880.0	167.0	500.0	-	-	-	-
	Chromium	38.4	95.9	-	-	6.67	16.7	38.4	95.9	6.67	16.7
	Nickel	28.8	86.3	-	-	5.00	15.0	28.8	86.3	5.00	15.0
	pH, Units	-		6.0-9.0		6.0-9.0		-		-	

TABLE II-4
EFFLUENT LIMITATIONS AND STANDARDS
ACID PICKLING SUBCATEGORY
PAGE 4

		30-Day Average and Daily Maximum Effluent Limitations and Standards (kg/kkg of Product)(1)									
		BAT		BCT		NSPS		PSES		PSNS	
Subdivision	Pollutants	Avg	Max	Avg	Max	Avg	Max	Avg	Max	Avg	Max
Pipe/Tube	TSS	-	-	9,630.0	22,500.0	1,250.0	2,920.0	-	-	-	-
	O & G(2)	-	-	3,210.0	9,630.0	417.0	1,250.0	-	-	-	-
	Chromium	128.0	321.0	-	-	16.7	41.7	128.0	321.0	16.7	41.7
	Nickel	96.3	289.0	-	-	12.5	37.5	96.3	289.0	12.5	37.5
	pH, Units	-		6.0-9.0		6.0-9.0		-		-	
Fume Scrubber(3)	TSS	-	-	246,000.0	573,000.0	246,000.0	573,000.0	-	-	-	-
	O & G(2)	-	-	81,900.0	246,000.0	81,900.0	246,000.0	-	-	-	-
	Chromium	3,280.0	8,190.0	-	-	3,280.0	8,190.0	3,280.0	8,190.0	3,280.0	8,190.0
	Nickel	2,460.0	7,370.0	-	-	2,460.0	7,370.0	2,460.0	7,370.0	2,460.0	7,370.0
	pH, Units	-		6.0-9.0		6.0-9.0		-		-	

(1) The limitations and standards have been multiplied by 10^5 to obtain the values presented in this table.
(2) Oil and grease is limited only when pickling wastewater is treated in combination with cold rolling wastewater.
(3) The fume scrubber limitations/standards which are given in kg/day are in addition to the limitations/standards shown for each pickling subdivision.
(4) The absorber vent scrubber limitations/standards which are given in kg/day are in addition to the strip/sheet/plate limitations/standards and the fume scrubber limitations/standards.

ACID PICKLING SUBCATEGORY

SECTION III

INTRODUCTION

General Discussion

Acid pickling is the steel finishing process in which steel products are immersed in heated acid solutions to remove surface scale. The Agency has divided the acid pickling subcategory into three subdivisions which are based upon the type of acid solutions used in the process. These subdivisions are further segmented by product type to account for the differing wastewater discharge rates and to separately account for the wastewaters discharged from fume scrubbers:

1. Sulfuric Acid Pickling
   a. Strip, Sheet and Plate Products
   b. Rod, Wire and Coil Products
   c. Bar, Billet and Bloom Products
   d. Pipe, Tube and Other Products
   e. Fume Scrubbers

2. Hydrochloric Acid Pickling
   a. Strip, Sheet and Plate Products
   b. Rod, Wire and Coil Products
   c. Pipe, Tube and Other Products
   d. Fume Scrubbers
   e. Absorber Vent Scrubbers

3. Combination Acid Pickling
   a. Strip, Sheet and Plate Products - Batch
   b. Strip, Sheet and Plate Products - Continuous
   c. Rod, Wire and Coil Products
   d. Bar, Billet and Bloom Products
   e. Pipe, Tube and Other Products
   f. Fume Scrubbers

Wastewaters are generated by three major sources in pickling operations. The largest source is the rinsewater used to clean the acid solution from the product after it has been immersed in the pickling solution. The second source is the spent pickle liquor, which is the acid solution that has become too weak to continue to treat the steel products. The spent pickle liquor is a small volume waste which is very acidic and contains high concentrations of iron and toxic metal pollutants. It is commonly discharged on an intermittent basis. Wastewater from wet fume scrubbers is the third source. However, not all plants have wet fume scrubbers. For hydrochloric acid regeneration plants, absorber vent scrubber wastewater is a source of contamination similar in nature to that of pickle rinsewater. Unlike rinsewater and spent pickle liquor, the

discharges from these scrubbers are not related to production rate or product type.

This report discusses the wastewater characteristics and treatment systems applicable to pickling operations and the effluent limitations and standards for those discharges.

Data Base

1. Sulfuric Acid Pickling

The effluent limitations originally promulgated in 1976 for sulfuric acid pickling operations were primarily based upon data obtained through field sampling at fifteen sulfuric acid pickling operations. This present study included field sampling at ten sulfuric acid operations, as well as a review of wastewater treatment systems installed at all sulfuric acid pickling operations surveyed through the DCPs. The Agency received responses to the DCPs for plants which comprise about 85% of the annual industry-wide capacity. A summary of all sulfuric pickling operations responding to the DCPs is presented in Table III-1.

The Agency, after reviewing and analyzing the DCP responses provided by the industry, forwarded detailed DCPs (D-DCPs) to selected pickling operations. Those D-DCPs requested cost and monitoring data from eighteen operations. The operations included three plants which were sampled during the initial survey.

A summary of the data base is presented in Table III-4. The field sampling covered 11% of the sulfuric acid pickling plants in operation, which have 34% of the annual capacity of the industry.

2. Hydrochloric Acid Pickling

The effluent limitations originally promulgated in 1976 for hydrochloric acid pickling operations were primarily based upon data obtained through field sampling at fourteen operations. During this study, the Agency conducted field sampling at two of the same plants and at seven additional operations. In addition, the Agency reviewed wastewater treatment systems used at all plants surveyed through DCPs. The Agency also sent D-DCPs to thirteen plants (two of which had been previously sampled), which comprise 13% of the industry capacity, requesting cost and effluent data. A summary of the data base is presented in Table III-5. The field sampling covered about 21% of the annual pickling capacity. Table III-2 provides a general summary of available data on hydrochloric acid pickling operations.

3. Combination Acid Pickling

The originally promulgated limitations for the combination acid pickling subcategory were primarily based upon data obtained through field sampling at eight operations. As part of this study, the Agency sampled six additional plants. The Agency conducted sampling at one plant twice, and the data collected during each visit are presented in this report. However, only the data gathered during the later visit have been used in establishing the limitations. The updated data base for the combination acid pickling subdivision is shown in Table III-6.

The Agency received responses to the DCPs from one hundred twenty-nine combination acid pickling operations. The data received from these plants are summarized in Table III-3.

The Agency sent D-DCPs to selected combination acid pickling operations to gather information regarding plant operations and long-term effluent quality and cost information for wastewater treatment systems. The Agency received responses from five combination acid pickling operations.

Table III-7 summarizes the pickling operations sampled for this study and describes those operations.

Description of Pickling Operations

During steel forming and finishing operations, the steel product is exposed to the atmosphere, causing oxide scale to form on its surface. This scale must be removed prior to further processing. Proper surface preparation is essential for the satisfactory application of protective coatings to steel, and for producing cold rolled products free of surface defects.

The traditional method of removing scale is called "acid pickling," or simply "pickling." Pickling is accomplished by immersing the steel product in a heated acid solution. While pickling is only one of several methods for removing undesirable oxides from the steel surface, it is the most widely used in the steel industry because of its comparatively low operating cost and ease of operation. Hydrochloric acid or sulfuric acid solutions are usually used for pickling carbon steel products, while more than one acid is used for pickling operations for specialty steels. Typically, nitric and hydrofluoric acids are used together, although the acid combinations vary with the type of material pickled. The bath temperature, use of inhibitors, and agitation also vary depending upon the material pickled. Pickling is accomplished in both batch and continuous operations.

Temperature, agitation, and acid and iron concentration of the acid baths are important operating factors in the pickling process.

Temperature

The temperature of the acid bath affects the rate of reaction. Typically, the acid bath is heated directly by injecting steam into the bath or indirectly through the use of heat exchangers. With direct heating, the steam injected into the bath condenses into water resulting in dilution of the acid solution and an increase in the volume of spent pickle liquor that must be disposed of or treated. The indirect heating method avoids these disadvantages, since no additional water is introduced. The heat exchangers can be located internal or external to the bath.

Agitation

Agitation provides for even and rapid pickling. The speed of the pickling process can be increased significantly by agitating the acid bath, or by moving the steel during the pickling operation. The latter may be accomplished by raising and lowering the bundle of steel in the bath. Agitating the acid bath is more complex. One method includes a custom designed, air-operated, mechanical agitator. An added benefit of this system is that the evaporation (caused by air agitation) concentrates, rather than dilutes, the acid bath. The induced evaporation requires that pickling acids be added to maintain the proper level of acid in the bath. The acid mists caused by the agitation system can be collected in a suitable exhaust system and returned to the pickle tank for reuse.

Acid and Iron Concentration

The concentrations of acid and ferrous salts in the bath also affect the rate of reaction. Most pickling operations do not have facilities to maintain constant acid strengths. As products are processed over a period of time, the free acid content of the bath progressively diminishes, which in turn results in increasingly longer pickling times. As the strength of the acid drops below a certain level, the spent pickle liquor is removed and replaced with fresh acid. At some plants the strength of the acid baths are maintained at relatively constant levels through the use of acid recovery or acid regeneration technologies. In such operations, the acid solution is continually bled from the bath, as fresh acid is added to maintain the bath at a constant strength. The waste acid is then recovered or regenerated and fed back to the bath. This practice increases the efficiency of the pickling operation.

<u>Type of Pickling</u>

A. Batch Pickling

Batch pickling is used principally for processing rods, bars, billets, plate, coiled sheet, strip, coiled wire, and tubing. Large, open tanks which vary widely in size, are used for these operations. The tanks are generally rubber lined and brick sheathed and hold large volumes of heated acid solution. Bundles

of products are immersed in the acid bath for a period of time necessary to remove the scale from the product surfaces. Following immersion in the acid bath, the product is rinsed with water either in tanks similar to those used for pickling, or by manual spraying with hoses. After continual use, the free acid content decreases, and iron builds up in the acid solution due to the scale removed. When the strength of the bath is reduced, the acid solution is considered spent and is dumped as a batch. Flow schematics for carbon and specialty batch pickling operations are presented in Figures III-1 and III-2.

B. Continuous Pickling

Strip and wire products are pickled in continuous pickling operations. Pickling is usually conducted in horizontal pickling tanks. In a few cases, vertical spray tanks are used. The product is pickled as it is continuously drawn through the acid bath and is rinsed with water in a tank or a series of tanks. The rinsing is performed by drawing the product through a water bath, a series of sprays, or combinations thereof. In countercurrent pickling systems, at least two acid tanks are used in series, with each one divided into four or five compartments. Fresh acid solution is added to the last pickling tank section and cascades through the series of tanks to an overflow located in the first tank. The acid solution flows in the direction opposite to that in which the steel product travels. Countercurrent or cascade rinsing of the pickled product is performed in the same manner. Flow schematics for carbon and specialty continuous acid pickling operations are presented in Figures III-3 and III-4.

Description of Wastewater Sources

As noted earlier, there are three principal sources of wastewaters associated with a pickling process. The most contaminated source is the spent pickle liquor, which is the waste acid solution. The source of the largest volume is the water used for rinsing the pickled product. The third source is the water used for scrubbing the acid vapors and mists, which are drawn from the pickling area through hoods installed over the acid baths.

Pickling

As discussed previously, the strength of the pickle liquor progressively diminishes as more and more products are pickled. When the strength reaches a certain level, the spent pickle liquor is discarded. Contract hauling of the spent pickle liquor is commonly practiced at many plants. Alternatively, the spent pickle liquor may be treated along with other wastewaters from the pickling operation, or it may be recovered (sulfuric and hydrochloric acid) for reuse in the pickling operation. Spent sulfuric or hydrochloric acid may also

be used as a coagulant for municipal or industrial wastewater treatment.

Rinsing

The rinsing operation may vary from a one-step dunk or spraying to more sophisticated multi-stage rinsing with cascade rinsing. The primary purpose of the rinse is to remove contaminants from the steel product prior to the next finishing process. In a single step rinsing operation, the tanks may be replenished and dumped on a periodic basis, or fresh water may be continually added at the end of the tank, while wastewater discharges at the opposite end. Where rinsing is performed in a series of tanks, the first rinse removes the bulk of the contaminants from the product, which results in a highly contaminated waste stream. The subsequent rinse tanks are progressively cleaner. The product emerges from the final tank free of contaminants. Each tank may discharge separately. Where a series of tanks is installed, a common practice is to cascade the rinsewaters from the final to the first tank. Fresh make-up water is added to the final tank, which in turn overflows to the previous tank. The rinsewater continues in this fashion to the first tank, from which discharge occurs. The volume of rinsewater from cascade rinse systems is considerably less than the volume from conventional single tank rinsing.

Many pickling operations continue to employ the traditional approach to rinsing: flooding the strip with large volumes of water to wash away the few gallons of acid that are dragged out of the pickling tanks with the product. In the past, this was a practical approach to the problem, because it effectively cleaned the strip and diluted the acid content of the rinsewater to low levels. The rinse water was then usually discharged. An alternative to the traditional method is the cascade rinse system described above. The dilution rate, from one tank section to the next, follows a geometric progression, so that the number of stages determines the amount of clean water that must be fed into the system to achieve a given degree of rinsing and product quality. For instance, a typical, large, high-speed pickle line with a five-stage system could operate with a discharge of about 20 gpm (single-stage systems discharged wastewaters in excess of 100 gpm) without adversely affecting product quality. The treatment of rinse waters at such low rates of flow is less costly than the treatment of the large volumes from single-stage systems. The rinsewaters can be further concentrated and recovered or regenerated with the waste pickle liquor, or they may be used as makeup for the solution in the pickling tanks.

Multi-stage countercurrent rinsing systems can easily be incorporated into new pickling lines. These systems have also been retrofitted at existing pickling lines that are not constrained by space limitations. While cascade rinsing has been installed at many pickling operations, the Agency does not believe it is feasible to implement this technology at all existing pickling operations because of space limitations and other site-specific retrofit problems. The Agency has

also recently become aware of a high pressure/high temperature spray rinsing system that is capable of reducing the volume of rinsewater while simultaneously improving the efficiency of rinsing. The limited information available to the Agency indicates that this rinsing system is inexpensive and can be readily retrofitted at existing continuous pickling lines. However, the information available to the Agency at this time is insufficient for the purpose of developing effluent limitations and standards based upon this technology.

Fume Scrubbing

The acid fumes generated in the pickling process must be removed to provide a safe working environment and minimize corrosion of appurtenant structures. However, the fumes from some existing exhaust systems are discharged directly to the atmosphere. Both water scrubbing and filtration are used to remove acid from the fumes.

In wet scrubbing systems, the fumes are sprayed with water in spray chambers or packed beds. This scrubber water is contaminated with acid removed from the fumes and requires treatment similar to that provided for rinsewaters. At some operations, the scrubber waters are recycled to minimize the pollutant loads from this source. The fume scrubber blowdown at one plant is used as makeup to the cold rinse sections of the pickling operation.

Acid mist filters are specially designed synthetic fibers installed in filter boxes located at the discharge end of the fume exhaust system. This unit filters the acid from the fumes and returns it to the pickling tanks. The water vapor in the fumes is allowed to pass through the filters. The acid mist filter controls air pollution and simultaneously recovers acid for reuse in the pickle tank with no discharge of wastewaters.

Acid Recovery and Acid Regeneration

Acid recovery and regeneration are used for sulfuric acid and hydrochloric acid, respectively. Refer to Section VII for detailed discussions of these processes. Figures III-5 through III-9 in this section illustrate some of the basic processes available at this time. Although the Agency is not aware of installations within the United States, the technology for the recovery of nitric and hydrofluoric acids has apparently been developed and is operated in the People's Republic of China.

Combination Acid Pickling Operations

A. Specialty Steel Pickling

Depending upon the type of steel processed and the surface quality desired, different acids and acid combinations are used. About 80% of the combination acid pickling operations are specialty steel lines.

Sulfuric, hydrochloric, nitric, and hydrofluoric acids are used in various combinations to pickle specialty steels. Most operations use either sulfuric or hydrochloric acid at the head of the pickle line to soften and loosen the scale and then use either nitric, hydrofluoric, or a mixture of these two acids to remove the scale loosened by the first acid solution. The acid in the first batch is kept at a concentration of about 10%, if sulfuric acid is used, and 15%, if hydrochloric acid is used. In addition, the acid bath is heated to approximately 70°C (160°F) to increase the action of the pickling solution. The acids in the second tank are usually kept at lower concentrations (i.e., 4% HF, 10% HNO_3), but at the same temperature as the first bath.

B. Carbon Steel Pickling

Several carbon steel operations use a combination acid process; usually phosphoric acid in combination with either hydrochloric or sulfuric acid. One operation uses nitric acid in combination with hydrochloric acid to pickle wire and rods.

Although different acid combinations are used to pickle carbon steel, the Agency found that both average flow rates and wastewater characteristics are similar to those for specialty steel operations. For that reason the Agency has established one set of limitations and standards for both operations.

TABLE III-1

SULFURIC ACID PICKLING SUMMARY TABLE

Plant Code No.	Line No.	Process Product	Process Mode	Capacity (Tons/Day)	1st Year Production	Applied Flow (Gallons/ton) Rinses	Applied Flow Scrubber	Applied Flow Conc.	Discharge Flow (Gallons/ton) Rinses	Discharge Flow Scrubber	Discharge Flow Conc.	Treatment Components	Discharge Mode
0020B	01	Sheet, Specialty	Cont.	801	1954	539	90	6.4	539	90	6.4(1)	VF,CR,NL,FLP,CL, CNT,OT	Direct
0048B	01(a)	Bar Wire	Batch	243	1944	Unk	-	Unk	Unk(1)	-	Unk(1)	OT, None	Hauled
0048C	01(a)	Bar Wire	Batch	180	1940	58.3	-	20.0	58.3	-	20.0(1)	NL,SL,OT	Direct
0048D	01(a)	Bar	Batch	90	1909	Unk	-	Unk	Unk	-	Unk	NL,VF,SL,CNT,OT	POTW
	02(a)	Wire	Batch	26	1900	Unk	-	Unk	Unk	-	Unk	NL,VF,CNT,OT	POTW
0048F	01(a)	Bar Wire	Batch	117	1944	37	-	Unk	37	-	Unk	VF,NL,SL,OT	POTW
0060C	01(a)	Bar Bloom Pipe	Batch	63	1956	Unk	-	8	Unk	-	8(1)	FLP,SSP,SS,CNT,OT	Direct
0060D	01	Strip, Specialty	Cont.	960	1957	Unk	Unk	Unk	Unk	Unk	Unk		Direct
	02	Strip, Specialty	Cont.	120	1952	Unk	168	Unk	Unk	Unk	Unk	NL,SL,CNT,AE	Direct
	03	Strip, Specialty	Cont.	114	1959	Unk	Unk	Unk	Unk	Unk	Unk	RT	Direct
0060G	*	*	*	*	*	*	*	*	*	*	*	*	*
0060M	01(a)	Rod Wire	Batch	816	1970	14.7	-	1.1	6.9	-	1.1(1)	FDSP,NL,DW,RT	POTW
0060S	*	*	*	*	*	*	*	*	*	*	*	*	*
0068	+01(a)	Bar, Strip	Batch	94	1934	769	-	70	769	-	70	OT, None	POTW
	02(a)	Rod	Batch	381	1937	162	Unk	27.6	162	Unk	27.6	AU(Conc only)	POTW
0088A	01(a)	Bar	Batch	744	1942	<1	-	8.1	<1(1)	-	8.1(1)	OT, None	Hauled
	02	Tube, Specialty	Batch	244	1936	49.2	-	22.6	49.2	-	22.6(1)	CR,NL,FLP,CL,	Direct
	03(a)	Tube	Batch	519	Unk	430	-	14.6	430	-	14.6(1)	T,VF,SS,E,CNT	Direct
	04	Tube, Specialty	Batch	246	1946	117	-	16.3	117	-	16.3(1)	CNT,	Direct
	05	Tube, Specialty	Batch	87	1941	138	-	42.1	138	-	42.1(1)		Direct
0088B	*	*	*	*	*	*	*	*	*	*	*	*	*
0088D	01(a)	Bar	Batch	717	1952	2.1	-	14.2	2.1	-	14.2(1)	NL,FLP,CL,SS,VF, CNT,OT	Direct
	02	Tube, Specialty	Batch	52	1969	2775	-	Unk	2775	-	Unk(1)	E,NC,FDSP,OT	Direct
0112	01	Billet, Specialty	Batch	507	1922	1.1	-	22.6	1.1(1)	-	22.6(1)		Hauled
	02	Flat Bar Specialty	Batch	53.1	1928	231	-	33.9	231	-	33.9(1)	NL,OT	Direct
0112A	01(a)	Pipe	Batch	237	1929	Unk	-	Unk	Unk	-	Unk(1)		Direct
	02(a)	Plate Sheet	Batch	792	1948	Unk	-	4.5	Unk	-	4.5(1)		Direct
	03(a)	Strip	Cont.	1692	1937	149	Unk	17	149	Unk	17(1)		Direct
	04(a)	Strip	Cont.	2496	1957	136	23	14.4	136	23	14.4(1)		Direct
	05(a)	Sheet	Cont.	1197	1945	143	Unk	18	143	Unk	18(1)		Direct
	06(a)	Sheet	Cont.	1875	1951	Unk	Unk	29.2	0	Unk	29.2(1)	SS,SCR,NL,	Direct
	07(a)	Sheet	Cont.	1875	1951	143	Unk	8.4	143	Unk	8.4(1)	FLA,FLP,AE,	Direct
	08(a)	Strip	Cont.	1032	1963	338	16.7	27.9	338	Unk	27.9(1)	SL,T,CY,CNT	Direct
	09(a)	Strip	Cont.	Est 840	1966	418	20.6	30.5	418	Unk	30.5(1)	(Line 6 cc)	Direct
	10(a)	Strip	Cont.	Est 180	1956	80	-	34.7	80	-	34.7(1)	(Line 11 Recycle)	Direct
	11(a)	Strip	Cont.	864	1970	170	16.7	11.7	20.4	16.7	11.7(1)		Direct
	12(a)	Strip	Cont.	Est 180	1957	80	-	34.7	80	-	34.7(1)		Direct
	13(a)	Strip	Cont.	Est 180	1958	80	-	34.7	80	-	34.7(1)		Direct

TABLE III-1
SULFURIC ACID PICKLING SUMMARY TABLE
PAGE 2

Plant Code No.	Line No.	Process Product	Process Mode	Capacity (Tons/Day)	1st Year Production	Applied Flow (Gallons/ton) Rinses	Applied Flow Scrubber	Applied Flow Conc.	Discharge Flow (Gallons/ton) Rinses	Discharge Flow Scrubber	Discharge Flow Conc.	Treatment Components	Discharge Mode
0112B	01(a)	Billet	Batch	Est 31	1948	Unk	-	Unk	Unk	-	Unk(1)	NU,OT	Direct
0112C	01(a)	Bar Plate Auto Section	Batch	261	1926	Unk	-	22.1	Unk	-	22.1	NC,SSP,FDSP,	Direct
	02(a)	Square Billet	Batch	1611	1928	Unk	-	8.9	Unk	-	8.9	T,SS,CT,AE,	Direct
	03(a)	Square Billet	Batch	942	1930	Unk	-	9.9	Unk	-	9.9	OT	Direct
0112D	01(a)	Black Plate	Cont.	1156	1966	Unk	16.2	Unk	Unk	Unk	Unk	SS,CR,FLP,NL, NW,CL,CNT,OT	Direct
0112F	01	Billet,Specialty	Batch	588	1960	2.6	-	2.6	2.6	-	2.6	NC,OT	POTW
	02(a)	Rod Wire	Batch	239	1948	Unk	-	Unk	Unk	-	Unk	NU,CNT,OT	POTW
0112G	01(a)	Wire	Batch	39	1929	Unk	-	Unk	Unk	-	Unk	NC,CNT,OT	POTW
	02(a)	Fastener	Batch	5.2	1952	Unk	-	Unk	Unk	-	Unk		POTW
0112I	01(a)	Fastener	Batch	3.6 [4.2]	1955	[6800]	-	10.5	[6800]	-	10.5	NL,NW,T,FDSP, SL,SS,CNT,OT	(POTW)
	02(a)	Bar Rod Plate Washer	Batch	146 [144]	1970	[602]	-	20.5	[602]	-	20.5	SL,NL,NW	(POTW)
	03(a)	Fastener	Batch	65 [73]	1922	[1728]	-	14.8	[1728]	-	14.8	CNT,OT	(POTW)
	04(a)	Slug Coupling	Batch	44	1973	Unk	-	25.9	Unk	-	25.9	NL,NW,FDS,P	(POTW)
	05(a)	Fastener	Batch	138	1956	604	-	33.7	604	-	33.7	T,SS,SL,AE,	(POTW)
	06(a)	Rod Angle	Batch	16	1962	Unk	-	110	Unk	-	110	CNT,OT	(POTW)
	07(a)	Wire	Batch	282	1950	Unk	-	22.3	0	-	0	OT,AU	Direct
0176	01	Wire, Specialty	Batch	60	1969	724	-	Unk	724	-	Unk(1)	NW,NAL,NC,SL,PSP,	Direct
	02	Strip,Specialty	Cont.	10.2	1963	847	706	Unk	847	706	Unk	SSP,T,SS,CY,CR, CO,CLA,EB,FLP,CL, CNT,OT	Direct
0196A	*	*	*	*	*	*	*	*	*	*	*	*	*
0240A	01	Bar Billet, Specialty	Batch	585	1942	Unk	-	Unk	Unk	-	Unk	NL,SL,OT	Direct
0240B	01(a)	Bar Tube	Batch	687	1919	62.9	-	10.5	62.9	-	10.5	NL,NW,T,SS,SL, AE,VF,CNT	Direct
0240C	01(a)	Tube	Batch	102	1973	Unk	1059	3.8	Unk(1)	0	3.8(1)	None	Hauled
0248A	01	Bar,Specialty	Batch	192	1912	Unk	-	Unk	Unk(1)	-	Unk(1)	None	Hauled
	02	Bar,Specialty	Batch	1275	1912	Unk	-	Unk	Unk(1)	-	Unk(1)	None	Hauled
	03	Bar,Specialty	Batch	900	1912	Unk	-	Unk	Unk(1)	-	Unk(1)	None	Hauled
0256A	01(a)	Strip	Cont.	414	1941	209	83.5	9.7	209	83.5	9.7(1)	NC,OT	POTW
0256B	01(a)	Strip	Cont.	423	1949	425	425	15	0	425	15	NL,OT,SL	Direct
0256C	01(a)	Strip	Cont.	1469	1955	29.4	-	11.0	29.4(1)	-	11.0(1)	None	Hauled
	02(a)	Strip	Cont.	1469	1960	29.4	-	11.0	29.4(1)	-	11.0(1)	None	Hauled
0256F	01(a)	Tube	Batch	75	1953	960	-	4	960	-	4(1)	FLL,FLA,FLP,NL, NAL,CNT,OT,NA,SB	Direct
0256G	01(a)	Tube Pipe	Batch	471	1940's	107	-	18.0	0	-	18.0(1)	NL,ReT, SB	Hauled
0264	01(a)	Rod	Batch	161	1957	382	-	17.1	382	-	17.1	IX,NAM,ReT	POTW

TABLE III-1
SULFURIC ACID PICKLING SUMMARY TABLE
PAGE 3

Plant Code No.	Line No.	Process Product	Process Mode	Capacity (Tons/Day)	1st Year Production	Applied Flow (Gallons/ton) Rinses	Applied Flow Scrubber	Applied Flow Conc.	Discharge Flow (Gallons/ton) Rinses	Discharge Flow Scrubber	Discharge Flow Conc.	Treatment Components	Discharge Mode
0264C	01(a)	Rod	Batch	153	1969	589	-	11.8	589	-	11.8	NAM,CL	POTW
0264D	01(a)	Rod	Batch	284	1966	446	-	13.6	446	-	13.6(1)	CNT,NAM,CL,CC	POTW
0384A	01	Billet Bar, Specialty	Batch	261	1939	1379	-	1.4	1379	-	1.4(1)	DW,SL,SS,CN,OT	Direct
	02	Bar Coil, Specialty	Batch	240	1969	180	1200	2.5	120	156	2.5	FLW,CT,DW,FLL, FLA,SS,FLP,CNT, ReT,RFHS	Direct
	03(a)	Strip	Cont.	84	1958	4114	-	51.4	4114	-	51.4(1)	DW,SS,SL,CNT,OT	Direct
0396E	01(a)	Strip	Cont.	900	1953	320	Dry	32	320	Dry	32(1)	OT	Direct
	02	Sheet,Specialty	Batch	179	1970	Unk	Dry	44.2	80.4	Dry	44.2(1)	OT,CC	Direct
0432A	01(a)	Strip	Cont.	2088	1947	115	Dry	14.5	115	Dry	14.5(1)	FT,SS,E,NL,NC,	Direct
	02(a)	Pipe	Batch	254	1930	Unk	-	26	Unk	-	26(1)	FLP,VF,CL,T,	Direct
	03(a)	Bloom	Batch	801	1927	Unk	-	25.1	Unk	-	25.1(1)	CNT,OT	Direct
	04(a)	Bar Rod Wire	Batch	750	1945	Unk	-	19.2	Unk	-	19.2(1)	(Line 1 CC)	Direct
0432B	+01(a)	Strip	Cont.	1686	1936	427	Unk	17	427	Unk	17(1)	NL,OT	Direct
0432E	01(a)	Tube	Batch	30	1942	1200	-	3.3	1200	-	3.3(1)	None	POTW
0432L	01(a)	Strip	Cont.	323	1949	60.2	1115	12.8	60.2	111.5	12.8(1)	OT, None	Direct
0432M	01(a)	Strip	Cont.	307	1954	469	234	7.8	469	234	7.8(1)	OT, None	Direct
0460A	01(a)	Rod Wire	Batch	699	1917	824	-	25.8	824	-	25.8	AE,PSP,NL,	Direct
	02(a)	Rod Wire	Batch	138	1939	4174	-	47.8	4174	-	47.8	FLP,CL,SL,	Direct
	03(a)	Rod Wire	Batch	444	1958	973	-	27.0	973	-	27.0	CNT,OT	Direct
0460C	01(a)	Rod	Batch	105	1965	427	-	12.5	427	-	12.5(1)	NL,CL,OT	POTW
0460D	01(a)	Rod Wire	Batch	239	1927	182	-	28.9	182	-	28.9	FLP,NL,VF,T, CL,CNT,OT	Direct
0460E	01(a)	Rod Wire	Batch	180	1947	283	-	13.3	283	-	13.3(1)	FDSP,NL,NC,NA FLP,OT	Direct
0460F	01(a)	Rod Wire	Batch	28	1965	261	-	32.6	261	-	32.6	NL,CNT,OT	POTW
0460G	01(a)	Rod Wire	Batch	225	1968	227	-	22.7	227	-	22.7	SL,NW,CNT,OT	POTW
0460H	01(a)	Rod	Batch	94	1920	535	306	27.7	535	0	27.7(1)	OT,None	POTW
0476A	01(a)	Rod Strip Angle	Batch	70	1930	414	-	12.9	414	-	0	SCR,SS,NL,AE,OT,	Direct
	02(a)	Pipe Tube	Batch	180	1930	91	-	50.0	91	-	0	CL,FLP,VF,	Direct
	+03(a)	Strip	Cont.	127	1948	283	226	11.3	283	226	0	CNT,E,AU,	Direct
0492A	01(a)	Pipe	Batch	186	1962	1355	-	32.3	1355	-	32.3	NW,SL,O,T	Direct
	02(a)	Tube	Batch	288	1970	2086	-	15.6	2086	-	15.6	CNT	Direct
0528A	01(a)	Strip	Cont.	783	1949	64.4	43	48.4	64.4	43	48.4(1)	VF,FLL,FLP,FDSP,	Direct
	02(a)	Strip	Cont.	2577	1954	19.6		14.7	19.6		14.7(1)	IX,NL,Scr,CL,CT, FHS,T,SS,SSP,SL, CNT,OT	Direct
0548	01(a)	Tube	Batch	23	1927	853	-	8.9	853	-	8.9	NL,SL,	Direct
	02(a)	Tube	Batch	204	1945	961	847	9.0	509	847	9.0	CNT,(Lines	Direct
	03(a)	Tube	Batch	186	1953	839	-	9.0	839	-	9.0	01,03,04,OT)	Direct
	04(a)	Tube	Batch	51	1966	847	-	9.1	847	-	9.1	(Line 02,RTP)	Direct
0548B	01(a)	Tube	Batch	44	1947	649	-	27.0	649	-	27.0(1)	CNT,OT	POTW

TABLE III-1
SULFURIC ACID PICKLING SUMMARY TABLE
PAGE 4

Plant Code No.	Line No.	Process Product	Process Mode	Capacity (Tons/Day)	1st Year Production	Applied Flow (Gallons/ton) Rinses	Applied Flow Scrubber	Applied Flow Conc.	Discharge Flow (Gallons/ton) Rinses	Discharge Flow Scrubber	Discharge Flow Conc.	Treatment Components	Discharge Mode
0580	01(a)	Wire	Cont.	0.9	1960	4000	-	16.7	4000	-	16.7	OT, None	POTW
	02(a)	Wire	Cont.	2.4	1965	1875	-	31.3	1875	-	31.3	OT, None,CC	POTW
	03	Wire,Specialty	Cont.	0.6	1965	10000	-	20.0	10000	-	20.0	OT, None,CC	POTW
0580C	01(a)	Strip	Cont.	45	1955	1184	-	10.4	1184	-	10.4(1)	NL,CNT,ReT	POTW
0584C	01(a)	Sheet Plate	Batch	462	1920	62.3	-	9.7	62.3	-	9.7(1)	SS,SL,CLB,FDSP,	Direct
0584E	01(a)	Sheet	Cont.	4458	1961	Unk	Unk	15.8	Unk	Unk	15.8	FLL,FLP,NL,IX CL,SL,CNT,BO,CR GF,CO,DW,EB,SS, CNT,CC	Direct
0612	01(a)	Rod	Batch	853	1963	182	-	3.5	182	-	3.5	NL,CO,FLP,CL VF,FDSP,CNT,ReT,E	Direct
0636	01(a)	Tube Bar	Batch	Unk	1943	Unk	-	Unk	Unk	-	Unk	NAM,CNT	POTW
	02(a)	Tube Bar	Batch	Unk	1943	Unk	-	Unk	Unk	-	Unk		POTW
0640	01(a)	Rod	Batch	738	1917	898	-	27.6	898	-	27.6	NL,CL,T,SL,CNT,OT	Direct
	02(a)	Wire	Batch	20	1953	8288	-	7.6	8288	-	7.6	CNT,VF,OT	Direct
0684C	+01(a)	Strip	Cont.	1014	1937	284	142	21.3	284	142	21.3(1)	NW,CNT,OT	Direct
0684D	01	Bloom Billet Round,Specialty	Batch	Inactive	Unk	Unk	-	Unk	Unk	-	Unk(1)	SS,SL,CNT	Direct
	02	Round Flat Billet Specialty	Batch	Est 348	1924	8.3	-	8.9	8.3	-	8.9(1)	OT	Direct
	03	Round Square, Specialty	Batch	Est 930	1952	12.2	-	8.9	12.2	-	8.9(1)	OT	Direct
0684E	01	Bloom Billet, Specialty	Batch	Est 459	1939	15.7	-	17.5	15.7	-	17.5(1)	OT,None	Direct
	02	Bar,Specialty	Batch	Est 123	1939	Unk	-	Unk	0	-	17.5(1)	SL,SS,CNT,ReT	Direct
	03	Bar Coil, Specialty	Batch	Est 528	1939	Unk	-	17.5	0	-	17.5(1)		Direct
	04	Bar Billet, Specialty	Batch	Est 525	1942	41	-	17.5	41	-	17.5(1)		Direct
0684G	01(a)	Billet	Batch	663	1929	54.3	-	3.5	54.3	-	3.5(1)	PSP,NW,NL,FLP, SS,CL,VF,CNT,OT	Direct
	02(a)	Bar Shape	Batch	483	1950	74.5	-	11.9	74.5	-	11.9(1)	PSP,NW,NL,FLP, FLL,CNT,OT	Direct
0684H	01(a)	Bar Rod	Batch	316	1960	913	-	25.3	913	-	25.3(1)	CNT,CL,NL,FLL, FLP,VF,CNT,(Line 01 OT)	Direct
	02(a)	Bar Rod Wire	Batch	320	1957	449	-	Unk	449	-	Unk(1)		Direct
0684K	*	*	*	*	*	*	*	*	*	*	*	*	*
0684N	*	*	*	*	*	*	*	*	*	*	*	*	*
0684P	01(a)	Bar	Batch	405	pre-1900	Unk	Dry	Unk	Unk(1)	Dry	Unk(1)	OT, None,ARF	Hauled
	02(a)	Wire	Batch	198	pre-1900	Unk	Dry	Unk	Unk(1)	Dry	Unk(1)	OT, None,ARF	Hauled
	03(a)	Bar	Batch	43	pre-1900	Unk	Dry	Unk	Unk(1)	Dry	Unk(1)	OT, None,ARF	Hauled
0684Q	01(a)	Bar	Batch	372	pre-1930	193.5	-	24.6	193.5	-	24.6(1)	VF,FLP,NL,CL,OT	Direct
0684V	01(a)	Plate	Batch	150	Unk	164	-	2.1	164	-	2.1(1)	OT, None	Direct
0684Y	*	*	*	*	*	*	*	*	*	*	*	*	*

TABLE III-1
SULFURIC ACID PICKLING SUMMARY TABLE
PAGE 5

Plant Code No.	Line No.	Process Product	Process Mode	Capacity (Tons/Day)	1st Year Production	Applied Flow (Gallons/ton) Rinses	Applied Flow (Gallons/ton) Scrubber	Applied Flow (Gallons/ton) Conc.	Discharge Flow (Gallons/ton) Rinses	Discharge Flow (Gallons/ton) Scrubber	Discharge Flow (Gallons/ton) Conc.	Treatment Components	Discharge Mode
0728	01(a)	Pipe	Batch	75	1951	288	-	7.8	0(1)	-	7.8(1)	SSP,NL,SL,CT,CNT	Hauled
0760	01(a)	Strip	Cont.	[483]	1958	11.6	-	[7.2]	[3.9]	-	[0] 4.3(2)	VF,CY,CNT,AU	POTW
0776D	*	*	*	*	*	*	*	*	*	*	*	*	*
0792B	01(a)	Strip	Cont.	480	1966	18.0	-	12.0	0	-	0	AU,VS,CC	Zero Discharge
0792C	01(a)	Strip	Cont.	486	1968	128	237	39.0	128	Unk	39	FLO,NC,CNT,OT	POTW
0796A	*	*	*	*	*	*	*	*	*	*	*	*	*
0796B	*	*	*	*	*	*	*	*	*	*	*	*	*
0856D	01(a)	Strip	Cont.	1626	1938	310	44	15.9	310	44	15.9	SS,NL,FLP,	Direct
	02(a)	Strip	Cont.	1506	1938	143.4	57.9	11.5	143.4	57.9	11.5	T,CNT,	Direct
	03(a)	Strip	Cont.	2226	1947	129		13.0	129		13	OT	Direct
	04(a)	Strip	Cont.	3516	1971	225	20.5	10.2	225	20.5	10.2	None	Direct
0856E	+01	Strip,Specialty	Cont.	285	1957	758	253	21.4	758	253	21.4	SSP,OT	Direct
0856F	01(a)	Sheet	Cont.	2559	1952	54	123.8	18.0	54	22.5	18(1)	CR,NL,NW,	Direct
	02(a)	Pipe	Batch	222	1953	1126	8432	4.1	1126	162	4.1(1)	FLL,SS,CL	(POTW)
	03(a)	Rod	Batch	156	1972	346	2677	7.7	346	185	7.7(1)	CNT,OT	(POTW)
0856N	01	Bar,Specialty	Batch	300	1970	432	1920	20	432	Unk	20(1)	OT, None	Direct
	02(a)	Pipe	Batch	276	1908	209	-	21.7	209	-	21.7(1)	OT, None	Direct
	03	Bar,Specialty	Batch	270	1970	160	1067	11.1	160	133	11.1(1)	OT, None	Direct
0856P	01(a)	Strip	Cont.	771	1940	1.95	232	27.5	1.95	232	27.5(1)	CNT,OT	Direct
	02(a)	Rod Wire	Batch	828	1964	696	-	13.5	696	-	13.5(1)	CNT,OT	Direct
0856Q	01(a)	Bar Pipe	Batch	15	1947	480	-	Unk	480	-	Unk(1)	CNT,OT	Direct
0856R	01(a)	Bar	Batch	351	1942	Unk	-	Unk	Unk	-	Unk(1)	OT, None	Direct
0856S	+01(a)	Rod Wire	Batch	222	1917	134	-	2.76	134	-	2.76(1)	NC,OT	POTW
0856T	+01(a)	Slab	Batch	258	1935	55.8	-	5.6	55.8(1)	-	5.6(1)	OT, None	Hauled
0856U	+01(a)	Rod Skelp Strip Sheet Plate Bar	Batch	186	1935	62	-	23.7	62	-	23.7	NW,OT	Direct
	+02(a)	Strip	Cont.	339	1950	467	-	12.7	467	-	12.7	NW,CNT,OT	Direct
0860F	+01(a)	Rod	Batch	1083	1942	465	-	16.6	465	-	16.6	DW,CNT,NL,NA, VF,CT,T,SSP,OT	Direct
0860G	+01(a)	Rod Wire	Batch	735	1943	783	-	22.4	110	-	22.4	DW,NL,CL,FLP,RTP	POTW
0864B	01(a)	Rod Wire	Batch	651	1940	398	-	9.2	398	-	9.2	FLL,FLP,NL,	Direct
	02(a)	Strip	Cont.	846	1951	170	-	Unk	170	-	Unk	NA,CL,SS,	Direct
	03(a)	Strip	Cont.	561	1958	257	-	Unk	257	-	Unk	OT	Direct
	04(a)	Strip	Cont.	759	1964	190	-	Unk	190	-	Unk		Direct
0868A	01(a)	Rod	Batch	573	1914	349	-	5.0	349	-	5.0	NL,CL,OT	Direct
	02(a)	Strip Sheet	Cont.	444	1943	162	908	40.5	162	0	40.5	FLP,CNT,NL,DW,	Direct
	03(a)	Sheet	Cont.	450	1944	96	448	36.8	96	0	36.8	CL,SL,SS,OT	Direct
	04(a)	Strip Sheet	Cont.	543	1955	133	597	45.6	133	0	45.6		Direct
	05(a)	Strip	Cont.	2088	1961	345	4.1	23.9	345	Unk	23.9		Direct
0884C	01(a)	Tube	Batch	18	1961	400	-	Unk	400	-	Unk	NC,OT	Direct

TABLE III-1
SULFURIC ACID PICKLING-SUMMARY TABLE
PAGE 6

Plant Code No.	Line No.	Process Product	Process Mode	Capacity (Tons/Day)	1st Year Production	Applied Flow (Gallons/ton) Rinses	Applied Flow Scrubber	Applied Flow Conc.	Discharge Flow (Gallons/ton) Rinses	Discharge Flow Scrubber	Discharge Flow Conc.	Treatment Components	Discharge Mode
0884D	01(a)	Tube	Batch	18	1969	1200	None	16.7	1200	-	16.7	NC,SL,OT	Direct
0884G	01(a)	Tube	Batch	7.8	1973	77	None	Unk	77	-	Unk	VF,CL,NL,OT	Direct
0916A	01(a)	Pipe	Batch	600	1931	180	None	15.0	180	-	15(1)	REU,CC	Direct
	02(a)	Tube	Batch	12	1931	60	None	18.0	60	-	18(1)	REU	Direct
0920D	01(a)	Pipe	Batch	267	1940	1079	None	33.7	1079	-	33.7(1)	OT,None	Direct
0946A	+01(a)	Billet	Batch	162	Unk	6.4	None	10.4	6.4	-	10.4(1)	OT,Unk	Direct
	+02(a)	Bar Wire	Batch	219	Unk	8.6	None	18.8	8.6	-	18.8(1)	OT,Unk	Direct
	+03(a)	Bar	Batch	172	1964	3.5	None	5.4	3.5	-	5.4(1)	OT,None	Direct
0948A	+01(a)	Pipe	Batch	189	1922	3810	None	48.9	3810	-	48.8(1)	CNT,CO,FLL,FLP, VF,CL,OT	Direct
0948B	01(a)	Bar	Batch	306	1947	1081	None	Unk	1081	-	Unk(1)	OT, None	(POTW)
0948C	01(a)	Strip	Cont.	699	1930	422	None	21.4	422	-	21.4	CNT,FLL,	Direct
	02(a)	Strip	Cont.	699	1930	422	None	21.4	422	-	21.4	FLP,T,E,	Direct
	03(a)	Sheet	Cont.	1761	1954	303	None	13.6	303	-	13.6	SS,OT,NL	Direct
	04(a)	Strip	Cont.	2685	1965	161	None	11.2	161	-	11.2		Direct

TABLE III-1
SULFURIC ACID PICKLING SUMMARY TABLE
PAGE 7

KEY TO ABBREVIATIONS

AD	:	Acid Disposal
ARF	:	Recovery of Acid via Fume Filters
AH	:	Acid Rinse Hauled
CC	:	Cascade Rinse
CH	:	Concentrate Hauled
CSD	:	Centrifuge Sludge Dewatering
CSR	:	Contractor Sludge Removal
DC	:	Dechlorination (Sulfur Dioxide)
DU	:	Disposal Unknown
EL	:	Equalization Lagoon
ES	:	Estimated
FIR	:	Ferrous Iron Removal by Air Sparging
FLFC	:	Flocculation with Ferric Chloride
FLW	:	Flocculation with Wastes
FLWPL	:	Flocculation with Waste Pickle Liquor
LS	:	Lamella Separator
N/A	:	Not Applicable
NAL	:	Neutralization with Alum
NAM	:	Neutralization with Ammonia
NU	:	Neutralization with Unknown
NR	:	Not Reported
pHS	:	pH Stabilization
RA	:	Reactor
RU	:	Rinses Untreated
SAPT	:	Sent to Another Plant for Treatment
SP	:	Scale Pit
SPI	:	Sewage Plant
ST	:	Settling Tank
TR	:	Treatment
UA	:	Acid Untreated
UFSF	:	Up Flow Sand Filters with Steam Backwash
Unk	:	Unknown
+	:	Represents a plant that has been shutdown.
*	:	Confidential Data
(a)	:	Carbon Steel Mill
(1)	:	Indicates wastewater eliminated by contract hauling.
(2)	:	Barometric condenser blowdown.

NOTE : See Table VII-1 for other general abbreviations.
: All data was derived from the basic questionnaire responses with the exception of data in brackets or parentheses. Data in brackets were derived from the plant sampling visit data or the detailed questionnaire responses. Data in parentheses represent treatment systems which were installed after 1/1/78.

TABLE III-2

HYDROCHLORIC ACID PICKLING SUMMARY TABLE

Plant Code No.	Line No.	Process Product	Process Mode	Capacity (Tons/Day)	1st Year Production	Applied Flow (Gallons/Ton) Rinses	Scrubber	Conc.	Avs.	Discharge Flow (Gallons/Ton) Rinses	Scrubber	Conc.	Avs.	Treatment Components	Discharge Mode
0020C	01	Strip, Speciality	Cont.	582	1946	958	7.4	Unk	-	958	7.4	Unk	-	CR,NL,FLP, CL,VF	Direct
0060	01(a)	Strip	Cont.	3900	1969	148	86.8	7.4	-	148	12.9	0	-	DW,NL,FP, AE,FHR,VF,	Direct
	02(a)	Strip	Cont.	4206	1969	137	80.4	6.8	-	137	12.0	0	-	FLP,SL,CL,	Direct
0060B	01(a)	Strip	Cont.	1816 [1949]	1955	Unk	159	8.6	Unk	Unk	Unk	0	Unk		Direct
	02(a)	Strip	Cont.	1691 [1620]	1963	Unk	408	7.4	Unk	Unk	Unk	0	Unk	CR,NL,AE,FLP,	Direct
	03(a)	Sheet	Batch	225 [251]	1974	Unk	896	23.3	Unk	Unk	Unk	0	Unk	CL,CT,VF,AR,	Direct
	04(a)	Strip	Cont.	489 [450]	1957	Unk	Unk	19.4	Unk	Unk	Unk	0	Unk	RET	Direct
0060D	01	Strip, Specialty	Cont.	207	1972	348	696	Unk	-	348	696	Unk	-	NW,NL,SL	Direct
0060L	01(a)	Tube	Batch	0.4	1974	13400	-	4.0	-	13400	-	4.0	-	NL	POTW
0068	01(a)	Fence	Cont.	104	1934	692	-	5.4	-	692	-	5.4	-	None	POTW
	02(a)	Wire	Cont.	89	1947	367	-	8.0	-	70.8	-	8.0	-	None	POTW
0088A	*	*	*	*	*	*	*	*	*	*	*	*	*	*	*
0112B	01(a)	Strip	Cont.	1425	1936	Unk	202	Unk		Unk	Unk	Unk(1)	-		Direct
	02(a)	Strip	Cont.	2589	1936	Unk	111	Unk		Unk	Unk	Unk(1)	-	SSP,AE,FPSP,	Direct
	03(a)	Strip	Cont.	1578	1936	Unk	183	Unk		Unk	Unk	Unk(1)	-	SS,CL	Direct
0112D	01(a)	Strip/Sheet	Cont.	3732	1965	Unk	116	Unk	-	Unk	Unk	Unk	-	SS,CL,FLP,NL	Direct
	02(a)	Strip/Sheet	Cont.	4788 Hf	1969	Unk	90	Unk	-	Unk	Unk	Unk	-	NW,CO,SL,DW	Direct
0112H	01(a)	Wire	Cont.	40	1971	Unk	358**	20.9	-	Unk	Unk	20.9	-	NL,FLL,CL,SL	Direct
0176	01	Wire, Specialty	Batch	16	1961	1811	-	Unk	-	1811	-	Unk	-	CO,CR,CLA,EB, FLP,NC,NW,NA, CL,SC,PSP,SSP, T,SS,CY,CNT	Direct
0320	01(a)	Sheet	Cont.	2023	1936	Unk		6.6	-	Unk		6.6(1)	-		Direct
	02(a)	Sheet	Cont.	1558	1937	Unk		5.1	-	Unk		5.1(1)	-		Direct
	03(a)	Sheet	Cont.	1821	1939	Unk	206	6.5	-	Unk	206	6.5(1)	-	PSP,CL,SL,SS,	Direct
	04(a)	Sheet	Cont.	2990	1967	Unk		6.1	-	Unk		6.1(1)	-	NC	Direct
0384A	01(a)	Strip	Cont.	849	1932	763	611	13.6	-	763	611	13.6	-		Direct
	02(a)	Strip	Cont.	1740	1932	372	298	8.3	-	372	298	8.3	-	SS,SL,DW	Direct
	03(a)	Strip	Cont.	1119	1951	450	463	7.7	-	450	463	7.7	-		Direct
	04(a)	Strip	Cont	2808 [3066]	1958	[60.5](3)	[9.8]	[13.9]	-	[50.7](3)	[9.8]	[13.9]	-	PSP,SS,CC	Direct
	06(a)	Sheet	Batch	768	1948	469	169	4.4	-	469	169	4.4	-	SL,PSP,SS	Direct

TABLE III-2
HYDROCHLORIC ACID PICKLING SUMMARY TABLE
PAGE 2

Plant Code No.	Line No.	Process Product	Process Mode	Capacity (Tons/Day)	1st Year Production	Applied Flow (Gallons/Ton) Rinses	Scrubber	Conc.	Avs.	Discharge Flow (Gallons/Ton) Rinses	Scrubber	Conc.	Avs.	Treatment Components	Discharge Mode
0396D	01(a)	Strip	Cont.	227	1967	[Unk]	[6.2]	[Unk]	-	[Unk]	[6.2]	[Unk]	-		POTW
	02(a)	Strip	Cont.	227	1967	[Unk]	[6.2]	[Unk]	-	[Unk]	[6.2]	[Unk]	-		POTW
	03(a)	Strip	Cont.	227	1967	[Unk]	[6.2]	[Unk]	-	[Unk]	[6.2]	[Unk]	-	CNT,NL,E,CL,	POTW
	04(a)	Strip	Cont.	227	1967	[Unk]	[6.2]	[Unk]	-	[Unk]	[6.2]	[Unk]	-	VF,CC	POTW
	05(a)	Strip	Cont.	227	1967	[Unk]	[6.2]	[Unk]	-	[Unk]	[6.2]	[Unk]	-		POTW
0432C	01(a)	Strip	Cont.	2193	1952	246	48.5	15.8	-	246	48.5	15.8(1)	-	VF,FLL,FLP,NW,	Direct
	02(a)	Strip	Cont.	2259	1957	239		15.3	-	239		15.3(1)	-	CL,PSP,SS,CT	Direct
0432D	01(a)	Strip/Sheet	Cont.	3678	1968	596	78.3	8.5	-	596	78.3	8.5	-	FP,DW,FLL,T, FLWPL	Direct
0448A	01(a)	Sheet	Cont.	2004 [2040]	1954	Unk	Unk	9.8 [6.1]	-	Unk	Unk	9.8(1)	[6.1] -	NAM	POTW
	02(a)	Sheet	Cont.	793 [768]	1970	Unk	Unk	7.0 [8.7]	-	Unk	Unk	7.0(1)	[8.7] -		POTW
0528B	01(a)	Strip	Cont.	[1813]	1963	[27.8]	[4.3]	[15.9]	[119]	[27.8]	[4.3]	[0]	[119]	NC,SL,SS,AR	Direct
0580	01(a)	Wire	Cont.	3	1960	1500	-	10.0	-	1500	-	10.0(1)	-		POTW
	02(a)	Rod/Wire	Cont.	60	1965	350	110	1.8	-	350	110	1.8	-	Line 2,3,4,6	POTW
	03(a)	Wire	Cont.	15	1965	300	300	3.0	-	300	300	3.0(1)	-	CC	POTW
	04(a)	Wire	Cont.	30	1965	240	-	1.5	-	240	-	1.5	-		POTW
	05(a)	Wire	Cont.	4.5	1965	1333	-	33.3	-	1333	-	33.3	-		POTW
	06(a)	Wire	Cont.	12	1970	375	375	3.8	-	375	375	3.8(1)	-		POTW
0580A	01(a)	Wire Cloth	Cont.	1.5	1962	6240	-	5.9	-	6240	-	5.9(1)	-		Direct
	02(a)	Wire Cloth	Cont.	2.2	1962	9333	-	117.5	-	9333	-	117.5(1)	-	NL,NW,FP	Direct
	03(a)	Wire	Batch	3.7	1962	1950	-	15.2	-	1950	-	15.2(1)	-		Direct
0580B	01(a)	Wire	Cont.	15	1965	300	300	3.0	-	300	300	3.0	-		POTW
	02(a)	Wire	Cont.	30	1965	240	-	1.5	-	240	-	1.5	-	CC	POTW
	03(a)	Rod/Wire	Cont.	60	1965	350	110	1.8	-	350	110	1.8	-		POTW
0580C	01(a)	Strip/Band	Cont.	3	NR	1440	-	Unk		1440	-	Unk(1)	-		POTW
	02(a)	Rod/Wire	Cont.	21	1966	3017	-	Unk	-	3017	-	Unk(1)	-	NL	POTW
	03(a)	Wire	Cont.	15	1957	1152	-	4.4	-	1152	-	4.4(1)	-		POTW
0580D	01(a)	Rod/Wire	Cont.	60	1965	350	110	1.8	-	350	110	1.8	-	CO,CLA,FLP, NC,CL,SL,CC	Direct
	02(a)	Wire	Cont.	15	1965	300	300	3.0		300	300	3.0	-	CO,CLA,FLP,	Direct
	03(a)	Wire	Cont.	30	1965	240	150	1.5		240	150	1.5	-	NL,CL,SL,CC	Direct
0580E	01(a)	Rod/Wire	Cont.	60	1960	350	-	1.8	-	350	-	1.8	-	NC,CC	POTW
	02(a)	Wire	Cont.	30	1930	240	-	1.5	-	240	-	1.5	-		POTW
0580F	01(a)	Rod/Wire	Cont.	[*]	1965	350	110	1.8	-	350	110	1.8(1)	-	NC,CC	POTW
	02(a)	Wire	Cont.	[*]	1965	240	150	1.5	-	240	150	1.5(1)	-	NL,NC,CC	POTW

TABLE III-2
HYDROCHLORIC ACID PICKLING SUMMARY TABLE
PAGE 3

Plant Code No.	Line No.	Process Product	Process Mode	Capacity (Tons/Day)	1st Year Production	Applied Flow (Gallons/Ton) Rinses	Scrubber	Conc.	Avs.	Discharge Flow (Gallons/Ton) Rinses	Scrubber	Conc.	Avs.	Treatment Components	Discharge Mode
0584A	01(a)	Strip	Cont.	2490	1936	217	145**	4.6	-	217	145	4.6	-	VF,FLL,EB,	Direct
	02(a)	Strip	Cont.	2409	1936	224	149**	4.8	-	224	149	4.8	-	FLP,NL,NW,AE,	Direct
	03(a)	Strip	Cont.	2826	1936	191	127**	4.1	-	191	127	4.1	-	NA,CL,T,	Direct
	04(a)	Strip	Cont.	2223	1957	243	162**	5.2	-	243	162	5.2	-	SS	Direct
0584C	01(a)	Strip	Cont.	3066	1947	225	141	4.7	-	225	0.8	4.7	-	FDSP,SS,SL,RFHS, CLB,DC	Direct
0584F	01(a)	Strip	Cont.	2250 [2306]	1939	128	9.6	[16.6]	[23]	128	9.6	[0]	[23]		Direct
	02(a)	Strip	Cont.	2730 [2650]	1956	316	264	[16.6]	[23]	316	264	[0]	[23]	AR,SL,SS,DT,CC,	Direct
	03(a)	Strip	Cont.	[3464]	1974	42(2)	[9.6]	[16.6]	[23]	42(2)	[0.4]	[0]	[23]	RFHS	Direct
0612	01(a)	Wire	Cont.	70	Pre-1950	[66]	-	[3.6]	-	[66]	-	[3.6]	-		Direct
	02(a)	Wire	Cont.	70	Pre-1950	[66]	-	[3.6]	-	[66]	-	[3.6]	-	NL,CO,FLP,	Direct
	03(a)	Wire	Cont.	70	Pre-1950	[66]	-	[3.6]	-	[66]	-	[3.6]	-	CL,VF,FDSP	Direct
	04(a)	Wire	Cont.	70	Pre-1950	[66]	-	[3.6]	-	[66]	-	[3.6]	-		Direct
	05(a)	Fence	Cont.	16	Pre-1950	[66]	-	[3.6]	-	[66]	-	[3.6]	-	None	Direct
0684B	01(a)	Strip	Cont.	1326	1957	109	217	8.7	-	109	217	8.7(1)	-	SL,SS	Direct
	02(a)	Strip	Cont.	1407	1961	102	102	12.3	-	102	102	12.3(1)	-		Direct
0684F	01(a)	Sheet/Plate	Cont.	1740	1937	124(2)	166	7.3	-	124(2)	21	7.3	-	NL,CO,SS,NW,RFHS, FLL,FLFC,FLP,FT,	Direct
	02(a)	Sheet/Plate	Cont.	3084	1969	70(2)	93	8.2	-	70(2)	12	8.2	-	CL,VF,GF	Direct
	03(a)	Sheet	Cont.	1146	1952	167.5	83.8	2.7	-	167.5	83.8	2.7	-	(line 1 & 2,CC)	Direct
0684I	01(a)	Strip	Cont.	1377	1964	272	146	13.6	[105]	272	136	0	[105]	AR,PSP,SSP,SS, BO,NW,SL,RFHS	Direct
0724A	01(a)	Sheet/Strip	Cont.	360	1949	4160	300	Unk	-	4160	240	Unk	-		Direct
	02(a)	Sheet/Strip/Plate	Cont.	336	1950	1200	86	Unk	-	1200	86	Unk	-	RFHS	Direct
	03(a)	Sheet	Cont.	738	1958	1366	88	Unk	-	1366	78	Unk	-		Direct
	04(a)	Sheet	Cont.	1719	1966	84	17	7.3	-	84	17	7.3	-		Direct
0856F	01(a)	Sheet	Cont.	2388	1950	46	66	9.6	-	46	12	9.6	-	CR,NW,NL,FLL, SS,CL	Direct
0856P	01(a)	Wire	Cont.	17	1917	15540	15125	5.9	-	15540	15125	5.9	-	None	Direct
0856S	+01(a)	Wire	Cont.	19	1927	589	-	0.8	-	589	-	0.8	-	NC	POTW
	+02(a)	Wire	Cont.	5.4	1937	1309	-	2.4	-	1309	-	2.4	-		POTW

TABLE III-2
HYDROCHLORIC ACID PICKLING SUMMARY TABLE
PAGE 4

Plant Code No.	Line No.	Process Product	Process Mode	Capacity (Tons/ Day)	1st Year Pro- duction	Applied Flow (Gallons/Ton)				Discharge Flow (Gallons/Ton)				Treatment Components	Dis- charge Mode
						Rinses	Scrubber	Conc.	Avs.	Rinses	Scrubber	Conc.	Avs.		
0860B	01(a)	Strip	Cont.	1815	1948	421	56	1.6	-	421	56	1.6	-	FP,DW,	Direct
	02(a)	Strip	Cont.	1815	1948	476	-	1.6	-	476	-	1.6	-	NL,SL	Direct
	03(a)	Strip	Cont.	2955	1959	792	37	4.9	-	792	37	4.9	-		Direct
	04(a)	Strip	Cont.	3411	1968	306	32	5.1	-	306	32	5.1	-		Direct
0860F	+01(a)	Wire	Cont.	69	1942	3130	-	7.0	-	188	-	7.0	-	NL,SSP,FPSP,VF,	Direct
	+02(a)	Wire	Cont.	38	1942	5760	-	12.8	-	346	-	12.8	-	CT,FP	Direct
	+03(a)	Wire	Cont.	38	1942	5760	-	12.8	-	346	-	12.8	-		Direct
0864B	01(a)	Wire	Cont.	59	1937	487	-	2.5	-	487	-	2.5	-		Direct
	02(a)	Wire	Cont.	28	1943	766	-	5.3	-	766	-	5.3	-	SS,NL,FLL,	Direct
	03(a)	Strip	Cont.	1440	1947	15	25	12	-	15	Unk	12	-	FLP,CL,NA,	Direct
	04(a)	Strip	Cont.	1965	1951	183	18	8.8	-	183	Unk	8.8	-	pHS	Direct
	05(a)	Pipe	Batch	273	1966	1055	132	Unk	-	1055	Unk	Unk	-		Direct
0868A	01(a)	Strip	Cont.	1590	1948	299	45	25.4	-	299	45	25.4	-	FLP,FLWPL,NL,FP, CL,SL,SS	Direct
0920A	01(a)	Sheet	Cont.	1761	1930	245	16	18.7	-	245	16	18.7	-	EB,FLL,CO,IX,	Direct
	02(a)	Sheet	Cont.	1638	1966	264	18	19.3	-	264	18	19.3	-	CL,VF	Direct
0920C	01(a)	Strip	Cont.	2446	1953	212	25	7.4	-	212	25	7.4	-	NL,FLP,SS,VF	Direct
0920G	01(a)	Strip	Cont.	2133	1958	225	-	7.0	-	225	-	7.0	-	CR,NL,FLL,FLP, CL	Direct
0948A	+01(a)	Strip	Cont.	1428	1935	50	227	3.7	-	50	5	3.7	-	CO,FLL,FLP,CL,	Direct
	+02(a)	Strip	Cont.	1209	1935	60	268	4.4	-	60	6	4.4	-	VF,CC,RFHS	Direct

TABLE III-2
HYDROCHLORIC ACID PICKLING SUMMARY TABLE
PAGE 5

KEY TO ABBREVIATIONS

AD	:	Acid Disposal
ARF	:	Recovery of Acid via Fume Filters
AH	:	Acid Rinse Hauled
CH	:	Concentrate Hauled
CSD	:	Centrifuge Sludge Dewatering
CSR	:	Contractor Sludge Removal
DC	:	Dechlorination (Sulfur Dioxide)
DU	:	Disposal Unknown
EL	:	Equalization Lagoon
ES	:	Estimated
FIR	:	Ferrous Iron Removal by Air Sparging
FLFC	:	Flocculation with Ferric Chloride
FLW	:	Flocculation with Wastes
FLWPL	:	Flocculation with Waste Pickle Liquor
LS	:	Lamella Separator
N/A	:	Not Applicable
NAL	:	Neutralization with Alum
NAM	:	Neutralization with Ammonia
NU	:	Neutralization with Unknown
NR	:	Not Reported
pHS	:	pH Stabilization
RA	:	Reactor
RU	:	Rinses Untreated
SAPT	:	Sent to Another Plant for Treatment
SP	:	Scale Pit
SPI	:	Sewage Plant
ST	:	Settling Tank
TR	:	Treatment
UA	:	Acid Untreated
UFSF	:	Up Flow Sand Filters with Steam Backwash
UNK	:	Unknown
+	:	Represents a facility that has been shutdown
*	:	Confidential Data
**	:	Design Flow
(a)	:	Carbon Steel Mill
(1)	:	Indicates wastewater eliminated by contract hauling.
(2)	:	Data obtained from AISI comment.
(3)	:	Looping pit flow included.

TABLE III-2
HYDROCHLORIC ACID PICKLING SUMMARY TABLE
PAGE 6

NOTE : See Table VII-1 for other general abbreviations.

: All data was derived from the basic questionnaire responses with the exception of data in brackets or parentheses. Data in brackets were derived from the plant sampling visit data or the detailed questionnaire responses. Data in parentheses represent treatment systems which were installed after 1/1/78.

: Where plant visit data and D-DCP data were available for the same line, D-DCP data was considered more representative of actual operations.

TABLE III-3

COMBINATION ACID PICKLING SUMMARY TABLE

Plant Code No.	Line No.	Process Product	Process Mode	Capacity (Tons/Day)	1st Year Production	Applied Flow (Gallons/ton) Rinses	Applied Flow Scrubber	Applied Flow Conc.	Discharge Flow (Gallons/ton) Rinses	Discharge Flow Scrubber	Discharge Flow Conc.	Treatment Components	Discharge Mode
0020B	01	Sheet Strip Skelp H_2SO_4,HNO_3,HF	Cont.	324	1952	1333	222	15.5	1333	222	15.5(1)	CNT,CR,VF, FLP,NR,CL	Direct
	02	Sheet Strip, H_2SO_4,HNO_3,HF	Cont.	210	1957	1029	343	24.7	1029	343	24.7(1)	CNT,CR,VF, FLP,NL,CL, FHS	Direct
	03	Sheet Strip, H_2SO_4,HNO_3,HF	Batch	99	1947	2182	-	52.1	2182	-	52.1(1)	CNT,CR,VF, FLP,NL,CL	Direct
0020C	01	Sheet Strip, H_2SO_4,HNO_3,HF	Cont.	208	1951	4127	20.8	Unk	4127	20.8	Unk	CNT,CR,VF, FLP,NL,CL	Direct
	02	Sheet Strip, HNO_3,HF	Cont.	94	1946	6288	1380	Unk	6288	1380	Unk	CNT,CR,VF, FLP,NL,CL	Direct
	03	Sheet Strip, H_2SO_4,HF,HNO_3	Cont.	94	1946	6288	1380	Unk	6288	1380	Unk		Direct
	04	Sheet Strip, H_2SO_4,HF,HNO_3	Cont.	59	1930	9388	561	Unk	9388	561	Unk	CNT,CR,VF, FLP,NL,CL	Direct
	05	Sheet Strip, H_2SO_4,HF,HNO_3	Cont.	100	1945	5509	329	Unk	5509	329	Unk		Direct
	06	Strip,HCl/HF	Cont.	89	1966	2271	102	Unk	2271	102	Unk	CNT,CR,VF, FLP,NL,CL	Direct
	07	Sheet Strip, H_2SO_4,HNO_3/HF	Cont.	263	1957	2900	1096	Unk	2900	1096	Unk	CNT,CR,VF, FLP,NL,CL	Direct
0020L	01	Sheet,H_2SO_4, HNO_3,HF	Cont.	186	1966	1087	272	7.8	1087	272	7.8	CNT,CR,FLA, NL,CL	Direct
	02	Sheet,H_2SO_4 HNO_3,HCl	Cont.	200	1966	1011	253	7.2	1011	253	7.2	CNT,CR,FLP, NL,CL	Direct
0060	01	Strip,H_2SO_4 H_3PO_4	Cont.	308	1974	Unk	Unk	23.4	Unk	Unk	23.4	CNT,Spent Acid to VF,FLP, NL,CL,SL	Direct
0060D	01(a)	Strip,H_2SO_4, HNO_3,HF	Cont.	228	1927	Unk	1579	Unk	Unk	63	Unk	CNT,NL, SL,AE	Direct
	02	Strip,H_2SO_4, HF	Cont.	300	1935	Unk	1200	Unk	Unk	48	Unk		Direct
	03	Strip,H_2SO_4 HNO_3,HF	Cont.	288	1939	Unk	100	Unk	Unk	Unk	Unk		Direct
	04	Strip,H_2SO_4, HF	Cont.	435	1945	Unk	Unk	Unk	Unk	Unk	Unk		Direct
	05	Strip,HNO_3,HF	Cont.	300	1961	Unk	50.4	Unk	Unk	Unk	Unk(1)	CNT,NL,CL, VF	Direct
	06	Strip,H_2SO_4, HNO_3,HF	Cont.	282	1961	Unk	511	Unk	Unk	Unk	Unk	CNT,NL,SL,AE	Direct

TABLE III-3
COMBINATION ACID PICKLING SUMMARY TABLE
PAGE 2

Plant Code No.	Line No.	Process Product	Process Mode	Capacity (Tons/Day)	1st Year Production	Applied Flow (Gallons/ton) Rinses	Applied Flow Scrubber	Applied Flow Conc.	Discharge Flow (Gallons/ton) Rinses	Discharge Flow Scrubber	Discharge Flow Conc.	Treatment Components	Discharge Mode
0060E	01	Strip,HCl,HF	Cont.	426	1973	1690	777	8.2	1690	777	8.2(1)	CNT,F(Unk), FLP,NC,T	Direct
	02	Strip,Unk	Cont.	100	1970	Unk	1381	2.5	Unk	1381	2.5(1)	CNT,F(Unk), FLP,NC,T	Direct
0060I	01	Rod Wire, H_2SO_4,HNO_3	Batch	177	1946	611	-	Unk	611	-	Unk	CNT,CR, NC,NA	POTW
0060N	01	Pipe,HNO_3,HF	Batch	10	1970	109	-	46.9	109	-	46.9	NL,NW,SS,ST	Direct
0060P	01	Pipe,HNO_3HF	Batch	26	1969	Unk	-	8.2	Unk	-	8.2	CNT,NL, SL	Direct
0088A	01	Tube,HNO_3,HF	Batch	72	1952	[310]	-	4.1	[310]	-	4.1(1)	CNT,E,CR, NL,FLP,CL,T,VF, SS	Direct
0088C	01(a)	Tube,H_2SO_4, or HCl,H_3PO_4	Batch	273	1957	791	-	6.59	791	-	6.59	Unknown	Direct
	02(a)	Tube,H_2SO_4, or HCl,H_3PO_4	Batch	273	1957	791	-	6.59	791	-	6.59		Direct
0088D	01	Tube,HNO_3,HF	Batch	52	1969	[1176]	-	Unk	[1176]	-	Unk(1)	E,NC,F(Unk),PSP	Direct
0112A	01(a)	Rod Wire,H_2SO_4 HCl	Batch	1044	1926	Unk	-	3.9	Unk	-	3.9	CNT, SS,NL,A,FLA, Scr,FLP,SL,CY,T,	Direct
	02(a)	Wire,H_2SO_4, HCl	Cont.	96	1939	Unk	750	18.8	Unk	750	18.8	CNT,SS, Scr,NL,A,FLA,FLP, SL,CY,T	Direct
0112C	01(a)	Bar Rod Wire, H_2SO_4,HCl	Batch	882	1914	Unk	Unk	16.3	Unk	Unk	16.3	CNT,NL,CL,T, AE,Conc(ES)	Direct
	02(a)	Wire,H_2SO_4, HCl	Cont.	77	1936	7706	Unk	Unk	7706	Unk	Unk		Direct
	03(a)	Wire,H_2SO_4, HCl	Cont.	28	1944	Unk	Unk	Unk	Unk	Unk	Unk	CNT,NL,CL,T, AE, Conc(ES)	Direct
	04(a)	Wire,H_2SO_4, HCl	Cont.	26	1960	Unk	Unk	Unk	Unk	Unk	Unk	CNT,NL,CL, T,AE, Conc(ES)	Direct
0112H	01(a)	Rod Wire,H_2SO_4 HCl	Batch	552	1940	[116]	Unk	6.52	[116]	Unk	6.52	CNT,FLA, NL,CL,SL, E	Direct
0176	01	Rod Wire,H_2SO_4 HCl,HNO_3,HF	Batch	262	1940	633	3550	Unk	633	330	Unk(1)	CNT,CLA, CR,EB,FLP,NC,NW, CL,CY	Direct
	02	Rod Wire Shape, H_2SO_4,HCl, HNO_3,HF	Batch	172	1941	1043	2087	Unk	1043	417	Unk(1)	CNT,CLA,CR, EB,FLP,NC,NW,NA,CL, CY	Direct

TABLE III-3
COMBINATION ACID PICKLING SUMMARY TABLE
PAGE 3

Plant Code No.	Line No.	Process Product	Process Mode	Capacity (Tons/Day)	1st Year Production	Applied Flow (Gallons/ton) Rinses	Applied Flow (Gallons/ton) Scrubber	Applied Flow (Gallons/ton) Conc.	Discharge Flow (Gallons/ton) Rinses	Discharge Flow (Gallons/ton) Scrubber	Discharge Flow (Gallons/ton) Conc.	Treatment Components	Discharge Mode
	03	Strip, H_2SO_4 HNO_3/HF	Cont.	90	1962	558	3189	Unk	558	80	Unk(1)	CNT, CLA, CR, EB, FLP, NC, NW, NA, CL, CY	Direct
	04	Strip, HNO_3/HF, HNO_3	Cont.	20	1963	2182	1273	Unk	2182	364	Unk(1)	CNT, CLA, CR, EB, FLP, NC, NAL, CL, T, SS, CY	Direct
	05	Strip, HNO_3, HNO_3/HF	Cont.	18	1963	2000	7000	Unk	2000	200	Unk(1)	CNT, CLA, CR, EB, FLP, NC, NW, NA, CL, T, SS, CY	Direct
	06	Wire, HNO_3, HF	Batch	89	1964	805	2142	Unk	805	161	Unk(1)	CNT, CLA, CR, EP, FLP, NC, NW, NA, CL, EB, T, SS, CY	Direct
	07	Strip Rod, HCl, HNO_3, HF	Batch	203	1968	711	3689	Unk	711	284	Unk(1)	CNT, CLA, CR, EB, FLP, NC, NW, NA, CL, T, SS, CY,	Direct
0176C	01	Pipe Tube, HNO_3, HF	Batch	23	1969	1617	-	41.3	1617	-	41.3(1)	No treatment for Rinses	POTW
0176D	+01	Tube, HNO_3, HF	Batch	9	1972	3200	960	35	3200	960	35	None	POTW
0248B	01	Strip, H_2SO_4, HNO_3, HF	Cont.	265	1949	1224	376	13.4	1224	49	13.4	CNT, SCR, NL, FLP, CL, T, FP	Direct
	02	Strip, H_2SO_4, HNO_3, HF	Cont.	94	1949	3604	1702	40.2	3604	230	40.2	CNT, SCR, NL, FLP, CL, T, FP	Direct
	03	Strip, H_2SO_4, HNO_3, HF	Cont.	228	1949	1233	702	13.9	1233	95	13.9	CNT, SCR, NL, FLP, CL, T, FP	Direct
	04	Strip, H_2SO_4, HNO_3, HF	Cont.	169	1955	1277	766	13.4	1277	0	13.4	CNT, SCR, NL, FLP, CL, T, FP	Direct
	05	Strip, H_2SO_4, HNO_3, HF	Cont.	246	1959	965	403	10.6	965	53	10.6	CNT, SCR, NL, FLP, CL, T, FHS, FP	Direct
	06	Strip, H_2SO_4 HNO_3, HF	Cont.	154	1959	1828	2344	21.1	1828	188	21.1	CNT, SCR, NL, FLP, CL, T, FHS, FP	Direct
	07	Strip, H_2SO_4, HNO_3, HF	Cont.	78	1961	1563	-	16.5	1563	-	16.5	CNT, SCR, NL, FLP, CL, T, FP	Direct
	08	Strip, HSO_4, HNO_3, HF	Cont.	98	1964	1244	-	13.1	1244	-	13.1	CNT, SCR, NL, FLP, CL, T, FP	Direct
	09	Strip, H_2SO_4, HNO_3, HF	Cont.	322	1964	738	309	8.1	738	40	8.1	CNT, SCR, NL, FLP, CL, T, FP	Direct
	10	Strip, H_2SO_4, HNO_3, HF	Cont.	223	1973	1066	446	11.7	1066	58	11.7		Direct

TABLE III-3
COMBINATION ACID PICKLING SUMMARY TABLE
PAGE 4

Plant Code No.	Line No.	Process Product	Process Mode	Capacity (Tons/Day)	1st Year Production	Applied Flow (Gallons/ton) Rinses	Applied Flow Scrubber	Applied Flow Conc.	Discharge Flow (Gallons/ton) Rinses	Discharge Flow Scrubber	Discharge Flow Conc.	Treatment Components	Discharge Mode
0248C	01	Rod Wire, H_2SO_4, HCl, HNO_3, HF	Batch	141	1930	1015	-	2.4	1015	-	2.4(1)	AE, NC, FL, FLP, CL, SL, CNT	Direct
	02	Rod Wire, HCl, HNO_3, HF	Batch	0.7	1930	8889	-	20.8	8889	-	20.8(1)	AE, NC, FL, FLP, CL, SL, CNT	Direct
	03	Bar, H_2SO_4, HNO_3, HF	Batch	112	1945	2310	-	2.7	1240	-	2.7(1)	AE, NC, FL, FLP, CL, SL, CNT	Direct
0248D	01	Pipe Tube, H_2SO_4, HNO_3, HF	Batch	2.7	1948	2667	-	87.8	2667	-	87.8(1)	CNT, T, NL, NC, T,	Direct
	02	Pipe Tube, H_2SO_4, HNO_3, HF	Batch	2.7	1948	2667	-	87.8	2667	-	87.8(1)		Direct
	03	Pipe Tube, H_2SO_4, HNO_3, HF	Batch	7.8	1958	923	-	30.4	923	-	30.4(1)		Direct
	04	Pipe Tube H_2SO_4, HNO_3, HF	Batch	8.7	1974	414	-	149	414	-	149(1)	CNT, T, NL, NC, T,	Direct
	05	Tube, H_2SO_4, HNO_3, HF	Batch	14	1970	267	-	119	267	-	119(1)		Direct
0248E	01	Tube, HNO_3, HF	Batch	5.2	1958	690	-	2.93	690	-	2.93(1)	CNT	POTW
0248F	01	Tube, HNO_3, HF	Batch	0.8	1966	2357	Unk	1089	2357	Unk	1089	CNT, NL, SL, NL	Direct
0256F	01	Tube, H_2SO_4, HNO_3, HF	Batch	30	1953	960	7200	9.5	960	0	9.5(1)	CNT, FLL, FLA, FLP, NA, NL,	Direct
0256L	*	*	*	*	*	*	*	*	*	*	*	*	*
0256N	01	*	*	*	*	*	*	*	*	*	*	*	*
	02	*	*	*	*	*	*	*	*	*	*	*	*
0256O	01	Sheet Strip, H_2SO_4, HNO_3, HF	Cont.	166	1959	5729	694	11.5	4163	694	11.5	CNT, CL, FLP,	Direct
	02	Strip, H_2SO_4, HNO_3, HF	Cont.	122	1960	6588	944	15.3	5647	944	15.3	CNT, NL, FLP, CL	Direct
	03	Strip, H_2SO_4, HNO_3, HF	Cont.	172	1960	1064	268	7.5	796	268	7.5	CNT, NL, FLP, CL	Direct
	04	Strip, H_2SO_4, HNO_3, HF	Cont.	113	1972	6051	1532	17.0	4443	0	17.0	CNT, NL, FLP, CL	Direct

TABLE III-3
COMBINATION ACID PICKLING SUMMARY TABLE
PAGE 5

Plant Code No.	Line No.	Process Product	Process Mode	Capacity (Tons/Day)	1st Year Production	Applied Flow (Gallons/ton) Rinses	Applied Flow Scrubber	Applied Flow Conc.	Discharge Flow (Gallons/ton) Rinses	Discharge Flow Scrubber	Discharge Flow Conc.	Treatment Components	Discharge Mode
0284A	01	Sheet Plate, H_2SO_4, HNO_3, HF	Batch	177	1946	325	163	3.0	325	163	3.0(1)	CNT, CR, SL, NL, FLP, CL, CY, SS	Direct
	02(a)	Strip, H_2SO_4, HNO_3, HF	Cont.	161	1957	358	179	1.7	358	179	1.7(1)	CNT, CR, SL, NL, FLP, CL, CY, SS	Direct
	03(a)	Strip, H_2SO_4, HNO_3, HF	Cont.	138	1957	313	104	2.0	313	104	2.0(1)	CNT, CR, SL, NL, FLP, CL, CY, SS	Direct
0424	01	Plate, H_2SO_4, HNO_3, HF	Batch	186	1960	93	-	10.8	93	-	10.8(1)	CNT, FLP, NL, CL, NC, NW, SL, R	Direct
	02	Bar, H_2SO_4, HNO_3, HF	Batch	25	1968	463	-	45.7	463	-	45.7	CNT, FLP, NL, CL, NC, NW, SL	Direct
0430C	01	Plate, H_2SO_4, HNO_3, HF	Batch	60	1962(1977)	288	1200	72	288	1200	72	CNT, BOA(1), CLN, FLL, FLP, NL, SCR, SS, PSP, SSP, CL, SL	Direct
0432E	01	Tube, HNO_3, HF	Batch	15	1969	3168	864	2.2	3168	864	2.2(1)	None	POTW
0432K	01	Sheet, HNO_3	Cont.	95	1962	457	Dry	1.6	457	Dry	1.6	CNT, NL, SL	Direct
	02	Sheet, H_2SO_4, HNO_3, HF	Cont.	230	1958	Unk	94	Unk	457	94	Unk		Direct
	03	Sheet, H_2SO_4, HNO_3, HF	Cont.	341	1966	Unk	63	Unk	457	63	Unk		Direct
	04	Sheet, H_2SO_4, HNO_3, HF	Cont.	188	1958	Unk	115	Unk	Unk	115	Unk		Direct
0432L	01	Strip, HNO_3, HF	Cont.	34	1959	5571	-	18	5571	-	18(1)	None	POTW
0440A	01	Bar, HCl, HNO_3	Batch	162	1958	178	-	6.9	178	-	6.9	CNT, NL, NW, SL,	POTW
	02	Rod Wire, HCl, HNO_3, HF	Batch	75	1958	384	-	11	384	-	11		POTW
0476A	01(a)	Rod, HCl, H_2SO_4	Batch	386	1940	932	-	31.1	932	-	31.1	CNT, SCR, SS, NL, AE, FLP, CL, CY, AU	Direct
0496	01	Plate, HNO_3, HF	Batch	411	1964	736	701	9	736	2.4	9(1)	CNT, NL, SL	Direct
0548A	01(a)	Pipe Tube, H_2SO_4, HNO_3, H_3PO_4	Batch	63	1957	2286	Unk	0.633	2286	Unk	0.633	CNT, NC SL	Direct
0548B	01	Tube, HNO_3, HF	Batch	1.8	1947	3871	-	16.1	3871	-	16.1	NL, CNT	POTW
0580	01(a)	Rod, HCl, HNO_3	Batch	45	1965	667	Unk	1.0	667	Unk	1.0	None	POTW
0580G	01(a)	Rod Wire, H_2SO_4 HCl	Batch	161	1950	143	Unk	1.25	143	Unk	1.25(1)	None	POTW

TABLE III-3
COMBINATION ACID PICKLING SUMMARY TABLE
PAGE 6

Plant Code No.	Line No.	Process Product	Process Mode	Capacity (Tons/Day)	1st Year Production	Applied Flow (Gallons/ton) Rinses	Applied Flow (Gallons/ton) Scrubber	Applied Flow (Gallons/ton) Conc.	Discharge Flow (Gallons/ton) Rinses	Discharge Flow (Gallons/ton) Scrubber	Discharge Flow (Gallons/ton) Conc.	Treatment Components	Discharge Mode
0636	01	Tube, H_2SO_4, HNO_3, HF	Batch	NA	1943	Unk	-	Unk	Unk	-	Unk(1)	CNT	POTW
	02	Tube, HNO_3, HF	Batch	NA	1943	Unk	-	Unk	Unk	-	Unk(1)	CNT	POTW
	03	Tube, HNO_3, HF	Batch	NA	1968	Unk	-	Unk	Unk	-	Unk(1)	CNT	POTW
0640B	01(a)	Rod Wire, H_2SO_4, HCl	Batch	171	1950	1011	Unk	33.3	1011	Unk	33.3(1)	FLP,NC,CL,T,CNT	POTW
0648	01(a)	Rod Wire, H_3PO_4	Cont.	129	1968	Unk	Unk	Unk	Unk	Unk	Unk(1)	NL,RTP	POTW
0684D	01	Strip, HNO_3, HF	Cont.	66	1947	2291	-	22.2	2291	-	22.2(1)	CNT,SL,SS	Direct
	02	Strip, HF, HNO_3	Cont.	81	1940	1867	-	Unk	1867	-	Unk(1)	CNT,CL	Direct
	03	Strip, HNO_3, HF	Cont.	81	1940	2044	-	23.4	2044	-	23.4(1)	CNT,SL,SS	Direct
	04	Strip, HNO_3, HF	Cont.	39	1947	4246	-	Unk	4246	-	Unk(1)		Direct
	05	Strip, HNO_3, HF	Cont.	72	1947	2100	-	24.9	2100	-	24.9(1)		Direct
	06	Strip, HNO_3, HF	Cont.	135	1947	1387	-	16.8	1387	-	16.8(1)	NA	Unk
	07	Strip, H_2SO_4, HNO_3, HF	Cont.	195	1947	1255	-	11.2	1255	-	11.2(1)		Unk
	08	Strip, HNO_3, HF	Cont.	42	1947	4457	-	18.4	4457	-	18.4(1)	NA	Unk
	09	Strip, HNO_3, HF	Cont.	60	1947	3120	-	25.7	3120	-	25.7(1)		Unk
	10	Strip, HNO_3, HF	Cont.	69	1947	2713	-	7.6	2713	-	7.6(1)		Unk
	11	Strip, HNO_3, HF	Cont.	81	1947	2222	-	22.4	2222	-	22.4(1)		Unk
	12	Strip, HNO_3, HF	Cont.	105	1947	1714	-	18.8	1714	-	18.8(1)		Unk
	13	Strip, HNO_3, HF	Cont.	177	1955	1383	-	12.8	1383	-	12.8(1)		Unk
0684K	*	*	*	*	*	*	*	*	*	*	*	*	*
0684P	01(a)	Bar, HCl, HNO_3, HF	Batch	38	Pre-1900	Unk	Unk	12	Unk	Unk	12(1)	None	Direct
	02	Bar, H_2SO_4, HNO_3, HF	Batch	20	Pre-1900	133.6	-	14	0	-	120(1)	ARF	Direct
	03	Wire, H_2SO_4, HNO_3, HF	Batch	37	Pre-1900	Unk	Unk	113	Unk	Unk	113(1)		Direct
0684V	01	Sheet Strip, Plate, H_2SO_4 HNO_3, HF	Batch	194	1916	409	-	5	409	-	5(1)	NA	NA
0724A	+01(a)	Pipe, HNO_3, HF	Batch	75	1951	Unk	Unk	Unk	Unk	Unk	Unk	CNT,SSP, SL,NL,CT, PSP	Direct

TABLE III-3
COMBINATION ACID PICKLING SUMMARY TABLE
PAGE 7

Plant Code No.	Line No.	Process Product	Process Mode	Capacity (Tons/Day)	1st Year Production	Applied Flow (Gallons/ton)			Discharge Flow (Gallons/ton)			Treatment Components	Discharge Mode
						Rinses	Scrubber	Conc.	Rinses	Scrubber	Conc.		
0776C	*	*	*	*	*	*	*	*	*	*	*	*	*
0776F	01	Bar Wire, H_2SO_4,HCl	Batch	26	1961	169	-	1.2	169	-	1.2(1)	FLP,NC,FP,	Direct
0776G	01	Bar Rod Wire, HNO_3,Muriatic	Batch	5	1925(1950)	1050	-	18.7	1050	-	18.7	FDSP,FP,NC	Direct
0776H	01	Sheet,H_2SO_4, HNO_3	Batch	13	1902	3303	-	42.7	3303	-	42.7	CNT,NW,CL	Direct
0776J	01	Wire,HNO_3,HF, Muriatic	Batch	8.1	1975	360	Unk	-	360	Unk	-	CNT,NL	(POTW)
0792A	01(a)	Rod Wire, H_2SO_4,HCl	Batch	54	1925	180	-	4	180	-	4(1)	None	POTW
0796A	*	*	*	*	*	*	*	*	*	*	*	*	*
0856E	+01	Sheet Plate,HNO_3, HF	Batch	78	1957	922	-	123	922	-	123	CNT,NL,SL	Direct
0856H	01	Plate,HNO_3,HF	Batch	125	1968	338	40.2	13.4	338	40.2	13.4(1)	CNT,NL, PSP,SSP,SS	Direct
0860B	01	Strip,H_2SO_4, HNO_3,HF	Cont.	390	1942(1957)	2585	738	14.8	2585	738	14.8	CNT,SS	Direct
0860F	+01(a)	Wire,H_2SO_4, HCl	Cont.	45	1962	0	11520	864	0	640	864	CNT,SSP,FP, SC,T,VF,NA, CT,DW	Direct
0884E	01	Tube,HF,HNO_3	Batch	24	1968	[650]	[5400]	6.3	[650]	[10]	6.3	CNT,NL,PSP,E,FLP SSP	POTW
0884F	01	Tube,HNO_3,HF	Batch	4.5	1970	<1	-	<1	0	-	<1(1)	None	Hauled
0900	01	HNO_3,HF	Cont.	[182]	Unk	[1888]	[157]	Unk	[917]	[157]	Unk	CR,NL,E,SS,CL, T,SC	
0948F	+01(a)	Pipe,H_2SO_4, HNO_3	Cont.	82	1959	176	882	Unk	176	Unk	Unk	None	Direct

TABLE III-3
COMBINATION ACID PICKLING SUMMARY TABLE
PAGE 8

KEY TO ABBREVIATIONS

ARF	:	Recovery of Acid via Fume Filters
CSD	:	Centrifuge Sludge Dewatering
DC	:	Dechlorination (Sulfur Dioxide)
FIR	:	Ferrous Iron Removal by Air Sparging
FLFC	:	Flocculation with Ferric Chloride
FLW	:	Flocculation with Wastes
FLWPL	:	Flocculation with Waste Pickle Liquor
FP	:	Pressure Filtration
LS	:	Lamella Separator
NAL	:	Neutralization with Alum
NAM	:	Neutralization with Ammonia
NU	:	Neutralization with Unknown
NR	:	Not Reported
pHS	:	pH Stabilization
SAPT	:	Sent to Another Plant for Treatment
UNK	:	Unknown
+	:	Represents a facility that has been shutdown.
*	:	Confidential Data
(a)	:	Carbon Steel Mill
	:	Number in brackets represents values received in the responses to the detailed questionnaires.
NOTE	:	See Table VII-1 for other general abbreviation.
	:	All data was derived from the basic questionnaire response with the exception of data in brackets or parentheses. Data in brackets were derived from the plant sampling visit data or the detailed questionnaire responses. Data in parentheses represent treatment systems which were installed after 1/178.

TABLE III-4

SULFURIC ACID PICKLING DATA BASE

	No. of Operations	% of Total No. of Operations	Daily Capacity of Operations (Tons)	% of Total Daily Capacity
Operations sampled for original study	15	6.0	16,743	13.2
Operations sampled for toxic pollutant study	11	4.4	5,908	4.7
Total number of operations sampled	26	10.5	22,641	17.9
Operations selected for the detailed DCP	18 incl. 3 above	7.3 incl. 1.2 above	5,756 incl. 3,345 above	4.5 2.6
Operations sampled and/or solicited via detailed DCP	41	16.5	25,052	19.8
Operations responding to basic DCP	191	77.0	107,570	85.0
Estimated total number of sulfuric acid picklers	248	100.0	126,550	100.0

TABLE III-5

HYDROCHLORIC ACID PICKLING DATA BASE

	No. of Operations	% of Total No. of Operations	Daily Capacity of Operations (Tons)	% of Total Daily Capacity
Operations sampled for original study	14*	10.4	19,110	16.3
Operations sampled for toxic pollutant study	9 incl. 2 above	7.8 incl. 1.7 above	6,864 incl. 1,197 above	5.9 incl. 1.0 above
Total number of operations sampled	20	17.4	24,777	21.2
Operations selected for the detailed DCP	13 incl. 2 above	11.3 incl. 1.7 above	14,785 incl. 2,196 above	12.6 incl. 1.9 above
Operations sampled and/or solicited via detailed DCP	31	27.0	37,366	31.9
Operations responding to basic DCP	98	85.2	100,155	85.5
Estimated total number of hydrochloric acid picklers	115	100	117,140	100

*: Two of these plants are Canadian plants and are not included in any percentage or capacity figures.

TABLE III-6

COMBINATION ACID PICKLING DATA BASE

	No. of Operations	% of Total No. of Operations	Daily Capacity of Operations (Tons)	% of Total Daily Capacity
Operations sampled for original study	8	5.3	975.9	4.8
Operations sampled for toxic pollutant study	6 incl. 1 above	3.9 incl 0.7 above	496.8 incl. 183 above	2.4 incl. 0.9 above
Total number of operations sampled	13	8.6	1,289.7	6.4
Operations selected for the detailed DCP	5 incl. 2 above	2.3 incl. 1.3 above	1,133.6* incl. 89.4 above	5.6 incl. 0.4 above
Operations sampled and/or solicited via detailed DCP	18	11.8	2,333.9	11.5
Operations responding to basic DCP	129	84.9	17,214*	85.0
Estimated total number of combination acid picklers	152	100.0	20,251*	100.0

*: Confidential line capacity not included in this total.

TABLE III-7

SUMMARY OF SAMPLED OPERATIONS
ACID PICKLING OPERATIONS

SULFURIC ACID

Sample Code	Reference Code	Type of Operation	Process Product	Steel Type
I-2A	0856P	Batch	Rod and Wire	Carbon
I-2B	0856P	Batch	Rod and Wire	Carbon
O-2	0590	Batch	Wire	Carbon
P-2	0312	Batch	Bars, Shapes, and Tubing	Carbon
Q-2	0894	Batch	Rod and Wire	Carbon
R-2	0240B	Batch	Tube	Carbon
S-2	0256G	Batch	Pipe and Tube	Carbon
090	0476A	Batch	Pipe and Tube	Carbon
091	0612	Batch	Rod and Bar	Carbon
092	0088A	Batch	Pipe and Tube	Carbon
096	0112I	Batch	Fasteners and Special Shapes	Carbon
098	0684D	Batch	Bars, Rods and Special Shapes	Specialty
R	0240A	Batch	Billets and Bars	Specialty
H-2A	0432A	Continuous	Strip	Carbon
H-2B	0432A	Continuous	Strip	Carbon
QQ-2	0584E	Continuous	Sheet	Carbon
SS-2	0112A	Continuous	Sheet and Strip	Carbon
TT-2	0856D	Continuous	Strip	Carbon
WW-2	0868A	Continuous	Strip and Sheet	Carbon
T-2	0792B	Continuous	Strip	Carbon
094A	0948C	Continuous	Sheet	Carbon
094B	0948C	Continuous	Strip	Carbon
097	0760	Continuous	Strip	Carbon

TABLE III-7
SUMMARY OF SAMPLED OPERATIONS
ACID PICKLING OPERATIONS
PAGE 2

HYDROCHLORIC ACID

Sample Code	Reference Code	Type of Operation	Process Product	Steel Type
I-2	0856P	Continuous	Wire and Rod	Carbon
U-2	0480A	Batch	Rod	Carbon
V-2	0936	Batch	Rod and Wire	Carbon
W-2	*	Continuous	Strip	Carbon
X-2	0060B	Continuous	Strip	Carbon
Y-2	*	Continuous	Strip	Carbon
Z-2	0396D	Continuous	Strip	Carbon
AA-2	0384A	Continuous	Strip	Carbon
BB-2	0060	Continuous	Strip	Carbon
091	0612	Continuous	Wire	Carbon
093	0396D	Continuous	Strip	Carbon
095	0584F	Continuous	Strip	Carbon
099	0528B	Continuous	Strip	Carbon
100	0384A	Continuous	Strip	Carbon

COMBINATION ACID

Sample Code	Reference Code	Type of Operation	Process Product	Steel Type	Acids Used In Process
A(1)	0900	Continuous	Sheet and Strip	Specialty	HF/HNO_3
D	0248B	Continuous	Strip	Specialty	H_2SO_4, HNO_3, HF
I	0432K-02	Continuous	Sheet	Specialty	H_2SO_4, HNO_3, HF
O	0176	Continuous	Strip	Specialty	Unk, HNO_3, HF
121(1)	0900	Continuous	Sheet and Strip	Specialty	HF/HNO_3
U	0748	Batch	Pipe and Tube	Specialty	Unk
123	0088A	Batch	Tubes	Specialty	HNO_3, HF
124	0088D	Batch	Tubes	Specialty	HNO_3/HF
C	0424-01	Batch	Plate, Bar	Specialty	$H_2SO_4, HNO_3/HF$
F	0856H	Batch	Plate	Specialty	$H_2SO_4, HNO_3/HF$
L	0440A-01	Batch	Bar	Specialty	HCl, HNO_3
122	0176	Batch	Rod, Wire, Shapes	Specialty	$HCl, HNO_3, HNO_3/HF$, HCl/HNO_3
125	0884E	Batch	Tubes	Specialty	HF/HNO_3

(1) Operations A and 121 are the same operation that was visited on two different occasions.
* Plants W-2 and Y-2 are located outside of the United States, and have not been assigned a reference code number.

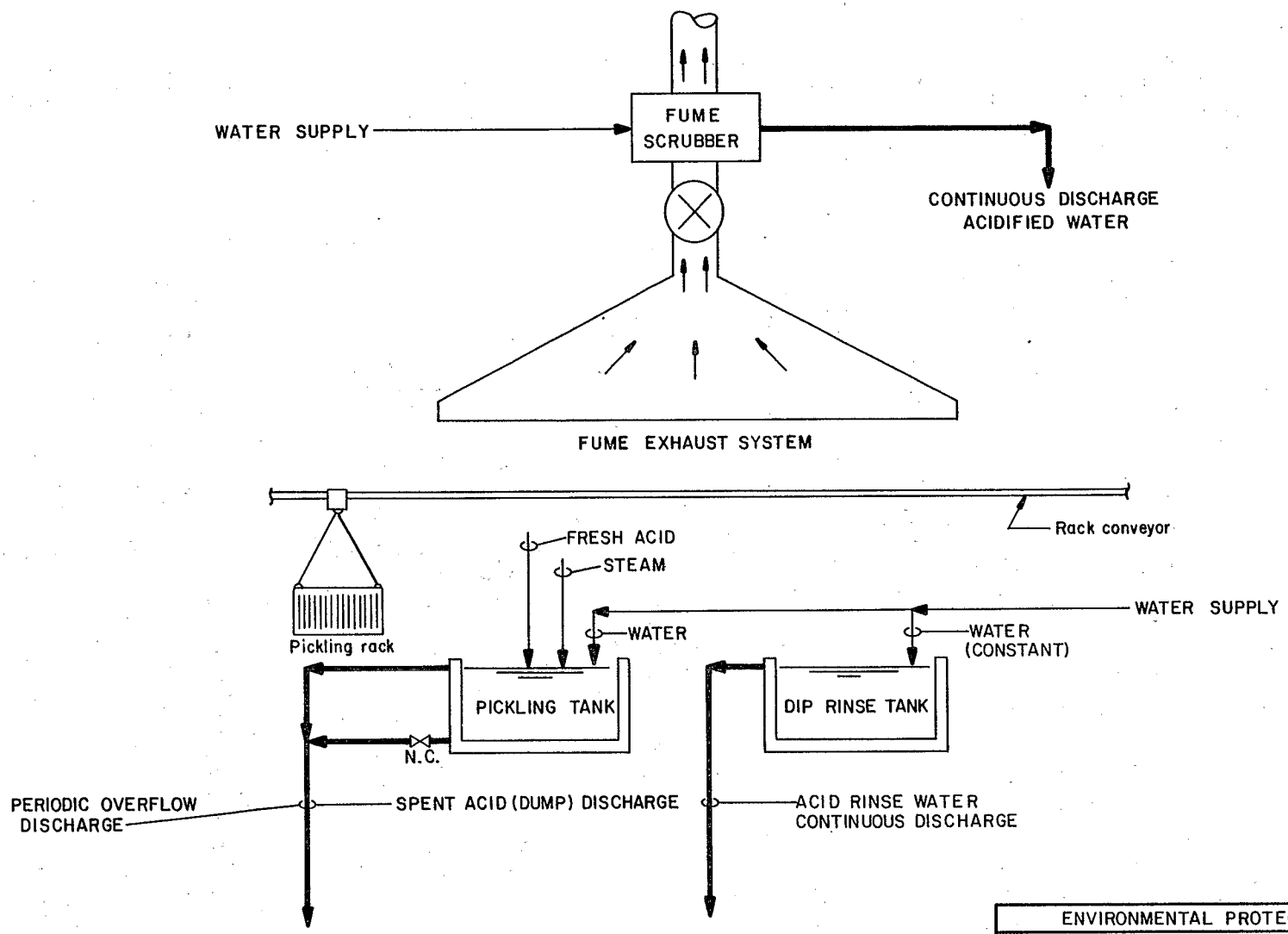

ENVIRONMENTAL PROTECTION AGENCY

STEEL INDUSTRY STUDY
BATCH PICKLING
SULFURIC & HYDROCHLORIC ACID
PROCESS FLOW DIAGRAM

Dwn. 3/27/79

FIGURE III-1

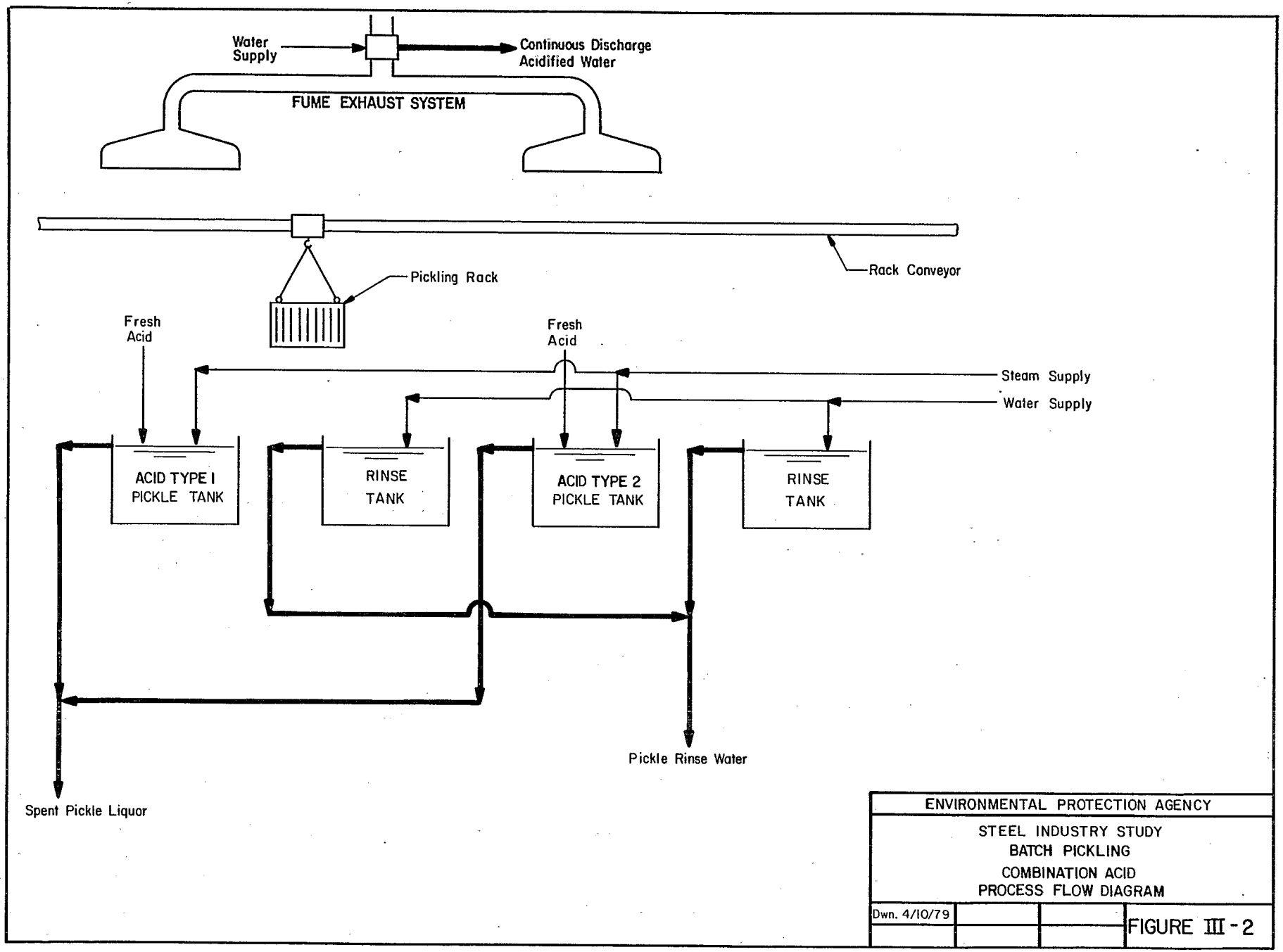
Water Supply
Continuous Discharge Acidified Water
FUME EXHAUST SYSTEM
Pickling Rack
Rack Conveyor
Fresh Acid
Fresh Acid
Steam Supply
Water Supply
ACID TYPE I PICKLE TANK
RINSE TANK
ACID TYPE 2 PICKLE TANK
RINSE TANK
Pickle Rinse Water
Spent Pickle Liquor
ENVIRONMENTAL PROTECTION AGENCY
STEEL INDUSTRY STUDY
BATCH PICKLING
COMBINATION ACID
PROCESS FLOW DIAGRAM
Dwn. 4/10/79
FIGURE III-2

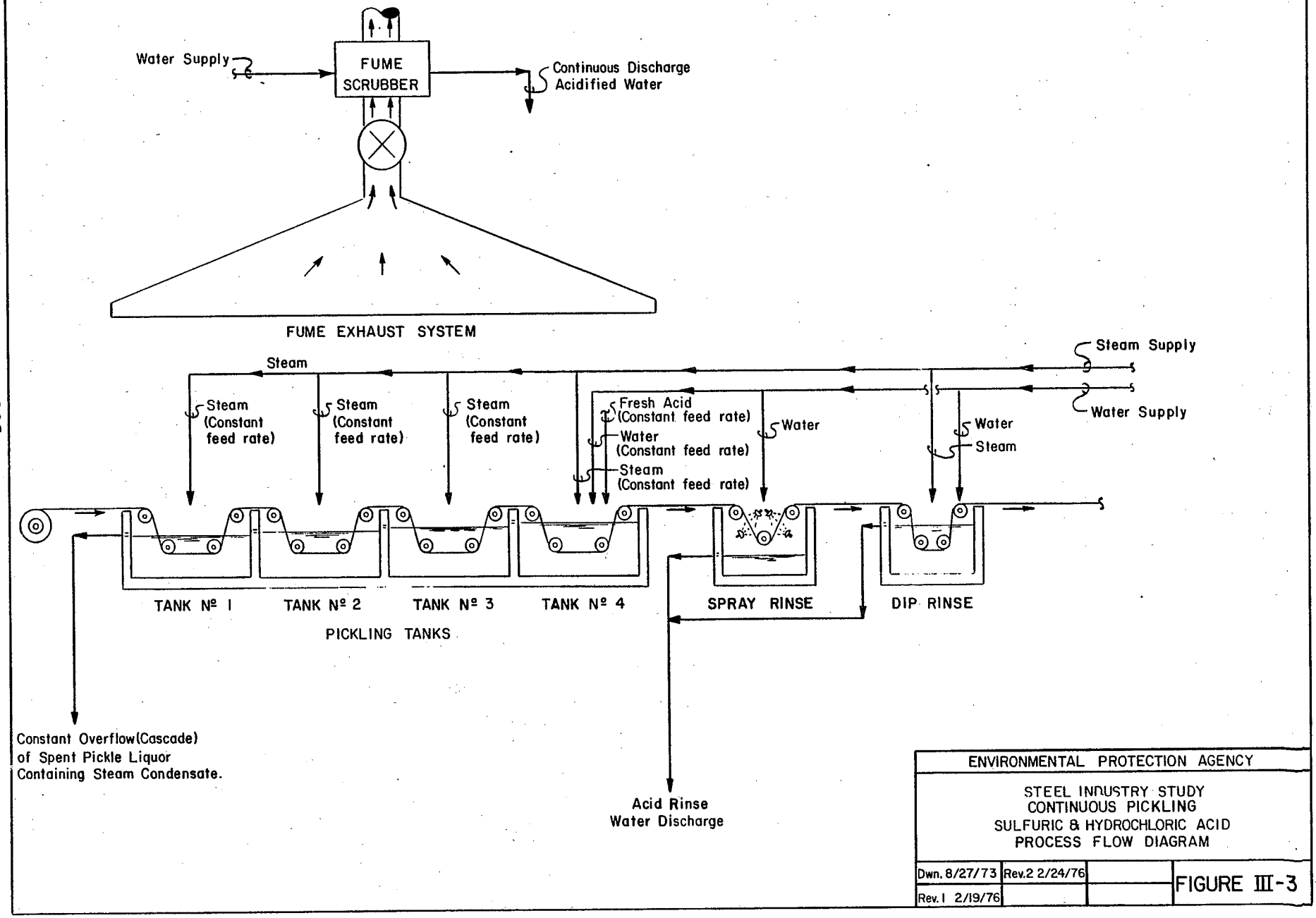

ENVIRONMENTAL PROTECTION AGENCY

STEEL INDUSTRY STUDY
CONTINUOUS PICKLING
SULFURIC & HYDROCHLORIC ACID
PROCESS FLOW DIAGRAM

Dwn. 8/27/73	Rev.2 2/24/76		FIGURE III-3
Rev. I 2/19/76			

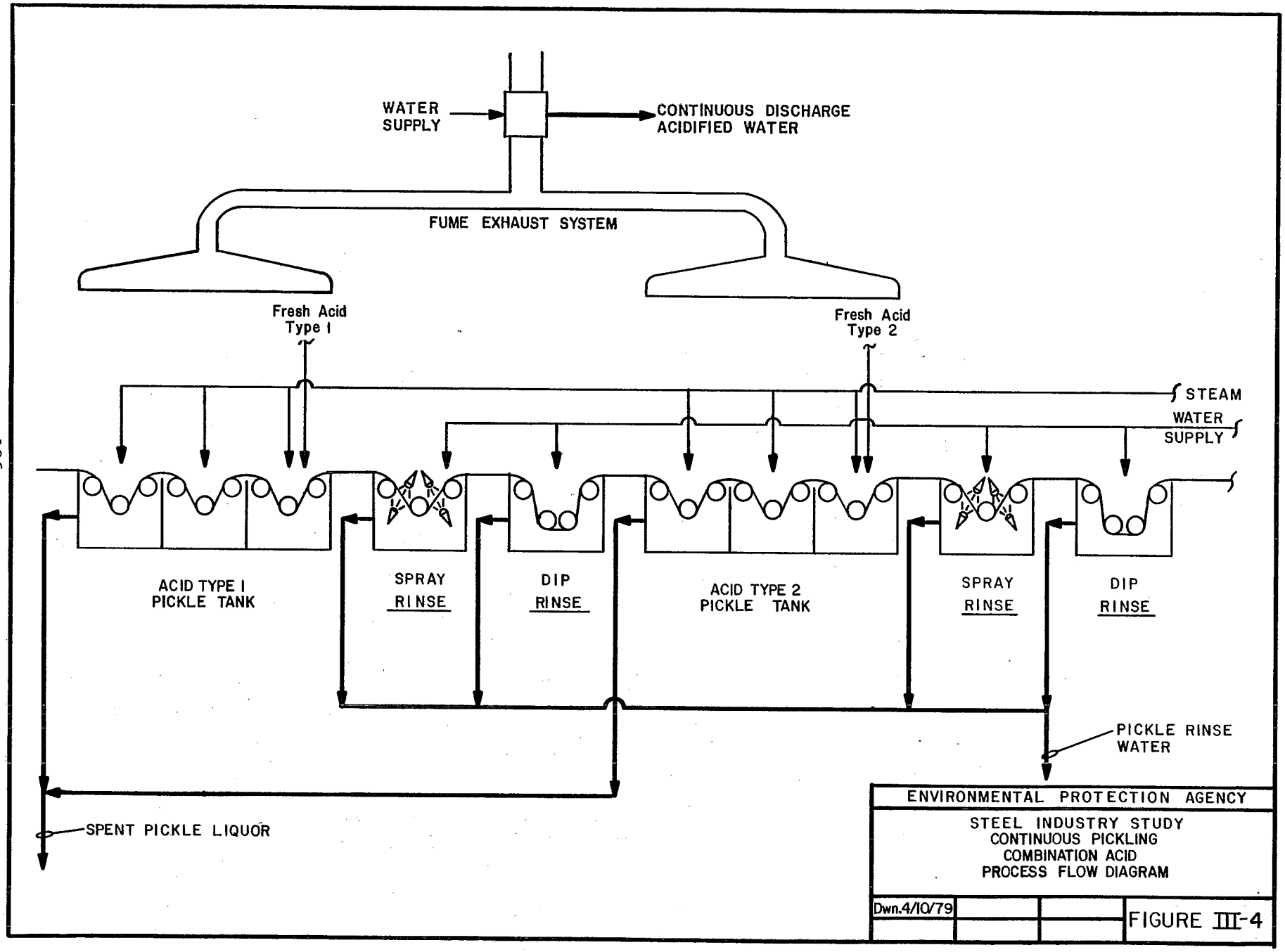
WATER SUPPLY
CONTINUOUS DISCHARGE ACIDIFIED WATER
FUME EXHAUST SYSTEM
Fresh Acid Type 1
Fresh Acid Type 2
STEAM
WATER SUPPLY
ACID TYPE 1 PICKLE TANK
SPRAY RINSE
DIP RINSE
ACID TYPE 2 PICKLE TANK
SPRAY RINSE
DIP RINSE
PICKLE RINSE WATER
SPENT PICKLE LIQUOR
ENVIRONMENTAL PROTECTION AGENCY
STEEL INDUSTRY STUDY
CONTINUOUS PICKLING
COMBINATION ACID
PROCESS FLOW DIAGRAM
Dwn.4/10/79
FIGURE III-4

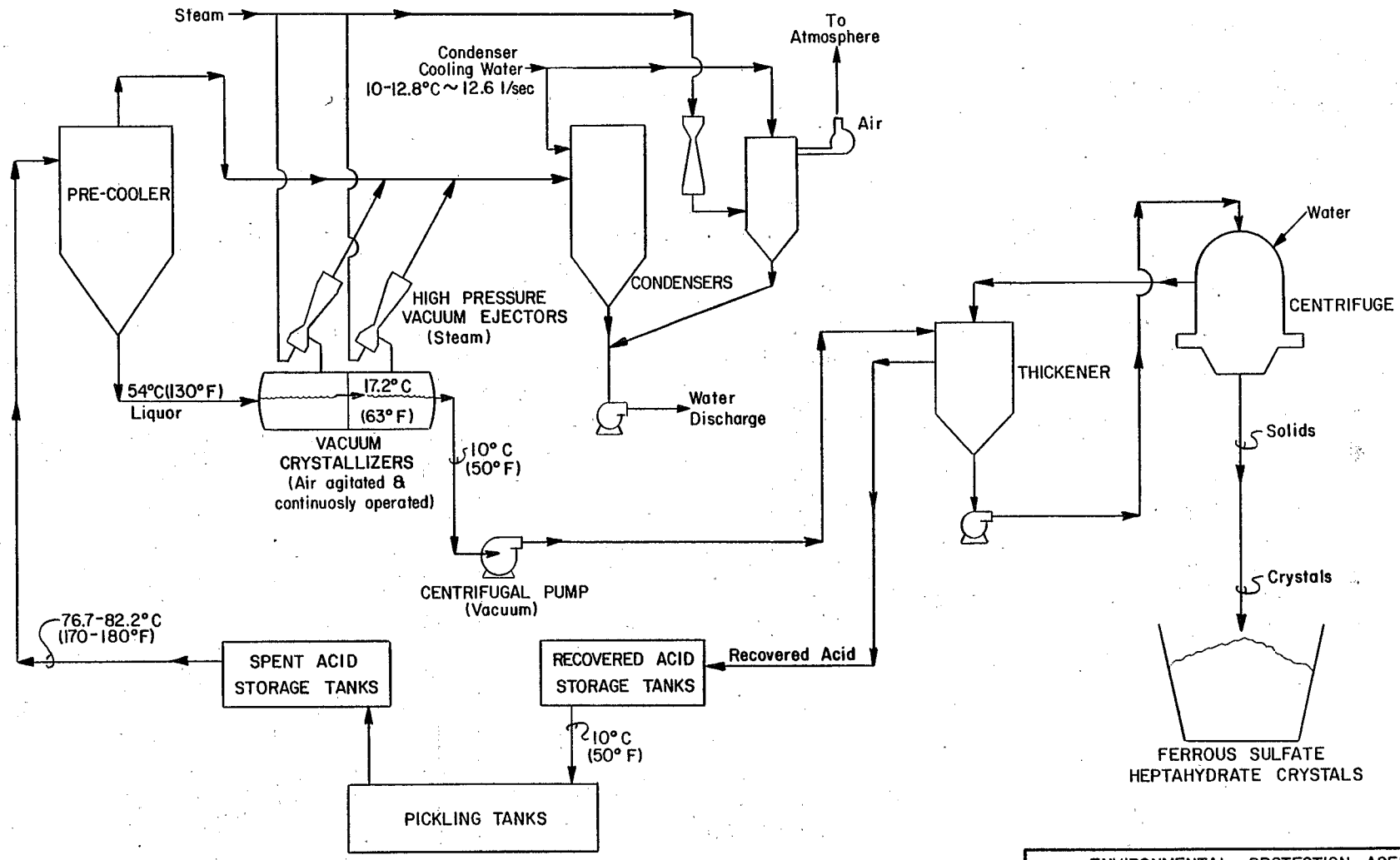

ENVIRONMENTAL PROTECTION AGENCY

STEEL INDUSTRY STUDY
SULFURIC ACID RECOVERY
PROCESS FLOW DIAGRAM
TYPE I

Dwn. 5/13/74	Rev.2-2/26/76		FIGURE III-5
Rev. 1-2/20/76			

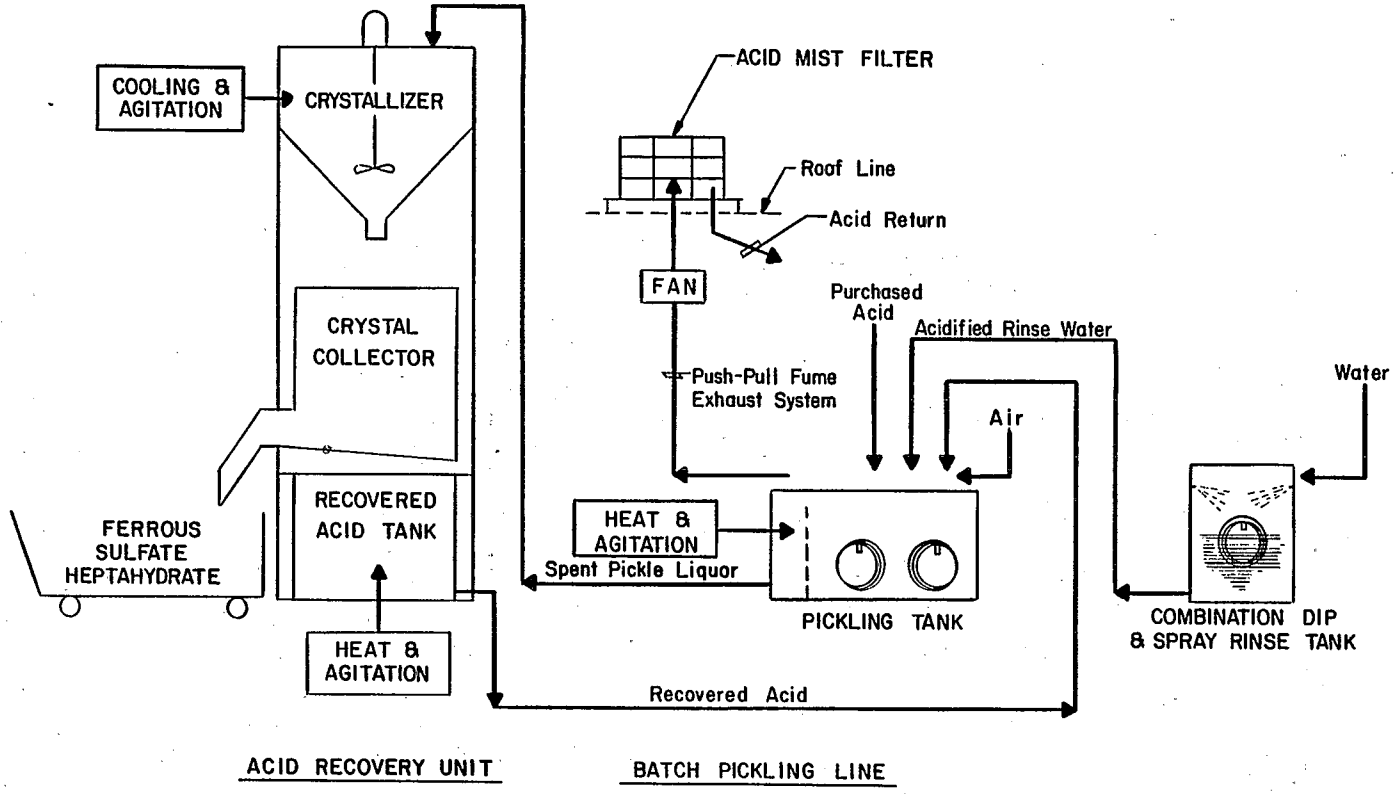

ENVIRONMENTAL PROTECTION AGENCY			
STEEL INDUSTRY STUDY SULFURIC ACID RECOVERY PROCESS FLOW DIAGRAM TYPE II			
Dwn. 5/11/74	Rev.2-2/25/76		FIGURE III-6
Rev. 1-2/20/76			

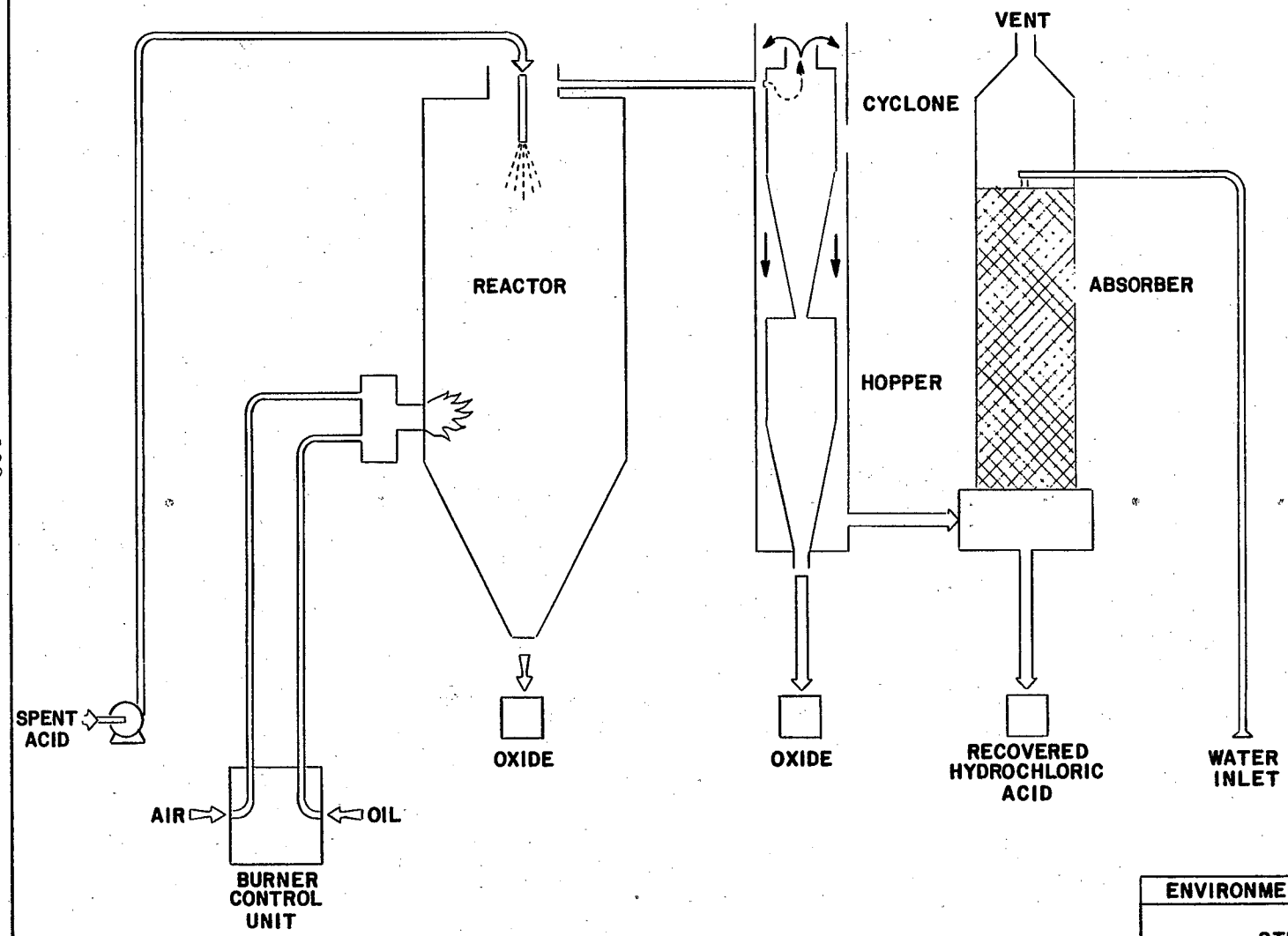

ENVIRONMENTAL PROTECTION AGENCY

STEEL INDUSTRY STUDY
HCl REGENERATION TYPE I
PROCESS FLOW DIAGRAM

Dwg. 5/4/74 Rev. 2/26/76
Rev. 2/20/76

FIGURE III-7

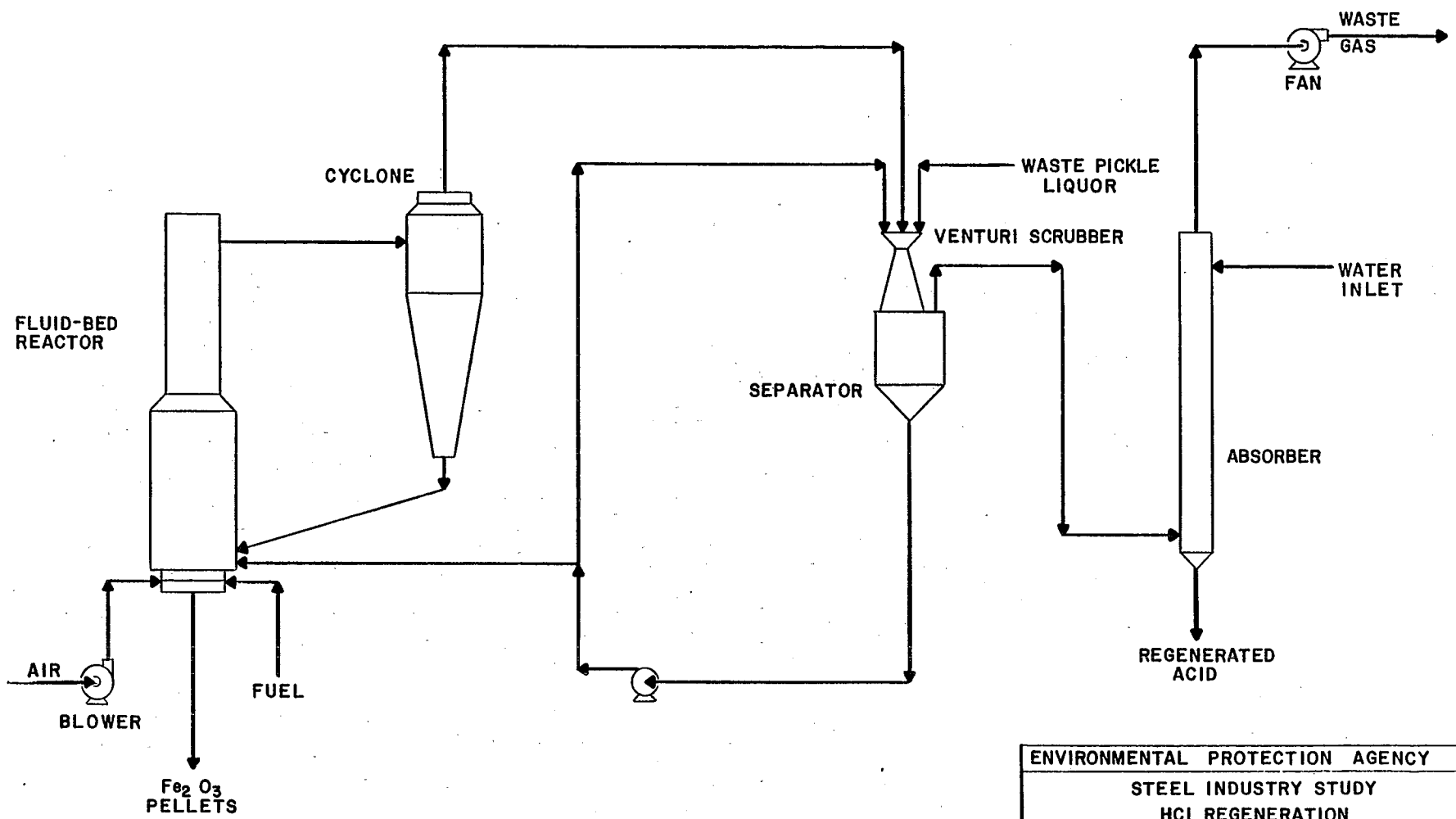

ENVIRONMENTAL PROTECTION AGENCY

STEEL INDUSTRY STUDY
HCl REGENERATION
TYPE II FLUID BED ROASTER
PROCESS FLOW DIAGRAM

Dwg.5/4/74 Rev.2/26/76
Rev.2/20/76

FIGURE III-8

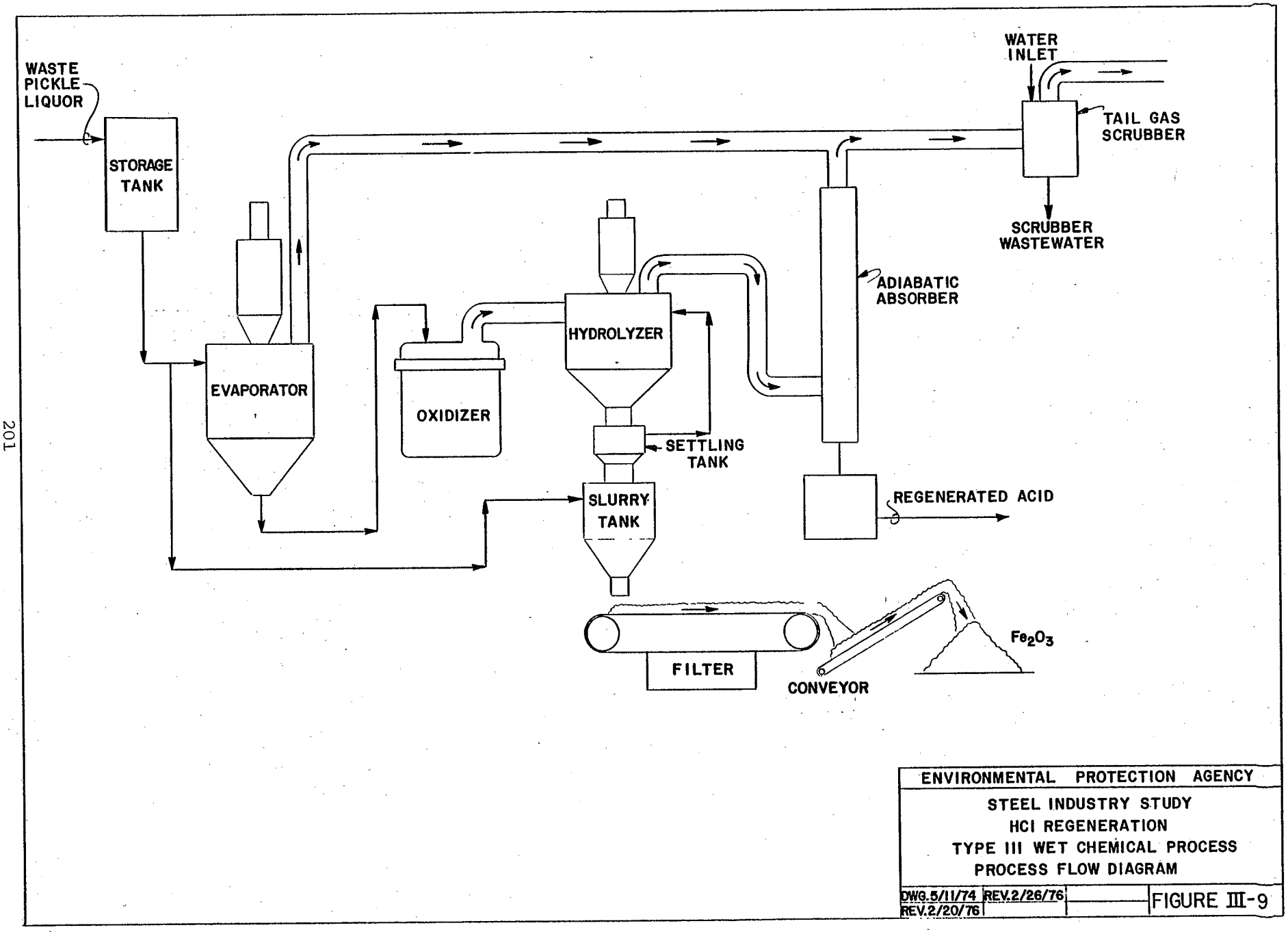

ENVIRONMENTAL PROTECTION AGENCY

STEEL INDUSTRY STUDY
HCl REGENERATION
TYPE III WET CHEMICAL PROCESS
PROCESS FLOW DIAGRAM

DWG.5/11/74 REV.2/26/76 REV.2/20/76

FIGURE III-9

ACID PICKLING SUBCATEGORY

SECTION IV

SUBCATEGORIZATION

The Agency considered several factors to determine whether further subdivision of the pickling process is appropriate. The applicability of these factors to the pickling process and the rationale for the subdivision of the acid pickling subcategory are presented below.

In the originally promulgated regulation, the Agency subdivided the pickling process into three subgroups. That division has been retained. However, each subdivision has been segmented further, as follows.

Segmentation (1976 Regulations)	Revised Segmentation
<u>Sulfuric Acid</u>	<u>Sulfuric Acid</u>
a. Batch Operations - Acid Recovery	a. Strip, Sheet and Plate Products
b. Continuous Operations - Neutralization	b. Rod, Wire and Coil Products
c. Continuous Operations - Acid Recovery	c. Bar, Billet and Bloom Products
	d. Pipe, Tube and Other Products
	e. Fume Scrubbers
<u>Hydrochloric Acid</u>	<u>Hydrochloric Acid</u>
a. Neutralization	a. Strip, Sheet and Plate Products
b. Acid Regeneration	b. Rod, Wire and Coil Products
	c. Pipe, Tube and Other Products
	d. Fume Scrubbers
	e. Absorber Vent Scrubbers
<u>Combination Acid</u>	<u>Combination Acid</u>
a. Batch Operations - Pipe and Tube	a. Strip, Sheet and Plate Products - Batch
b. Batch Operations - Other	b. Strip, Sheet and Plate Products - Continuous
c. Continuous Operations	c. Rod, Wire and Coil Products
	d. Bar, Billet and Bloom Products
	e. Pipe, Tube and Other Products
	f. Fume Scrubbers

For all acid pickling operations, one common element which affects the segmentation of the process is the type of product pickled. This is

in turn related to the type of process (i.e., batch or continuous). Strip, sheet, rod and wire products are the only products that are pickled in both continuous and batch processes, while all other products are batch pickled. The water application and discharge flow rates vary with the type of product processed.

The Agency examined other factors, but found that the discharge flow rate was the only other factor which has a significant effect upon segmentation. The Agency analyzed line age and size to determine if those factors had an effect upon wastewater quality or quantity, but found no significant relationship. Also, the Agency considered such factors as raw material and wastewater characteristics, but found that none of these factors warrant further subdivision or segmentation. While water use was found to have an effect upon specific effluent limitations, this variation did not require further segmentation other than that noted previously. Each of these elements is discussed in greater detail below.

Factors Considered in Subdivision and Segmentation

Manufacturing Process and Equipment

Within the acid pickling subcategory, the processes employed and the equipment used are basically the same throughout the industry. The Agency found only two significant differences in acid pickling operations that could possibly affect subdivision. The first involves the manner in which the pickling process is performed. While some operations pickle products in a batch fashion, other operations use a continuous process to pickle products such as strip, sheet, rod or wire. These operations are distinctly different. However, the discharge flow rates for most operations are similar. Combination acid pickling of strip, sheet and plate products have been segmented to account for the difference in discharge flow rates between batch and continuous operations. No differences in flows were found between batch and continuous sulfuric and hydrochloric acid pickling of strip, sheet, and plate and hydrochloric acid pickling of rod, wire, and coil products.

The second difference is in equipment used at acid pickling operations. Fume scrubber systems which collect and scrub the fumes generated in the pickling process are used at some lines. Scrubbers are also used to clean the absorber vent gasses emitted from hydrochloric acid regeneration systems. These scrubbers generate considerable quantities of wastewater and consequently increase the pollutant load in the discharge from the pickling process. The characteristics of the wastewater discharged from these scrubbers are similar to the other wastewaters discharged from the pickling operation. However, separate segments have been established for fume scrubber and absorber vent scrubber discharges, since not all pickling lines have scrubbers installed, and the discharge rate is unrelated to product type or production rate.

Final Products

An analysis was done to determine whether the products being processed affect the pickling process, wastewater characteristics, or other significant factors. The spent pickle liquor and fume scrubber wastewater characteristics were found to be relatively constant for each subdivision, and independent of the type of product pickled. For this analysis, the Agency therefore evaluated only rinsewater quality, since rinsewater is the only wastewater source which could be significantly affected by variations in the product and, thereby, affect segmentation.

A. Sulfuric Acid Pickling Operations

Sulfuric acid pickling operations process a wide variety of products, some as final products and others for further processing (i.e., cold reduction, coating, oiling, or painting). The most common steel shapes processed by sulfuric acid pickling are: strip/sheet/plate; rod/wire/coil; bar/billet/bloom; and pipe/tube/other products. The strip/sheet/plate grouping comprises 92.5% of the continuous sulfuric acid pickling operations, while the rod/wire/coil, bar/billet/bloom, and pipe/tube/other groups make up 92.5% of all batch operations.

Sampling data do not indicate any significant differences in rinsewater quality between any of the product types pickled in sulfuric acid solutions. The Agency evaluated all of the flow (gal/ton) data reported by the industry in the questionnaires. This analysis showed that the discharge flow rates are related to the type of product pickled, and further, on the basis of flow rates and operating practices, the products should be divided into the four groups identified above. No significant differences in flow were found between batch and continuous pickling of strip/sheet/plate products. As a result, the Agency segmented the sulfuric acid pickling subdivision into these four product groupings to account for the flow variations.

B. Hydrochloric Acid Pickling

The most common steel products processed by hydrochloric acid pickling are: strip/sheet/plate; rod/wire/coil; and pipe/tube/other products. The seven batch hydrochloric acid picklers in operation process all three types of product groupings. The continuous hydrochloric acid pickling operations process products from the strip/sheet/plate and rod/wire/coil groups.

Sampling data do not indicate any significant differences in the qualities of the rinsewaters generated for the three types of products. However, as for sulfuric acid pickling, the Agency found that the discharge flow rates varied with the type of products pickled, and that the products should be divided into the three product groups identified above. The flow (gal/ton)

data reported by the industry indicated no significant differences in flows between batch and continuous pickling of strip/sheet/plate and rod/wire/coil products. The hydrochloric acid pickling subdivision has, therefore, been segmented into these three product groupings.

C. Combination Acid Pickling

As in the other subdivisions, the products processed in combination acid pickling operations are strip/sheet/plate, rod/wire/coil, bar/billet/bloom and pipe/tube/other products. Strip/sheet/plate products comprise 92.4% of the continuous operations. In contrast, batch operations consist mainly of bar/billet/bloom and pipe/tube/other products (81.3%).

As in the other two acid pickling subdivisions, no significant differences were found in the rinsewater quality. The flow rates were found to vary according to product type. The four groupings of products identified in the previous paragraph were determined to be sufficient to account for the flow variations between product type. In this instance, however, the Agency also found a difference in discharge flow rates between batch and continuous pickling of strip/sheet/plate products. The Agency has segmented the combination acid pickling subdivision to separately include a batch and a continuous strip/sheet/plate segment. Separate segments are also included for the other three product groupings.

Raw Materials

A. Type of Acid Used

The most signficant raw material - the acid used for pickling - forms the basis for subdividing the pickling subcategory into sulfuric, hydrochloric, and combination acid subdivisions. The choice of the acid or acids used in the process is usually dictated by the types of steel to be pickled and the desired surface characteristics after pickling. Sulfuric acid penetrates the oxide layer and reacts with the base metal to form hydrogen, which aids in removing the oxide scale. The scale eventually dissolves in the acid bath forming ferrous sulfate. Hydrochloric acid reacts directly with the oxide scale, forming soluble ferrous and ferric chloride. Generally, combination acid pickling is the preferred process for alloy, stainless, and other specialty steels. In addition to the iron salts, which result from pickling, other metals found in the steel are dissolved in the acid bath. These are discussed in Section VI.

B. Type of Steel Pickled

The other significant raw materials are the carbon steel and specialty steel products being pickled. The type of steel pickled is often the determining factor for the types of acids used. For specialty steel operations, a much broader range of

acids is used (hydrochloric, sulfuric, nitric, and hydrofluoric acids). Although the exact order of pickling and the types of acids used vary from plant to plant, most operations use hydrochloric or sulfuric acids at the head of the pickling lines and finish with a mixture of nitric and hydrofluoric acids. Carbon steel operations use hydrochloric and sulfuric acid pickling. Nitric acid is used at one carbon steel line, and hydrofluoric acid is not used at any line processing carbon steel. Hence, the high levels of fluorides and nitrates found in the discharges from specialty steel operations are not found in discharges from carbon steel lines.

About 5.2% of the sulfuric acid pickling operations and only 2.9% of the hydrochloric acid operations pickle specialty steel products. Raw wastewaters from pickling specialty steels contain higher levels of toxic metals and other pollutants than do wastewaters from pickling carbon steel, since specialty steels contain a wider range and higher levels of alloying elements (metals) than do carbon steels. Nearly all specialty steels undergo combination acid pickling only, as discussed previously. Thus, the difference in wastewater quality between carbon and specialty steels is accounted for by the basic subdivision of the acid pickling subcategory into sulfuric, hydrochloric, and combination acids. The difference in average flow rates from operations pickling carbon or specialty steel is also accounted for in this basic subdivision. For these reasons, the Agency concluded that it is not necessary to segment or subdivide further, based upon the type of raw material used (i.e., the type of steel processed).

Wastewater Characteristics

As noted above, wastewaters from acid pickling operations originate from rinsewater, fume scrubbers, and spent acid solutions. Rinsewater flow is often the highest flow among the three sources and contains suspended solids and dissolved metals, and normally has a very low pH. Fume scrubber wastewaters are similar to rinsewaters in character. Flow rates through the scrubbers vary considerably, but discharge flows can be reduced to a consistent level through recycle of the wastewaters. The third source, the spent pickle liquor is lower in volume than the other sources but is the most highly contaminated. Because of the small volume and high pollutant levels, this waste is often hauled off-site for disposal. The concentration of dissolved metals and the volume of the combined discharge from pickling lines are dependent upon whether fume scrubbers are installed and whether the spent pickle liquor is hauled off-site. The primary types of pollutants contained in the wastewaters are, however, similar, regardless of the type of acid used and the type of steel processed (i.e., carbon or specialty).

The differences in wastewater characteristics are related primarily to the type of acid used. Sulfuric acid introduces sulfates into the

wastewater; hydrochloric acid introduces chlorides; and combination acid pickling introduces nitrates (nitric acid) and fluorides (hydrofluoric acid), as well as sulfates or chlorides where sulfuric or hydrochloric acids are also used. These variations in wastewater characteristics are accounted for in the subdivision by acid type.

Wastewater Treatability

The Agency analyzed the treatability of wastewaters from the different acid pickling operations. Data developed by the Agency during plant visits and supplied by the industry in DCP responses indicate that neutralization/precipitation followed by removal of suspended precipitates are commonly practiced to treat wastewaters from the different types of pickling operations. Similar effluent qualities for suspended solids, pH, and toxic metals are achieved at these operations. The only difference in treatment practices occurs at some sulfuric and hydrochloric pickling operations, where acid recovery and regeneration are practiced. Recovery of combination acid is not currently practiced in the industry. These methods result in different discharge flow rates and pollutant loads. These differences are accounted for in the basic subdivision by acid type and the segmentation of the hydrochloric acid subdivision to separately account for discharges from absorber vent scrubbers.

Size and Age

The Agency evaluated whether size or age of pickling operations are significant factors which warrant further subdivision or segmentation of the acid pickling subcategory.

Figures IV-1 through IV-12 are plots of applied rinsewater flow (gal/ton) vs. production (tons/turn) for the various acid pickling segments. The points on these plots are widely scattered, indicating no correlation between size and applied rinsewater flow, which is a major factor in pickling treatment system design. Hence, there is no basis to further subdivide or segment pickling operations on the basis of size.

The question of age was addressed in two ways. First, plots of applied rinsewater flow (gal/ton) vs. age (first year of production) similar to those noted above were made. These plots are also contained in Figures IV-1 through IV-12. These data show no correlation between the age of any type of pickling operation and the respective applied rinsewater flows. Secondly, the ability, ease and cost of retrofitting pollution control facilities was evaluated. Table IV-1 lists the older pickling operations which have been retrofitted with pollution control facilities. The fact that treatment facilities have been retrofitted on those older lines, and that similar effluent loads are discharged from these treatment facilities, demonstrates the feasibility of retrofitting pollution control equipment to plants of all ages. As part of its data gathering efforts, the Agency also obtained actual costs incurred by the industry to install retrofitted treatment facilities, specifically

including any costs due solely to retrofitting. In general, the industry reported either no specific retrofit costs or relatively small retrofit costs. Retrofit costs of about 14% of total treatment system costs were reported for one sulfuric acid pickling line. Based upon these data, the Agency concludes that the costs of retrofitting pollution control facilities on pickling lines are not substantial.

Based upon the above, the Agency finds that both old and newer production facilities generate similar raw wastewater pollutant loadings; that pollution control facilities can be and have been retrofitted to both old and newer production facilities without substantial retrofit costs; that these pollution control facilities can and are achieving the same effluent quality; and, that further subcategorization or further segmentation within this subcategory on the basis of age or size is not appropriate.

The Agency did, however, determine that flow reduction through cascade rinsing could not be installed at all existing pickling lines. This determination is based upon technical considerations rather than the age of the facility. The configuration and space limitations at certain plants would require major reconstruction of the pickling lines or mills in order to retrofit cascade rinse systems. This, however, does not provide a basis for further segmentation of the subcategory. Cascade rinsing has been evaluated as an alternate treatment system for all operations. The Agency did not base the promulgated effluent limitations and standards for existing sources on the use of cascade rinse systems.

Geographic Location

An examination of the raw waste characteristics, process water application rates, discharge rates, effluent quality, and other factors relating to plant location revealed no general relationship or pattern. Sulfuric acid pickling operations are located in 20 states. Hydrochloric acid operations are in 13 states, and combination acid pickling operations are in 15 states. Most of these lines are located in the major steel producing areas of Illinois, Indiana, Pennsylvania and Ohio. Table IV-2 is a summary of the location of all acid pickling operations for which DCP responses were received.

A small percent of the pickling operations are located in what could be considered "semi-arid" or "arid" regions. However, since no cooling systems are required to attain the limitations and standards, there will be no increased comsumption of water by these operations to achieve the appropriate limitations and standards. Additional details on this issue are presented in Section VIII.

Process Water Usage

Table IV-3 presents average applied rinsewater flow rates for each segment of each subdivision. These data illustrate the basic differences in rinsewater requirements among the segments and subdivisions. Also presented in Table IV-3 are spent pickle liquor

applied flows. These flows are fairly constant within each subdivision and amount to a relatively small percentage of the rinsewater flows for most of the segments. As a result, the Agency combined the discharge flows for spent pickle liquor and rinsewaters to establish the basic model treatment system flow rates rather than further segmenting each subdivision to separately account for these sources of wastewater.

The average applied fume scrubber flow for all acid pickling subdivisions is 135 gallons per minute. The average absorber vent scrubber discharge for hydrochloric acid regeneration systems is 100 gallons per minute. The scrubber discharges were found to be independent of production rates or product type. The Agency also evaluated whether these scrubber flows are related to the design gas flow through the scrubbers or to the type of scrubber used. Again the Agency found no correlation. Since these scrubbers are not used at every pickling line in the industry, the Agency established segments in each subdivision to separately account for scrubber discharges. The effluent limitations and standards for these segments are established on the basis of a daily mass discharge (kg/day) per scrubber rather than on the basis of production (kg/kkg).

TABLE IV-1

ACID PICKLING OPERATIONS
DEMONSTRATING THE ABILITY
TO RETROFIT POLLUTION CONTROL EQUIPMENT

Subcategory	Reference Code	Operation Age (Year)	Treatment Age (Year)
Sulfuric Acid Pickling	0020B	1954	1974
	0048F	1944	1969
	0060D	1957	1968
	0060M	1970	1977
	0088A	1936	1969
	0088D	1962	1971
	0112	1922	1977
	0112C	1926	1977
	0256F	1953	1975
	0384A	1958	1964
	And Others		
Hydrochloric Acid Pickling	0020C	1946	1977
	0112B	1936	1971
	0176	1961	1956
	0320	1936	1955
	0384A	1932	1970
	0396D	1967	1969
	0432C	1952	1964
	0448A	1954	1970
	0580A	1962	1967
	And Others		
Combination Acid Pickling	0020B	1947	1974
	0088A	1952	1969
	0112A	1926	1977
	0112H	1940	1951
	0256F	1953	1975
	0284A	1957	1971
	0584D	1940	1970
	0860F	1962	1977
	And Others		

TABLE IV-2

LOCATION OF ACID PICKLING OPERATIONS

SULFURIC ACID PICKLING

Location	Total Numbers	% of Total
Pennsylvania	52	27.2
Ohio	36	18.8
Illinois	17	8.9
Indiana	14	7.3
Maryland	14	7.3
California	11	5.8
Connecticut	8	4.2
Michigan	8	4.2
Texas	7	3.7
Alabama	6	3.1
New York	4	2.1
Missouri	3	1.6
Washington	3	1.6
Kentucky	2	1.0
Georgia	1	0.5
Colorado	1	0.5
Florida	1	0.5
Mississippi	1	0.5
New Jersey	1	0.5
West Virginia	1	0.5
Number of States = 20	191	100%

HYDROCHLORIC ACID PICKLING

Location	Total Numbers	% of Total
Ohio	16	16.3
Pennsylvania	14	14.3
Michigan	14	14.3
Illinois	13	13.3
California	8	8.2
Kentucky	7	7.1
Indiana	7	7.1
Alabama	5	5.1
West Virginia	3	3.1
New Jersey	3	3.1
Georgia	3	3.1
New York	3	3.1
Connecticut	2	2.0
Number of States = 13	98	100%

TABLE IV-2
LOCATION OF ACID PICKLING OPERATIONS
PAGE 2

COMBINATION ACID PICKLING

Location	Total Numbers	% of Total
Pennsylvania	69	53.5
Ohio	18	14.0
Wisconsin	7	5.4
Maryland	6	4.7
New York	4	3.1
Indiana	4	3.1
California	4	3.1
Massachusetts	3	2.2
Illinois	3	2.2
Delaware	2	1.6
Texas	2	1.6
New Jersey	2	1.6
Georgia	2	1.6
Michigan	2	1.6
Florida	1	0.8
Number of States = 15	129	100%

TABLE IV-3

AVERAGE PROCESS FLOW VALUES
ACID PICKLING SUBCATEGORY

	Applied Spent Pickle Liquor (gal/ton)	Applied Rinse (gal/ton)
SULFURIC ACID		
Strip/Sheet/Plate	20	160
Rod/Wire/Coil	20	260
Bar/Billet/Bloom	20	70
Pipe/Tube/Other	20	480
HYDROCHLORIC ACID		
Strip/Sheet/Plate	10	270
Rod/Wire/Coil	10	480
Pipe/Tube	10	1010
COMBINATION ACID		
Batch-Strip/Sheet/Plate	20	440
Cont.-Strip/Sheet/Plate	20	1480
Rod/Wire/Coil	20	490
Bar/Billet/Bloom	20	210
Pipe/Tube	20	750

The average applied fume scrubber flow for all acid pickling subdivisions is 135 gpm.

The average applied absorber vent scrubber flow for hydrochloric acid regeneration processes is 100 gpm.

FIGURE IV–1
ACID PICKLING SUBCATEGORY
SULFURIC – STRIP/SHEET/PLATE

APPLIED RINSE FLOW VS PRODUCTION CAPACITY

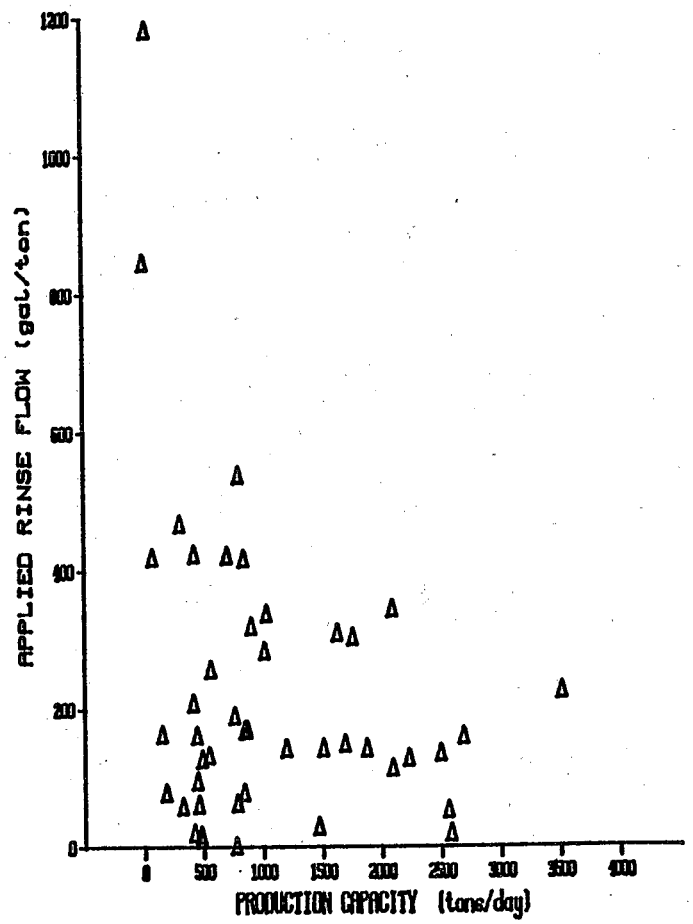

APPLIED RINSE FLOW VS AGE

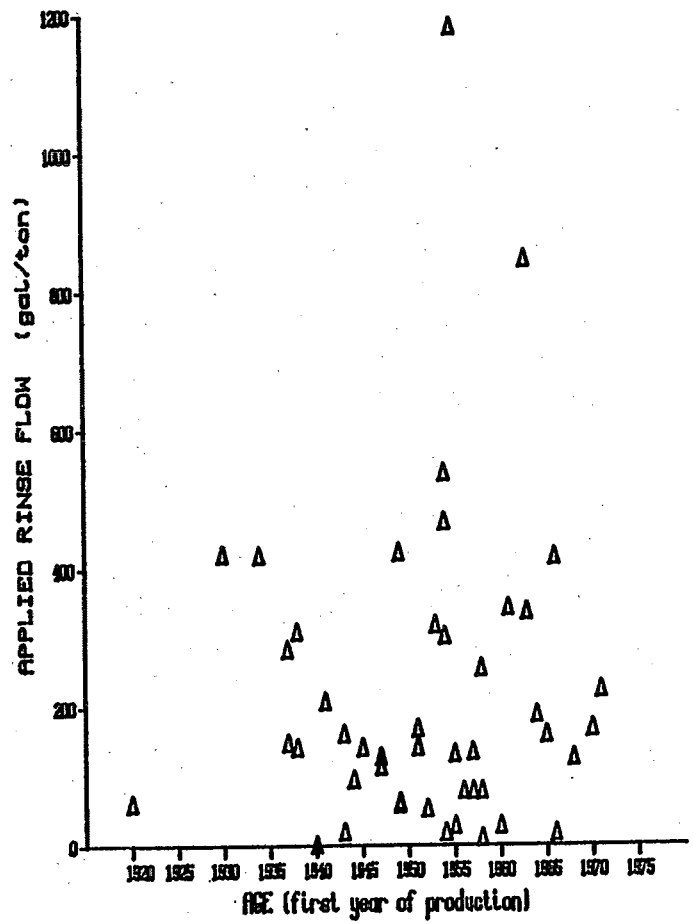

FIGURE IV-2
ACID PICKLNG SUBCATEGORY
SULFURIC – ROD/WIRE/COIL

APPLIED RINSE FLOW VS PRODUCTION CAPACITY

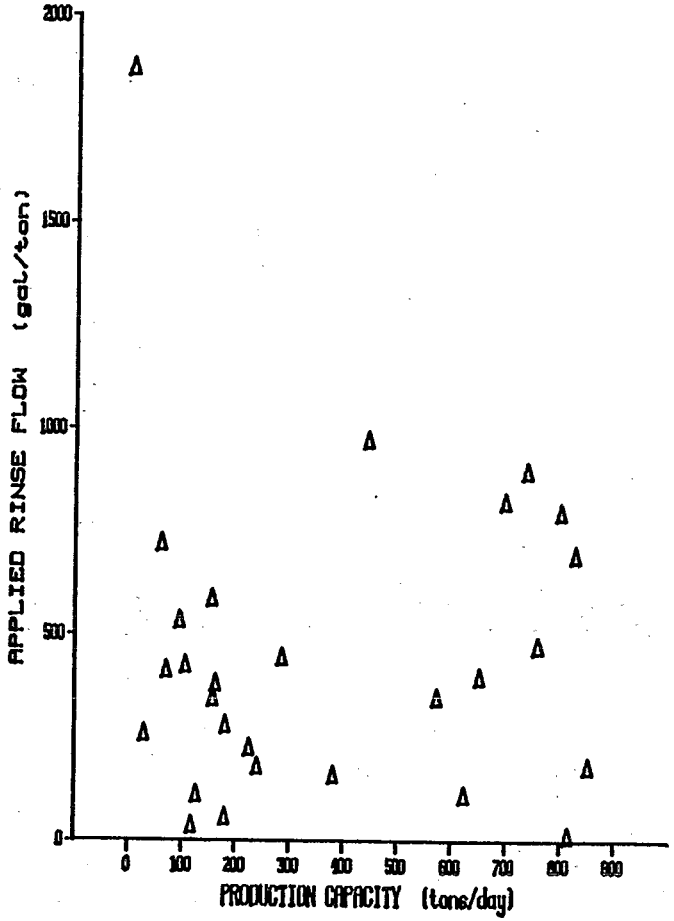

APPLIED RINSE FLOW VS AGE

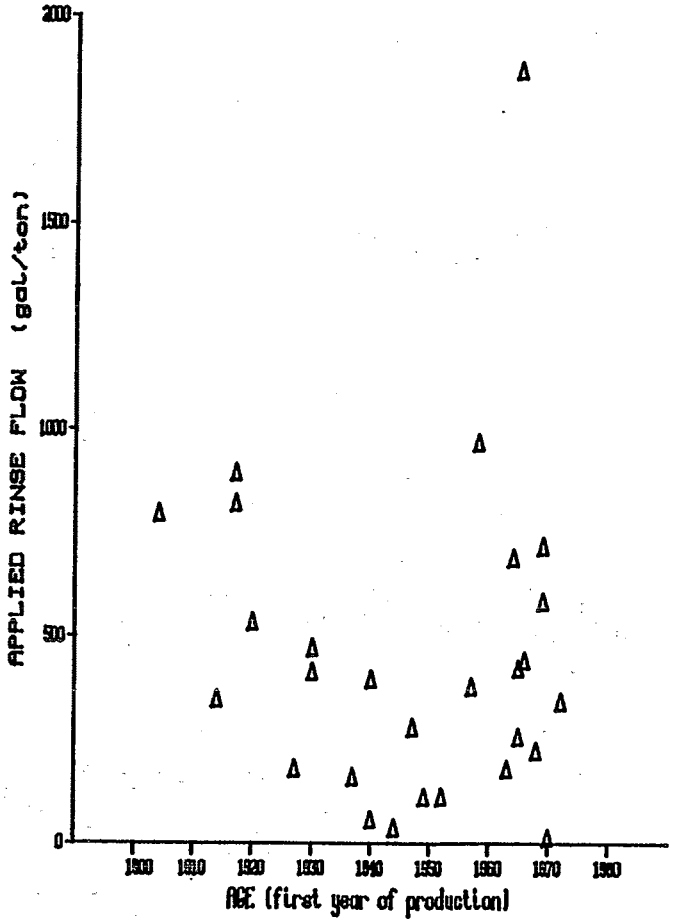

FIGURE IV-3
ACID PICKLING SUBCATEGORY
SULFURIC – BAR/BILLET/BLOOM

APPLIED RINSE FLOW VS PRODUCTION CAPACITY

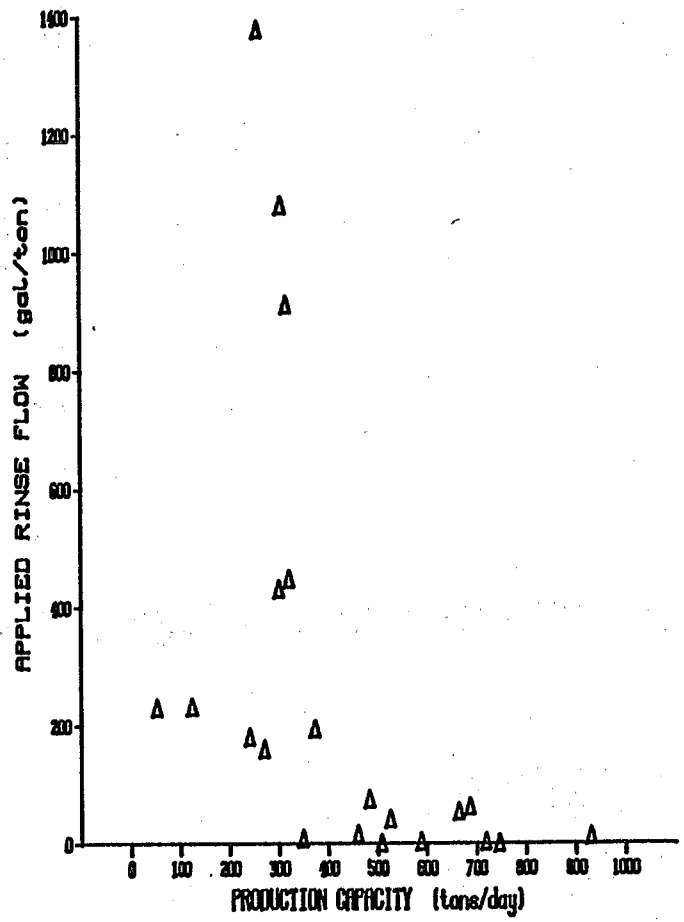

APPLIED RINSE FLOW VS AGE

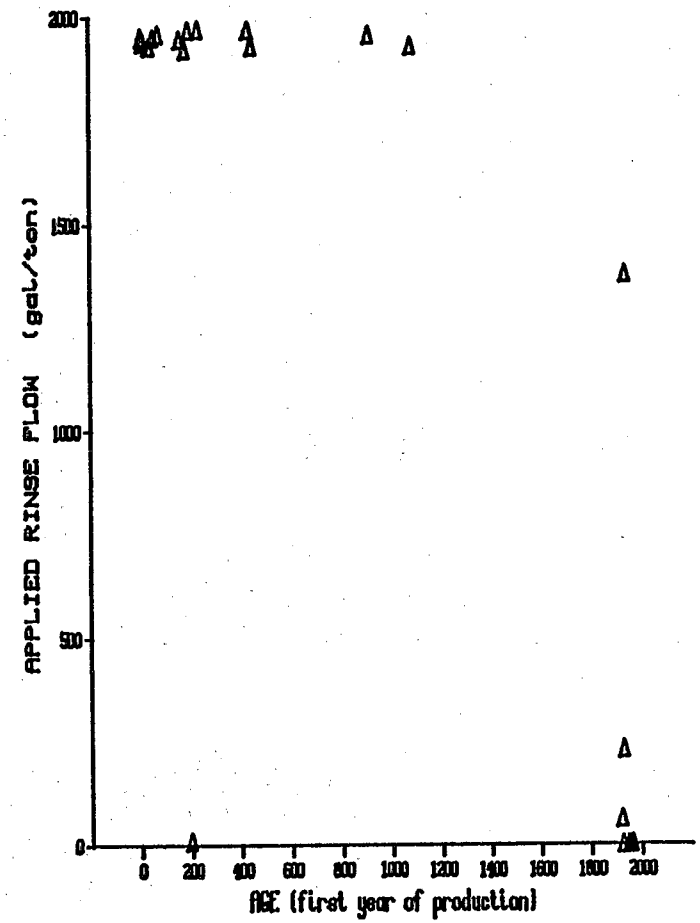

FIGURE IV–4
ACID PICKLING SUBCATEGORY
SULFURIC – PIPE/TUBE/OTHER

APPLIED RINSE FLOW VS PRODUCTION CAPACITY

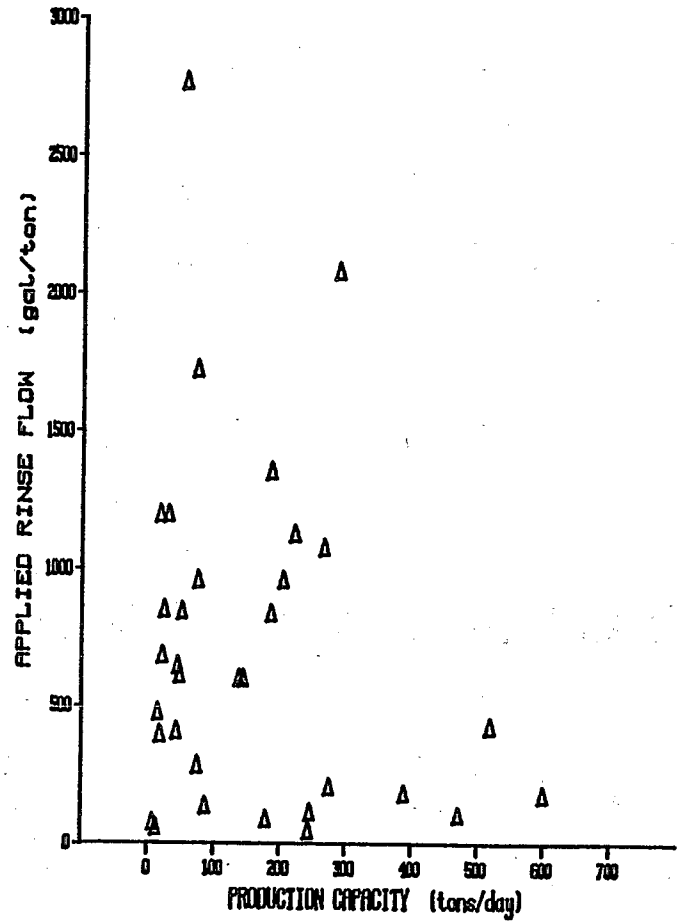

APPLIED RINSE FLOW VS AGE

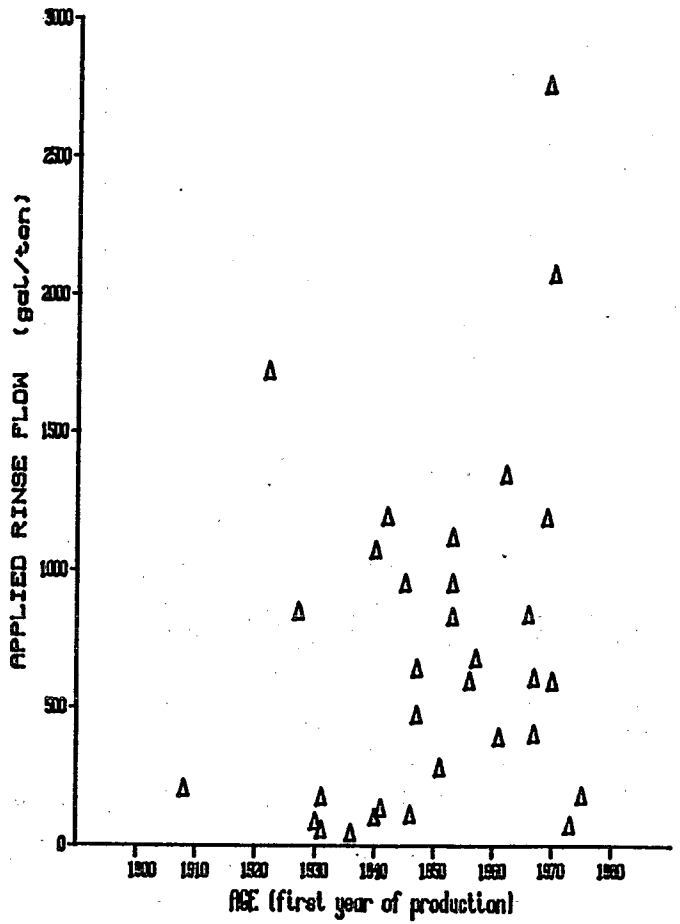

FIGURE IV–5
ACID PICKLING SUBCATEGORY
HYDROCHLORIC – STRIP/SHEET/PLATE

APPLIED RINSE FLOW VS PRODUCTION CAPACITY

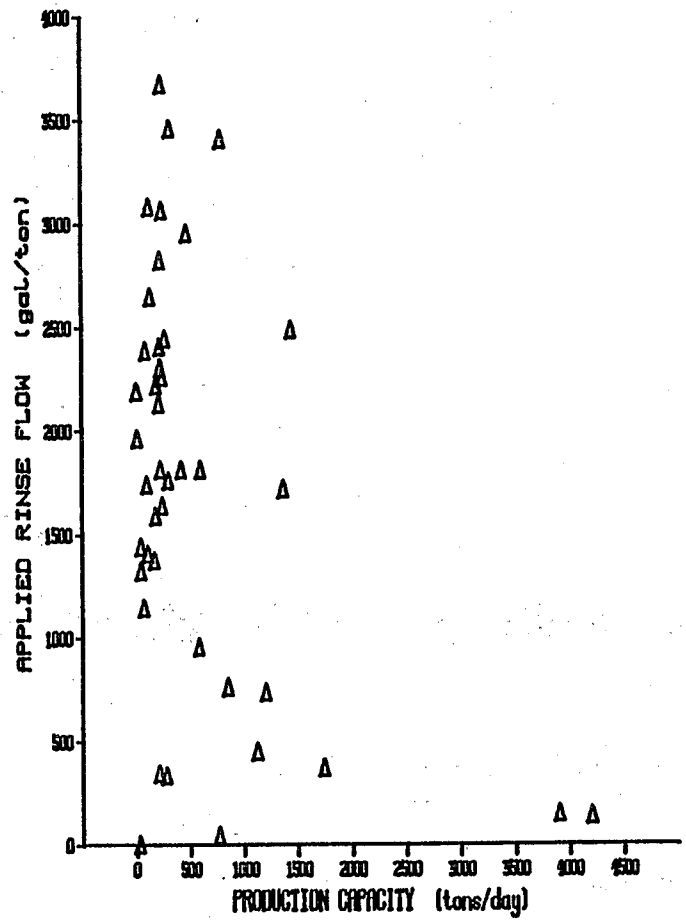

APPLIED RINSE FLOW VS AGE

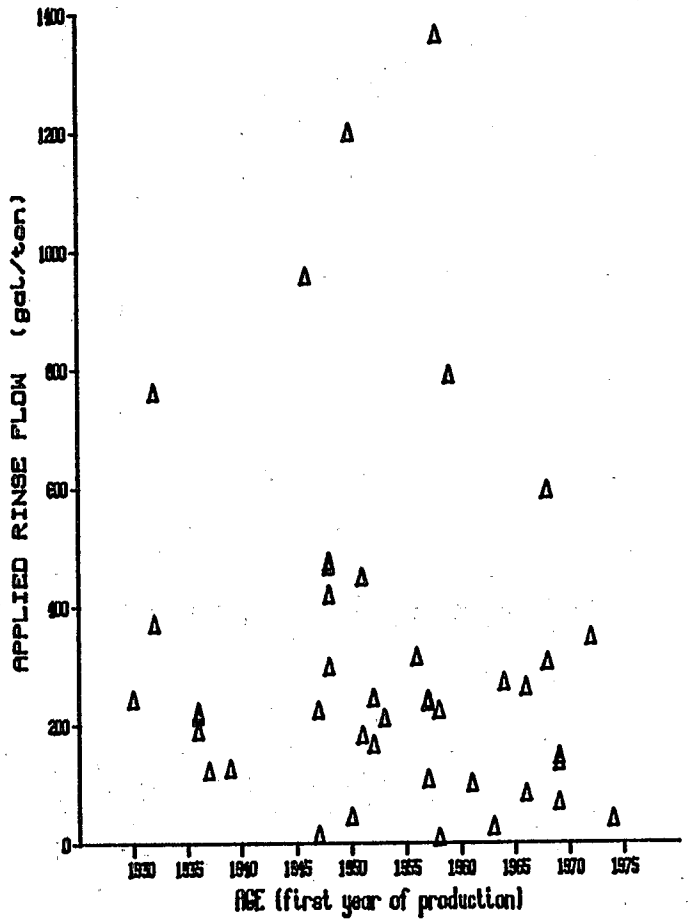

FIGURE IV–6
ACID PICKLING SUBCATEGORY
HYDROCHLORIC – ROD/WIRE/COIL

APPLIED RINSE FLOW VS PRODUCTION CAPACITY

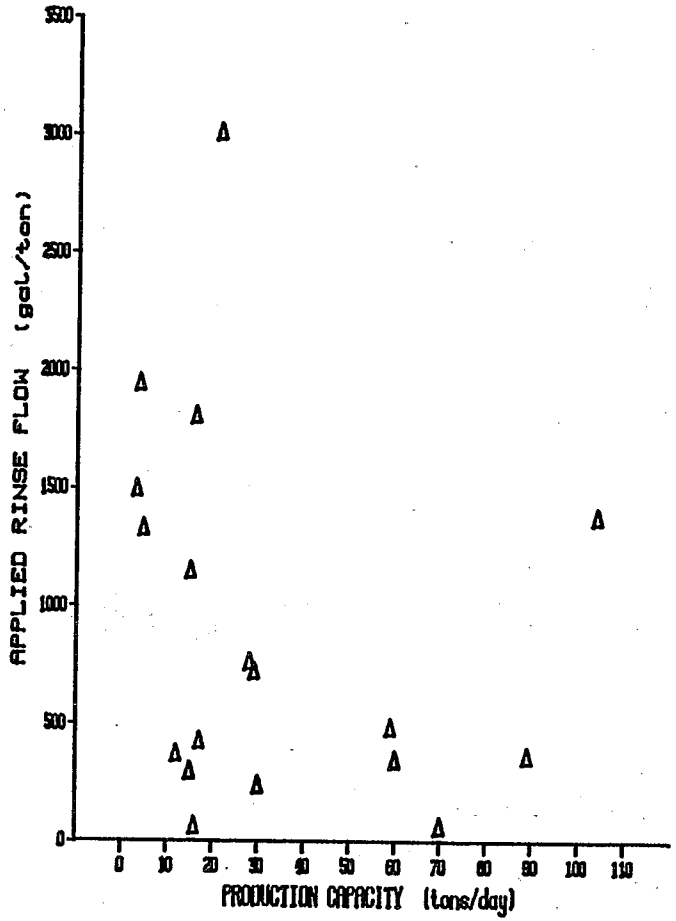

APPLIED RINSE FLOW VS AGE

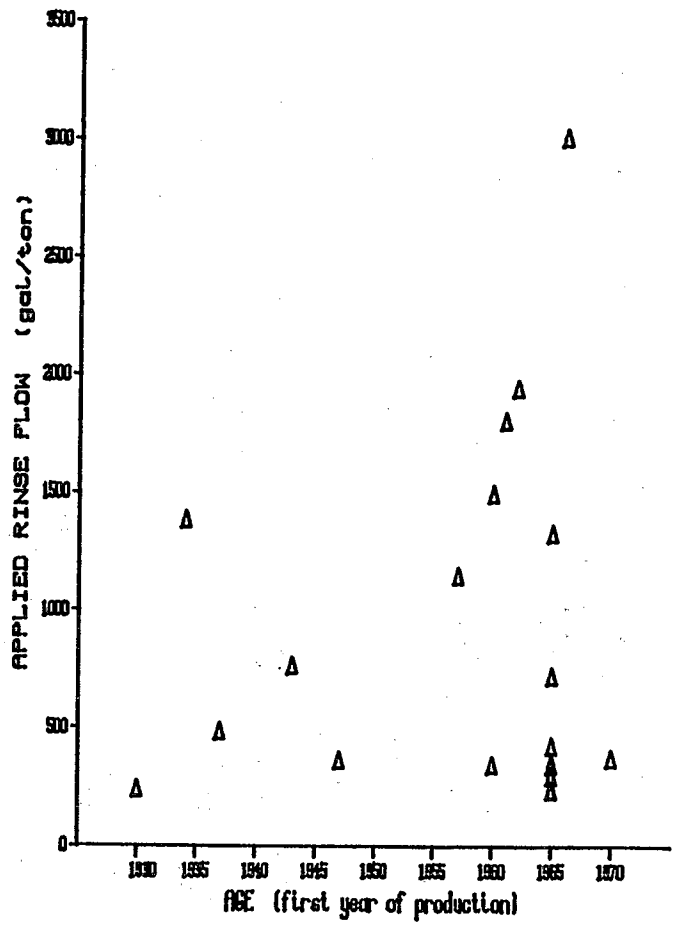

FIGURE IV–7
ACID PICKLING SUBCATEGORY
HYDROCHLORIC – PIPE/TUBE

APPLIED RINSE FLOW VS PRODUCTION CAPACITY

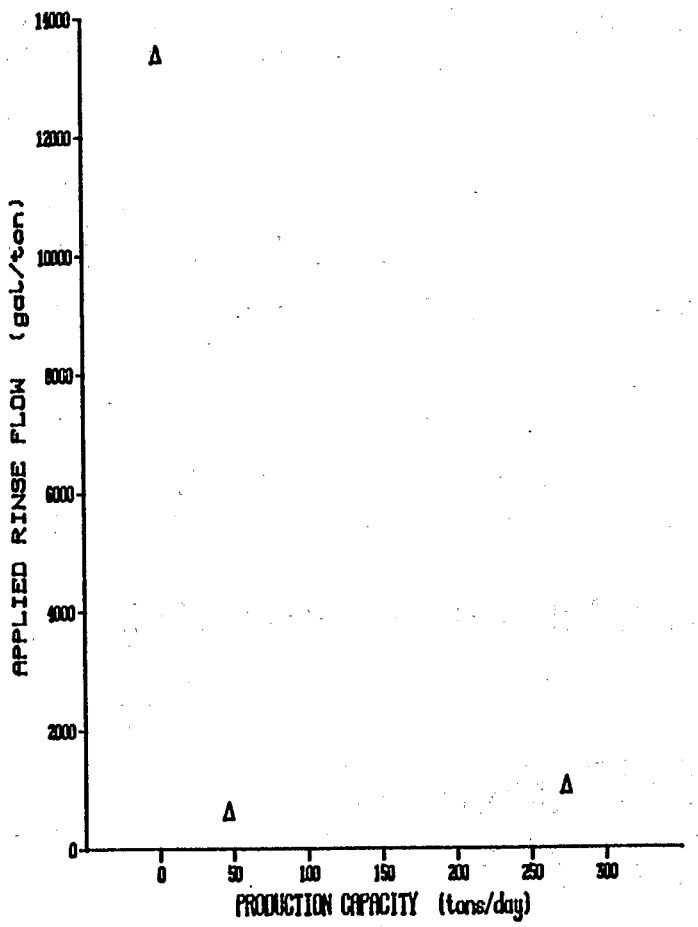

APPLIED RINSE FLOW VS AGE

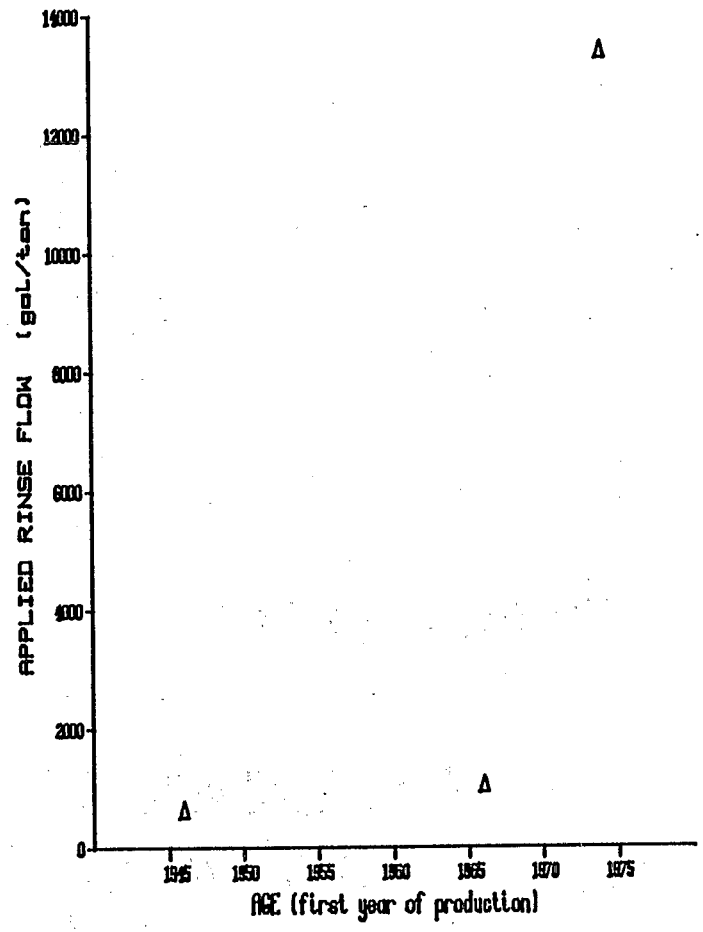

FIGURE IV–8
ACID PICKLING SUBCATEGORY
COMBINATION – BATCH STRIP/SHEET/PLATE

APPLIED RINSE FLOW VS PRODUCTION CAPACITY

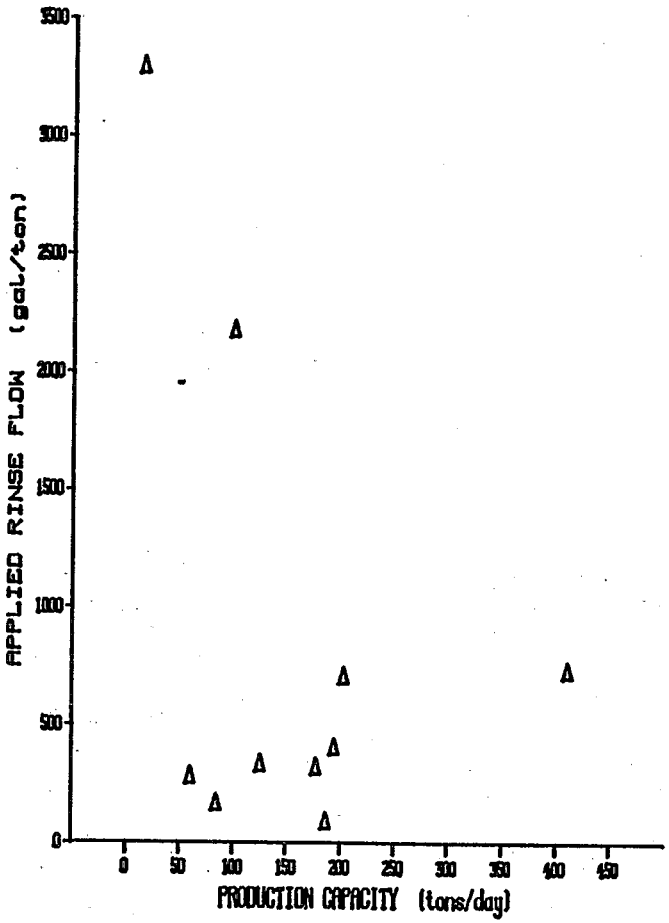

APPLIED RINSE FLOW VS AGE

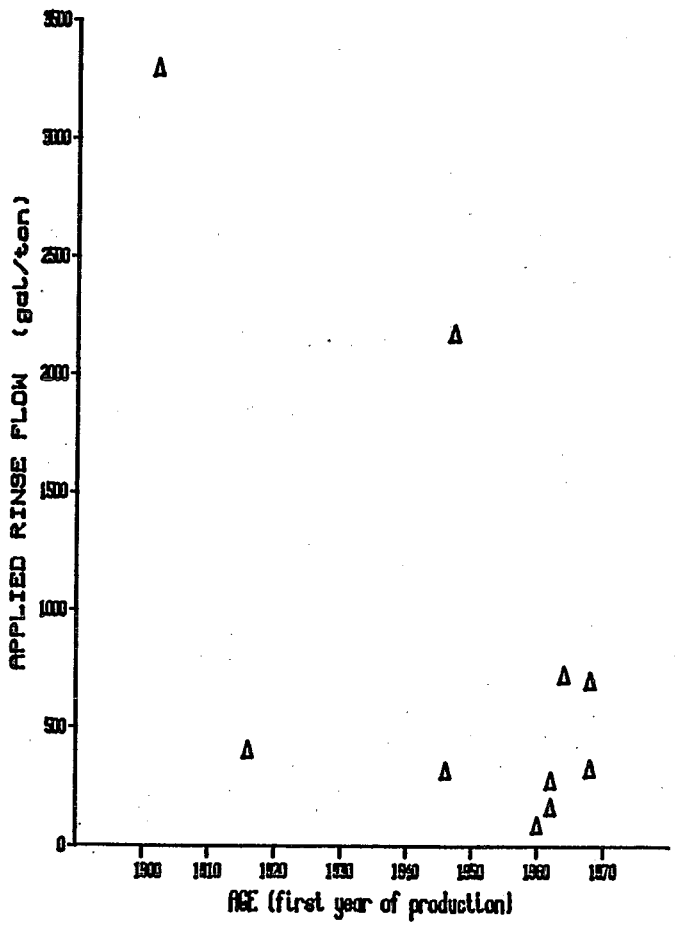

FIGURE IV–9
ACID PICKLING SUBCATEGORY
COMBINATION – CONTINUOUS STRIP/SHEET/PLATE

APPLIED RINSE FLOW VS PRODUCTION CAPACITY

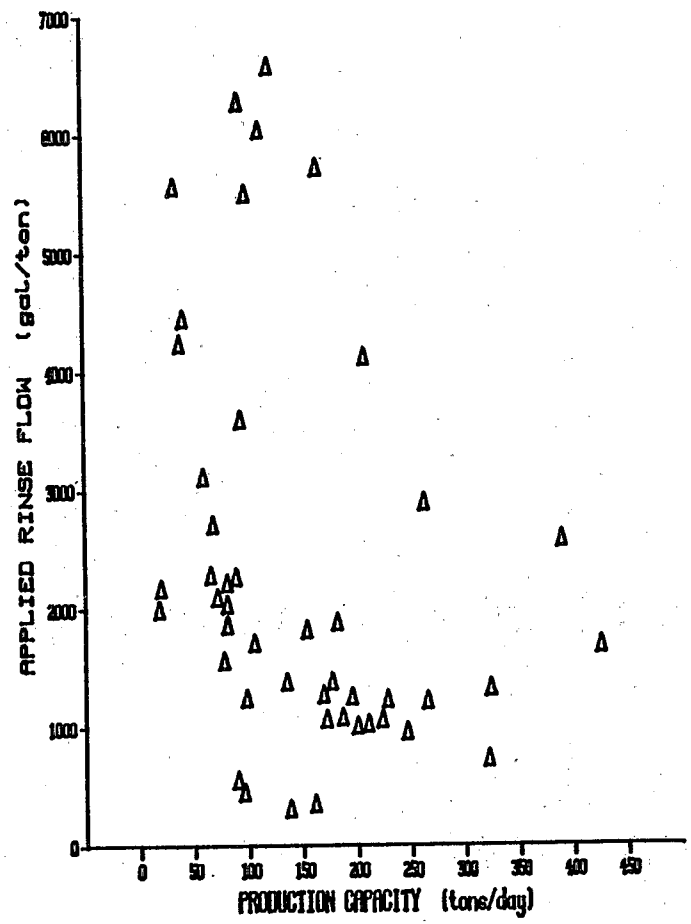

APPLIED RINSE FLOW VS AGE

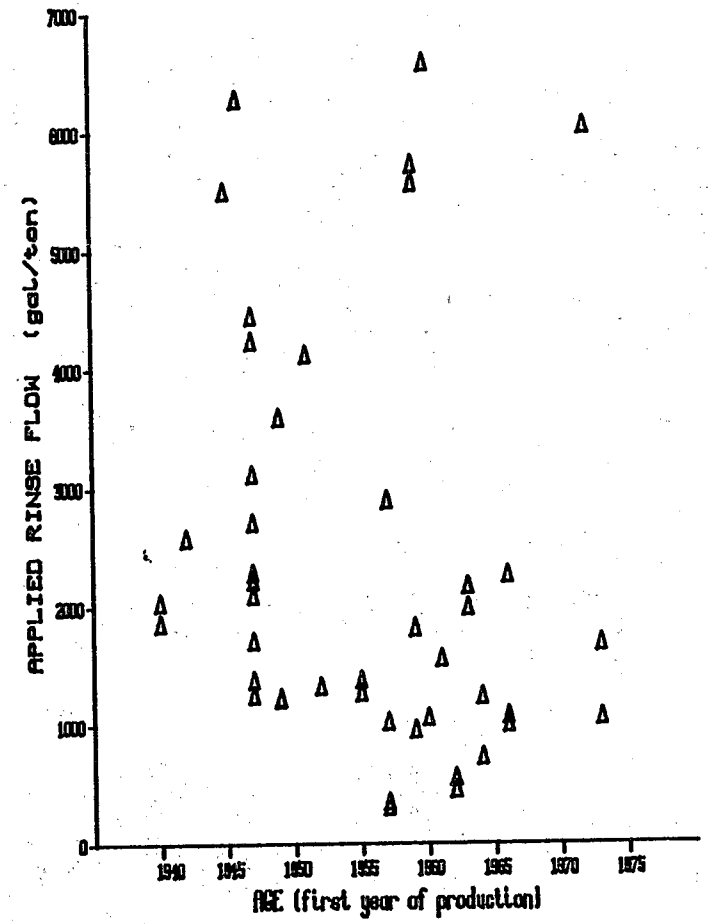

FIGURE IV–10
ACID PICKLING SUBCATEGORY
COMBINATION – ROD/WIRE/COIL

APPLIED RINSE FLOW VS PRODUCTION CAPACITY

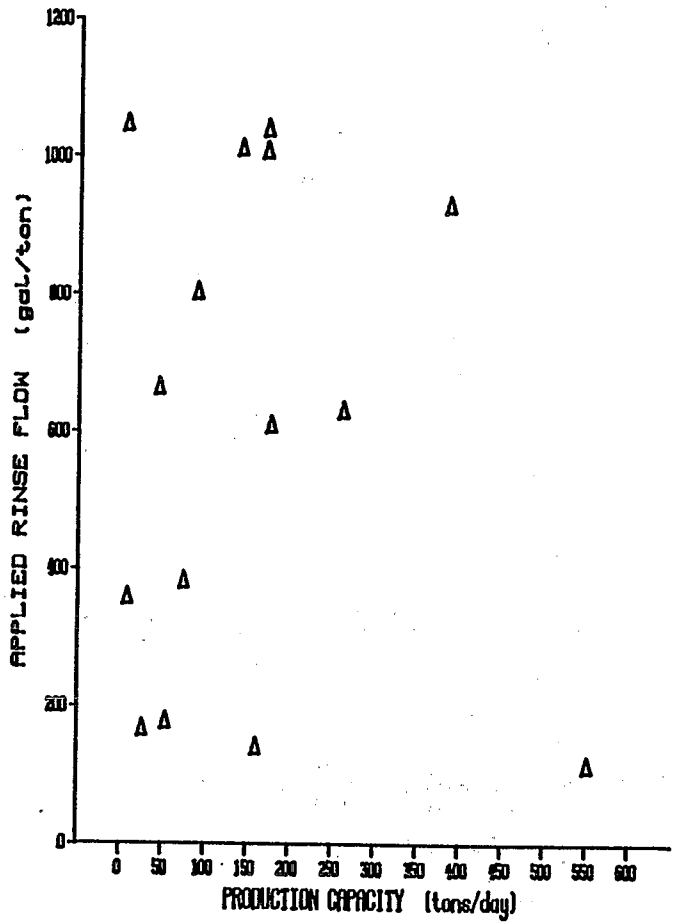

APPLIED RINSE FLOW VS AGE

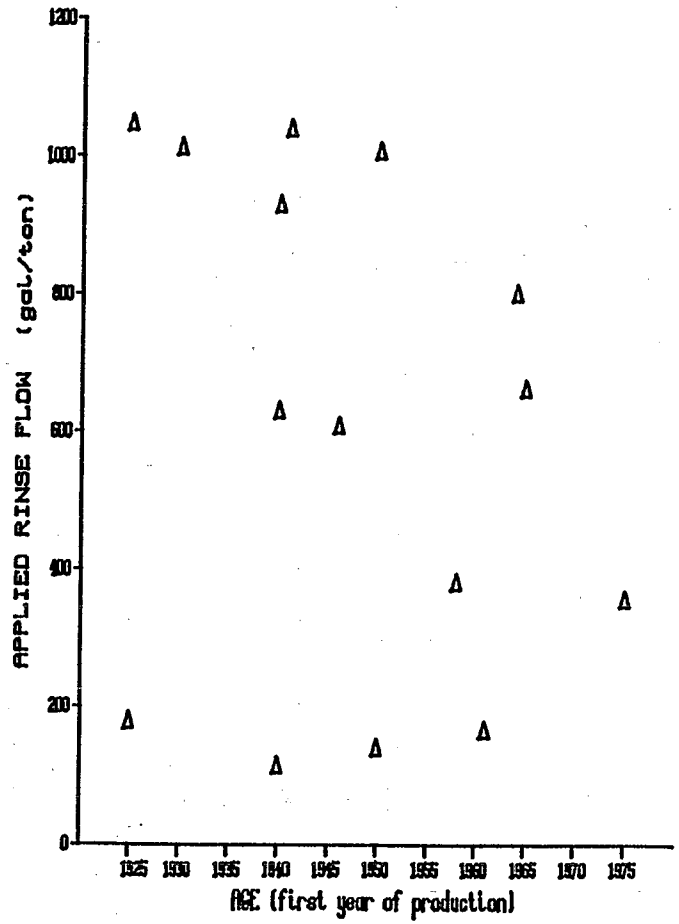

FIGURE IV–11
ACID PICKLING SUBCATEGORY
COMBINATION – BAR/BILLET/BLOOM

APPLIED RINSE FLOW VS PRODUCTION CAPACITY

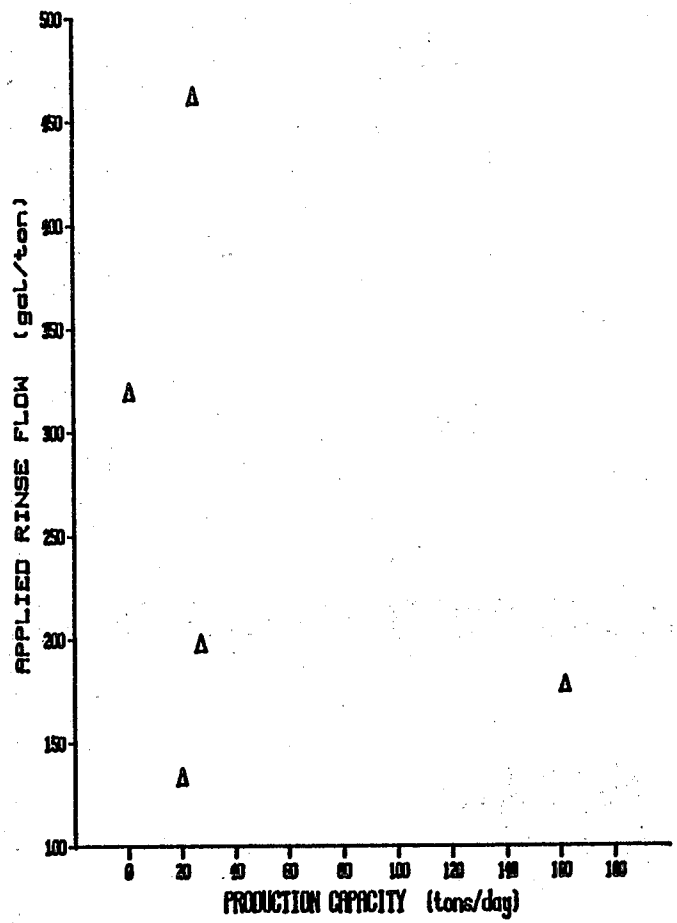

APPLIED RINSE FLOW VS AGE

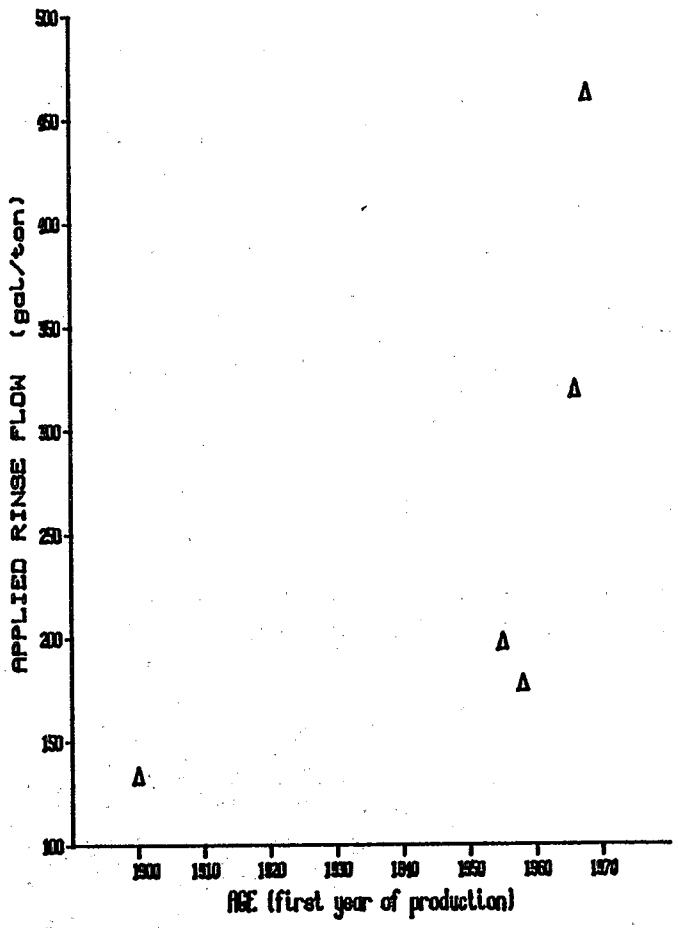

FIGURE IV–12
ACID PICKLING SUBCATEGORY
COMBINATION – PIPE/TUBE

APPLIED RINSE FLOW VS PRODUCTION CAPACITY

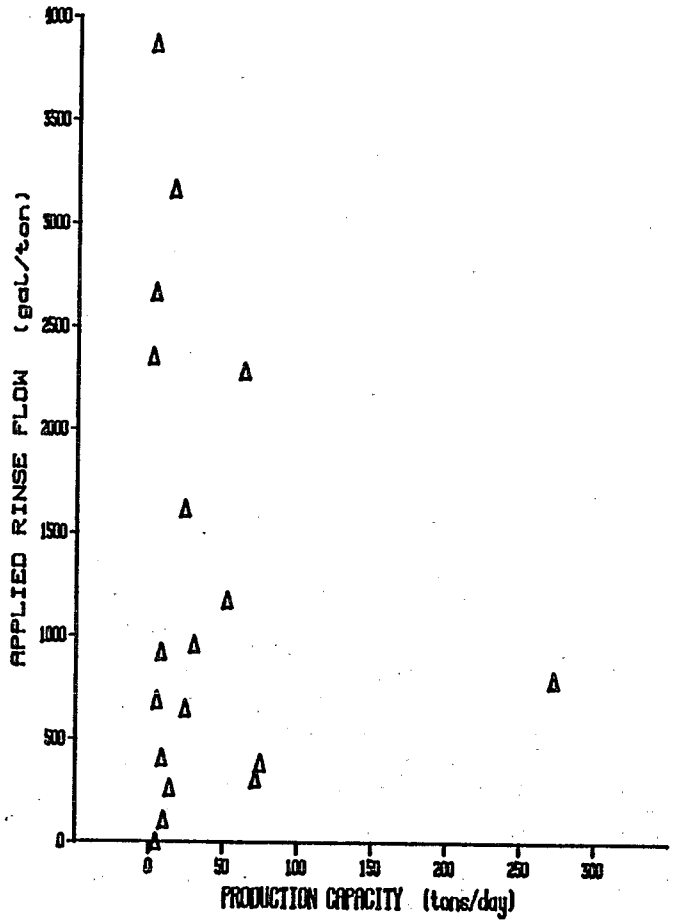

APPLIED RINSE FLOW VS AGE

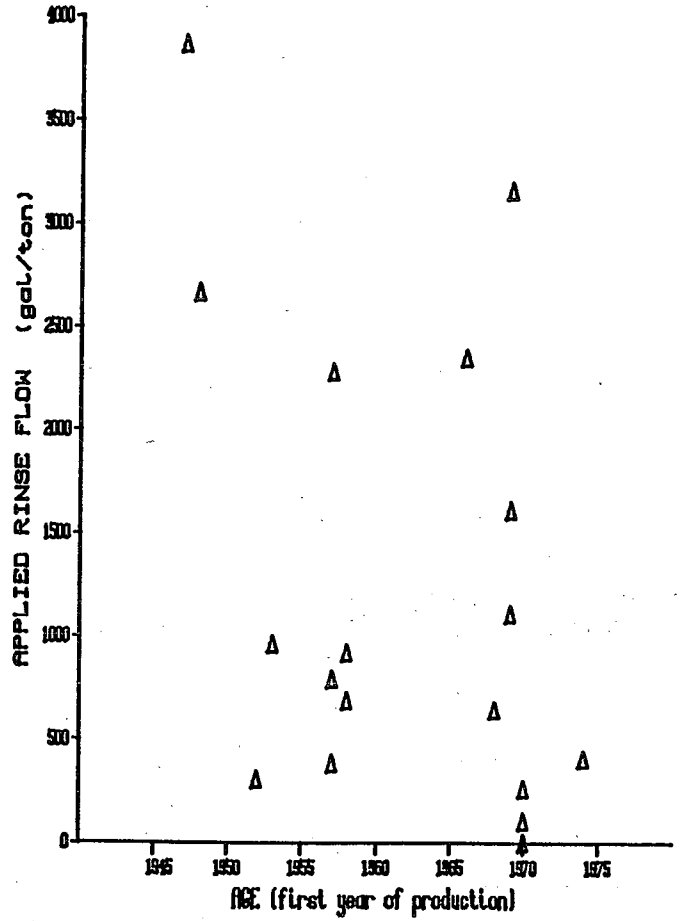

ACID PICKLING SUBCATEGORY

SECTION V

WATER USE AND WASTEWATER CHARACTERIZATION

Introduction

Process water usage within the steel industry is a major factor in determining pollutant loads and estimating the cost of wastewater treatment. The Agency used the data from the sampling inspections, responses to the DCPs and comments received on the proposed regulation (46 FR 1858) to evaluate process water usage within this subcategory, and to obtain total wastewater volumes. The Agency identified, for each line, existing control and treatment technology and the method of wastewater disposal.

This section characterizes the wastewaters from acid pickling operations and reviews the actual operation of the pickling process. The wastewater characterization is based upon data obtained from two sampling programs. During the first sampling program, the Agency investigated the levels of the previously limited pollutants. During the second program, monitoring was also conducted for toxic pollutants. When an operation was visited twice, only the more recent data were used to characterize wastewaters from that operation.

Only process wastewaters were considered by the Agency. Noncontact cooling and nonprocess waters are not limited by this regulation. Process wastewater is that water which comes into contact with the process, product, by-product, or raw materials, thus becoming contaminated with the various pollutants which are characteristic of the process. Noncontact cooling water is defined as that water which does not directly contact processes, products, raw materials, or by-products. Nonprocess cooling water is defined as that water which is used for nonprocess operations, i.e., utilities and maintenance.

Acid Pickling

As shown in Section III, acid pickling is performed in both batch and continuous operations. Wastewaters are discharged from three major sources in the acid pickling process: spent pickle liquor from the tanks in which pickling is performed, rinsewaters from the product rinsing step(s) immediately following pickling, and from the fume scrubber systems if wet scrubbers are used. A fourth source is the absorber vent scrubber which is uniquely associated with hydrochloric acid regeneration systems. Contaminated wastewaters may also be discharged from wet looping pits associated with some pickling lines. However, the Agency found that wastewater volumes from these sources are usually intermittent or small in volume in relation to other pickling operation wastewaters and that no separate allowance for wet

looping pits is warranted. Each of these sources is described separately below.

A. Pickle Rinsewater

The largest wastewater source is the rinsing operation following the pickling step. Depending on the product being pickled and rinsed, varying amounts of water are used and discharged. However, regardless of the product type, the rinsewaters generally constitute higher flows than the other sources and contribute much of the process pollutant load.

There can be one or more rinse steps depending upon the pickling operation. A considerable number of lines include a single tank in which the product is rinsed after pickling. However, many lines include multi-step rinsing, which consists of dip tanks, spray chambers, or other rinsing components. The exact arrangement of the rinses depends upon the degree of rinsing required.

Rinsewater discharge flows can be minimized with cascade, countercurrent or high pressure/high temperature spray rinse systems. In cascade rinse systems, the rinsewater is cascaded through a series of tanks. The fresh water makeup enters the final tank and then discharges from the first rinse tank. The product to be pickled travels in the opposite direction to the water flow and thus is rinsed with successively cleaner water. These systems reduce rinse water flow by about 90%, concentrate the pollutants in the last rinsing chamber, and achieve more thorough rinsing. Although cascade rinsing is ideally suited to continuous operations, it is also used for some batch operations. The high pressure/high temperature rinse system is used in continuous pickling operations. Steam is brought into contact with the rinsewater. The heated rinsewater is accelerated through a venturi-type nozzle and subsequently sprayed onto the product through a series of sprays located on both sides of the product. This system requires a minimal amount of floor space and is readily adaptable to existing pickling lines. The limited information available to the Agency indicates that the efficiency of rinsing is considerably improved, and the volume of rinsewater required is substantially reduced.

The rinsewater flow and the wastewater concentrations can vary considerably depending upon such factors as the number of rinsing steps used and the type of rinsing (i.e., flow-through versus standing; cascade versus conventional), and other factors. The Agency considered these variations in developing these limitations.

Flow data and net concentrations for pollutants found in the rinsewater at pickling lines surveyed for this study are summarized in Tables V-4, V-5 and V-6. Net concentrations are presented to determine the pollutants contributed by acid

pickling operations. Averages are also listed to show a typical level of pollutants found in discharges from pickling operations.

B. Spent Pickle Liquor

The most concentrated source of wastewater in acid pickling operations is spent pickle liquor, which is an acid solution the strength of which has been depleted through continued pickling. The same pickling solution is generally used for several days or weeks to process large tonnages of steel products. The contents of the bath are replaced when the acid loses its strength to the point where extended pickling times are required or product quality diminishes. Regardless of the type of acid used, spent pickle liquors are highly contaminated with toxic metal pollutants.

The quality of spent pickle liquor can vary greatly, depending on the age of the solution. The wastewater characteristics for the sampled sources are summarized in Tables V-1 through V-3. Where no flow data are presented in these tables, there was no discharge occurring from the tanks when the sampling was conducted. Because spent pickle liquor is highly contaminated and low in volume, contract hauling off-site is a common disposal method. Lines that do not have contract hauling, gradually bleed the liquor into treatment systems for disposal, or recover or regenerate the spent acid for reuse.

C. Fume Scrubber Water

The third potential source of wastewater in the acid pickling process is the wet fume scrubber. Wet systems are used to collect and scrub fumes emitted from the pickling tanks. Other types of fume treatments that do not require water are in use at several acid pickling operations. An example of this type of system is the acid demister used at one of the sampled sulfuric acid pickling operations.

Considerable quantities of pollutants are discharged from the fume scrubbing system. The acid and other contaminants contained in the fumes are transferred to the scrubber water. The concentrations of pollutants discharged from the scrubbers vary considerably and depend upon such factors as the amount of fumes generated in the process, the water usage in the scrubber, and the degree of recycle. The level of pollutants found at the six fume scrubber systems sampled are summarized in Table V-7.

As discussed in later sections, the applied flow to the scrubber system can vary considerably. These flow rates can be reduced by recycling the scrubber water. Many lines with fume scrubber recycle systems discharge less than 10% of the scrubber flow.

D. Absorber Vent Scrubber Water

The regeneration of spent hydrochloric acid pickling solutions results in another wastewater source. Wet absorber vent scrubbers are used to collect and scrub fumes generated by the acid regeneration process. The concentrations of pollutants discharged from the scrubbers vary and depend upon the amount of fumes generated in the process, the water usage in the scrubber, and the degree of recycle. Table V-8 summarizes analytical data from absorber vent scrubbers. The applied flow to the scrubber systems may vary. However, these flow rates can be reduced through recycle. These blowdowns may be reused along with the regenerated acid at the pickling line.

TABLE V-1

SUMMARY OF ANALYTICAL DATA FROM SAMPLED PLANTS
SULFURIC ACID PICKLING
GROSS RAW SPENT CONCENTRATES - CONCENTRATIONS (MG/L)

Plant Code	091	092	097	H-2	P-2	Q-2	R-2	T-2	QQ-2	SS-2	TT-2	WW-2	
Reference No.	0612	0088A	0760	0432A	0312	0894	0240B	0792B	0584E	0112A	0856D	0868A	Average
Sample Points	R	C	E	2	3	1	6	-	2	1	4	2	
Flow (gal/ton)	3.5	14.6	7.2	14.7	17.6	24.3	10.5	14.6	23.6	10.9	23	44.7	17.4
		B & W Beaver F											
Parameters													
Dissolved Iron	63,000	38,500	46,000	47,900	46,800	61,900	67,800	34,000	48,300	48,000	70,800	19,000	49,300
Oil and Grease	11	17	46	NA	99	14	NA	18	8.5	9.5	18.5	10	25
Suspended Solids	2,520	306	319	18,000	234	1,420	70	65	128	200	222	91	2,140
pH, Units	<1.0	<1.0	<1.0	<1.0	1.4	<1.0	2.0	<1.0	<1.0	<1.0	<1.0	<1.0	<1.0-2.0
23 Chloroform	0.02	0.041	0.01	NA	NA	NA	NA	NA	NA	NA	NA	NA	0.024
44 Methylene chloride	0.014	0.052	0.06	NA	NA	NA	NA	NA	NA	NA	NA	NA	0.024
66 bis-(2-ethylhexyl)phthalate	0.79	0.052	0.08	NA	NA	NA	NA	NA	NA	NA	NA	NA	0.31
68 Di-n-butyl phthalate	ND	0.052	*	NA	NA	NA	NA	NA	NA	NA	NA	NA	0.017
71 Dimethyl phthalate	ND	0.15	ND	NA	NA	NA	NA	NA	NA	NA	NA	NA	0.05
115 Arsenic	NA	0.17	0.18	NA	NA	NA	NA	NA	NA	NA	NA	NA	0.18
118 Cadmium	0.26	0.28	0.46	NA	NA	NA	NA	NA	NA	NA	NA	NA	0.33
119 Chromium	269	205	30	NA	NA	NA	NA	NA	NA	NA	NA	NA	168
120 Copper	2.6	4.7	3	NA	NA	NA	NA	NA	NA	NA	NA	NA	3.43
122 Lead	1.6	*	1.6	NA	NA	NA	NA	NA	NA	NA	NA	NA	1.07
124 Nickel	23	27	21	NA	NA	NA	NA	NA	NA	NA	NA	NA	23.7
126 Silver	0.60	0.43	0.29	NA	NA	NA	NA	NA	NA	NA	NA	NA	0.44
128 Zinc	16	133	2.8	NA	NA	NA	NA	NA	NA	NA	NA	NA	50
	Northwestern St. & Wire		Standard Steel Div										

ND: Not detected (included in average)
NA: Not analyzed
- : Net calculation yielded negative result (included in average)
* : Net calculation yielded concentration less than 0.010 mg/l (included in average)

TABLE V-2

SUMMARY OF ANALYTICAL DATA FROM SAMPLED PLANTS
HYDROCHLORIC ACID PICKLING
GROSS RAW SPENT CONCENTRATES - CONCENTRATIONS (MG/L)

Plant Code	091	095	099	100	AA-2	I-2	U-2	V-2	W-2	Z-2	
Reference No.	0612	0584F	0528B	0384A	0384A	0856P	0480A	0936	-	0396D	Average
Sample Points	L	B	B	K	3-1	8-6	3	7+8	1-3	3-4	
Flow (gal/ton)	18.1	49.7	81.7	4.6	3.3	220	6.45	3.86	11.9	41.4	44
Parameters											
Dissolved Iron	56,000	800	75,500	118,000	116,000	7.1	77,000	107,000	137,700	44,300	73,230
Oil and Grease	4	2.3	11	5.0	0	NA	NA	NA	5.1	*	3.9
Suspended Solids	3,026	74	42	316	40	54	40	140	97	120	395
pH, Units	<1.0	1.3-3.0	<1.0	<1.0	<1.0	4.5-5.0	<1.0	<1.0	<1.0	<1.0	<1.0-5.0
23 Chloroform	*	0.10	*	0.011	NA	NA	NA	NA	NA	NA	0.028
44 Methylene chloride	*	3.5	*	0.049	NA	NA	NA	NA	NA	NA	0.89
65 Phenol	ND	0.010	*	*	NA	NA	NA	NA	NA	NA	*
66 bis-(2-ethylhexyl)phthalate	*	0.010	1.55	0.16	NA	NA	NA	NA	NA	NA	0.43
67 Butyl benzyl phthalate	ND	ND	*	0.045	NA	NA	NA	NA	NA	NA	0.011
68 Di-n-butyl phthalate	*	*	0.032	*	NA	NA	NA	NA	NA	NA	*
85 Tetrachloroethylene	ND	0.028	ND	ND	NA	NA	NA	NA	NA	NA	*
87 Trichloroethylene	0.022	ND	ND	ND	NA	NA	NA	NA	NA	NA	*
114 Antimony	NA	0.18	NA	4.2	NA	NA	NA	NA	NA	NA	2.19
115 Arsenic	NA	0.022	0.40	NA	NA	NA	NA	NA	NA	NA	0.21
118 Cadmium	0.28	*	0.31	0.28	NA	NA	NA	NA	NA	NA	0.22
119 Chromium	37	1.00	18	8.5	NA	NA	NA	NA	NA	NA	16.1
120 Copper	22	2.42	28	11	NA	NA	NA	NA	NA	NA	15.9
122 Lead	1,550	*	*	2.1	NA	NA	NA	NA	NA	NA	388
124 Nickel	22	1.66	13	13	NA	NA	NA	NA	NA	NA	12.4
128 Zinc	60	1.66	4.2	4.5	NA	NA	NA	NA	NA	NA	17.6
	NW ST&W	Weirton	McLouth	Inland							

ND: Not detected (included in average)
NA: Not analyzed
- : Net calculation yielded negative result (included in average)
* : Net calculation yielded concentration less than 0.010 mg/l (included in average)

TABLE V-3

SUMMARY OF ANALYTICAL DATA FROM SAMPLED PLANTS
COMBINATION ACID PICKLING
GROSS RAW SPENT CONCENTRATES - CONCENTRATIONS (MG/L)

Plant Code	A	C(1)	C(2)	D	D	E	F	I
Reference No.	0900	0424	0424	0248B	0248B	0020B	0856H	0432K
Sample Points	12	11	12	14	13	14	11	12
Flow (gal/ton)	NA	NA	NA	NA	NA	NA	NA	4.2
Parameters								
Dissolved Iron	989	13,200	13,200	74,700	36,900	15,700	34,300	20.6
Oil and Grease	2.6	0.2	0.2	2.2	2.0	0.4	NA	7.1
Suspended Solids	196	224	44	318	196	114	100	109
Fluoride	15,000	1,700	7	2.5	6.4	18	7,000	26,000
pH, Units	<1.0	1.2	<1.0	2.2	2.1	<1.0	2.2	1.1
114 Antimony	NA	NA	NA	NA	NA	NA	NA	NA
118 Cadmium	0.050	0.090	0.12	0.080	0.070	0.060	0.22	0.10
119 Chromium	2,400	2,090	1,360	6,242	3,481	2,426	6,800	4,284
120 Copper	36	114	6.79	80	28	78	54	37
122 Lead	1.30	*	*	1.4	1.4	5.7	2.64	NA
124 Nickel	2,300	2,832	1,786	4,680	1,952	2,123	4,200	2,031
128 Zinc	1.40	0.97	2.15	6.4	4.0	1.6	85	1.1

TABLE V-3
SUMMARY OF ANALYTICAL DATA FROM SAMPLED PLANTS
COMBINATION ACID PICKLING
GROSS RAW SPENT CONCENTRATES - CONCENTRATIONS (MG/L)
PAGE 2

Plant Code	L	M	O	O	S	T	U	
Reference No.	0440A	0432J	0176	0176	0060I		0748	Average
Sample Points	5	15	23	26	7	9	2	
Flow (gal/ton)	NA	NA	NA	NA	NA	NA	NA	NA
Parameters								
Dissolved Iron	1.2	NA	16,200	6,960	8,240	34,500	30,400	20,380
Oil and Grease	NA	NA	NA	NA	NA	NA	NA	2.1
Suspended Solids	123	60	NA	NA	236	NA	16	145
Fluoride	232	17,000	NA	NA	380	NA	NA	6,120
pH, Units	<1.0	1.2	2.0	<1.0	<1.0	<1.0	2.3	<1.0-2.3
114 Antimony	NA	NA	NA	NA	NA	NA	NA	NA
118 Cadmium	NA	0.32	0.050	0.020	0.17	0.30	0.35	0.14
119 Chromium	*	6,720	2,361	1,248	1,424	5,040	7,000	3,525
120 Copper	NA	640	416	16	52	632	144	167
122 Lead	NA	*	1.2	0.60	1.28	7.1	1.2	2.0
124 Nickel	NA	5,980	4,914	3,822	1,552	17,200	9,040	4,600
128 Zinc	NA	7.2	0.72	0.76	1.6	32	5.8	10.8

ND : Not detected (included in average)
NA : Not analyzed
- : Net calculation yielded negative result (included in average)
* : Net calculation yielded concentration less than 0.010 mg/l (included in average)
(1): Nitric and hydrofluoric acids used in combination
(2): Sulfuric acid used

TABLE V-4

SUMMARY OF ANALYTICAL DATA FROM SAMPLED PLANTS
SULFURIC ACID PICKLING
NET RAW RINSE WASTEWATERS - CONCENTRATIONS (MG/L)

Plant Code	090	091	094(A)	094(B)	096	097	098	H-2	I-2(C)	I-2(D)
Reference No.	0476A	0612	0948C	0948C	0112I	0760	0684D	0432A	0856P	0856P
Sample Points	C-(A+B)	F-A	C-A	D-A	D-A	(B+C)-A	B-A	(3+4)-1	7-6	3-6
Flow (gal/ton)	91	122	303	422	604	11.6	12.2	115	207	465
Parameters										
Dissolved Iron	391	2,350	40	98	97	4,860	3,100	28.7	350	36
Oil and Grease	22	16	3	7	12.5	3	*	6.2	-	8.4
Suspended Solids	1	-	34	33	126	330	19	-	70	21
pH, Units	1.7-2.5	1.8	3.2-5.7	2.2-2.3	3.2-3.7	NA	1.8	1.9-6.4	2.4-2.6	2.9-6.4
22 p-chloro-m-cresol	ND	0.020	ND	ND	ND	ND	ND	NA	NA	NA
44 Methylene chloride	*	*	0.15	-	*	-	*	NA	NA	NA
57 2-nitrophenol	0.022	ND	ND	ND	*	ND	ND	NA	NA	NA
60 4,6-dinitro-o-cresol	ND	0.10	ND	ND	ND	ND	ND	NA	NA	NA
66 bis-(2-ethylhexyl)phthalate	0.084	0.035	*	*	0.047	*	0.13	NA	NA	NA
67 Butyl benzyl phthalate	*	ND	*	*	0.010	*	*	NA	NA	NA
68 Di-n-butyl phthalate	0.010	0.010	*	*	0.020	*	*	NA	NA	NA
70 Diethyl phthalate	0.060	*	ND	0.029	*	*	*	NA	NA	NA
71 Dimethyl phthalate	0.080	ND	ND	*	*	0.011	*	NA	NA	NA
115 Arsenic	NA	NA	0.01	*	NA	1.04	0.34	NA	NA	NA
118 Cadmium	ND	0.02	0.01	*	*	0.042	0.14	NA	NA	NA
119 Chromium	0.37	3.8	*	0.05	0.10	2.87	3.6	NA	NA	NA
120 Copper	0.34	0.62	*	0.14	0.12	10.1	3.7	NA	NA	NA
122 Lead	*	0.16	*	*	0.19	0.24	1.82	NA	NA	NA
124 Nickel	0.43	0.80	-	0.05	0.09	4.62	6.6	NA	NA	NA
126 Silver	*	0.03	*	*	*	0.05	0.03	NA	NA	NA
128 Zinc	59	26	*	0.04	15	0.20	-	NA	NA	NA

TABLE V-4
SUMMARY OF ANALYTICAL DATA FROM SAMPLED PLANTS
SULFURIC ACID PICKLING
NET RAW RINSE WASTEWATERS - CONCENTRATIONS (MG/L)
PAGE 2

Plant Code	O-2	P-2	Q-2	QQ-2	R	S-2	SS-2	T-2	TT-2	WW-2	
Reference No.	0590	0312	0894	0584E	0240A	0256G	0112A	0792B	0856D	0868A	Average
Sample Points	1-2	1	3-4	5-1	11-1	3-4	2-10	1-2	1-2-3	1-3	
Flow (gal/ton)	18.0	16.9	8.0	167	30	198	202	21.6	134	284	165
Parameters											
Dissolved Iron	43,000	6,500	3,500	64.7	8,990	596	63	1,833	81.9	357	3,820
Oil and Grease	298	1	-	-	1.3	21	2	-	2.4	1.6	20.3
Suspended Solids	18	749	20	34.5	162	159	76	49	7.0	6.1	96
pH, Units	<1.0	1.3-1.6	1.9	2.7	1.6	2.2	2	1.6	1.8	1.7	<1.0-6.4
22 p-chloro-m-cresol	NA	NA	NA	NA	NA	NA	NA	NA	NA	NA	*
44 Methylene chloride	NA	NA	NA	NA	NA	NA	NA	NA	NA	NA	0.021
57 2-nitrophenol	NA	NA	NA	NA	NA	NA	NA	NA	NA	NA	*
60 4,6-dinitro-o-cresol	NA	NA	NA	NA	NA	NA	NA	NA	NA	NA	0.014
66 bis-(2-ethylhexyl)phthalate	NA	NA	NA	NA	NA	NA	NA	NA	NA	NA	0.042
67 Butyl benzyl phthalate	NA	NA	NA	NA	NA	NA	NA	NA	NA	NA	*
68 Di-n-butyl phthalate	NA	NA	NA	NA	NA	NA	NA	NA	NA	NA	*
70 Diethyl phthalate	NA	NA	NA	NA	NA	NA	NA	NA	NA	NA	0.013
71 Dimethyl phthalate	NA	NA	NA	NA	NA	NA	NA	NA	NA	NA	0.013
115 Arsenic	NA	NA	NA	NA	NA	NA	NA	NA	NA	NA	0.35
118 Cadmium	NA	NA	NA	NA	0.01	NA	NA	NA	NA	NA	0.028
119 Chromium	NA	NA	NA	NA	39	NA	NA	NA	NA	NA	6.22
120 Copper	NA	NA	NA	NA	4.3	NA	NA	NA	NA	NA	2.42
122 Lead	NA	NA	NA	NA	1.05	NA	NA	NA	NA	NA	0.43
124 Nickel	NA	NA	NA	NA	6.2	NA	NA	NA	NA	NA	2.35
126 Silver	NA	NA	NA	NA	NA	NA	NA	NA	NA	NA	0.016
128 Zinc	NA	NA	NA	NA	0.96	NA	NA	NA	NA	NA	12.7

ND : Not detected (included in average)
NA : Not analyzed
- : Net calculation yielded negative result (included in average)
* : Net calculation yielded concentration less than 0.010 mg/l (included in average)
(A): Sheet pickler
(B): Strip pickler
(C): #4 pickler
(D): #5 pickler

TABLE V-5

SUMMARY OF ANALYTICAL DATA FROM SAMPLED PLANTS
HYDROCHLORIC ACID PICKLING
NET RAW RINSE WASTEWATERS - CONCENTRATIONS (MG/L)

Plant Code	091	095	099	100(A)	100(B)	AA-2	BB-2
Reference No.	0612	0584F	0528B	0384A	0384A	0384A	0060
Sample Points	B-G-F-A-L	G-A	C-F	C-A	H-A	2-1	5-2
Flow (gal/ton)	328	16.9	45.4	289	3.3	5.85	211
Parameters							
Dissolved Iron	-	2,087	1,379	35	2,185	13,700	1,100
Oil and Grease	2.8	1	-	5.5	2	28	54
Suspended Solids	78	-	1.5	34	93	8	27
pH, Units	2.9-3.9	1.4-1.7	1.9-2.8	4.2	2.0	1.1	1.5-1.7
23 Chloroform	*	0.014	*	0.011	*	NA	NA
39 Fluoranthene	*	*	*	*	*	NA	NA
44 Methylene chloride	-	3.6	-	-	-	NA	NA
60 4,6-dinitro-o-cresol	0.026	ND	ND	ND	*	NA	NA
66 bis-(2-ethylhexyl)phthalate	-	*	-	-	0.055	NA	NA
67 Butyl benzyl phthalate	*	ND	-	ND	*	NA	NA
68 Di-n-butyl phthalate	*	0.010	-	*	*	NA	NA
71 Dimethyl phthalate	*	*	*	ND	ND	NA	NA
85 Tetrachloroethylene	*	0.019	*	ND	ND	NA	NA
87 Trichloroethylene	0.066	ND	*	*	*	NA	NA
114 Antimony	NA	0.182	NA	*	0.40	NA	NA
115 Arsenic	NA	0.23	0.25	NA	NA	NA	NA
118 Cadmium	*	*	*	*	0.020	NA	NA
119 Chromium	-	-	0.34	*	0.56	NA	NA
120 Copper	-	0.69	0.60	0.06	1.55	NA	NA
122 Lead	1.52	*	*	*	0.070	NA	NA
124 Nickel	-	0.73	0.63	-	1.25	NA	NA
128 Zinc	180	0.41	0.12	0.14	0.38	NA	NA

TABLE V-5
SUMMARY OF ANALYTICAL DATA FROM SAMPLED PLANTS
HYDROCHLORIC ACID PICKLING
NET RAW RINSE WASTEWATERS - CONCENTRATIONS (MG/L)
PAGE 2

Plant Code	I-2	U-2	V-2	W-2	X-2	Y-2	
Reference No.	0856P	0480A	0936	-	0060B	-	Average
Sample Points	4-6	1-2	1+6-5	7-3	3-6-7	5-4-6	
Flow (gal/ton)	220	92.9	167.2	227.5	663	87.3	181
Parameters							
Dissolved Iron	7.1	190	290	83	193	305	1,658
Oil and Grease	-	3	1.2	5	-	-	7.9
Suspended Solids	53	*	1.5	16	-	0.4	24
pH, Units	4.5-5.0	1.8	2.5-3.4	2.9-3.8	2.2-2.6	1.7	1.1-5.0
23 Chloroform	NA	NA	NA	NA	NA	NA	*
39 Fluoranthene	NA	NA	NA	NA	NA	NA	*
44 Methylene chloride	NA	NA	NA	NA	NA	NA	0.72
60 4,6-dinitro-o-cresol	NA	NA	NA	NA	NA	NA	*
66 bis-(2-ethylhexyl)phthalate	NA	NA	NA	NA	NA	NA	0.011
67 Butyl benzyl phthalate	NA	NA	NA	NA	NA	NA	*
68 Di-n-butyl phthalate	NA	NA	NA	NA	NA	NA	*
71 Dimethyl phthalate	NA	NA	NA	NA	NA	NA	*
85 Tetrachloroethylene	NA	NA	NA	NA	NA	NA	*
87 Trichloroethylene	NA	NA	NA	NA	NA	NA	0.013
114 Antimony	NA	NA	NA	NA	NA	NA	0.19
115 Arsenic	NA	NA	NA	NA	NA	NA	0.24
118 Cadmium	NA	NA	NA	NA	NA	NA	*
119 Chromium	NA	NA	NA	NA	NA	NA	0.18
120 Copper	NA	NA	NA	NA	NA	NA	0.58
122 Lead	NA	NA	NA	NA	NA	NA	0.32
124 Nickel	NA	NA	NA	NA	NA	NA	0.52
128 Zinc	NA	NA	NA	NA	NA	NA	36.2

ND : Not detected (included in average)
NA : Not analyzed
- : Net calculation yielded negative result (included in average)
* : Net calculation yielded concentration less than 0.010 mg/l (included in average)
(A): Normalizing acid rinse
(B): Cascade rinse

TABLE V-6

SUMMARY OF ANALYTICAL DATA FROM SAMPLED PLANTS
COMBINATION ACID PICKLING
NET RAW RINSE WASTEWATERS - CONCENTRATIONS (MG/L)

Plant Code	121	123	124	125	C	D	F	I	L	O	U	
Reference No.	0900	0088A	0088D	0884E	0424	0248B	0856H	0432K	0440A	0176	0748	Average
Sample Points	B-A	D-A	B-A	C-A	2-6	4-1	1-9	4-1	10-11	29-32	1-8	
Flow (gal/ton)	2,754	310	NA	650	91	1,016	279	1,814	140	974	677	870
Parameters												
Dissolved Iron	148	46	10	5	214	104	60.3	59.2	135	1.7	1,080	169
Oil and Grease	2	2	8	3	1.7	-	0.1	0.6	1.7	9.5	2.2	2.8
Suspended Solids	-	35	2	*	67	10	-	553	173	76	-	83
Fluoride	169	NA	23	50	1,724	76.5	173	31.4	0.5	15.4	500	276
Nitrates	NA	NA	NA	NA	100	11	11.7	14.4	122.4	20.3	133	59
pH, Units	2.4-2.7	2.6-2.7	2.7	3.5-3.6	<1.0	3.8	2.6-2.9	3.2-7.2	2.8-3.0	5.4-8.2	1.9	<1.0-8.2
4 Benzene	0.025	*	*	ND	NA	NA	NA	NA	NA	NA	NA	*
23 Chloroform	0.19	-	-	0.037	NA	NA	NA	NA	NA	NA	NA	0.057
44 Methylene chloride	0.50	*	0.046	0.028	NA	NA	NA	NA	NA	NA	NA	0.14
66 bis-(2-ethylhexyl)phthalate	0.027	0.26	0.15	-	NA	NA	NA	NA	NA	NA	NA	0.11
67 Butyl benzyl phthalate	ND	*	*	0.12	NA	NA	NA	NA	NA	NA	NA	0.03
68 Di-n-butyl phthalate	*	*	0.032	*	NA	NA	NA	NA	NA	NA	NA	*
85 Tetrachloroethylene	0.030	ND	-	*	NA	NA	NA	NA	NA	NA	NA	*
114 Antimony	0.060	NA	NA	NA	NA	NA	NA	NA	NA	NA	NA	0.060
115 Arsenic	0.016	0.01	*	*	NA	NA	NA	NA	NA	NA	NA	*
118 Cadmium	<0.02	<0.01	<0.01	<0.01	0.013	<0.004	<0.004	<0.004	<0.004	<0.004	0.012	0.002
119 Chromium	32.1	3.2	6.2	1.1	137	16	13.4	17.1	24.4	0.48	152	36.6
120 Copper	0.53	0.26	0.010	0.050	9.3	0.11	0.06	0.14	0.80	0.040	1.38	1.15
121 Cyanide	*	0.10	*	*	0.021	*	*	*	*	*	*	0.011
122 Lead	<0.06	<0.10	<0.05	<0.05	<0.03	NA	<0.03	NA	<0.030	<0.030	<0.030	<0.05
124 Nickel	20	7.4	27	0.56	241	9.2	9.4	6.0	12.5	2.14	70	36.8
128 Zinc	0.08	0.08	0.050	-	0.56	-	0.05	0.75	0.07	0.07	5.1	0.62

ND: Not detected (included in average)
NA: Not analyzed
- : Net calculation yielded negative result (included in average)
* : Net calculation yielded concentration less than 0.010 mg/l (included in average)

TABLE V-7

SUMMARY OF ANALYTICAL DATA FROM SAMPLED PLANTS
ACID PICKLING
NET RAW FUME SCRUBBER WASTEWATERS - CONCENTRATIONS (MG/L)

Plant Code	099	100	F	SS-2	W-2	Y-2	
Reference No.	0528B	0384A	0856H	0112A	-	-	Average
Sample Points	F-A	J-H	2-9	3+4+5	6-4	4-6	
Flow (gal/ton)	6.1	3.4	50.4	22.6	45.5	39.7	28.0
Parameters							
Dissolved Iron	45	1,025	45.7	0.55	23.6	3.7	191
Oil and Grease	4	-	0.2	2.0	5.3	-	1.9
Suspended Solids	6	-	-	7.5	4.3	1.7	3.3
Fluoride	NA	NA	1,802	NA	NA	NA	1,802
pH, Units	<1.0	1.0-1.2	1.5-2.0	1.9	2.8-3.7	1.8-1.9	<1.0-3.7
1 Acenaphthene	ND	*	NA	NA	NA	NA	ND
6 Carbon tetrachloride	ND	ND	NA	NA	NA	NA	ND
21 2,4,6-trichlorophenol	*	ND	NA	NA	NA	NA	ND
23 Chloroform	*	*	NA	NA	NA	NA	*
31 2,4-dichlorophenol	ND	ND	NA	NA	NA	NA	ND
34 2,4-dimethylphenol	*	*	NA	NA	NA	NA	*
64 Pentachlorophenol	0.042	*	NA	NA	NA	NA	0.021
66 bis-(2-ethylhexyl)phthalate	0.33	-	NA	NA	NA	NA	0.16
67 Butyl benzyl phthalate	0.035	0.010	NA	NA	NA	NA	0.023
68 Di-n-butyl phthalate	0.024	*	NA	NA	NA	NA	0.012
69 Di-n-octyl phthalate	ND	ND	NA	NA	NA	NA	ND
71 Dimethyl phthalate	*	ND	NA	NA	NA	NA	ND
114 Antimony	NA	0.20	NA	NA	NA	NA	0.20
115 Arsenic	0.080	NA	NA	NA	NA	NA	0.08
118 Cadmium	*	*	NA	NA	NA	NA	*
119 Chromium	0.080	0.16	2.42	NA	NA	NA	0.89
120 Copper	0.10	0.10	0.08	NA	NA	NA	0.09
121 Cyanide	-	*	-	NA	NA	NA	0
122 Lead	*	0.010	-	NA	NA	NA	*
124 Nickel	0.040	0.20	3.3	NA	NA	NA	1.18
128 Zinc	0.10	0.060	0.30	NA	NA	NA	0.15

ND: Not detected (included in average)
NA: Not analyzed
- : Net calculation yielded negative result (included in average)
* : Net calculation yielded concentration less than 0.010 mg/l (included in average)

TABLE V-8

SUMMARY OF ANALYTICAL DATA FROM SAMPLED PLANTS
HYDROCHLORIC ACID PICKLING
NET RAW ABSORBER VENT SCRUBBER WASTEWATERS - CONCENTRATIONS (MG/L)

Plant Code	095	099	W-2	X-2	
Reference No.	0584F	0528B	-	0060B	Average
Sample Points	C-A	E-A	5	2-1	
Flow (gal/ton)	69	170	98.6	200	134
Parameters					
Dissolved Iron	3,663	150	15	63.5	970
Oil and Grease	1	-	2,2	-	0.8
Suspended Solids	65	51	129	70	79
pH, Units	1.7-2.1	2.3-7.5	3.7-7.6	6.9-7.1	1.7-7.6
30 1,2-trans-dichloroethylene	0.016	ND	NA	NA	*
44 Methylene chloride	1.6	0.021	NA	NA	0.81
66 bis-(2-ethylhexyl)phthalate	0.056	0.022	NA	NA	0.039
69 Di-n-octyl phthalate	0.021	ND	NA	NA	0.010
71 Dimethyl phthalate	0.030	*	NA	NA	0.015
85 Tetrachloroethylene	0.014	ND	NA	NA	*
114 Antimony	0.21	NA	NA	NA	0.21
115 Arsenic	0.021	*	NA	NA	0.010
118 Cadmium	*	*	NA	NA	*
119 Chromium	-	1.0	NA	NA	0.50
120 Copper	1.44	0.45	NA	NA	0.95
122 Lead	<0.6	*	<0.05	NA	*
124 Nickel	0.79	0.60	NA	NA	0.70
128 Zinc	1.8	0.35	NA	NA	1.08

ND : Not detected (included in average)
NA : Not analyzed
- : Net calculation yielded negative result (included in average)
* : Net calculation yielded concentration less than 0.010 mg/l (included in average)

ACID PICKLING SUBCATEGORY

SECTION VI

SELECTION OF POLLUTANTS

The final selection of pollutants for the acid pickling subcategory was based on the analysis of wastewater samples collected during this study. A number of pollutants originally limited by the 1976 regulation were considered, because they characterize the wastes from the pickling operation. The pollutants limited by this regulation include some of those limited in the 1976 regulation plus certain toxic pollutants found during extensive monitoring conducted for this study. This section describes the pollutants considered for regulation, presents the rationale for selecting those pollutants, and the process sources of those pollutants.

Pollutant Selection

Conventional Pollutants

In the original regulation, three conventional pollutants were limited for all types of acid pickling operations: total suspended solids, oil and grease, and pH. However, the limitations for the oil and grease were applicable only when pickling wastewaters were treated jointly with cold rolling wastewaters. Wastewater characteristics for operations involving all product types are similar, so that the same limited pollutants can apply to all types of operations in each acid subdivision.

Based upon the information gathered during this study, the Agency decided to retain oil and grease as a limited pollutant in certain instances. Cold rolling wastewaters and pickling wastewaters are often co-treated to take advantage of emulsion breaking properties of the acid wastes. Since this is a common practice, and since the pickling wastewaters can contain moderate amounts of oils, an allowance for oil and grease is included in the limitations and standards.

High levels of suspended solids and low pH are also characteristic of acid pickling wastewaters. Suspended solids are generated in the pickling process and are carried away in either the rinse or fume scrubber waters or in the spent pickle liquor. pH was limited in the original regulation and in this regulation. The pH of the raw wastewaters from pickling operations is always acidic, with typical values ranging from <1 to 4 standard units. Wastewaters with low pH can have detrimental effects if discharged without treatment. Neutralization is required to bring the pH to within the regulated levels of 6.0 to 9.0 standard units.

Other Pollutants

In the original regulation, several nonconventional nontoxic pollutants were limited. Dissolved iron was limited for all three acid pickling operations. In addition, dissolved chromium, fluoride, and dissolved nickel were all limited for combination acid pickling operations. (The fluoride limitation applied only to those lines using hydrofluoric acid). Limitations for these four pollutants are not being retained in the present regulation. However, chromium and nickel are now limited on a total rather than a dissolved basis for the combination acid pickling subdivision. These limitations will control the discharge of dissolved chromium and nickel.

Limitations for dissolved iron and fluoride have not been promulgated. Toxic metals are, however, limited for each segment. The Agency believes that the limitations for the toxic metals will effectively control the discharge of these pollutants. Treatment for dissolved iron and fluoride is the same as the treatment for toxic metals, i.e., chemical precipitation. The limitations for the toxic metals require efficient operation of the treatment system, and, therefore, will result in effective removal of dissolved iron and fluoride as well as toxic metals.

Toxic Pollutants

The Agency found that toxic pollutants are present at significant levels in the discharges from acid pickling operations. During the sampling phase of this study, the Agency conducted additional monitoring for the pollutants limited in the 1976 regulation, toxic pollutants, and other pollutants. Based upon this sampling and information provided by the industry, the Agency developed a list of toxic pollutants known to be present in pickling wastewaters, (Table VI-1).

The Agency tabulated and calculated a composite concentration value for each pollutant in the raw wastewater. A net value was used to describe the contribution of pollutants from the pickling process. If a pollutant was found in the raw wastewater at an average concentration (net) of 0.010 mg/l or greater, it was considered to be characteristic of acid pickling wastewater and is addressed accordingly throughout this report. Also shown in Table VI-2 are the other pollutants for which limitations have been considered.

Several organic pollutants were detected at concentrations greater than 0.010 mg/l, but none were considered for regulation, as indicated by their absence from Table VI-2. The three possible situations leading to the omission of these toxic organic pollutants are: the pollutant's presence is not due to acid pickling operations; the pollutant is uniquely occurring in the wastewater; or the pollutant is present at or near its limit of treatability. Methylene chloride was omitted, because it was a solvent used as a cleaning agent for sampling equipment which was in the laboratory when toxic organic pollutant monitoring was conducted. Its presence is ascribed to these

uses and not to acid pickling operations. Also, some phthalate compounds were detected at levels greater than 0.010 mg/l, but they are not believed to be characteristic of acid pickling wastewaters. The Agency believes the presence of phthalates is probably related to plasticizers in the tubing used in collecting the samples. The other toxic organic pollutants, except for chloroform, were present in the acid rinsewaters at or near treatable levels and were found in no more than one of the samples taken for each acid subdivision. Chloroform was found in the rinsewaters at two plants in the hydrochloric acid pickling subdivision at 0.011 mg/l and 0.014 mg/l. These concentrations cannot be effectively reduced with additional treatment, including adsorption on activated carbon. For these reasons, the Agency did not limit toxic organic pollutants in this subcategory.

As noted in Table VI-2, many toxic metal pollutants were detected at concentrations greater than 0.010 mg/l. These pollutants and the pollutants limited in the 1976 regulation are present in the wastewater because of the extreme chemical action that occurs during the pickling process. The acids remove the surface scale from the steel products which contain the toxic metals. While these pollutants may vary in concentration from line to line, they are characteristic of the process. The Agency has established effluent limitations and standards to regulate the discharge of these pollutants.

TABLE VI-1

PRIORITY POLLUTANTS KNOWN TO BE PRESENT IN ACID PICKLING OPERATIONS

		Sulfuric Acid Pickling	Hydrochloric Acid Pickling	Combination Acid Pickling
4	Benzene	-	-	X
22	p-chloro-m-cresol	X	-	-
23	Chloroform	X	X	X
30	1,2-trans-dichloroethylene	-	X	-
44	Methylene Chloride	X	X	X
57	2-nitrophenol	X	-	-
60	4,6-dinitro-o-cresol	X	X	-
65	Phenol	-	X	-
66	Bis-(2-ethylhexyl)phthalate	X	X	X
67	Butyl benzyl phthalate	X	X	X
68	Di-n-butyl phthalate	X	X	X
69	Di-n-octyl phthalate	-	X	-
70	Diethyl phthalate	X	-	-
71	Dimethyl phthalate	X	X	-
85	Tetrachloroethylene	-	X	X
87	Trichloroethylene	-	X	-
114	Antimony	-	X	X
115	Arsenic	X	X	X
118	Cadmium	X	X	X
119	Chromium	X	X	X
120	Copper	X	X	X
121	Cyanide	-	-	X
122	Lead	X	X	X
124	Nickel	X	X	X
126	Silver	X	-	-
128	Zinc	X	X	X

X: Parameter known to be present in at least one of the waste sources.
-: Parameter not found.

TABLE VI-2

SELECTED POLLUTANTS - ACID PICKLING OPERATIONS

		Sulfuric Acid Pickling	Hydrochloric Acid Pickling	Combination Acid Pickling
	Dissolved Iron	X	X	X
	Fluoride	-	-	X
	Oil and Grease	X	X	X
	Suspended Solids	X	X	X
	pH	X	X	X
114	Antimony	-	X	X
115	Arsenic	X	X	-
118	Cadmium	X	X	X
119	Chromium	X	X	X
120	Copper	X	X	X
122	Lead	X	X	X
124	Nickel	X	X	X
126	Silver	X	-	-
128	Zinc	X	X	X

X: Parameter selected.
-: Parameter not selected.

ACID PICKLING SUBCATEGORY

SECTION VII

CONTROL AND TREATMENT TECHNOLOGY

Introduction

This section reviews existing wastewater treatment practices for the acid pickling subcategory and presents those technologies which were considered by the Agency in developing this regulation. The sampling data gathered at the acid pickling operations visited during this study and a description of the treatment practiced at each are also presented.

As a first step, it was necessary for the Agency to determine the level of existing wastewater treatment in the acid pickling subcategory. The Agency then developed BPT, BAT, BCT, and PSES alternative treatment systems in an "add-on" fashion to this base level. The NSPS and PSNS alternative treatment systems, however, were not developed in this manner. Since NSPS and PSNS apply to new acid pickling operations, the Agency did not consider the "add-on" approach. The alternative treatment systems (levels of treatment) and their corresponding effluent characteristics are summarized in Sections IX through XIII.

Summary of Treatment Practices Currently Employed

Because there is the potential for three different wastewater sources, the treatment systems used on each source are discussed in detail below, prior to a discusion of the general treatment scheme.

Treatment of Spent Pickle Liquor

Spent pickle liquor is presently classified as a hazardous waste under the Resource Conservation and Recovery Act (RCRA) except where it is reused as a wastewater treatment chemical. There are several different methods for handling spent pickle liquor, including off-site disposal, treatment processes, or recovery/regeneration processes.

A. Disposal Methods

The disposal methods, including contract hauling and deep well injection, may not be ideal solutions for handling the spent acid concentrates. Hauling and deep well injection may result in relocation of a pollution problem. However, if properly performed, these disposal methods can result in negligible environmental impacts. Contract hauling is commonly used in the industry, and several plants use deep well injection.

B. Treatment Processes

Treatment processes include chemical neutralization and precipitation. A detailed discussion of this process is provided under treatment of acid rinsewaters. Treatment may be performed separately or jointly with the other wastewaters from the pickling operation. These methods are commonly employed throughout the industry.

C. Acid Recovery and Regeneration

The ideal method for handling spent pickle liquor is to recycle the wastes through recovery/regeneration processes. These processes minimize handling costs and either reduce or eliminate the discharge of pollutants. In addition, the pickling operation itself may be made more efficient, since the acid bath can be kept at a relatively constant strength.

The Agency has identified the following recovery and regeneration systems which are presently operated in this country. These systems are available and have been proven effective at many pickling operations.

1. Sulfuric Acid Recovery

Acid recovery, which is the most common method for recovering spent sulfuric acid, removes the ferrous sulfate present in the spent acid through crystallization. Spent pickle liquor high in iron content is pumped into a crystallizer, where the iron is precipitated (under refrigeration or vacuum) as ferrous sulfate heptahydrate crystals. As the crystals are formed, water is removed with the crystals, and the free acid content of the solution increases to a level which is reusable in the pickling operation. The crystals are separated from solution, and the recovered acid solution is pumped back to the pickling tank. The by-product ferrous sulfate heptahydrate is commercially marketable. The crystals are dried, bagged, and marketed, or sold in bulk quantities. Ferrous sulfate, commonly referred to as "copperas," is used in appreciable quantities in numerous industries, including the manufacture of inks, dyes, paints, fertilizers and magnetic tapes. It is also used as a coagulant in water and wastewater treatment. See Figures III-5 and III-6 for the two types of available recovery operations. As an added note, recovery processes, which produce ferrous sulfate monohydrate crystals as a by-product are also available. This process is usually carried out at elevated temperatures.

2. Hydrochloric Acid Regeneration

The only commercially proven technology to regenerate spent hydrochloric acid is through thermal decomposition. The

spent pickle liquor contains free hydrochloric acid, ferrous chloride, and water. The liquor is heated to remove some of the water through evaporation and to concentrate the solution. The concentrated solution is then further heated to 925° to 1,050°C (1,700° to 1,920°F). At this temperature, water is completely evaporated and the ferrous chloride decomposes into iron oxide (ferric oxide, Fe_2O_3) and hydrogen chloride (HCl) gas. The iron oxide is separated and removed from the system. The hydrogen chloride gas is reabsorbed in water (sometimes rinsewater or scrubber water is used), to produce hydrochloric acid solution (generally from 15% to 21% HCl) which is reused in the pickling operation. There are several types of "roaster" processes in operation. The basic differences among the processes are the design and operation of the roaster/reactor and the recovery equipment (see Figures III-7 through III-9).

3. Combination Acid Pickling

The Agency is unaware of any operating nitric or hydrofluoric acid recovery process operating in this country. It has been reported that such a system is installed and successfully operating in the People's Republic of China. However, due to the lack of operating and performance data, the Agency is not basing any of the limitations or standards on this technology.

A summary of the treatment practices in each subdivision for the disposal of spent pickle wastes is listed below:

Acid Subdivision	Central Treatment	Acid Recovery	Contract Hauling	Deep Well	POTW Discharge
Sulfuric	38.3%	2.6%	44.5%	5.2%	9.4%
Hydrochloric	13.7%	8.4%	53.7%	12.6%	11.6%
Combination	46.0%	0%	44.0%	0%	10.0%

Treatment of Fume Scrubber Water

Many pickling lines include wet scrubber systems to control the emission of fumes from the operation. Water is used to scrub the fumes and thus becomes contaminated with the same type of pollutants which are discharged from the other waste sources. The flow rates from the scrubbers can be very large and contain high pollutant loads.

One method of controlling the amount of pollutants discharged from this source is to recycle the fume scrubbing wastewater. Recycle rates of 100% have been reported for many operations, and recycle rates ranging between 90-95% of the total wastewater flow are typical.

High recycle rates are achievable because corrosion does not occur. The scrubbers are usually constructed of fiberglass, which is not

affected by low pH. The degree of recycle is limited by the buildup of dissolved solids in the recycle loop. At very high levels, the ability of the scrubber to remove the acid from the fumes could be reduced.

The discharges from fume scrubbers are subject to varying degrees of treatment. The systems used to treat these wastewaters are the same as those used to treat rinsewaters. These systems are described below.

Treatment for Pickle Rinsewaters

Most of the operations that treat pickle rinsewaters do so in central treatment systems. Some of the wastewaters that are often combined with the pickling wastes are cold rolling wastewaters and wastewaters from alkaline cleaning, salt bath descaling and hot coating operations. The pickling wastewaters are often combined with cold rolling wastewaters, because the acid in the pickling wastewaters helps break oil emulsions in cold rolling wastewaters. Pickling wastewaters are often treated together with alkaline wastewaters so that they neutralize each other. This can greatly reduce the costs for chemicals necessary for neutralization. In any event, most existing treatment systems have components which accomplish the following: neutralize the acid in the wastes; precipitate dissolved metals out of solution; promote flocculation of solids; and provide sufficient sedimentation of the solids and precipitated metals. The sludge generated in the treatment process is dewatered before final disposal.

Control and Treatment Technologies
Considered for Toxic Pollutant Removal

Since the Agency found toxic metal pollutants at significant levels in the discharges from acid pickling operations, it evaluated treatment systems designed primarily to remove these pollutants.

The alternative treatment systems considered by the Agency for acid pickling operations are described below. These systems have been demonstrated to varying degrees in the pickling subcategory and in other industrial applications for wastewaters with similar characteristics.

A. Lime Precipitation

Chemical treatment of acid pickling wastewaters with lime and polymer flocculation is well demonstrated at many pickling operations in the industry. Lime precipitation is an effective method for removing toxic metal pollutants from the wastewater. Lime precipitation involves the addition of lime, either in the dry or hydrated slurry form, to the wastewater in a mixing tank. The dissolved metals in the wastewater precipitate as metal hydroxides. These precipitates, along with other suspended

solids in the wastewater, are subsequently removed by sedimentation or filtration.

Lime is commonly used to neutralize acidic wastes because of economic considerations. Other chemicals such as caustic are available, but are considerably more expensive. In certain applications, caustic or other neutralizing agents could, however, offer advantages over lime. High removal efficiencies of metals with lime precipitation are well demonstrated in this subcategory. Low effluent levels have also been demonstrated in other steelmaking subcategories where lime precipitation is used for wastewater treatment.

A final consideration relating to lime precipitation systems is the generation of solid wastes resulting from its use. The large amounts of sludge generated can be safely disposed of by landfilling. This is the most common disposal method practiced in the industry.

The amount of sludge produced during treatment of pickling wastewaters can be minimized through recycling of the sludge within the treatment process. In conventional lime precipitation systems, the entire volume of sludge produced is discharged for disposal. Alternatively, a portion of the sludge may be recycled to the head of the treatment plant to act as seed for the treatment process. The sludges produced in this system are considerably denser than the sludge produced by the conventional process. The sludge volume can be reduced by over 95%. This method is becoming common practice in the industry.

B. Flow Reduction

The discharge of rinsewaters can be minimized through the use of cascade or high pressure/high temperature spray rinse systems. In cascade rinsing the conventional rinse systems, which generally involve immersion or spraying (low pressure) in one or more large tanks, are replaced by a series of smaller tanks. The fresh water makeup is added to the last rinse tank and cascades to the first rinse tank. The product moves in the opposite direction to the water flow, so that it is rinsed by progressively cleaner water. The product is sequentially immersed in each of the tanks, or is rinsed by sprays located over each of the tanks. Cascade rinsing can reduce the discharge by over 90%.

The Agency has only recently become aware of a high pressure/high temperature rinse system, which has been applied in the industry over the last few years. In this system, the temperature of the rinsewater is elevated by contact with steam. The heated rinsewater is accelerated through a venturi and applied to the product through a series of sprays located on both sides of the product. The elevated temperature and pressure of the rinsewater improves the efficiency of rinsing. The

rinsewater volume is also reduced. At this time, the Agency has only limited data for this system and is, therefore, unable to develop limitations and standards based upon this technology. Since the use of this technology will result in lower wastewater volumes than those used by the Agency in developing the limitations and standards for existng sources, the Agency believes that plants with this technology will not have problems in achieving the appropriate limitations and standards. In fact, these plants will probably have an advantage because of lower water use rates.

C. Vapor Compression Distillation (Evaporation)

Vapor compression distillation is typically used to concentrate a high dissolved solids waste stream (3,000 - 10,000 mg/l) to a slurry consistency (approximately 100,000 mg/l). The slurry discharge can be dried in a mechanical drier or allowed to crystallize in a small solar or steam-heated pond prior to final disposal. The distillate quality water generated by this system can be recycled back to the acid pickling operation thereby eliminating all discharges. One desirable feature of this system is its relative freedom from scaling. Because of the unique design of the system, calcium sulfate and silicate crystals grow in solution as opposed to depositing on heat transfer surfaces. Economic operation of this system requires a high calcium to sodium ratio (hard water).

The installation of this system may be the only possible way to achieve zero discharge of process water at all acid pickling operations. However, the high cost and energy intensive nature of this system makes it unattractive.

Summary of Monitoring Data

Table VII-1 provides a key for the control and treatment technology abbreviations used in the tables throughout this report. Raw wastewater and effluent monitoring data for the acid pickling operations visited are presented by subdivision in Tables VII-2 through VII-9. The concentration values presented in the tables represent, except where footnoted, averages of gross measured values. In many cases these data were obtained from central treatment systems. These central treatment data are used since pickling wastewaters are commonly co-treated with wastewaters from other finishing operations. Additionally, these data are representative of the pollutant levels that can be achieved with separate treatment of pickling wastewaters. Spent concentrates, fume scrubber wastewaters, and absorber vent scrubber wastewaters are listed in the raw form only. No effluent values are given, since these wastewaters are universally treated jointly with the other pickling wastewaters. In several instances, the effluent waste loads (lbs/1000 lbs) for certain central treatment operations indicated on the data tables represent apportioned loads. In these central treatment systems, the percentage contribution of an individual operation to the total treatment system influent load is

determined and subsequently applied to the total effluent load. This procedure was repeated for each pollutant. By using this procedure, the Agency estimated the effects of treatment on the pollutant loads from individual processes with discharges to a central treatment facility. Following the determination of the raw and effluent waste loads, the pollutant load reductions accomplished by each operation for each pollutant were then determined.

Summary of Long-Term Analytical Data

As a supplement to the sampled plant monitoring data, long-term effluent analytical data from operations responding to the D-DCPs are presented in Volume I.

Plant Visits

Brief descriptions of the visited plants follow. Treatment system flow schematics are provided at the end of this section.

Plant A (0900) - See Plant 121

Plant C (0424) - Figure VII-1 (Combination)

This plant recently completed the installation of a new central treatment facility. At the time of the sampling inspection, the rinsewaters from bar and plate pickling lines were combined prior to entering an equalization tank. From the equalization tank, the wastewaters were transferred to a mixing tank where lime and coagulant aids were added. The neutralized wastes then were settled in a sedimentation tank. The discharge was sent to a receiving stream. The spent pickle liquors from the bar and plate lines are discharged to a holding tank, and then are hauled away by a contractor.

Plant D (0248B) - Figure VII-2 (Combination)

At the time of the sampling visit, the acid rinsewaters generated by the continuous strip pickling operation were discharged to a receiving stream without treatment. However, a central treatment system which treats wastewaters from this line was completed in 1978 and is now in operation.

Plant F (0856H) - Figure VII-3 (Combination)

Pickle rinsewater and fume scrubber water are combined prior to entering an equalization tank. After equalization, lime is added and the pickling wastewaters are combined with hot forming wastewaters in a scale pit. From the scale pit, the combined wastewaters are settled in a settling basin. The spent pickle liquor at this operation is hauled away to a company owned disposal site.

Plant H-2 (0432A) - Figure VII-4 (Sulfuric)

Dunk rinses are cascaded to minimize flow; spray and other rinses are blended with other plant wastewaters for treatment by gas flotation, neutralization with lime or caustic, flocculation with polymers, and clarification with thickening and vacuum filtration of clarifier underflows. Spent concentrates are hauled off-site by a contractor.

Plant I (0432K) - Figure VII-5 (Combination)

This plant employs lime neutralization of the spent pickling solutions,mixing with the acid rinses, and sedimentation in a lagoon to treat this wastewater generated by the strip pickling process.

Plant I-2 (0856P) - Figure VII-6 (Sulfuric)

Waste pickle liquor is hauled away by a private contractor. All rinses are combined with other plant wastes in a terminal lagoon and discharged to a canal.

Plant I-2 (0856P) - Figure VII-6 (Hydrochloric)

This plant dilutes pickle liquor and rinses together with other plant wastes in a terminal lagoon and then discharges to a canal.

Plant L (0440A) - Figure VII-7 (Combination)

This plant discharges rinsewaters generated by the batch bar pickling operation to a POTW. Waste pickle liquors are treated at the plant employing lime neutralization.

Plant O (0176) - Figure VII-8 (Combination)

This plant treats its pickle rinsewaters and wastes from other processes in a central treatment system. The pickling wastes comprise 50% of the total flow to the central treatment system. Central treatment consists of equalization, sodium hydroxide neutralization, aeration, and clarification. Sludges are dewatered in a sludge lagoon. Spent pickle liquors at this operation are hauled off-site by a private contractor.

Plant O-2 (0590) - Figure VII-9 (Sulfuric)

This plant employs batch evaporative crystallization of spent sulfuric acid. Acid is recovered and ferrous sulfate heptahydrate is produced as a by-product. Rinses are recycled to the process as makeup to the pickle tank. Zero discharge is achieved.

Plant P-2 (0312) - Figures VII-10 and VII-11 (Sulfuric)

This plant recovers waste pickle liquor by a batch vacuum crystallization recovery system. Rinses are metered to the sewer.

Plant Q-2 (0894) - Figure VII-12 (Sulfuric)

This plant practices batch pickle liquor recovery through the cooling of spent pickle liquor and crystallization of ferrous sulfate heptahydrate. Rinses and mists from the fume filter are recycled back to the pickle tank. Zero discharge is achieved.

Plant R (0240A) - Figure VII-13 (Sulfuric)

This plant neutralizes spent concentrates and rinses from batch specialty steel pickling operations with lime. The neutralized wastewaters are discharged to a sludge lagoon. There is no discharge from the sludge lagoon.

Plant R-2 (0240B) - Figure VII-14 (Sulfuric)

Pickle liquor and rinses are combined in an equalization tank, mixed and treated with acetylene sludge, lagooned, and discharged to a receiving stream.

Plant S-2 (0256G) - Figure VII-15 (Sulfuric)

Concentrated pickle liquor is contract hauled. Standing rinse is reused as makeup to the pickle tank. Running rinse is treated with lime and lagooned. The lagoon overflow is recycled, and the sludge is contract hauled.

Plant T-2 (0792B) - Figure VII-16 (Sulfuric)

Sulfuric acid is recovered from spent pickle liquor by evaporative concentration. Rinses are cascaded and used as pickle tank makeup. Steam condensate is used as a final product rinse. There is no discharge of wastewaters from this operation.

Plant U (0748) - Figure VII-17 (Combination)

This plant employs batch lime neutralization of the acid rinses after combining the rinses with wastes from a degreasing line. This operation also neutralizes its spent pickle liquor prior to evaporating this waste stream to extinction. The effluent from the batch treatment system is discharged to a receiving stream.

Plant U-2 (0480A) - Figure VII-18 (Hydrochloric)

The waste pickle liquors and rinsewaters from the batch pickling operations are neutralized in a batch treatment tank by sodium carbonate prior to discharge to a municipal sewerage system.

Plant V-2 (0936) - Figure VII-19 (Hydrochloric)

The spent pickle liquor from the batch pickling operations is contract hauled. Rinses are neutralized with sodium hydroxide prior to discharge to a municipal sewerage system.

Plant W-2 - Figure VII-20 (Hydrochloric)

Waste pickle liquor is treated by pyrolytic regeneration of hydrochloric acid. Rinses and fume scrubber wastes are diluted and metered to a sewer. Absorber vent scrubber wastes are neutralized with caustic solution prior to discharge to a receiving stream.

Plant X-2 (0060B) - Figures VII-21 and VII-22 (Hydrochloric)

This plant practices spent acid recovery by hydrochloric acid regeneration. Rinses are diluted and discharged to a receiving stream. Absorber vent scrubber wastes are treated in a clarifier along with other plant wastes.

Plant Y-2 - Figures VII-23 and VII-24 (Hydrochloric)

Spent pickle acid is recovered by pyrolytic regeneration of hydrochloric acid. Rinses and absorber vent scrubber wastes are diluted and discharged to a receiving stream.

Plant Z-2 (0396D) - Figure VII-25 (Hydrochloric)

Refer to Plant 093.

Plant AA-2 (0384A) - Figure VII-26 (Hydrochloric)

Refer to Plant 100.

Plant BB-2 (0060) - Figure VII-27 (Hydrochloric)

Concentrated pickle liquor is disposed of by off-site contract hauling to a regeneration system owned by the same company or in an on-site deep well. Rinses are equalized; mixed with cold rolling wastewaters; neutralized; aerated; treated with polymers; clarified; lagooned; and discharged to a receiving stream. Sludge from the clarifiers is dewatered by vacuum filters prior to transport to a dump.

Plant QQ-2 (0584E) - Figure VII-28 (Sulfuric)

Spent concentrates and fume scrubber blowdowns are collected, equalized, filtered, and discharged to a deep well. Rinsewaters are blended with other plant wastewaters and treated by chromium reduction; emulsion breaking; polymer addition; neutralization with lime; clarification; and discharge through a settling lagoon with surface skimming for oil removal.

Plant SS-2 (0112A) - Figure VII-29 (Sulfuric)

Spent concentrates are collected, equalized, and discharged to a receiving stream. Fume scrubber blowdowns and rinsewaters are combined with all other plant wastes; blended; skimmed; neutralized with lime; aerated; flocculated with polymers; and transferred to a

settling lagoon; from which sludges are treated by cyclones and thickeners.

Plant TT-2 (0856D) - Figure VII-30 (Sulfuric)

Waste pickle liquors are collected, neutralized, and transferred to off-site evaporation ponds. Rinses are cascaded, blended with fume scrubber blowdowns, and discharged without treatment. A treatment facility is under construction.

Plant WW-2 (0868A) - Figure VII-31 (Sulfuric)

Spent concentrates are filtered and injected into deep wells. Rinsewaters are blended with other plant wastewaters, flocculated with polymers and alum, neutralized with lime, clarified, skimmed and discharged through a terminal settling lagoon.

Plant 090 (0476A) - Figure VII-32 (Sulfuric)

This plant treats rinses from batch pipe and tube pickling in a central treatment facility that includes equalization, oil skimming, aeration, neutralization with lime, polymer addition, clarification, and finally, discharge to a receiving stream. Spent concentrates are recovered by a vacuum crystallization acid recovery system.

Plant 091 (0612) - Figure VII-33 (Sulfuric)

Concentrates from a batch rod pickling operation are hauled off-site for disposal. Rinses are blended and equalized with hydrochloric acid pickling and galvanizing wastewaters; aerated; neutralized with lime; clarified; and, filtered prior to discharge.

Plant 091 (0612) - Figure VII-33 (Hydrochloric)

Spent pickle liquor and rinses are neutralized with lime, oxidized, clarified, and filtered through pressure sand filters prior to discharge to a receiving stream. Clarifier sludge is dewatered by vacuum filters prior to disposal.

Plant 092 (0088A) - Figure VII-34 (Sulfuric and Hydrochloric)

Refer to Plant 123.

Plant 093 (0396D) - (Hydrochloric)

Spent pickle liquor and rinses are mixed with galvanizing and cold rolling wastewaters, neutralized and clarified with polymer addition prior to discharge to a municipal sewerage system. Sludges from the clarifier are dewatered by vacuum filtration prior to transport to a landfill. Cold rolling and galvanizing lines also contribute wastewaters to this treatment system in such a way that the pickling wastewaters can not be isolated. Therefore the Agency did not rely on data from this plant in establishing limitations and standards.

Plant 094 (0948C) - Figure VII-35 (Sulfuric)

Spent concentrates are hauled off-site. Rinses are combined with all other finishing mill wastewaters, equalized, skimmed, treated with lime and polymer, and clarified via a thickener. Underflows are centrifuged and discharged.

Plant 095 (0584F) - Figures VII-36 and VII-37 (Hydrochloric)

This plant practices spent acid recovery by hydrochloric acid regeneration. Some rinsewater is recycled to fume scrubbers and absorber vent scrubbers. The remaining rinsewater and scrubber wastes are sent to waste lagoons.

Plant 096 (0112I) - Figure VII-38 (Sulfuric)

Batch fastener pickling wastes are blended with galvanizing, aluminizing, and electroplating wastes; aerated and neutralized with lime; thickened; and filtered. Filtrates are discharged to a holding lagoon for plant-wide reuse or discharge.

Plant 097 (0760) - Figure VII-39 (Sulfuric)

Spent concentrates are recovered by a two-stage evaporation and crystallization recovery system designed to produce dry copperas. Cold water rinses are used as the pickle tank makeup, while hot rinses are discharged to a POTW for further treatment.

Plant 098 (0684D) - Figure VII-40 (Sulfuric)

Three lines pickle bar, wire, and special shapes. Rinses are concentrated and dumped to pickle tanks as makeup. Acid vapors are collected by a demister and recycled to pickle tanks. All sumps and foundation drains are collected and transferred to storage. All liquid wastes are contract hauled off-site.

Plant 099 (0528B) - Figure-41 (Hydrochloric)

The spent pickle liquor is recovered by acid regeneration. Rinses and fume scrubber wastes are mixed with other plant wastes, neutralized and settled in ponds prior to discharge to a receiving stream.

Plant 100 (0384A) - Figure VII-42 (Hydrochloric)

This plant utilizes cascade rinse systems with the rinsewater being used as makeup to a fume scrubber. Spent pickle liquor and fume scrubber wastes are combined with cold rolling wastewaters and disposed of by deep well injection.

Plant 121 and A (0900) - Figure VII-43 (Combination)

This operation was visited on two occasions for this study. The first time the operation was designated as Plant A, and for the second

sampling trip the operation was designated as Plant 121. The pickle rinse and fume scrubber waters are combined with other small volume waste flows before entering a central treatment system. The pickling wastes comprise approximately 75% of the total wastewater flow entering the central treatment system.

The combined wastes are treated by equalization, neutralizaton and clarification. The underflow from the clarifiers goes to thickeners and centrifuges. The overflow from the clarifiers goes to a polishing tank from which approximately 50% of the treated water is discharged to a receiving stream. The waste pickle liquor is hauled off-site by private contractors.

Plant 122 (0176) (Combination)

Wastewaters from hot forming, scale removal, alkaline cleaning, and hot coating operations are combined with pickling wastewaters for central treatment. The pickling wastewaters can not be isolated from the other wastewaters, therefore the Agency did not rely on the data from this plant in establishing limitations and standards.

Plant 123 (0088A) - Figure VII-34 (Combination)

The rinsewaters from this combination acid pickling operation (sample point D) are combined with other pickling and hot mill wastes prior to entering a central treatment system. The combined waste stream then undergoes equalization, neutralization with lime, flocculation with polymers, and clarification. Sludges produced are dewatered in vacuum filters. Spent acid solutions are hauled off-site by private contractors.

Plant 125 (0884F) - Figure VII-44 (Combination)

This operation treats its pickle rinse and fume scrubber blowdown water in a three-compartment lime neutralization pit prior to discharging these wastes to a POTW.

Effect of Make-up Water Quality

Where the mass loading of a limited pollutant in the make-up water to a process is small in relation to the raw waste loading of that pollutant, the impact of make-up water quality on wastewater treatment system performance is not significant, and, in many cases, not measureable. In these instances, the Agency has determined that the respective effluent limitations and standards should be developed and applied on a gross basis.

As shown in Tables VII-10 to VII-12, the impact of make-up water quality on raw wastewater pollutant loadings for the sampled acid pickling operations is not significant for any of the toxic metal pollutants. The suspended solids levels in make-up waters for hydrochloric acid pickling operations were found to be significant when compared to raw waste loadings at the sampled plants. Most of

the loading in the intake waters can be attributed to one abnormally high value of 196 mg/l found at one plant. Notwithstanding the above, the model treatment technology includes lime or caustic precipitation which will result in formation of metal hydroxide precipitates and a hydroxide floc. The suspended solids concentrations after lime or caustic addition are significantly higher than raw waste concentrations and the removal of the hydroxide floc will also result in removal of suspended solids contained in make-up waters. Thus, the Agency concludes that the impact of make-up water quality on raw waste loadings for acid pickling operations are not significant, and the limitations and standards should be applied on a gross basis, except to the extent provided by 40 CFR 122.63(h).

TABLE VII-1

OPERATING MODES, CONTROL AND TREATMENT TECHNOLOGIES AND DISPOSAL METHODS

Symbols

A. Operating Modes

1. OT — Once-Through

2. Rt,s,n — Recycle, where t = type waste
s = stream recycled
n = % recycled

t: U = Untreated
T = Treated

s		n
P	Process Wastewater	% of raw waste flow
F	Flume Only	% of raw waste flow
S	Flume and Sprays	% of raw waste flow
FC	Final Cooler	% of FC flow
BC	Barometric Cond.	% of BC flow
VS	Abs. Vent Scrub.	% of VS flow
FH	Fume Hood Scrub.	% of FH flow

3. REt,n — Reuse, where t = type
n = % of raw waste flow

t: U = before treatment
T = after treatment

4. BDn — Blowdown, where n = discharge as % of raw waste flow

B. Control Technology

10. DI — Deionization

11. SR — Spray/Fog Rinse

12. CC — Countercurrent Rinse

13. DR — Drag-out Recovery

C. Disposal Methods

20. H — Haul Off-Site

21. DW — Deep Well Injection

TABLE VII-1
OPERATING MODES, CONTROL AND TREATMENT
TECHNOLOGIES AND DISPOSAL METHODS
PAGE 2

C. Disposal Methods (cont.)

22.	Qt,d	Coke Quenching, where t = type d = discharge as % of makeup t: DW = Dirty Water CW = Clean Water
23.	EME	Evaporation, Multiple Effect
24.	ES	Evaporation on Slag
25.	EVC	Evaporation, Vapor Compression Distillation

D. Treatment Technology

30.	SC	Segregated Collection
31.	E	Equalization/Blending
32.	Scr	Screening
33.	OB	Oil Collecting Baffle
34.	SS	Surface Skimming (oil, etc.)
35.	PSP	Primary Scale Pit
36.	SSP	Secondary Scale Pit
37.	EB	Emulsion Breaking
38.	A	Acidification
39.	AO	Air Oxidation
40.	GF	Gas Flotation
41.	M	Mixing
42.	Nt	Neutralization, where t = type t: L = Lime C = Caustic A = Acid W = Wastes O = Other, footnote

TABLE VII-1
OPERATING MODES, CONTROL AND TREATMENT
TECHNOLOGIES AND DISPOSAL METHODS
PAGE 3

D. Treatment Technology (cont.)

43. FLt — Flocculation, where t = type

t: L = Lime
A = Alum
P = Polymer
M = Magnetic
O = Other, footnote

44. CY — Cyclone/Centrifuge/Classifier

44a. DT — Drag Tank

45. CL — Clarifier

46. T — Thickener

47. TP — Tube/Plate Settler

48. SLn — Settling Lagoon, where n = days of retention time

49. BL — Bottom Liner

50. VF — Vacuum Filtration (of e.g., CL, T> or TP underflows)

51. Ft,m,h — Filtration, where t = type
m = media
h = head

t	m	h
D = Deep Bed	S = Sand	G = Gravity
F = Flat Bed	O = Other, footnote	P = Pressure

52. CLt — Chlorination, where t = type

t: A = Alkaline
B = Breakpoint

53. CO — Chemical Oxidation (other than CLA or CLB)

TABLE VII-1
OPERATING MODES, CONTROL AND TREATMENT
TECHNOLOGIES AND DISPOSAL METHODS
PAGE 4

D. Treatment Technology (cont.)

54. BOt — Biological Oxidation, where t = type

t: An = Activated Sludge
n = No. of Stages
T = Trickling Filter
B = Biodisc
O = Other, footnote

55. CR — Chemical Reduction (e.g., chromium)

56. DP — Dephenolizer

57. ASt — Ammonia Stripping, where t = type

t: F = Free
L = Lime
C = Caustic

58. APt — Ammonia Product, where t = type

t: S = Sulfate
N = Nitric Acid
A = Anhydrous
P = Phosphate
H = Hydroxide
O = Other, footnote

59. DSt — Desulfurization, where t = type

t: Q = Qualifying
N = Nonqualifying

60. CT — Cooling Tower

61. AR — Acid Regeneration

62. AU — Acid Recovery and Reuse

63. ACt — Activated Carbon, where t = type

t: P = Powdered
G = Granular

64. IX — Ion Exchange

65. RO — Reverse Osmosis

66. D — Distillation

TABLE VII-2

SUMMARY OF ANALYTICAL DATA FROM SAMPLED PLANTS
SULFURIC ACID PICKLING
GROSS RAW SPENT CONCENTRATES - CONCENTRATIONS AND LOADS

Plant Code	091		092		097		H-2		P-2	
Reference No.	0612		0088A		0760		0432A		0312	
Sample Points	R		C		E		2		3	
Flow (gal/ton)	3.5		14.6		7.2		14.7		17.6	
Parameters	mg/l	lbs/ 1000 lbs	mg/l	lbs/ 1000 lbs	mg/l	lbs/ 1000 lbs	mg/l	lbs/ 1000 lbs	mg/l	lbs/ 1000 lbs
Dissolved Iron	63,000	0.92	38,500	2.34	46,000	1.38	47,900	2.94	46,800	3.43
Oil and Grease	11	0.00016	17	0.0010	46	0.0014	NA	NA	99	0.0073
Suspended Solids	2,520	0.0368	306	0.0186	319	0.00958	18,000	1.1	234	0.0172
pH, Units	<1.0		<1.0		<1.0		<1.0		1.4	
115 Arsenic	NA	NA	0.17	0.000010	0.18	0.000005	NA	NA	NA	NA
118 Cadmium	0.26	0.000004	0.28	0.000017	0.46	0.000014	NA	NA	NA	NA
119 Chromium	269	0.00392	205	0.0125	30	0.00090	NA	NA	NA	NA
120 Copper	2.6	0.000038	4.7	0.00029	3	0.00009	NA	NA	NA	NA
122 Lead	1.6	0.000023	*	<0.000001	1.6	0.000048	NA	NA	NA	NA
124 Nickel	23	0.00034	27	0.0016	21	0.00063	NA	NA	NA	NA
126 Silver	0.60	0.000009	0.43	0.00026	0.29	0.000009	NA	NA	NA	NA
128 Zinc	16	0.00023	133	1.08	2.8	0.000084	NA	NA	NA	NA

TABLE VII-1
OPERATING MODES, CONTROL AND TREATMENT
TECHNOLOGIES AND DISPOSAL METHODS
PAGE 5

D. Treatment Technology (cont.)

67.	AA1	Activated Alumina
68.	OZ	Ozonation
69.	UV	Ultraviolet Radiation
70.	CNTt,n	Central Treatment, where t = type n = process flow as % of total flow t: 1 = Same Subcats. 2 = Similar Subcats. 3 = Synergistic Subcats. 4 = Cooling Water 5 = Incompatible Subcats.
71.	On	Other, where n = Footnote number
72.	SB	Settling Basin
73.	AE	Aeration
74.	PS	Precipitation with Sulfide

TABLE VII-2
SUMMARY OF ANALYTICAL DATA FROM SAMPLED PLANTS
SULFURIC ACID PICKLING
GROSS RAW SPENT CONCENTRATES - CONCENTRATIONS AND LOADS
PAGE 2

Plant Code	Q-2		R-2		T-2		QQ-2		SS-2	
Reference No.	0894		0240B		0792B		0584E		0112A	
Sample Points	1		6		-		2		1	
Flow (gal/ton)	24.3		10.5		14.6		23.6		10.9	
Parameters	mg/l	lbs/ 1000 lbs	mg/l	lbs/ 1000 lbs	mg/l	lbs/ 1000 lbs	mg/l	lbs/ 1000 lbs	mg/l	lbs/ 1000 lbs
Dissolved Iron	61,900	6.27	67,800	2.97	34,000	2.07	48,300	4.75	48,000	2.18
Oil and Grease	14	0.0014	NA	NA	18	0.0011	8.5	0.00084	9.5	0.00043
Suspended Solids	1,420	0.144	70	0.0031	65	0.0040	128	0.0126	200	0.0091
pH, Units	<1.0		2.0		4.0		<1.0		<1.0	
115 Arsenic	NA	NA	NA	NA	NA	NA	NA	NA	NA	NA
118 Cadmium	NA	NA	NA	NA	NA	NA	NA	NA	NA	NA
119 Chromium	NA	NA	NA	NA	NA	NA	NA	NA	NA	NA
120 Copper	NA	NA	NA	NA	NA	NA	NA	NA	NA	NA
122 Lead	NA	NA	NA	NA	NA	NA	NA	NA	NA	NA
124 Nickel	NA	NA	NA	NA	NA	NA	NA	NA	NA	NA
126 Silver	NA	NA	NA	NA	NA	NA	NA	NA	NA	NA
128 Zinc	NA	NA	NA	NA	NA	NA	NA	NA	NA	NA

TABLE VII-2
SUMMARY OF ANALYTICAL DATA FROM SAMPLED PLANTS
SULFURIC ACID PICKLING
GROSS RAW SPENT CONCENTRATES - CONCENTRATIONS AND LOADS
PAGE 3

Plant Code	TT-2		WW-2		Average	
Reference No.	0856D		0868A			
Sample Points	4		2			
Flow (gal/ton)	23		44.7		17.4	
Parameters	mg/1	lbs/ 1000 lbs	mg/1	lbs/ 1000 lbs	mg/1	lbs/ 1000 lbs
Dissolved Iron	70,800	6.79	19,000	3.54	49,300	3.30
Oil and Grease	18.5	0.0018	10	0.0019	25	0.0017
Suspended Solids	222	0.0213	91	0.017	2,140	0.116
pH, Units	1.0		<1.0		<1.0-2.0	
115 Arsenic	NA	NA	NA	NA	0.18	0.000008
118 Cadmium	NA	NA	NA	NA	0.33	0.000012
119 Chromium	NA	NA	NA	NA	168	0.0058
120 Copper	NA	NA	NA	NA	3.43	0.000112
122 Lead	NA	NA	NA	NA	1.07	0.000020
124 Nickel	NA	NA	NA	NA	23.7	0.00086
126 Silver	NA	NA	NA	NA	0.44	0.00087
128 Zinc	NA	NA	NA	NA	50	0.36

ND: Not detected (included in average)
NA: Not analyzed
- : Net calculation yielded negative result (included in average)
* : Net calculation yielded concentration less than 0.010 mg/1 (included in average)

TABLE VII-3

SUMMARY OF ANALYTICAL DATA FROM SAMPLED PLANTS
HYDROCHLORIC ACID PICKLING
GROSS RAW SPENT CONCENTRATES - CONCENTRATIONS AND LOADS

Plant Code	091		095		099		100		AA-2		I-2	
Reference No.	0612		0584F		0528B		0384A		0384A		0856P	
Sample Points	L		B		B		K		3		8	
Flow (gal/ton)	18.1		49.7		81.7		4.6		3.3		220	
Parameters	mg/l	lbs/ 1000 lbs	mg/l	lbs/ 1000 lbs	mg/l	lbs/ 1000 lbs	mg/l	lbs/ 1000 lbs	mg/l	lbs/ 1000 lbs	mg/l	lbs/ 1000 lbs
Dissolved Iron	56,000	4.23	800	0.166	75,500	25.7	118,000	2.26	116,000	1.60	7.1	0.0065
Oil and Grease	4	0.0003	2.3	0.00048	11	0.0037	5.0	0.000096	0	0	NA	NA
Suspended Solids	3,026	0.2284	74	0.015	42	0.014	316	0.00606	0.021	0.00055	54	0.050
pH, Units	4.0		1.3-3.0		<1.0		<1.0		4.5-5.0		<1.0	
114 Antimony	NA	NA	0.18	0.000037	NA	NA	4.2	0.000081	NA	NA	NA	NA
115 Arsenic	NA	NA	0.022	0.000005	0.40	0.00014	NA	NA	NA	NA	NA	NA
118 Cadmium	0.28	0.000021	*	<0.000002	0.31	0.00011	0.28	<0.000001	NA	NA	NA	NA
119 Chromium	37	0.0028	1.00	0.000207	18	0.0061	8.5	0.00016	NA	NA	NA	NA
120 Copper	22	0.0017	2.42	0.000502	28	0.0095	11	0.00021	NA	NA	NA	NA
122 Lead	1,550	0.117	*	<0.000002	*	<0.000003	2.1	0.000040	NA	NA	NA	NA
124 Nickel	22	0.0017	1.66	0.000344	13	0.0044	13	0.00024	NA	NA	NA	NA
128 Zinc	60	0.0045	1.66	0.000344	4.2	0.0014	4.5	0.000086	NA	NA	NA	NA

TABLE VII-3
SUMMARY OF ANALYTICAL DATA FROM SAMPLED PLANTS
HYDROCHLORIC ACID PICKLING
GROSS RAW SPENT CONCENTRATES - CONCENTRATIONS AND LOADS
PAGE 2

Plant Code	U-2		V-2		W-2		Z-2		Average	
Reference No.	0484A		0936		-		0396D			
Sample Points	3		7+8		1		33			
Flow (gal/ton)	6.45		3.86		11.9		41.4		44.1	
Parameters	mg/l	lbs/ 1000 lbs	mg/l	lbs/ 1000 lbs	mg/l	lbs/ 1000 lbs	mg/l	lbs/ 1000 lbs	mg/l	lbs/ 1000 lbs
Dissolved Iron	77,000	2.07	107,000	1.72	138,000	6.85	44,300	7.65	73,230	5.23
Oil and Grease	NA	NA	NA	NA	5.1	0.00025	*	0.000002	3.9	0.00069
Suspended Solids	40	0.0011	140	0.0023	97	0.0048	120	0.021	395	0.0343
pH, Units	<1.0		<1.0		<1.0		<1.0		<1.0-5.0	
114 Antimony	NA	NA	NA	NA	NA	NA	NA	NA	2.19	0.000059
115 Arsenic	NA	NA	NA	NA	NA	NA	NA	NA	0.21	0.000073
118 Cadmium	NA	NA	NA	NA	NA	NA	NA	NA	0.22	0.000033
119 Chromium	NA	NA	NA	NA	NA	NA	NA	NA	16.1	0.0023
120 Copper	NA	NA	NA	NA	NA	NA	NA	NA	15.9	0.0030
122 Lead	NA	NA	NA	NA	NA	NA	NA	NA	388	0.029
124 Nickel	NA	NA	NA	NA	NA	NA	NA	NA	12.4	0.0017
128 Zinc	NA	NA	NA	NA	NA	NA	NA	NA	17.6	0.0016

ND: Not detected (included in average)
NA: Not analyzed
- : Calculation yielded negative result (included in average)
* : Calculation yielded concentration less than 0.010 mg/l (included in average)

TABLE VII-4

SUMMARY OF ANALYTICAL DATA FROM SAMPLED PLANTS
COMBINATION ACID PICKLING
GROSS RAW SPENT CONCENTRATES - CONCENTRATIONS AND LOADS

Plant Code	A		C		C		D		D		E	
Reference No.	0900		0424		0424		0248B		0248B		0020B	
Sample Points	12		11		12		14		13		14	
Flow (gal/ton)	NA		NA		NA		NA		NA		NA	
Parameters	mg/1	lbs/ 1000 lbs	mg/1	lbs/ 1000 lbs	mg/1	lbs/ 1000 lbs	mg/1	lbs/ 1000 lbs	mg/1	lbs/ 1000 lbs	mg/1	lbs/ 1000 lbs
Dissolved Iron	989	NA	13,200	NA	13,200	NA	74,700	NA	36,900	NA	15,700	NA
Oil and Grease	2.6	NA	0.2	NA	0.2	NA	2.2	NA	2.0	NA	0.4	NA
Suspended Solids	196	NA	224	NA	44	NA	318	NA	196	NA	114	NA
Fluoride	15,000	NA	1,700	NA	7	NA	2.5	NA	6.4	NA	18	NA
pH, Units	<1.0		1.2		<1.0		2.2		2.1		<1.0	
114 Antimony	NA	NA	NA	NA	NA	NA	NA	NA	NA	NA	NA	NA
118 Cadmium	0.050	NA	0.090	NA	0.12	NA	0.080	NA	0.070	NA	0.060	NA
119 Chromium	2,400	NA	2,090	NA	1,360	NA	6,242	NA	3,481	NA	2,426	NA
120 Copper	36	NA	114	NA	6.79	NA	80	NA	28	NA	78	NA
122 Lead	1.30	NA	*	NA	*	NA	1.4	NA	1.4	NA	5.7	NA
124 Nickel	2,300	NA	2,832	NA	1,786	NA	4,680	NA	1,952	NA	2,123	NA
128 Zinc	1.40	NA	0.97	NA	2.15	NA	6.4	NA	4.0	NA	1.6	NA

TABLE VII-4
SUMMARY OF ANALYTICAL DATA FROM SAMPLED PLANTS
COMBINATION ACID PICKLING
GROSS RAW SPENT CONCENTRATES - CONCENTRATIONS AND LOADS
PAGE 2

Plant Code	F		I		L		M		O		O	
Reference No.	0856H		0432K		0440A		0432J		0176		0176	
Sample Points	11		12		5		15		23		26	
Flow (gal/ton)	NA		4.2		NA		NA		NA		NA	
Parameters	mg/l	lbs/ 1000 lbs	mg/l	lbs/ 1000 lbs	mg/l	lbs/ 1000 lbs	mg/l	lbs/ 1000 lbs	mg/l	lbs/ 1000 lbs	mg/l	lbs/ 1000 lbs
Dissolved Iron	34,300	NA	20.6	0.000361	1.2	NA	NA	NA	16,200	NA	6,960	NA
Oil and Grease	NA	NA	7.1	0.000124	NA	NA	NA	NA	NA	NA	NA	NA
Suspended Solids	100	NA	109	0.00191	123	NA	60	NA	NA	NA	NA	NA
Fluoride	7,000	NA	2,600	0.0455	232	NA	17,000	NA	NA	NA	NA	NA
pH, Units	2.2		1.1		<1.0		1.2		2.0		<1.0	
114 Antimony	NA	NA	NA	NA	NA	NA	NA	NA	NA	NA	NA	NA
118 Cadmium	0.22	NA	0.10	**	NA	NA	0.32	NA	0.050	NA	0.020	NA
119 Chromium	6,800	NA	4,284	0.075	*	NA	6,720	NA	2,361	NA	1,248	NA
120 Copper	54	NA	37	0.00065	*	NA	640	NA	416	NA	16	NA
122 Lead	2.64	NA	NA	NA	*	NA	*	NA	1.2	NA	0.60	NA
124 Nickel	4,200	NA	2,031	0.0356	*	NA	5,980	NA	4,914	NA	3,822	NA
128 Zinc	85	NA	1.1	0.000019	*	NA	7.2	NA	0.7	NA	0.76	NA

TABLE VII-4
SUMMARY OF ANALYTICAL DATA FROM SAMPLED PLANTS
COMBINATION ACID PICKLING
GROSS RAW SPENT CONCENTRATES - CONCENTRATIONS AND LOADS
PAGE 3

Plant Code	S		T		U		Average	
Reference No.	0060I				0748			
Sample Points	7		9		2			
Flow (gal/ton)	NA		NA		NA		4.2	
Parameters	mg/1	lbs/ 1000 lbs	mg/1	lbs/ 1000 lbs	mg/1	lbs/ 1000 lbs	mg/1	lbs/ 1000 lbs
Dissolved Iron	8,240	NA	34,500	NA	30,400	NA	20,380	0.000361
Oil and Grease	NA	NA	NA	NA	NA	NA	2.1	0.000124
Suspended Solids	236	NA	NA	NA	16	NA	145	0.00191
Fluoride	380	NA	NA	NA	NA	NA	6,120	0.0455
pH, Units	4.0		<1.0		2.3		<1.0-2.3	
114 Antimony	NA	NA	NA	NA	NA	NA	NA	NA
118 Cadmium	0.17	NA	0.30	NA	0.35	NA	0.14	**
119 Chromium	1,424	NA	5,040	NA	7,000	NA	3,525	0.075
120 Copper	52	NA	632	NA	144	NA	167	0.00065
122 Lead	1.28	NA	7.1	NA	1.2	NA	2.0	NA
124 Nickel	1,552	NA	17,200	NA	9,040	NA	4,600	0.0356
128 Zinc	1.6	NA	32	NA	5.8	NA	10.8	0.000019

ND: Not detected (included in average)
NA: Not analyzed
- : Calculation yielded negative result (included in average)
* : Calculation yielded concentration less than 0.010 mg/l (included in average)
**: Calculation yielded a load <0.0000005 lbs/1000 lbs

TABLE VII-5

SUMMARY OF ANALYTICAL DATA FROM SAMPLED PLANTS
SULFURIC ACID PICKLING
GROSS RAW AND EFFLUENT RINSE WASTEWATERS - CONCENTRATIONS AND LOADS

Raw Wastewater														
Plant Code	090		091		094(A)		094(B)		096		097	
Reference No.	0476A		0612		0948C		0948C		0112I		0760	
Sample Points	C		F		C		D		D		B+C	
Flow (gal/ton)	91		122		303		422		604		11.6	
Parameters	mg/l	lbs/ 1000 lbs	mg/l	lbs/ 1000 lbs	mg/l	lbs/ 1000 lbs	mg/l	lbs/ 1000 lbs	mg/l	lbs/ 1000 lbs	mg/l	lbs/ 1000 lbs*
Dissolved Iron	395	0.150	2,350	1.20	40	0.051	98	0.17	97	0.24	4,860	0.24
Suspended Solids	10	0.0038	96	0.049	38	0.048	37	0.065	127	0.32	331	0.016
Oil and Grease	26	0.0099	18	0.0092	9	0.011	13	0.023	16	0.040	10	0.00048
pH, Units	1.7-2.5		1.8		3.2-5.7		2.2-2.3		3.2-3.7		NA	
115 Arsenic	NA	NA	NA	NA	0.01	0.000013	0.005	**	NA	NA	1.04	0.000050
118 Cadmium	NA	NA	0.02	0.000010	0.01	0.000013	<0.02	<0.000035	0.005	0.000013	0.042	**
119 Chromium	0.37	0.00014	3.8	0.0019	<0.03	<0.000038	0.05	0.000088	0.10	0.00025	2.87	0.00014
120 Copper	0.38	0.00014	0.63	0.00032	0.055	0.000069	0.14	0.00025	0.20	0.00050	10.1	0.00049
122 Lead	<0.10	<0.000040	0.20	0.00010	<0.05	<0.000063	<0.05	<0.000088	0.19	0.00048	0.24	0.000012
124 Nickel	0.44	0.00017	0.80	0.00041	0.03	0.000038	0.10	0.00018	0.09	0.00023	4.59	0.00022
126 Silver	<0.02	**	0.03	0.000015	<0.02	<0.000025	<0.02	<0.000035	<0.02	<0.000050	0.053	**
128 Zinc	59	0.022	26	0.013	0.04	0.000051	0.08	0.00014	15	0.038	0.24	0.000012

TABLE VII-5
SUMMARY OF ANALYTICAL DATA FROM SAMPLED PLANTS
SULFURIC ACID PICKLING
GROSS RAW AND EFFLUENT RINSE WASTEWATERS - CONCENTRATIONS AND LOADS
PAGE 2

Raw Wastewater

Plant Code	098		H-2		I-2(C)		I-2(D)		O-2		P-2	
Reference No.	0684D		0432A		0856P		0856P		0590		0312	
Sample Points	B		3+4		7		3		1		1	
Flow (gal/ton)	12.2		115		207		465		18.0		16.9	
Parameters	mg/l	lbs/ 1000 lbs	mg/l	lbs/ 1000 lbs	mg/l	lbs/ 1000 lbs	mg/l	lbs/ 1000 lbs	mg/l	lbs/ 1000 lbs	mg/l	lbs/ 1000 lbs
Dissolved Iron	3,100	0.16	49	0.023	347	0.30	36	0.070	43,000	3.23	6,467	0.46
Suspended Solids	32	0.0016	27	0.013	113	0.098	64	0.12	18	0.0014	755	0.053
Oil and Grease	4	0.0002	11	0.0053	4.3	0.0037	14.4	0.028	312	0.023	3.7	0.00026
pH, Units	1.8		NA		2.4-2.6		2.9-6.4		<1.0		1.3-1.6	
115 Arsenic	0.34	0.000017	NA	NA	NA	NA	NA	NA	NA	NA	NA	NA
118 Cadmium	0.14	**	NA	NA	NA	NA	NA	NA	NA	NA	NA	NA
119 Chromium	4.8	0.00024	NA	NA	NA	NA	NA	NA	NA	NA	NA	NA
120 Copper	4.1	0.00021	NA	NA	NA	NA	NA	NA	NA	NA	NA	NA
122 Lead	2.06	0.00010	NA	NA	NA	NA	NA	NA	NA	NA	NA	NA
124 Nickel	7.4	0.00038	NA	NA	NA	NA	NA	NA	NA	NA	NA	NA
126 Silver	0.03	**	NA	NA	NA	NA	NA	NA	NA	NA	NA	NA
128 Zinc	1.3	0.000066	NA	NA	NA	NA	NA	NA	NA	NA	NA	NA

TABLE VII-5
SUMMARY OF ANALYTICAL DATA FROM SAMPLED PLANTS
SULFURIC ACID PICKLING
GROSS RAW AND EFFLUENT RINSE WASTEWATERS - CONCENTRATIONS AND LOADS
PAGE 3

Raw Wastewater

Plant Code	Q-2		QQ-2		R		S-2		SS-2		T-2	
Reference No.	0894		0584E		0240A		0256G		0112A		0792B	
Sample Points	3		5		11		3		2		1	
Flow (gal/ton)	8.0		167		30		198		202		21.6	
Parameters	mg/1	lbs/ 1000 lbs	mg/1	lbs/ 1000 lbs	mg/1	lbs/ 1000 lbs	mg/1	lbs/ 1000 lbs	mgl/	lbs/ 1000 lbs	mg/1	lbs/lbs/ 1000 lbs
Dissolved Iron	3,500	0.12	83	0.058	8,992	1.12	2,623	2.16	63	0.053	1,833	0.17
Suspended Solids	20	0.00067	35	0.024	169	0.021	1,779	1.47	76	0.064	48.7	0.0044
Oil and Grease	0.6	0.000020	2	0.0014	1.8	0.00023	24	0.020	2	0.0017	4.3	0.00039
pH, Units	1.9		2.7		1.6		2.1-2.2		2		1.6	
115 Arsenic	NA	NA	NA	NA	NA	NA	NA	NA	NA	NA	NA	NA
118 Cadmium	NA	NA	NA	NA	NA	NA	NA	NA	NA	NA	NA	NA
119 Chromium	NA	NA	NA	NA	NA	NA	NA	NA	NA	NA	NA	NA
120 Copper	NA	NA	NA	NA	NA	NA	NA	NA	NA	NA	NA	NA
122 Lead	NA	NA	NA	NA	NA	NA	NA	NA	NA	NA	NA	NA
124 Nickel	NA	NA	NA	NA	NA	NA	NA	NA	NA	NA	NA	NA
126 Silver	NA	NA	NA	NA	NA	NA	NA	NA	NA	NA	NA	NA
128 Zinc	NA	NA	NA	NA	NA	NA	NA	NA	NA	NA	NA	NA

TABLE VII-5
SUMMARY OF ANALYTICAL DATA FROM SAMPLED PLANTS
SULFURIC ACID PICKLING
GROSS RAW AND EFFLUENT RINSE WASTEWATERS - CONCENTRATIONS AND LOADS
PAGE 4

Raw Wastewater

Plant Code	TT-2		WW-2		Average	
Reference No.	0856D		0868A			
Sample Points	1		1			
Flow (gal/ton)	134		284		172	
Parameters	mg/1	lbs/ 1000 lbs	mg/1	lbs/lbs/ 1000 lbs	mg/1	lbs/ 1000 lbs
Dissolved Iron	81.9	0.046	357	0.42	3,920	0.522
Suspended Solids	7.0	0.0039	6.1	0.0072	189	0.119
Oil and Grease	2.4	0.0013	1.6	0.0019	24	0.0090
pH, Units	1.8		1.7		<1.0-6.4	
115 Arsenic	NA	NA	NA	NA	0.35	0.000016
118 Cadmium	NA	NA	NA	NA	0.032	**
119 Chromium	NA	NA	NA	NA	6.4	0.00096
120 Copper	NA	NA	NA	NA	2.5	0.00031
122 Lead	NA	NA	NA	NA	0.47	0.00018
124 Nickel	NA	NA	NA	NA	2.5	0.00030
126 Silver	NA	NA	NA	NA	0.016	**
128 Zinc	NA	NA	NA	NA	12.8	0.0092

TABLE VII-5
SUMMARY OF ANALYTICAL DATA FROM SAMPLED PLANTS
SULFURIC ACID PICKLING
GROSS RAW AND EFFLUENT RINSE WASTEWATERS - CONCENTRATIONS AND LOADS
PAGE 5

Effluent

Treatment Tech.	E,AE,NL,CL,FLP		E,NL,CL,FP		E,SS,T,FLP,NL		E,SS,T,FLP,NL		AE,NL,CL,F	
Plant Code	090		091		094(A)		094(B)		096	
Reference No.	0476A		0612		0948C		0948C		0112I	
Sample Points	(C/E)G		(F/(B+C+D+E))H		(C/G)H		(D/G)H		(D/(F+B))H	
Streams Treated	Rinses		Rinses & Concentrates		Rinses		Rinses		Rinses	
Flow (gal/ton)	91		122		303		422		604	
Parameters	mg/l	lbs/ 1000 lbs*	mg/l	lbs/ 1000 lbs*	mg/l	lbs/ 1000 lbs*	mg/l	lbs/ 1000 lbs*	mg/l	lbs/ 1000 lbs*
Dissolved Iron	0.03	0.000073	0.36	0.00083	0.05	0.00039	0.05	0.0013	0.04	0.00025
Suspended Solids	4	0.000066	11	0.00064	6	0.00096	6	0.0013	<1	<0.0028
Oil and Grease	11	0.0041	4	0.0037	6	0.00041	6	0.00083	4	0.0026
pH, Units	6.6-9.0	-	8.3-8.5	-	7.6-7.8	-	7.6-7.8	-	7.3-7.7	-
115 Arsenic	NA	NA	NA	NA	<0.01	<0.000025	<0.01	<0.000018	NA	NA
118 Cadmium	<0.02	NA	0.02	0.000012	<0.02	<0.000013	<0.02	<0.000035	<0.01	<0.000013
119 Chromium	<0.03	<0.000035	0.02	0.000031	0.01	**	0.01	0.000001	<0.03	<0.000094
120 Copper	0.02	0.000019	0.03	0.000018	<0.02	<0.000011	<0.02	<0.000038	0.01	0.000051
122 Lead	<0.01	**	0.18	**	<0.05	<0.000063	<0.05	<0.000088	0.05	0.00019
124 Nickel	0.03	0.000036	0.02	0.000017	0.02	0.000013	0.02	0.000059	0.02	<0.000085
126 Silver	<0.02	**	0.02	0.000022	<0.02	0.000025	<0.02	0.000035	<0.02	<0.000050
128 Zinc	0.06	0.00032	0.12	0.000006	0.07	0.000020	0.07	0.000055	0.13	0.00049

TABLE VII-5
SUMMARY OF ANALYTICAL DATA FROM SAMPLED PLANTS
SULFURIC ACID PICKLING
GROSS RAW AND EFFLUENT RINSE WASTEWATERS - CONCENTRATIONS AND LOADS
PAGE 6

Effluent										
Treatment Tech.	Crystallization		-		FLL,NL,FLP,CL,T,VF		SL		SL	
Plant Code	097		098		H-2		I-2(C)		I-2(D)	
Reference No.	0760		0684D		0432A		0856P		0856P	
Sample Points	-		-		-		(7/(7+3+2+4))5		(3/(7+3+2+4))5	
Streams Treated	-		-		Rinses		Rinses		Rinses	
Flow (gal/ton)	-		-		115		207		465	
Parameters	mg/l	lbs/ 1000 lbs	mg/l	lbs/ 1000 lbs	mg/l	lbs/ 1000 lbs	mg/l	lbs/ 1000 lbs*	mg/l	lbs/ 1000 lbs*
Dissolved Iron	Acid rinses are used in ferrous sulfate crystal production with the aqueous wastewaters being discharged to a POTW facility.		No treatment on-site. Rinses are used as a makeup source. All wastewaters are hauled off-site.		Direct discharge to a terminal treatment facility. No samples were obtained from this source.		0.03	0.00010	0.03	0.000034
Suspended Solids							42	0.0016	42	0.0028
Oil and Grease							14.0	0.00042	14.0	0.0045
pH, Units							6.7	-	6.7	-
115 Arsenic							NA	NA	NA	NA
118 Cadmium							NA	NA	NA	NA
119 Chromium							NA	NA	NA	NA
120 Copper							NA	NA	NA	NA
122 Lead							NA	NA	NA	NA
124 Nickel							NA	NA	NA	NA
126 Silver							NA	NA	NA	NA
128 Zinc							NA	NA	NA	NA

TABLE VII-5
SUMMARY OF ANALYTICAL DATA FROM SAMPLED PLANTS
SULFURIC ACID PICKLING
GROSS RAW AND EFFLUENT RINSE WASTEWATERS - CONCENTRATIONS AND LOADS
PAGE 7

Effluent										
Treatment Tech.	AU		-		AU		CR,RR,EB,NL,CL,SL		SL,NL	
Plant Code	O-2		P-2		Q-2		QQ-2		R	
Reference No.	0590		0312		0894		0584E		0240A	
Sample Points	-		-		-		(5/(6+2))7		-	
Streams Treated	Rinses & Concentrates		Rinses		Rinses & Concentrates		Rinses & Concentrates		Rinses & Concentrates	
Flow (gal/ton)	0		-		0		176			
Parameters	mg/l	lbs/ 1000 lbs	mg/l	lbs/ 1000 lbs	mg/l	lbs/ 1000 lbs	mg/l	lbs/ 1000 lbs*	mg/l	lbs/ 1000 lbs
Dissolved Iron	Acid recovery produces a zero discharge condition.		No pretreatment. The wastewaters are directly discharged to a POTW facility.		Acid recovery produces a zero discharge condition.		0.04	-	Complete impoundment via lagoons	
Suspended Solids							1	0.00015		
Oil and Grease							3	0.000056		
pH, Units							7.5			
115 Arsenic							NA	NA		
118 Cadmium							NA	NA		
119 Chromium							NA	NA		
120 Copper							NA	NA		
122 Lead							NA	NA		
124 Nickel							NA	NA		
126 Silver							NA	NA		
128 Zinc							NA	NA		

TABLE VII-5
SUMMARY OF ANALYTICAL DATA FROM SAMPLED PLANTS
SULFURIC ACID PICKLING
GROSS RAW AND EFFLUENT RINSE WASTEWATERS - CONCENTRATIONS AND LOADS
PAGE 8

Effluents

Treatment Tech.	Recycle		NL,AE,FLP,T,SL,SS		AU		Evaporation Pond		FLP,FLA,NL,CL,SS,SL	
Plant Code	S-2		SS-2		T-2		TT-2		WW-2	
Reference No.	0256G		0112A		0792B		0856D		0868A	
Sample Points	-		(1/(1+2+7))9		-				(1/4)5	
Streams Treated	Rinses		Rinses & Scrubbers		Rinses		Rinses & Scrubbers		Rinses	
Flow (gal/ton)	0		202		0		134		284	
Parameters	mg/l	lbs/ 1000 lbs	mg/l	lbs/ 1000 lbs*	mg/l	lbs/ 1000 lbs	mg/l	lbs/ 1000 lbs	mg/l	lbs/ 1000 lbs*
Dissolved Iron	A complete recycle system produces a zero discharge condition.		0.04	0.0003	Acid recovery produces a zero discharge condition.		Direct discharge to a receiving stream.		0.17	0.0007
Suspended Solids			43	0.014					15	0.0006
Oil and Grease			6	0.00021					8.5	0.00007
pH, Units			7.7						8.0	
115 Arsenic			NA	NA					NA	NA
118 Cadmium			NA	NA					NA	NA
119 Chromium			NA	NA					NA	NA
120 Copper			NA	NA					NA	NA
122 Lead			NA	NA					NA	NA
124 Nickel			NA	NA					NA	NA
126 Silver			NA	NA					NA	NA
128 Zinc			NA	NA					NA	NA

ND : Not detected
NA : Not analyzed
(A): Sheet pickler
(B): Strip pickler
(C): #4 pickler
(D): #5 pickler
* : The lbs/1000 lbs value cannot be derived directly from the concentrations and flowrate shown. See Section VII text for further explanation.
** : Calculation yielded a load value <0.0000005 lbs/1000 lbs

TABLE VII-6

SUMMARY OF ANALYTICAL DATA FROM SAMPLED PLANTS
HYDROCHLORIC ACID PICKLING
GROSS RAW AND EFFLUENT RINSE WASTEWATERS - CONCENTRATIONS AND LOADS

Raw Wastewater

Plant Code	091		095		099		100(A)		100(B)	
Reference No.	0612		0584F		0528B		0384A		0384A	
Sample Points	B-G-F-L		G		C		C		H	
Flow (gal/ton)	328		16.9		45.4		289		3.3	
Parameters	mg/l	lbs/ 1000 lbs*	mg/l	lbs/ 1000 lbs	mg/l	lbs/ 1000 lbs	mg/l	lbs/ 1000 lbs	mg/l	lbs/ 1000 lbs
Dissolved Iron	-	-	2,087	0.1471	1,385	0.2622	35	0.042	2,185	0.03007
Oil and Grease	3.6	0.0049	3	0.0002	10	0.0019	8	0.0096	4.5	0.000062
Suspended Solids	130	0.178	68	0.0048	18.5	0.00350	54	0.065	113	0.00156
pH, Units	2.9-3.9		1.4-1.7		1.9-2.8		4.2		2.0-2.1	
114 Antimony	NA	NA	0.192	0.000014	NA	NA	<0.1	<0.0001	0.4	0.000006
115 Arsenic	NA	NA	0.23	0.000016	0.26	0.000049	NA	NA	NA	NA
118 Cadmium	-	-	<0.200	<0.000014	0.01	**	<0.01	<0.000012	0.02	**
119 Chromium	-	-	0.437	0.000031	0.35	0.000066	<0.03	<0.00004	0.56	0.000008
120 Copper	-	-	0.92	0.000065	0.61	0.000115	0.06	0.00007	1.55	0.000021
122 Lead	1.53	0.00209	<0.60	<0.000042	<0.10	<0.000019	<0.05	<0.00006	0.07	0.000001
124 Nickel	-	-	0.73	0.000051	0.64	0.00012	<0.02	<0.00002	1.25	0.000017
128 Zinc	181	0.248	0.607	0.000043	0.14	0.000027	0.14	0.00017	0.38	0.000005

TABLE VII-6
SUMMARY OF ANALYTICAL DATA FROM SAMPLED PLANTS
HYDROCHLORIC ACID PICKLING
GROSS RAW AND EFFLUENT RINSE WASTEWATERS - CONCENTRATIONS AND LOADS
PAGE 2

Raw Wastewater

Plant Code	AA-2		BB-2		I-2		U-2		V-2	
Reference No.	0384A		0060		0856P		0480A		0936	
Sample Points	2		5		4		1		1+6	
Flow (gal/ton)	5.85		211		220		92.9		167.2	
Parameters	mg/l	lbs/ 1000 lbs	mg/l	lbs/ 1000 lbs	mg/l	lbs/ 1000 lbs	mg/l	lbs/ 1000 lbs	mg/l	lbs/ 1000 lbs*
Dissolved Iron	13,700	0.334	1,100	0.97	7.1	0.0065	190	0.0736	290	0.202
Oil and Grease	43	0.0010	59	0.052	3.9	0.0036	5.3	0.0021	3.2	0.0022
Suspended Solids	20	0.00049	37	0.033	96	0.088	13	0.0050	5.5	0.0038
pH, Units	1.1		1.5-1.7		4.5-5.0		1.8		2.5	
114 Antimony	NA	NA	NA	NA	NA	NA	NA	NA	NA	NA
115 Arsenic	NA	NA	NA	NA	NA	NA	NA	NA	NA	NA
118 Cadmium	NA	NA	NA	NA	NA	NA	NA	NA	NA	NA
119 Chromium	NA	NA	NA	NA	NA	NA	NA	NA	NA	NA
120 Copper	NA	NA	NA	NA	NA	NA	NA	NA	NA	NA
122 Lead	NA	NA	NA	NA	NA	NA	NA	NA	NA	NA
124 Nickel	NA	NA	NA	NA	NA	NA	NA	NA	NA	NA
128 Zinc	NA	NA	NA	NA	NA	NA	NA	NA	NA	NA

TABLE VII-6
SUMMARY OF ANALYTICAL DATA FROM SAMPLED PLANTS
HYDROCHLORIC ACID PICKLING
GROSS RAW AND EFFLUENT RINSE WASTEWATERS - CONCENTRATIONS AND LOADS
PAGE 3

Raw Wastewater

Plant Code	W-2		X-2		Y-2		Average	
Reference No.	-		0060B		-			
Sample Points	7		3		5			
Flow (gal/ton)	227.5		663		87.3		181	
Parameters	mg/l	lbs/ 1000 lbs	mg/l	lbs/ 1000 lbs	mg/l	lbs/lbs/ 1000 lbs	mg/l	lbs/ 1000 lbs
Dissolved Iron	83	0.079	193	0.0534	307	0.112	1,659	0.214
Oil and Grease	5.6	0.0053	<0.1	<0.0003	3	0.001	11.7	0.0065
Suspended Solids	20	0.019	9	0.02	6.3	0.0023	45	0.032
pH, Units	2.9-3.8		2.2-2.6		1.7		1.1-5.0	
114 Antimony	NA	NA	NA	NA	NA	NA	0.20	0.000007
115 Arsenic	NA	NA	NA	NA	NA	NA	0.25	0.000032
118 Cadmium	NA	NA	NA	NA	NA	NA	0.01	**
119 Chromium	NA	NA	NA	NA	NA	NA	0.27	0.000021
120 Copper	NA	NA	NA	NA	NA	NA	0.63	0.000055
122 Lead	NA	NA	NA	NA	NA	NA	0.32	0.000419
124 Nickel	NA	NA	NA	NA	NA	NA	0.52	0.000038
128 Zinc	NA	NA	NA	NA	NA	NA	36.5	0.0496

TABLE VII-6
SUMMARY OF ANALYTICAL DATA FROM SAMPLED PLANTS
HYDROCHLORIC ACID PICKLING
GROSS RAW AND EFFLUENT RINSE WASTEWATERS - CONCENTRATIONS AND LOADS
PAGE 4

Effluent

Treatment Tech.	NL,FDS,VF,CL		-		AR,NL,SL		CL		DW	
Plant Code	091		095		099		100(A)		100(B)	
Reference No.	0612		0584F		0528B		0384A		0384A	
Sample Points	((B-G-F)/(B+E+C+D))H				((C+F/(C+E+D+H))G		(C/G)I		-	
Streams Treated	Rinses & Concentrates		-		Rinses		Rinses		Rinses	
Flow (gal/ton)	328		24.7		45.4		289		3.3	
Parameters	mg/l	lbs/ 1000 lbs*	mg/l	lbs/ 1000 lbs	mg/l	lbs/ 1000 lbs*	mg/l	lbs/ 1000 lbs*	mg/l	lbs/ 1000 lbs
Dissolved Iron	0.36	0.00040	Wastewaters are		19	0.00012	15.6	0.135	Wastewaters are	
Oil and Grease	4	0.0082	discharged to		16	0.00012	3	0.00059	disposed of via	
Suspended Solids	11	0.012	waste lagoons		11	0.00043	20	0.016	deep well injec-	
pH, Units	8.3-8.5		without treatment.		6.9-7.1		8.0-8.3		tion.	
114 Antimony	NA	NA			NA	NA	<0.10	<0.00012		
115 Arsenic	NA	NA			<0.01	0.000009	NA	NA		
118 Cadmium	-	-			<0.01	**	0.00	**		
119 Chromium	0.02	-			<0.03	0.000003	<0.03	<0.000036		
120 Copper	0.03	0.000072			0.02	0.000004	<0.02	<0.000071		
122 Lead	0.18	0.0010			<0.1	**	<0.05	<0.00059		
124 Nickel	0.02	0.000056			0.02	0.000006	0.03	<0.000018		
128 Zinc	0.12	0.00045			0.01	**	0.02	0.000067		

TABLE VII-6
SUMMARY OF ANALYTICAL DATA FROM SAMPLED PLANTS
HYDROCHLORIC ACID PICKLING
GROSS RAW AND EFFLUENT RINSE WASTEWATERS - CONCENTRATIONS AND LOADS
PAGE 5

Effluent

Treatment Tech.	None		AE,FLP,CL,VF,E		SL		Neut. w/Soda Ash		AE,NC	
Plant Code	AA-2		BB-2		I-2		U-2		V-2	
Reference No.	0384A		0060		0856P		0480A		0936	
Sample Points	None		7		(4/(2+4+3+7))5		-		4	
Streams Treated	None		Rinses		Rinses		Rinses		Rinses	
Flow (gal/ton)	5.85		211		220		92.9		167.2	
Parameters	mg/l	lbs/ 1000 lbs	mg/l	lbs/ 1000 lbs	mg/l	lbs/ 1000 lbs*	mg/l	lbs/ 1000 lbs	mg/l	lbs/ 1000 lbs
Dissolved Iron	Wastewater is		0.04	0.000036	0.03	0.000002	0.50	0.00020	261	0.50
Oil and Grease	disposed of via		6	0.0054	14.0	0.00041	5	0.00194	13	0.025
Suspended Solids	deep well injection.		2	0.0018	42	0.0014	385	0.149	195	0.37
pH, Units			7.7		6.7		8.5		3.4-4.5	
114 Antimony			NA	NA	NA	NA	NA	NA	NA	NA
115 Arsenic			NA	NA	NA	NA	NA	NA	NA	NA
118 Cadmium			NA	NA	NA	NA	NA	NA	NA	NA
119 Chromium			NA	NA	NA	NA	NA	NA	NA	NA
120 Copper			NA	NA	NA	NA	NA	NA	NA	NA
122 Lead			NA	NA	NA	NA	NA	NA	NA	NA
124 Nickel			NA	NA	NA	NA	NA	NA	NA	NA
128 Zinc			NA	NA	NA	NA	NA	NA	NA	NA

TABLE VII-6
SUMMARY OF ANALYTICAL DATA FROM SAMPLED PLANTS
HYDROCHLORIC ACID PICKLING
GROSS RAW AND EFFLUENT RINSE WASTEWATERS - CONCENTRATIONS AND LOADS
PAGE 6

Effluents						
Treatment Tech.	None		None		None	
Plant Code	W-2		X-2		Y-2	
Reference No.	-		0060B		-	
Sample Points	None		None		None	
Streams Treated	None		None		None	
Flow (gal/ton)	228		663		87.3	
Parameters	mg/l	lbs/ 1000 lbs	mg/l	lbs/ 1000 lbs	mg/l	lbs/ 1000 lbs
Dissolved Iron	Wastewater is discharged to a POTW without pretreatment.		Wastewater is directly discharged without treatment.		Wastewater is dis- to a POTW without pretreatment.	
Oil and Grease						
Suspended Solids						
pH, Units						
114 Antimony						
115 Arsenic						
118 Cadmium						
119 Chromium						
120 Copper						
122 Lead						
124 Nickel						
128 Zinc						

ND: Not detected (included in average)
NA: Not analyzed
- : Calculation yielded negative result (included in average)
* : The lbs/1000 lbs value cannot be derived directly from the concentrations and flowrate shown. See the Section VII text for further explanation.
**: Calculation yielded a load <0.0000005 lbs/1000 lbs (included in average)

TABLE VII-7

SUMMARY OF ANALYTICAL DATA FROM SAMPLED PLANTS
COMBINATION ACID PICKLING
GROSS RAW RINSE WASTEWATERS - CONCENTRATIONS AND LOADS

Raw Wastewaters

Plant Code	121		123		124		125		C		D	
Reference No.	0900		0088A		0088D		0884E		0424		0248D	
Sample Points	B		D		B		C		2		4	
Flow (gal/ton)	2754		310		***		650		91		1016	
Parameters	mg/l	lbs/1000 lbs	mg/l	lbs/1000 lbs	mg/l	lbs/1000 lbs	mg/l	lbs/1000 lbs	mg/l	lbs/1000 lbs	mg/l	lbs/1000 lbs
Dissolved Iron	148	1.70	46	0.059	10	***	5	0.014	216	0.082	104	0.44
Oil & Grease	6	0.069	5	0.0065	10	***	6	0.016	5.0	0.0019	2.2	0.0093
Suspended Solids	14	0.16	36	0.047	2	***	2	0.0054	106	0.040	36	0.15
pH	2.4-2.7		2.6-2.7		2.7		3.5-3.6		1.9-3.4		3.8	
Fluoride	180	2.07	NA	NA	25	***	52	0.146	636	0.241	77	0.325
114 Antimony	0.069	0.00079	NA	NA	NA	NA	NA	NA	NA	NA	NA	NA
118 Cadmium	<0.02	<0.00023	<0.01	<0.000013	<0.01	***	<0.01	<0.000028	0.008	**	<0.004	<0.000017
119 Chromium	33.3	0.38	3.2	0.0041	6.2	***	1.1	0.0030	137	0.052	16	0.068
120 Copper	0.59	0.0068	0.26	0.00034	0.01	***	0.08	0.00022	9.5	0.0036	0.11	0.00047
122 Lead	<0.60	<0.0069	<0.10	<0.00013	<0.05	***	<0.05	<0.00014	<0.03	<0.000011	NA	NA
124 Nickel	20	0.23	7.6	0.0098	27	***	0.56	0.0015	241	0.091	9.2	0.039
128 Zinc	0.110	0.0013	0.08	0.00010	0.05	***	<0.02	<0.000054	0.87	0.00033	0.16	0.00068

Effluents

Treatment Tech.	E,CL,CR		E,NL,FLP,CL		E,NC,FDSP		E,NL,FLP,PSP		E,NL,PSP		None	
Plant Code	121		123		124		125		C		D	
Reference No.	0900		0088A		0088D		0884E		0424		0248B	
Sample Points	C		(D/(F+G+H))I		C		(C/(C+F+D))E		4		None	
Streams Treated	Rinses, FS, Conc.		Rinses, Conc.		Rinses		Rinses, FS, Conc.		Rinses		None	
Flow (gal/ton)	2754		310*		***		650*		91		1016	
Parameters	mg/l	lbs/1000 lbs	mg/l	lbs/1000 lbs	mg/l	lbs/1000 lbs	mg/l	lbs/1000 lbs	mg/l	lbs/1000 lbs	mg/l	lbs/1000 lbs
Dissolved Iron	0.26	0.0014	0.44	0.00069	0.02	***	0.04	0.00013	8.46	0.0032	Discharged directly to a receiving stream	
Oil & Grease	4	0.022	9	0.00067	5	***	24	0.044	0.3	0.00011		
Suspended Solids	8	0.045	29	0.0063	64	***	527	0.53	31	0.012		
pH	7.8-8.0		7.5-8.3		11.6-12.1		11.9		2.7-7.2			
Fluoride	9.5	0.053	NA	NA	10.4	***	95	0.26	133	0.050		
114 Antimony	0.10	0.00056	NA	NA	NA	***	NA	NA	NA	NA		
118 Cadmium	<0.020	<0.00011	<0.01	0.00	<0.01	***	0.01	0.00	<0.004	**		
119 Chromium	0.90	0.0050	0.35	0.00013	1.9	***	10.6	0.035	1.32	0.00050		
120 Copper	0.074	0.00041	0.02	0.000013	0.03	***	0.18	0.00045	0.08	0.000030		
122 Lead	<0.060	<0.00034	<0.10	0.00	<0.05	***	0.12	0.00	<0.030	<0.000011		
124 Nickel	0.37	0.0021	0.32	0.00078	7.5	***	6.8	0.022	2.49	0.00094		
128 Zinc	0.07	0.00039	0.11	0.0000062	0.49	***	0.14	<0.00038	0.035	0.000013		

TABLE VII-7
SUMMARY OF ANALYTICAL DATA FROM SAMPLED PLANTS
COMBINATION ACID PICKLING
GROSS RAW RINSE WASTEWATERS - CONCENTRATIONS AND LOADS
PAGE 2

Raw Wastewaters

Plant Code	F		I		L		O		U		Average	
Reference No.	0856H		0432K		0440A		0176		0748			
Sample Points	1		4		10		29		1			
Flow (gal/ton)	279		1814		140		2927		677		1066	
Parameters	mg/l	lbs/1000 lbs	mg/l	lbs/1000 lbs	mg/l	lbs/1000 lbs	mg/l	lbs/1000 lbs	mg/l	lbs/1000 lbs	mg/l	lbs/1000 lbs
Dissolved Iron	61	0.071	61.5	0.47	135	0.079	1.79	0.022	1080	3.05	170	0.60
Oil & Grease	0.7	0.00081	0.7	0.0053	1.9	0.0011	9.9	0.12	3.0	0.0085	4.6	0.024
Suspended Solids	7	0.0081	562	4.25	179	0.10	80	0.98	4	0.011	93	0.58
pH	2.6-2.9		3.2-7.2		2.8-3.0		5.4-8.2		1.9		1.9-8.2	
Fluoride	174	0.203	33.3	0.25	1.4	0.00081	16	0.19	500	1.41	169	0.537
114 Antimony	NA	NA	NA	NA	NA	NA	NA	NA	NA	NA	0.069	0.00079
118 Cadmium	<0.004	**	<0.004	<0.000030	<0.004	**	<0.004	<0.000048	0.012	0.000034	0.002	**
119 Chromium	13.4	0.016	17.1	0.13	24.4	0.014	0.48	0.0059	152	0.43	37	0.11
120 Copper	0.06	0.000070	0.15	0.0011	0.80	0.00047	0.06	0.00073	1.38	0.0039	1.2	0.0018
122 Lead	<0.03	<0.000035	NA	NA	<0.03	<0.000018	<0.03	<0.00036	<0.03	<0.000086	0.00	**
124 Nickel	9.4	0.011	6.0	0.045	12.5	0.0073	2.14	0.026	70	0.20	37	0.066
128 Zinc	0.07	0.000081	0.75	0.0057	0.08	0.000047	0.10	0.0012	5.6	0.016	0.7	0.0025

Effluents

Treatment Tech.	E,NL,SL		NL,SL		NW		E,NL,FLP,CL,T		NL,SL	
Plant Code	F		I		L		O		U	
Reference No.	0856H		0432K		0440A		0176		0748	
Sample Points	(1/(1+2))4		(4/(4+7))5		(10/(7+8+9+10+13+14+15))1		(29/(18+20+16))19		4	
Streams Treated	Rinses, FS		Rinses		Rinses		Rinses		Rinses	
Flow (gal/ton)	279	*	1814	*	140	*	2927	*	677	
Parameters	mg/l	lbs/1000 lbs	mg/l	lbs/1000 lbs	mg/l	lbs/1000 lbs	mg/l	lbs/1000 lbs	mg/l	lbs/1000 lbs
Dissolved Iron	41.14	0.046	24.2	0.19	0.06	0.00022	0.20	0.0015	0.02	0.000056
Oil & Grease	1.6	0.0017	1.5	0.012	3	0.0074	0.50	0.0090	1.0	0.0028
Suspended Solids	430	0.42	132	0.72	119	0.11	21	0.039	12	0.034
pH	3.2-8.4		3.7-6.6		7.7-7.9		7.3-9.6		10.4	
Fluoride	68.7	0.050	9.1	0.069	1.4	0.000086	18.9	0.00037	12	0.034
114 Antimony	NA	NA	NA	NA	NA	NA	NA	NA	NA	NA
118 Cadmium	NA	NA	<0.004	<0.000030	<0.004	**	<0.004	**	<0.004	<0.000011
119 Chromium	7.43	0.0086	1.76	0.014	0.61	0.00079	2.66	0.0029	0.4	0.00011
120 Copper	0.07	0.000076	-	-	0.01	0.000005	0.11	0.00034	0.03	0.000085
122 Lead	<0.030	**	NA	NA	<0.03	**	<0.030	0.00	<0.030	<0.000085
124 Nickel	6.7	0.0076	5.22	0.041	0.16	0.00015	1.18	0.069	0.01	0.000028
128 Zinc	0.14	0.00013	0.24	0.0019	0.01	0.000035	0.05	0.0013	0.03	0.000085

ND : Not detected (included in average)
NA : Not analyzed
- : Calculation yielded negative result (included in average)
* : The lbs/1000 lbs value cannot be derived directly from the concentrations and flowrate shown. See the Section VII text for further explanation.
** : Calculation yielded load less than 0.0000005 lbs/1000 lbs
***: Confidential data (not included in average)

TABLE VII-8

SUMMARY OF ANALYTICAL DATA FROM SAMPLED PLANTS
ACID PICKLING
GROSS RAW AND EFFLUENT FUME SCRUBBER WASTEWATERS - CONCENTRATIONS AND LOADS

Raw Wastewater

Plant Code	099		100		F		SS-2	
Reference No.	0528B		0384A		0856H		0112A	
Sample Points	F		J		2		3+4+5	
Flow (gal/ton)	6.1		3.4		50.4		22.6	
Parameters	mg/l	lbs/ 1000 lbs	mg/l	lbs/ 1000 lbs	mg/l	lbs/ 1000 lbs	mg/l	lbs/ 1000 lbs*
Dissolved Iron	45	0.0011	3,210	0.0455	46.4	0.0098	0.55	0.000052
Oil and Grease	14	0.00036	3	0.000043	0.8	0.00017	2.0	0.00019
Suspended Solids	22	0.00056	28	0.00040	25	0.0053	7.5	0.00071
Fluoride	NA	NA	NA	NA	1,803	0.379	NA	NA
pH, Units	<1		1.0-1.2		1.8		1.9	
114 Antimony	NA	NA	0.6	**	NA	NA	NA	NA
115 Arsenic	0.08	**	NA	NA	NA	NA	NA	NA
118 Cadmium	<0.01	**	0.02	**	NA	NA	NA	NA
119 Chromium	0.08	**	0.72	0.000010	2.43	0.00051	NA	NA
120 Copper	0.10	**	1.7	0.000024	0.08	0.000017	NA	NA
122 Lead	<0.10	**	0.08	**	<0.03	**	NA	NA
124 Nickel	0.04	**	1.4	0.000020	3.3	0.00069	NA	NA
128 Zinc	0.11	**	0.44	**	0.32	0.000067	NA	NA

TABLE VII-8
SUMMARY OF ANALYTICAL DATA FROM SAMPLED PLANTS
ACID PICKLING
GROSS RAW AND EFFLUENT FUME SCRUBBER WASTEWATERS - CONCENTRATIONS AND LOADS
PAGE 2

Raw Wastewater

Plant Code	W-2		Y-2		Average	
Reference No.	-		-			
Sample Points	6		4			
Flow (gal/ton)	45.5		39.7		28.0	
Parameters	mg/1	lbs/ 1000 lbs	mg/1	lbs/ 1000 lbs	mg/1	lbs/ 1000 lbs
Dissolved Iron	23.6	0.0045	3.8	0.00063	555	0.0103
Oil and Grease	6.2	0.0012	1.7	0.00028	4.6	0.00037
Suspended Solids	4.3	0.00082	7	0.0012	15.6	0.00150
Fluoride	NA	NA	NA	NA	1,803	0.379
pH, Units	2.8-3.0		1.8-1.9		<1-3.0	
114 Antimony	NA	NA	NA	NA	0.6	**
115 Arsenic	NA	NA	NA	NA	0.08	**
118 Cadmium	NA	NA	NA	NA	0.01	**
119 Chromium	NA	NA	NA	NA	1.08	0.00017
120 Copper	NA	NA	NA	NA	0.63	0.000014
122 Lead	NA	NA	NA	NA	0.03	**
124 Nickel	NA	NA	NA	NA	1.58	0.00024
128 Zinc	NA	NA	NA	NA	0.29	0.000022

TABLE VII-8
SUMMARY OF ANALYTICAL DATA FROM SAMPLED PLANTS
ACID PICKLING
GROSS RAW AND EFFLUENT FUME SCRUBBER WASTEWATERS - CONCENTRATIONS AND LOADS
PAGE 3

Effluent

Treatment Tech.	NL,SL		DW		E,NL,SL		NL,AE,FLP,T,SL,SS		-		-	
Plant Code	099		100		F		SS-2		W-2		Y-2	
Reference No.	0528B		0384A		0856H		0112A		-		-	
Sample Points	(F/(C+D+E+H))G		-		(2/(1+2))4		((3+4+5)/8)9		6		4	
Streams Treated	FS		FS		FS		FS		FS		FS	
Flow (gal/ton)	6.1		3.4		50.4		22.6		45.5		39.7	
Parameters	mg/l	lbs/ 1000 lbs*	mg/l	lbs/ 1000 lbs	mg/l	lbs/ 1000 lbs*	mg/l	lbs/ 1000 lbs*	mg/l	lbs/ 1000 lbs	mg/l	lbs/ 1000 lbs
Dissolved Iron	0.19	**	Wastewaters are disposed of via deep well injection.		41.14	0.0070	0.04	NA	Wastewaters are disposed of via a POTW facility.		Wastewaters are disposed of via a POTW facility.	
Oil and Grease	16	0.000024			1.6	0.00038	43	NA				
Suspended Solids	11	0.000080			430	0.22	6	NA				
Fluoride	NA	NA			68.7	5.53	NA	NA				
pH, Units	6.9-7.1				3.2-8.4		7.7					
114 Antimony	NA	NA			NA	NA	NA	NA				
115 Arsenic	<0.01	**			NA	NA	NA	NA				
118 Cadmium	*	**			NA	NA	NA	NA				
119 Chromium	<0.03	**			7.34	0.00033	NA	NA				
120 Copper	0.02	**			0.07	0.000019	NA	NA				
122 Lead	<0.10	**			<0.10	**	NA	NA				
124 Nickel	0.02	**			6.7	0.00057	NA	NA				
128 Zinc	0.01	**			0.14	0.000082	NA	NA				

ND: Not detected
NA: Not analyzed
* : The lbs/1000 lbs value cannot be derived directly from the concentrations and flowrate shown. See the Section VII text for further explanation.
**: Calculated load <0.0000005 lbs/1000 lbs

TABLE VII-9

SUMMARY OF ANALYTICAL DATA FROM SAMPLED PLANTS
HYDROCHLORIC ACID PICKLING
GROSS RAW AND EFFLUENT ABSORBER VENT SCRUBBER WASTEWATERS - CONCENTRATIONS AND LOADS

Raw Wastewater

Plant Code	095		099		W-2		X-2	
Reference No.	0584F		0528B		-		0060B	
Sample Points	C		E		5		2	
Flow (gal/ton)	69		170		98.6		200	
Parameters	mg/1	lbs/ 1000 lbs	mg/1	lbs/ 1000 lbs	mg/1	lbs/ 1000 lbs	mg/1	lbs/ 1000 lbs
Dissolved Iron	3,663	1.054	150	0.106	15	0.0062	63.6	0.053
Oil and Grease	3	0.00086	7	0.0050	7.6	0.0031	1.3	0.0011
Suspended Solids	194	0.056	67	0.047	136	0.056	90	0.075
pH, Units	1.7-2.1		2.3-7.5		3.7-7.6		1.7	
114 Antimony	0.22	0.000063	NA	NA	NA	NA	NA	NA
115 Arsenic	0.022	**	<0.01	**	NA	NA	NA	NA
118 Cadmium	<0.2	<0.000059	<0.01	**	NA	NA	NA	NA
119 Chromium	0.58	0.00017	1.0	0.00071	NA	NA	NA	NA
120 Copper	1.67	0.00048	0.45	0.00032	NA	NA	NA	NA
122 Lead	<0.6	<0.00017	<0.10	<0.000072	<0.05	<0.000020	NA	NA
124 Nickel	0.79	0.00023	0.60	0.00043	NA	NA	NA	NA
128 Zinc	1.28	0.00037	0.36	0.00026	NA	NA	NA	NA

TABLE VII-9
SUMMARY OF ANALYTICAL DATA FROM SAMPLED PLANTS
HYDROCHLORIC ACID PICKLING
GROSS RAW AND EFFLUENT ABSORBER VENT SCRUBBER WASTEWATERS - CONCENTRATIONS AND LOADS
PAGE 2

Raw Wastewater

Plant Code	Y-2(A)		Y-2(B)		Average	
Reference No.	-		-			
Sample Points	1		2			
Flow (gal/ton)	288		336		195	
Parameters	mg/l	lbs/ 1000 lbs	mg/l	lbs/ 1000 lbs	mg/l	lbs/ 1000 lbs
Dissolved Iron	<0.02	<0.000024	0.53	0.00074	650	0.203
Oil and Grease	4	0.0048	3	0.0042	4.3	0.0032
Suspended Solids	90	0.11	6.5	0.0091	97.3	0.059
pH, Units	7.0-7.1		1.7		1.7-7.6	
114 Antimony	NA	NA	NA	NA	0.22	0.000063
115 Arsenic	NA	NA	NA	NA	0.011	**
118 Cadmium	NA	NA	NA	NA	0.00	0.00000
119 Chromium	NA	NA	NA	NA	0.79	0.00044
120 Copper	NA	NA	NA	NA	1.06	0.00040
122 Lead	NA	NA	NA	NA	0.00	0.00000
124 Nickel	NA	NA	NA	NA	0.70	0.00033
128 Zinc	NA	NA	NA	NA	0.82	0.00032

ND : Not detected
NA : Not analyzed
** : Calculation yielded a load <0.0000005 lbs/1000 lbs
- : Calculation yielded a negative value
(A): Acid regeneration unit with cyclone
(B): Acid regeneration unit with electrostatic precipitators

TABLE VII-10

NET CONCENTRATION AND LOAD ANALYSIS
SULFURIC ACID PICKLING OPERATIONS

Make-up Water → [Sulfuric Acid Pickling Process, Model Size: 800 TPD] → Raw Wastewater

330 GPT x 800 TPD = 264,000 GPD

750 GPT x 800 TPD = 600,000 GPD

Regulated Pollutants	Make-up Conc. (mg/l) Min.	Make-up Conc. (mg/l) Max.	Make-up Conc. (mg/l) Avg.	Make-up Avg. Load (lbs/day)	Raw Waste Avg. Conc. (mg/l)	Raw Waste Avg. Load (lbs/day)	Make-up as a % of Raw Waste Load
Oil & Grease	1.0	8.0	4.0	8.81	12	60.05	14.67
Total Suspended Solids	<1.0	196	29	63.85	158	790.6	8.08
122 Lead	<0.020	0.28	0.028	0.062	0.23	1.15	5.39
128 Zinc	<0.020	1.8	0.27	0.59	6.6	33.03	1.79

TABLE VII-11

NET CONCENTRATION AND LOAD ANALYSIS
HYDROCHLORIC ACID PICKLING OPERATIONS

Make-up Water ——> [Hydrochloric Acid Pickling Process, Model Size: 3,050 TPD] ——> Raw Wastewater

490 GPT x 3,050 TPD = 1,494,500 GPD

1,250 GPT x 3,050 TPD = 3,812,500 GPD

Regulated Pollutants	Make-up Conc. (mg/1) Min.	Make-up Conc. (mg/1) Max.	Make-up Conc. (mg/1) Avg.	Make-up Avg. Load (lbs/day)	Raw Waste Avg. Conc. (mg/1)	Raw Waste Avg. Load (lbs/day)	Make-up as a % of Raw Waste Load
Oil & Grease	<1.0	11	4.9	61.07	11	349.8	17.46
Total Suspended Solids	6.0	196	57	710.5	43	1,367	51.96
122 Lead	<0.050	0.080	0.010	0.12	8.3	263.9	0.045
128 Zinc	<0.020	0.14	0.060	0.75	22	699.5	0.11

TABLE VII-12

NET CONCENTRATION AND LOAD ANALYSIS
COMBINATION ACID PICKLING OPERATIONS

Make-up Water ——> [Combination Acid Pickling Process, Model Size: 280 TPD] ——> Raw Wastewater

960 GPT x 280 TPD = 268,800 GPD

2,440 GPT x 280 TPD = 683,200 GPD

Regulated Pollutants	Make-up Conc. (mg/1) Min.	Make-up Conc. (mg/1) Max.	Make-up Conc. (mg/1) Avg.	Make-up Avg. Load (lbs/day)	Raw Waste Avg. Conc. (mg/1)	Raw Waste Avg. Load (lbs/day)	Make-up as a % of Raw Waste Load
Oil & Grease	2.0	13	4.1	9.19	10	56.98	16.13
Total Suspended Solids	<1.0	27	7.4	16.59	47	267.8	6.19
119 Chromium	<0.030	<0.030	<0.030	0.00	51	290.6	0.00
124 Nickel	<0.020	0.030	0.010	0.022	62	353.3	0.006

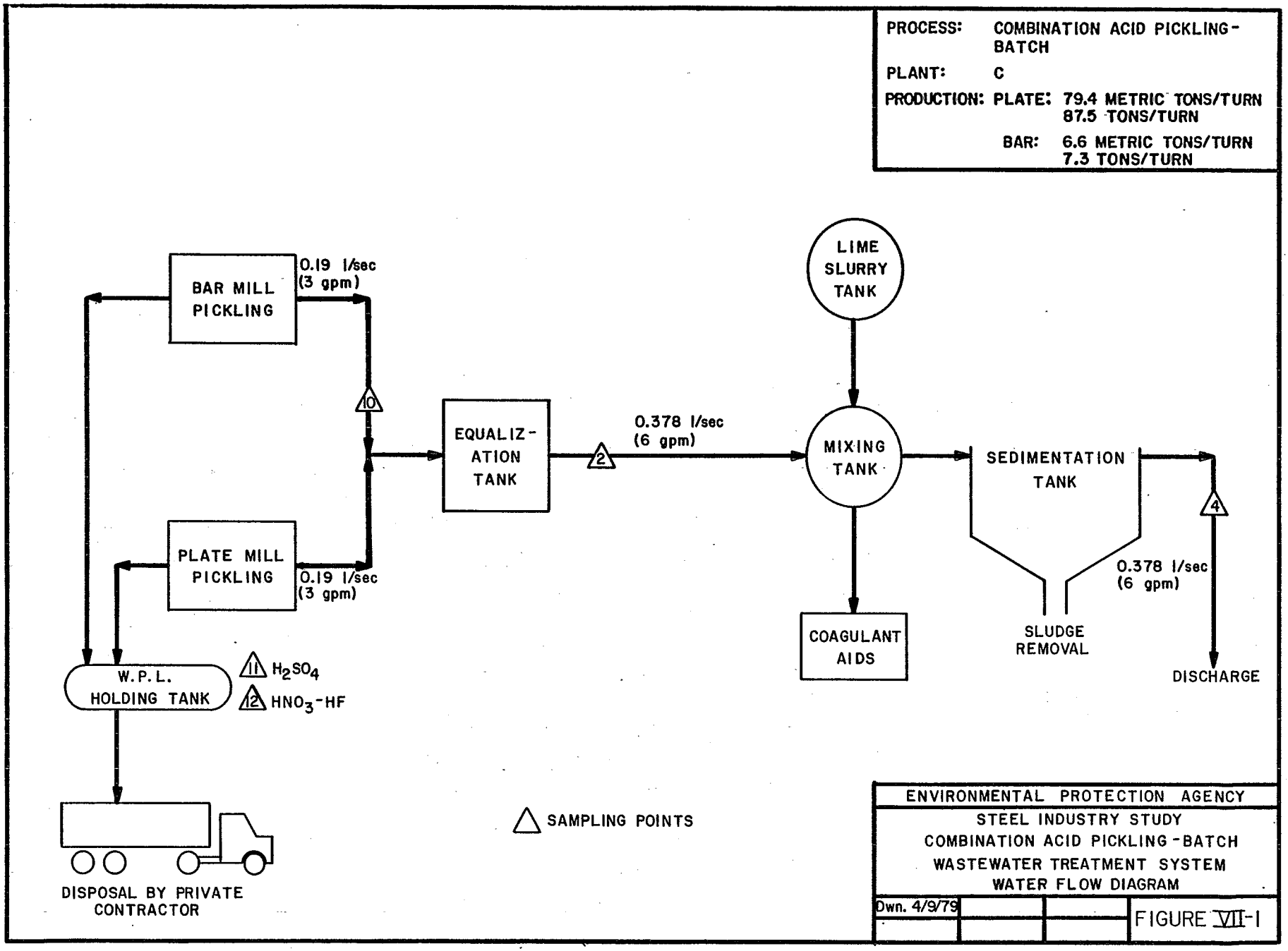
PROCESS: COMBINATION ACID PICKLING-BATCH
PLANT: C
PRODUCTION: PLATE: 79.4 METRIC TONS/TURN
87.5 TONS/TURN
BAR: 6.6 METRIC TONS/TURN
7.3 TONS/TURN
BAR MILL PICKLING
0.19 l/sec (3 gpm)
10
PLATE MILL PICKLING
0.19 l/sec (3 gpm)
EQUALIZ-ATION TANK
2
0.378 l/sec (6 gpm)
LIME SLURRY TANK
MIXING TANK
COAGULANT AIDS
SEDIMENTATION TANK
SLUDGE REMOVAL
4
0.378 l/sec (6 gpm)
DISCHARGE
W.P.L. HOLDING TANK
11 H_2SO_4
12 HNO_3-HF
DISPOSAL BY PRIVATE CONTRACTOR
SAMPLING POINTS
ENVIRONMENTAL PROTECTION AGENCY
STEEL INDUSTRY STUDY
COMBINATION ACID PICKLING-BATCH
WASTEWATER TREATMENT SYSTEM
WATER FLOW DIAGRAM
Dwn. 4/9/79
FIGURE VII-1

PROCESS: COMBINATION ACID PICKLING - CONTINUOUS

PLANT: D

PRODUCTION:

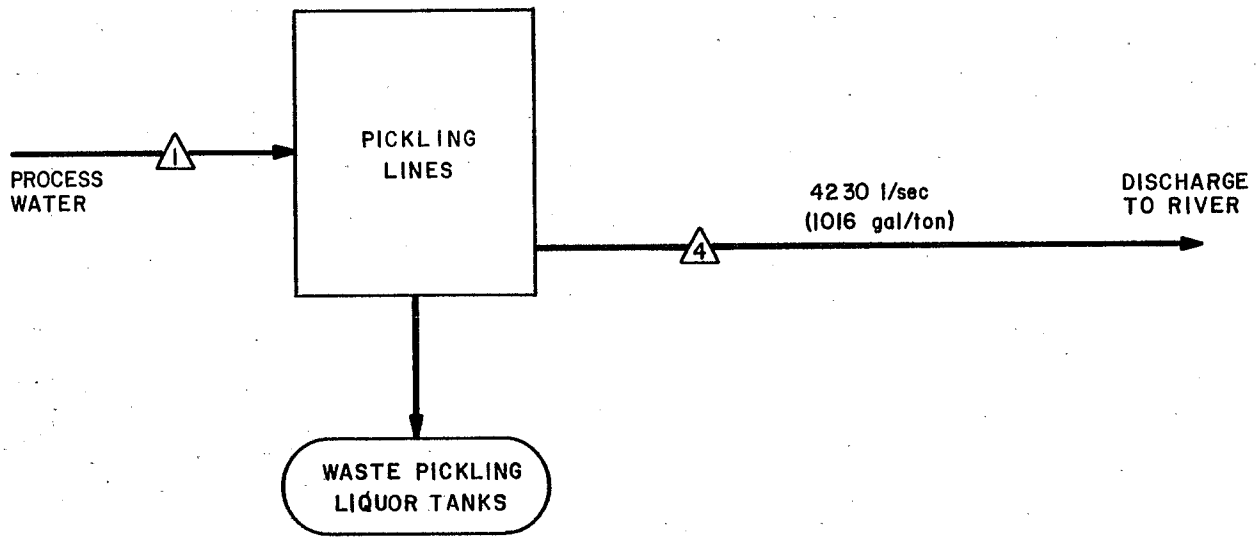

ENVIRONMENTAL PROTECTION AGENCY

STEEL INDUSTRY STUDY
COMBINATION ACID PICKLING-CONTINUOUS
WASTEWATER TREATMENT SYSTEM
WATER FLOW DIAGRAM

Dwn. 4/9/79

FIGURE VII-2

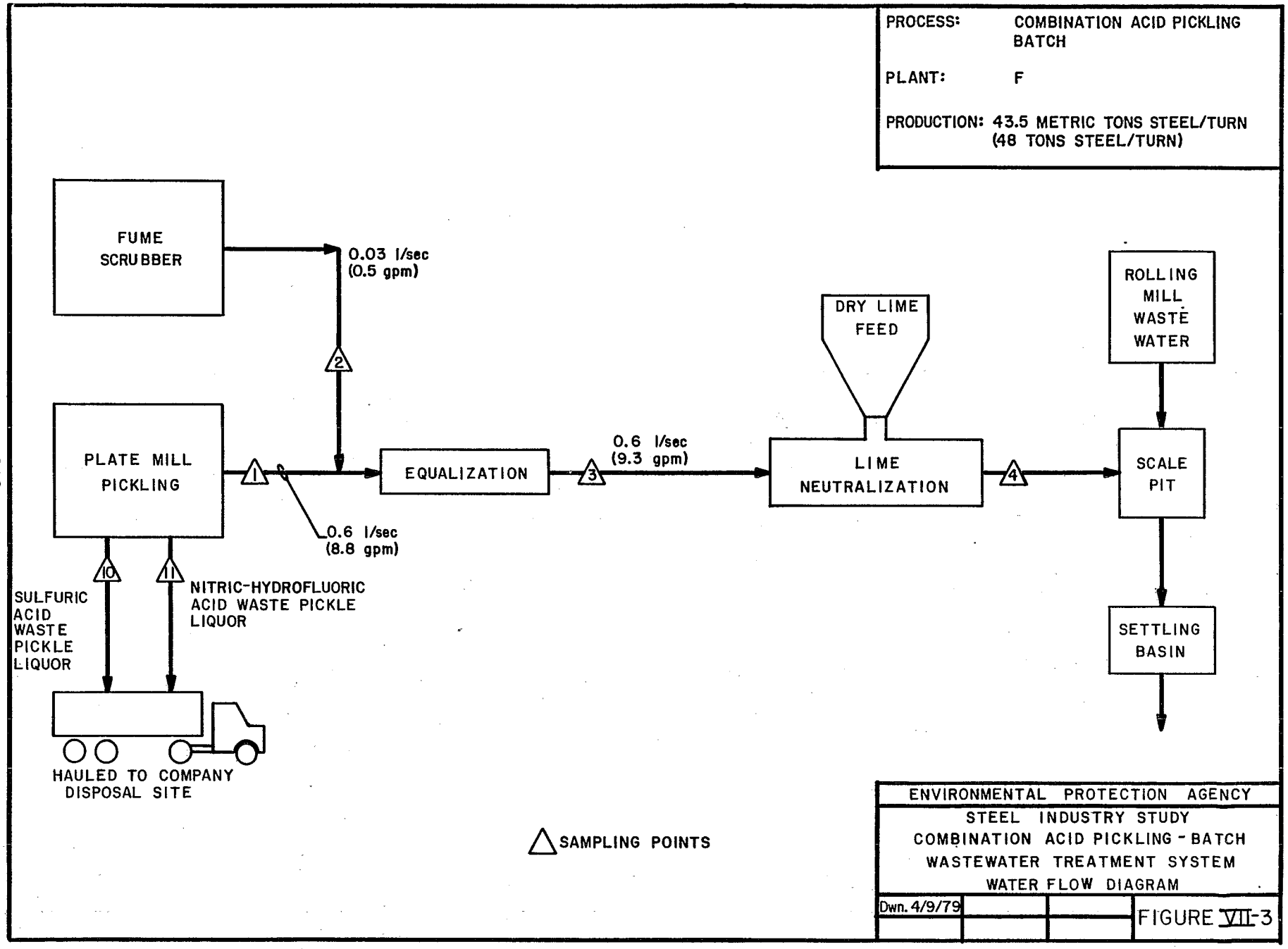
PROCESS: COMBINATION ACID PICKLING BATCH
PLANT: F
PRODUCTION: 43.5 METRIC TONS STEEL/TURN (48 TONS STEEL/TURN)
FUME SCRUBBER
0.03 l/sec (0.5 gpm)
2
PLATE MILL PICKLING
1
0.6 l/sec (8.8 gpm)
EQUALIZATION
3
0.6 l/sec (9.3 gpm)
DRY LIME FEED
LIME NEUTRALIZATION
4
ROLLING MILL WASTE WATER
SCALE PIT
SETTLING BASIN
10
11
SULFURIC ACID WASTE PICKLE LIQUOR
NITRIC-HYDROFLUORIC ACID WASTE PICKLE LIQUOR
HAULED TO COMPANY DISPOSAL SITE
SAMPLING POINTS
ENVIRONMENTAL PROTECTION AGENCY
STEEL INDUSTRY STUDY
COMBINATION ACID PICKLING - BATCH
WASTEWATER TREATMENT SYSTEM
WATER FLOW DIAGRAM
Dwn. 4/9/79
FIGURE VII-3

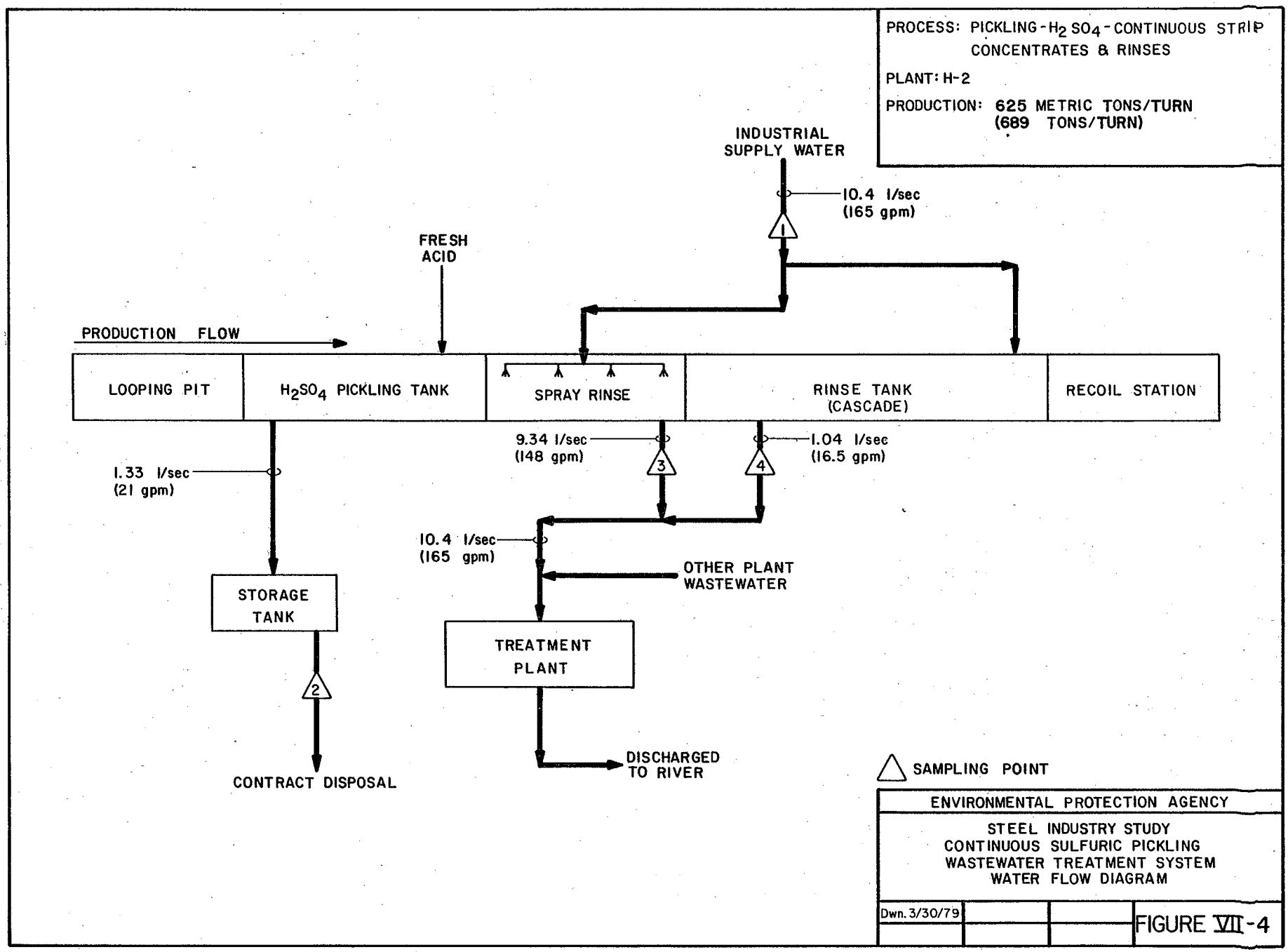
PROCESS: PICKLING-H_2SO_4-CONTINUOUS STRIP CONCENTRATES & RINSES
PLANT: H-2
PRODUCTION: 625 METRIC TONS/TURN (689 TONS/TURN)
INDUSTRIAL SUPPLY WATER
10.4 l/sec (165 gpm)
1
FRESH ACID
PRODUCTION FLOW
LOOPING PIT
H_2SO_4 PICKLING TANK
SPRAY RINSE
RINSE TANK (CASCADE)
RECOIL STATION
9.34 l/sec (148 gpm)
3
1.04 l/sec (16.5 gpm)
4
1.33 l/sec (21 gpm)
10.4 l/sec (165 gpm)
OTHER PLANT WASTEWATER
STORAGE TANK
TREATMENT PLANT
2
CONTRACT DISPOSAL
DISCHARGED TO RIVER
SAMPLING POINT
ENVIRONMENTAL PROTECTION AGENCY
STEEL INDUSTRY STUDY
CONTINUOUS SULFURIC PICKLING
WASTEWATER TREATMENT SYSTEM
WATER FLOW DIAGRAM
Dwn. 3/30/79
FIGURE VII-4

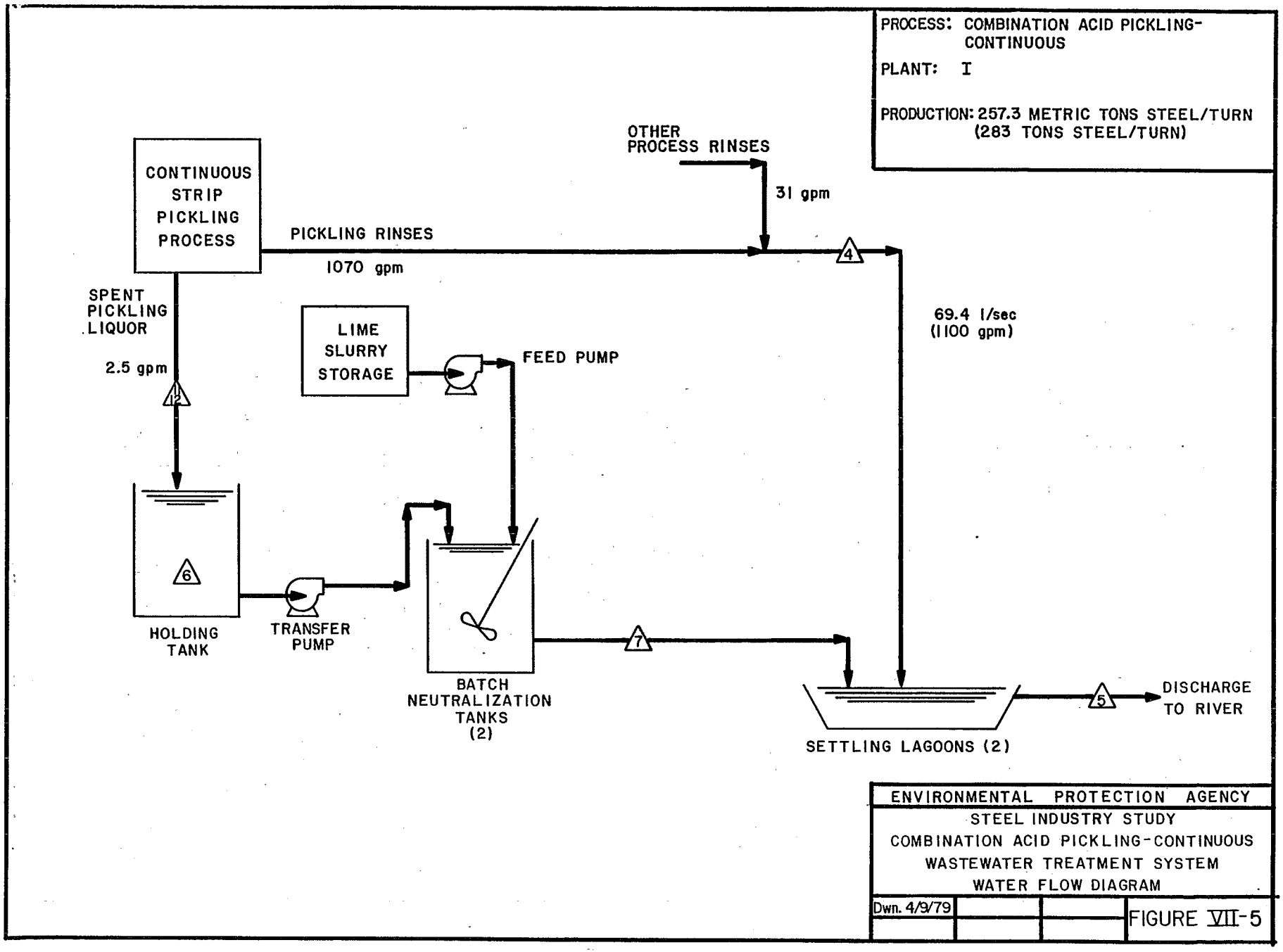
PROCESS: COMBINATION ACID PICKLING-CONTINUOUS
PLANT: I
PRODUCTION: 257.3 METRIC TONS STEEL/TURN (283 TONS STEEL/TURN)
CONTINUOUS STRIP PICKLING PROCESS
PICKLING RINSES
1070 gpm
OTHER PROCESS RINSES
31 gpm
4
69.4 l/sec (1100 gpm)
SPENT PICKLING LIQUOR
2.5 gpm
12
LIME SLURRY STORAGE
FEED PUMP
6
HOLDING TANK
TRANSFER PUMP
BATCH NEUTRALIZATION TANKS (2)
7
SETTLING LAGOONS (2)
5
DISCHARGE TO RIVER
ENVIRONMENTAL PROTECTION AGENCY
STEEL INDUSTRY STUDY
COMBINATION ACID PICKLING-CONTINUOUS
WASTEWATER TREATMENT SYSTEM
WATER FLOW DIAGRAM
Dwn. 4/9/79
FIGURE VII-5

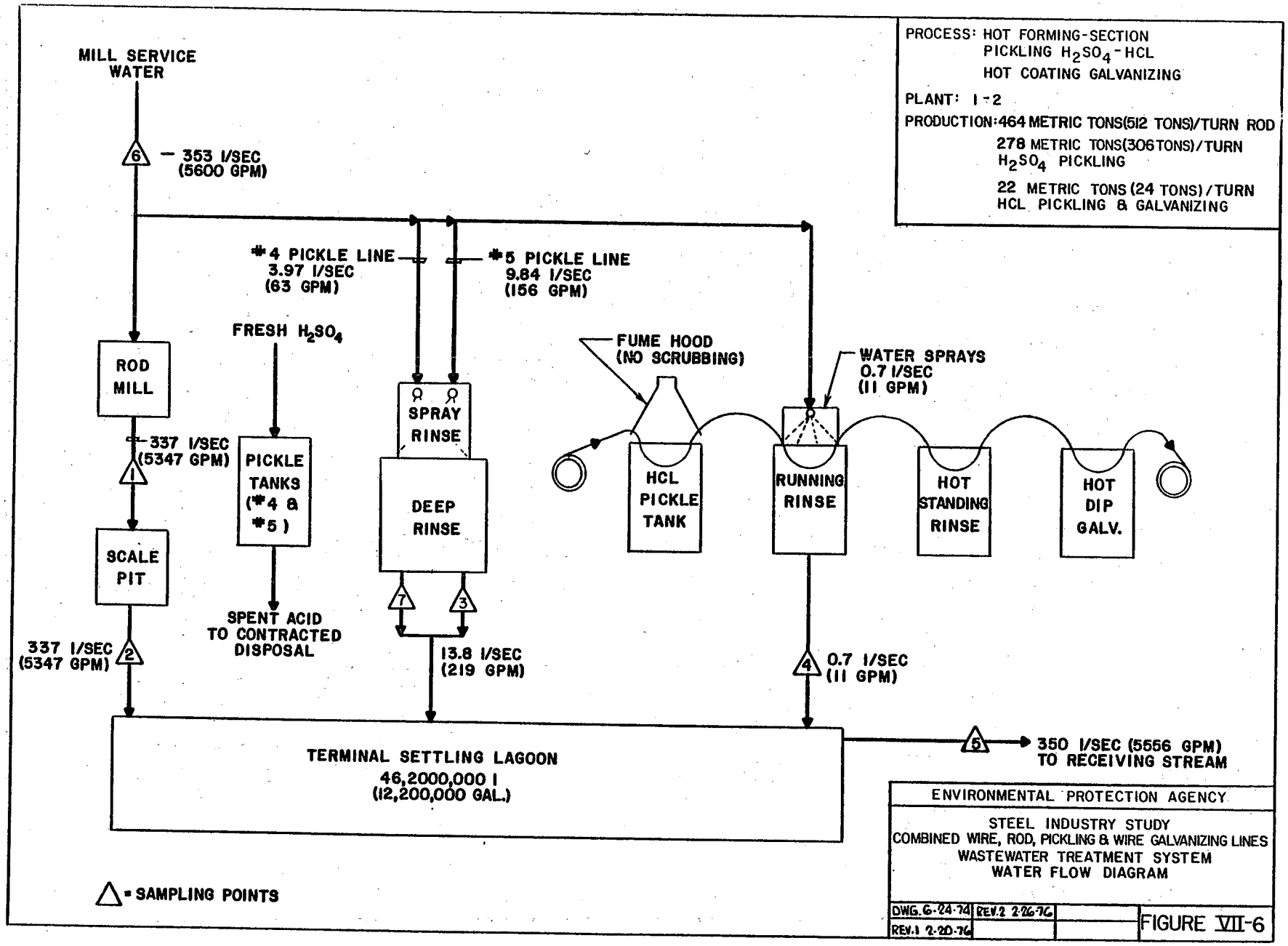
PROCESS: HOT FORMING-SECTION
PICKLING H_2SO_4-HCL
HOT COATING GALVANIZING
PLANT: 1-2
PRODUCTION: 464 METRIC TONS (512 TONS)/TURN ROD
278 METRIC TONS (306 TONS)/TURN H_2SO_4 PICKLING
22 METRIC TONS (24 TONS)/TURN HCL PICKLING & GALVANIZING
MILL SERVICE WATER
6
353 l/SEC (5600 GPM)
#4 PICKLE LINE 3.97 l/SEC (63 GPM)
#5 PICKLE LINE 9.84 l/SEC (156 GPM)
FRESH H_2SO_4
FUME HOOD (NO SCRUBBING)
WATER SPRAYS 0.7 l/SEC (11 GPM)
ROD MILL
337 l/SEC (5347 GPM)
1
SCALE PIT
PICKLE TANKS (#4 & #5)
SPENT ACID TO CONTRACTED DISPOSAL
SPRAY RINSE
DEEP RINSE
7
3
HCL PICKLE TANK
RUNNING RINSE
HOT STANDING RINSE
HOT DIP GALV.
337 l/SEC (5347 GPM)
2
13.8 l/SEC (219 GPM)
4
0.7 l/SEC (11 GPM)
TERMINAL SETTLING LAGOON
46,2000,000 l
(12,200,000 GAL.)
5
350 l/SEC (5556 GPM) TO RECEIVING STREAM
△ = SAMPLING POINTS
ENVIRONMENTAL PROTECTION AGENCY
STEEL INDUSTRY STUDY
COMBINED WIRE, ROD, PICKLING & WIRE GALVANIZING LINES
WASTEWATER TREATMENT SYSTEM
WATER FLOW DIAGRAM
DWG. 6-24-74
REV. 2 2-26-76
REV. 1 2-20-76
FIGURE VII-6

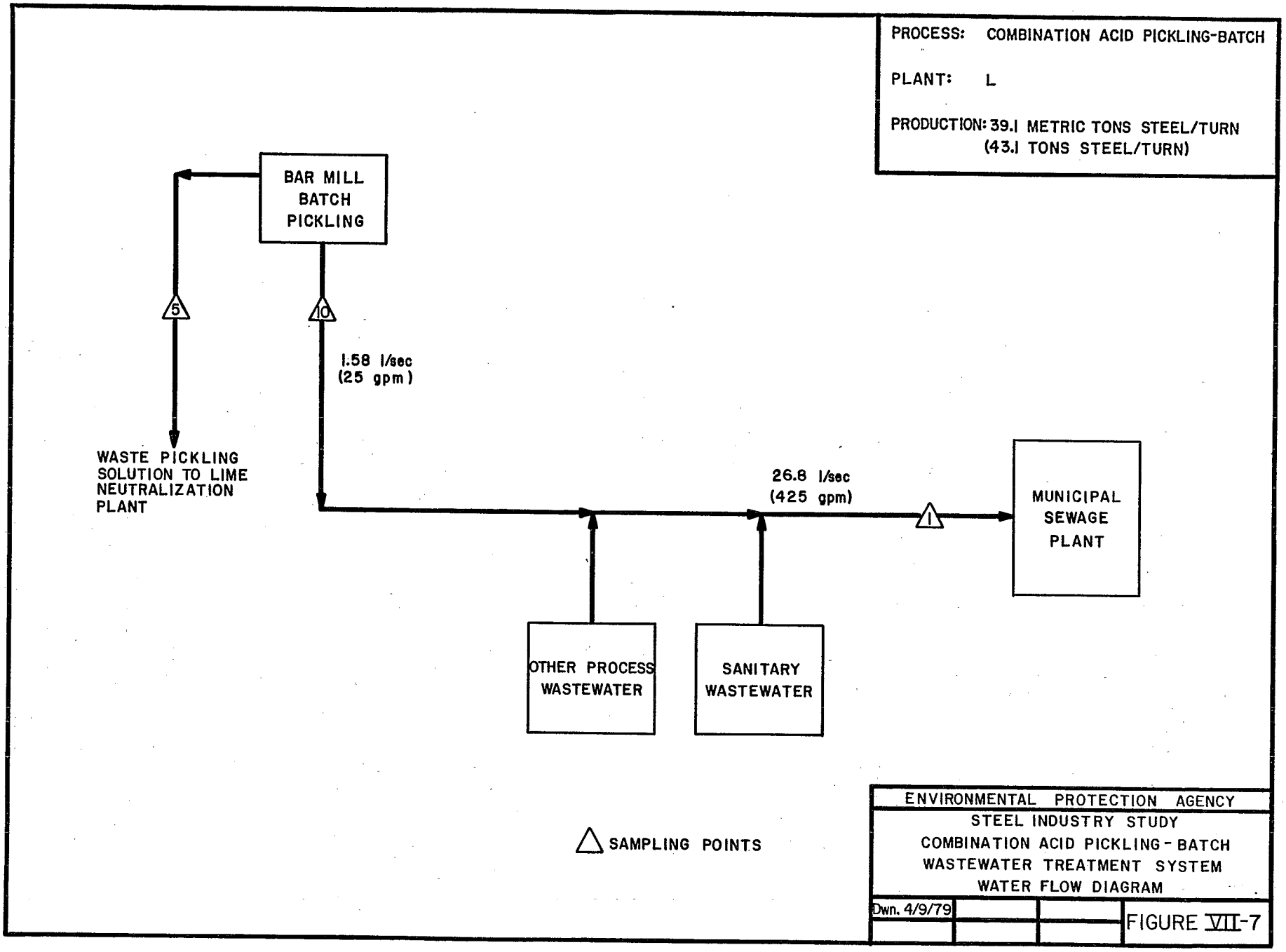
PROCESS: COMBINATION ACID PICKLING-BATCH
PLANT: L
PRODUCTION: 39.1 METRIC TONS STEEL/TURN
(43.1 TONS STEEL/TURN)
BAR MILL BATCH PICKLING
5
10
1.58 l/sec
(25 gpm)
WASTE PICKLING SOLUTION TO LIME NEUTRALIZATION PLANT
26.8 l/sec
(425 gpm)
1
MUNICIPAL SEWAGE PLANT
OTHER PROCESS WASTEWATER
SANITARY WASTEWATER
SAMPLING POINTS
ENVIRONMENTAL PROTECTION AGENCY
STEEL INDUSTRY STUDY
COMBINATION ACID PICKLING - BATCH
WASTEWATER TREATMENT SYSTEM
WATER FLOW DIAGRAM
Dwn. 4/9/79
FIGURE VII-7

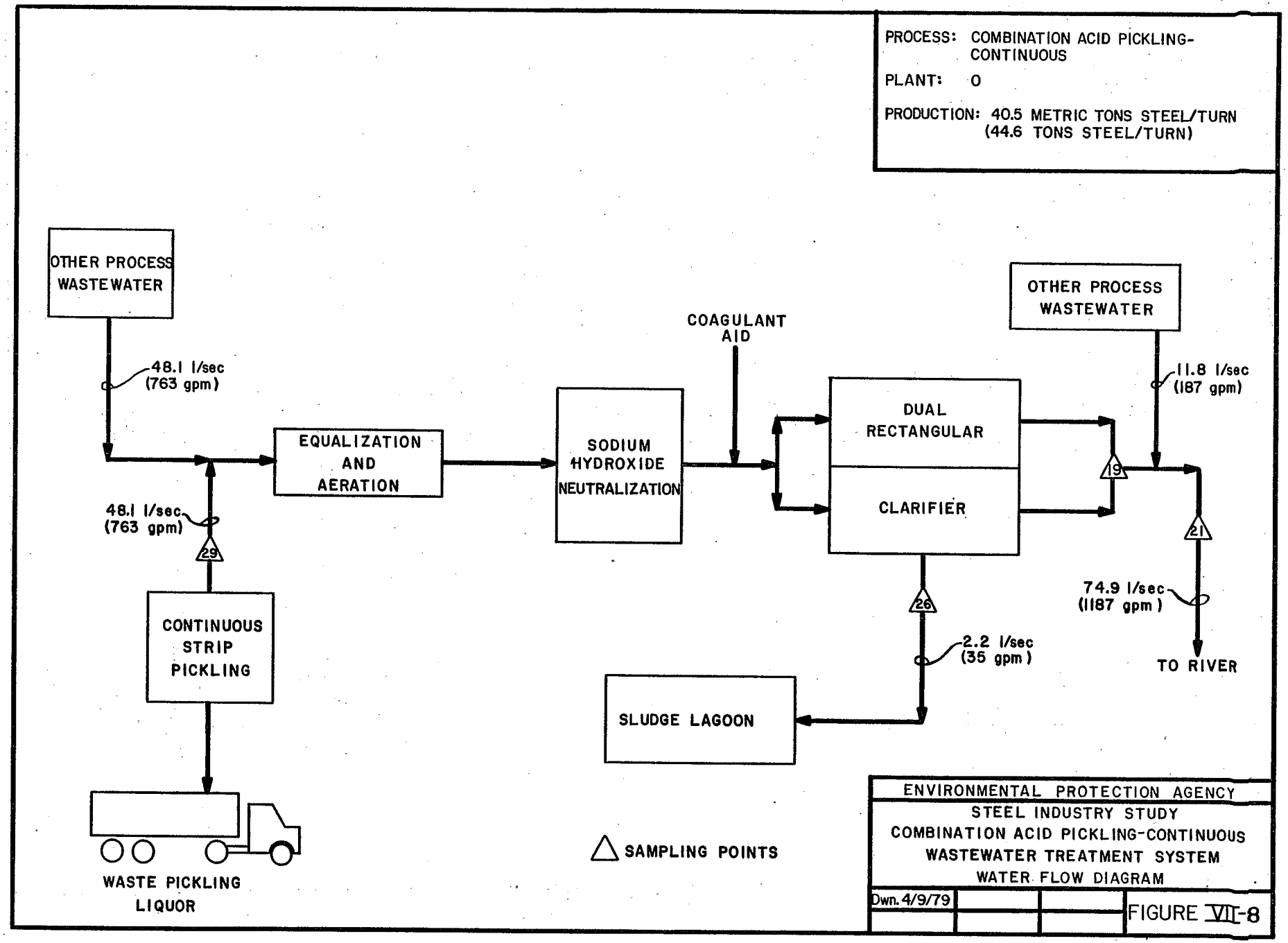
PROCESS: COMBINATION ACID PICKLING-CONTINUOUS
PLANT: O
PRODUCTION: 40.5 METRIC TONS STEEL/TURN (44.6 TONS STEEL/TURN)
OTHER PROCESS WASTEWATER
48.1 l/sec (763 gpm)
EQUALIZATION AND AERATION
SODIUM HYDROXIDE NEUTRALIZATION
COAGULANT AID
DUAL RECTANGULAR
CLARIFIER
OTHER PROCESS WASTEWATER
11.8 l/sec (187 gpm)
19
21
74.9 l/sec (1187 gpm)
TO RIVER
48.1 l/sec (763 gpm)
29
CONTINUOUS STRIP PICKLING
26
2.2 l/sec (35 gpm)
SLUDGE LAGOON
WASTE PICKLING LIQUOR
SAMPLING POINTS
ENVIRONMENTAL PROTECTION AGENCY
STEEL INDUSTRY STUDY
COMBINATION ACID PICKLING-CONTINUOUS
WASTEWATER TREATMENT SYSTEM
WATER FLOW DIAGRAM
Dwn. 4/9/79
FIGURE VII-8

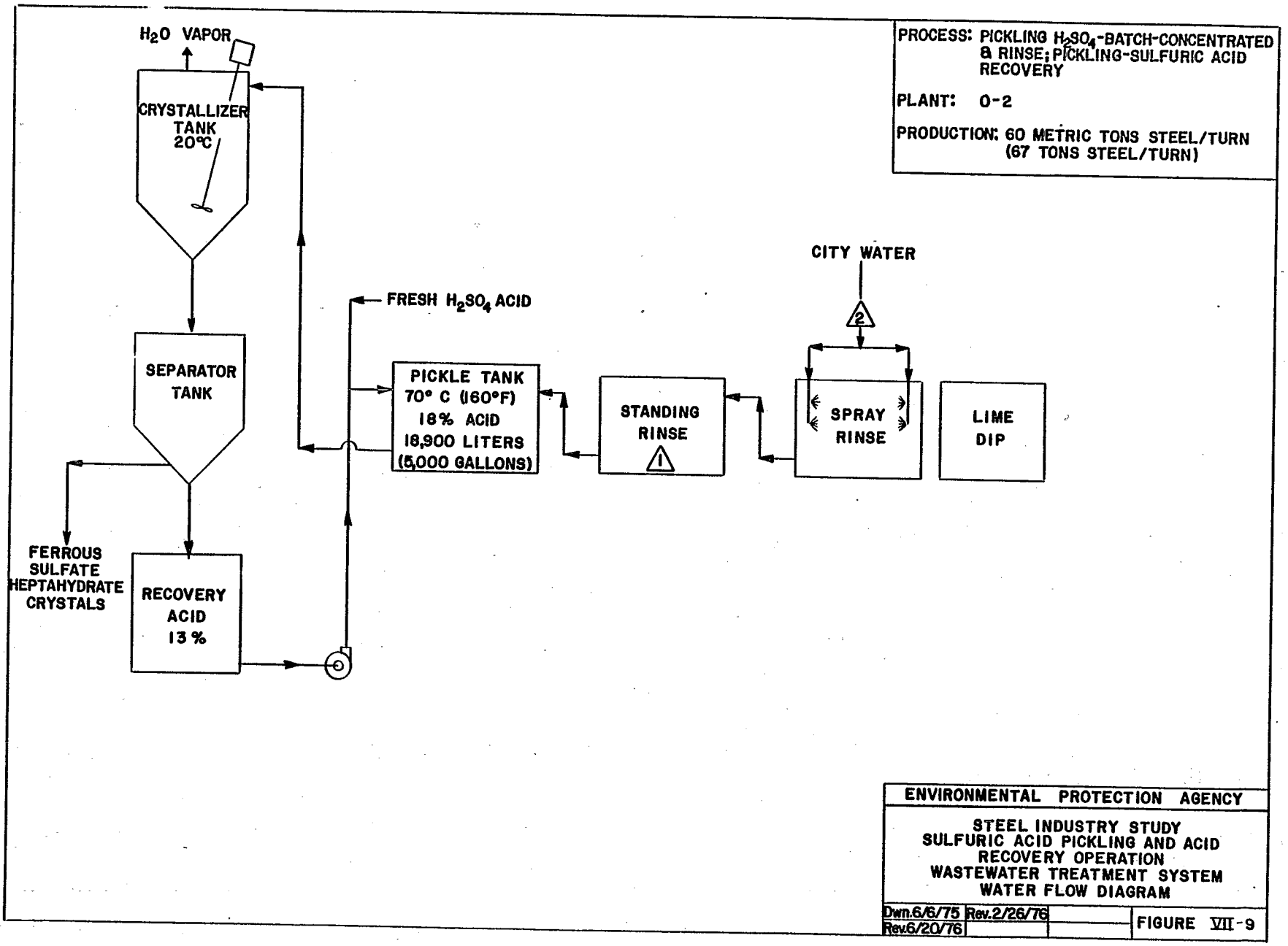
PROCESS: PICKLING H_2SO_4-BATCH-CONCENTRATED & RINSE; PICKLING-SULFURIC ACID RECOVERY
PLANT: O-2
PRODUCTION: 60 METRIC TONS STEEL/TURN (67 TONS STEEL/TURN)
H_2O VAPOR
CRYSTALLIZER TANK 20°C
SEPARATOR TANK
FERROUS SULFATE HEPTAHYDRATE CRYSTALS
RECOVERY ACID 13%
FRESH H_2SO_4 ACID
PICKLE TANK 70° C (160°F) 18% ACID 18,900 LITERS (5,000 GALLONS)
STANDING RINSE
1
CITY WATER
2
SPRAY RINSE
LIME DIP
ENVIRONMENTAL PROTECTION AGENCY
STEEL INDUSTRY STUDY
SULFURIC ACID PICKLING AND ACID RECOVERY OPERATION
WASTEWATER TREATMENT SYSTEM
WATER FLOW DIAGRAM
Dwn.6/6/75
Rev.2/26/76
Rev.6/20/76
FIGURE VII-9

PROCESS: PICKLING H_2SO_4-BATCH-CONCENTRATED & RINSE, PICKLING SULFURIC ACID RECOVERY

PLANT: P-2

PRODUCTION: 43 METRIC TONS OF STEEL/TURN (47 TONS OF STEEL/TURN)

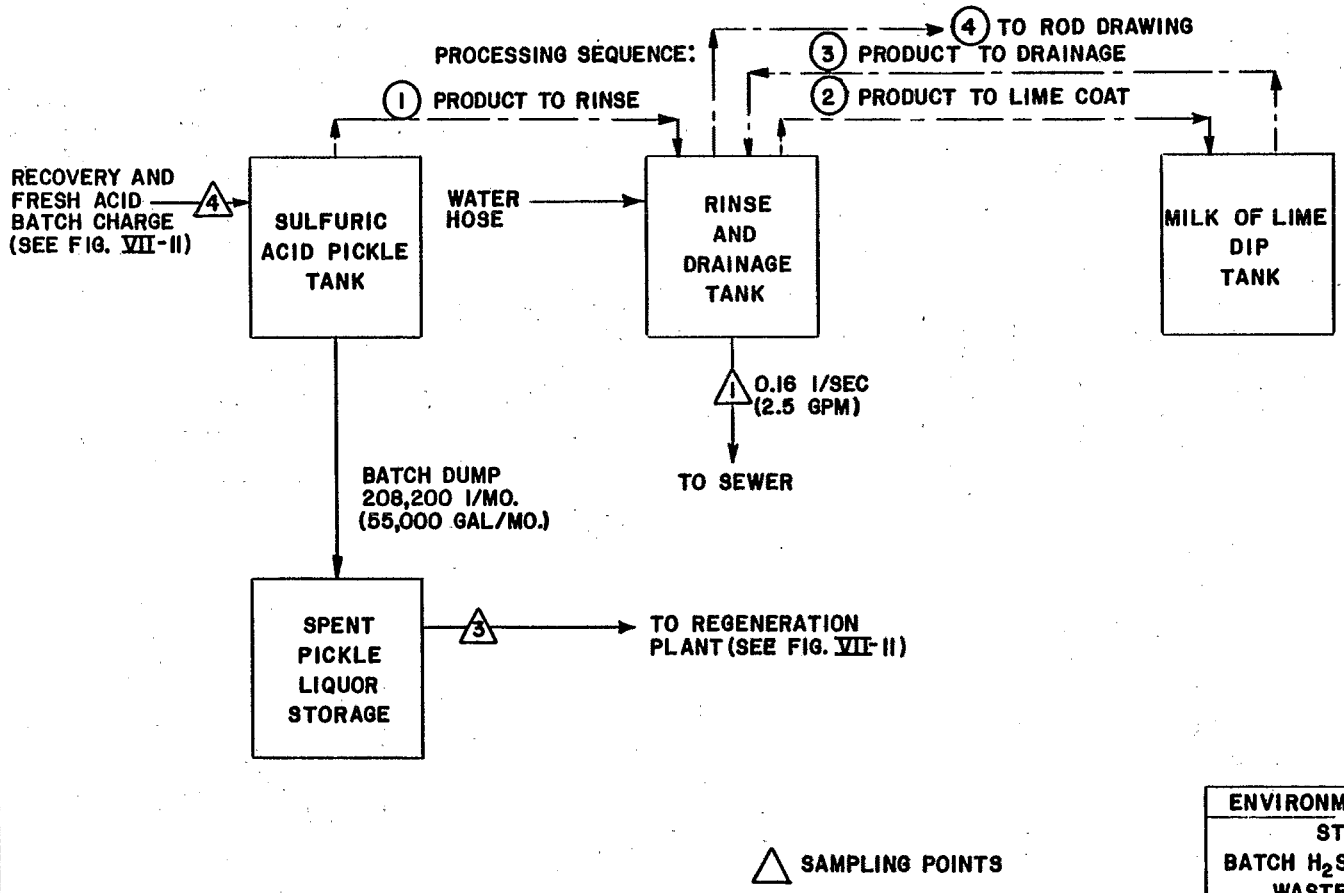

ENVIRONMENTAL PROTECTION AGENCY

STEEL INDUSTRY STUDY

BATCH H_2SO_4 PICKLING AND ACID RECOVERY WASTEWATER TREATMENT SYSTEM WATER FLOW DIAGRAM

Dwn.7/16/80

FIGURE VII-10

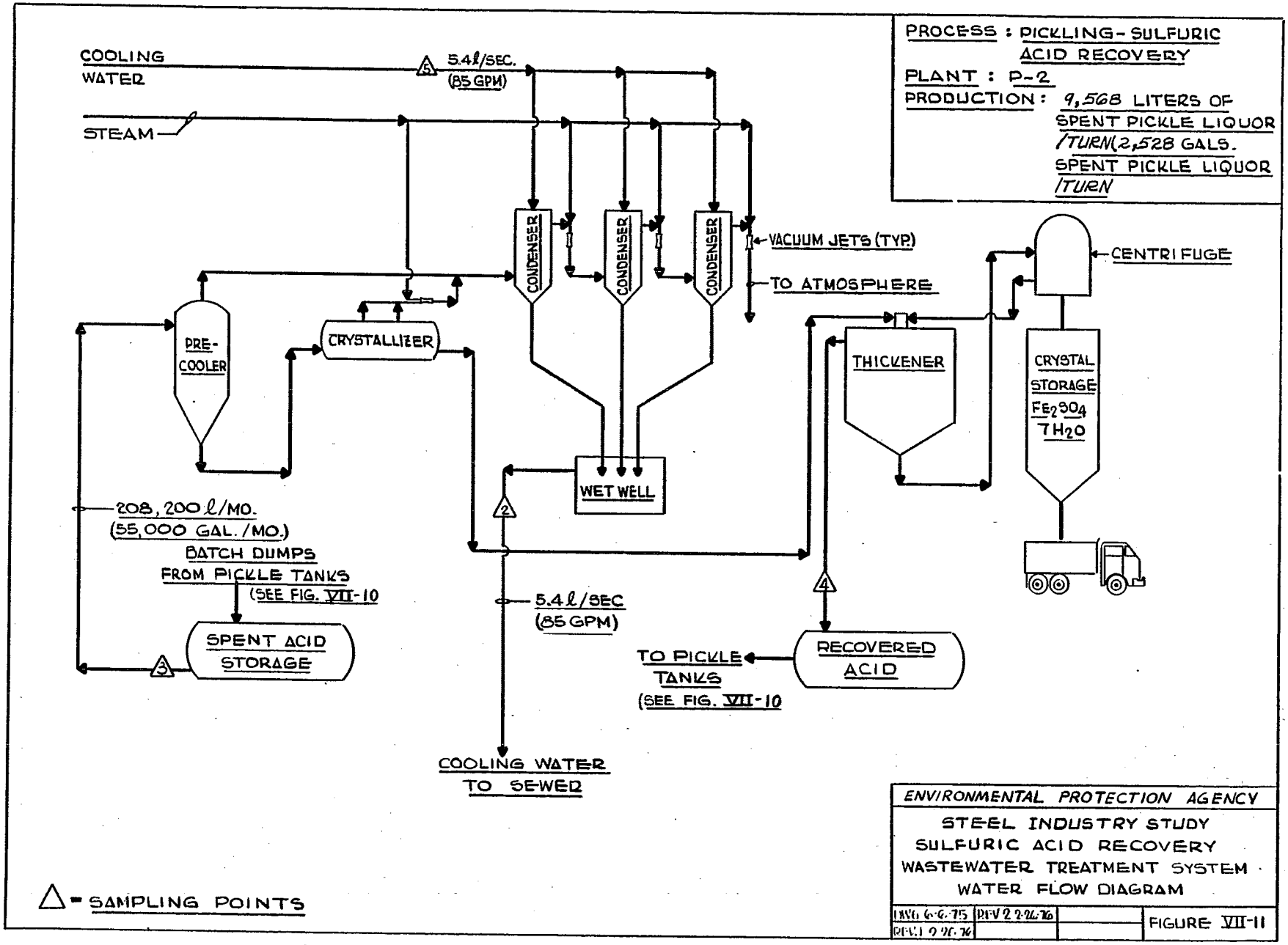
PROCESS : PICKLING-SULFURIC ACID RECOVERY
PLANT : P-2
PRODUCTION : 9,568 LITERS OF SPENT PICKLE LIQUOR /TURN (2,528 GALS. SPENT PICKLE LIQUOR /TURN
COOLING WATER
5.4 ℓ/SEC. (85 GPM)
STEAM
CONDENSER
CONDENSER
CONDENSER
VACUUM JETS (TYP.)
TO ATMOSPHERE
CENTRIFUGE
PRE-COOLER
CRYSTALLIZER
THICKENER
CRYSTAL STORAGE $FeSO_4 \cdot 7H_2O$
WET WELL
208,200 ℓ/MO. (55,000 GAL./MO.)
BATCH DUMPS FROM PICKLE TANKS (SEE FIG. VII-10
SPENT ACID STORAGE
5.4 ℓ/SEC (85 GPM)
TO PICKLE TANKS (SEE FIG. VII-10
RECOVERED ACID
COOLING WATER TO SEWER
△ = SAMPLING POINTS
ENVIRONMENTAL PROTECTION AGENCY
STEEL INDUSTRY STUDY
SULFURIC ACID RECOVERY
WASTEWATER TREATMENT SYSTEM
WATER FLOW DIAGRAM
DWG 6-6-75
REV 2-26-76
REV 2-26-76
REV 2-26-76
FIGURE VII-11

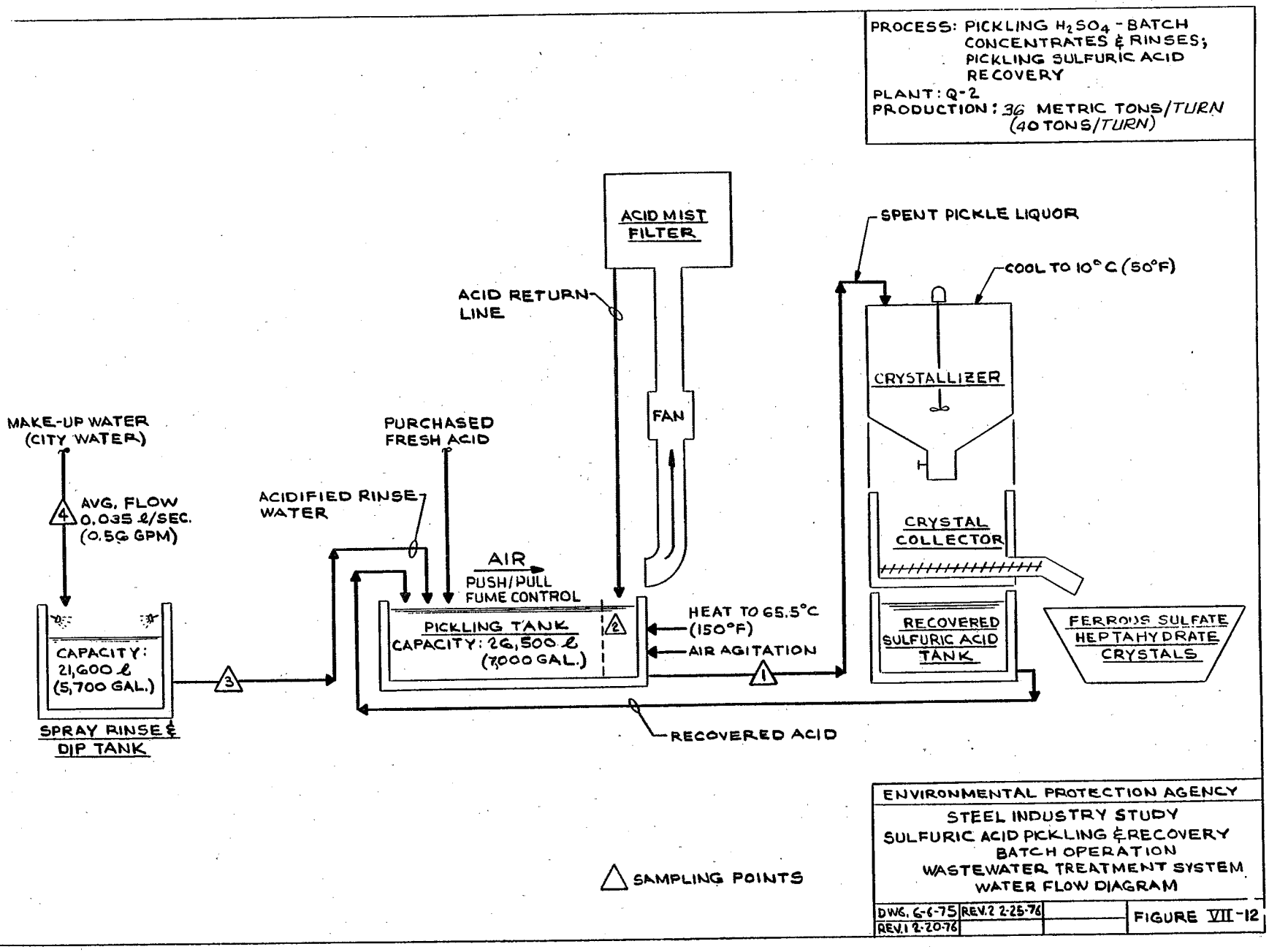
PROCESS: PICKLING H_2SO_4 - BATCH CONCENTRATES & RINSES; PICKLING SULFURIC ACID RECOVERY
PLANT: Q-2
PRODUCTION: 36 METRIC TONS/TURN (40 TONS/TURN)
ACID MIST FILTER
SPENT PICKLE LIQUOR
COOL TO 10°C (50°F)
ACID RETURN LINE
CRYSTALLIZER
FAN
MAKE-UP WATER (CITY WATER)
PURCHASED FRESH ACID
AVG. FLOW 0.035 ℓ/SEC. (0.56 GPM)
ACIDIFIED RINSE WATER
CRYSTAL COLLECTOR
AIR
PUSH/PULL FUME CONTROL
HEAT TO 65.5°C (150°F)
AIR AGITATION
PICKLING TANK
CAPACITY: 26,500 ℓ (7,000 GAL.)
RECOVERED SULFURIC ACID TANK
FERROUS SULFATE HEPTAHYDRATE CRYSTALS
CAPACITY: 21,600 ℓ (5,700 GAL.)
SPRAY RINSE & DIP TANK
RECOVERED ACID
SAMPLING POINTS
ENVIRONMENTAL PROTECTION AGENCY
STEEL INDUSTRY STUDY
SULFURIC ACID PICKLING & RECOVERY
BATCH OPERATION
WASTEWATER TREATMENT SYSTEM
WATER FLOW DIAGRAM
DWG. 6-6-75
REV.1 2-20-76
REV.2 2-25-76
FIGURE VII-12

PROCESS: BATCH PICKLING (SULFURIC ACID)
PLANT: R
PRODUCTION: 301 METRIC TONS STEEL/TURN
(332 TONS STEEL/TURN)

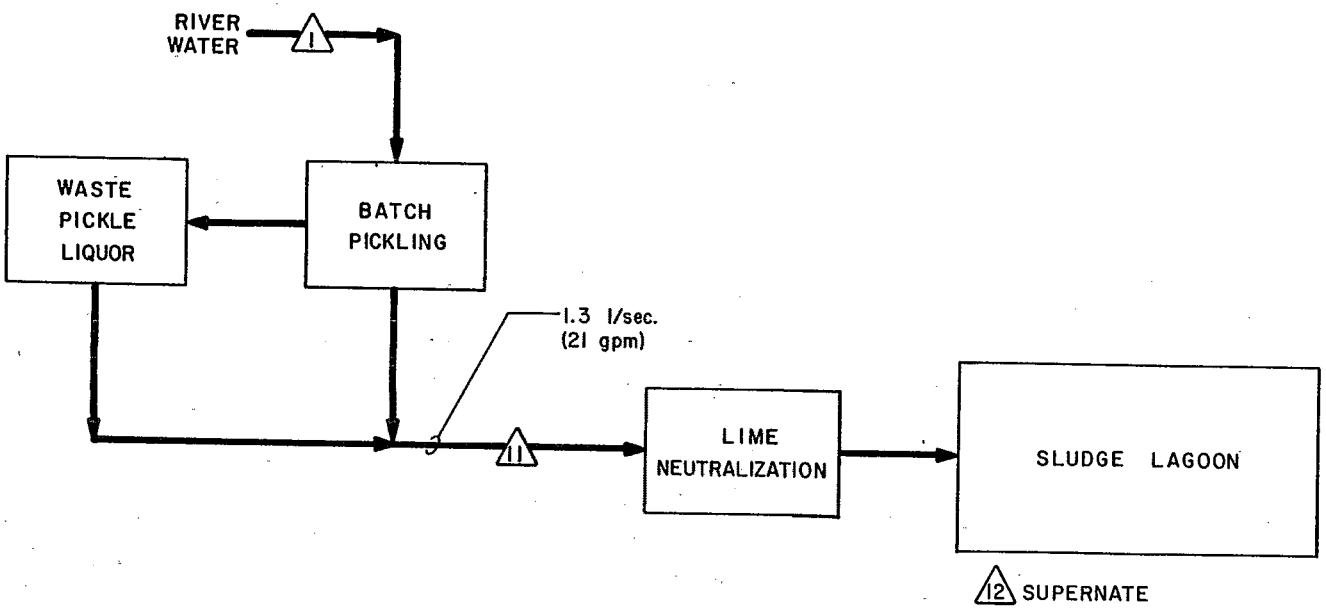

SAMPLING POINTS

ENVIRONMENTAL PROTECTION AGENCY

STEEL INDUSTRY STUDY
SULFURIC ACID BATCH PICKLING
WASTEWATER TREATMENT SYSTEM
WATER FLOW DIAGRAM

Dwn. 3/28/79

FIGURE VII-13

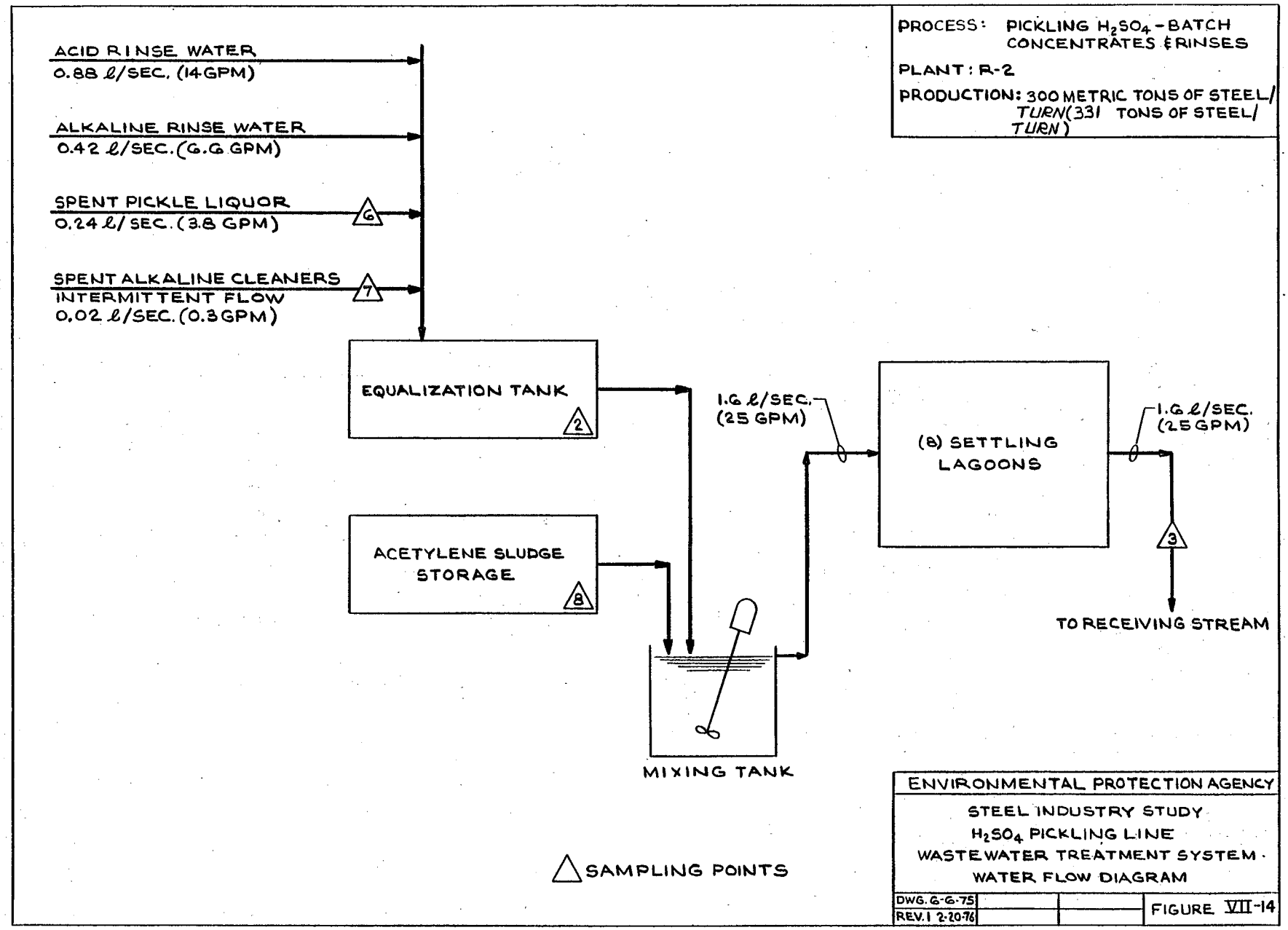
PROCESS: PICKLING H_2SO_4 - BATCH CONCENTRATES & RINSES
PLANT: R-2
PRODUCTION: 300 METRIC TONS OF STEEL/TURN (331 TONS OF STEEL/TURN)
ACID RINSE WATER
0.88 ℓ/SEC. (14 GPM)
ALKALINE RINSE WATER
0.42 ℓ/SEC. (6.6 GPM)
SPENT PICKLE LIQUOR
0.24 ℓ/SEC. (3.8 GPM)
6
SPENT ALKALINE CLEANERS
INTERMITTENT FLOW
0.02 ℓ/SEC. (0.3 GPM)
7
EQUALIZATION TANK
2
ACETYLENE SLUDGE STORAGE
8
1.6 ℓ/SEC. (25 GPM)
(8) SETTLING LAGOONS
1.6 ℓ/SEC. (25 GPM)
3
TO RECEIVING STREAM
MIXING TANK
SAMPLING POINTS
ENVIRONMENTAL PROTECTION AGENCY
STEEL INDUSTRY STUDY
H_2SO_4 PICKLING LINE
WASTEWATER TREATMENT SYSTEM
WATER FLOW DIAGRAM
DWG. 6-6-75
REV. 1 2-20-76
FIGURE VII-14

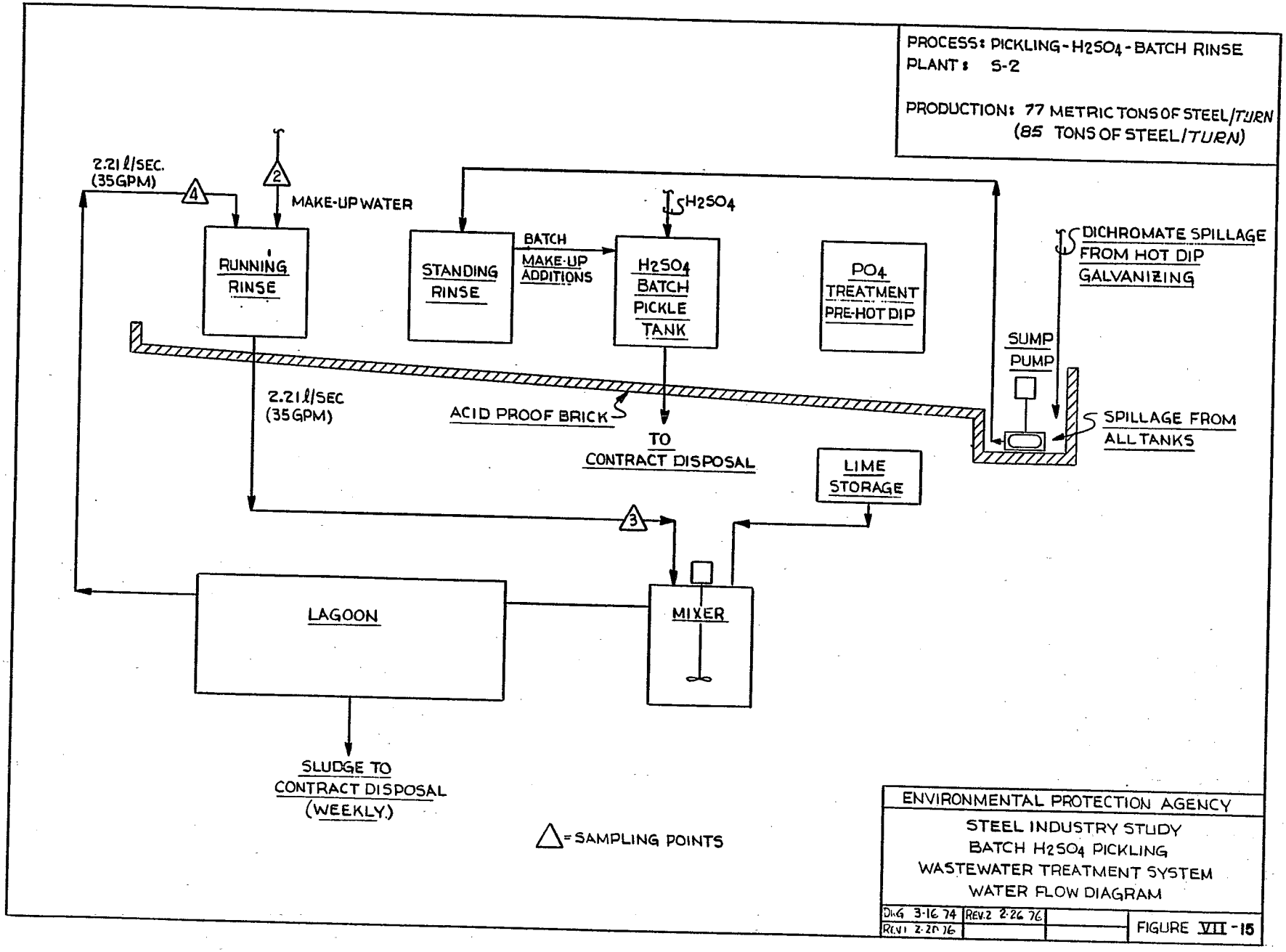
PROCESS: PICKLING - H2SO4 - BATCH RINSE
PLANT: S-2
PRODUCTION: 77 METRIC TONS OF STEEL/TURN
(85 TONS OF STEEL/TURN)
2.21 ℓ/SEC.
(35GPM)
4
2
MAKE-UP WATER
RUNNING RINSE
STANDING RINSE
BATCH MAKE-UP ADDITIONS
H2SO4
H2SO4 BATCH PICKLE TANK
PO4 TREATMENT PRE-HOT DIP
DICHROMATE SPILLAGE FROM HOT DIP GALVANIZING
SUMP PUMP
SPILLAGE FROM ALL TANKS
2.21 ℓ/SEC
(35GPM)
ACID PROOF BRICK
TO CONTRACT DISPOSAL
LIME STORAGE
3
LAGOON
MIXER
SLUDGE TO CONTRACT DISPOSAL (WEEKLY)
△ = SAMPLING POINTS
ENVIRONMENTAL PROTECTION AGENCY
STEEL INDUSTRY STUDY
BATCH H2SO4 PICKLING
WASTEWATER TREATMENT SYSTEM
WATER FLOW DIAGRAM
DWG 3-16-74
REV.2 2-26-76
REV.1 2-20-76
FIGURE VII-15

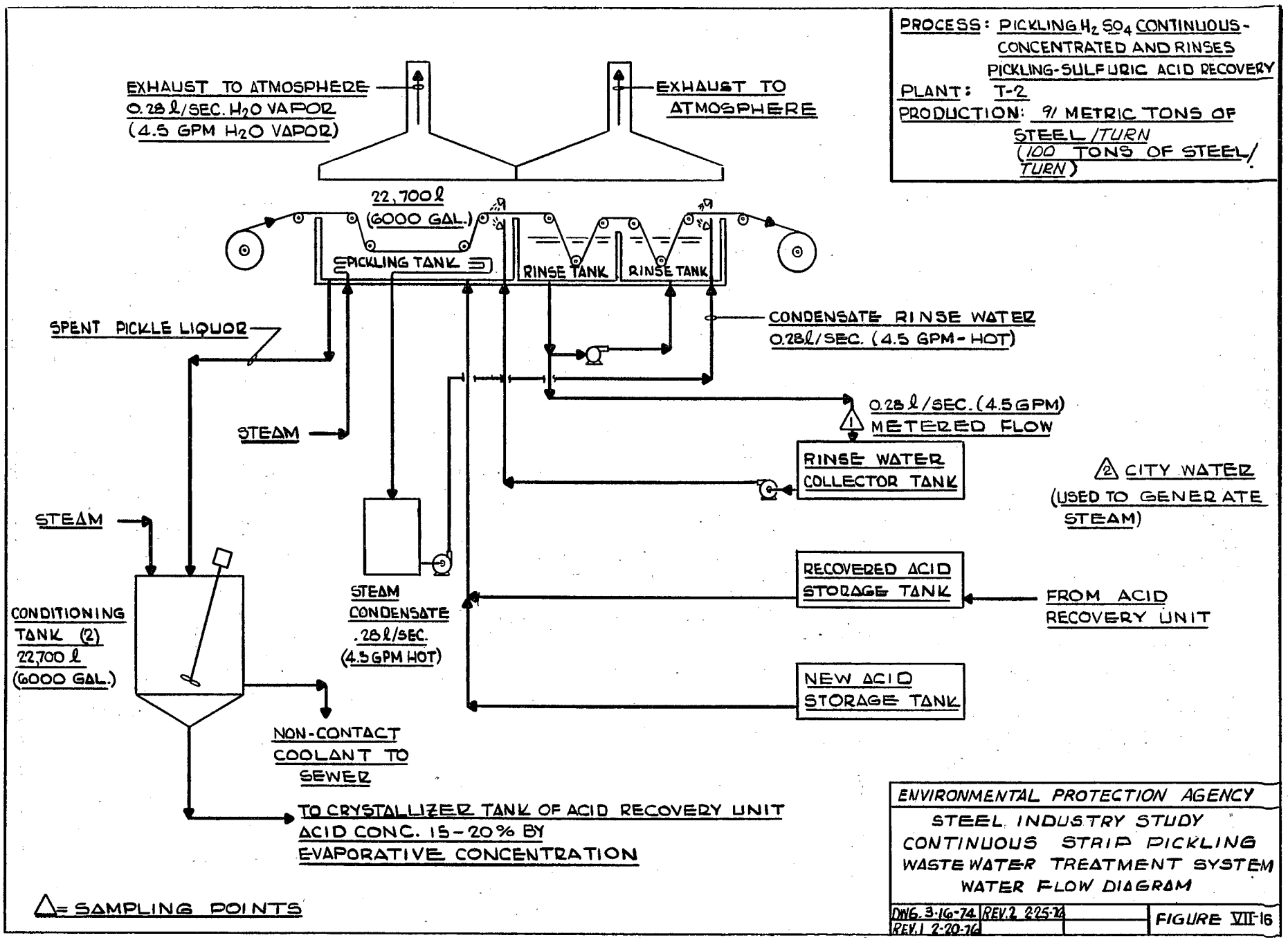
PROCESS: PICKLING H_2SO_4 CONTINUOUS-CONCENTRATED AND RINSES
PICKLING-SULFURIC ACID RECOVERY
PLANT: T-2
PRODUCTION: 91 METRIC TONS OF STEEL/TURN (100 TONS OF STEEL/TURN)
EXHAUST TO ATMOSPHERE
0.28 ℓ/SEC. H_2O VAPOR
(4.5 GPM H_2O VAPOR)
EXHAUST TO ATMOSPHERE
22,700 ℓ
(6000 GAL.)
PICKLING TANK
RINSE TANK
RINSE TANK
SPENT PICKLE LIQUOR
CONDENSATE RINSE WATER
0.28 ℓ/SEC. (4.5 GPM-HOT)
STEAM
0.28 ℓ/SEC. (4.5 GPM)
METERED FLOW
RINSE WATER COLLECTOR TANK
2 CITY WATER
(USED TO GENERATE STEAM)
STEAM
STEAM CONDENSATE
.28 ℓ/SEC.
(4.5 GPM HOT)
RECOVERED ACID STORAGE TANK
FROM ACID RECOVERY UNIT
CONDITIONING TANK (2)
22,700 ℓ
(6000 GAL.)
NEW ACID STORAGE TANK
NON-CONTACT COOLANT TO SEWER
TO CRYSTALLIZER TANK OF ACID RECOVERY UNIT
ACID CONC. 15-20% BY
EVAPORATIVE CONCENTRATION
△= SAMPLING POINTS
ENVIRONMENTAL PROTECTION AGENCY
STEEL INDUSTRY STUDY
CONTINUOUS STRIP PICKLING
WASTE WATER TREATMENT SYSTEM
WATER FLOW DIAGRAM
DWG. 3-16-74
REV. 1 2-20-76
REV. 2 2-25-76
FIGURE VII-16

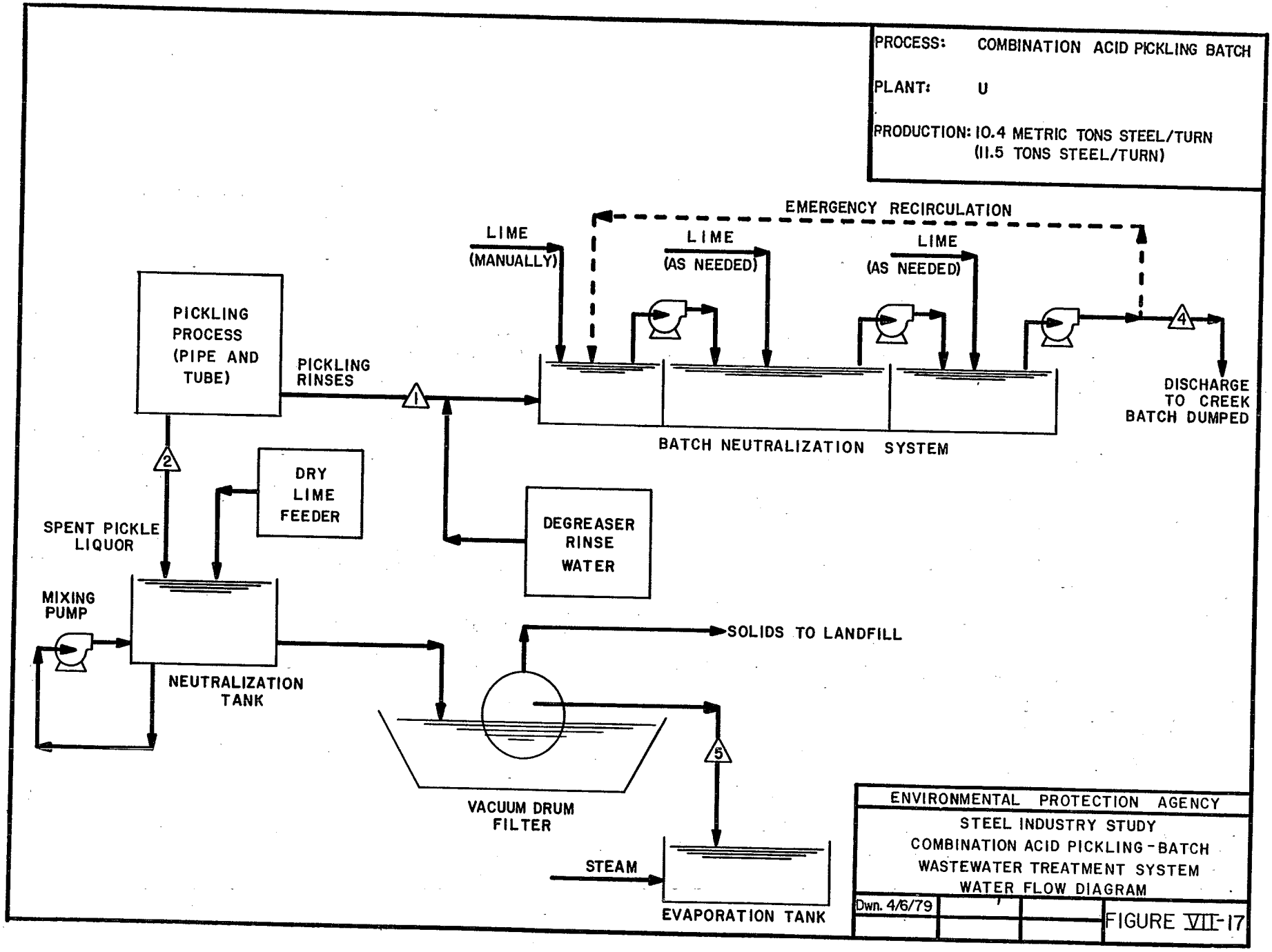
PROCESS: COMBINATION ACID PICKLING BATCH
PLANT: U
PRODUCTION: 10.4 METRIC TONS STEEL/TURN
(11.5 TONS STEEL/TURN)
EMERGENCY RECIRCULATION
LIME
(MANUALLY)
LIME
(AS NEEDED)
LIME
(AS NEEDED)
PICKLING PROCESS (PIPE AND TUBE)
PICKLING RINSES
1
2
4
5
DISCHARGE TO CREEK BATCH DUMPED
BATCH NEUTRALIZATION SYSTEM
DRY LIME FEEDER
DEGREASER RINSE WATER
SPENT PICKLE LIQUOR
MIXING PUMP
NEUTRALIZATION TANK
SOLIDS TO LANDFILL
VACUUM DRUM FILTER
STEAM
EVAPORATION TANK
ENVIRONMENTAL PROTECTION AGENCY
STEEL INDUSTRY STUDY
COMBINATION ACID PICKLING - BATCH
WASTEWATER TREATMENT SYSTEM
WATER FLOW DIAGRAM
Dwn. 4/6/79
FIGURE VII-17

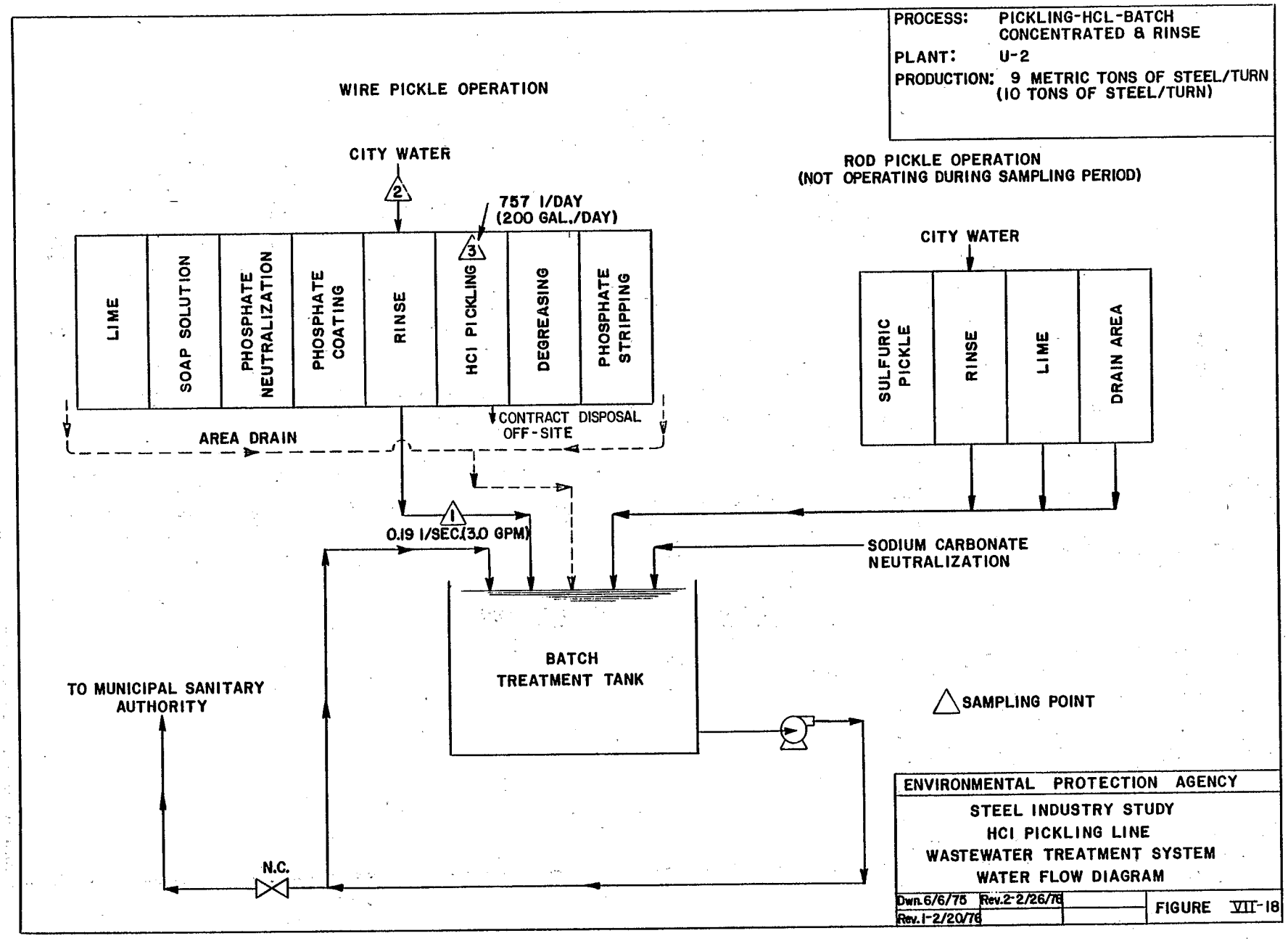
PROCESS: PICKLING-HCL-BATCH CONCENTRATED & RINSE
PLANT: U-2
PRODUCTION: 9 METRIC TONS OF STEEL/TURN (10 TONS OF STEEL/TURN)
WIRE PICKLE OPERATION
CITY WATER
2
757 I/DAY (200 GAL./DAY)
3
LIME
SOAP SOLUTION
PHOSPHATE NEUTRALIZATION
PHOSPHATE COATING
RINSE
HCI PICKLING
DEGREASING
PHOSPHATE STRIPPING
CONTRACT DISPOSAL OFF-SITE
AREA DRAIN
ROD PICKLE OPERATION
(NOT OPERATING DURING SAMPLING PERIOD)
CITY WATER
SULFURIC PICKLE
RINSE
LIME
DRAIN AREA
1
0.19 I/SEC (3.0 GPM)
SODIUM CARBONATE NEUTRALIZATION
BATCH TREATMENT TANK
TO MUNICIPAL SANITARY AUTHORITY
SAMPLING POINT
N.C.
ENVIRONMENTAL PROTECTION AGENCY
STEEL INDUSTRY STUDY
HCI PICKLING LINE
WASTEWATER TREATMENT SYSTEM
WATER FLOW DIAGRAM
Dwn.6/6/75 Rev.2-2/26/76
Rev.1-2/20/76
FIGURE VII-18

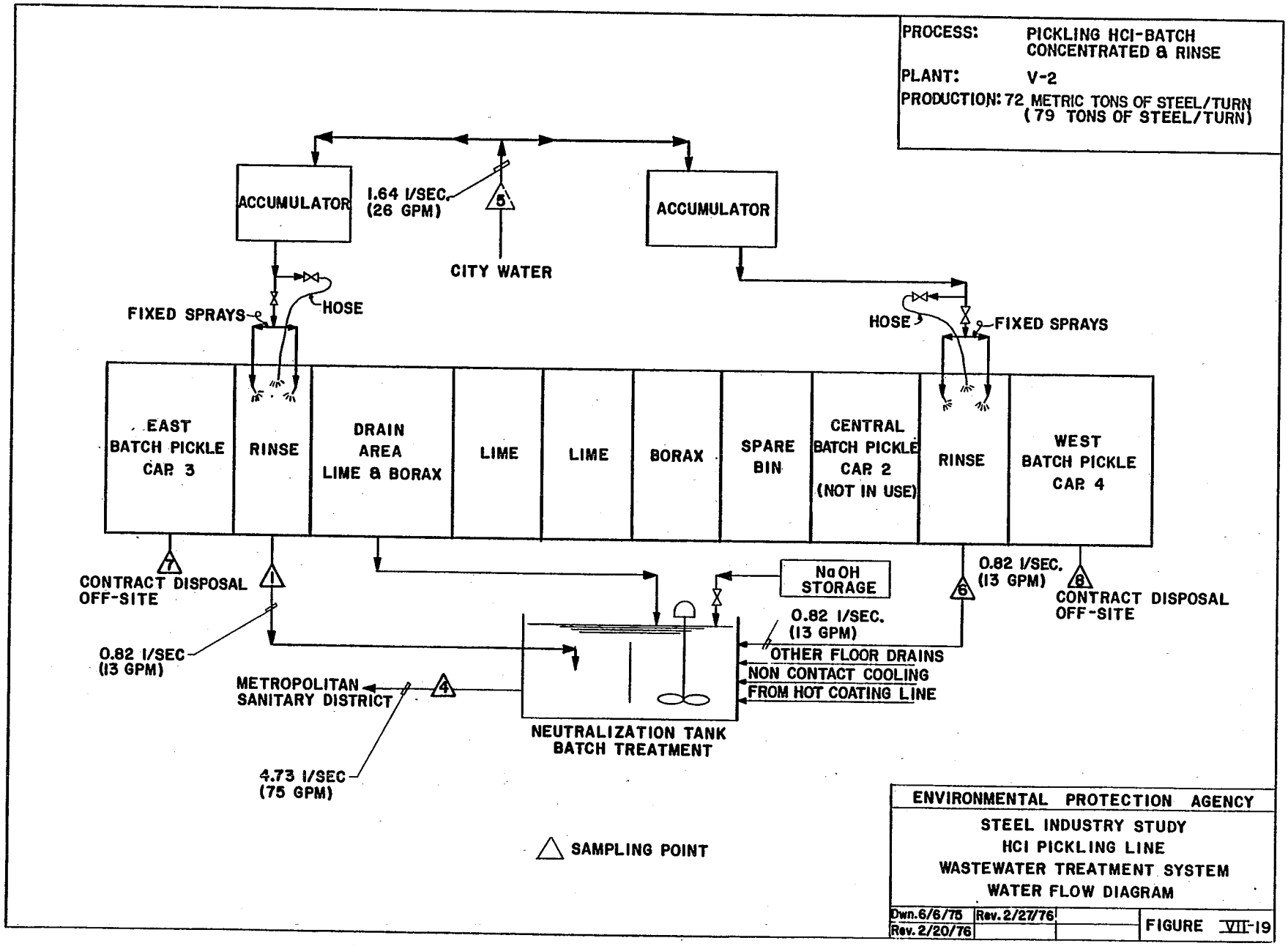
PROCESS: PICKLING HCl-BATCH CONCENTRATED & RINSE
PLANT: V-2
PRODUCTION: 72 METRIC TONS OF STEEL/TURN (79 TONS OF STEEL/TURN)
ACCUMULATOR
1.64 l/SEC. (26 GPM)
5
CITY WATER
ACCUMULATOR
FIXED SPRAYS
HOSE
HOSE
FIXED SPRAYS
EAST BATCH PICKLE CAR 3
RINSE
DRAIN AREA LIME & BORAX
LIME
LIME
BORAX
SPARE BIN
CENTRAL BATCH PICKLE CAR 2 (NOT IN USE)
RINSE
WEST BATCH PICKLE CAR 4
7
CONTRACT DISPOSAL OFF-SITE
1
0.82 l/SEC (13 GPM)
NaOH STORAGE
0.82 l/SEC. (13 GPM)
6
8
CONTRACT DISPOSAL OFF-SITE
0.82 l/SEC. (13 GPM)
OTHER FLOOR DRAINS
NON CONTACT COOLING
FROM HOT COATING LINE
METROPOLITAN SANITARY DISTRICT
4
NEUTRALIZATION TANK BATCH TREATMENT
4.73 l/SEC (75 GPM)
SAMPLING POINT
ENVIRONMENTAL PROTECTION AGENCY
STEEL INDUSTRY STUDY
HCl PICKLING LINE
WASTEWATER TREATMENT SYSTEM
WATER FLOW DIAGRAM
Dwn. 6/6/75
Rev. 2/27/76
Rev. 2/20/76
FIGURE VII-19

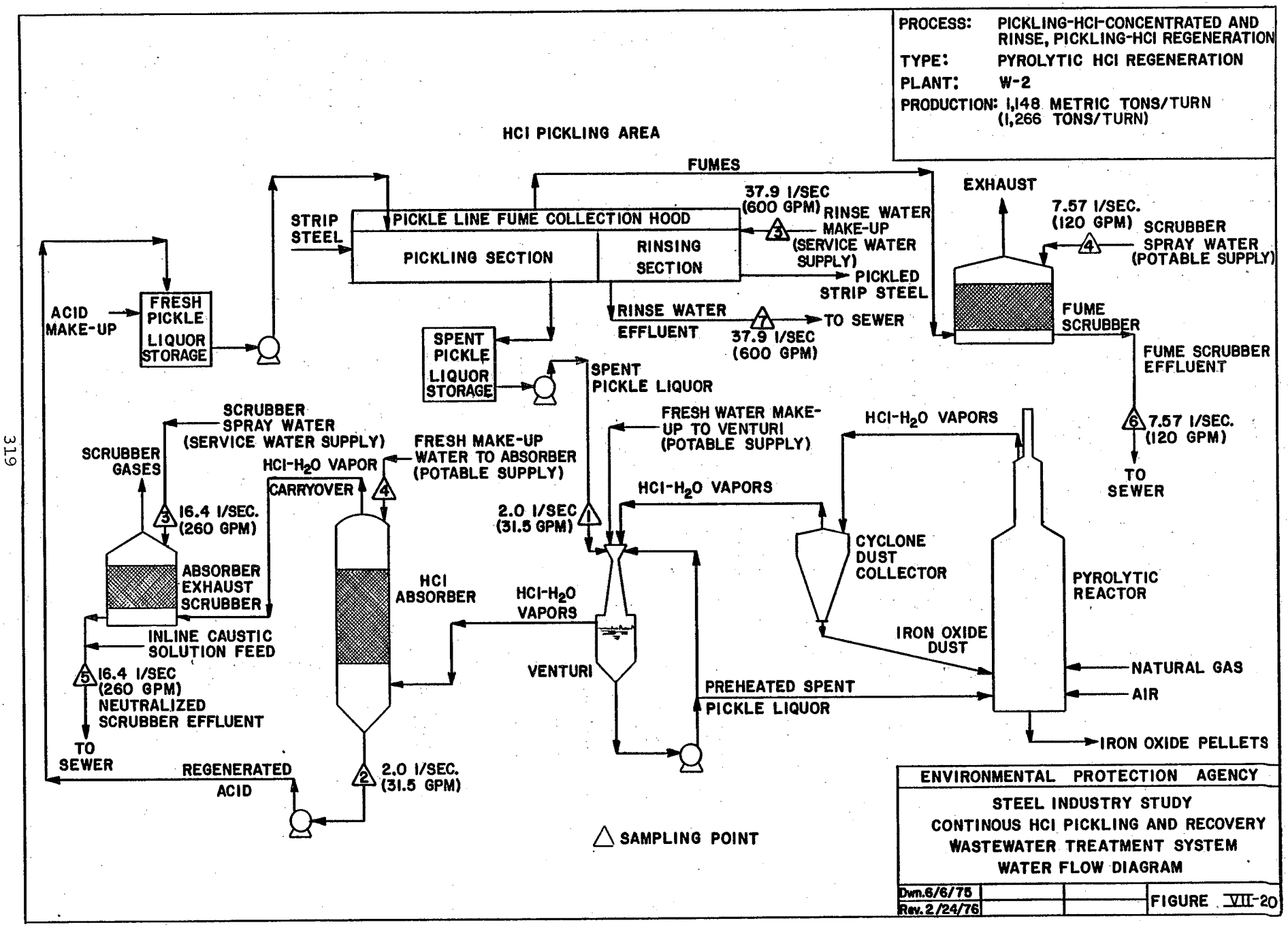
PROCESS: PICKLING-HCl-CONCENTRATED AND RINSE, PICKLING-HCl REGENERATION
TYPE: PYROLYTIC HCl REGENERATION
PLANT: W-2
PRODUCTION: 1,148 METRIC TONS/TURN (1,266 TONS/TURN)
HCl PICKLING AREA
FUMES
EXHAUST
STRIP STEEL
PICKLE LINE FUME COLLECTION HOOD
PICKLING SECTION
RINSING SECTION
37.9 l/SEC (600 GPM)
RINSE WATER MAKE-UP (SERVICE WATER SUPPLY)
PICKLED STRIP STEEL
7.57 l/SEC. (120 GPM)
SCRUBBER SPRAY WATER (POTABLE SUPPLY)
ACID MAKE-UP
FRESH PICKLE LIQUOR STORAGE
RINSE WATER EFFLUENT
TO SEWER
37.9 l/SEC (600 GPM)
FUME SCRUBBER
FUME SCRUBBER EFFLUENT
SPENT PICKLE LIQUOR STORAGE
SPENT PICKLE LIQUOR
7.57 l/SEC. (120 GPM)
TO SEWER
SCRUBBER SPRAY WATER (SERVICE WATER SUPPLY)
FRESH WATER MAKE-UP TO VENTURI (POTABLE SUPPLY)
HCl-H2O VAPORS
SCRUBBER GASES
HCl-H2O VAPOR
FRESH MAKE-UP WATER TO ABSORBER (POTABLE SUPPLY)
CARRYOVER
HCl-H2O VAPORS
16.4 l/SEC. (260 GPM)
2.0 l/SEC (31.5 GPM)
CYCLONE DUST COLLECTOR
ABSORBER EXHAUST SCRUBBER
HCl ABSORBER
HCl-H2O VAPORS
PYROLYTIC REACTOR
INLINE CAUSTIC SOLUTION FEED
IRON OXIDE DUST
VENTURI
NATURAL GAS
16.4 l/SEC (260 GPM) NEUTRALIZED SCRUBBER EFFLUENT
PREHEATED SPENT PICKLE LIQUOR
AIR
TO SEWER
IRON OXIDE PELLETS
REGENERATED ACID
2.0 l/SEC. (31.5 GPM)
SAMPLING POINT
ENVIRONMENTAL PROTECTION AGENCY
STEEL INDUSTRY STUDY
CONTINOUS HCl PICKLING AND RECOVERY
WASTEWATER TREATMENT SYSTEM
WATER FLOW DIAGRAM
Dwn.6/6/75
Rev.2/24/76
FIGURE VII-20

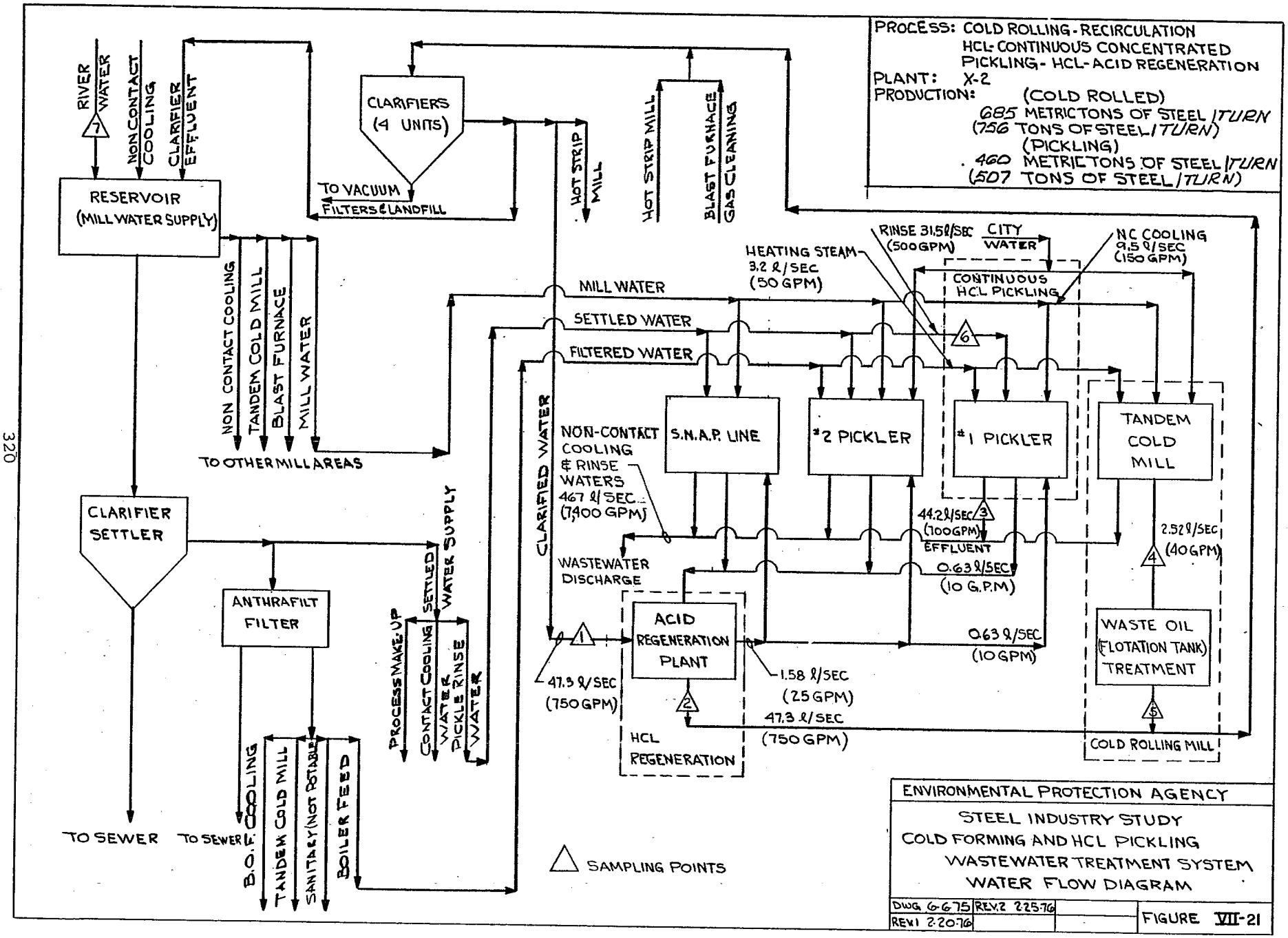
PROCESS: COLD ROLLING - RECIRCULATION
HCL- CONTINUOUS CONCENTRATED
PICKLING - HCL - ACID REGENERATION
PLANT: X-2
PRODUCTION: (COLD ROLLED)
685 METRIC TONS OF STEEL/TURN
(756 TONS OF STEEL/TURN)
(PICKLING)
460 METRIC TONS OF STEEL/TURN
(507 TONS OF STEEL/TURN)
RIVER WATER
NON CONTACT COOLING
CLARIFIER EFFLUENT
RESERVOIR (MILL WATER SUPPLY)
CLARIFIERS (4 UNITS)
TO VACUUM FILTERS & LANDFILL
HOT STRIP MILL
HOT STRIP MILL
BLAST FURNACE GAS CLEANING
NON CONTACT COOLING
TANDEM COLD MILL
BLAST FURNACE
MILL WATER
TO OTHER MILL AREAS
MILL WATER
SETTLED WATER
FILTERED WATER
CLARIFIED WATER
HEATING STEAM 3.2 ℓ/SEC (50 GPM)
RINSE 31.5 ℓ/SEC (500 GPM)
CITY WATER
NC COOLING 9.5 ℓ/SEC (150 GPM)
CONTINUOUS HCL PICKLING
NON-CONTACT COOLING & RINSE WATERS 467 ℓ/SEC (7,400 GPM)
S.N.A.P. LINE
#2 PICKLER
#1 PICKLER
TANDEM COLD MILL
44.2 ℓ/SEC (700 GPM) EFFLUENT
0.63 ℓ/SEC (10 G.P.M)
2.52 ℓ/SEC (40 GPM)
WASTEWATER DISCHARGE
CLARIFIER SETTLER
ANTHRAFILT FILTER
SETTLED WATER SUPPLY
PROCESS MAKE UP
CONTACT COOLING WATER
PICKLE RINSE WATER
ACID REGENERATION PLANT
HCL REGENERATION
47.3 ℓ/SEC (750 GPM)
1.58 ℓ/SEC (25 GPM)
47.3 ℓ/SEC (750 GPM)
0.63 ℓ/SEC (10 GPM)
WASTE OIL (FLOTATION TANK) TREATMENT
COLD ROLLING MILL
TO SEWER
TO SEWER
B.O.F. COOLING
TANDEM COLD MILL
SANITARY (NOT POTABLE)
BOILER FEED
SAMPLING POINTS
ENVIRONMENTAL PROTECTION AGENCY
STEEL INDUSTRY STUDY
COLD FORMING AND HCL PICKLING
WASTEWATER TREATMENT SYSTEM
WATER FLOW DIAGRAM
DWG 6-675 REV.2 2-25-76
REV.1 2-20-76
FIGURE VII-21

PROCESS; PICKLING-HYDROCHLORIC ACID REGENERATION

PLANT: X-2

PRODUCTION: 41 METRIC TONS OF HCl/TURN (46 TONS OF HCl/TURN)

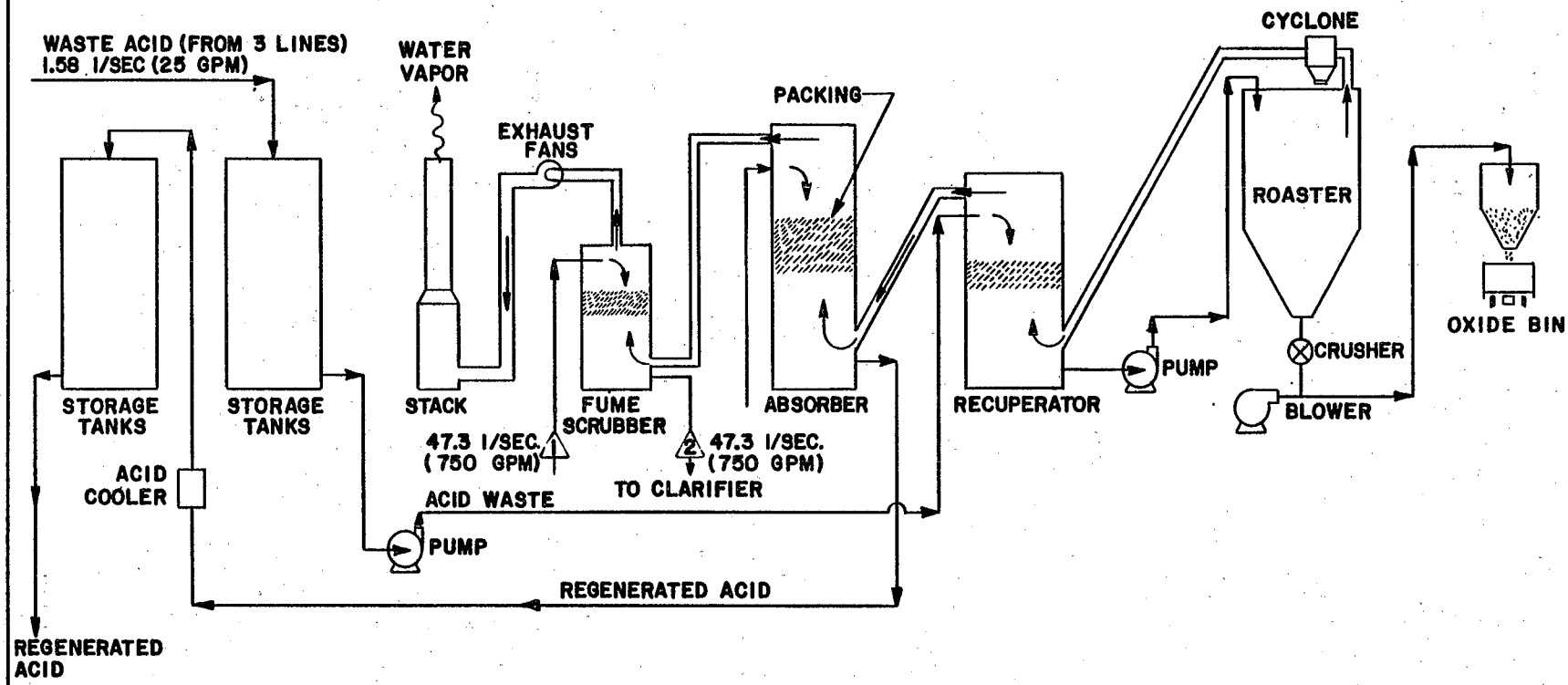

△ SAMPLING POINT

ENVIRONMENTAL PROTECTION AGENCY

STEEL INDUSTRY STUDY
HCl REGENERATION
WASTEWATER TREATMENT SYSTEM
WATER FLOW DIAGRAM

Dwn.6/5/74	Rev.2/25/76		FIGURE VII-22
Rev.2/20/76			

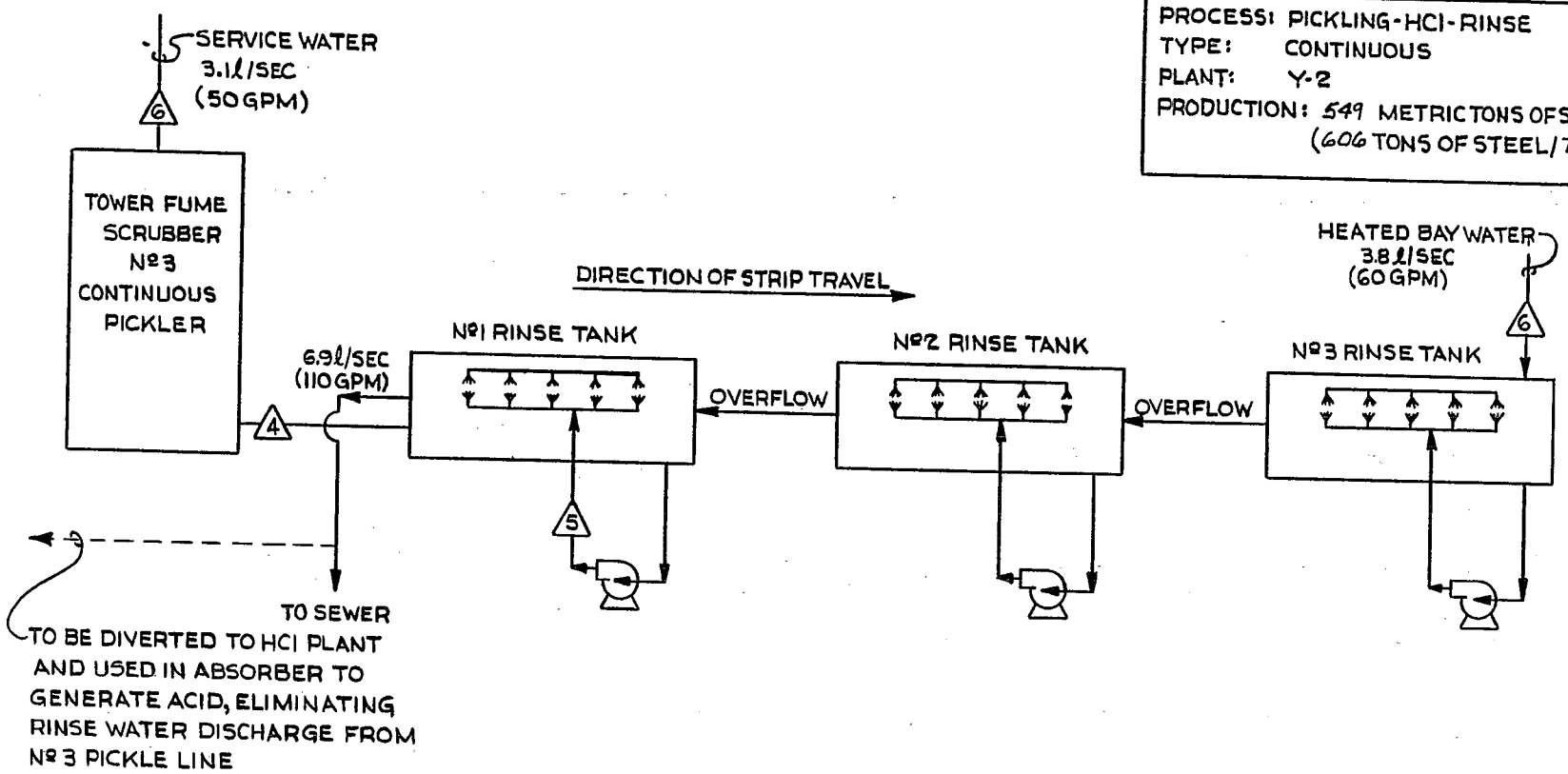

PROCESS: PICKLING-HCl-RINSE
TYPE: CONTINUOUS
PLANT: Y-2
PRODUCTION: 549 METRIC TONS OF STEEL/TURN
(606 TONS OF STEEL/TURN)

△ = SAMPLING POINTS

ENVIRONMENTAL PROTECTION AGENCY

STEEL INDUSTRY STUDY
HCl PICKLE LINE
WASTEWATER TREATMENT SYSTEM
WATER FLOW DIAGRAM

DWG. 6-6-75	REV.2 2-27-76		FIGURE VII-23
REV1 2-20-76			

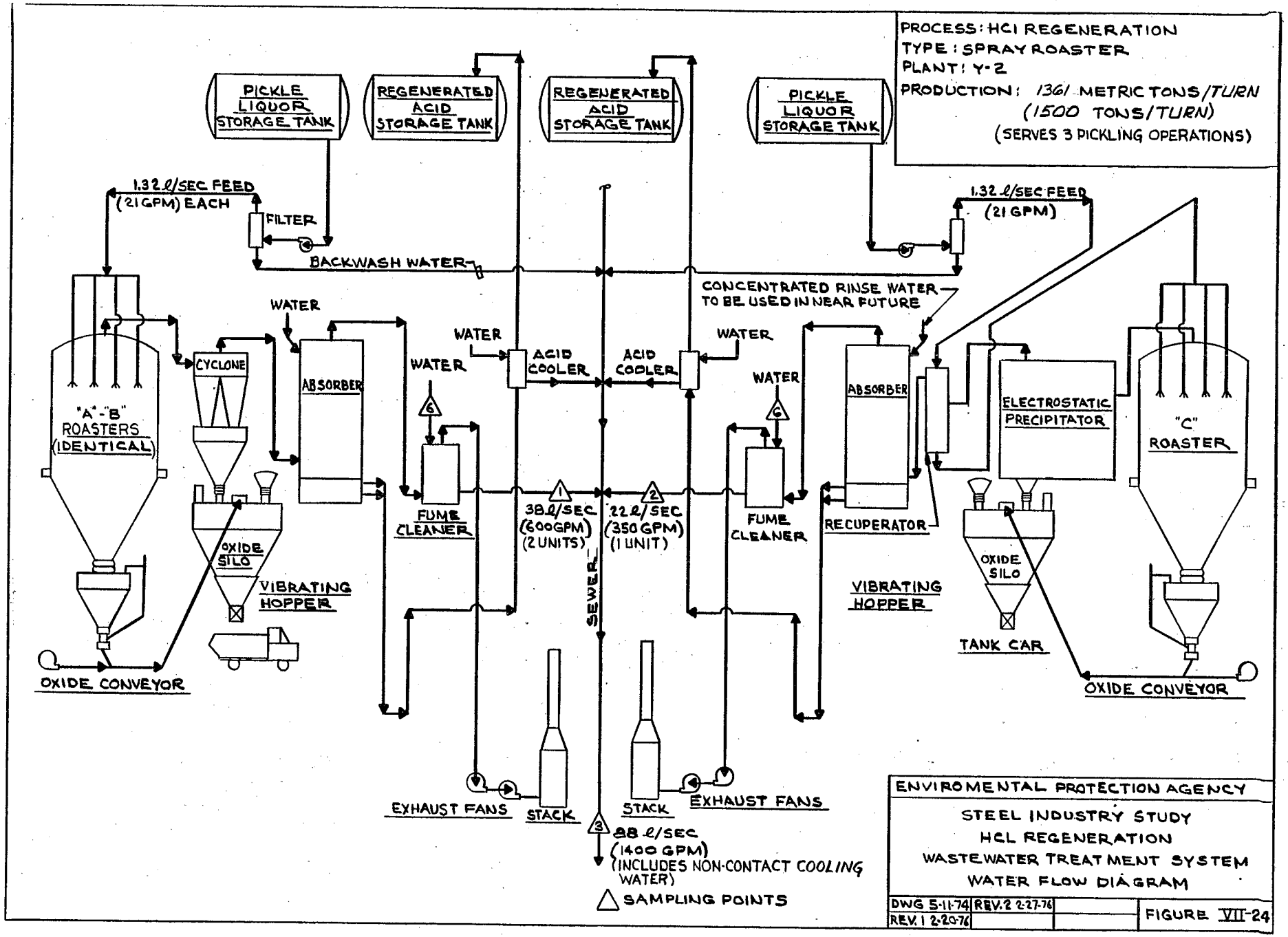
PROCESS: HCl REGENERATION
TYPE: SPRAY ROASTER
PLANT: Y-2
PRODUCTION: 1361 METRIC TONS/TURN
(1500 TONS/TURN)
(SERVES 3 PICKLING OPERATIONS)
PICKLE LIQUOR STORAGE TANK
REGENERATED ACID STORAGE TANK
REGENERATED ACID STORAGE TANK
PICKLE LIQUOR STORAGE TANK
1.32 ℓ/SEC FEED (21 GPM) EACH
FILTER
BACKWASH WATER
1.32 ℓ/SEC FEED (21 GPM)
CONCENTRATED RINSE WATER TO BE USED IN NEAR FUTURE
WATER
WATER
WATER
WATER
WATER
ACID COOLER
ACID COOLER
CYCLONE
ABSORBER
ABSORBER
"A"-"B" ROASTERS (IDENTICAL)
FUME CLEANER
FUME CLEANER
38 ℓ/SEC (600 GPM) (2 UNITS)
22 ℓ/SEC (350 GPM) (1 UNIT)
RECUPERATOR
ELECTROSTATIC PRECIPITATOR
"C" ROASTER
OXIDE SILO
OXIDE SILO
VIBRATING HOPPER
VIBRATING HOPPER
TANK CAR
OXIDE CONVEYOR
OXIDE CONVEYOR
SEWER
EXHAUST FANS
STACK
STACK
EXHAUST FANS
88 ℓ/SEC (1400 GPM) (INCLUDES NON-CONTACT COOLING WATER)
SAMPLING POINTS
ENVIROMENTAL PROTECTION AGENCY
STEEL INDUSTRY STUDY
HCL REGENERATION
WASTEWATER TREATMENT SYSTEM
WATER FLOW DIAGRAM
DWG 5-11-74
REV. 2 2-27-76
REV. 1 2-20-76
FIGURE VII-24

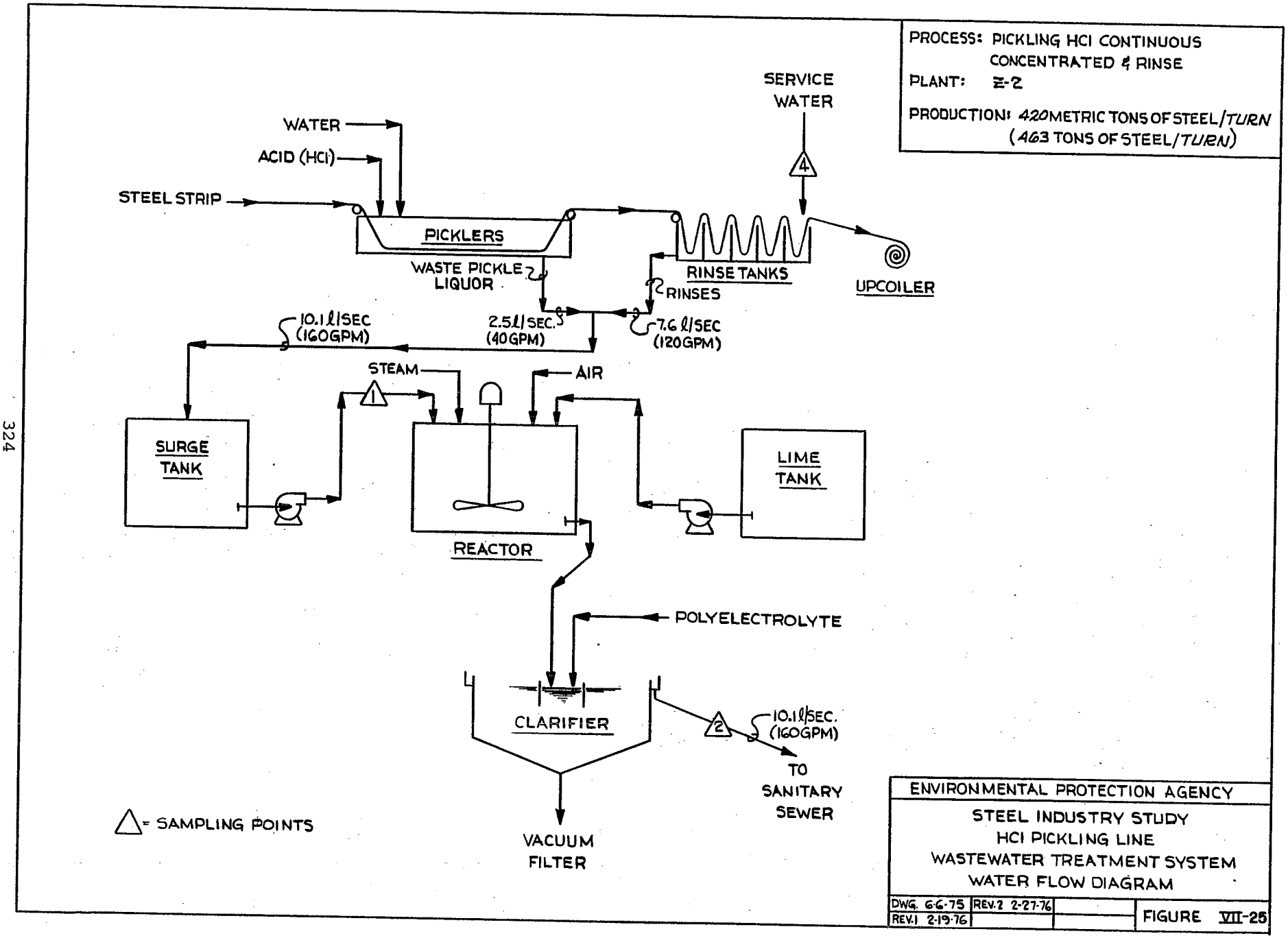
PROCESS: PICKLING HCl CONTINUOUS
CONCENTRATED & RINSE
PLANT: Z-2
PRODUCTION: 420 METRIC TONS OF STEEL/TURN
(463 TONS OF STEEL/TURN)
SERVICE WATER
WATER
ACID (HCl)
STEEL STRIP
PICKLERS
WASTE PICKLE LIQUOR
RINSE TANKS
RINSES
UPCOILER
10.1 ℓ/SEC (160GPM)
2.5 ℓ/SEC. (40GPM)
7.6 ℓ/SEC (120GPM)
STEAM
AIR
SURGE TANK
REACTOR
LIME TANK
POLYELECTROLYTE
CLARIFIER
10.1 ℓ/SEC. (160GPM)
TO SANITARY SEWER
VACUUM FILTER
△ = SAMPLING POINTS
ENVIRONMENTAL PROTECTION AGENCY
STEEL INDUSTRY STUDY
HCl PICKLING LINE
WASTEWATER TREATMENT SYSTEM
WATER FLOW DIAGRAM
DWG. 6-6-75
REV. 2 2-27-76
REV. 1 2-19-76
FIGURE VII-25

PROCESS: PICKLING-HCl CONTINUOUS
CONCENTRATED & RINSE
PLANT: AA-2
PRODUCTION: 871 METRIC TONS OF STEEL/TURN
(960 TONS OF STEEL/TURN)

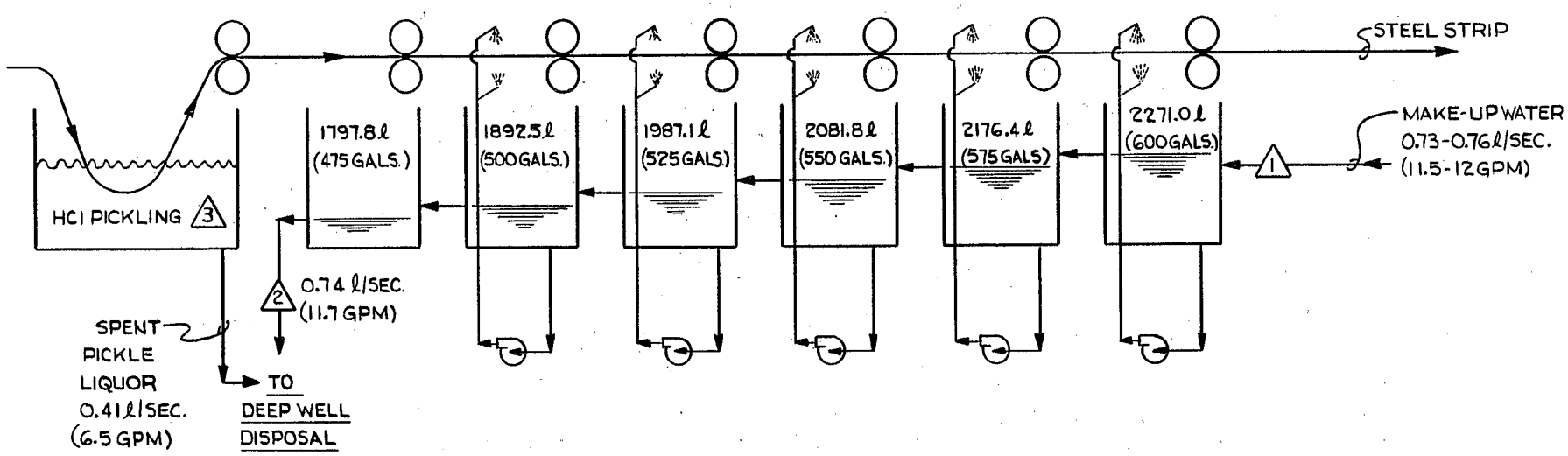

△ = SAMPLING POINTS

ENVIRONMENTAL PROTECTION AGENCY

STEEL INDUSTRY STUDY
HCl PICKLING LINE
WASTEWATER TREATMENT SYSTEM
WATER FLOW DIAGRAM

DWG 6-6-75	REV.2 2-27-76		FIGURE VII-26
REV1 2-20-76			

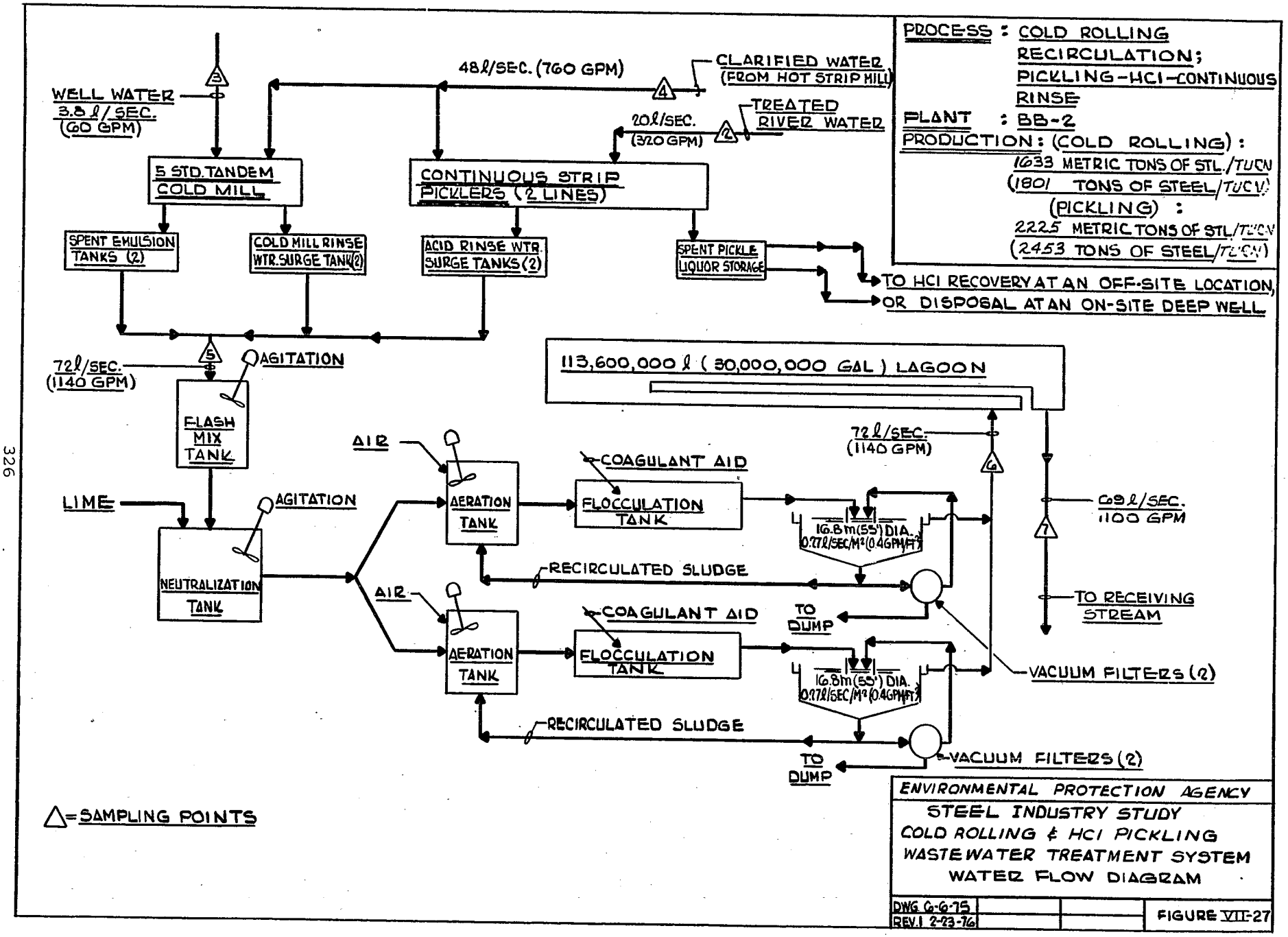
PROCESS : COLD ROLLING RECIRCULATION; PICKLING-HCl-CONTINUOUS RINSE
PLANT : BB-2
PRODUCTION: (COLD ROLLING):
1633 METRIC TONS OF STL./TUCN
(1801 TONS OF STEEL/TUCN)
(PICKLING):
2225 METRIC TONS OF STL./TUCN
(2453 TONS OF STEEL/TUCN)
WELL WATER
3.8 ℓ/SEC.
(60 GPM)
48 ℓ/SEC. (760 GPM)
CLARIFIED WATER
(FROM HOT STRIP MILL)
20 ℓ/SEC.
(320 GPM)
TREATED RIVER WATER
5 STD. TANDEM COLD MILL
CONTINUOUS STRIP PICKLERS (2 LINES)
SPENT EMULSION TANKS (2)
COLD MILL RINSE WTR. SURGE TANK (2)
ACID RINSE WTR. SURGE TANKS (2)
SPENT PICKLE LIQUOR STORAGE
TO HCl RECOVERY AT AN OFF-SITE LOCATION, OR DISPOSAL AT AN ON-SITE DEEP WELL
72 ℓ/SEC.
(1140 GPM)
AGITATION
FLASH MIX TANK
113,600,000 ℓ (30,000,000 GAL) LAGOON
72 ℓ/SEC.
(1140 GPM)
AIR
COAGULANT AID
LIME
AGITATION
AERATION TANK
FLOCCULATION TANK
16.8m (55') DIA.
0.77 ℓ/SEC/M² (0.4 GPM/FT²)
69 ℓ/SEC.
1100 GPM
NEUTRALIZATION TANK
RECIRCULATED SLUDGE
TO DUMP
TO RECEIVING STREAM
AIR
COAGULANT AID
AERATION TANK
FLOCCULATION TANK
16.8m (55') DIA.
0.77 ℓ/SEC/M² (0.4 GPM/FT²)
VACUUM FILTERS (2)
RECIRCULATED SLUDGE
TO DUMP
VACUUM FILTERS (2)
△=SAMPLING POINTS
ENVIRONMENTAL PROTECTION AGENCY
STEEL INDUSTRY STUDY
COLD ROLLING & HCl PICKLING
WASTEWATER TREATMENT SYSTEM
WATER FLOW DIAGRAM
DWG 6-6-75
REV. 1 2-23-76
FIGURE VII-27

PROCESS: PICKLING H_2SO_4-CONTINUOUS CONCENTRATES & RINSES

PLANT: QQ-2

PRODUCTION: 922 METRIC TONS/TURN (1016 TONS/TURN)

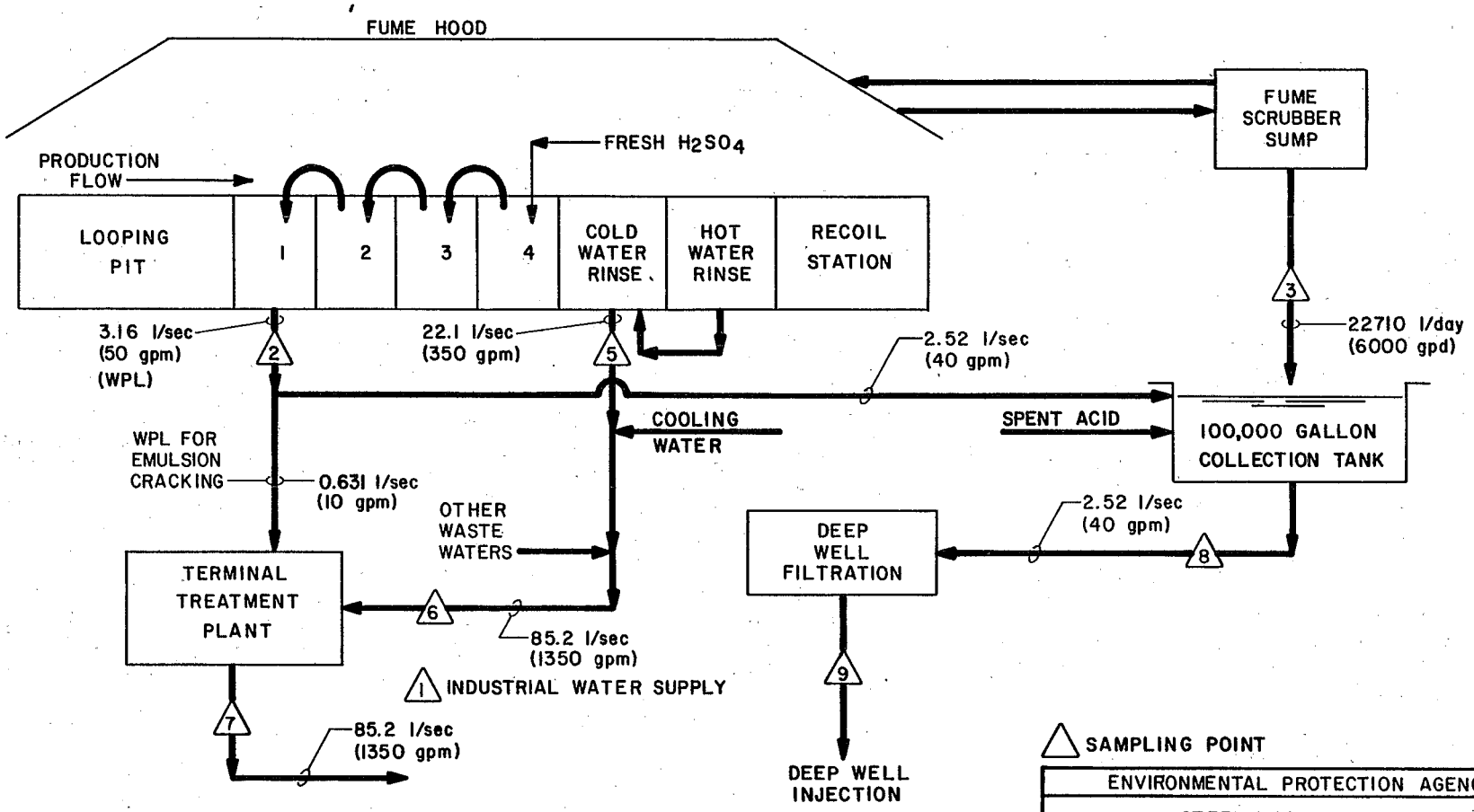

ENVIRONMENTAL PROTECTION AGENCY

STEEL INDUSTRY STUDY
CONTINUOUS SULFURIC PICKLING
WASTEWATER TREATMENT SYSTEM
WATER FLOW DIAGRAM

Dwn. 3/30/79

FIGURE VII-28

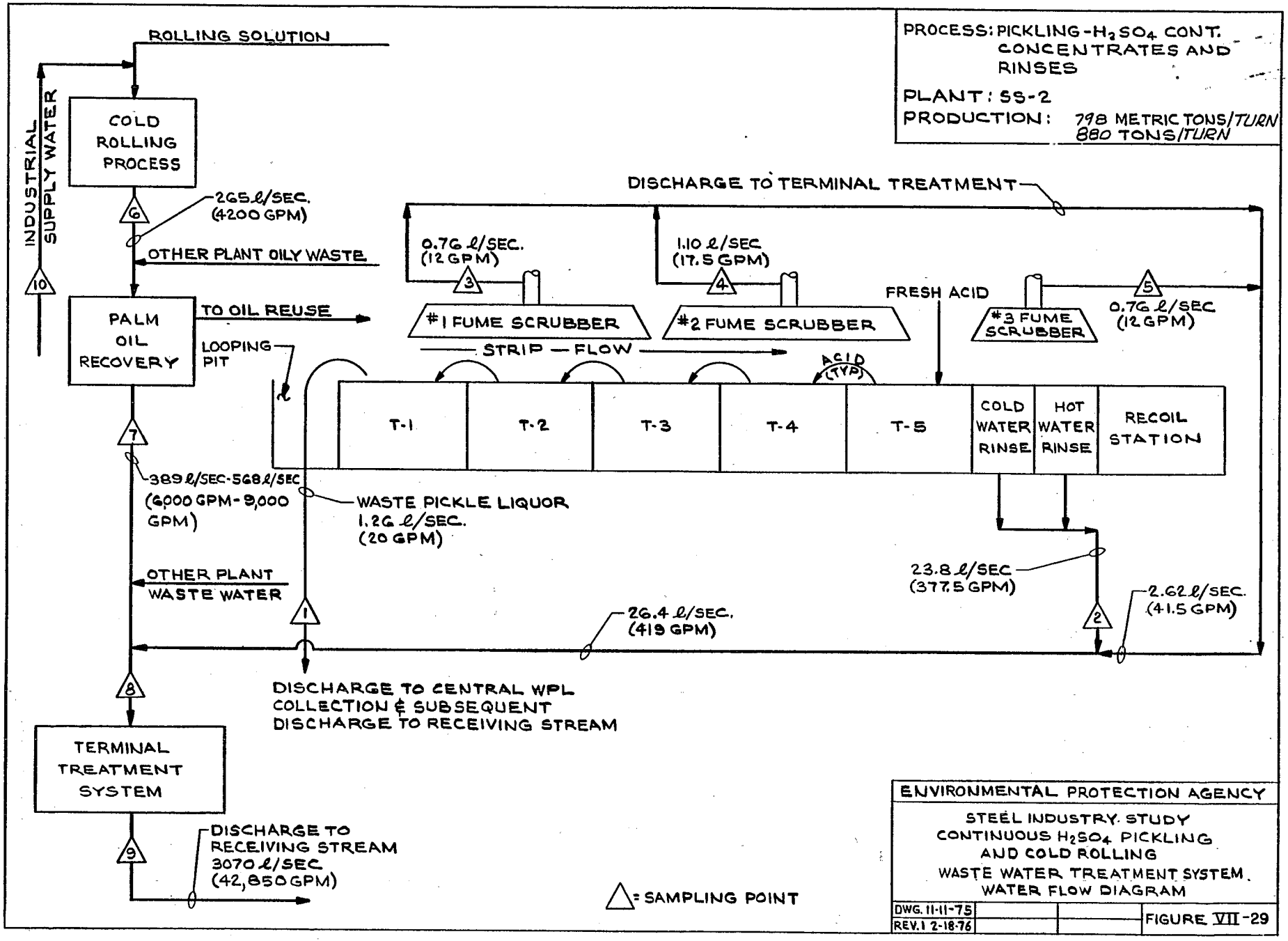
PROCESS: PICKLING-H_2SO_4 CONT. CONCENTRATES AND RINSES
PLANT: SS-2
PRODUCTION: 798 METRIC TONS/TURN
880 TONS/TURN
ROLLING SOLUTION
INDUSTRIAL SUPPLY WATER
COLD ROLLING PROCESS
265 ℓ/SEC. (4200 GPM)
OTHER PLANT OILY WASTE
PALM OIL RECOVERY
TO OIL REUSE
LOOPING PIT
DISCHARGE TO TERMINAL TREATMENT
0.76 ℓ/SEC. (12 GPM)
1.10 ℓ/SEC (17.5 GPM)
#1 FUME SCRUBBER
#2 FUME SCRUBBER
#3 FUME SCRUBBER
FRESH ACID
0.76 ℓ/SEC (12 GPM)
STRIP — FLOW
ACID (TYP)
T-1
T-2
T-3
T-4
T-5
COLD WATER RINSE
HOT WATER RINSE
RECOIL STATION
389 ℓ/SEC-568 ℓ/SEC (6,000 GPM-9,000 GPM)
WASTE PICKLE LIQUOR 1.26 ℓ/SEC. (20 GPM)
23.8 ℓ/SEC (377.5 GPM)
2.62 ℓ/SEC. (41.5 GPM)
OTHER PLANT WASTE WATER
26.4 ℓ/SEC. (419 GPM)
DISCHARGE TO CENTRAL WPL COLLECTION & SUBSEQUENT DISCHARGE TO RECEIVING STREAM
TERMINAL TREATMENT SYSTEM
DISCHARGE TO RECEIVING STREAM 3070 ℓ/SEC (42,850 GPM)
= SAMPLING POINT
ENVIRONMENTAL PROTECTION AGENCY
STEEL INDUSTRY STUDY
CONTINUOUS H_2SO_4 PICKLING AND COLD ROLLING
WASTE WATER TREATMENT SYSTEM
WATER FLOW DIAGRAM
DWG. 11-11-75
REV. 1 2-18-76
FIGURE VII-29

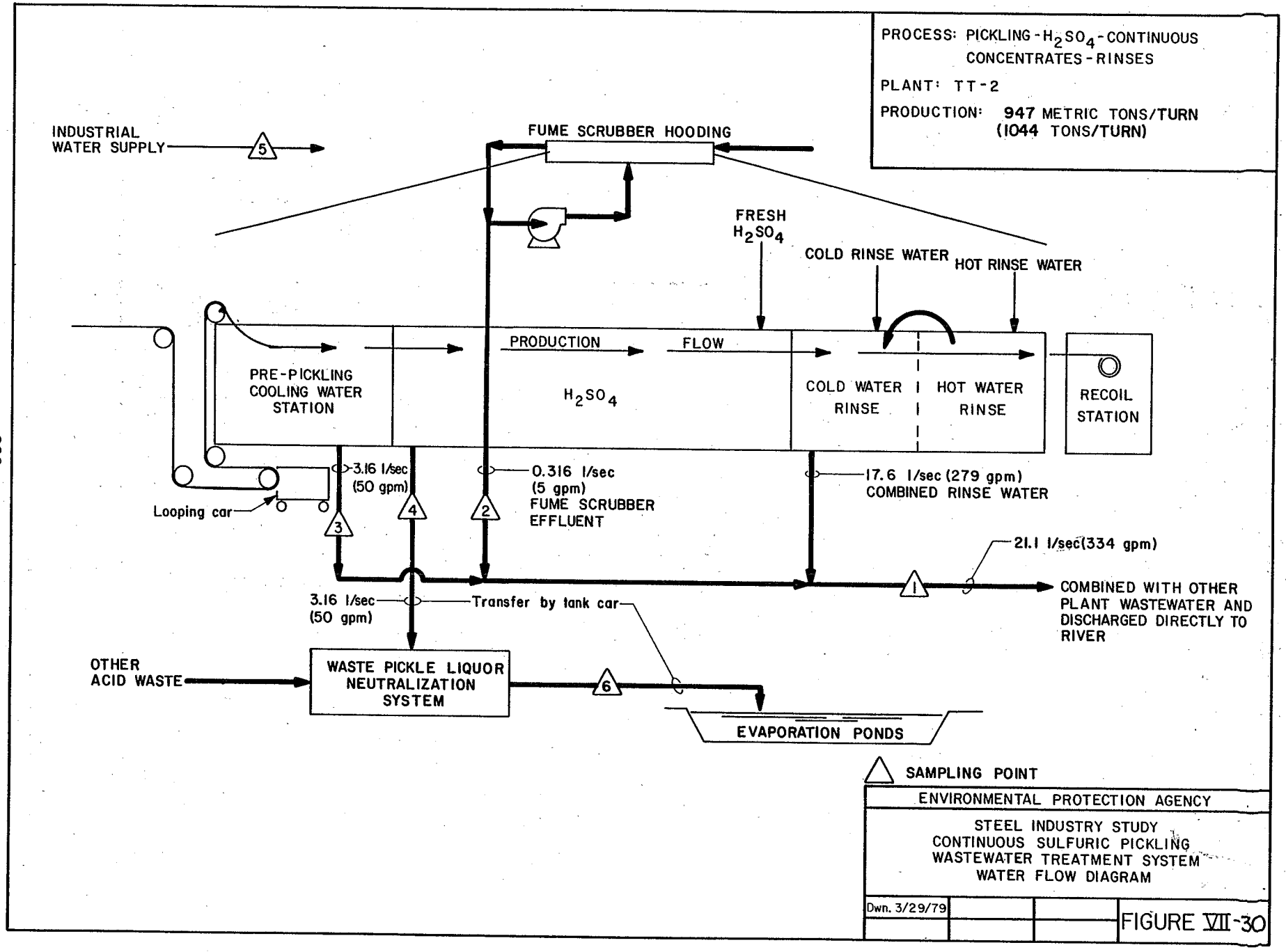
PROCESS: PICKLING - H_2SO_4 - CONTINUOUS
CONCENTRATES - RINSES
PLANT: TT-2
PRODUCTION: 947 METRIC TONS/TURN
(1044 TONS/TURN)
INDUSTRIAL WATER SUPPLY
5
FUME SCRUBBER HOODING
FRESH H_2SO_4
COLD RINSE WATER
HOT RINSE WATER
PRE-PICKLING COOLING WATER STATION
PRODUCTION
FLOW
H_2SO_4
COLD WATER RINSE
HOT WATER RINSE
RECOIL STATION
Looping car
3.16 l/sec (50 gpm)
0.316 l/sec (5 gpm) FUME SCRUBBER EFFLUENT
17.6 l/sec (279 gpm) COMBINED RINSE WATER
3
4
2
21.1 l/sec (334 gpm)
1
COMBINED WITH OTHER PLANT WASTEWATER AND DISCHARGED DIRECTLY TO RIVER
3.16 l/sec (50 gpm)
Transfer by tank car
OTHER ACID WASTE
WASTE PICKLE LIQUOR NEUTRALIZATION SYSTEM
6
EVAPORATION PONDS
SAMPLING POINT
ENVIRONMENTAL PROTECTION AGENCY
STEEL INDUSTRY STUDY
CONTINUOUS SULFURIC PICKLING
WASTEWATER TREATMENT SYSTEM
WATER FLOW DIAGRAM
Dwn. 3/29/79
FIGURE VII-30

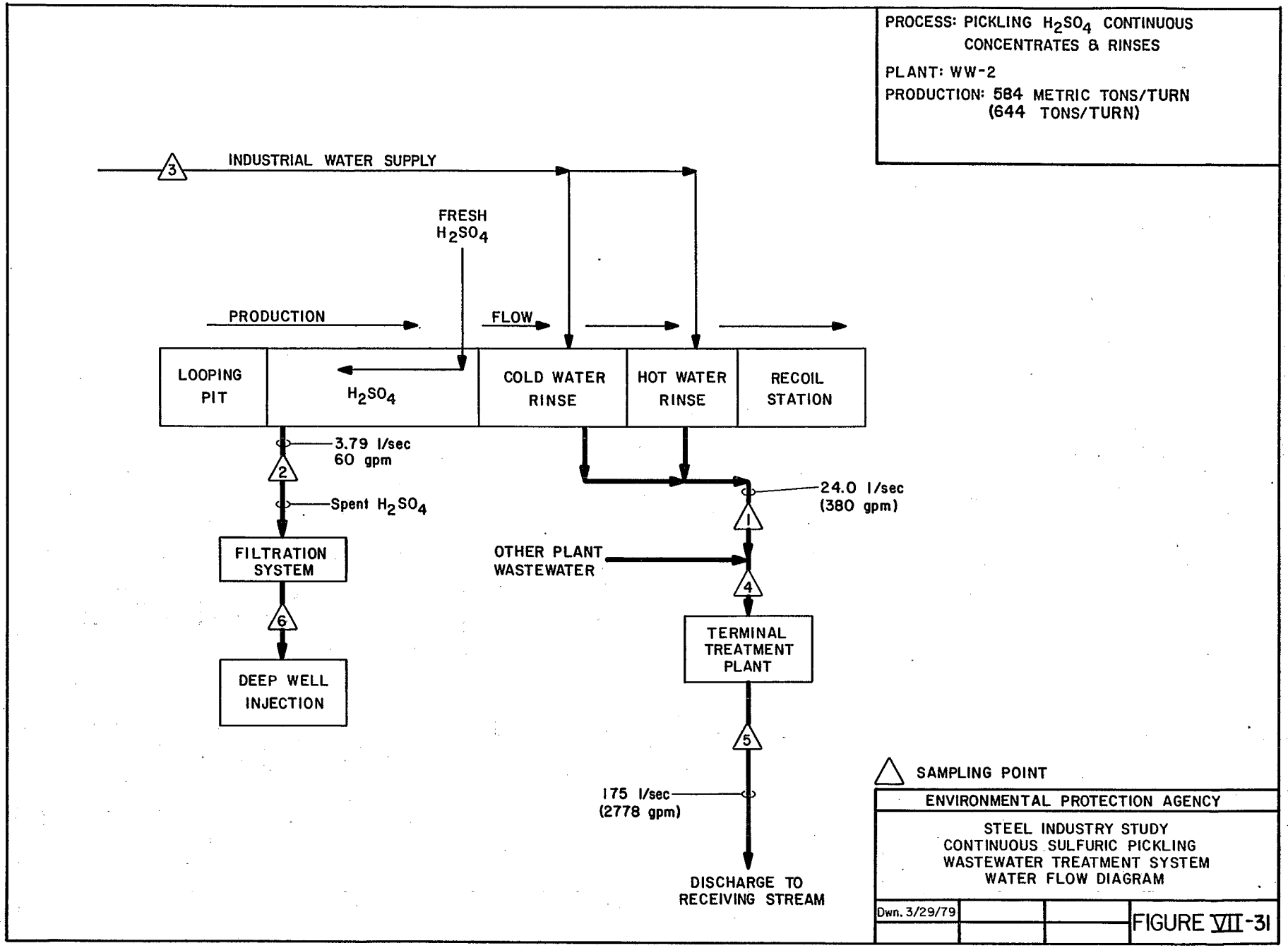
PROCESS: PICKLING H_2SO_4 CONTINUOUS CONCENTRATES & RINSES
PLANT: WW-2
PRODUCTION: 584 METRIC TONS/TURN (644 TONS/TURN)
INDUSTRIAL WATER SUPPLY
FRESH H_2SO_4
PRODUCTION
FLOW
LOOPING PIT
H_2SO_4
COLD WATER RINSE
HOT WATER RINSE
RECOIL STATION
3.79 l/sec 60 gpm
Spent H_2SO_4
24.0 l/sec (380 gpm)
FILTRATION SYSTEM
OTHER PLANT WASTEWATER
DEEP WELL INJECTION
TERMINAL TREATMENT PLANT
175 l/sec (2778 gpm)
DISCHARGE TO RECEIVING STREAM
SAMPLING POINT
ENVIRONMENTAL PROTECTION AGENCY
STEEL INDUSTRY STUDY
CONTINUOUS SULFURIC PICKLING
WASTEWATER TREATMENT SYSTEM
WATER FLOW DIAGRAM
Dwn. 3/29/79
FIGURE VII-31

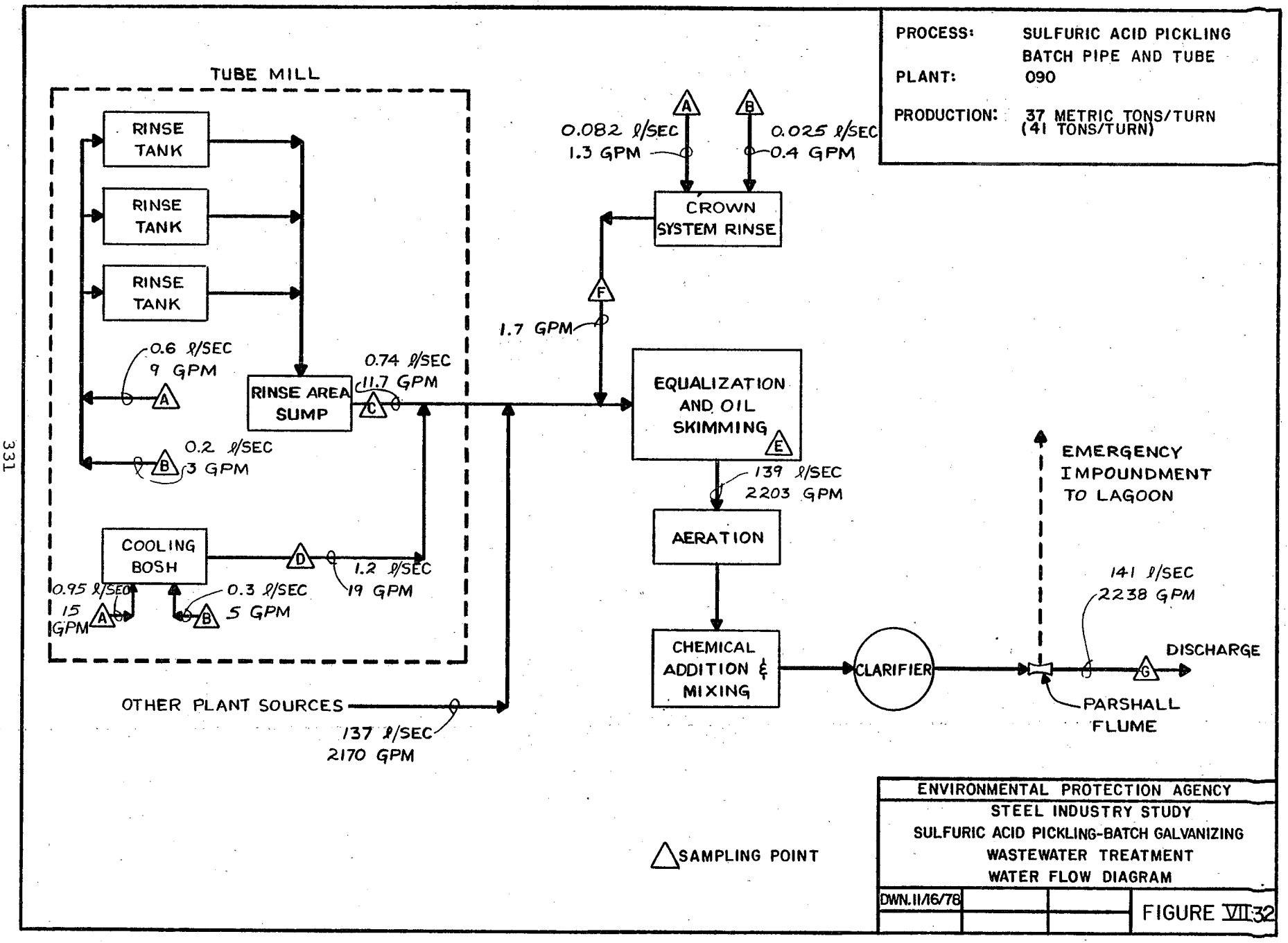
PROCESS: SULFURIC ACID PICKLING BATCH PIPE AND TUBE
PLANT: 090
PRODUCTION: 37 METRIC TONS/TURN (41 TONS/TURN)
TUBE MILL
RINSE TANK
RINSE TANK
RINSE TANK
0.6 ℓ/SEC 9 GPM
A
RINSE AREA SUMP
0.74 ℓ/SEC 11.7 GPM
C
0.2 ℓ/SEC 3 GPM
B
COOLING BOSH
D
1.2 ℓ/SEC 19 GPM
0.95 ℓ/SEC 15 GPM
A
0.3 ℓ/SEC 5 GPM
B
OTHER PLANT SOURCES
137 ℓ/SEC 2170 GPM
0.082 ℓ/SEC 1.3 GPM
A
0.025 ℓ/SEC 0.4 GPM
B
CROWN SYSTEM RINSE
F
1.7 GPM
EQUALIZATION AND OIL SKIMMING
E
139 ℓ/SEC 2203 GPM
AERATION
CHEMICAL ADDITION & MIXING
CLARIFIER
EMERGENCY IMPOUNDMENT TO LAGOON
141 ℓ/SEC 2238 GPM
G
DISCHARGE
PARSHALL FLUME
SAMPLING POINT
ENVIRONMENTAL PROTECTION AGENCY
STEEL INDUSTRY STUDY
SULFURIC ACID PICKLING-BATCH GALVANIZING
WASTEWATER TREATMENT
WATER FLOW DIAGRAM
DWN. 11/16/78
FIGURE VII 32

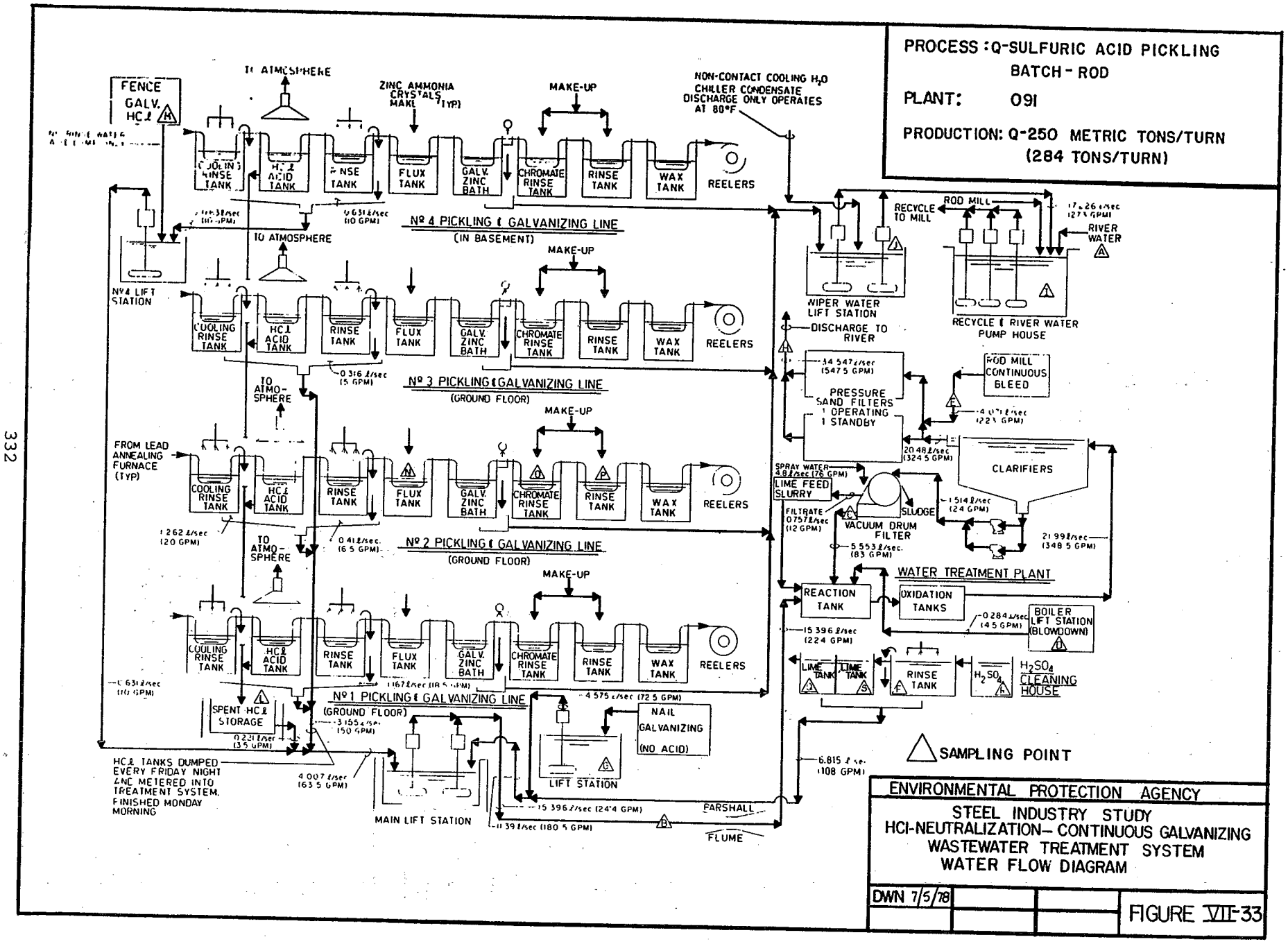
PROCESS: Q-SULFURIC ACID PICKLING
BATCH - ROD
PLANT: 091
PRODUCTION: Q-250 METRIC TONS/TURN
(284 TONS/TURN)
FENCE
GALV. HCℓ
TO ATMOSPHERE
ZINC AMMONIA CRYSTALS MAKE (TYP)
MAKE-UP
NON-CONTACT COOLING H2O
CHILLER CONDENSATE
DISCHARGE ONLY OPERATES AT 80°F
COOLING RINSE TANK
HCℓ ACID TANK
RINSE TANK
FLUX TANK
GALV. ZINC BATH
CHROMATE RINSE TANK
WAX TANK
REELERS
Nº 4 PICKLING & GALVANIZING LINE
(IN BASEMENT)
Nº 4 LIFT STATION
Nº 3 PICKLING & GALVANIZING LINE
(GROUND FLOOR)
TO ATMOSPHERE
FROM LEAD ANNEALING FURNACE (TYP)
Nº 2 PICKLING & GALVANIZING LINE
(GROUND FLOOR)
Nº 1 PICKLING & GALVANIZING LINE
(GROUND FLOOR)
SPENT HCℓ STORAGE
HCℓ TANKS DUMPED EVERY FRIDAY NIGHT ZNC METERED INTO TREATMENT SYSTEM. FINISHED MONDAY MORNING
MAIN LIFT STATION
NAIL GALVANIZING (NO ACID)
LIFT STATION
FARSHALL FLUME
RECYCLE TO MILL
ROD MILL
RIVER WATER
WIPER WATER LIFT STATION
RECYCLE & RIVER WATER PUMP HOUSE
DISCHARGE TO RIVER
PRESSURE SAND FILTERS
1 OPERATING
1 STANDBY
ROD MILL CONTINUOUS BLEED
CLARIFIERS
SPRAY WATER
LIME FEED SLURRY
FILTRATE
SLUDGE
VACUUM DRUM FILTER
WATER TREATMENT PLANT
REACTION TANK
OXIDATION TANKS
BOILER LIFT STATION (BLOWDOWN)
LIME TANK
RINSE TANK
H2SO4 CLEANING HOUSE
SAMPLING POINT
ENVIRONMENTAL PROTECTION AGENCY
STEEL INDUSTRY STUDY
HCl-NEUTRALIZATION- CONTINUOUS GALVANIZING
WASTEWATER TREATMENT SYSTEM
WATER FLOW DIAGRAM
DWN 7/5/78
FIGURE VII-33

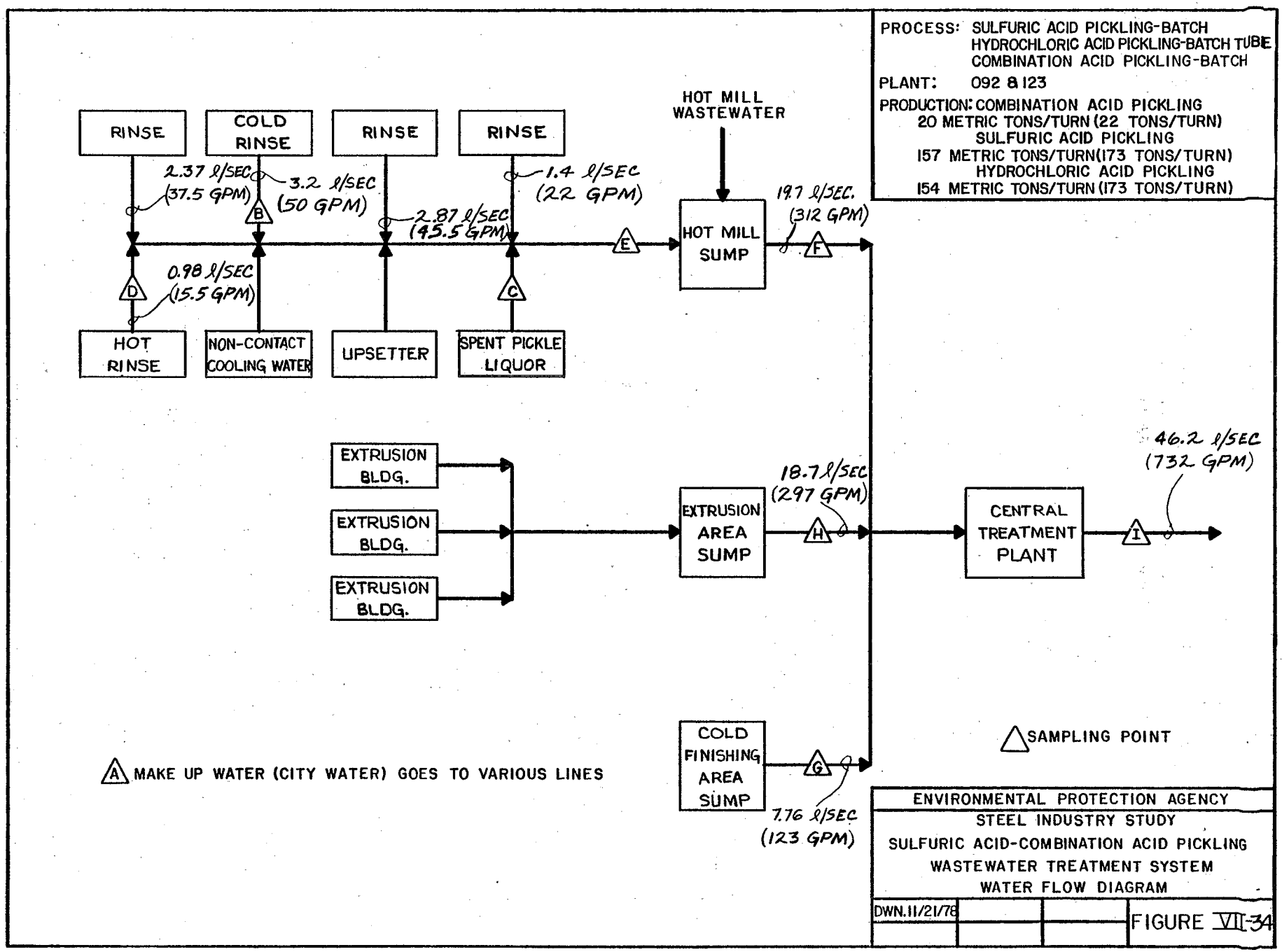
PROCESS: SULFURIC ACID PICKLING-BATCH
HYDROCHLORIC ACID PICKLING-BATCH TUBE
COMBINATION ACID PICKLING-BATCH
PLANT: 092 & 123
PRODUCTION: COMBINATION ACID PICKLING
20 METRIC TONS/TURN (22 TONS/TURN)
SULFURIC ACID PICKLING
157 METRIC TONS/TURN (173 TONS/TURN)
HYDROCHLORIC ACID PICKLING
154 METRIC TONS/TURN (173 TONS/TURN)
RINSE
COLD RINSE
RINSE
RINSE
HOT MILL WASTEWATER
2.37 l/SEC (37.5 GPM)
3.2 l/SEC (50 GPM)
2.87 l/SEC (45.5 GPM)
1.4 l/SEC (22 GPM)
19.7 l/SEC. (312 GPM)
0.98 l/SEC (15.5 GPM)
HOT MILL SUMP
HOT RINSE
NON-CONTACT COOLING WATER
UPSETTER
SPENT PICKLE LIQUOR
EXTRUSION BLDG.
EXTRUSION BLDG.
EXTRUSION BLDG.
EXTRUSION AREA SUMP
18.7 l/SEC (297 GPM)
CENTRAL TREATMENT PLANT
46.2 l/SEC (732 GPM)
COLD FINISHING AREA SUMP
7.76 l/SEC (123 GPM)
SAMPLING POINT
MAKE UP WATER (CITY WATER) GOES TO VARIOUS LINES
ENVIRONMENTAL PROTECTION AGENCY
STEEL INDUSTRY STUDY
SULFURIC ACID-COMBINATION ACID PICKLING
WASTEWATER TREATMENT SYSTEM
WATER FLOW DIAGRAM
DWN. 11/21/78
FIGURE VII-34

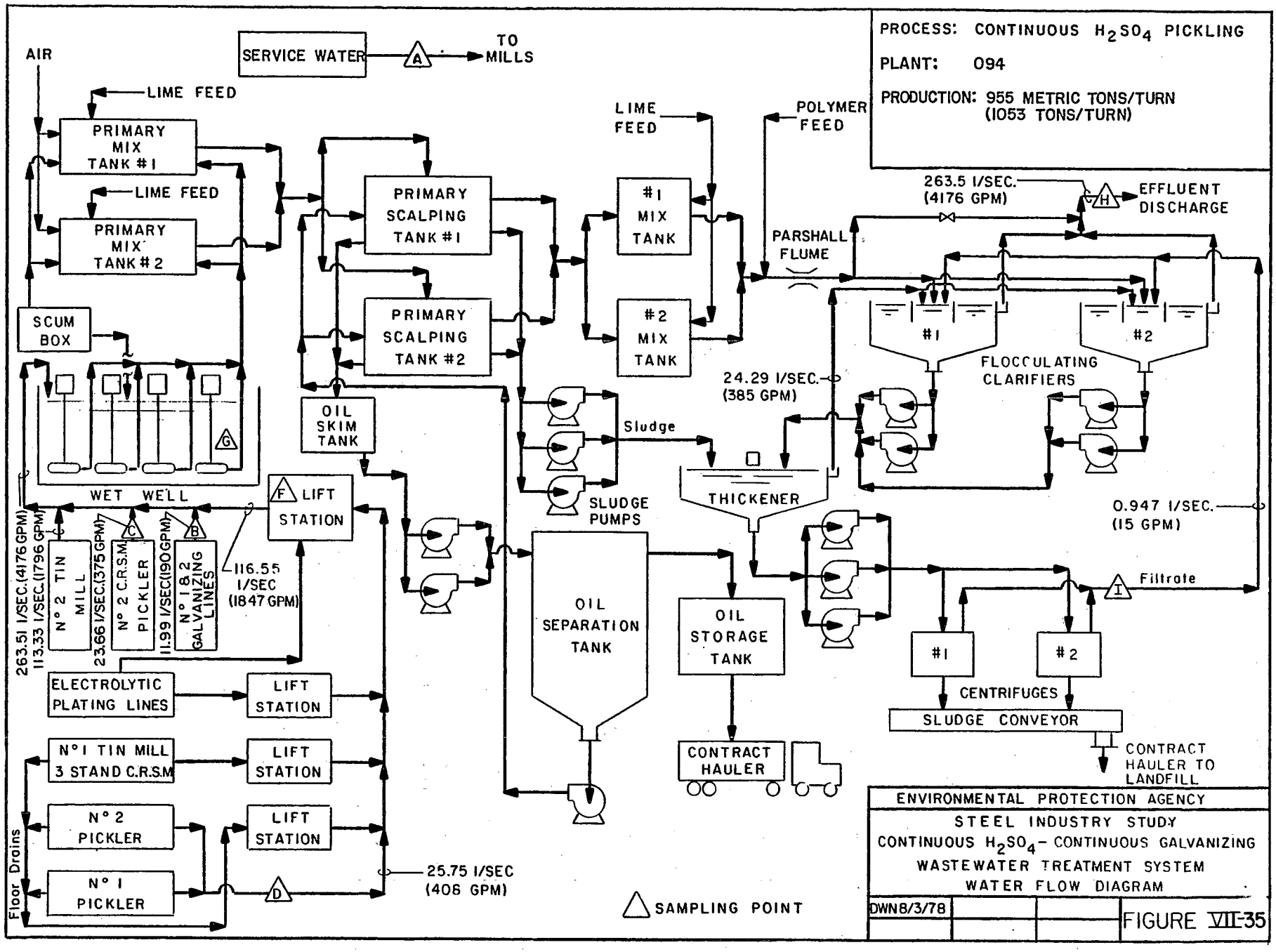
PROCESS: CONTINUOUS H_2SO_4 PICKLING
PLANT: 094
PRODUCTION: 955 METRIC TONS/TURN (1053 TONS/TURN)
AIR
SERVICE WATER
A
TO MILLS
LIME FEED
PRIMARY MIX TANK #1
LIME FEED
PRIMARY MIX TANK #2
SCUM BOX
G
WET WELL
263.51 l/SEC.(4176 GPM)
113.33 l/SEC.(1796 GPM)
N° 2 TIN MILL
23.66 l/SEC.(375 GPM)
C
N° 2 C.R.S.M. PICKLER
11.99 l/SEC.(190 GPM)
B
N° 1 & 2 GALVANIZING LINES
116.55 l/SEC (1847 GPM)
F
LIFT STATION
ELECTROLYTIC PLATING LINES
LIFT STATION
N° 1 TIN MILL 3 STAND C.R.S.M
LIFT STATION
N° 2 PICKLER
LIFT STATION
N° 1 PICKLER
D
Floor Drains
25.75 l/SEC (406 GPM)
OIL SKIM TANK
PRIMARY SCALPING TANK #1
PRIMARY SCALPING TANK #2
LIME FEED
#1 MIX TANK
#2 MIX TANK
POLYMER FEED
PARSHALL FLUME
263.5 l/SEC. (4176 GPM)
H
EFFLUENT DISCHARGE
#1
#2
FLOCCULATING CLARIFIERS
24.29 l/SEC. (385 GPM)
Sludge
SLUDGE PUMPS
THICKENER
0.947 l/SEC. (15 GPM)
I
Filtrate
OIL SEPARATION TANK
OIL STORAGE TANK
CONTRACT HAULER
#1
#2
CENTRIFUGES
SLUDGE CONVEYOR
CONTRACT HAULER TO LANDFILL
SAMPLING POINT
ENVIRONMENTAL PROTECTION AGENCY
STEEL INDUSTRY STUDY
CONTINUOUS H_2SO_4 - CONTINUOUS GALVANIZING
WASTEWATER TREATMENT SYSTEM
WATER FLOW DIAGRAM
DWN 8/3/78
FIGURE VII-35

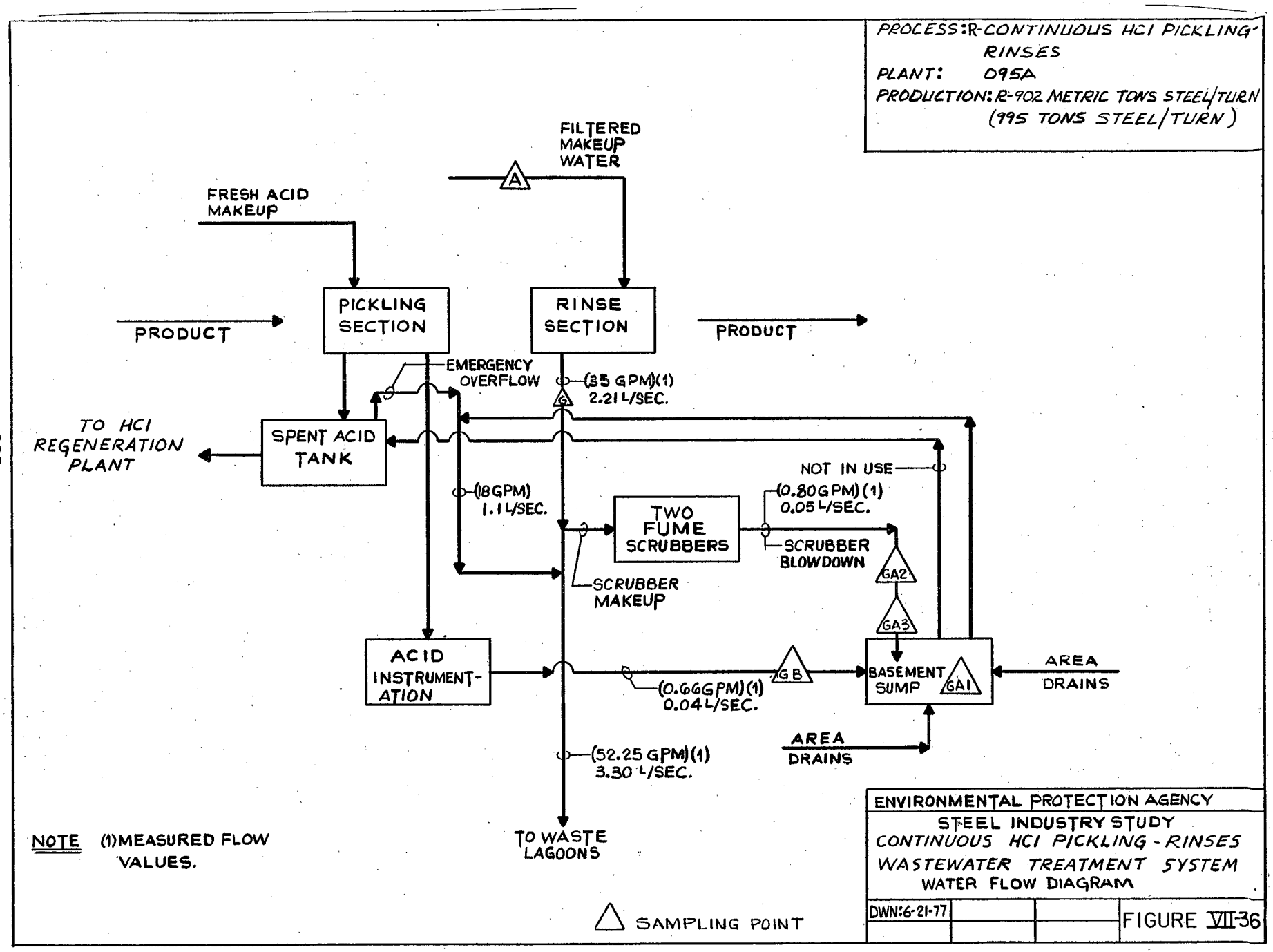
PROCESS: R-CONTINUOUS HCl PICKLING-RINSES
PLANT: 095A
PRODUCTION: R-902 METRIC TONS STEEL/TURN (995 TONS STEEL/TURN)
FILTERED MAKEUP WATER
A
FRESH ACID MAKEUP
PICKLING SECTION
RINSE SECTION
PRODUCT
PRODUCT
EMERGENCY OVERFLOW
(35 GPM)(1) 2.21 L/SEC.
G
TO HCl REGENERATION PLANT
SPENT ACID TANK
(18 GPM) 1.1 L/SEC.
NOT IN USE
(0.80 GPM)(1) 0.05 L/SEC.
TWO FUME SCRUBBERS
SCRUBBER BLOWDOWN
GA2
GA3
SCRUBBER MAKEUP
ACID INSTRUMENTATION
(0.66 GPM)(1) 0.04 L/SEC.
GB
BASEMENT SUMP
GA1
AREA DRAINS
AREA DRAINS
(52.25 GPM)(1) 3.30 L/SEC.
TO WASTE LAGOONS
NOTE (1) MEASURED FLOW VALUES.
SAMPLING POINT
ENVIRONMENTAL PROTECTION AGENCY
STEEL INDUSTRY STUDY
CONTINUOUS HCl PICKLING - RINSES
WASTEWATER TREATMENT SYSTEM
WATER FLOW DIAGRAM
DWN: 6-21-77
FIGURE VII-36

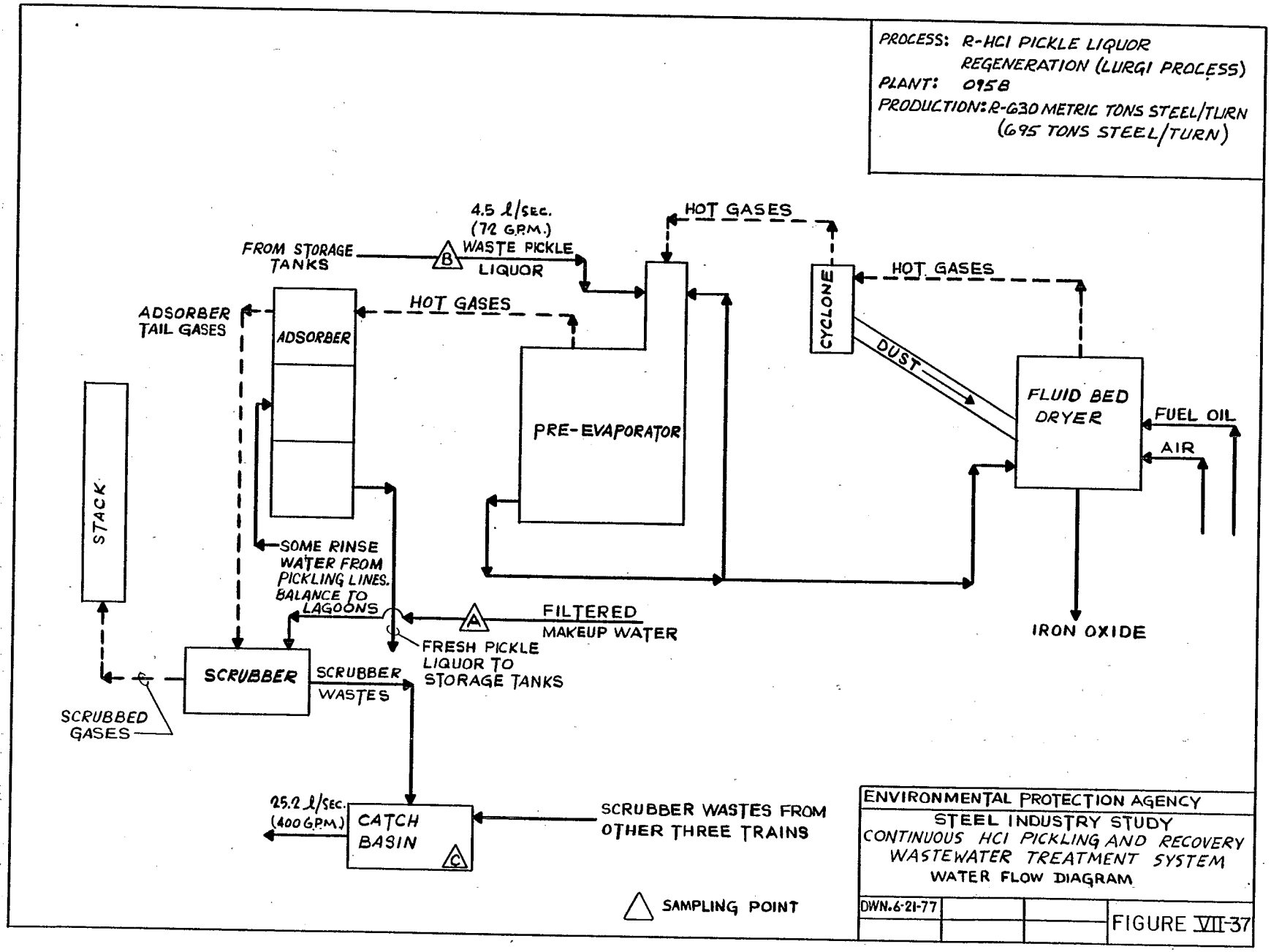
PROCESS: R-HCl PICKLE LIQUOR REGENERATION (LURGI PROCESS)
PLANT: 095B
PRODUCTION: R-630 METRIC TONS STEEL/TURN (695 TONS STEEL/TURN)
4.5 ℓ/SEC. (72 G.P.M.)
WASTE PICKLE LIQUOR
FROM STORAGE TANKS
B
HOT GASES
HOT GASES
HOT GASES
ADSORBER TAIL GASES
ADSORBER
PRE-EVAPORATOR
CYCLONE
DUST
FLUID BED DRYER
FUEL OIL
AIR
STACK
SOME RINSE WATER FROM PICKLING LINES. BALANCE TO LAGOONS
A
FILTERED MAKEUP WATER
FRESH PICKLE LIQUOR TO STORAGE TANKS
IRON OXIDE
SCRUBBER
SCRUBBER WASTES
SCRUBBED GASES
25.2 ℓ/SEC. (400 G.P.M.)
CATCH BASIN
C
SCRUBBER WASTES FROM OTHER THREE TRAINS
SAMPLING POINT
ENVIRONMENTAL PROTECTION AGENCY
STEEL INDUSTRY STUDY
CONTINUOUS HCl PICKLING AND RECOVERY WASTEWATER TREATMENT SYSTEM
WATER FLOW DIAGRAM
DWN. 6-21-77
FIGURE VII-37

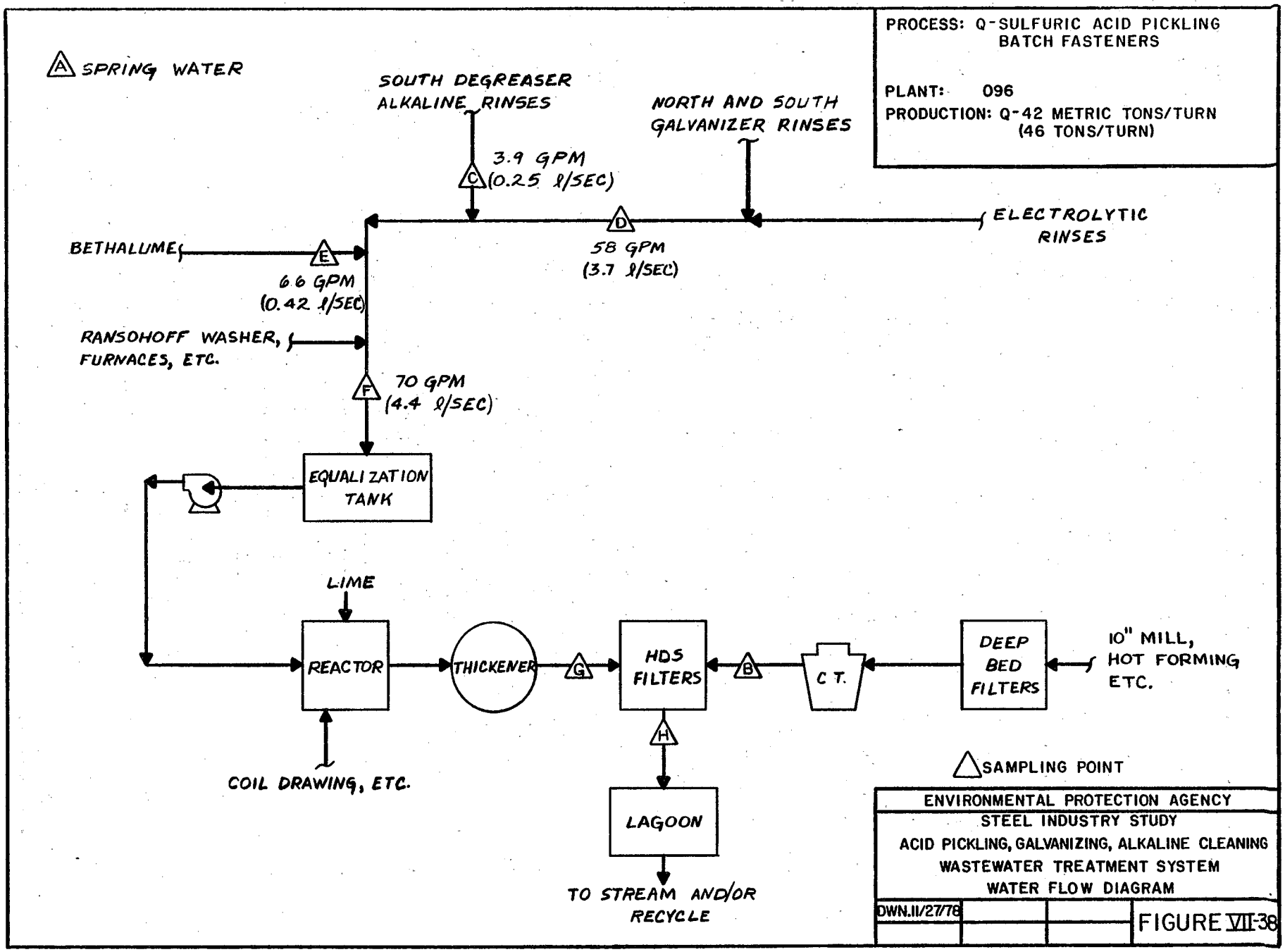
PROCESS: Q-SULFURIC ACID PICKLING BATCH FASTENERS
PLANT: 096
PRODUCTION: Q-42 METRIC TONS/TURN (46 TONS/TURN)
A SPRING WATER
SOUTH DEGREASER ALKALINE RINSES
NORTH AND SOUTH GALVANIZER RINSES
C 3.9 GPM (0.25 ℓ/SEC)
D 58 GPM (3.7 ℓ/SEC)
ELECTROLYTIC RINSES
BETHALUME
E 6.6 GPM (0.42 ℓ/SEC)
RANSOHOFF WASHER, FURNACES, ETC.
F 70 GPM (4.4 ℓ/SEC)
EQUALIZATION TANK
LIME
REACTOR
THICKENER
G
HDS FILTERS
B
C.T.
DEEP BED FILTERS
10" MILL, HOT FORMING ETC.
H
COIL DRAWING, ETC.
LAGOON
TO STREAM AND/OR RECYCLE
SAMPLING POINT
ENVIRONMENTAL PROTECTION AGENCY
STEEL INDUSTRY STUDY
ACID PICKLING, GALVANIZING, ALKALINE CLEANING
WASTEWATER TREATMENT SYSTEM
WATER FLOW DIAGRAM
DWN.11/27/78
FIGURE VII-38

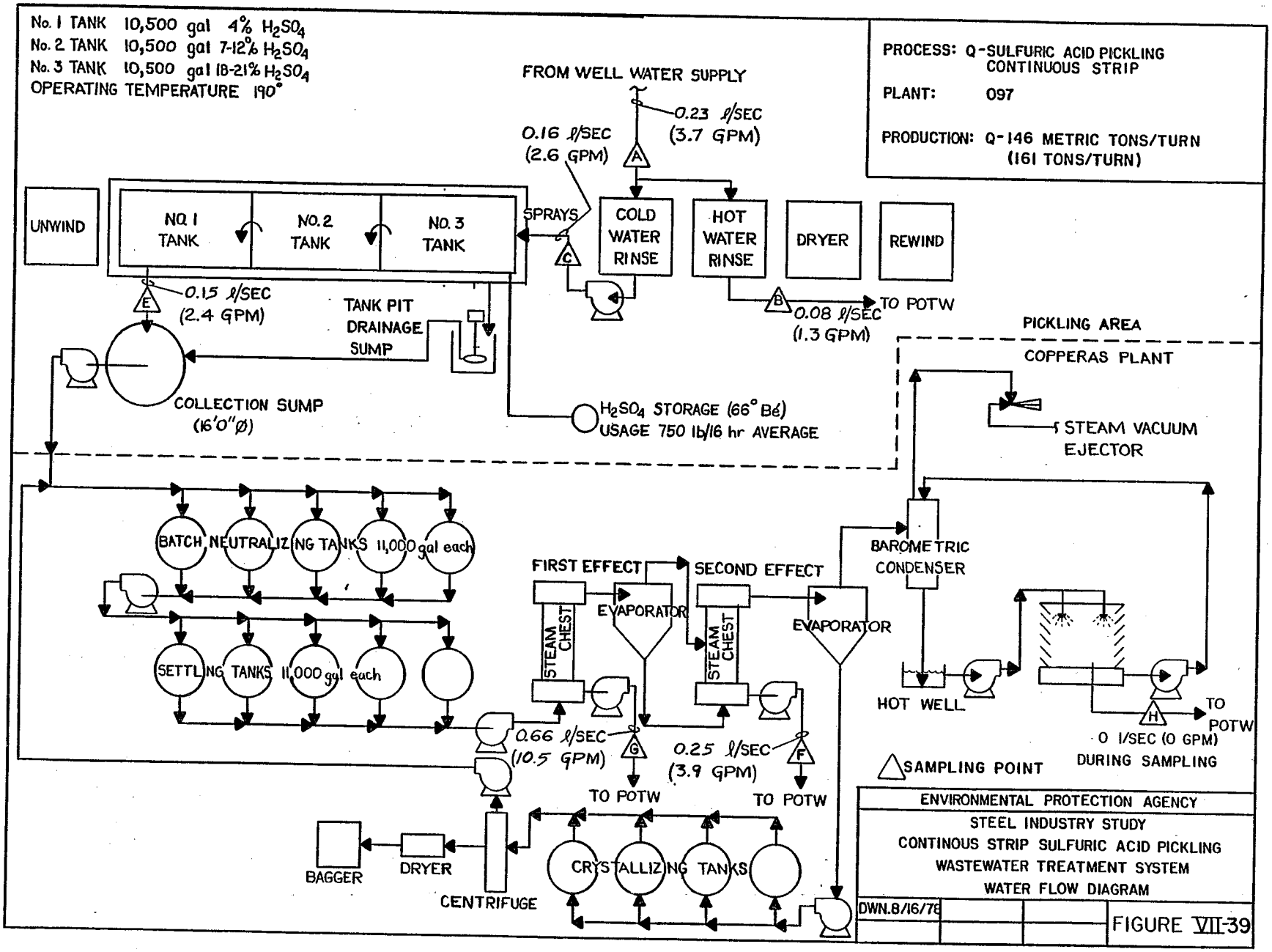
No. 1 TANK 10,500 gal 4% H_2SO_4
No. 2 TANK 10,500 gal 7-12% H_2SO_4
No. 3 TANK 10,500 gal 18-21% H_2SO_4
OPERATING TEMPERATURE 190°
PROCESS: Q-SULFURIC ACID PICKLING CONTINUOUS STRIP
PLANT: 097
PRODUCTION: Q-146 METRIC TONS/TURN (161 TONS/TURN)
FROM WELL WATER SUPPLY
0.23 l/SEC (3.7 GPM)
0.16 l/SEC (2.6 GPM)
A
UNWIND
NO. 1 TANK
NO. 2 TANK
NO. 3 TANK
SPRAYS
C
COLD WATER RINSE
HOT WATER RINSE
DRYER
REWIND
B
0.08 l/SEC (1.3 GPM)
TO POTW
E
0.15 l/SEC (2.4 GPM)
TANK PIT DRAINAGE SUMP
COLLECTION SUMP (16'0"Ø)
H_2SO_4 STORAGE (66° Bé)
USAGE 750 lb/16 hr AVERAGE
PICKLING AREA
COPPERAS PLANT
STEAM VACUUM EJECTOR
BATCH NEUTRALIZING TANKS 11,000 gal each
SETTLING TANKS 11,000 gal each
FIRST EFFECT
SECOND EFFECT
STEAM CHEST
EVAPORATOR
STEAM CHEST
EVAPORATOR
BAROMETRIC CONDENSER
HOT WELL
H
TO POTW
0 l/SEC (0 GPM) DURING SAMPLING
0.66 l/SEC (10.5 GPM)
G
0.25 l/SEC (3.9 GPM)
F
TO POTW
TO POTW
SAMPLING POINT
BAGGER
DRYER
CENTRIFUGE
CRYSTALLIZING TANKS
ENVIRONMENTAL PROTECTION AGENCY
STEEL INDUSTRY STUDY
CONTINOUS STRIP SULFURIC ACID PICKLING
WASTEWATER TREATMENT SYSTEM
WATER FLOW DIAGRAM
DWN.8/16/78
FIGURE VII-39

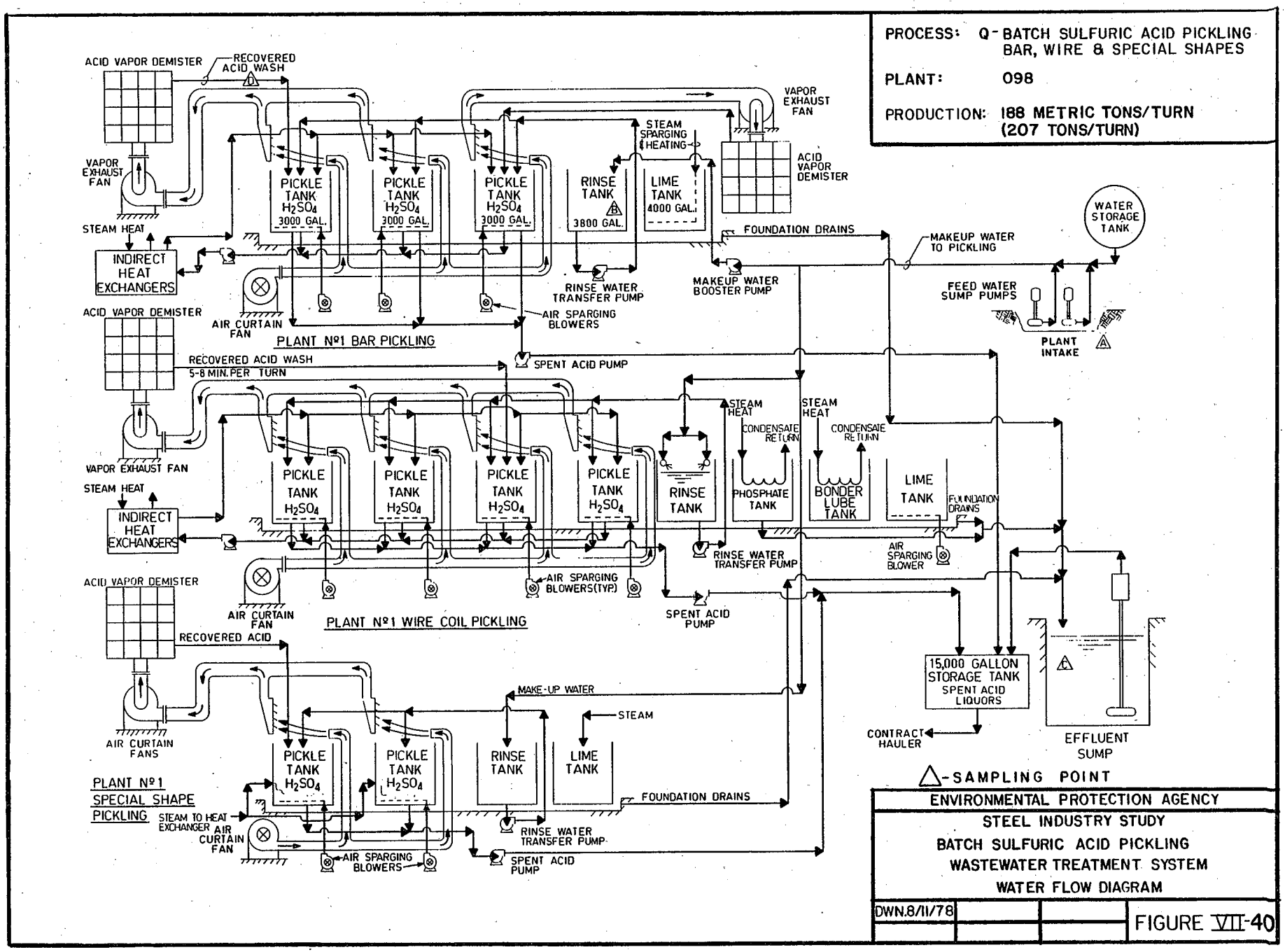
PROCESS: Q-BATCH SULFURIC ACID PICKLING BAR, WIRE & SPECIAL SHAPES
PLANT: 098
PRODUCTION: 188 METRIC TONS/TURN (207 TONS/TURN)
ACID VAPOR DEMISTER
RECOVERED ACID WASH
VAPOR EXHAUST FAN
STEAM HEAT
INDIRECT HEAT EXCHANGERS
PICKLE TANK H_2SO_4 3000 GAL.
RINSE TANK 3800 GAL.
LIME TANK 4000 GAL.
STEAM SPARGING & HEATING
FOUNDATION DRAINS
MAKEUP WATER TO PICKLING
WATER STORAGE TANK
RINSE WATER TRANSFER PUMP
MAKEUP WATER BOOSTER PUMP
FEED WATER SUMP PUMPS
PLANT INTAKE
AIR CURTAIN FAN
AIR SPARGING BLOWERS
PLANT Nº1 BAR PICKLING
RECOVERED ACID WASH 5-8 MIN. PER TURN
SPENT ACID PUMP
STEAM HEAT
CONDENSATE RETURN
PHOSPHATE TANK
BONDER LUBE TANK
AIR SPARGING BLOWER
AIR SPARGING BLOWERS(TYP)
PLANT Nº1 WIRE COIL PICKLING
RECOVERED ACID
15,000 GALLON STORAGE TANK SPENT ACID LIQUORS
CONTRACT HAULER
EFFLUENT SUMP
MAKE-UP WATER
STEAM
AIR CURTAIN FANS
PLANT Nº1 SPECIAL SHAPE PICKLING
STEAM TO HEAT EXCHANGER
△-SAMPLING POINT
ENVIRONMENTAL PROTECTION AGENCY
STEEL INDUSTRY STUDY
BATCH SULFURIC ACID PICKLING
WASTEWATER TREATMENT SYSTEM
WATER FLOW DIAGRAM
DWN.8/11/78
FIGURE VII-40

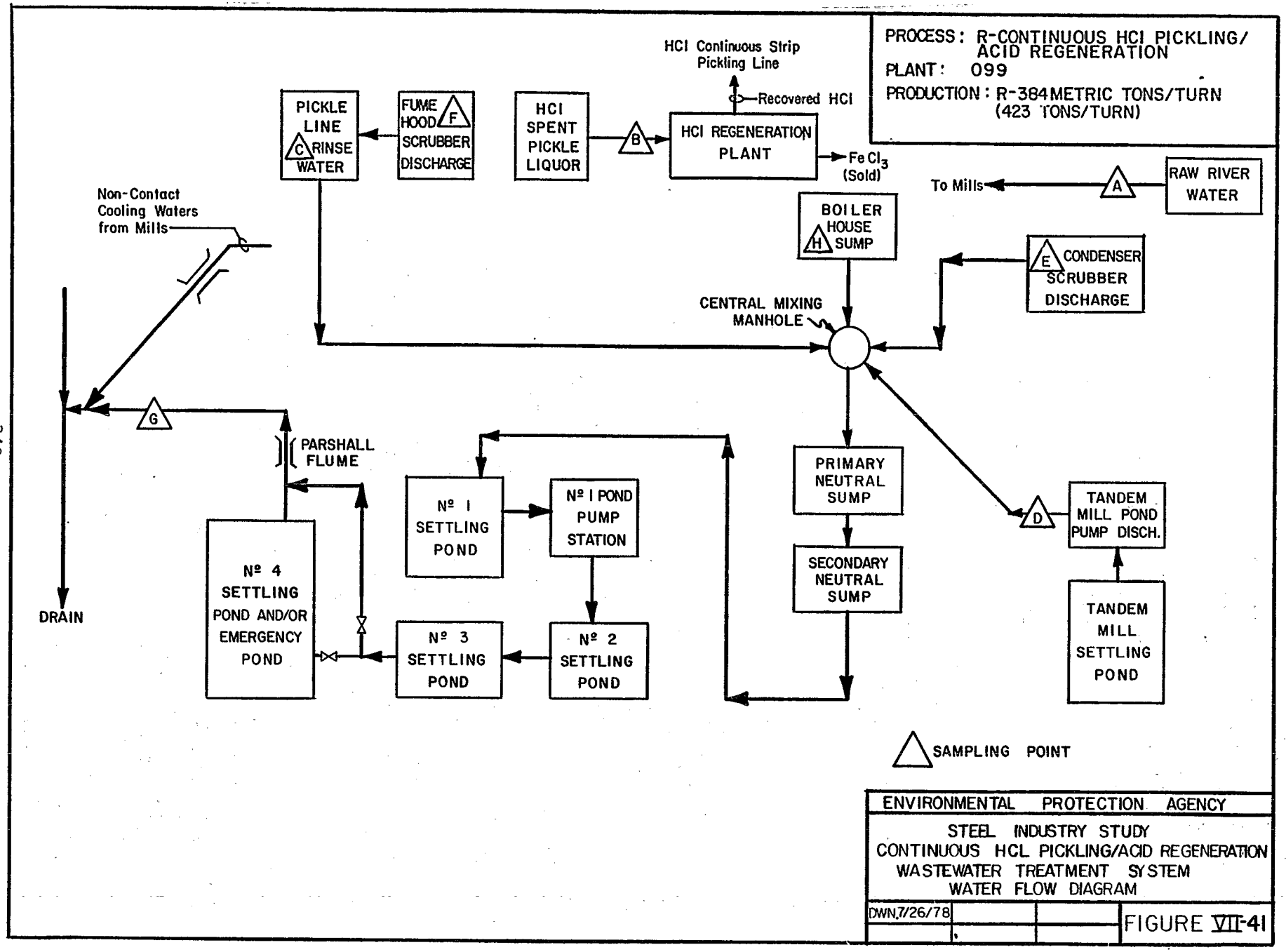
PROCESS: R-CONTINUOUS HCl PICKLING/ ACID REGENERATION
PLANT: 099
PRODUCTION: R-384 METRIC TONS/TURN (423 TONS/TURN)
HCl Continuous Strip Pickling Line
Recovered HCl
PICKLE LINE
C RINSE WATER
FUME HOOD F SCRUBBER DISCHARGE
HCl SPENT PICKLE LIQUOR
B
HCl REGENERATION PLANT
$FeCl_3$ (Sold)
To Mills
A
RAW RIVER WATER
Non-Contact Cooling Waters from Mills
BOILER HOUSE H SUMP
E CONDENSER SCRUBBER DISCHARGE
CENTRAL MIXING MANHOLE
G
PARSHALL FLUME
DRAIN
Nº 1 SETTLING POND
Nº 1 POND PUMP STATION
PRIMARY NEUTRAL SUMP
SECONDARY NEUTRAL SUMP
D
TANDEM MILL POND PUMP DISCH.
TANDEM MILL SETTLING POND
Nº 4 SETTLING POND AND/OR EMERGENCY POND
Nº 3 SETTLING POND
Nº 2 SETTLING POND
SAMPLING POINT
ENVIRONMENTAL PROTECTION AGENCY
STEEL INDUSTRY STUDY
CONTINUOUS HCL PICKLING/ACID REGENERATION
WASTEWATER TREATMENT SYSTEM
WATER FLOW DIAGRAM
DWN.7/26/78
FIGURE VII-41

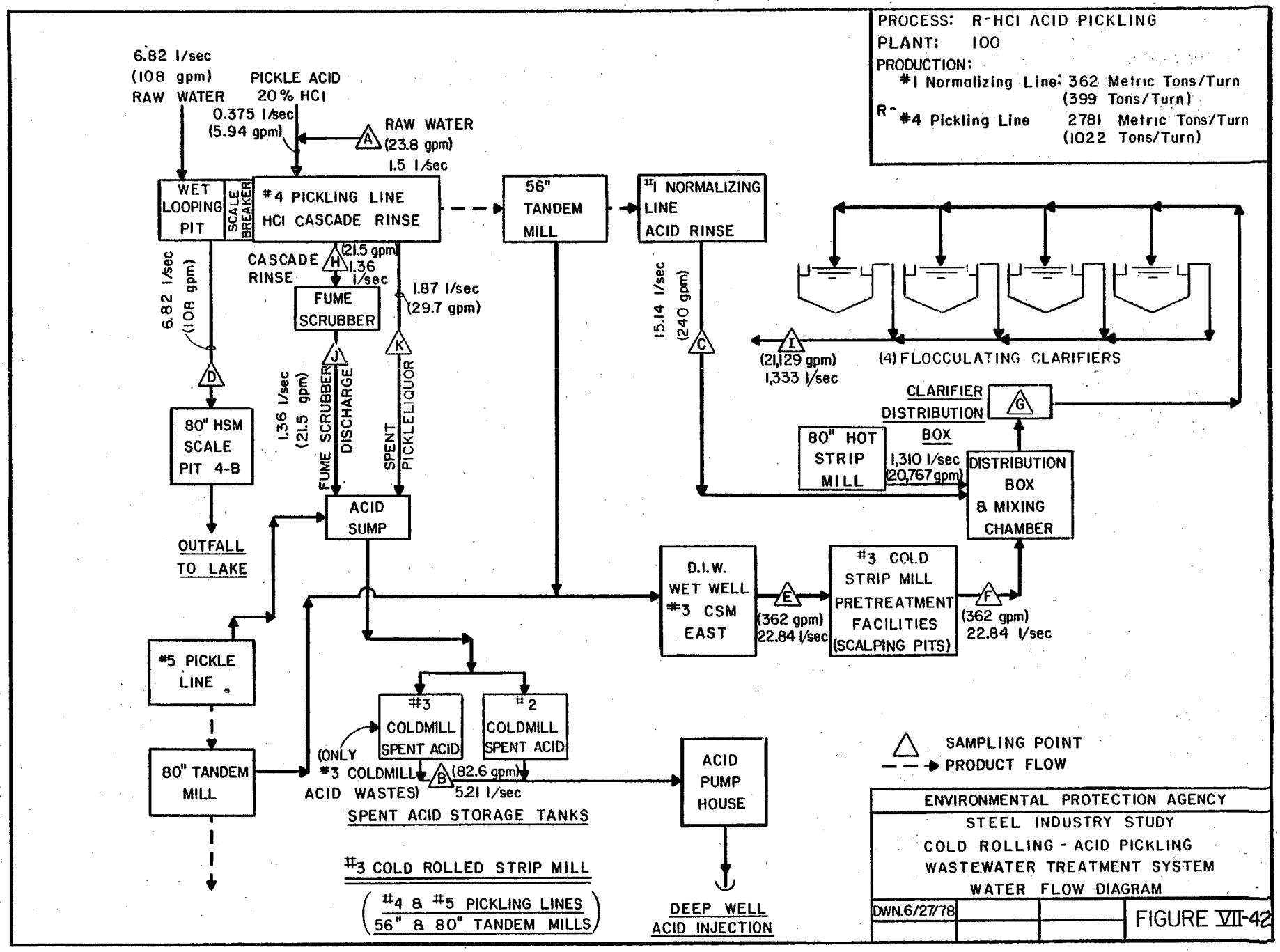
PROCESS: R-HCl ACID PICKLING
PLANT: 100
PRODUCTION:
#1 Normalizing Line: 362 Metric Tons/Turn (399 Tons/Turn)
R- #4 Pickling Line 2781 Metric Tons/Turn (1022 Tons/Turn)
6.82 l/sec (108 gpm) RAW WATER
PICKLE ACID 20% HCl
0.375 l/sec (5.94 gpm)
A
RAW WATER (23.8 gpm)
1.5 l/sec
WET LOOPING PIT
SCALE BREAKER
#4 PICKLING LINE HCl CASCADE RINSE
56" TANDEM MILL
#1 NORMALIZING LINE ACID RINSE
CASCADE RINSE
H
(21.5 gpm) 1.36 l/sec
FUME SCRUBBER
1.87 l/sec (29.7 gpm)
6.82 l/sec (108 gpm)
D
80" HSM SCALE PIT 4-B
OUTFALL TO LAKE
1.36 l/sec (21.5 gpm)
J
FUME SCRUBBER DISCHARGE
K
SPENT PICKLE LIQUOR
ACID SUMP
15.14 l/sec (240 gpm)
C
I
(21,129 gpm) 1,333 l/sec
(4) FLOCCULATING CLARIFIERS
CLARIFIER DISTRIBUTION BOX
G
80" HOT STRIP MILL
1,310 l/sec (20,767 gpm)
DISTRIBUTION BOX & MIXING CHAMBER
D.I.W. WET WELL #3 CSM EAST
E
(362 gpm) 22.84 l/sec
#3 COLD STRIP MILL PRETREATMENT FACILITIES (SCALPING PITS)
F
(362 gpm) 22.84 l/sec
#5 PICKLE LINE
80" TANDEM MILL
#3 COLDMILL SPENT ACID
#2 COLDMILL SPENT ACID
(ONLY #3 COLDMILL ACID WASTES)
B
(82.6 gpm) 5.21 l/sec
SPENT ACID STORAGE TANKS
ACID PUMP HOUSE
DEEP WELL ACID INJECTION
#3 COLD ROLLED STRIP MILL
(#4 & #5 PICKLING LINES 56" & 80" TANDEM MILLS)
SAMPLING POINT
PRODUCT FLOW
ENVIRONMENTAL PROTECTION AGENCY
STEEL INDUSTRY STUDY
COLD ROLLING - ACID PICKLING WASTEWATER TREATMENT SYSTEM WATER FLOW DIAGRAM
DWN.6/27/78
FIGURE VII-42

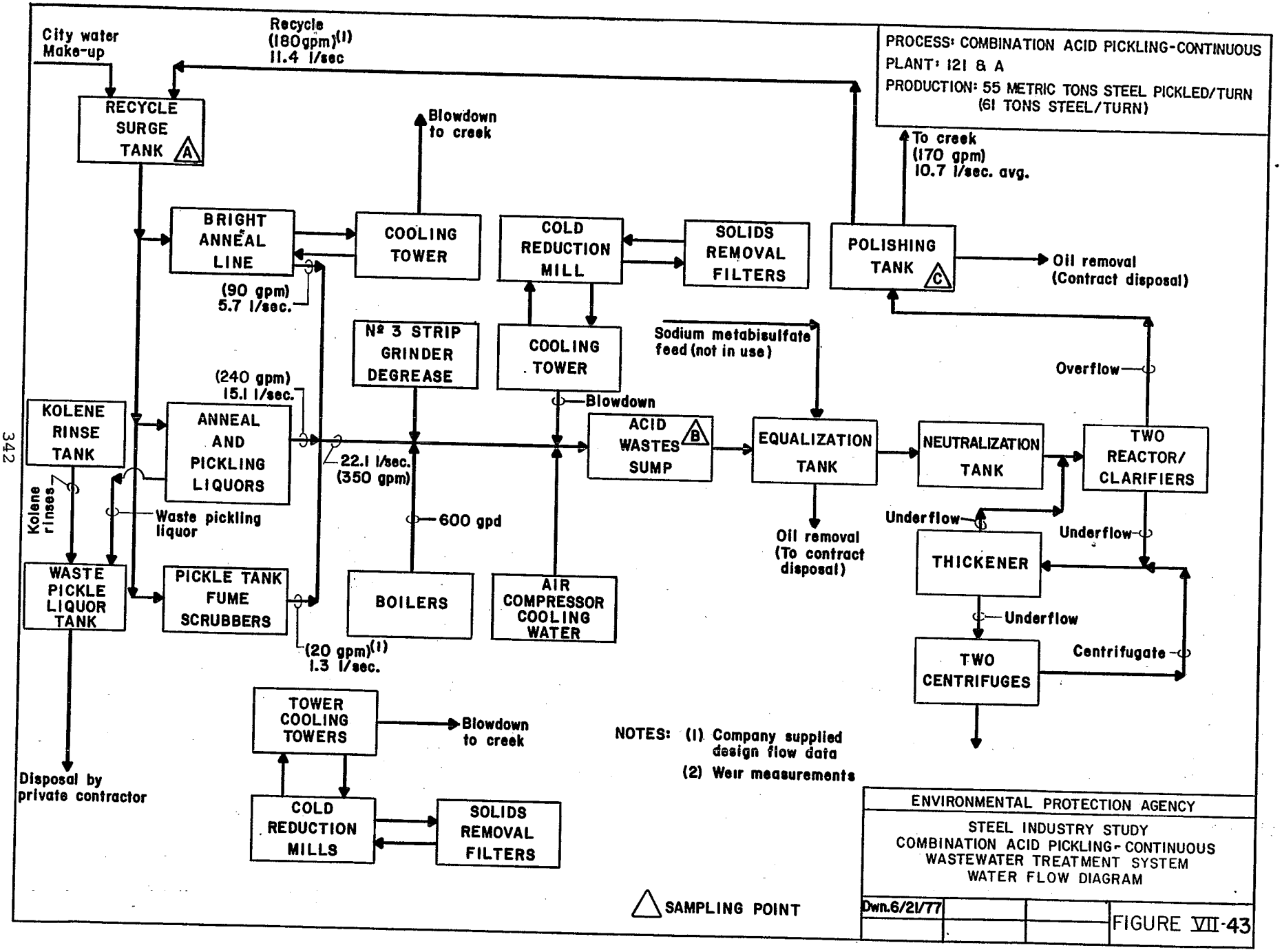

FIGURE VII-43

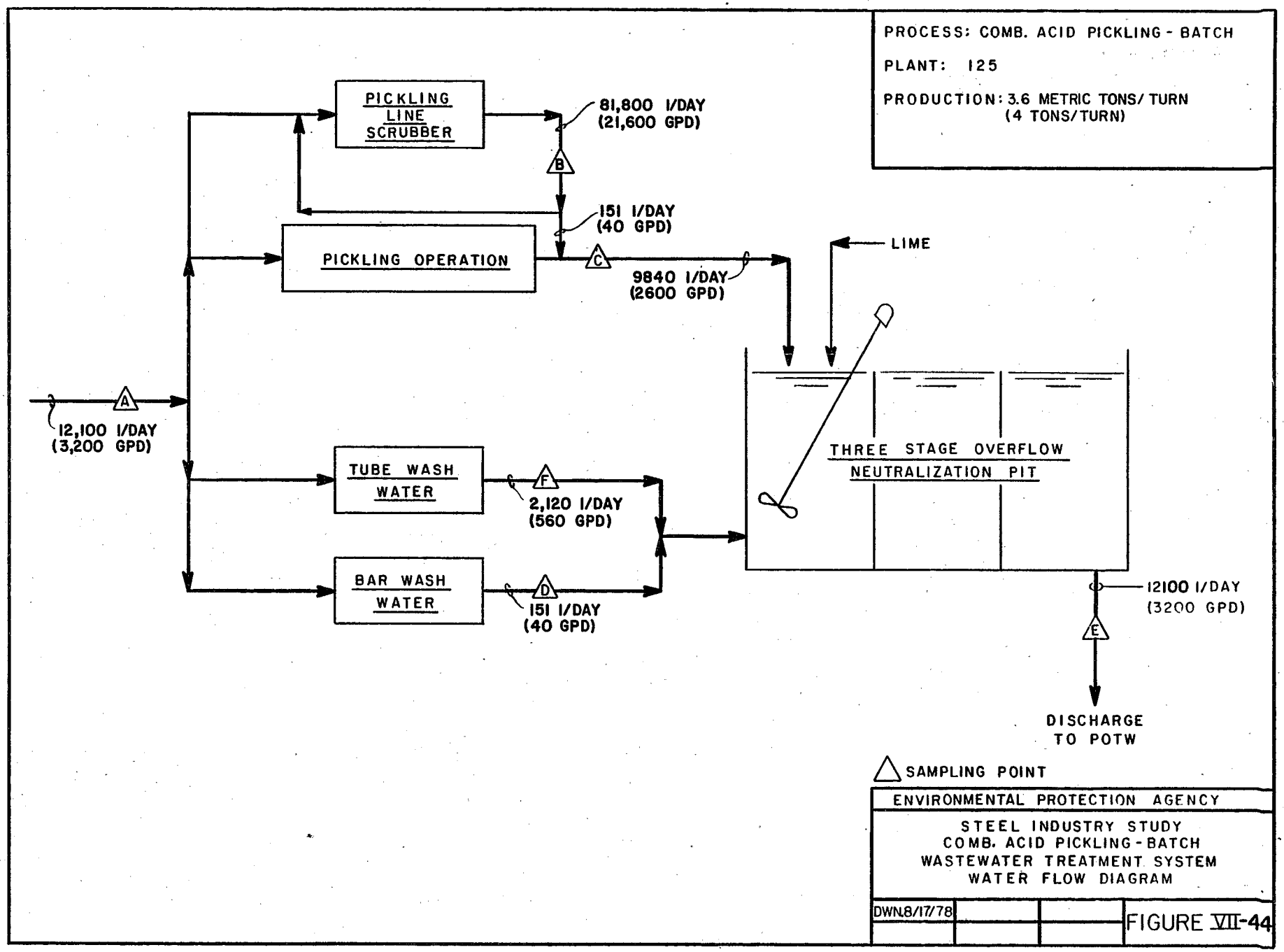
PROCESS: COMB. ACID PICKLING - BATCH
PLANT: 125
PRODUCTION: 3.6 METRIC TONS/ TURN
(4 TONS/TURN)
PICKLING LINE SCRUBBER
81,800 l/DAY
(21,600 GPD)
B
151 l/DAY
(40 GPD)
PICKLING OPERATION
C
9840 l/DAY
(2600 GPD)
LIME
A
12,100 l/DAY
(3,200 GPD)
TUBE WASH WATER
F
2,120 l/DAY
(560 GPD)
BAR WASH WATER
D
151 l/DAY
(40 GPD)
THREE STAGE OVERFLOW
NEUTRALIZATION PIT
12100 l/DAY
(3200 GPD)
E
DISCHARGE
TO POTW
SAMPLING POINT
ENVIRONMENTAL PROTECTION AGENCY
STEEL INDUSTRY STUDY
COMB. ACID PICKLING - BATCH
WASTEWATER TREATMENT SYSTEM
WATER FLOW DIAGRAM
DWN 8/17/78
FIGURE VII-44

ACID PICKLING SUBCATEGORY

SECTION VIII

COST, ENERGY, AND NON-WATER QUALITY IMPACTS

Introduction

This section addresses the cost, energy, and non-water quality impacts of applying the different levels of pollution control to acid pickling operations. Topics of discussion include actual treatment costs incurred by plants sampled, the alternative treatment systems considered for use in the pickling subcategory, and the cost, energy, and other non-water quality impacts associated with the application of the BPT, BAT, BCT, NSPS, and Pretreatment alternative treatment systems. The alternative treatment systems are illustrated in Figure VIII-1. In addition, the consumptive use of water is addressed.

Actual Costs Incurred for Plants Sampled for This Study

The water pollution control costs for the acid pickling operations sampled during this study are presented in Tables VIII-1 through VIII-7. The costs were derived from data supplied by the industry at the time of sampling or from data submitted in response to the D-DCPs. The costs have been adjusted to July 1978 dollars. Where central treatment systems are installed, the industry often supplied total cost data for the entire treatment system. These costs were analyzed and apportioned to estimate costs attributable to acid pickling wastes. In some instances, standard cost of capital and depreciation factors were applied to the reported capital costs to determine the annual costs of capital. In the remaining instances, the costs listed in the tables were provided by the industry.

Control and Treatment Technologies

The treatment components and systems incorporated in the BPT and BAT alternative treatment systems are presented in Tables VIII-8 through VIII-10. The following items are described for each treatment step.

1. A description of treatment and/or control methods
2. Implementation time
3. Land requirements

It should be noted that the use of these control and treatment technology components is not required by the regulation. Any treatment system which achieves the effluent limitations and standards is adequate.

Cost, Energy, and Now-water Quality Impacts

General Introduction

The Agency estimated cost and energy requirements on the basis of the alternative treatment systems discussed in detail in Sections IX through XIII of this report.

Estimated Costs for the Installation of Pollution Control Technologies

A. Costs Required to Achieve the BPT Limitations

In order to develop BPT compliance costs, it was necessary to develop BPT models sized to represent the average pickling plants in the United States. Separate model sizes were developed for each of the segments in each acid pickling subdivision. The model sizes (tons/day) were developed on the bases of the average production capacities of each type of acid pickling operation. The components incorporated in the various treatment models are representative of treatment practice within the industry. The BPT model treatment costs (capital and annual) are shown in Tables VIII-11 through VIII-27.

Individual costs to achieve compliance with the BPT limitations were calculated by applying the treatment component model costs, adjusted for size, to each acid pickling site. These individual costs were summed to establish the total subcategory-wide cost. This total cost was then adjusted to account for treatment facilities in-place as of July 1, 1981, to arrive at the required BPT costs. These cost estimates for each segment are shown in Table VIII-28. The required BPT cost for the acid pickling subcategory is estimated to be $6.18 million and the associated annual cost is $3.59 million.

B. Costs Required to Achieve the BAT Limitations

The Agency considered three BAT alternative treatment systems for all acid pickling segments. BAT Alternative 1 consists of flow reduction with a cascade rinse system. BAT Alternative 2 adds a filtration system to BAT Alternative 1. BAT Alternative 3 is based upon zero discharge and includes a cascade rinse system, evaporation using vapor compression distillation, and 100% recycle. Additional details and rationale for these alternatives are provided in Section X. The capital and annual costs for each model BAT alternative treatment system for each acid pickling segment appear in Tables VIII-29 through VIII-41. A summary of the BAT costs for each segment is presented in Table VIII-42. The subcategory-wide costs for each of the BAT alternatives, were developed in the same manner as the BPT subcategory-wide costs, and are as follows:

BAT Costs (Millions of 7/1/78 Dollars)

	Capital	Annual
BAT 1	65.79	8.10
BAT 2	102.30	9.75
BAT 3	376.05	57.25

C. Costs Required to Achieve BCT Limitations

The BCT cost analyses were not performed, since the BCT regulation was remanded to the Agency for consideration. The BCT limitations promulgated by the Agency are the same as the BPT limitations for the corresponding pollutants. No additional treatment beyond the BPT level is being required for conventional pollutants.

D. Costs Required to Achieve NSPS and PSNS

Three different NSPS/PSNS treatment alternatives were considered for each acid pickling segment. Detailed discussions of the alternatives are presented in Sections XII and XIII. New facilities constructed after the proposal of this regulation are required to meet NSPS or PSNS. Model costs have been developed for the NSPS/PSNS alternative treatment systems. These model costs are shown in Tables VIII-43 through VIII-54. No subcategory-wide costs are presented, since estimates of future capacity additions were not made as part of this study.

E. Costs Required to Achieve PSES

Pretreatment Standards apply to those existing (PSES) sources which discharge to POTW systems. Tables VIII-11 through VIII-27 present the costs of the model pretreatment alternative systems developed for each segment of the acid pickling subcategory. Four pretreatment alternatives were considered for PSES. A discussion of these alternatives is presented in Section XIII. A summary of the PSES costs for each segment is presented in Table VIII-55. The subcategory-wide costs for each of the PSES alternatives were developed in the same manner as the BPT subcategory-wide costs, and are as follows:

PSES Costs (Millions of 7/1/78 Dollars)

	Capital	Annual
PSES - 1	29.04	10.37
PSES - 2	6.01	0.75
PSES - 3	7.91	1.01
PSES - 4	72.77	10.38

Costs corresponding to PSES Alternatives 2 through 4 are in addition to PSES-1 costs.

Energy Impacts

Moderate amounts of energy are required for the various levels of treatment in the acid pickling subcategory. Energy usage at the BPT level amounts to 0.48% of the electrical energy used by the industry in 1978. BAT Alternatives 1 and 2 involve very little additional energy consumption. However, BAT Alternative 3, which is based on evaporation technology, is much more energy intensive.

A. Energy Impacts at BPT

The estimated energy requirements are based upon the assumption that all acid pickling operations will install treatment systems similar to the model BPT treatment system, except for those operations where acid regeneration or recovery systems are already installed. For those operations, the estimated energy usage is based upon continued operation of these systems. The estimated annual energy usage for all pickling operations is 271 million kilowatt hours of electricity. This estimate represents about 0.48% of the 57 billion kilowatt hours used by the steel industry in 1978. Refer to Table VIII-56 for a detailed analysis of the BPT energy requirments for each acid pickling segment.

B. Energy Impacts at BAT

The estimated incremental energy requirements for each of the three BAT alternatives, above the BPT system requirements, appear in Table VIII-57 for each segment of the acid pickling subcategory. The subcategory-wide energy requirements are as follows:

	BAT Energy Usage (kwh/yr)
BAT - 1	0
BAT - 2	3,064,000
BAT - 3	373,624,000

C. Energy Impacts at BCT

The BCT limitations for conventional pollutants are the same as the corresponding BPT limitations. Therefore, no additional energy, beyond BPT, is required.

D. Energy Impacts at NSPS and PSNS

The energy requirements for the NSPS/PSNS alternative treatment models appear in Table VIII-58. Only model-based estimates are presented for NSPS and PSNS, as estimates of future additions of capacity were not made as part of this study. Energy requirements corresponding to NSPS/PSNS Alternatives 2 and 3 are in addition to NSPS/PSNS-1 energy requirements.

E. Energy Impacts at PSES

The energy requirements for the PSES alternative treatment models and the energy usage for each acid pickling segment are presented in Table VIII-59. The subcategory-wide PSES energy requirements are as follows:

	PSES Energy Usage (kwh/yr)
PSES-1	47,652,000
PSES-2	0
PSES-3	668,000
PSES-4	91,168,000

Energy requirements corresponding to PSES Alternatives 2 through 4 are in addition to PSES-1 energy requirements.

Non-water Quality Impacts

In general, there are minimal non-water quality impacts associated with the alternative treatment systems. Air pollution, solid waste disposal, and water consumption impacts were considered.

A. Air Pollution

There are no direct air pollution impacts associated with any of the alternative treatment systems considered for the acid pickling subcategory.

B. Solid Waste Disposal

Considerable amounts of solid waste will be generated at the BPT level of treatment. This solid waste consists of wastewater treatment sludges produced as a result of lime precipitation. These sludges are principally composed of precipitated metal hydroxides, calcium sulfate and unreacted lime. The volume of these sludges could be reduced by over 95% by recycling the sludge back to the treatment process. (See discussion in Section VII). Very little additional sludge will be generated as a result of installation of the BAT components. The amounts of dry solids that can be expected for operations in the various pickling segments appear in Table VIII-60. The solid waste generated at the BPT level amounts to 5.15 million tons/year. The solid waste produced at the BAT level is less than 1% of the solid waste generated at BPT.

C. Water Consumption

The Agency does not expect that a significant amount of water will be consumed as a result of compliance with the limitations and standards The model treatment systems include recycle for fume scrubbers. Some water may be consumed in these systems. However, the amount is expected to be minimal. No cooling

devices are envisioned for these recycle systems, so losses by evaporation will not be a problem. No other recycling is used in any of the model treatment systems. Hence, no significant water consumption is expected for this subcategory.

Summary of Impacts

In summary, the Agency concludes that the effluent reduction benefits described below for the acid pickling subcategory outweigh the adverse energy and non-water quality environmental impacts noted above.

Pollutant	Direct Discharges Effluent Loads (Tons/Year) Raw Waste	BPT
Flow (MGD)	72.5	58.4
TSS	8,675	1,893.7
Oil & Grease	1,070	530.2
Fluoride	18,502	302.4
Toxic Metals	6,382	66.7
Toxic Organics	-	-
Dissolved Iron	277,706	75.8

Pollutant	Indirect Discharges Effluent Loads (Tons/Year) Raw Waste	PSES-1
Flow (MGD)	14.2	10.7
TSS	1,552.1	329.7
Oil & Grease	192.3	92.4
Fluoride	5,032.4	45.4
Toxic Metals	1,053.2	11.5
Toxic Organics	-	-
Dissolved Iron	45,468.0	13.1

The Agency also concludes that the effluent reduction benefits associated with compliance with new source standards (NSPS, PSNS) outweigh the adverse energy and non-water quality environmental impacts.

TABLE VIII-1

EFFLUENT TREATMENT COST
SULFURIC ACID PICKLING - SPENT CONCENTRATES

(All costs are expressed in July 1978 dollars)

Plant Code	H-2	I-2	O-2	P-2	Q-2	QQ-2	R	R-2
Reference No.	0432A	0856P	0590	0312	0894	0584E	0240A	0240B
Initial Investment	Hauling	1,203,800	413,800	322,490	512,960	1,534,500	280,000	469,360
Annual Cost	costs							
Capital	estimated	108,220	37,200	28,990	46,120	137,950	25,170	42,200
Operation & Maintenance	at	49,910	2,320	-	19,910	65,940	-	27,820
Energy & Power	$264,000	25,710	-	101,730	24,880	12,410	59,660	61,030
Other	per year	484,000	-39,230	-34,170	-102,110	28,860	-	35,120
TOTAL	264,000	667,840	290	96,550	-11,200	245,160	84,830	166,170
$/Ton	0.43	2.56	0.007	2.64	-0.36	0.17	0.32	0.50

Plant Code	T-2	TT-2	WW-2	090	091	096	098
Reference No.	0792B	0856D	0868A	0476A	0612	0112I	0684D
Initial Investment	679,000	3,017,400	3,650,000	448,550	394,800	817,600	Hauling
Annual Cost							costs
Capital	61,040	271,260	328,140	40,320	35,490	73,500	estimated
Operation & Maintenance	-	464,050	313,260	34,940	34,380	34,230	at
Energy & Power	30,350	888,840	4,000	6,860	22,800	2,900	$210,000
Other	-31,930	767,320	838,420	-11,830	3,600	3,730	per year
TOTAL	59,460	2,391,470	1,483,820	70,290	96,270	114,360	210,000
$/Ton	0.88	1.43	1.44	3.67	0.47	15.74	1.41

TABLE VIII-2

EFFLUENT TREATMENT COST
SULFURIC ACID PICKLING RINSEWATER

(All costs are expressed in July 1978 dollars)

Plant Code Reference No.	H-2 0432A	I-2 (1) 0856P	I-2 (2) 0856P	QQ-2 0584E	R 0240A	R-2 0240B
Initial Investment	297,630	83,920	209,800	2,087,240	144,240	64,000
Annual Costs						
Capital	26,760	7,540	18,860	187,640	12,970	5,750
Operation & Maintenance	14,940	820	2,060	163,160	-	3,790
Energy & Power	9,730	10	30	154,300	29,830	8,320
Other	1,530	780	1,990	-	-	4,790
TOTAL	52,600	9,150	22,940	505,100	42,800	22,650
$/Ton	0.085	0.13	0.12	0.35	0.16	0.069

Plant Code Reference No.	S-2 0256G	SS-2 0112A	WW-2 0868A	090 0476A	091 0612	096 0112I
Initial Investment	16,730	144,450	716,170	178,080	794,540	-
Annual Costs						
Capital	1,500	12,990	64,380	16,010	71,430	147,800
Operation & Maintenance	4,380	13,570	55,990	7,420	69,200	68,450
Energy & Power	3,100	10,790	7,670	5,380	45,890	5,800
Other	90,060	3,290	34,460	1,160	7,250	7,450
TOTAL	99,040	40,640	162,500	29,970	193,770	229,500
$/Ton	1.05	0.066	0.23	1.57	0.94	25.40

(1)Spray rinse
(2)Cascade rinse

TABLE VIII-3

EFFLUENT TREATMENT COST
SULFURIC ACID PICKLING-CONTINUOUS FUME SCRUBBERS

(All costs are expressed in July 1978 dollars)

Plant Code Reference No.	QQ-2 0584E	SS-2 0112A	WW-2 0868A
Initial Investment	25,350	14,310	71,620
Annual Cost			
Capital	2,280	1,290	6,440
Operation & Maintenance	1,980	1,350	5,600
Energy & Power	1,710	1,070	770
Other	-	330	3,450
TOTAL	5,970	4,040	16,260
$/Ton	0.0042	0.0066	0.024

TABLE VIII-4

EFFLUENT TREATMENT COST
SULFURIC ACID PICKLING-BATCH AND
CONTINUOUS ACID RECOVERY PLANT WASTEWATER

(All costs are expressed in July 1978 dollars)

Plant Code	090
Reference No.	0476A
Initial Investment	1,630
Annual Cost	
Capital	150
Operation & Maintenance	70
Energy & Power	50
Other	10
TOTAL	280
$/Ton	0.015

TABLE VIII-5

EFFLUENT TREATMENT COST
HYDROCHLORIC ACID PICKLING-SPENT CONCENTRATES

(All costs are expressed in July 1978 dollars)

Plant Code	BB-2	U-2	V-2	X-2	Z-2	091	093	095
Reference No.	0060	0480A	0936	0060B	0396D	0612	0396A	0584F
Initial Investment	1,717,170	-	-	2,928,400	1,645,750	56,100	1,645,750	10,632,690
Annual Cost								
Capital	154,370	-	-	263,260	147,950	5,040	147,950	955,880
Operation & Maintenance	101,850	-	-	-	-	4,470	-	1,357,200
Energy & Power	33,330	-	-	387,560	679,600	1,940	679,600	958,640
Other	-	5860	7848	-1,397,600	-	-	-	349,190
TOTAL	289,550	5860	7848	-746,790	827,550	14,450	827,550	3,620,910
$/Ton	0.13	0.675	0.112	-1.31	1.83	0.13	1.83	-

TABLE VIII-6

EFFLUENT TREATMENT COST
HYDROCHLORIC ACID PICKLING - RINSEWATER

(All costs are expressed in July 1978 dollars)

Plant Code Reference No.	AA-2[1] 0384A	BB-2 0060	I-2 0856P	U-2 0480A	V-2 0936	Z-2 0396D	091 0612	093 0396D	099 0528B
Initial Investment	394,950	5,647,340	14,950	-	-	86,620	399,530	86,620	815,270
Annual Cost									
Capital	35,510	507,700	1,340	-	-	7,790	35,920	7,790	73,290
Operation & Maintanence	120,970	366,100	150	-	2,180	-	13,790	35,770	-460
Energy & Power	4,540	304,610	-	-	-	35,770	12,530	-	162,540
Other	-	-	140	27,311	1,591	-	17,180	3,640	35,060
TOTAL	161,020	1,178,410	1,630	27,311	3,771	43,560	79,420	47,200	270,430
$/Ton	0.19	0.52	0.38	3.143	0.054	0.096	0.90	0.10	0.49

(1)Applies to plant 100 in toxic pollutant study.

TABLE VIII-7

EFFLUENT TREATMENT COST
COMBINATION ACID PICKLING OPERATIONS

(All costs are expressed in July 1978 dollars)

Plant Code Reference No.	C 0424	D 0248 A & B	F 0856H	I 0432K	L 0440A	O 0176	U 0060D	121 0900	124 0088D	125 0884E	** 0112H(1)
Initial Investment	140,460	-	508,760	546,050	None	674,740	169,390	1,100,680	40,570	18,310	283,610
Annual Cost											
Capital	12,630	-	45,740	49,090	-	60,660	15,230	98,950	3,650	1,650	25,500
Operation & Maintenance(2)	4,080	-	30	17,700	21,010	39,740	11,610	49,990	20,830	11,280	24,710
Energy and Power(2)	-	-	-	-	-	-	-	-	-	-	-
Other	1,010	-	9,340	90,690	5,090	49,690	-	29,210	-	-	-
TOTAL	17,720	-	55,110	157,480	26,100	150,090	26,840	178,150	24,480	12,930	50,210
$/Ton	0.51	0.35	3.15	0.46	0.83	2.94	14.91	1.91	-	2.69	0.94

(1): Cost data was received in the response to the detailed questionnaire.
(2): Energy and power costs are included in operation and maintenance.
** : No plant code assigned.

TABLE VIII-8

CONTROL AND TREATMENT TECHNOLOGIES

ACID PICKLING SUBCATEGORY
ACID NEUTRALIZATION

C&TT Step	Description	Implementation Time (months)	Land Usage (ft^2)
A.	Acid Storage Tank - This step provides a tank in which the spent acid collects until it is hauled away or metered into the treatment system.	6	400
B.	Fume Scrubber Recycle - This system recycles 90 percent of the scrubber water to the fume scrubbers. The remaining 10 percent is fed to the wastewater treatment system.	2	625
C.	Equalization - This step allows the various waste sources (i.e., spent concentrate, rinse, and fume scrubber, if applicable) to combine and equalize prior to neutralization.	3	2500
D.	Surface Skimming - This step removes any floating oils from the wastewater.	-	-
E.	Neutralization with Lime - The addition of lime will raise the acidic wastewater to the neutral pH range of 6.0 to 9.0 and precipitate the dissolved metals in the wastewater.	3	625
F.	Flocculation with Polymer - The polymer will increase the removal of suspended and particulate solids through flocculation.	6	-
G.	Aeration - This step oxidizes iron from the ferrous to ferric state and enhances the action of the flocculating agents which have been added in the previous step. In addition, many of the metals in the dissolved state which have become oxidized are precipitated out of solution.	9-12	625
H.	Clarifier - This step provides the removal of flocculated materials as a result of sedimentation.	6	1000
I.	Vacuum Filter - This step dewaters the clarifier sludge, thereby reducing the volume and mass of sludges prior to disposal. The filtrate is returned to the treatment system inlet.	6	225

TABLE VIII-8
CONTROL AND TREATMENT TECHNOLOGIES
ACID PICKLING SUBCATEGORY
ACID NEUTRALIZATION
PAGE 2

C&TT Step	Description	Implementation Time (months)	Land Usage (ft^2)
J.	Rinse Reduction - This step reduces the rinse flow 90 percent through a cascaded system. The remaining 10 percent can be discharged or treated further.	6-12	775
K.	Pressure Filter - Additional suspended solids are removed by filtration.	15-18	625
L.	Vapor Compression Distillation - This step produces water of distillate quality for recycle.	6	2500
M.	Recycle - The water distilled in Step L is completely recycled to the process.	2	625

TABLE VIII-9

CONTROL AND TREATMENT TECHNOLOGIES

ACID PICKLING SUBCATEGORY
SULFURIC ACID RECOVERY

C&TT Step	Description	Implementation Time (months)	Land Usage (ft^2)
A.	Rinse Reduction - This step reduces the rinse flow through a cascaded system. The remaining reduced rinse flow is fed to the acid recovery system.	6-12	-
B.	Acid Recovery - This step combines the spent sulfuric acid and the reduced rinse flow. This highly acidic waste solution is cooled. Ferrous sulfate heptahydrate crystals form leaving sulfuric acid. The crystals can be sold as a by-product, while the sulfuric acid can be reused. Therefore, zero discharge of process wastewaters can be achieved.	12-24	5000

TABLE VIII-10

CONTROL AND TREATMENT TECHNOLOGIES

ACID PICKLING SUBCATEGORY
HYDROCHLORIC ACID REGENERATION

C&TT Step	Description	Implementation Time (months)	Land Usage (ft^2)
A.	Acid Storage Tank - This step provides a tank in which the spent acid collects until it is hauled away or metered into the treatment system.	6	400
B.	Acid Regeneration - In this step, the spent hydrochloric pickle liquor is evaporated in a roasting process. The vapors then pass through an absorber, where the acid vapors are condensed and washed with fresh water to form regenerated hydrochloric acid. Any gases remaining in the absorber are scrubbed with water and discharged.	6-12	15,000
C.	Fume Scrubber Recycle - This system recycles 90 percent of the scrubber water to the fume scrubbers. The remaining 10 percent is fed to the wastewater treatment system.	2	625
D.	Equalization - This step allows the various waste sources (i.e., spent concentrate, rinse, and fume scrubber, if applicable) to combine and equalize prior to neutralization.	3	2500
E.	Surface Skimming - This step removes any floating oils from the wastewater.	-	-
F.	Neutralizaton with Lime - The addition of lime will raise the acidic wastewater to the neutral pH range of 6.0 to 9.0 and precipitate the dissolved metals in the wastewater.	3	625
G.	Flocculation with Polymer - The polymer will increase the removal of suspended and particulate solids through flocculation.	6	-
H.	Aeration - This step oxidizes iron from the ferrous to ferric state and enhances the action of the flocculating agents which have been added in the previous step. In addition, many of the metals in the dissolved state are oxidized and precipitated out of solution.	9-12	625

TABLE VIII-10
CONTROL AND TREATMENT TECHNOLOGIES
ACID PICKLING SUBCATEGORY
HYDROCHLORIC ACID REGENERATION
PAGE 2

C&TT Step	Description	Implementation Time (months)	Land Usage (ft^2)
I.	Clarifier - This step provides the removal of flocculated materials as a result of sedimentation.	6	3640
J.	Vacuum Filter - This step dewaters the clarifier sludge, thereby reducing the volume and mass of sludges prior to disposal. The filtrate is returned to the treatment system inlet.	6	225
K.	Absorber Vent Scrubber Recycle - This system recycles 75 percent of the scrubber water to the absorber vent scrubbers. The remaining 25 percent is fed to the wastewater treatment system.	2	800
L.	Rinse Reduction - This step reduces the rinse flow 90 percent through a cascaded system. The remaining 10 percent can be discharged or treated further.	6-12	775
M.	Pressure Filter - Additional suspended solids are removed by filtration.	15-18	625
N.	Vapor Compression Distillation - This step produces water of distillate quality for recycle.	6	3025
O.	Recycle - The water distilled in Step N is completely recycled to the process.	2	625

TABLE VIII-11

BPT/PSES-1 TREATMENT MODEL COSTS: BASIS 7/1/78 DOLLARS

Subcategory : Acid Pickling
Subdivision : Sulfuric
: Strip/Sheet/Plate
: Neutralization

Model Size (TPD): 1,660
Oper. Days/Year : 320
Turns/Day : 3

C&TT Step	A	B	C	D	E	F	G	H	I	Total
Investment ($ x 10^{-3})	242.8	59.1	121.1	8.4	176.9	22.0	99.6	213.8	601.0	1,544.7
Annual Costs ($ x 10^{-3})										
Capital	21.8	5.3	10.9	0.8	15.9	2.0	9.0	19.2	54.0	138.9
Operation & Maintenance	8.5	2.1	4.2	0.3	6.2	0.8	3.5	7.5	21.0	54.1
Land	0.1	0.1	0.1		0.1			0.1	0.4	0.9
Sludge Disposal									373.9	373.9
Hazardous Waste Disposal										
Oil Disposal				0.1						0.1
Energy & Power		1.0	2.6	0.1	1.3	0.4	0.9	0.9	14.3	21.5
Steam										
Waste Acid										
Crystal Disposal										
Chemical					466.6	3.5				470.1
TOTAL	30.4	8.5	17.8	1.3	490.1	6.7	13.4	27.7	463.6	1,059.5
Credits										
Scale										
Sinter										
Oil										
Acid Recovery										
TOTAL CREDITS										
NET TOTAL	30.4	8.5	17.8	1.3	490.1	6.7	13.4	27.7	463.6	1,059.5

KEY TO C&TT STEPS

A: Acid Storage
B: Fume Scrubber Recycle
C: Equalization
D: Surface Skimming
E: Neutralization with Lime
F: Flocculation with Polymer
G: Aeration
H: Clarification
I: Vacuum Filtration

TABLE VIII-12

BPT/PSES-1 TREATMENT MODEL COSTS: BASIS 7/1/78 DOLLARS

Subcategory : Acid Pickling
Subdivision : Sulfuric
: Rod/Wire/Coil
: Neutralization

Model Size (TPD): 370
Oper. Days/Year : 260
Turns/Day : 3

C&TT Step	A	B	C	D	E	F	G	H	I	Total
Investment ($ x 10^{-3})	97.2	59.1	65.7	8.4	143.7	20.0	81.0	130.4	420.6	1,026.1
Annual Costs ($ x 10^{-3})										
Capital	8.7	5.3	5.9	0.8	12.9	1.8	7.3	11.7	37.8	92.2
Operation & Maintenance	3.4	2.1	2.3	0.3	5.0	0.7	2.8	4.6	14.7	35.9
Land	0.1	0.1	0.1		0.1			0.1	0.1	0.6
Sludge Disposal									81.3	81.3
Hazardous Waste Disposal										
Oil Disposal										
Energy & Power		0.7	1.2	1.2	0.7	0.1	0.6	0.3	6.4	11.2
Steam										
Waste Acid										
Crystal Disposal										
Chemical					103.1	0.9				104.0
TOTAL	12.2	8.2	9.5	2.3	121.8	3.5	10.7	16.7	140.3	325.2
Credits										
Scale										
Sinter										
Oil										
Acid Recovery										
TOTAL CREDITS										
NET TOTAL	12.2	8.2	9.5	2.3	121.8	3.5	10.7	16.7	140.3	325.2

KEY TO C&TT STEPS

A: Acid Storage
B: Fume Scrubber Recycle
C: Equalization
D: Surface Skimming
E: Neutralization with Lime
F: Flocculation with Polymer
G: Aeration
H: Clarification
I: Vacuum Filtration

TABLE VIII-13

BPT/PSES-1 TREATMENT MODEL COSTS: BASIS 7/1/78 DOLLARS

Subcategory : Acid Pickling
Subdivision : Sulfuric
: Bar/Billet/Bloom
: Neutralization

Model Size (TPD): 720
Oper. Days/Year : 260
Turns/Day : 3

C&TT Step	A	B	C	D	E	F	G	H	I	Total
Investment ($ x 10^{-3})	147.3	59.1	58.2	8.2	122.3	20.0	78.6	114.0	513.9	1,121.6
Annual Costs ($ x 10^{-3})										
Capital	13.2	5.3	5.2	0.7	11.0	1.8	7.1	10.2	46.2	100.7
Operation & Maintenance	5.2	2.1	2.0	0.3	4.3	0.7	2.8	4.0	18.0	39.4
Land	0.1	0.1	0.1		0.1			0.1	0.2	0.7
Sludge Disposal									113.6	113.6
Hazardous Waste Disposal										
Oil Disposal										
Energy & Power		0.7	0.7	0.1	0.7	0.1	0.6	0.3	7.6	10.8
Steam										
Waste Acid										
Crystal Disposal										
Chemical					140.5	0.9				141.4
TOTAL	18.5	8.2	8.0	1.1	156.6	3.5	10.5	14.6	185.6	406.6
Credits										
Scale										
Sinter										
Oil										
Acid Recovery										
TOTAL CREDITS										
NET TOTAL	18.5	8.2	8.0	1.1	156.6	3.5	10.5	14.6	185.6	406.6

KEY TO C&TT STEPS

A: Acid Storage
B: Fume Scrubber Recycle
C: Equalization
D: Surface Skimming
E: Neutralization with Lime
F: Flocculation with Polymer
G: Aeration
H: Clarification
I: Vacuum Filtration

TABLE VIII-14

BPT/PSES-1 TREATMENT MODEL COSTS: BASIS 7/1/78 DOLLARS

Subcategory : Acid Pickling
Subdivision : Sulfuric
: Pipe/Tube/Other
: Neutralization

Model Size (TPD): 220
Oper. Days/Year : 260
Turns/Day : 3

C&TT Step	A	B	C	D	E	F	G	H	I	Total
Investment ($ x 10^{-3})	71.5	59.1	69.6	8.4	152.3	20.0	81.0	134.9	374.1	970.9
Annual Costs ($ x 10^{-3})										
Capital	6.4	5.3	6.3	0.8	13.7	1.8	7.3	12.1	33.6	87.3
Operation & Maintenance	2.5	2.1	2.4	0.3	5.3	0.7	2.8	4.7	13.1	33.9
Land	0.1	0.1	0.1		0.1			0.1	0.1	0.6
Sludge Disposal									66.8	66.8
Hazardous Waste Disposal										
Oil Disposal				0.1						0.1
Energy & Power		0.8	1.3	0.1	0.7	0.1	0.6	0.3	6.2	10.1
Steam										
Waste Acid										
Crystal Disposal										
Chemical					86.4	0.9				87.3
TOTAL	9.0	8.3	10.1	1.3	106.2	3.5	10.7	17.2	119.8	286.1
Credits										
Scale										
Sinter										
Oil										
Acid Recovery										
TOTAL CREDITS										
NET TOTAL	9.0	8.3	10.1	1.3	106.2	3.5	10.7	17.2	119.8	286.1

KEY TO C&TT STEPS

A: Acid Storage
B: Fume Scrubber Recycle
C: Equalization
D: Surface Skimming
E: Neutralization with Lime
F: Flocculation with Polymer
G: Aeration
H: Clarification
I: Vacuum Filtration

TABLE VIII-15

BPT/PSES-1 TREATMENT MODEL COSTS: BASIS 7/1/78 DOLLARS

Subcategory	: Acid Pickling	Model Size-TPD :	1,660
Subdivision	: Sulfuric	Oper. Days/Year:	320
	: Strip/Sheet/Plate	Turns/Day :	3
	: Acid Recovery		

C&TT Step	A	B	Total
Investment ($ x 10^{-3})	597.6	2,450.7	3,048.3
Annual Costs ($ x 10^{-3})			
Capital	53.7	220.3	274.0
Operation & Maintenance	20.9	85.8	106.7
Land		0.3	0.3
Sludge Disposal			
Hazardous Waste Disposal			
Oil Disposal			
Energy & Power		53.7	53.7
Steam			
Waste Acid			
Crystal Disposal		134.4	134.4
Chemical			
TOTAL	74.6	495.5	569.1
Credits			
Scale			
Sinter			
Oil			
Acid Recovery		1.8	1.8
TOTAL CREDITS		1.8	1.8
NET TOTAL	74.6	492.7	567.3

KEY TO C&TT STEPS

A: Rinse Reduction
B: Acid Recovery

TABLE VIII-16

BPT/PSES-1 TREATMENT MODEL COSTS: BASIS 7/1/78 DOLLARS

Subcategory	: Acid Pickling	Model Size-TPD :	370
Subdivision	: Sulfuric	Oper. Days/Year:	260
	: Rod/Wire/Coil	Turns/Day :	3
	: Acid Recovery		

C&TT Step	A	B	Total
Investment ($ x 10^{-3})	133.2	959.1	1,092.3
Annual Costs ($ x 10^{-3})			
Capital	12.0	86.2	98.2
Operation & Maintenance	4.7	33.6	38.3
Land		0.3	0.3
Sludge Disposal			
Hazardous Waste Disposal			
Oil Disposal			
Energy & Power		9.9	9.9
Steam			
Waste Acid			
Crystal Disposal		23.4	23.4
Chemical			
TOTAL	16.7	153.4	170.1
Credits			
Scale			
Sinter			
Oil			
Acid Recovery		0.3	0.3
TOTAL CREDITS		0.3	0.3
NET TOTAL	16.7	153.1	169.8

KEY TO C&TT STEPS

A: Rinse Reduction
B: Acid Recovery

TABLE VIII-17

BPT/PSES-1 TREATMENT MODEL COSTS: BASIS 7/1/78 DOLLARS

Subcategory	: Acid Pickling	Model Size-TPD :	720
Subdivision	: Sulfuric	Oper. Days/Year:	260
	: Bar/Billet/Bloom	Turns/Day :	3
	: Acid Recovery		

C&TT Step	A	B	Total
Investment ($ x 10^{-3})	259.2	1,484.7	1,743.9
Annual Costs ($ x 10^{-3})			
Capital	23.3	133.5	156.8
Operation & Maintenance	9.1	52.0	61.1
Land		0.3	0.3
Sludge Disposal			
Hazardous Waste Disposal			
Oil Disposal			
Energy & Power		18.6	18.6
Steam			
Waste Acid			
Crystal Disposal		46.8	46.8
Chemical			
TOTAL	32.4	251.2	283.6
Credits			
Scale			
Sinter			
Oil			
Acid Recovery		0.7	0.7
TOTAL CREDITS		0.7	0.7
NET TOTAL	32.4	250.5	282.9

KEY TO C&TT STEPS

A: Rinse Reduction
B: Acid Recovery

TABLE VIII-18

BPT/PSES-1 TREATMENT MODEL COSTS: BASIS 7/1/78 DOLLARS

Subcategory	: Acid Pickling	Model Size-TPD :	220
Subdivision	: Sulfuric	Oper. Days/Year:	260
	: Pipe/Tube/Other	Turns/Day :	3
	: Acid Recovery		

C&TT Step	A	B	Total
Investment ($ x 10^{-3})	79.2	793.9	873.1
Annual Costs ($ x 10^{-3})			
Capital	7.1	71.4	78.5
Operation & Maintenance	2.8	27.8	30.6
Land		0.3	0.3
Sludge Disposal			
Hazardous Waste Disposal			
Oil Disposal			
Energy & Power		5.8	5.8
Steam			
Waste Acid			
Crystal Disposal		15.6	15.6
Chemical			
TOTAL	9.9	120.9	130.8
Credits			
Scale			
Sinter			
Oil			
Acid Recovery		0.2	0.2
TOTAL CREDITS		0.2	0.2
NET TOTAL	9.9	120.7	130.6

KEY TO C&TT STEPS

A: Rinse Reduction
B: Acid Recovery

TABLE VIII-19

BPT/PSES-1 TREATMENT MODEL COSTS: BASIS 7/1/78 DOLLARS

Subcategory : Acid Pickling
Subdivision : Hydrochloric
: Strip/Sheet/Plate
: Neutralization

Model Size (TPD): 4,020
Oper. Days/Year : 320
Turns/Day : 3

C&TT Step	A	B	C	D	E	F	G	H	I	Total
Investment ($ x 10^{-3})	263.0	59.9	256.6	11.5	453.3	25.8	193.1	366.9	601.0	2,231.1
Annual Costs ($ x 10^{-3})										
Capital	23.6	5.4	23.1	1.0	40.8	2.3	17.4	33.0	54.0	200.6
Operation & Maintenance	9.2	2.1	9.0	0.4	15.9	0.9	6.8	12.8	21.0	78.1
Land	0.1	0.1	0.1		0.1			0.1	0.2	0.7
Sludge Disposal									426.4	426.4
Hazardous Waste Disposal										
Oil Disposal				0.1						0.1
Energy & Power		1.4	6.4	0.3	5.0	0.7	3.3	1.4	157.5	176.0
Steam										
Waste Acid										
Crystal Disposal										
Chemical					840.5	11.5				852.0
TOTAL	32.9	9.0	38.6	1.8	902.3	15.4	27.5	47.3	659.1	1,733.9
Credits										
Scale										
Sinter										
Oil										
Acid Recovery										
TOTAL CREDITS										
NET TOTAL	32.9	9.0	38.6	1.8	902.3	15.4	27.5	47.3	659.1	1,733.9

KEY TO C&TT STEPS

A: Acid Storage
B: Fume Scrubber Recycle
C: Equalization
D: Surface Skimming
E: Neutralization with Lime
F: Flocculation with Polymer
G: Aeration
H: Clarification
I: Vacuum Filtration

TABLE VIII-20

BPT/PSES-1 TREATMENT MODEL COST: BASIS 7/1/78 DOLLARS

Subcategory : Acid Pickling
Subdivision : Hydrochloric
: Rod/Wire/Coil

Model-Size-TPD : 90
Oper. Days/Year: 260
Turns/Day : 3

C&TT Step	A	B	C	D	E	F	G	H	I	Total
Investment ($ x 10^{-3})	37.0	61.9	56.6	8.0	119.0	20.0	76.5	114.0	294.2	787.2
Annual Costs ($ x 10^{-3})										
Capital	3.3	5.6	5.1	0.7	10.7	1.8	6.9	10.2	26.5	70.8
Operation & Maintenance	1.3	2.2	2.0	0.3	4.2	0.7	2.7	4.0	10.3	27.7
Land	0.1	0.1	0.1		0.1			0.1	0.1	0.6
Sludge Disposal									18.2	18.2
Hazardous Waste Disposal										
Oil Disposal										
Energy & Power		1.2	0.6	0.1	0.7	0.1	0.6	0.3	4.7	8.3
Steam										
Waste Acid										
Crystal Disposal										
Chemical					63.0	0.9				63.9
TOTAL	4.7	9.1	7.8	1.1	78.7	3.5	10.2	14.6	59.8	189.5
Credits										
Scale										
Sinter										
Oil										
Acid Recovery										
TOTAL CREDITS										
NET TOTAL	4.7	9.1	7.8	1.1	78.7	3.5	10.2	14.6	59.8	189.5

KEY TO C&TT STEPS

A: Acid Storage
B: Fume Scrubber Recycle
C: Equalization
D: Surface Skimming
E: Neutralization with Lime
F: Flocculation with Polymer
G: Aeration
H: Clarification
I: Vacuum Filtration

TABLE VIII-21

BPT/PSES-1 TREATMENT MODEL COST: BASIS 7/1/78 DOLLARS

Subcategory : Acid Pickling
Subdivision : Hydrochloric
: Pipe/Tube

Model Size-TPD : 110
Oper. Days/Year: 260
Turns/Day : 3

C&TT Step	A	B	C	D	E	F	G	H	I	Total
Investment ($ x 10^{-3})	37.0	59.1	67.4	8.4	147.6	20.0	81.0	133.9	270.3	824.7
Annual Costs ($ x 10^{-3})										
Capital	3.3	5.3	6.1	0.8	13.3	1.8	7.3	12.0	24.3	74.2
Operation & Maintenance	1.3	2.1	2.4	0.3	5.2	0.7	2.8	4.7	9.5	29.0
Land	0.1	0.1	0.1		0.1			0.1	0.1	0.6
Sludge Disposal									15.7	15.7
Hazardous Waste Disposal										
Oil Disposal										
Energy & Power		0.7	1.2	0.1	0.7	0.1	0.6	0.3	4.2	7.9
Steam										
Waste Acid										
Crystal Disposal										
Chemical					46.2	0.9				47.1
TOTAL	4.7	8.2	9.8	1.2	65.5	3.5	10.7	17.1	53.8	174.5
Credits										
Scale										
Sinter										
Oil										
Acid Recovery										
TOTAL CREDITS										
NET TOTAL	4.7	8.2	9.8	1.2	65.5	3.5	10.7	17.1	53.8	174.5

KEY TO C&TT STEPS

A: Acid Storage
B: Fume Scrubber Recycle
C: Equalization
D: Surface Skimming
E: Neutralization with Lime
F: Flocculation with Polymer
G: Aeration
H: Clarification
I: Vacuum Filtration

TABLE VIII-22

BPT TREATMENT MODEL COST: BASIS 7/1/78 DOLLARS

Subcategory : Acid Pickling
Subdivision : Hydrochloric
: Strip/Sheet/Plate
: Acid Regeneration

Model Size-TPD : 4,020
Oper. Days/Year: 320
Turns/Day : 3

C&TT Step	A	B	C	D	E	F	G	H	I	J	Total
Investment ($ x 10^{-3})	263.0	2,419.4	59.9	321.8	21.0	590.6	31.0	251.6	497.6	601.0	5,056.9
Annual Costs ($ x 10^{-3})											
Capital	23.6	217.5	5.4	28.9	1.9	53.1	2.8	22.6	44.7	54.0	454.5
Operation & Maintenance	9.2	84.7	2.1	11.3	0.7	20.7	1.1	8.8	17.4	21.0	177.0
Land	0.1	0.9	0.1	0.1		0.1			0.2	0.2	1.7
Sludge Disposal										207.2	207.2
Hazardous Waste Disposal											
Oil Disposal											
Energy & Power		257.7	1.4	8.6	0.3	7.9	1.0	4.3	1.7	10.0	292.9
Steam											
Waste Acid											
Crystal Disposal											
Chemical						407.2	17.3				424.5
TOTAL	32.9	560.8	9.0	48.9	2.9	489.0	22.2	35.7	64.0	292.4	1,557.8
Credits											
Scale											
Sinter											
Oil											
Acid Recovery		2,322.4									2,322.4
TOTAL CREDITS		2,322.4									2,322.4
NET TOTAL	32.9	-1,761.6	9.0	48.9	2.9	489.0	22.2	35.7	64.0	292.4	-764.6

KEY TO C&TT STEPS

A: Acid Storage
B: Acid Regeneration
C: Fume Scrubber Recycle
D: Equalization
E: Surface Skimming
F: Neutralization With Lime
G: Flocculation With Polymer
H: Aeration
I: Clarification
J: Vacuum Filtration

TABLE VIII-23

BPT/PSES-1 TREATMENT MODEL COST: BASIS 7/1/78 DOLLARS

Subcategory : Acid Pickling
Subdivision : Combination
: Batch Strip/Sheet/Plate

Model Size-TPD : 150
Oper. Days/Year: 260
Turns/Day : 3

C&TT Step	A	B	C	D	E	F	G	H	I	Total
Investment ($ x 10^{-3})	56.1	59.1	55.6	7.8	116.8	20.0	75.1	112.0	304.0	806.5
Annual Costs ($ x 10^{-3})										
Capital	5.0	5.3	5.0	0.7	10.5	1.8	6.8	10.1	27.3	72.5
Operation & Maintenance	2.0	2.1	1.9	0.3	4.1	0.7	2.6	3.9	10.6	28.2
Land	0.1	0.1	0.1		0.1			0.1	0.1	0.6
Sludge Disposal									25.3	25.3
Hazardous Waste Disposal										
Oil Disposal										
Energy & Power		0.7	0.6	0.1	0.7	0.1	0.6	0.3	5.2	8.3
Steam										
Waste Acid										
Crystal Disposal										
Chemical					51.9	0.9				52.8
TOTAL	7.1	8.2	7.6	1.1	67.3	3.5	10.0	14.4	68.5	187.7
Credits										
Scale										
Sinter										
Oil										
Acid Recovery										
TOTAL CREDITS										
NET TOTAL	7.1	8.2	7.6	1.1	67.3	3.5	10.0	14.4	68.5	187.7

KEY TO C&TT STEPS

A: Acid Storage
B: Fume Scrubber Recycle
C: Equalization
D: Surface Skimming
E: Neutralization with Lime
F: Flocculation with Polymer
G: Aeration
H: Clarification
I: Vacuum Filtration

TABLE VIII-24

BPT/PSES-1 TREATMENT MODEL COST: BASIS 7/1/78 DOLLARS

Subcategory : Acid Pickling
Subdivision : Combination
: Continuous Strip/Sheet/Plate

Model Size-TPD : 600
Oper. Days/Year: 320
Turns/Day : 3

C&TT Step	A	B	C	D	E	F	G	H	I	Total
Investment ($ x 10^{-3})	128.8	144.0	229.9	10.3	406.2	23.1	173.0	347.1	510.2	1,972.6
Annual Costs ($ x 10^{-3})										
Capital	11.6	12.9	20.7	0.9	36.5	2.1	15.6	31.2	45.9	177.4
Operation & Maintenance	4.5	5.0	8.0	0.4	14.2	0.8	6.1	12.1	17.9	69.0
Land	0.1	0.1	0.1		0.1			0.1	0.1	0.6
Sludge Disposal									138.2	138.2
Hazardous Waste Disposal										
Oil Disposal										
Energy & Power		3.6	5.7	0.3	4.0	0.7	2.9	1.3	9.3	27.8
Steam										
Waste Acid										
Crystal Disposal										
Chemical					274.7	9.2				283.9
TOTAL	16.2	21.6	34.5	1.6	329.5	12.8	24.6	44.7	211.4	696.9
Credits										
Scale										
Sinter										
Oil										
Acid Recovery										
TOTAL CREDITS										
NET TOTAL	16.2	21.6	34.5	1.6	329.5	12.8	24.6	44.7	211.4	696.9

KEY TO C&TT STEPS

A: Acid Storage
B: Fume Scrubber Recycle
C: Equalization
D: Surface Skimming
E: Neutralization with Lime
F: Flocculation with Polymer
G: Aeration
H: Clarification
I: Vacuum Filtration

TABLE VIII-25

BPT/PSES-1 TREATMENT MODEL COSTS: BASIS 7/1/78 DOLLARS

Subcategory : Acid Pickling
Subdivision : Combination
: Rod/Wire/Coil

Model Size-TPD : 270
Oper. Days/Year: 260
Turns/Day : 3

C&TT Step	A	B	C	D	E	F	G	H	I	Total
Investment ($ x 10^{-3})	85.0	59.1	77.0	8.4	159.7	20.0	86.0	134.9	347.0	977.1
Annual Costs ($ x 10^{-3})										
Capital	7.6	5.3	6.9	0.8	14.4	1.8	7.7	12.1	31.2	87.8
Operation & Maintenance	3.0	2.1	2.7	0.3	5.6	0.7	3.0	4.7	12.1	34.2
Land	0.1	0.1	0.1		0.1			0.1	0.1	0.6
Sludge Disposal									40.6	40.6
Hazardous Waste Disposal										
Oil Disposal										
Energy & Power		0.8	1.4	0.1	0.8	0.1	0.6	0.3	5.6	9.7
Steam										
Waste Acid										
Crystal Disposal										
Chemical					81.4	1.4				82.8
TOTAL	10.7	8.3	11.1	1.2	102.3	4.0	11.3	17.2	89.6	255.7
Credits										
Scale										
Sinter										
Oil										
Acid Recovery										
TOTAL CREDITS										
NET TOTAL	10.7	8.3	11.1	1.2	102.3	4.0	11.3	17.2	89.6	255.7

KEY TO C&TT STEPS

A: Acid Storage
B: Fume Scrubber Recycle
C: Equalization
D: Surface Skimming
E: Neutralization With Lime
F: Flocculation With Polymer
G: Aeration
H: Clarification
I: Vacuum Filtration

TABLE VIII-26

BPT/PSES-1 TREATMENT MODEL COSTS: BASIS 7/1/78 DOLLARS

Subcategory : Acid Pickling
Subdivision : Combination
: Bar/Billet/Bloom

Model Size-TPD : 60
Oper. Days/Year: 260
Turns/Day : 3

C&TT Step	A	B	C	D	E	F	G	H	I	Total
Investment ($ x 10^{-3})	37.0	59.1	37.6	5.3	91.6	20.0	35.4	79.4	304.0	669.4
Annual Costs ($ x 10^{-3})										
Capital	3.3	5.3	3.4	0.5	8.2	1.8	3.2	7.1	27.3	60.1
Operation & Maintenance	1.3	2.1	1.3	0.2	3.2	0.7	1.2	2.8	10.6	23.4
Land	0.1	0.1	0.1		0.1			0.1	0.1	0.6
Sludge Disposal									22.8	22.8
Hazardous Waste Disposal										
Oil Disposal										
Energy & Power		0.7	0.5	0.1	0.6	0.1	0.5	0.2	5.2	7.9
Steam										
Waste Acid										
Crystal Disposal										
Chemical					48.6	0.5				49.1
TOTAL	4.7	8.2	5.3	0.8	60.7	3.1	4.9	10.2	66.0	163.9
Credits										
Scale										
Sinter										
Oil										
Acid Recovery										
TOTAL CREDITS										
NET TOTAL	4.7	8.2	5.3	0.8	60.7	3.1	4.9	10.2	66.0	163.9

KEY TO C&TT STEPS

A: Acid Storage
B: Fume Scrubber Recycle
C: Equalization
D: Surface Skimming
E: Neutralization With Lime
F: Flocculation With Polymer
G: Aeration
H: Clarification
I: Vacuum Filtration

TABLE VIII-27

BPT/PSES-1 TREATMENT MODEL COSTS: BASIS 7/1/78 DOLLARS

Subcategory : Acid Pickling
Subdivision : Combination
: Pipe/Tube

Model Size-TPD : 60
Oper. Days/Year: 260
Turns/Day : 3

C&TT Step	A	B	C	D	E	F	G	H	I	Total
Investment ($ x 10^{-3})	37.0	59.1	44.3	6.8	101.7	20.0	48.6	97.5	304.0	719.0
Annual Costs ($ x 10^{-3})										
Capital	3.3	5.3	4.0	0.6	9.1	1.8	4.4	8.8	27.3	64.6
Operation & Maintenance	1.3	2.1	1.6	0.2	3.6	0.7	1.7	3.4	10.6	25.2
Land	0.1	0.1	0.1		0.1			0.1	0.1	0.6
Sludge Disposal									23.8	23.8
Hazardous Waste Disposal										
Oil Disposal										
Energy & Power		0.7	0.6	0.1	0.7	0.1	0.5	0.2	5.2	8.1
Steam										
Waste Acid										
Crystal Disposal										
Chemical					50.2	0.5				50.7
TOTAL	4.7	8.2	6.3	0.9	63.7	3.1	6.6	12.5	67.0	173.0
Credits										
Scale										
Sinter										
Oil										
Acid Recovery										
TOTAL CREDITS										
NET TOTAL	4.7	8.2	6.3	0.9	63.7	3.1	6.6	12.5	67.0	173.0

KEY TO C&TT STEPS

A: Acid Storage
B: Fume Scrubber Recycle
C: Equalization
D: Surface Skimming
E: Neutralization With Lime
F: Flocculation With Polymer
G: Aeration
H: Clarification
I: Vacuum Filtration

TABLE VIII-28

BPT COST SUMMARY (MILLIONS OF 7/1/78 DOLLARS)
ACID PICKLING SUBCATEGORY

Subdivision		BPT Capital In-Place	BPT Capital Required	BPT Annual In-Place	BPT Annual Required
Sulfuric Acid					
Strip/Sheet/Plate	Neutralization	21.30	1.86	13.13	1.23
Rod/Wire/Coil	Neutralization	12.96	0.51	3.37	0.13
Bar/Billet/Bloom	Neutralization	9.22	0.00	2.93	0.00
Pipe/Tube/Other	Neutralization	7.55	0.42	1.92	0.08
Strip/Sheet/Plate	AU	3.55	0.00	0.54	0.00
Rod/Wire/Coil	AU	3.75	0.00	0.58	0.00
Bar/Billet/Bloom	AU	0.66	0.00	0.00	0.00
Pipe/Tube/Other	AU	0.77	0.00	0.12	0.00
		59.76	2.79	22.59	1.44
Hydrochloric Acid					
Strip/Sheet/Plate	Neutralization	35.81	1.65	22.87	1.46
Rod/Wire/Coil		3.70	0.15	0.75	0.02
Pipe/Tube		0.85	0.10	0.19	0.01
Strip/Sheet/Plate	AR	15.00	0.00	-4.87	0.00
		55.36	1.90	18.94	1.49
Combination Acid					
Batch Strip/Sheet/Plate		3.17	0.03	0.74	0.005
Continuous Strip/Sheet/Plate		17.49	0.08	6.54	0.02
Rod/Wire/Coil		5.70	0.14	1.54	0.02
Bar/Billet/Bloom		0.60	0.00	0.20	0.00
Pipe/Tube		2.56	0.44	0.61	0.08
		29.52	0.69	9.63	0.12
Confidential Plants		3.88	0.80	1.17	0.54
Cost for components installed beyond treatment requirements		12.10	0.00	1.38	0.00
Acid Pickling Total		160.62	6.18	53.71	3.59

Basis: Facilities in-place as of 7/1/78
AU: Acid Recovery
AR: Acid Regeneration

TABLE VIII-29

BAT/PSES TREATMENT MODEL COSTS: BASIS 7/1/78 DOLLARS

Subcategory: Acid Pickling
Subdivision: Sulfuric
: Strip/Sheet/Plate

Model Size - TPD: 1,660
Oper. Days/Year : 320
Turns/Day : 3

C&TT Step	Total BPT	BAT Alternative 1		BAT Alternative 2 Alt. 1 Plus:		BAT Alternative 3 Alt. 1 Plus:		
		J	Total	K	Total	L	M	Total
Investment ($ x 10^{-3})	1,544.7	597.6	597.6	105.4	703.0	2,345.5	25.5	2,968.6
Annual Costs ($ x 10^{-3})								
Capital	138.9	53.7	53.7	9.5	63.2	210.9	2.3	266.9
Operation & Maintenance	54.1	20.9	20.9	3.7	24.6	82.1	0.9	103.9
Land	0.9	0.1	0.1	0.1	0.2	0.1	0.1	0.3
Sludge Disposal	373.9							
Hazardous Waste Disposal								
Oil Disposal	0.1							
Energy & Power	21.5			0.4	0.4	70.2		70.2
Steam								
Waste Acid								
Crystal Disposal								
Chemical	470.1							
TOTAL	1,059.5	74.7	74.7	13.7	88.4	363.3	3.3	441.3
Credits								
Scale								
Sinter								
Oil								
Acid Recovery								
TOTAL CREDITS								
NET TOTAL	1,059.5	74.7	74.7	13.7	88.4	363.3	3.3	441.3

KEY TO TREATMENT ALTERNATIVES

PSES-1 = BPT
PSES-2 = BPT + BAT-1
PSES-3 = BPT + BAT-2
PSES-4 = BPT + BAT-3

KEY TO C&TT STEPS

J: Rinse Reduction
K: Pressure Filtration
L: Vapor Compression Distillation
M: Recycle

TABLE VIII-30

BAT/PSES TREATMENT MODEL COSTS: BASIS 7/1/78 DOLLARS

Subcategory: Acid Pickling
Subdivision: Sulfuric
: Rod/Wire/Coil

Model Size - TPD: 370
Oper. Days/Year : 260
Turns/Day : 3

C&TT Step	Total BPT	BAT Alternative 1		BAT Alternative 2 Alt. 1 Plus:		BAT Alternative 3 Alt. 1 Plus:		
		J	Total	K	Total	L	M	Total
Investment ($ x 10^{-3})	1,026.1	133.2	133.2	39.6	172.8	1,556.0	25.5	1,714.7
Annual Costs ($ x 10^{-3})								
Capital	92.2	12.0	12.0	3.6	15.6	139.9	2.3	154.2
Operation & Maintenance	35.9	4.7	4.7	1.4	6.1	54.5	0.9	60.1
Land	0.6	0.1	0.1	0.1	0.2	0.1	0.1	0.3
Sludge Disposal	81.3							
Hazardous Waste Disposal								
Oil Disposal								
Energy & Power	11.2			0.2	0.2	24.4		24.4
Steam								
Waste Acid								
Crystal Disposal								
Chemical	104.0							
TOTAL	325.2	16.8	16.8	5.3	22.1	218.9	3.3	239.0
Credits								
Scale								
Sinter								
Oil								
Acid Recovery								
TOTAL								
NET TOTAL	325.2	16.8	16.8	5.3	22.1	218.9	3.3	239.0

KEY TO TREATMENT ALTERNATIVES

PSES-1 = BPT
PSES-2 = BPT + BAT-1
PSES-3 = BPT + BAT-2
PSES-4 = BPT + BAT-3

KEY TO C&TT STEPS

J: Rinse Reduction
K: Pressure Filtration
L: Vapor Compression Distillation
M: Recycle

TABLE VIII-31

BAT/PSES TREATMENT MODEL COSTS: BASIS 7/1/78 DOLLARS

Subcategory: Acid Pickling
Subdivision: Sulfuric
: Bar/Billet/Bloom

Model Size - TPD: 720
Oper. Days/Year : 260
Turns/Day : 3

C&TT Step	Total BPT	BAT Alternative 1		BAT Alternative 2 Alt. 1 Plus:		BAT Alternative 3 Alt. 1 Plus:		
		J	Total	K	Total	L	M	Total
Investment ($ x 10^{-3})	1,121.6	259.2	259.2	45.9	305.1	1,608.8	25.5	1,893.5
Annual Costs ($ x 10^{-3})								
Capital	100.7	23.3	23.3	4.1	27.4	144.6	2.3	170.2
Operation & Maintenance	39.4	9.1	9.1	1.6	10.7	56.3	0.9	66.3
Land	0.7	0.1	0.1	0.1	0.2	0.1	0.1	0.3
Sludge Disposal	113.6							
Hazardous Waste Disposal								
Oil Disposal								
Energy & Power	10.8			0.2	0.2	31.4		31.4
Steam								
Waste Acid								
Crystal Disposal								
Chemical	141.4							
Total	406.6	32.5	32.5	6.0	38.5	232.4	3.3	268.2
Credits								
Scale								
Sinter								
Oil								
Acid Recovery								
Total								
Net Total	406.6	32.5	32.5	6.0	38.5	232.4	3.3	268.2

KEY TO TREATMENT ALTERNATIVES

PSES-1 = BPT
PSES-2 = BPT + BAT-1
PSES-3 = BPT + BAT-2
PSES-4 = BPT + BAT-3

KEY TO C&TT STEPS

J: Rinse Reduction
K: Pressure Filtration
L: Vapor Compression Distillation
M: Recycle

TABLE VIII-32

BAT/PSES TREATMENT MODEL COSTS: BASIS 7/1/78 DOLLARS

Subcategory: Acid Pickling
Subdivision: Sulfuric
: Pipe/Tube/Other

Model Size - TPD: 220
Oper. Days/Year : 260
Turns/Day : 3

C&TT Step	Total BPT	BAT Alternative 1		BAT Alternative 2 Alt. 1 Plus:		BAT Alternative 3 Alt. 1 Plus:		
		J	Total	K	Total	L	M	Total
Investment ($ x 10^{-3})	970.9	79.2	79.2	42.0	121.2	1,556.0	25.5	1,660.7
Annual Costs ($ x 10^{-3})								
Capital	87.3	7.1	7.1	3.8	10.9	139.9	2.3	149.3
Operation & Maintenance	33.9	2.8	2.8	1.5	4.3	54.5	0.9	58.2
Land	0.6	0.1	0.1	0.1	0.2	0.1	0.1	0.3
Sludge Disposal	66.8							
Hazardous Waste Disposal								
Oil Disposal	0.1							
Energy & Power	10.1			0.2	0.2	27.3		27.3
Steam								
Waste Acid								
Crystal Disposal								
Chemical	87.3							
Total	286.1	10.0	10.0	5.6	15.6	221.8	3.3	235.1
Credits								
Scale								
Sinter								
Oil								
Acid Recovery								
Total								
Net Total	286.1	10.0	10.0	5.6	15.6	221.8	3.3	235.1

KEY TO TREATMENT ALTERNATIVES

PSES-1 = BPT
PSES-2 = BPT + BAT-1
PSES-3 = BPT + BAT-2
PSES-4 = BPT + BAT-3

KEY TO C&TT STEPS

J: Rinse Reduction
K: Pressure Filtration
L: Vapor Compression Distillation
M: Recycle

TABLE VIII-33

BAT/PSES TREATMENT MODEL COSTS: BASIS 7/1/78 DOLLARS

Subcategory: Acid Pickling
Subdivision: Hydrochloric
: Strip/Sheet/Plate
: Neutralization

Model Size - TPD: 4,020
Oper. Days/Year : 320
Turns/Day : 3

C&TT Step	Total BPT	BAT Alternative 1		BAT Alternative 2 Alt. 1 Plus:		BAT Alternative 3 Alt. 1 Plus:		
		J	Total	K	Total	L	M	Total
Investment ($ x 10^{-3})	2,231.1	1,447.2	1,447.2	160.5	1,607.7	2,708.7	48.4	4,204.3
Annual Costs ($ x 10^{-3})								
Capital	200.6	130.1	130.1	14.4	144.5	243.5	4.3	377.9
Operation & Maintenance	78.1	50.7	50.7	5.6	56.3	94.8	1.7	147.2
Land	0.7	0.1	0.1	0.1	0.2	0.2	0.1	0.4
Sludge Disposal	426.4							
Hazardous Waste Disposal								
Oil Disposal	0.1							
Energy & Power	176.0			1.0	1.0	141.7		141.7
Steam								
Waste Acid								
Crystal Disposal								
Chemical	852.0							
Total	1,733.9	180.9	180.9	21.1	202.0	480.2	6.1	667.2
Credits								
Scale								
Sinter								
Oil								
Acid Recovery								
Total								
Net Total	1,733.9	180.9	180.9	21.1	202.0	480.2	6.1	667.2

KEY TO TREATMENT ALTERNATIVES

PSES-1 = BPT
PSES-2 = BPT + BAT-1
PSES-3 = BPT + BAT-2
PSES-4 = BPT + BAT-3

KEY TO C&TT STEPS

J: Rinse Reduction
K: Pressure Filtration
L: Vapor Compression Distillation
M: Recycle

TABLE VIII-34

BAT/PSES TREATMENT MODEL COSTS: BASIS 7/1/78 DOLLARS

Subcategory: Acid Pickling
Subdivision: Hydrochloric
: Rod/Wire/Coil

Model Size - TPD: 90
Oper. Days/Year : 260
Turns/Day : 3

C&TT Step	Total BPT	BAT Alternative 1		BAT Alternative 2 Alt. 1 Plus:		BAT Alternative 3 Alt. 1 Plus:		
		J	Total	K	Total	L	M	Total
Investment ($ x 10^{-3})	787.2	32.4	32.4	46.6	79.0	1,873.7	25.5	1,931.6
Annual Costs ($ x 10^{-3})								
Capital	70.8	2.9	2.9	4.2	7.1	168.4	2.3	173.6
Operation & Maintenance	27.7	1.1	1.1	1.6	2.7	65.6	0.9	67.6
Land	0.6	0.1	0.1	0.1	0.2	0.1	0.1	0.3
Sludge Disposal	18.2							
Hazardous Waste Disposal								
Oil Disposal								
Energy & Power	8.3			0.2	0.2	32.0		32.0
Steam								
Waste Acid								
Crystal Disposal								
Chemical	63.9							
Total	189.5	4.1	4.1	6.1	10.2	266.1	3.3	273.5
Credits								
Scale								
Sinter								
Oil								
Acid Recovery								
Total								
Net Total	189.5	4.1	4.1	6.1	10.2	266.1	3.3	273.5

KEY TO TREATMENT ALTERNATIVES

PSES-1 = BPT
PSES-2 = BPT + BAT-1
PSES-3 = BPT + BAT-2
PSES-4 = BPT + BAT-3

KEY TO C&TT STEPS

J: Rinse Reduction
K: Pressure Filtration
L: Vapor Compression Distillation
M: Recycle

TABLE VIII-35

BAT/PSES TREATMENT MODEL COSTS: BASIS 7/1/78 DOLLARS

Subcategory: Acid Pickling
Subdivision: Hydrochloric
: Pipe/Tube

Model Size - TPD: 110
Oper. Days/Year : 260
Turns/Day : 3

C&TT Step	Total BPT	BAT Alternative 1		BAT Alternative 2 Alt. 1 Plus:		BAT Alternative 3 Alt. 1 Plus:		
		J	Total	K	Total	L	M	Total
Investment ($ x 10^{-3})	824.7	39.6	39.6	35.4	75.0	1,556.0	25.3	1,620.9
Annual Costs ($ x 10^{-3})								
Capital	74.2	3.6	3.6	3.2	6.8	139.9	2.3	145.8
Operation & Maintenance	29.0	1.4	1.4	1.2	2.6	54.5	0.9	56.8
Land	0.6	0.1	0.1	0.1	0.2	0.1	0.1	0.3
Sludge Disposal	15.7							
Hazardous Waste Disposal								
Oil Disposal								
Energy & Power	7.9			0.2	0.2	20.4		20.4
Steam								
Waste Acid								
Crystal Disposal								
Chemical	47.1							
Total	174.5	5.1	5.1	4.7	9.8	214.9	3.3	223.3
Credits								
Scale								
Sinter								
Oil								
Acid Recovery								
Total								
Net Total	174.5	5.1	5.1	4.7	9.8	214.9	3.3	223.3

KEY TO TREATMENT ALTERNATIVES

PSES-1 = BPT
PSES-2 = BPT + BAT-1
PSES-3 = BPT + BAT-2
PSES-4 = BPT + BAT-3

KEY TO C&TT STEPS

J: Rinse Reduction
K: Pressure Filtration
L: Vapor Compression Distillation
M: Recycle

TABLE VIII-36

BAT/PSES TREATMENT MODEL COSTS: BASIS 7/1/78 DOLLARS

Subcategory: Acid Pickling
Subdivision: Hydrochloric
: Strip/Sheet/Plate
: Acid Regeneration

Model Size - TPD: 4,020
Oper. Days/Year : 320
Turns/Day : 3

C&TT Step	Total BPT	BAT Alternative 1			BAT Alternative 2 Alt. 1 Plus:		BAT Alternative 3 Alt. 1 Plus:		
		K	L	Total	M	Total	N	O	Total
Investment ($ x 10^{-3})	5,056.9	144.6	1,447.2	1,591.8	177.7	1,769.5	2,999.4	53.5	4,644.7
Annual Costs ($ x 10^{-3})									
Capital	454.5	13.0	130.1	143.1	16.0	159.1	269.6	4.8	417.5
Operation & Maintenance	177.0	5.1	50.7	55.8	6.2	62.0	105.0	1.9	162.7
Land	1.7	0.1	0.1	0.2	0.1	0.3	0.2	0.1	0.5
Sludge Disposal	207.2								
Hazardous Waste Disposal									
Oil Disposal									
Energy & Power	292.9	2.9		2.9	1.1	4.0	167.5		170.4
Steam									
Waste Acid									
Crystal Disposal									
Chemical	424.5								
Total	1,557.8	21.1	180.9	202.0	23.4	225.4	542.3	6.8	751.1
Credits									
Scale									
Sinter									
Oil									
Acid Recovery	2,322.4								
Total	2,322.4								
Net Total	-764.6	21.1	180.9	202.0	23.4	225.4	542.3	6.8	751.1

KEY TO TREATMENT ALTERNATIVES

PSES-1 = BPT
PSES-2 = BPT + BAT-1
PSES-3 = BPT + BAT-2
PSES-4 = BPT + BAT-3

KEY TO C&TT STEPS

K: Absorber Vent Scrubber Recycle
L: Rinse Reduction
M: Pressure Filtration
N: Vapor Compression Distillation
O: Recycle

TABLE VIII-37

BAT/PSES TREATMENT MODEL COSTS: BASIS 7/1/78 DOLLARS

Subcategory: Acid Pickling
Subdivision: Combination
: Batch Strip/Sheet/Plate

Model Size - TPD: 150
Oper. Days/Year : 260
Turns/Day : 3

C&TT Step	Total BPT	BAT Alternative 1		BAT Alternative 2 Alt. 1 Plus:		BAT Alternative 3 Alt. 1 Plus:		
		J	Total	K	Total	L	M	Total
Investment ($ x 10^{-3})	806.5	54.0	54.0	33.6	87.6	1,496.0	24.0	1,574.0
Annual Costs ($ x 10^{-3})								
Capital	72.5	4.9	4.9	3.0	7.9	134.5	2.2	141.6
Operation & Maintenance	28.2	1.9	1.9	1.2	3.1	52.4	0.8	55.1
Land	0.6	0.1	0.1	0.1	0.2	0.1	0.1	0.3
Sludge Disposal	25.3							
Hazardous Waste Disposal								
Oil Disposal								
Energy & Power	8.3			0.2	0.2	18.6		18.6
Steam								
Waste Acid								
Crystal Disposal								
Chemical	52.8							
Total	187.7	6.9	6.9	4.5	11.4	205.6	3.1	215.6
Credits								
Scale								
Sinter								
Oil								
Acid Recovery								
Total								
Net Total	187.7	6.9	6.9	4.5	11.4	205.6	3.1	215.6

KEY TO TREATMENT ALTERNATIVES

PSES-1 = BPT
PSES-2 = BPT + BAT-1
PSES-3 = BPT + BAT-2
PSES-4 = BPT + BAT-3

KEY TO C&TT STEPS

J: Rinse Reduction
K: Pressure Filtration
L: Vapor Compression Distillation
M: Recycle

TABLE VIII-38

BAT/PSES TREATMENT MODEL COSTS: BASIS 7/1/78 DOLLARS

Subcategory: Acid Pickling
Subdivision: Combination
: Continuous Strip/Sheet/Plate

Model Size - TPD: 600
Oper. Days/Year : 320
Turns/Day : 3

C&TT Step	Total BPT	BAT Alternative 1		BAT Alternative 2 Alt. 1 Plus:		BAT Alternative 3 Alt. 1 Plus:		
		J	Total	K	Total	L	M	Total
Investment ($ x 10^{-3})	1,972.6	216.0	216.0	151.8	367.8	2,561.6	45.7	2,823.3
Annual Costs ($ x 10^{-3})								
Capital	177.4	19.4	19.4	13.6	33.0	230.3	4.1	253.8
Operation & Maintenance	69.0	7.6	7.6	5.3	12.9	89.7	1.6	98.9
Land	0.6	0.1	0.1	0.1	0.2	0.2	0.1	0.4
Sludge Disposal	138.2							
Hazardous Waste Disposal								
Oil Disposal								
Energy & Power	27.8			0.9	0.9	128.9		128.9
Steam								
Waste Acid								
Crystal Disposal								
Chemical	283.9							
Total	696.9	27.1	27.1	19.9	47.0	449.1	5.8	482.0
Credits								
Scale								
Sinter								
Oil								
Acid Recovery								
Total								
Net Total	696.9	27.1	27.1	19.9	47.0	449.1	5.8	482.0

KEY TO TREATMENT ALTERNATIVES

PSES-1 = BPT
PSES-2 = BPT + BAT-1
PSES-3 = BPT + BAT-2
PSES-4 = BPT + BAT-3

KEY TO C&TT STEPS

J: Rinse Reduction
K: Pressure Filtration
L: Vapor Compression Distillation
M: Recycle

TABLE VIII-39

BAT/PSES TREATMENT MODEL COSTS: BASIS 7/1/78 DOLLARS

Subcategory: Acid Pickling
Subdivision: Combination
: Rod/Wire/Coil

Model Size - TPD: 270
Oper. Days/Year : 260
Turns/Day : 3

C&TT Step	Total BPT	BAT Alternative 1		BAT Alternative 2 Alt. 1 Plus:		BAT Alternative 3 Alt. 1 Plus:		
		J	Total	K	Total	L	M	Total
Investment ($ x 10^{-3})	977.1	97.2	97.2	42.8	140.0	1,556.0	25.5	1,678.7
Annual Costs ($ x 10^{-3})								
Capital	87.8	8.7	8.7	3.8	12.5	139.9	2.3	150.9
Operation & Maintenance	34.2	3.4	3.4	1.5	4.9	54.5	0.9	58.8
Land	0.6	0.1	0.1	0.1	0.2	0.1	0.1	0.3
Sludge Disposal	40.6							
Hazardous Waste Disposal								
Oil Disposal								
Energy & Power	9.7			0.2	0.2	27.9		27.9
Steam								
Waste Acid								
Crystal Disposal								
Chemical	82.8							
Total	255.7	12.2	12.2	5.6	17.8	222.4	3.3	237.9
Credits								
Scale								
Sinter								
Oil								
Acid Recovery								
Total								
Net Total	255.7	12.2	12.2	5.6	17.8	222.4	3.3	237.9

KEY TO TREATMENT ALTERNATIVES

PSES-1 = BPT
PSES-2 = BPT + BAT-1
PSES-3 = BPT + BAT-2
PSES-4 = BPT + BAT-3

KEY TO C&TT STEPS

J: Rinse Reduction
K: Pressure Filtration
L: Vapor Compression Distillation
M: Recycle

TABLE VIII-40

BAT/PSES TREATMENT MODEL COSTS: BASIS 7/1/78 DOLLARS

Subcategory: Acid Pickling
Subdivision: Combination
: Bar/Billet/Bloom

Model Size - TPD: 60
Oper. Days/Year : 260
Turns/Day : 3

C&TT Step	Total BPT	BAT Alternative 1		BAT Alternative 2 Alt. 1 Plus:		BAT Alternative 3 Alt. 1 Plus:		
		J	Total	K	Total	L	M	Total
Investment ($ x 10^{-3})	669.4	21.6	21.6	31.7	53.3	1,454.8	24.0	1,500.4
Annual Costs ($ x 10^{-3})								
Capital	60.1	1.9	1.9	2.8	4.7	130.8	2.2	134.9
Operation & Maintenance	23.4	0.8	0.8	1.1	1.9	50.9	0.8	52.5
Land	0.6	0.1	0.1	0.1	0.2	0.1	0.1	0.3
Sludge Disposal	22.8							
Hazardous Waste Disposal								
Oil Disposal								
Energy & Power	7.9			0.2	0.2	16.9		16.9
Steam								
Waste Acid								
Crystal Disposal								
Chemical	49.1							
Total	163.9	2.8	2.8	4.2	7.0	198.7	3.1	204.6
Credits								
Scale								
Sinter								
Oil								
Acid Recovery								
Total								
Net Total	163.9	2.8	2.8	4.2	7.0	198.7	3.1	204.6

KEY TO TREATMENT ALTERNATIVES

PSES-1 = BPT
PSES-2 = BPT + BAT-1
PSES-3 = BPT + BAT-2
PSES-4 = BPT + BAT-3

KEY TO C&TT STEPS

J: Rinse Reduction
K: Pressure Filtration
L: Vapor Compression Distillation
M: Recycle

TABLE VIII-41

BAT/PSES TREATMENT MODEL COSTS: BASIS 7/1/78 DOLLARS

Subcategory: Acid Pickling
Subdivision: Combination
: Pipe/Tube

Model Size - TPD: 60
Oper. Days/Year : 260
Turns/Day : 3

C&TT Step	Total BPT	BAT Alternative 1		BAT Alternative 2 Alt. 1 Plus:		BAT Alternative 3 Alt. 1 Plus:		
		J	Total	K	Total	L	M	Total
Investment ($ x 10^{-3})	719.0	21.6	21.6	33.6	55.2	1,496.0	24.0	1,541.6
Annual Costs ($ x 10^{-3})								
Capital	64.6	1.9	1.9	3.0	4.9	134.5	2.2	138.6
Operation & Maintenance	25.2	0.8	0.8	1.2	2.0	52.4	0.8	54.0
Land	0.6	0.1	0.1	0.1	0.2	0.1	0.1	0.3
Sludge Disposal	23.8							
Hazardous Waste Disposal								
Oil Disposal								
Energy & Power	8.1			0.2	0.2	18.6		18.6
Steam								
Waste Acid								
Crystal Disposal								
Chemical	50.7							
Total	173.0	2.8	2.8	4.5	7.3	205.6	3.1	211.5
Credits								
Scale								
Sinter								
Oil								
Acid Recovery								
Total								
Net Total	173.0	2.8	2.8	4.5	7.3	205.6	3.1	211.5

KEY TO TREATMENT ALTERNATIVES

PSES-1 = BPT
PSES-2 = BPT + BAT-1
PSES-3 = BPT + BAT-2
PSES-4 = BPT + BAT-3

KEY TO C&TT STEPS

J: Rinse Reduction
K: Pressure Filtration
L: Vapor Compression Distillation
M: Recycle

TABLE VIII-42

BAT COST SUMMARY (MILLIONS OF 7/1/78 DOLLARS)
ACID PICKLING SUBCATEGORY

Subdivision		BAT-1 Capital	BAT-1 Annual	BAT-2 Capital	BAT-2 Annual	BAT-3 Capital	BAT-3 Annual
Sulfuric Acid							
Strip/Sheet/Plate	Neutralization	13.52	1.69	15.90	2.00	67.16	9.98
Rod/Wire/Coil	Neutralization	2.08	0.26	2.70	0.34	26.75	3.73
Bar/Billet/Bloom	Neutralization	3.34	0.42	3.93	0.50	24.05	3.45
Pipe/Tube/Other	Neutralization	1.39	0.17	2.12	0.27	29.08	4.12
		20.33	2.54	24.65	3.11	147.04	21.28
Hydrochloric Acid							
Strip/Sheet/Plate	Neutralization	33.26	4.02	36.83	4.49	94.50	14.82
Rod/Wire/Coil		0.18	0.02	0.51	0.06	10.92	1.55
Pipe/Tube		0.07	0.01	0.13	0.02	2.80	0.38
Strip/Sheet/Plate	AR	5.96	0.74	17.18	0.84	17.38	2.81
		39.47	4.79	54.65	5.41	125.60	19.56
Combination Acid							
Batch Strip/Sheet/Plate		0.45	0.08	13.02	0.10	13.22	1.81
Continuous Strip/Sheet/Plate		3.14	0.39	5.36	0.68	41.09	7.02
Rod/Wire/Coil		0.99	0.12	1.44	0.18	17.09	3.14
Bar/Billet/Bloom		0.06	0.008	0.16	0.02	4.54	0.62
Pipe/Tube		0.21	0.03	0.53	0.07	14.84	2.04
		4.85	0.63	20.51	1.05	90.78	14.63
Confidential Plants		1.14	0.14	2.49	0.18	12.63	1.78
Acid Pickling Total		65.79	8.10	102.30	9.75	376.05	57.25

Basis: Facilities in-place as of 7/1/78

AR: Acid Regeneration

TABLE VIII-43

NSPS/PSNS TREATMENT MODEL COSTS: BASIS 7/1/78 DOLLARS

Subcategory: Acid Pickling
Subdivision: Sulfuric
: Strip/Sheet/Plate

Model Size - TPD: 1,660
Oper. Days/Year : 320
Turns/Day : 3

C&TT Step	NSPS/PSNS Alternative 1										
	A	B	C	D	E	F	G	H	I	J	Total
Investment ($ x 10^{-3})	242.8	59.1	597.6	57.7	8.1	176.9	20.0	77.9	114.0	601.0	1,955.1
Annual Costs ($ x 10^{-3})											
Capital	21.8	5.3	53.7	5.2	0.7	15.9	1.8	7.0	10.2	54.0	175.6
Operation & Maintenance	8.5	2.1	20.9	2.0	0.3	6.2	0.7	2.7	4.0	21.0	68.4
Land	0.1	0.1	0.1	0.1		0.1			0.1	0.4	1.0
Sludge Disposal										373.9	373.9
Hazardous Waste Disposal											
Oil Disposal					0.2						0.2
Energy & Power		1.1		0.7	0.1	1.3	0.1	0.7	0.4	14.3	18.7
Steam											
Waste Acid											
Crystal Disposal											
Chemical						466.6	1.2				467.8
TOTAL	30.4	8.6	74.7	8.0	1.3	490.1	3.8	10.4	14.7	463.6	1,105.6
Credits											
Scale											
Sinter											
Oil											
Acid Recovery											
TOTAL CREDITS											
NET TOTAL	30.4	8.6	74.7	8.0	1.3	490.1	3.8	10.4	14.7	463.6	1,105.6

TABLE VIII-43
NSPS/PSNS TREATMENT COSTS: BASIS 7/1/78 DOLLARS
PAGE 2

	NSPS/PSNS Alternative 2 Alternative 1 Plus:		NSPS/PSNS Alternative 3 Alternative 1 Plus:		
C&TT Step	K	Total	L	M	Total
Investment ($ x 10^{-3})	105.4	2,060.5	2,345.5	25.5	4,326.1
Annual Costs ($ x 10^{-3})					
Capital	9.5	185.1	210.9	2.3	388.8
Operation & Maintenance	3.7	72.1	82.1	0.9	151.4
Land	0.1	1.1	0.1	0.1	1.2
Sludge Disposal		373.9			373.9
Hazardous Waste Disposal					
Oil Disposal		0.2			0.2
Energy & Power	0.4	19.1	70.2		88.9
Steam					
Waste Acid					
Crystal Disposal					
Chemical		467.8			467.8
TOTAL	13.7	1,119.3	363.3	3.3	1,472.2
Credits					
Scale					
Sinter					
Oil					
Acid Recovery					
TOTAL CREDITS					
NET TOTAL	13.7	1,119.3	363.3	3.3	1,472.2

KEY TO C&TT STEPS

A: Acid Storage
B: Fume Scrubber Recycle
C: Rinse Reduction
D: Equalization
E: Surface Skimming
F: Neutralization with Lime
G: Flocculation with Polymer
H: Aeration
I: Clarification
J: Vacuum Filtration
K: Pressure Filtration
L: Vapor Compression Distillation
M: Recycle

TABLE VIII-44

NSPS/PSNS TREATMENT MODEL COSTS: BASIS 7/1/78 DOLLARS

Subcategory: Acid Pickling
Subdivision: Sulfuric
: Rod/Wire/Coil

Model Size - TPD: 370
Oper. Days/Year : 260
Turns/Day : 3

C&TT Step	NSPS/PSNS Alternative 1										
	A	B	C	D	E	F	G	H	I	J	Total
Investment ($ x 10^{-3})	97.2	59.1	133.2	37.6	5.3	143.7	20.0	35.4	81.1	420.6	1,033.2
Annual Costs ($ x 10^{-3})											
Capital	8.7	5.3	12.0	3.4	0.5	12.9	1.8	3.2	7.3	37.8	92.9
Operation & Maintenance	3.4	2.1	4.7	1.3	0.2	5.0	0.7	1.2	2.8	14.7	36.1
Land	0.1	0.1	0.1	0.1		0.1			0.1	0.1	0.7
Sludge Disposal										81.3	81.3
Hazardous Waste Disposal											
Oil Disposal					0.1						0.1
Energy & Power		0.7		0.5	0.1	0.7	0.1	0.5	0.2	6.4	9.2
Steam											
Waste Acid											
Crystal Disposal											
Chemical						103.1	0.5				103.6
TOTAL	12.2	8.2	16.8	5.3	0.9	121.8	3.1	4.9	10.4	140.3	323.9
Credits											
Scale											
Sinter											
Oil											
Acid Recovery											
TOTAL CREDITS											
NET TOTAL	12.2	8.2	16.8	5.3	0.9	121.8	3.1	4.9	10.4	140.3	323.9

TABLE VIII-44
NSPS/PSNS TREATMENT COSTS: BASIS 7/1/78 DOLLARS
PAGE 2

C&TT Step	NSPS/PSNS Alternative 2 Alternative 1 Plus: K	Total	NSPS/PSNS Alternative 3 Alternative 1 Plus: L	M	Total
Investment ($ x 10^{-3})	39.6	1,072.8	1,556.0	25.5	2,614.7
Annual Costs ($ x 10^{-3})					
Capital	3.6	96.5	139.9	2.3	235.1
Operation & Maintenance	1.4	37.5	54.5	0.9	91.5
Land	0.1	0.8	0.1	0.1	0.9
Sludge Disposal		81.3			81.3
Hazardous Waste Disposal					
Oil Disposal		0.1			0.1
Energy & Power	0.2	9.4	24.4		33.6
Steam					
Waste Acid					
Crystal Disposal					
Chemical		103.6			103.6
TOTAL	5.3	329.2	218.9	3.3	546.1
Credits					
Scale					
Sinter					
Oil					
Acid Recovery					
TOTAL CREDITS					
NET TOTAL	5.3	329.2	218.9	3.3	546.1

KEY TO C&TT STEPS

A: Acid Storage
B: Fume Scrubber Recycle
C: Rinse Reduction
D: Equalization
E: Surface Skimming
F: Neutralization with Lime
G: Flocculation with Polymer
H: Aeration
I: Clarification
J: Vacuum Filtration
K: Pressure Filtration
L: Vapor Compression Distillation
M: Recycle

TABLE VIII-45

NSPS/PSNS TREATMENT MODEL COSTS: BASIS 7/1/78 DOLLARS

Subcategory: Acid Pickling
Subdivision: Sulfuric
: Bar/Billet/Bloom

Model Size - TPD: 720
Oper. Days/Year : 260
Turns/Day : 3

C&TT Step	NSPS/PSNS Alternative 1										
	A	B	C	D	E	F	G	H	I	J	Total
Investment ($ x 10^{-3})	147.3	59.1	259.2	39.9	5.7	122.3	20.0	37.9	87.8	513.9	1,293.1
Annual Costs ($ x 10^{-3})											
Capital	13.2	5.3	23.3	3.6	0.5	11.0	1.8	3.4	7.9	46.2	116.2
Operation & Maintenance	5.2	2.1	9.1	1.4	0.2	4.3	0.7	1.3	3.1	18.0	45.4
Land	0.1	0.1	0.1	0.1		0.1			0.1	0.2	0.8
Sludge Disposal										113.6	113.6
Hazardous Waste Disposal											
Oil Disposal					0.1						0.1
Energy & Power		0.8		0.6	0.1	0.7	0.1	0.5	0.2	7.6	10.6
Steam											
Waste Acid											
Crystal Disposal											
Chemical						140.5	0.5				141.0
TOTAL	18.5	8.3	32.5	5.7	0.9	156.6	3.1	5.2	11.3	185.6	427.7
Credits											
Scale											
Sinter											
Oil											
Acid Recovery											
TOTAL CREDITS											
NET TOTAL	18.5	8.3	32.5	5.7	0.9	156.6	3.1	5.2	11.3	185.6	427.7

TABLE VIII-45
NSPS/PSNS TREATMENT COSTS: BASIS 7/1/78 DOLLARS
PAGE 2

C&TT Step	NSPS/PSNS Alternative 2 Alternative 1 Plus: K	Total	NSPS/PSNS Alternative 3 Alternative 1 Plus: L	M	Total
Investment ($ x 10^{-3})	45.9	1,339.0	1,608.8	25.5	2,927.4
Annual Costs ($ x 10^{-3})					
Capital	4.1	120.3	144.6	2.3	263.1
Operation & Maintenance	1.6	47.0	56.3	0.9	102.6
Land	0.1	0.9	0.1	0.1	1.0
Sludge Disposal		113.6			113.6
Hazardous Waste Disposal					
Oil Disposal		0.1			0.1
Energy & Power	0.2	10.8	31.4		42.0
Steam					
Waste Acid					
Crystal Disposal					
Chemical		141.0			141.0
TOTAL	6.0	433.7	232.4	3.3	663.4
Credits					
Scale					
Sinter					
Oil					
Acid Recovery					
TOTAL CREDITS					
NET TOTAL	6.0	433.7	232.4	3.3	663.4

KEY TO C&TT STEPS

A: Acid Storage
B: Fume Scrubber Recycle
C: Rinse Reduction
D: Equalization
E: Surface Skimming
F: Neutralization with Lime
G: Flocculation with Polymer
H: Aeration
I: Clarification
J: Vacuum Filtration
K: Pressure Filtration
L: Vapor Compression Distillation
M: Recycle

TABLE VIII-46

NSPS/PSNS TREATMENT MODEL COSTS: BASIS 7/1/78 DOLLARS

Subcategory: Acid Pickling
Subdivision: Sulfuric
: Pipe/Tube/Other

Model Size - TPD: 220
Oper. Days/Year : 260
Turns/Day : 3

C&TT Step	NSPS/PSNS Alternative 1										
	A	B	C	D	E	F	G	H	I	J	Total
Investment ($ x 10^{-3})	71.5	59.1	79.2	37.6	5.3	152.3	20.0	35.4	83.9	374.1	918.4
Annual Costs ($ x 10^{-3})											
Capital	6.4	5.3	7.1	3.4	0.5	13.7	1.8	3.2	7.5	33.6	82.5
Operation & Maintenance	2.5	2.1	2.8	1.3	0.2	5.3	0.7	1.2	2.9	13.1	32.1
Land	0.1	0.1	0.1	0.1		0.1			0.1	0.1	0.7
Sludge Disposal										66.8	66.8
Hazardous Waste Disposal											
Oil Disposal					0.1						0.1
Energy & Power		0.8		0.5	0.1	0.7	0.1	0.5	0.2	6.2	9.1
Steam											
Waste Acid											
Crystal Disposal											
Chemical						86.4	0.5				86.9
TOTAL	9.0	8.3	10.0	5.3	0.9	106.2	3.1	4.9	10.7	119.8	278.2
Credits											
Scale											
Sinter											
Oil											
Acid Recovery											
TOTAL CREDITS											
NET TOTAL	9.0	8.3	10.0	5.3	0.9	106.2	3.1	4.9	10.7	119.8	278.2

TABLE VIII-46
NSPS/PSNS TREATMENT COSTS: BASIS 7/1/78 DOLLARS
PAGE 2

C&TT Step	NSPS/PSNS Alternative 2 Alternative 1 Plus: K	Total	NSPS/PSNS Alternative 3 Alternative 1 Plus: L	M	Total
Investment ($ x 10^{-3})	42.0	960.4	1,556.0	25.5	2,499.9
Annual Costs ($ x 10^{-3})					
Capital	3.8	86.3	139.9	2.3	224.7
Operation & Maintenance	1.5	33.6	54.5	0.9	87.5
Land	0.1	0.8	0.1	0.1	0.9
Sludge Disposal		66.8			66.8
Hazardous Waste Disposal					
Oil Disposal		0.1			0.1
Energy & Power	0.2	9.3	27.3		36.4
Steam					
Waste Acid					
Crystal Disposal					
Chemical		86.9			86.9
TOTAL	5.6	283.8	221.8	3.3	503.3
Credits					
Scale					
Sinter					
Oil					
Acid Recovery					
TOTAL CREDITS					
NET TOTAL	5.6	283.8	221.8	3.3	503.3

KEY TO C&TT STEPS

A: Acid Storage
B: Fume Scrubber Recycle
C: Rinse Reduction
D: Equalization
E: Surface Skimming
F: Neutralization with Lime
G: Flocculation with Polymer
H: Aeration
I: Clarification
J: Vacuum Filtration
K: Pressure Filtration
L: Vapor Compression Distillation
M: Recycle

TABLE VIII-47

NSPS/PSNS TREATMENT MODEL COSTS: BASIS 7/1/78 DOLLARS

Subcategory: Acid Pickling
Subdivision: Hydrochloric
: Strip/Sheet/Plate

Model Size - TPD: 4,020
Oper. Days/Year : 320
Turns/Day : 3

C&TT Step	NSPS/PSNS Alternative 1										
	A	B	C	D	E	F	G	H	I	J	Total
Investment ($ x 10^{-3})	263.0	59.9	1,447.2	84.4	8.4	453.3	20.0	94.4	157.6	601.0	3,189.2
Annual Costs ($ x 10^{-3})											
Capital	23.6	5.4	130.1	7.6	0.8	40.8	1.8	8.5	14.2	54.0	286.8
Operation & Maintenance	9.2	2.1	50.7	3.0	0.3	15.9	0.7	3.3	5.5	21.0	111.7
Land	0.1	0.1	0.1	0.1		0.1			0.1	0.2	0.8
Sludge Disposal										426.4	426.4
Hazardous Waste Disposal											
Oil Disposal					0.3						0.3
Energy & Power		1.4		2.1	0.1	5.0	0.1	0.7	0.4	157.5	167.3
Steam											
Waste Acid											
Crystal Disposal											
Chemical						840.5	1.7				842.2
TOTAL	32.9	9.0	180.9	12.8	1.5	902.3	4.3	12.5	20.2	659.1	1,835.5
Credits											
Scale											
Sinter											
Oil											
Acid Recovery											
TOTAL CREDITS											
NET TOTAL	32.9	9.0	180.9	12.8	1.5	902.3	4.3	12.5	20.2	659.1	1,835.5

TABLE VIII-47
NSPS/PSNS TREATMENT COSTS: BASIS 7/1/78 DOLLARS
PAGE 2

C&TT Step	NSPS/PSNS Alternative 2 Alternative 1 Plus: K	Total	NSPS/PSNS Alternative 3 Alternative 1 Plus: L	M	Total
Investment ($ x 10^{-3})	160.5	3,349.7	2,708.7	48.4	5,946.3
Annual Costs ($ x 10^{-3})					
Capital	14.4	301.2	243.5	4.3	534.6
Operation & Maintenance	5.6	117.3	94.8	1.7	208.2
Land	0.1	0.9	0.2	0.1	1.1
Sludge Disposal		426.4			426.4
Hazardous Waste Disposal					
Oil Disposal		0.3			0.3
Energy & Power	1.0	168.3	141.7		309.0
Steam					
Waste Acid					
Crystal Disposal					
Chemical		842.2			842.2
TOTAL	21.1	1,856.6	480.2	6.1	2,321.8
Credits					
Scale					
Sinter					
Oil					
Acid Recovery					
TOTAL CREDITS					
NET TOTAL	21.1	1,856.6	480.2	6.1	2,321.8

KEY TO C&TT STEPS

A: Acid Storage
B: Fume Scrubber Recycle
C: Rinse Reduction
D: Equalization
E: Surface Skimming
F: Neutralization with Lime
G: Flocculation with Polymer
H: Aeration
I: Clarification
J: Vacuum Filtration
K: Pressure Filtration
L: Vapor Compression Distillation
M: Recycle

TABLE VIII-48

NSPS/PSNS TREATMENT MODEL COSTS: BASIS 7/1/78 DOLLARS

Subcategory: Acid Pickling
Subdivision: Hydrochloric
: Rod/Wire/Coil

Model Size - TPD: 90
Oper. Days/Year : 260
Turns/Day : 3

C&TT Step	NSPS/PSNS Alternative 1										
	A	B	C	D	E	F	G	H	I	J	Total
Investment ($ x 10^{-3})	37.0	61.9	32.4	39.9	5.8	119.0	20.0	41.2	87.8	294.2	739.2
Annual Costs ($ x 10^{-3})											
Capital	3.3	5.6	2.9	3.6	0.5	10.7	1.8	3.7	7.9	26.5	66.5
Operation & Maintenance	1.3	2.2	1.1	1.4	0.2	4.2	0.7	1.4	3.1	10.3	25.9
Land	0.1	0.1	0.1	0.1		0.1			0.1	0.1	0.7
Sludge Disposal										18.2	18.2
Hazardous Waste Disposal											
Oil Disposal											
Energy & Power		1.2		0.5	0.1	0.7	0.1	0.5	0.3	4.7	8.1
Steam											
Waste Acid											
Crystal Disposal											
Chemical						63.0	0.5				63.5
TOTAL	4.7	9.1	4.1	5.6	0.8	78.7	3.1	5.6	11.4	59.8	182.9
Credits											
Scale											
Sinter											
Oil											
Acid Recovery											
TOTAL CREDITS											
NET TOTAL	4.7	9.1	4.1	5.6	0.8	78.7	3.1	5.6	11.4	59.8	182.9

TABLE VIII-48
NSPS/PSNS TREATMENT COSTS: BASIS 7/1/78 DOLLARS
PAGE 2

C&TT Step	NSPS/PSNS Alternative 2 Alternative 1 Plus: K	Total	NSPS/PSNS Alternative 3 Alternative 1 Plus: L	M	Total
Investment ($ x 10^{-3})	46.6	785.8	1,873.7	25.5	2,638.4
Annual Costs ($ x 10^{-3})					
Capital	4.2	70.7	168.4	2.3	237.2
Operation & Maintenance	1.6	27.5	65.6	0.9	92.4
Land	0.1	0.8	0.1	0.1	0.9
Sludge Disposal		18.2			18.2
Hazardous Waste Disposal					
Oil Disposal					
Energy & Power	0.2	8.3	32.0		40.1
Steam					
Waste Acid					
Crystal Disposal					
Chemical		63.5			63.5
TOTAL	6.1	189.0	266.1	3.3	452.3
Credits					
Scale					
Sinter					
Oil					
Acid Recovery					
TOTAL CREDITS					
NET TOTAL	6.1	189.0	266.1	3.3	452.3

KEY TO C&TT STEPS

A: Acid Storage
B: Fume Scrubber Recycle
C: Rinse Reduction
D: Equalization
E: Surface Skimming
F: Neutralization with Lime
G: Flocculation with Polymer
H: Aeration
I: Clarification
J: Vacuum Filtration
K: Pressure Filtration
L: Vapor Compression Distillation
M: Recycle

TABLE VIII-49

NSPS/PSNS TREATMENT MODEL COSTS: BASIS 7/1/78 DOLLARS

Subcategory: Acid Pickling
Subdivision: Hydrochloric
: Pipe/Tube

Model Size - TPD: 110
Oper. Days/Year : 260
Turns/Day : 3

C&TT Step	NSPS/PSNS Alternative 1										
	A	B	C	D	E	F	G	H	I	J	Total
Investment ($ x 10^{-3})	37.0	59.1	39.6	37.6	5.3	147.6	20.0	32.2	72.4	270.3	721.1
Annual Costs ($ x 10^{-3})											
Capital	3.3	5.3	3.6	3.4	0.5	13.3	1.8	2.9	6.5	24.3	64.9
Operation & Maintenance	1.3	2.1	1.4	1.3	0.2	5.2	0.7	1.1	2.5	9.5	25.3
Land	0.1	0.1	0.1	0.1		0.1			0.1	0.1	0.7
Sludge Disposal										15.7	15.7
Hazardous Waste Disposal											
Oil Disposal					0.1						0.1
Energy & Power		0.7		0.3	0.1	0.7	0.1	0.5	0.2	4.2	6.8
Steam											
Waste Acid											
Crystal Disposal											
Chemical						46.2	0.5				46.7
TOTAL	4.7	8.2	5.1	5.1	0.9	65.5	3.1	4.5	9.3	53.8	160.2
Credits											
Scale											
Sinter											
Oil											
Acid Recovery											
TOTAL CREDITS											
NET TOTAL	4.7	8.2	5.1	5.1	0.9	65.5	3.1	4.5	9.3	53.8	160.2

TABLE VIII-49
NSPS/PSNS TREATMENT COSTS: BASIS 7/1/78 DOLLARS
PAGE 2

C&TT Step	NSPS/PSNS Alternative 2 Alternative 1 Plus: K	Total	NSPS/PSNS Alternative 3 Alternative 1 Plus: L	M	Total
Investment ($ x 10^{-3})	35.4	756.5	1,556.0	25.3	2,302.4
Annual Costs ($ x 10^{-3})					
Capital	3.2	68.1	139.9	2.3	207.1
Operation & Maintenance	1.2	26.5	54.5	0.9	80.7
Land	0.1	0.8	0.1	0.1	0.9
Sludge Disposal		15.7			15.7
Hazardous Waste Disposal					
Oil Disposal		0.1			0.1
Energy & Power	0.2	7.0	20.4		27.2
Steam					
Waste Acid					
Crystal Disposal					
Chemical		46.7			46.7
TOTAL	4.7	164.9	214.9	3.3	378.4
Credits					
Scale					
Sinter					
Oil					
Acid Recovery					
TOTAL CREDITS					
NET TOTAL	4.7	164.9	214.9	3.3	378.4

KEY TO C&TT STEPS

A: Acid Storage
B: Fume Scrubber Recycle
C: Rinse Reduction
D: Equalization
E: Surface Skimming
F: Neutralization with Lime
G: Flocculation with Polymer
H: Aeration
I: Clarification
J: Vacuum Filtration
K: Pressure Filtration
L: Vapor Compression Distillation
M: Recycle

TABLE VIII-50

NSPS/PSNS TREATMENT MODEL COSTS: BASIS 7/1/78 DOLLARS

Subcategory: Acid Pickling
Subdivision: Combination
: Batch Strip/Sheet/Plate

Model Size - TPD: 150
Oper. Days/Year : 260
Turns/Day : 3

C&TT Step	NSPS/PSNS Alternative 1										
	A	B	C	D	E	F	G	H	I	J	Total
Investment ($ x 10^{-3})	56.1	59.1	54.0	37.6	5.3	116.8	20.0	30.6	68.7	304.0	752.2
Annual Costs ($ x 10^{-3})											
Capital	5.0	5.3	4.9	3.4	0.5	10.5	1.8	2.8	6.2	27.3	67.7
Operation & Maintenance	2.0	2.1	1.9	1.3	0.2	4.1	0.7	1.1	2.4	10.6	26.4
Land	0.1	0.1	0.1	0.1		0.1			0.1	0.1	0.7
Sludge Disposal										25.3	25.3
Hazardous Waste Disposal											
Oil Disposal											
Energy & Power		0.7		0.3	0.1	0.7	0.1	0.5	0.2	5.2	7.8
Steam											
Waste Acid											
Crystal Disposal											
Chemical						51.9	0.5				52.4
TOTAL	7.1	8.2	6.9	5.1	0.8	67.3	3.1	4.4	8.9	68.5	180.3
Credits											
Scale											
Sinter											
Oil											
Acid Recovery											
TOTAL CREDITS											
NET TOTAL	7.1	8.2	6.9	5.1	0.8	67.3	3.1	4.4	8.9	68.5	180.3

TABLE VIII-50
NSPS/PSNS TREATMENT COSTS: BASIS 7/1/78 DOLLARS
PAGE 2

C&TT Step	NSPS/PSNS Alternative 2 Alternative 1 Plus: K	Total	NSPS/PSNS Alternative 3 Alternative 1 Plus: L	M	Total
Investment ($ x 10^{-3})	33.6	785.8	1,496.0	24.0	2,272.2
Annual Costs ($ x 10^{-3})					
Capital	3.0	70.7	134.5	2.2	204.4
Operation & Maintenance	1.2	27.6	52.4	0.8	79.6
Land	0.1	0.8	0.1	0.1	0.9
Sludge Disposal		25.3			25.3
Hazardous Waste Disposal					
Oil Disposal					
Energy & Power	0.2	8.0	18.6		26.4
Steam					
Waste Acid					
Crystal Disposal					
Chemical		52.4			52.4
TOTAL	4.5	184.8	205.6	3.1	389.0
Credits					
Scale					
Sinter					
Oil					
Acid Recovery					
TOTAL CREDITS					
NET TOTAL	4.5	184.8	205.6	3.1	389.0

KEY TO C&TT STEPS

A: Acid Storage
B: Fume Scrubber Recycle
C: Rinse Reduction
D: Equalization
E: Surface Skimming
F: Neutralization with Lime
G: Flocculation with Polymer
H: Aeration
I: Clarification
J: Vacuum Filtration
K: Pressure Filtration
L: Vapor Compression Distillation
M: Recycle

TABLE VIII-51

NSPS/PSNS TREATMENT MODEL COSTS: BASIS 7/1/78 DOLLARS

Subcategory: Acid Pickling
Subdivision: Combination
: Continuous Strip/Sheet/Plate

Model Size - TPD: 600
Oper. Days/Year : 320
Turns/Day : 3

C&TT Step	NSPS/PSNS Alternative 1										
	A	B	C	D	E	F	G	H	I	J	Total
Investment ($ x 10^{-3})	128.8	144.0	216.0	79.8	8.4	406.2	20.0	89.1	139.7	510.2	1,742.2
Annual Costs ($ x 10^{-3})											
Capital	11.6	12.9	19.4	7.2	0.8	36.5	1.8	8.0	12.6	45.9	156.7
Operation & Maintenance	4.5	5.0	7.6	2.8	0.3	14.2	0.7	3.1	4.9	17.9	61.0
Land	0.1	0.1	0.1	0.1		0.1			0.1	0.1	0.7
Sludge Disposal										138.2	138.2
Hazardous Waste Disposal											
Oil Disposal					0.1						0.1
Energy & Power		4.3		2.1	0.1	4.0	0.1	0.7	0.4	9.3	21.0
Steam											
Waste Acid											
Crystal Disposal											
Chemical						274.7	1.7				276.4
TOTAL	16.2	22.3	27.1	12.2	1.3	329.5	4.3	11.8	18.0	211.4	654.1
Credits											
Scale											
Sinter											
Oil											
Acid Recovery											
TOTAL CREDITS											
NET TOTAL	16.2	22.3	27.1	12.2	1.3	329.5	4.3	11.8	18.0	211.4	654.1

TABLE VIII-51
NSPS/PSNS TREATMENT COSTS: BASIS 7/1/78 DOLLARS
PAGE 2

C&TT Step	NSPS/PSNS Alternative 2 Alternative 1 Plus: K	Total	NSPS/PSNS Alternative 3 Alternative 1 Plus: L	M	Total
Investment ($ x 10^{-3})	151.8	1,894.0	2,561.6	45.7	4,349.5
Annual Costs ($ x 10^{-3})					
Capital	13.6	170.3	230.3	4.1	391.1
Operation & Maintenance	5.3	66.3	89.7	1.6	152.3
Land	0.1	0.8	0.2	0.1	1.0
Sludge Disposal		138.2			138.2
Hazardous Waste Disposal					
Oil Disposal		0.1			0.1
Energy & Power	0.9	21.9	128.9		149.9
Steam					
Waste Acid					
Crystal Disposal					
Chemical		276.4			276.4
TOTAL	19.9	674.0	449.1	5.8	1,109.0
Credits					
Scale					
Sinter					
Oil					
Acid Recovery					
TOTAL CREDITS					
NET TOTAL	19.9	674.0	449.1	5.8	1,109.0

KEY TO C&TT STEPS

A: Acid Storage
B: Fume Scrubber Recycle
C: Rinse Reduction
D: Equalization
E: Surface Skimming
F: Neutralization with Lime
G: Flocculation with Polymer
H: Aeration
I: Clarification
J: Vacuum Filtration
K: Pressure Filtration
L: Vapor Compression Distillation
M: Recycle

TABLE VIII-52

NSPS/PSNS TREATMENT MODEL COSTS: BASIS 7/1/78 DOLLARS

Subcategory: Acid Pickling
Subdivision: Combination
: Rod/Wire/Coil

Model Size - TPD: 270
Oper. Days/Year : 260
Turns/Day : 3

C&TT Step	NSPS/PSNS Alternative 1										
	A	B	C	D	E	F	G	H	I	J	Total
Investment ($ x 10^{-3})	85.0	59.1	97.2	37.6	5.3	159.7	20.0	35.4	83.9	347.0	930.2
Annual Costs ($ x 10^{-3})											
Capital	7.6	5.3	8.7	3.4	0.5	14.4	1.8	3.2	7.5	31.2	83.6
Operation & Maintenance	3.0	2.1	3.4	1.3	0.2	5.6	0.7	1.2	2.9	12.1	32.5
Land	0.1	0.1	0.1	0.1		0.1			0.1	0.1	0.7
Sludge Disposal										40.6	40.6
Hazardous Waste Disposal											
Oil Disposal											
Energy & Power		0.8		0.5	0.1	0.8	0.1	0.5	0.2	5.6	8.6
Steam											
Waste Acid											
Crystal Disposal											
Chemical						81.4	0.5				81.9
TOTAL	10.7	8.3	12.2	5.3	0.8	102.3	3.1	4.9	10.7	89.6	247.9
Credits											
Scale											
Sinter											
Oil											
Acid Recovery											
TOTAL CREDITS											
NET TOTAL	10.7	8.3	12.2	5.3	0.8	102.3	3.1	4.9	10.7	89.6	247.9

TABLE VIII-52
NSPS/PSNS TREATMENT COSTS: BASIS 7/1/78 DOLLARS
PAGE 2

C&TT Step	NSPS/PSNS Alternative 2 Alternative 1 Plus: K	Total	NSPS/PSNS Alternative 3 Alternative 1 Plus: L	M	Total
Investment ($ x 10^{-3})	42.8	973.0	1,556.0	25.5	2,511.7
Annual Costs ($ x 10^{-3})					
Capital	3.8	87.4	139.9	2.3	225.8
Operation & Maintenance	1.5	34.0	54.5	0.9	87.9
Land	0.1	0.8	0.1	0.1	0.9
Sludge Disposal		40.6			40.6
Hazardous Waste Disposal					
Oil Disposal					
Energy & Power	0.2	8.8	27.9		36.5
Steam					
Waste Acid					
Crystal Disposal					
Chemical		81.9			81.9
TOTAL	5.6	253.5	222.4	3.3	473.6
Credits					
Scale					
Sinter					
Oil					
Acid Recovery					
TOTAL CREDITS					
NET TOTAL	5.6	253.5	222.4	3.3	473.6

KEY TO C&TT STEPS

A: Acid Storage
B: Fume Scrubber Recycle
C: Rinse Reduction
D: Equalization
E: Surface Skimming
F: Neutralization with Lime
G: Flocculation with Polymer
H: Aeration
I: Clarification
J: Vacuum Filtration
K: Pressure Filtration
L: Vapor Compression Distillation
M: Recycle

TABLE VIII-53

NSPS/PSNS TREATMENT MODEL COSTS: BASIS 7/1/78 DOLLARS

Subcategory: Acid Pickling
Subdivision: Combination
: Bar/Billet/Bloom

Model Size - TPD: 60
Oper. Days/Year : 260
Turns/Day : 3

C&TT Step	NSPS/PSNS Alternative 1										
	A	B	C	D	E	F	G	H	I	J	Total
Investment ($ x 10^{-3})	37.0	59.1	21.6	36.1	5.3	91.6	20.0	28.9	68.7	304.0	672.3
Annual Costs ($ x 10^{-3})											
Capital	3.3	5.3	1.9	3.2	0.5	8.2	1.8	2.6	6.2	27.3	60.3
Operation & Maintenance	1.3	2.1	0.8	1.3	0.2	3.2	0.7	1.0	2.4	10.6	23.6
Land	0.1	0.1	0.1	0.1		0.1			0.1	0.1	0.7
Sludge Disposal										22.8	22.8
Hazardous Waste Disposal											
Oil Disposal											
Energy & Power		0.7		0.3	0.1	0.6	0.1	0.5	0.2	5.2	7.7
Steam											
Waste Acid											
Crystal Disposal											
Chemical						48.6	0.5				49.1
TOTAL	4.7	8.2	2.8	4.9	0.8	60.7	3.1	4.1	8.9	66.0	164.2
Credits											
Scale											
Sinter											
Oil											
Acid Recovery											
TOTAL CREDITS											
NET TOTAL	4.7	8.2	2.8	4.9	0.8	60.7	3.1	4.1	8.9	66.0	164.2

TABLE VIII-53
NSPS/PSNS TREATMENT COSTS: BASIS 7/1/78 DOLLARS
PAGE 2

C&TT Step	NSPS/PSNS Alternative 2 Alternative 1 Plus: K	Total	NSPS/PSNS Alternative 3 Alternative 1 Plus: L	M	Total
Investment ($ x 10^{-3})	31.7	704.0	1,454.8	24.0	2,151.1
Annual Costs ($ x 10^{-3})					
Capital	2.8	63.1	130.8	2.2	193.3
Operation & Maintenance	1.1	24.7	50.9	0.8	75.3
Land	0.1	0.8	0.1	0.1	0.9
Sludge Disposal		22.8			22.8
Hazardous Waste Disposal					
Oil Disposal					
Energy & Power	0.2	7.9	16.9		24.6
Steam					
Waste Acid					
Crystal Disposal					
Chemical		49.1			49.1
TOTAL	4.2	168.4	198.7	3.1	366.0
Credits					
Scale					
Sinter					
Oil					
Acid Recovery					
TOTAL CREDITS					
NET TOTAL	4.2	168.4	198.7	3.1	366.0

KEY TO C&TT STEPS

A: Acid Storage
B: Fume Scrubber Recycle
C: Rinse Reduction
D: Equalization
E: Surface Skimming
F: Neutralization with Lime
G: Flocculation with Polymer
H: Aeration
I: Clarification
J: Vacuum Filtration
K: Pressure Filtration
L: Vapor Compression Distillation
M: Recycle

TABLE VIII-54

NSPS/PSNS TREATMENT MODEL COSTS: BASIS 7/1/78 DOLLARS

Subcategory: Acid Pickling
Subdivision: Combination
: Pipe/Tube

Model Size - TPD: 60
Oper. Days/Year : 260
Turns/Day : 3

C&TT Step	NSPS/PSNS Alternative 1										
	A	B	C	D	E	F	G	H	I	J	Total
Investment ($ x 10^{-3})	37.0	59.1	21.6	37.6	5.3	101.7	20.0	30.6	68.7	304.0	685.6
Annual Costs ($ x 10^{-3})											
Capital	3.3	5.3	1.9	3.4	0.5	9.1	1.8	2.8	6.2	27.3	61.6
Operation & Maintenance	1.3	2.1	0.8	1.3	0.2	3.6	0.7	1.1	2.4	10.6	24.1
Land	0.1	0.1	0.1	0.1		0.1			0.1	0.1	0.7
Sludge Disposal										23.8	23.8
Hazardous Waste Disposal											
Oil Disposal											
Energy & Power		0.7		0.3	0.1	0.7	0.1	0.5	0.2	5.2	7.8
Steam											
Waste Acid											
Crystal Disposal											
Chemical						50.2	0.5				50.7
TOTAL	4.7	8.2	2.8	5.1	0.8	63.7	3.1	4.4	8.9	67.0	168.7
Credits											
Scale											
Sinter											
Oil											
Acid Recovery											
TOTAL CREDITS											
NET TOTAL	4.7	8.2	2.8	5.1	0.8	63.7	3.1	4.4	8.9	67.0	168.7

TABLE VIII-54
NSPS/PSNS TREATMENT COSTS: BASIS 7/1/78 DOLLARS
PAGE 2

C&TT Step	NSPS/PSNS Alternative 2 Alternative 1 Plus: K	Total	NSPS/PSNS Alternative 3 Alternative 1 Plus: L	M	Total
Investment ($ x 10^{-3})	33.6	719.2	1,496.0	24.0	2,205.6
Annual Costs ($ x 10^{-3})					
Capital	3.0	64.6	134.5	2.2	198.3
Operation & Maintenance	1.2	25.3	52.4	0.8	77.3
Land	0.1	0.8	0.1	0.1	0.9
Sludge Disposal		23.8			23.8
Hazardous Waste Disposal					
Oil Disposal					
Energy & Power	0.2	8.0	18.6		26.4
Steam					
Waste Acid					
Crystal Disposal					
Chemical		50.7			50.7
TOTAL	4.5	173.2	205.6	3.1	377.4
Credits					
Scale					
Sinter					
Oil					
Acid Recovery					
TOTAL CREDITS					
NET TOTAL	4.5	173.2	205.6	3.1	377.4

KEY TO C&TT STEPS

A: Acid Storage
B: Fume Scrubber Recycle
C: Rinse Reduction
D: Equalization
E: Surface Skimming
F: Neutralization with Lime
G: Flocculation with Polymer
H: Aeration
I: Clarification
J: Vacuum Filtration
K: Pressure Filtration
L: Vapor Compression Distillation
M: Recycle

TABLE VIII-55

PSES COST SUMMARY (MILLIONS OF 7/1/78 DOLLARS)
ACID PICKLING SUBCATEGORY

Subdivision		PSES-1 Capital In-Place	PSES-1 Capital Required	PSES-1 Annual In-Place	PSES-1 Annual Required	PSES-2 Capital	PSES-2 Annual	PSES-3 Capital	PSES-3 Annual	PSES-4 Capital	PSES-4 Annual
Sulfuric Acid											
Strip/Sheet/Plate	Neutralization	1.11	1.44	0.80	0.79	0.90	0.11	1.06	0.13	4.47	0.66
Rod/Wire/Coil	Neutralization	3.05	3.82	1.05	1.16	1.19	0.15	1.55	0.20	15.56	2.17
Bar/Billet/Bloom	Neutralization	0.53	1.18	0.23	0.42	0.46	0.06	0.54	0.07	3.31	0.48
Pipe/Tube/Other	Neutralization	1.42	0.64	0.41	0.20	0.29	0.04	0.44	0.06	6.04	0.86
		6.11	7.08	2.49	2.57	2.84	0.36	3.59	0.46	29.38	4.17
Hydrochloric Acid											
Strip/Sheet/Plate	Neutralization	1.74	0.02	1.59	0.01	1.86	0.23	2.07	0.26	5.41	0.86
Rod/Wire/Coil		1.18	3.52	0.40	0.75	0.25	0.03	0.62	0.08	15.04	2.13
Pipe/Tube		0.01	0.02	0.003	0.003	0.001	0	0.003	0	0.06	0.008
Strip/Sheet/Plate	AR	0	0	0	0	0	0	0	0	0	0
		2.93	3.56	1.99	0.76	2.11	0.26	2.69	0.34	20.51	3.00
Combination Acid											
Batch Strip/Sheet/Plate		0	0	0	0	0	0	0	0	0	0
Continuous Strip/Sheet/Plate		0.02	0.33	0.003	0.12	0.04	0.005	0.07	0.008	0.50	0.09
Rod/Wire/Coil		1.28	1.93	0.39	0.48	0.41	0.05	0.59	0.08	7.08	1.00
Bar/Billet/Bloom		0.44	0.11	0.15	0.03	0.04	0.005	0.10	0.01	2.72	0.37
Pipe/Tube		0.25	0.85	0.07	0.21	0.04	0.005	0.11	0.01	2.97	0.41
		1.99	3.22	0.61	0.84	0.53	0.06	0.87	0.11	13.27	1.87
Confidential Plants		1.73	1.43	0.63	0.35	0.53	0.07	0.76	0.10	9.61	1.34
Costs for components installed beyond treatment requirements		0.99	0	0.13	0	-	-	-	-	-	-
Acid Pickling Total		13.75	15.29	5.85	4.52	6.01	0.75	7.91	1.01	72.77	10.38

Note: Costs corresponding to PSES alternatives 2 through 4 are in addition to PSES-1 costs.

Basis: Facilities in-place as of 7/1/78
AR: Acid Regeneration

TABLE VIII-56

ENERGY REQUIREMENTS DUE TO BPT POLLUTION CONTROL
ACID PICKLING SUBCATEGORY

Subdivision		BPT (kwh/yr) No. of Plants	Model Plant	Subdivision
Sulfuric Acid				
Strip/Sheet/Plate	Neutralization	23	860,000	19,780,000
Rod/Wire/Coil	Neutralization	16	448,000	7,168,000
Bar/Billet/Bloom	Neutralization	15	432,000	6,480,000
Pipe/Tube/Other	Neutralization	17	404,000	6,868,000
Strip/Sheet/Plate	AU	2	2,148,000	4,296,000
Rod/Wire/Coil	AU	5	396,000	1,980,000
Bar/Billet/Bloom	AU	0	744,000	0
Pipe/Tube/Other	AU	1	232,000	232,000
				46,804,000
Hydrochloric Acid				
Strip/Sheet/Plate	Neutralization	21	7,040,000	147,840,000
Rod/Wire/Coil		7	332,000	2,324,000
Pipe/Tube		2	316,000	632,000
Strip/Sheet/Plate	AR	4	11,716,000	46,864,000
				197,660,000
Combination Acid				
Batch Strip/Sheet/Plate		9	332,000	2,988,000
Continuous Strip/Sheet/Plate		14	1,112,000	15,568,000
Rod/Wire/Coil		9	388,000	3,492,000
Bar/Billet/Bloom		3	316,000	948,000
Pipe/Tube		11	324,000	3,564,000
				26,560,000
Acid Pickling Total				271,024,000

AU: Acid Recovery
AR: Acid Regeneration

TABLE VIII-57

ENERGY REQUIREMENTS DUE TO BAT POLLUTION CONTROL
ACID PICKLING SUBCATEGORY

Subdivision		No. of Plants	BAT-1 (kwh/yr) Model Plant	BAT-1 (kwh/yr) Subdivision	BAT-2 (kwh/yr) Model Plant	BAT-2 (kwh/yr) Subdivision	BAT-3 (kwh/yr) Model Plant	BAT-3 (kwh/yr) Subdivision
Sulfuric Acid								
Strip/Sheet/Plate	Neutralization	23	0	0	16,000	368,000	2,808,000	64,584,000
Rod/Wire/Coil	Neutralization	16	0	0	8,000	128,000	976,000	15,616,000
Bar/Billet/Bloom	Neutralization	15	0	0	8,000	120,000	1,256,000	18,840,000
Pipe/Tube/Other	Neutralization	17	0	0	8,000	136,000	1,092,000	18,564,000
				0		752,000		117,604,000
Hydrochloric Acid								
Strip/Sheet/Plate	Neutralization	21	0	0	40,000	840,000	5,668,000	119,028,000
Rod/Wire/Coil		7	0	0	8,000	56,000	1,280,000	8,960,000
Pipe/Tube		2	0	0	8,000	16,000	816,000	1,632,000
Strip/Sheet/Plate	AR	4	116,000	464,000	160,000	640,000	6,816,000	27,264,000
				464,000		1,552,000		156,884,000
Combination Acid								
Batch Strip/Sheet/Plate		9	0	0	8,000	72,000	744,000	6,696,000
Continuous Strip/Sheet/Plate		14	0	0	36,000	504,000	5,156,000	72,184,000
Rod/Wire/Coil		9	0	0	8,000	72,000	1,116,000	10,044,000
Bar/Billet/Bloom		3	0	0	8,000	24,000	676,000	2,028,000
Pipe/Tube		11	0	0	8,000	88,000	744,000	8,184,000
				0		760,000		99,136,000
Acid Pickling Total				0		3,064,000		373,624,000

AR: Acid Regeneration

TABLE VIII-58

MODEL PLANT ENERGY REQUIREMENTS DUE TO NSPS/PSNS POLLUTION CONTROL
ACID PICKLING SUBCATEGORY

Subdivision	NSPS-1/PSNS-1 (kwh/yr)	NSPS-2/PSNS-2 (kwh/yr)	NSPS-3/PSNS-3 (kwh/yr)
Sulfuric Acid			
Strip/Sheet/Plate	320,000	16,000	2,808,000
Rod/Wire/Coil	200,000	8,000	976,000
Bar/Billet/Bloom	244,000	8,000	1,256,000
Pipe/Tube/Other	192,000	8,000	1,092,000
Hydrochloric Acid			
Strip/Sheet/Plate	344,000	40,000	5,668,000
Rod/Wire/Coil	160,000	8,000	1,280,000
Pipe/Tube	128,000	8,000	816,000
Combination Acid			
Batch Strip/Sheet/Plate	128,000	8,000	744,000
Continuous Strip/Sheet/Plate	508,000	36,000	5,156,000
Rod/Wire/Coil	148,000	8,000	1,116,000
Bar/Billet/Bloom	112,000	8,000	676,000
Pipe/Tube	112,000	8,000	744,000

Note: Energy requirements corresponding to NSPS/PSNS 2 and 3 are in addition to NSPS/PSNS-1 energy requirements.

TABLE VIII-59

ENERGY REQUIREMENTS DUE TO PSES POLLUTION CONTROL
ACID PICKLING SUBCATEGORY

Subdivision		No. of Plants	PSES-1 (kwh/yr) Model Plant	PSES-1 (kwh/yr) Subdivision	PSES-2 (kwh/yr) Model Plant	PSES-2 (kwh/yr) Subdivision	PSES-3 (kwh/yr) Model Plant	PSES-3 (kwh/yr) Subdivision	PSES-4 (kwh/yr) Model Plant	PSES-4 (kwh/yr) Subdivision
Sulfuric Acid										
Strip/Sheet/Plate	Neutralization	4	860,000	3,440,000	0	0	16,000	64,000	2,808,000	11,232,000
Rod/Wire/Coil	Neutralization	18	448,000	8,064,000	0	0	8,000	144,000	976,000	17,568,000
Bar/Billet/Bloom	Neutralization	3	432,000	1,296,000	0	0	8,000	24,000	1,256,000	3,768,000
Pipe/Tube/Other	Neutralization	9	404,000	3,636,000	0	0	8,000	72,000	1,092,000	9,828,000
				16,436,000		0		304,000		42,396,000
Hydrochloric Acid										
Strip/Sheet/Plate	Neutralization	3	7,040,000	21,120,000	0	0	40,000	120,000	5,668,000	17,004,000
Rod/Wire/Coil		8	332,000	2,656,000	0	0	8,000	64,000	1,280,000	10,240,000
Pipe/Tube		1	316,000	316,000	0	0	8,000	8,000	816,000	816,000
Strip/Sheet/Plate	AR	0	11,716,000	0	116,000	0	160,000	0	6,816,000	0
				24,092,000		0		192,000		28,060,000
Combination Acid										
Batch Strip/Sheet/Plate		0	332,000	0	0	0	8,000	0	744,000	0
Continuous Strip/Sheet/Plate		1	1,112,000	1,112,000	0	0	36,000	36,000	5,156,000	5,156,000
Rod/Wire/Coil		8	388,000	3,104,000	0	0	8,000	64,000	1,116,000	8,928,000
Bar/Billet/Bloom		1	316,000	316,000	0	0	8,000	8,000	676,000	676,000
Pipe/Tube		8	324,000	2,592,000	0	0	8,000	64,000	744,000	5,952,000
				7,124,000		0		172,000		20,712,000
Acid Pickling Total				47,652,000		0		668,000		91,168,000

Note: Energy requirements corresponding to PSES alternatives 2 through 4 are in addition to PSES-1 energy requirements.

AR: Acid Regeneration

TABLE VIII-60

SOLID WASTE GENERATION DUE TO WATER POLLUTION CONTROL
ACID PICKLING SUBCATEGORY

Subdivision	BPT (tons/yr) No. of Plants	BPT Model Plant	BPT Subdivision	BAT (tons/yr) No. of Plants	BAT Model Plant	BAT Subdivision	PSES (tons/yr) No. of Plants	PSES Model Plant	PSES Subdivision
Sulfuric Acid									
Strip/Sheet/Plate Neutralization	23	74,780	1,719,940	23	0	0	4	74,780	299,120
Rod/Wire/Coil Neutralization	16	16,260	260,160	16	0	0	18	16,260	292,680
Bar/Billet/Bloom Neutralization	15	22,720	340,800	15	0	0	3	22,720	68,160
Pipe/Tube/Other Neutralization	17	13,360	227,120	17	0	0	9	13,360	120,240
Strip/Sheet/Plate AU(1)	2	13,440	26,880	2	-	-	0	-	-
Rod/Wire/Coil AU(1)	5	2,340	11,700	5	-	-	0	-	-
Bar/Billet/Bloom AU(1)	0	4,680	0	0	-	-	0	-	-
Pipe/Tube/Other AU(1)	1	1,560	1,560	1	-	-	0	-	-
			2,588,160			0			780,200
Hydrochloric Acid									
Strip/Sheet/Plate Neutralization	21	85,280	1,790,880	21	0	0	3	85,280	255,840
Rod/Wire/Coil	7	3,640	25,480	7	0	0	8	3,640	29,120
Pipe/Tube	2	3,140	6,280	2	0	0	1	3,140	3,140
Strip/Sheet/Plate AR	4	41,440	165,760	4	0	0	0	41,440	0
			1,988,400			0			288,100
Combination Acid									
Batch Strip/Sheet/Plate	9	5,060	45,540	9	0	0	0	5,060	0
Continuous Strip/Sheet/Plate	14	27,640	386,960	14	0	0	1	27,640	27,640
Rod/Wire/Coil	9	8,120	73,080	9	0	0	8	8,120	64,960
Bar/Billet/Bloom	3	4,560	13,680	3	0	0	1	4,560	4,560
Pipe/Tube	11	4,760	52,360	11	0	0	8	4,760	38,080
			571,620			0			135,240
Acid Pickling Total			5,148,180			0			1,203,540

(1): Ferrous sulfate crystal disposal
0 : No limitations/standards beyond the BPT level are being promulgated for this subdivision.
AU : Acid Recovery
AR : Acid Regeneration

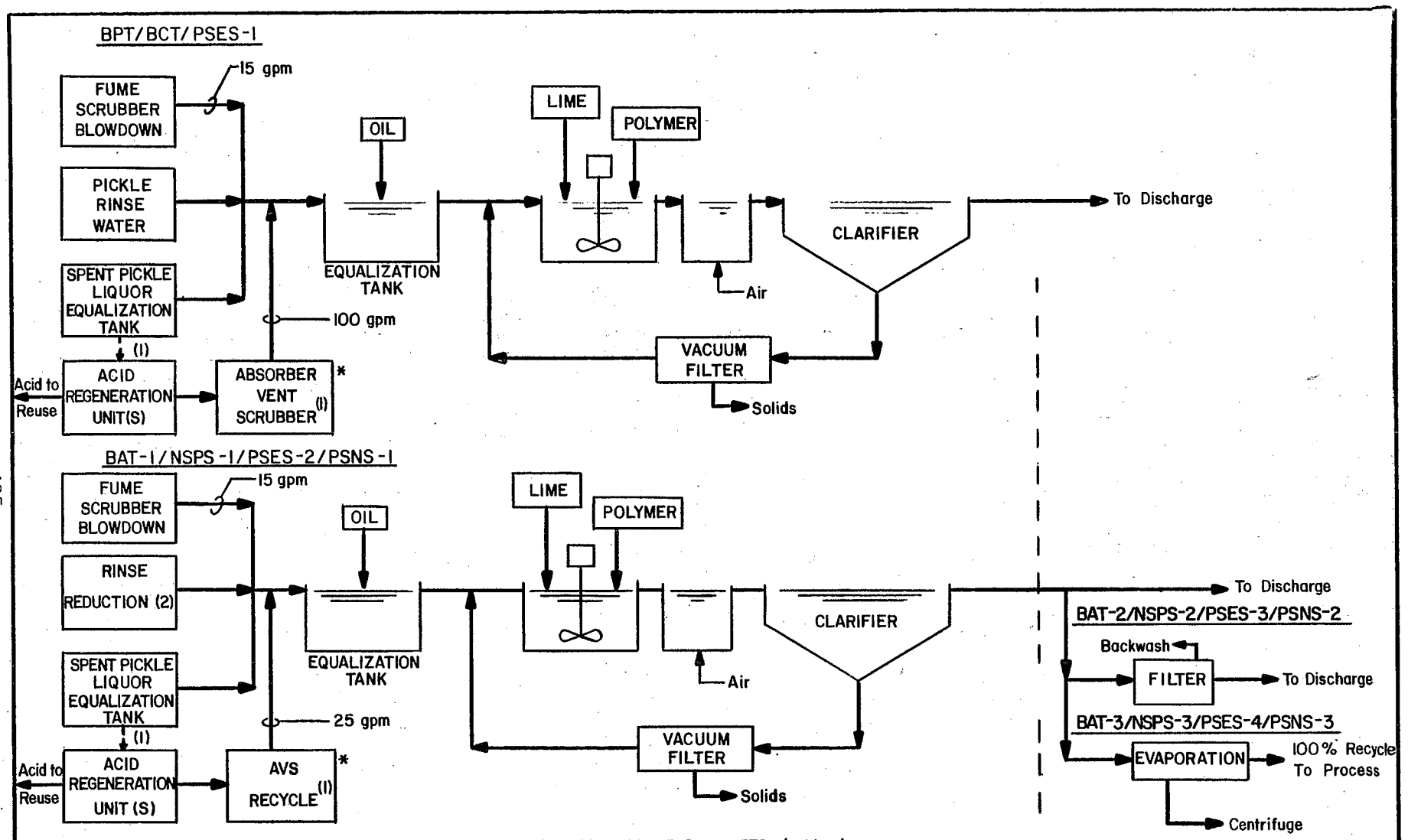

(1) Hydrochloric Acid Regeneration Systems Only at BPT, BAT, BCT and PSES.

(2) Reduces Rinse Flows by 90 %

* Replaces Spent Pickle Liquor Allowance for Hydrochloric Acid Regeneration System.

BPT/BCT/PSES-1 RINSEWATER FLOW RATES (gal/ton)

	SULFURIC	HYDROCHLORIC	COMBINATION
ROD/WIRE/COIL	260	480	490
BAR/BILLET/BLOOM	70	—	210
PIPE/TUBE/OTHER	480	1,010	750
STRIP/SHEET/PLATE (Cont.)	160	270	1,480
STRIP/SHEET/PLATE (Batch)	—	—	440
SPENT PICKLE LIQUOR	20	10	20

ENVIRONMENTAL PROTECTION AGENCY

STEEL INDUSTRY STUDY
ACID PICKLING
TREATMENT ALTERNATIVES

Dwn. 12/28/81

FIGURE VIII-1

ACID PICKLING SUBCATEGORY

SECTION IX

EFFLUENT QUALITY ATTAINABLE THROUGH THE APPLICATION OF THE BEST PRACTICABLE CONTROL TECHNOLOGY CURRENTLY AVAILABLE

Introduction

The Agency has promulgated BPT limitations which are based on the same model treatment technologies used as the basis for the BPT limitations originally promulgated in 1976 and those proposed in January 1981 (46 FR 1858). Reanalysis of the flow data for this subcategory indicates that each of the acid pickling subdivisions should be further segmented by product type. The Agency also determined that discharges from fume and absorber vent scrubbers should be separately limited. Each subdivision has been segmented accordingly. In addition, the Agency decided not to establish effluent limitations on the basis of acid regeneration or recovery. The promulgated BPT limitations have been established on the basis of lime precipitation and sedimentation. Appropriate allowances have been made for hydrochloric acid regeneration operations. A review of the treatment processes and effluent limitations associated with the acid pickling subcategory follows.

Identification of BPT

The BPT model treatment system described in this section is identical to the system used to develop the originally promulgated BPT limitations and those proposed in January 1981. The basic methods of treatment in use in the acid pickling subcategory are described below:

1. Neutralization/Lime Precipitation

   Neutralization of acid pickling wastewaters is widely practiced at sulfuric, hydrochloric, and combination acid pickling operations. The basic treatment system combines spent pickle liquor, rinsewater, and fume scrubber blowdown in a second equalization basin. An oil separator is included to remove tramp oil. Lime and polymer are then added to the wastewaters in a mixing tank. The lime neutralizes the acidic waste and forms metal hydroxide precipitates, while the polymer serves as a flocculant. Aeration is also provided to oxidize the iron in the wastewater from the ferrous to the ferric state. The suspended solids, which are composed of the metal hydroxide precipitates, calcium sulfate, and unreacted lime are gravity separated in clarifiers. The sludge underflow from the clarifiers is dewatered in vacuum filters. The filtrates from the vacuum filters are returned to the clarifiers.

2. Acid Recovery

Acid recovery is practiced in the sulfuric acid pickling subdivision. A spent acid storage system and the acid recovery system, including storage for the recovered acid and the ferrous sulfate crystal by-product, are the major components necessary for acid recovery. This method crystallizes the iron salts out of the pickling wastewater. The sulfuric acid which remains is then strengthened to its original concentration for reuse. This treatment model achieves zero discharge.

3. Acid Regeneration

Acid regeneration is practiced in the hydrochloric acid pickling subdivision as an alternative to neutralizing the spent pickle liquor. The ferrous chloride in the spent pickle liquor is hydrolyzed to an iron oxide by-product and HCl gas. The gas is then absorbed to reform hydrochloric acid. The gasses passing through the absorber contain some residual amounts of HCl gas and other contaminants, and are scrubbed with water before venting to the atmosphere. These absorber vent scrubber wastewaters, discharged on a once-through basis, are normally combined with the other pickling wastewaters for treatment.

4. Fume Scrubber Recycle

Recycle of fume scrubber waters is widely practiced in the industry. The scrubber waters are collected in a tank and then pumped back to the scrubber for reuse. The blowdown from the recycle system is combined with other pickling wastewaters for treatment in a common system.

The treatment systems described above are in use at many acid pickling operations.

The BPT model treatment system includes equalization of spent pickle liquor; fume scrubber recycle; equalization of spent pickle liquor, rinsewater, fume scrubber blowdown, and absorber vent scrubber wastewaters, where applicable; lime neutralization/precipitation; polymer addition; aeration; clarification; and vacuum filtration. This model treatment system, which applies to each product segment of each subdivision, is diagrammed in Figure IX-1.

Although acid recovery and regeneration are practiced in the industry, these treatment technologies are not being used as the basis for the BPT limitations. In the original regulation of 1976, acid recovery was used as a basis for establishing a zero discharge standard for those batch sulfuric acid pickling operations without existing neutralization facilities. The Agency found that nearly all pickling operations have existing neutralization facilities. The Agency, therefore, eliminated this subdivision and the associated zero discharge standard. Additionally, a zero discharge standard has not been established for all sulfuric acid pickling operations, since it

would be inappropriate to require the dismantling of existing wastewater treatment facilities and the installation of acid recovery systems.

The BPT limitations do not require the use of the model treatment system presented in this section. Any system which achieves the limitations is acceptable. The model flow, pollutant concentration basis, and the 30-day average BPT effluent limitations are presented in Table IX-1. The effluent limitations for each of the product segments within each of the subdivisions includes allowances for both the spent pickle liquor and rinsewaters. These limitations are established as the amount of pollutants allowed per quantity of product (kg/kkg). Separate segments have been established for fume and absorber vent scrubbers, since these scrubbers are not installed at all pickling operations. The effluent limitations for fume and absorber vent scrubber wastewaters are based upon the amount of pollutants allowed to be discharged from each scrubber per day (kg/day). The allowances for the scrubber wastewaters are to be added to the basic allowances for the spent pickle liquor and rinsewaters for pickling operations where these scrubbers are installed.

Pollutants Limited at BPT

The original regulations promulgated in 1976 established BPT effluent limitations for pH, total suspended solids, oil and grease and dissolved iron for each of the subdivisions. In addition, dissolved chromium, dissolved nickel, and fluoride were limited for the combination acid pickling subdivision. The regulations proposed on January 7, 1981 (46 FR 1858), retained the same effluent limitations, except for dissolved chromium and nickel. Limitations were proposed for total chromium and total nickel, and appropriate adjustments were made to the effluent limitations. Additionally, BAT limitations were proposed for chromium, lead, and zinc for sulfuric and hydrochloric acid pickling, and chromium, copper, and nickel for combination acid pickling. However, except for reductions in rinse water flows using cascade rinsing, the model treatment technologies were the same for the BPT and BAT levels of treatment. Different pollutants were limited at BPT and BAT.

The Agency has retained BPT limitations for pH, total suspended solids, and oil and grease for all segments within each subdivision. Additionally, the Agency has promulgated total metal limitations at the BPT level for lead and zinc (for sulfuric and hydrochloric acid pickling), and chromium and nickel (for combination acid pickling). These toxic metal pollutants were selected for limitation, because they serve as indicators for the presence and removal of other toxic metals, as well as other pollutants, particularly iron and fluoride; and to facilitate co-treatment with other compatible wastewaters.

Sampling data indicate that lead and zinc are the predominant toxic metal pollutants in sulfuric and hydrochloric acid pickling wastewaters. Chromium was also found at similar levels in these wastewaters. Chromium and nickel are found at much higher levels and

in much greater quantities than other toxic pollutants in combination acid pickling wastewaters. Based upon these considerations, the Agency selected lead and zinc for sulfuric and hydrochloric acid operations and chromium and nickel for combination acid operations, as the toxic metal pollutants to be limited. Other toxic metals, iron, and fluoride are found in acid pickling wastewaters. However, control of the toxic metals for which limitations have been established will result in comparable control of the other toxic metals, as well as fluoride and iron. The same treatment technology is used to remove all of these pollutants. Limitations for lead, zinc, chromium, and nickel will ensure that the treatment systems are operated efficiently and that other toxic pollutants in the wastewater are comparably controlled.

BPT Flow Rates

Production weighted average applied flow rates were developed for each acid pickling segment for the purpose of establishing the model flow rates, which are, in turn, used for sizing and costing the model treatment systems and for establishing effluent limitations. The Agency believes that the weighted average method of determining the model flow rates results in the most representative flows for this subcategory. The data indicate wide variations in production and flow rates between the pickling lines in each of the segments. The Agency could not identify subsets of pickling lines which would be representative of the best plants in each segment, since no discernable patterns were evident in the data. Thus, the Agency decided to use nearly all of the reported production and flow data to develop the model flow rates. The production weighted method for calculating the average minimizes the bias of the extremes in production and flow rates and results in a representative average model flow for each segment. The model effluent flows used to establish the effluent limitations are summarized in Table IX-2. The spent pickle liquor and rinsewater flow data and corresponding production rates and the respective averages are presented in Tables IX-3 through IX-20, for each subdivision and segment of the acid pickling subcategory.

The model flow data presented in Table IX-2, demonstrate that segmentation by product type is appropriate, and that segmentation by type of operation (batch or continuous) alone as used in the original regulation is inadequate to account for the variations in applied flow rates. Based upon its reanalysis of data in response to comments, the Agency has concluded that were the original segmentation and flow rates retained, the limitations for certain products would be too restrictive, while for others, the limitations would be too lenient.

The flow data presented in Table IX-2 also show that the spent pickle liquor flows amount to a small percentage of the rinsewater flows for most of the segments. Consequently, the spent pickle liquor and rinsewater flows were summed to establish the model flow rates, despite the fact that spent pickle liquor is contract hauled rather than treated at many plants. These model flow rates were used as the

flow basis for the effluent limitations and for establishing model treatment costs, for all plants, including those that have contract hauling of spent pickle liquor.

The Agency analyzed the applied flows to fume and absorber vent scrubbers and determined that these flows are unrelated to production rates or product type. In addition, no correlation could be found between these flows and the design gas flow through the scrubbers or the type of scrubber used. These scrubbers are also not installed at every pickling operation. For these reasons, the Agency established separate segments in each subdivision for fume and absorber vent scrubbers, and developed limitations on the basis of the amount of pollutants allowed per day per scrubber (kg/day). These limitations apply to the discharge from each scrubber installed at a pickling operation. The model flow rate for the blowdown from fume scrubber recycle systems is 15 gallons per minute and for absorber vent scrubbers, 100 gallons per minute. As noted in Table IX-19, 100% recycle (zero discharge) is reported for several plants.

Wastewater Quality

The Agency sampled numerous plants (see Section VII) to obtain effluent data for treatment systems comparable to the model BPT treatment system. In addition, long term effluent data was acquired from the industry through D-DCPs and other questionnaires. Effluent data was also obtained from NPDES permit files. These effluent data are representative of discharges from well operated treatment systems within this subcategory. Different data sets were used to establish the concentration basis for those operations pickling carbon steel (sulfuric and hydrochloric acid subdivisions) and those pickling primarily specialty steels (combination acid pickling), since the levels and predominant type of toxic metal pollutants contained in these wastewaters are different. All of these data were analyzed. The statistical methodology and the results of the analysis are presented in Appendix A of Volume I. The effluent concentration basis for the BPT effluent limitations is shown in Table IX-1.

Justification of BPT

The data presented in Table IX-21 clearly demonstrate the achievability of the BPT effluent limitations for the sulfuric acid subdivision. In this table, the BPT effluent limitations are compared with effluent data from full-scale plants operating in the industry for which the Agency had data. These plants have treatment facilities which are comparable to the BPT model treatment system, and are representative of the discharge from other operations within the subdivision. Similar data are presented in Tables IX-22 and IX-23 for the hydrochloric and combination acid subdivisions, respectively. For certain segments in each subdivision, no data are presented, since the Agency did not sample operations within those segments. Since those operations have wastewaters with the same characteristics as discharges from other operations within the respective subdivision, the Agency is confident that the effluent limitations are achievable

for these operations as well. The discharge flow rate for each segment is well demonstrated. The effluent concentration basis is well demonstrated for each of the subdivisions. Since the pollutant characteristics and treatability of the wastewaters are the same for each segment within each subdivision, the same effluent concentrations are achievable.

The Agency considered two central treatment systems treating salt bath descaling and combination acid pickling wastewaters, which are compatible streams from specialty steel operations. The Agency compared the combined BPT effluent limitations for scale removal and combination acid pickling operations to actual plant performance data. Data from these plants demonstrate that the BPT effluent limitations are achievable with the model treatment technologies described previously. Refer to Tables IX-24 and IX-25 for this demonstration.

The Agency compared the performance of one central treatment plant treating wastewaters from carbon steel operations with the aggregate BPT limitations. The wastewaters from acid pickling, alkaline cleaning, cold rolling, hot coating and electroplating are co-treated at this plant. The aggregate BPT limitations include allowances for each of the operations covered in the steel industry category. No allowances have been included for the electroplating wastewaters. Despite this omission the data presented in Table IX-26 clearly show that the effluent limitations are being met, and demonstrate the achievability of the limitations. The Agency also has effluent data for central treatment plants installed at Plants 0856D, 0860B and 0948C. These data show that these plants are also achieving low concentrations. However, a large portion of the wastewaters treated at these plants are from electroplating operations. The Agency believes that if appropriate allowances for the electroplating wastewaters are included in the aggregate effluent limitations for these plants, the discharges from these plants would meet the aggregate limitations. Guidance to permit writers for developing allowances for wastewater sources not included in the steel industry category are presented in Volume I.

TABLE IX-1

BPT EFFLUENT LIMITATIONS
ACID PICKLING SUBCATEGORY

Subdivision	Discharge Flow(gal/ton)	TSS	Oil & Grease[1]	Chromium	Lead	Nickel	Zinc	pH
Concentration Basis (mg/l)	-	30	10	0.4	0.15	0.3	0.1	-
Sulfuric Acid								
Strip/Sheet/Plate	180	0.0225	0.00751	-	0.000113	-	0.0000751	6.0-9.0
Rod/Wire/Coil	280	0.0350	0.0117	-	0.000175	-	0.000117	6.0-9.0
Bar/Billet/Bloom	90	0.0113	0.00375	-	0.0000563	-	0.0000375	6.0-9.0
Pipe/Tube/Other	500	0.0626	0.0209	-	0.000313	-	0.000209	6.0-9.0
Fume Scrubber[2]	15 gpm	2.46	0.819	-	0.0123	-	0.00819	6.0-9.0
Hydrochloric Acid								
Strip/Sheet/Plate	280	0.0350	0.0117	-	0.000175	-	0.000117	6.0-9.0
Rod/Wire/Coil	490	0.0613	0.0204	-	0.000307	-	0.000204	6.0-9.0
Pipe/Tube	1020	0.128	0.0425	-	0.000638	-	0.000425	6.0-9.0
Absorber Vent Scrubber[3]	100 gpm	16.4	5.46	-	0.0819	-	0.0546	6.0-9.0
Fume Scrubber[2]	15 gpm	2.46	0.819	-	0.0123	-	0.00819	6.0-9.0
Combination Acid								
Batch-Strip/Sheet/Plate	460	0.0576	0.0192	0.000767	-	0.000576	-	6.0-9.0
Cont.-Strip/Sheet/Plate	1500	0.188	0.0626	0.00250	-	0.00188	-	6.0-9.0
Rod/Wire/Coil	510	0.0638	0.0213	0.000851	-	0.000638	-	6.0-9.0
Bar/Billet/Bloom	230	0.0288	0.00959	0.000384	-	0.000288	-	6.0-9.0
Pipe/Tube	770	0.0963	0.0321	0.000128	-	0.000963	-	6.0-9.0
Fume Scrubber[2]	15 gpm	2.46	0.819	0.0328	-	0.0246	-	6.0-9.0

Notes:

(1) Oil and grease is limited only when pickling wastewater is treated in combination with cold rolling wastewater.
(2) The fume scrubber limitation which is given in kg/day is in addition to the kg/kkg limitation shown for other acid pickling segments.
(3) The absorber vent scrubber limitation which is given in kg/day is in addition to the kg/kkg limitation for other pickling segments and the kg/day fume scrubber limitation for the hydrochloric acid subdivision.

TABLE IX-2

DEVELOPMENT OF APPLIED FLOWS
ACID PICKLING SUBCATEGORY

	Applied Flow Rate (GPT)
Sulfuric Acid	
Concentrate - All Sulfuric	20
Rinse - Strip/Sheet/Plate	160
Rinse - Rod/Wire/Coil	260
Rinse - Bar/Billet/Bloom	70
Rinse - Pipe/Tube/Other	480
Hydrochloric Acid	
Concentrate - All Hydrochloric	10
Rinse - Strip/Sheet/Plate	270
Rinse - Rod/Wire/Coil	480
Rinse - Pipe/Tube	1,010
Absorber Vent Scrubber (GPM)	100
Combination Acid	
Concentrate - All Combination	20
Rinse - Batch Strip/Sheet/Plate	440
Rinse - Continuous Strip/Sheet/Plate	1,480
Rinse - Rod/Wire/Coil	490
Rinse - Bar/Billet/Bloom	210
Rinse - Pipe/Tube	750
All Acid Pickling	
Fume Scrubber (GPM)	135

TABLE IX-3

DEVELOPMENT OF CONCENTRATE FLOW RATE
SULFURIC ACID PICKLING

Plant	Capacity (TPD)	Conc Flow (GPD)	Plant	Capacity (TPD)	Conc Flow (GPD)
0020B	801	5,126	0256G	471	8,478
0048C	180	3,600	0264	161	2,753
0060C	63	504	0264C	153	1,805
0060M	816	898	0264D	284	3,862
0068	93.6	6,552	0384A-1	261	365
0088A-1	744	6,026	0384A-2	240	600
0088A-2	244	5,514	0384A-3	84	4,318
0088A-3	519	7,577	0396E-1	900	28,800
0088A-4	246	4,010	0396E-2	179	7,912
0088A-5	87	3,663	0432A-1	2,088	1,668
0088D-1	717	10,181	0432A-2	254	6,604
0112-1	507	11,458	0432A-3	801	20,105
0112-2	53.1	1,800	0432A-4	750	14,400
0112A-2	792	3,564	0432B	1,686	28,662
0112A-3	1,692	28,764	0432E	30	100
0112A-4	2,496	35,942	0432L	323	4,134
0112A-5	1,197	21,546	0432M	307	2,395
0112A-6	1,875	54,750	0460A-1	699	18,034
0112A-7	1,875	15,750	0460A-2	138	6,596
0112A-8	1,032	28,793	0460A-3	444	11,988
0112A-9	840	25,620	0460C	105	1,312
0112A-10	180	6,246	0460D	239	6,907
0112A-11	864	10,109	0460E	180	2,394
0112A-12	180	6,246	0460F	28	913
0112A-13	180	6,246	0460G	225	5,108
0112C-1	261	5,768	0460H	94	2,604
0112C-2	1,611	14,338	0492A-1	186	6,008
0112C-3	942	9,326	0492A-2	288	4,493
0112F-1	588	1,529	0528A-1	783	37,897
0112I-1	4.2	44.1	0528A-2	2,577	37,882
0112I-2	144	2,952	0548-1	22.8	203
0112I-3	73	1,080	0548-2	204	1,836
0112I-4	44	1,139.6	0548-3	186	1,674
0112I-5	138	4,650.6	0548-4	51	464
0112I-6	16.4	1,804	0548B	44.4	1,199
0240B	687	7,214	0580C	45	468
0240C	102	388	0584C	462	4,481
0256A	414	4,016	0584E	4,458	70,436
0256B	423	6,345	0612	853	2,986
0256C-1	1,469	16,159	0640-1	738	20,369
0256C-2	1,469	16,159	0640-2	20	152
0256F	75	300	0684C	1,014	21,598

TABLE IX-3
DEVELOPMENT OF CONCENTRATE FLOW RATE
SULFURIC ACID PICKLING
PAGE 2

Plant	Capacity (TPD)	Conc Flow (GPD)
0684D-2	348	3,097
0684D-3	930	8,277
0684E-1	459	8,032
0684E-3	528	9,240
0684E-4	525	9,188
0684G-1	663	2,320
0684G-2	483	5,748
0684H-1	316	7,995
0684Q	372	9,151
0684V	150	315
0728	75	585
0792C	486	18,954
0856D-1	1,626	25,853
0856D-2	1,506	17,319
0856D-3	2,226	28,938
0856D-4	3,516	35,863
0856E	285	6,099
0856F-1	2,559	46,062
0856F-2	222	910
0856F-3	156	1,201
0856N-1	300	6,000
0856N-2	276	5,989
0856N-3	270	2,997
0856P-1	771	21,202
0856P-2	828	11,178
0856S	222	613
0856T	258	1,445
0856U-1	186	4,408
0856U-2	339	4,305
0860F	1,083	17,978
0860G	735	16,464
0864B-1	651	5,989
0868A-1	573	2,865
0868A-2	444	17,982
0868A-3	450	16,560
0868A-4	543	24,761
0868A-5	2,088	49,903
0884D	18	301
0916A-1	600	9,000
0916A-2	12	216
0920D	267	8,998
0946A-1	162	1,685
0946A-2	219	4,117
0946A-3	173	865
0948A	189	9,242
0948C-1	699	14,959
0948C-2	699	14,959
0948C-3	1,761	23,950
0948C-4	2,685	30,072
	89,459*	1,487,206*

$$\frac{\Sigma GPD}{\Sigma TPD} = \frac{1,487,206}{89,459} = 16.6 \text{ GPT}$$

* Sums include data for confidential plants.

TABLE IX-4

DEVELOPMENT OF CONCENTRATE FLOW RATE
HYDROCHLORIC ACID PICKLING

Plant	Capacity (TPD)	Conc Flow (GPD)	Plant	Capacity (TPD)	Conc Flow (GPD)
0060L	0.4	1.5	0584A-2	2,409	11,563
0068	104	562	0584A-3	2,826	11,587
0068-2	88.8	710	0584A-4	2,223	11,560
0112H	40.2	840	0584C-1	3,066	14,410
0320-1	2,023	13,352	0612-1	69.8	251
0320-2	1,558	7,946	0612-2	69.8	251
0320-3	1,822	11,843	0612-3	69.8	251
0320-4	2,990	18,239	0612-4	69.8	251
0384A-1	849	11,546	0612-5	16.2	58.3
0384A-2	1,740	14,442	0684B-1	1,326	11,536
0384A-3	1,119	8,616	0684B-2	1,407	17,306
0384A-4	3,066	42,311	0684F-1	1,740	12,702
0384A-6	768	3,379	0684F-2	3,084	25,289
0432C-1	2,193	34,649	0684F-3	1,146	3,094
0432C-2	2,259	34,563	0684I	1,377	18,727
0432D	3,678	31,263	0724A-4	1,719	12,549
0448A-1	2,040	12,444	0856F	2,388	22,925
0448A-2	768	6,682	0856P-1	16.9	100
0580-1	3	30	0856S-1	19	15.2
0580-2	60	108	0856S-2	5.4	13
0580-3	15	45	0860B-1	1,815	2,904
0580-4	30	45	0860B-2	1,815	2,904
0580-5	4.5	150	0860B-3	2,955	14,480
0580-6	12	45.6	0860B-4	3,411	17,396
0580A-1	1.5	8.8	0860F-1	69	483
0580A-2	2.2	258.5	0860F-2	37.5	480
0580A-3	3.7	140.6	0860F-3	37.5	480
0580B-1	15	45	0864B-1	59.1	148
0580B-2	30	45	0864B-2	28.2	150
0580B-3	60	108	0864B-3	1,440	17,280
0580C-3	15	66	0864B-4	1,965	17,292
0580D-1	60	108	0868A-1	1,590	40,386
0580D-2	15	45	0920A-1	1,761	32,931
0580D-3	30	45	0920A-2	1,638	31,613
0580E-1	60	108	0920C-1	2,446	18,100
0580E-2	30	45	0920G-1	2,133	14,931
0580F-1	29	52	0948A-1	1,428	5,284
0580F-2	16.7	25	0948A-2	1,209	5,320
0584A-1	2,490	11,454			
				81,020*	664,192*

$$\frac{\varepsilon GPD}{\varepsilon TPD} = \frac{664,192}{81,020} = 8.2 \text{ GPT}$$

* Sums include data for confidential plants.

TABLE IX-5

DEVELOPMENT OF CONCENTRATE FLOW RATE
COMBINATION ACID PICKLING

Plant	Capacity (TPD)	Conc Flow (GPD)
0020B-1	324	5,022
0020B-2	210	5,187
0020B-3	99	5,158
0020L-1	186	1,451
0020L-2	200	1,440
0060	308	7,207
0060E-1	426	3,493
0060E-2	99.9	250
0060N	9.6	450
0060P	25.5	209
0068	381	10,516
0088A	72	295
0088C-1	273	1,799
0088C-2	273	1,799
0112A-1	1,044	4,072
0112A-2	96	1,805
0112C	882	14,377
0112H	552	3,599
0176C	22.8	942
0176D	9	315
0248A-2	161	274
0248B-1	265	3,551
0248B-2	93.9	3,775
0248B-3	228	3,169
0248B-4	169	2,265
0248B-5	246	2,608
0248B-6	154	3,249
0248B-7	78.3	1,292
0248B-8	98.4	1,289
0248B-9	322	2,608
0248B-10	223	2,609
0248C-1	141	338
0248C-2	6.6	137
0248C-3	112	302
0248D-1	2.7	237
0248D-2	2.7	237
0248D-3	7.8	237
0248D-4	8.7	1,296
0248D-5	13.5	1,606
0248E	5.2	15.2
0248F	0.8	915
0256F	30	285
0256O-1	166	1,909
0256O-2	122	1,867
0256O-3	172	1,290
0256O-4	113	1,921
0284A	177	531
0424-1	186	2,009
0424-2	24.9	1,138
0430C	60	4,320
0432E	15	33
0432L	33.6	605
0440A-1	162	1,118
0440A-2	75	825
0476A-1	386	12,005
0496	411	3,699
0548A	63	40
0548B	1.8	29
0580	45	45
0580G	161	201
0640B	171	5,694
0648	129	1,935
0684D-1	66	1,465
0684D-3	81	1,895
0684D-5	72	1,793
0684D-6	135	2,268
0684D-7	195	2,184
0684D-8	42	773
0684D-9	60	1,542
0684D-10	69	524
0684D-11	81	1,814
0684D-12	105	1,974
0684D-13	177	2,266
0684P-1	37.8	454
0684P-2	20.4	286
0684P-3	37.2	4,204
0684V	194	970
0776	25.5	31

TABLE IX-5
DEVELOPMENT OF CONCENTRATE FLOW RATE
COMBINATION ACID PICKLING
PAGE 2

Plant	Capacity (TPD)	Conc Flow (GPD)	Plant	Capacity (TPD)	Conc Flow (GPD)
0776G	5	94	0856H	125	1,675
0776H	12.9	551	0860B-1	390	5,772
0792A	54	216	0884E	24	151
0856E	78	9,594	0884F	4.5	0.45
				12,787*	187,219*

$$\frac{\varepsilon GPD}{\varepsilon TPD} = \frac{187,219}{12,787} = 14.6 \text{ GPT}$$

* Sums include data for confidential plants.

TABLE IX-6

DEVELOPMENT OF APPLIED RINSE FLOW RATE
SULFURIC ACID PICKLING
STRIP/SHEET/PLATE

Plant	Capacity (TPD)	Rinse Flow (GPD)
0068	93.6	71,978
0112A-3	1,692	252,108
0112A-4	2,496	339,456
0112A-5	1,197	171,171
0112A-7	1,875	268,125
0112A-8	1,032	348,816
0112A-10	180	14,400
0112A-11	864	146,880
0112A-12	180	14,400
0112A-13	180	14,400
0176-2	10.2	8,639
0256A	414	86,526
0256B	423	179,775
0256C-1	1,469	43,189
0256C-2	1,469	43,189
0384A-3	84	345,576
0432L	323	19,445
0432M	307	143,983
0476A-3	127	35,941
0528A-1	783	50,425
0528A-2	2,577	50,509
0580C	45	53,280
0584C	462	28,783
0684C	1,014	287,976
0684V	150	24,600
0760	483	5,603
0792C	486	62,208
0856D-2	1,506	215,960
0856D-3	2,226	287,154
0856E	285	216,030
0856F-1	2,559	138,186
0856P-1	771	1,503
0856U-1	186	11,532
0856U-2	339	158,313
0864B-2	846	143,820
0864B-3	561	144,177
0864B-4	759	144,210
0868A-2	444	71,928

TABLE IX-6
DEVELOPMENT OF APPLIED RINSE FLOW RATE
SULFURIC ACID PICKLING
STRIP/SHEET/PLATE
PAGE 2

Plant	Capacity (TPD)	Rinse Flow (GPD)
0868A-3	450	43,200
0868A-4	543	72,219
0948C-1	699	294,978
0948C-2	699	294,978
	33,784*	5,389,721*

$$\frac{\varepsilon GPD}{\varepsilon TPD} = \frac{5,389,721}{33,784} = 159.5 \text{ GPT}$$

* Sums include data for confidential plants.

TABLE IX-7

DEVELOPMENT OF APPLIED RINSE FLOW RATE
SULFURIC ACID PICKLING
ROD/WIRE/COIL

Plant	Capacity (TPD)	Rinse Flow (GPD)
0048C	180	10,494
0048F	117	4,329
0060M	816	11,995
0176-1	60	43,440
0264	161	61,502
0264C	153	90,117
0384A-2	240	43,200
0460C	105	44,835
0460D	239	43,498
0460E	180	50,940
0460F	28	7,308
0460G	225	51,075
0460H	94	50,290
0476A-1	70	28,980
0580-1	0.9	3,600
0612	853	155,246
0640-2	20	165,760
0684H-2	320	143,680
0856F-3	156	53,976
0856S	222	29,748
0864B-1	651	259,098
0868A-1	573	199,977
0946A-2	219	1,883
O-2	120	960
Q-2	200	1,600
	6,129*	1,571,895*

$$\frac{\varepsilon GPD}{\varepsilon TPD} = \frac{1,571,895}{6,129} = 256.5 \text{ GPT}$$

* Sums include data for confidential plants.

TABLE IX-8

DEVELOPMENT OF APPLIED RINSE FLOW RATE
SULFURIC ACID PICKLING
BAR/BILLET/BLOOM

Plant	Capacity (TPD)	Rinse Flow (GPD)
0088A-1	744	744
0088D-1	717	1,506
0112-1	507	558
0112-2	53.1	12,266
0112F-1	588	1,529
0240B	687	43,212
0684D-2	348	2,888
0684D-3	930	11,346
0684E-1	459	7,206
0684E-4	525	21,525
0684G-1	663	36,001
0684G-2	483	35,984
0684Q	372	71,982
0856N-1	300	129,600
0856N-3	270	43,200
0856T	258	14,396
0946A-1	162	1,037
0946A-3	173	606
P-2	142	2,400
	9,792*	610,898*

$$\frac{\varepsilon GPD}{\varepsilon TPD} = \frac{610,898}{9,792} = 62.4 \text{ GPT}$$

* Sums include data for confidential plants.

TABLE IX-9

DEVELOPMENT OF APPLIED RINSE FLOW RATE
SULFURIC ACID PICKLING
PIPE/TUBE/OTHER

Plant	Capacity (TPD)	Rinse Flow (GPD)
0088A-2	244	12,005
0088A-3	519	223,170
0088A-4	246	28,782
0088A-5	87	12,006
0088D-2	52	144,300
0112I-1	4.2	28,560
0112I-2	144	86,688
0112I-3	73	126,144
0112I-5	138	83,352
0256F	75	72,000
0256G	471	50,397
0432E	30	36,000
0476A-2	180	16,380
0548-1	22.8	19,448
0548-2	204	196,044
0548-3	186	156,054
0548-4	51	43,197
0548B	44.4	28,816
0728	75	21,600
0856N-2	276	57,684
0856Q	15	7,200
0884C	18	7,200
0884D	18	21,600
0884G	7.8	601
0916A-2	12	720
0948A	189	68,580
	3,923*	1,875,991*

$$\frac{\varepsilon GPD}{\varepsilon TPD} = \frac{1,875,991}{3,923} = 478.2 \text{ GPT}$$

* Sums include data for confidential plants.

TABLE IX-10

DEVELOPMENT OF APPLIED RINSE FLOW RATE
HYDROCHLORIC ACID PICKLING
STRIP/SHEET/PLATE

Plant	Capacity (TPD)	Rinse Flow (GPD)
0020C	582	557,556
0060-1	3,900	577,200
0060-2	4,206	576,222
0060D	207	72,036
0384A-1	849	647,787
0384A-2	1,740	647,280
0384A-3	1,119	503,550
0384A-6	768	360,192
0432C-1	2,193	539,478
0432C-2	2,259	539,901
0528B	1,813	50,401
0580C	3	4,320
0584A-1	2,490	540,330
0584A-2	2,409	539,616
0584A-3	2,826	539,766
0584A-4	2,223	540,189
0584C	3,066	689,850
0684B-1	1,326	144,534
0684B-2	1,407	143,514
0684F-3	1,146	191,955
0684I	1,377	374,544
0724A-1	360	1,497,600
0724A-2	336	403,200
0724A-3	738	1,008,108
0724A-4	1,719	144,396
0856F	2,388	109,848
0860B-1	1,815	764,115
0860B-2	1,815	863,940
0864B-3	1,440	21,600
0864B-4	1,965	359,595
0868A	1,590	475,410
0920A-1	1,761	431,445
0920A-2	1,638	432,432
0920C	2,446	518,552
0920G	2,133	479,925
	60,053	16,290,387

$$\frac{\varepsilon GPD}{\varepsilon TPD} = \frac{16,290,387}{60,053} = 271.3 \text{ GPT}$$

TABLE IX-11

DEVELOPMENT OF APPLIED RINSE FLOW RATE
HYDROCHLORIC ACID PICKLING
ROD/WIRE/COIL

Plant	Capacity (TPD)	Rinse Flow (GPD)
0068-1	104	144,040
0068-2	88.8	32,590
0176	15.9	28,795
0580-1	3	4,500
0580-5	4.5	5,998
0580A-1	1.5	9,360
0580A-2	2.2	20,533
0580A-3	3.7	7,215
0580C-2	21	63,357
0580C-3	15	17,280
0612-1	69.8	4,607
0612-2	69.8	4,607
0612-3	69.8	4,607
0612-4	69.8	4,607
0612-5	16.2	1,069
0856S-1	19	11,191
0856S-2	5.4	7,069
0864B-1	59.1	28,782
0864B-2	28.2	21,601
U-2	31	2,880
V-2	237	18,723
	934.7	443,411

$$\frac{\varepsilon GPD}{\varepsilon TPD} = \frac{443,411}{934.7} = 474.4 \text{ GPT}$$

TABLE IX-12

DEVELOPMENT OF APPLIED RINSE FLOW RATE
HYDROCHLORIC ACID PICKLING
PIPE/TUBE

Plant	Capacity (TPD)	Rinse Flow (GPD)
0060L	0.4	5,092
0864B-5	273	288,015
	319.3*	322,621*

$$\frac{\varepsilon GPD}{\varepsilon TPD} = \frac{322,621}{319.3} = 1,010.4 \text{ GPT}$$

* Sums include data for confidential plants.

TABLE IX-13

DEVELOPMENT OF APPLIED RINSE FLOW RATE
COMBINATION ACID PICKLING
BATCH STRIP/SHEET/PLATE

Plant	Capacity (TPD)	Rinse Flow (GPD)
0176-7	203	144,333
0284A	177	57,525
0424-1	186	17,298
0430C	60	17,280
0684V	194	79,346
0776H	12.9	42,609
0856E	78	71,916
0856H	125	42,250
	1,119.9*	486,921*

$$\frac{\varepsilon GPD}{\varepsilon TPD} = \frac{486,921}{1,119.9} = 434.8 \text{ GPT}$$

* Sums include data for confidential plants.

TABLE IX-14

DEVELOPMENT OF APPLIED RINSE FLOW RATE
COMBINATION ACID PICKLING
CONTINUOUS STRIP/SHEET/PLATE

Plant	Capacity (TPD)	Rinse Flow (GPD)
0020B-1	324	431,892
0020B-2	210	216,090
0020C-6	88.6	201,211
0020L-1	186	202,182
0020L-2	200	202,200
0176-3	90.3	50,387
0176-4	19.8	43,204
0176-5	18	36,000
0248A-2	161	57,638
0248B-1	265	324,360
0248B-2	93.9	338,416
0248B-3	228	281,124
0248B-4	169	215,813
0248B-5	246	237,390
0248B-6	154	281,512
0248B-7	78.3	122,383
0284B-8	98.4	122,410
0284B-9	322	237,636
0248B-10	223	237,718
02560-3	172	183,008
0432L	33.6	187,186
0648	129	270,513
0684D-1	66	151,206
0684D-2	81	151,227
0684D-3	81	165,564
0684D-4	39	165,594
0684D-5	72	151,200
0684D-6	135	187,245
0684D-7	195	244,725
0684D-8	42	187,194
0684D-9	60	187,200
0684D-10	69	187,197
0684D-11	81	179,982
0684D-12	105	179,970
0684D-13	177	244,791
0900	182	343,616
	4,895	7,206,984

$$\frac{\varepsilon GPD}{\varepsilon TPD} = \frac{7,206,984}{4,895} = 1,472.3 \text{ GPT}$$

TABLE IX-15

DEVELOPMENT OF APPLIED RINSE FLOW RATE
COMBINATION ACID PICKLING
ROD/WIRE/COIL

Plant	Capacity (TPD)	Rinse Flow (GPD)
0060I	177	108,147
0068	381	61,722
0112H	552	64,032
0176-1	262	165,846
0176-2	172	179,396
0176-6	89.4	71,967
0248C-1	141	143,115
0248C-2	6.6	58,667
0440A-2	75	28,800
0580	45	30,015
0580G	161	23,023
0640B	171	172,881
0776F	25.5	4,310
0776G	5	5,250
0776J	8.1	2,916
0792A	54	9,720
	2,325.6	1,129,807

$$\frac{\varepsilon GPD}{\varepsilon TPD} = \frac{1,129,807}{2,325.6} = 485.8 \text{ GPT}$$

TABLE IX-16

DEVELOPMENT OF APPLIED RINSE FLOW RATE
COMBINATION ACID PICKLING
BAR/BILLET/BLOOM

Plant	Capacity (TPD)	Rinse Flow (GPD)
0256F-2	0.25	80
0256N-2	0.25	80
0424-2	24.9	11,529
0440A	162	28,836
0684P-2	20.4	2,734
	207.8	43,259

$$\frac{\varepsilon GPD}{\varepsilon TPD} = \frac{43,259}{207.8} = 208.2 \text{ GPT}$$

TABLE IX-17

DEVELOPMENT OF APPLIED RINSE FLOW RATE
COMBINATION ACID PICKLING
PIPE/TUBE

Plant	Capacity (TPD)	Rinse Flow (GPD)
0060N	9.6	1,046
0088A	72	22,320
0088D	51.9	61,034
0176C	22.8	36,868
0176D	9	28,800
0248D-1	2.7	7,201
0248D-2	2.7	7,201
0248D-3	7.8	7,199
0248D-4	8.7	3,602
0248D-5	13.5	3,604
0248E	5.2	3,619
0248F	0.8	1,980
0256F	30	28,800
0432E	15	47,520
0548B	1.8	6,968
0884E	24	15,600
0884F	4.5	0.45
0948F	81.9	14,414
U	11.5	7,786
	450.1*	334,396*

$$\frac{\varepsilon GPD}{\varepsilon TPD} = \frac{334,396}{450.1} = 742.9 \text{ GPT}$$

* Sums include data for confidential plants.

TABLE IX-18

DEVELOPMENT OF APPLIED FUME SCRUBBER FLOW RATE
ACID PICKLING

Plant	Acid Type	Applied Flow (GPM)
0020B-1	Combination	75
0020B-1	Sulfuric	50
0020B-2	Combination	75
0020C-1	Combination	3
0020C-1	Hydrochloric	3
0020C-2	Combination	90
0020C-3	Combination	90
0020C-4	Combination	23
0020C-5	Combination	23
0020C-6	Combination	6
0020C-7	Combination	200
0020L-1	Combination	35
0020L-2	Combination	35
0060-1	Hydrochloric	235
0060-2	Hydrochloric	235
0060B-1	Hydrochloric	200
0060B-2	Hydrochloric	480
0060B-3	Hydrochloric	140
0060D-1	Combination	250
0060D-1	Hydrochloric	100
0060D-2	Combination	250
0060D-3	Combination	20
0060D-5	Combination	10.5
0060D-6	Combination	100
0060E-1	Combination	230
0060E-2	Combination	96
0112A-2	Combination	50
0112A-4	Sulfuric	40
0112A-8	Sulfuric	12
0112A-9	Sulfuric	12
0112A-11	Sulfuric	10
0112B-1	Hydrochloric	200
0112B-2	Hydrochloric	200
0112B-3	Hydrochloric	200
0112D-1	Hydrochloric	300
0112D-1	Sulfuric	13
0112D-2	Hydrochloric	300
0112H-1	Hydrochloric	10
0176-1	Combination	645
0176-2	Combination	600
0176-2	Sulfuric	5
0176-3	Combination	200
0176-4	Combination	17.5
0176-5	Combination	175
0176-6	Combination	400
0176-7	Combination	800
0176D-1	Combination	6
0240C-1	Sulfuric	75
0248B-1	Combination	69
0248B-2	Combination	111
0248B-3	Combination	111
0248B-4	Combination	90
0248B-5	Combination	69
0248B-6	Combination	250
0248B-9	Combination	69
0248B-10	Combination	69
0256A-1	Sulfuric	24
0256B-1	Sulfuric	125
0256F-1	Combination	150
02560-1	Combination	80
02560-2	Combination	80
02560-3	Combination	32
02560-4	Combination	120
0284A-1	Combination	20
0284A-2	Combination	20
0248A-3	Combination	10
0320-1	Hydrochloric	300
0320-2	Hydrochloric	300
0320-3	Hydrochloric	300
0320-4	Hydrochloric	300
0384A-1	Hydrochloric	360
0384A-2	Hydrochloric	360
0384A-2	Sulfuric	200
0384A-3	Hydrochloric	450
0384A-6	Hydrochloric	90
0430C-1	Combination	50
0432C-1	Hydrochloric	75
0432C-2	Hydrochloric	75
0432D-1	Hydrochloric	200
0432E-1	Combination	9
0432K-2	Combination	15
0432K-3	Combination	15
0432K-4	Combination	15
0432L-1	Sulfuric	25
0432M-1	Sulfuric	50
0460H-1	Sulfuric	20

TABLE IX-18
DEVELOPMENT OF APPLIED FUME SCRUBBER FLOW RATE
ACID PICKLING
PAGE 2

Plant	Acid Type	Applied Flow (GPM)
0476A-3	Sulfuric	20
0496-1	Combination	200
0528A-1	Sulfuric	50
0528A-2	Sulfuric	50
0548-2	Sulfuric	120
0580-2	Hydrochloric	5
0580-3	Hydrochloric	3
0580-6	Hydrochloric	3
0580B-1	Hydrochloric	3
0580B-3	Hydrochloric	5
0580D-1	Hydrochloric	5
0580D-2	Hydrochloric	3
0580D-3	Hydrochloric	3
0580F-1	Hydrochloric	5
0580F-2	Hydrochloric	3
0584A-1	Hydrochloric	250
0584A-2	Hydrochloric	250
0584A-3	Hydrochloric	250
0584A-4	Hydrochloric	250
0584F-1	Hydrochloric	15
0584F-2	Hydrochloric	500
0584F-3	Hydrochloric	20
0684B-1	Hydrochloric	200
0684B-2	Hydrochloric	100
0684C-1	Sulfuric	100
0684F-1	Hydrochloric	200
0684F-2	Hydrochloric	200
0684I-1	Hydrochloric	140
0724A-1	Hydrochloric	75
0724A-2	Hydrochloric	20
0724A-3	Hydrochloric	45
0724A-4	Hydrochloric	20
0760-1	Sulfuric	100
0792C-1	Sulfuric	80
0796B-1	Sulfuric	30
0856D-1	Sulfuric	50
0856D-2	Sulfuric	75
0856D-3	Sulfuric	75
0856D-4	Sulfuric	50
0856E-1	Sulfuric	50
0856F-1	Hydrochloric	110
0856F-1	Sulfuric	220
0856F-2	Sulfuric	1,300
0856F-3	Sulfuric	290
0856H-1	Combination	3.5
0856N-1	Sulfuric	400
0856N-3	Sulfuric	200
0860B-1	Combination	200
0860B-1	Hydrochloric	70
0860B-3	Hydrochloric	75
0860B-4	Hydrochloric	75
0860F-1	Combination	360
0864B-3	Hydrochloric	25
0864B-4	Hydrochloric	25
0864B-5	Hydrochloric	25
0868A-1	Hydrochloric	50
0868A-2	Sulfuric	280
0868A-3	Sulfuric	140
0868A-4	Sulfuric	225
0868A-5	Sulfuric	6
0920A-1	Hydrochloric	20
0920A-2	Hydrochloric	20
0920C-1	Hydrochloric	40
0948A-1	Hydrochloric	225
0948A-2	Hydrochloric	225
0948F-1	Combination	50

Average Applied Scrubber Flow Rate (GPM) = 133.4

TABLE IX-19

DEVELOPMENT OF FUME SCRUBBER RECYCLE
ACID PICKLING

Plant	Acid Type	Discharge Flow (GPM)	Plant	Acid Type	Discharge Flow (GPM)
0060-1	Hydrochloric	35	0256F-1	Combination	0
0060-2	Hydrochloric	35	0256L-1	Combination	0
0060D-1	Combination	10	0384A-2	Sulfuric	26
0060D-2	Combination	10	0496-1	Combination	0.7
0176-1	Combination	60	0584F-3	Hydrochloric	0.8
0176-2	Combination	50	0684F-1	Hydrochloric	4
0176-3	Combination	5	0684F-2	Hydrochloric	4
0176-4	Combination	5	0760-1	Sulfuric	2
0176-5	Combination	5	0796B-1	Sulfuric	0
0176-6	Combination	30	0856F-1	Sulfuric	40
0176-7	Combination	40	0856F-1	Hydrochloric	20
0240C-1	Sulfuric	0	0856F-2	Sulfuric	25
0248B-1	Combination	9	0856F-3	Sulfuric	40
0248B-2	Combination	15	0856N-3	Sulfuric	25
0248B-3	Combination	15	0860F-1	Combination	21
0248B-4	Combination	0	0868A-2	Sulfuric	0
0248B-5	Combination	9	0868A-3	Sulfuric	0
0248B-6	Combination	20	0868A-4	Sulfuric	0
0248B-9	Combination	9	0948A-1	Hydrochloric	10
0248B-10	Combination	9			

Average Discharge Flow = 15.1 GPM

The data presented in this table represent those scrubber systems in the acid pickling subcategory which demonstrate the best recycle systems (70 percent or greater).

TABLE IX-20

DEVELOPMENT OF ABSORBER VENT SCRUBBER APPLIED FLOW RATE
HYDROCHLORIC ACID PICKLING

Plant	AVS Flow (GPM)
0528B	150
0584F-1	100
0584F-2	100
0584F-3	100
0684I-1	100

Average Applied Absorber Vent Scrubber Flow = 110 GPM

TABLE IX-21

JUSTIFICATION OF BPT EFFLUENT LIMITATIONS
SULFURIC ACID PICKLING

Subdivision	Plant	Actual Effluent Loads (kg/kkg of Product) TSS	Oil & Grease[1]	Chromium	Lead	Nickel	Zinc	pH	C&TT
Sulfuric Acid									
Strip/Sheet/Plate									
Effluent Limitation		0.0225	0.00751	-	0.000113	-	0.0000751	6.0-9.0	
	094A	0.00096	0.00041	-	<0.000063	-	0.000020	7.6-7.8	E,SS,T,FLP,NL
	094B	0.0013	0.00083	-	<0.000088	-	0.000055	7.6-7.8	E,SS,T,FLP,NL
	T-2	0	0	-	0	-	0	-	AU
	QQ-2	0.00015	0.00056	-	NA	-	NA	7.5	CR,RR,EB,NL,CL,SL
	SS-2	0.014	0.00021	-	NA	-	NA	7.7	NL,AE,FLP,T,SL,SS
	WW-2	0.0006	0.00007	-	NA	-	NA	8.0	FLP,FLA,NL,CL,SS,SL
Rod/Wire/Coil									
Effluent Limitation		0.0350	0.0117	-	0.000175	-	0.000117	6.0-9.0	
	091	0.00064	0.0037	-	<0.0000005	-	0.000006	8.3-8.5	E,NL,CL,FP
	I-2A	0.0016	0.00042	-	NA	-	NA	6.7	SL
	I-2B	0.0028	0.0045	-	NA	-	NA	6.7	SL
	O-2	0	0	-	0	-	0	-	AU
	Q-2	0	0	-	0	-	0	-	AU
Bar/Billet/Bloom									
Effluent Limitation		0.0113	0.00375	-	0.0000563	-	0.0000375	6.0-9.0	
	No plants in this subdivision were sampled.								
Pipe/Tube/Other									
Effluent Limitation		0.0626	0.0209	-	0.000313	-	0.000209	6.0-9.0	
	090	0.000066	0.0041	-	<0.0000005	-	*	6.6-9.0	E,AE,NL,CL,FLP
	096	<0.0028	0.0026	-	0.00019	-	*	7.3-7.7	AE,NL,CL,F
	S-2	0	0	-	0	-	0	-	RTP

TABLE IX-21
JUSTIFICATION OF BPT EFFLUENT LIMITATIONS
SULFURIC ACID PICKLING
PAGE 2

Notes:

(1) Load permitted only when joint treatment with cold rolling wastewater is practiced.
NA : Not analyzed.
* : Limitation not supported.

C&TT CODE

AE : Aeration
AU : Acid Recovery
CL : Clarifier
CR : Chemical Reduction
E : Equalization
EB : Emulsion Breaking
F : Filtration
FLA : Flocculation w/Alum
FLP: Flocculation w/Polymer
FP : Pressure Filtration
NL : Neutralization w/Lime
RR : Rinse Reduction
RTP: Recycle
SL : Settling Lagoon
SS : Surface Skimming
T : Thickener
VF : Vacuum Filter

TABLE IX-22

JUSTIFICATION OF BPT EFFLUENT LIMITATIONS
HYDROCHLORIC ACID PICKLING

Subdivision	Plant	Actual Effluent Loads (kg/kkg of Product) TSS	Oil & Grease[1]	Chromium	Lead	Nickel	Zinc	pH	C&TT
Hydrochloric Acid									
Strip/Sheet/Plate									
Effluent Limitation		0.0350	0.0117	-	0.000175	-	0.000117	6.0-9.0	
	099	0.00043	0.00012	-	<0.0000005	-	<0.0000005	7.7	NL,SL
	100A	0.016	0.00059	-	<0.00059	-	0.000067	8.0-8.3	CL
	BB-2	0.0018	0.0054	-	NA	-	NA	7.7	AE,FLP,CL,VF,SL,E
Rod/Wire/Coil									
Effluent Limitation		0.0613	0.0204	-	0.000307	-	0.000204	6.0-9.0	
	091	0.012	0.0082	-	*	-	*	8.3-8.5	NL,FDS,VF,CL
	I-2	0.0014	0.00041	-	NA	-	NA	6.7	SL
	U-2	*	0.00194	-	NA	-	NA	8.5	Neut. w/Soda Ash
Pipe/Tube									
Effluent Limitation		0.128	0.0425	-	0.000638	-	0.000425	6.0-9.0	

No plants in this subdivision were sampled.

TABLE IX-22
JUSTIFICATION OF BPT EFFLUENT LIMITATIONS
HYDROCHLORIC ACID PICKLING
PAGE 2

Notes:

(1) Load permitted only when joint treatment with cold rolling wastewater is practiced.
NA: Not analyzed.
* : Limitation not supported.

C&TT CODE

AE : Aeration
CL : Clarifier
E : Equalization
FDS: Filtration-Deep Bed Sand
FLP: Flocculation w/Polymer
NL : Neutralization w/Lime
SL : Settling Lagoon
VF : Vacuum Filter

TABLE IX-23

JUSTIFICATION OF BPT EFFLUENT LIMITATIONS
COMBINATION ACID PICKLING

Subdivision	Plant	Actual Effluent Loads (kg/kkg of Product) TSS	Oil & Grease[1]	Chromium	Lead	Nickel	Zinc	pH	C&TT
Combination Acid									
Batch Strip/Sheet/Plate Effluent Limitation		0.0576	0.0192	0.000767	-	0.000576	-	6.0-9.0	
	C	0.012	0.00011	0.00050	-	*	-	2.7-7.2	E,NL,PSP
Cont. Strip/Sheet/Plate Effluent Limitation		0.188	0.0626	0.00250	-	0.00188	-	6.0-9.0	
	121	0.045	0.022	*	-	*	-	7.8-8.0	E,CL,CR
	O	0.039	0.0090	*	-	*	-	7.3-9.3	E,NL,FLP,CL,T
Rod/Wire/Coil Effluent Limitation		0.0638	0.0213	0.000851	-	0.000638	-	6.0-9.0	
	No plants in this subdivision were sampled.								
Bar/Billet/Bloom Effluent Limitation		0.0288	0.00959	0.000384	-	0.000288	-	6.0-9.0	
	L	*	0.0074	*	-	0.00015	-	7.7-7.9	NW
Pipe/Tube Effluent Limitation		0.0963	0.0321	0.00128	-	0.000963	-	6.0-9.0	
	123	0.0063	0.00067	0.00013	-	0.00078	-	7.5 - 8.3	E,NL,FLP,CL
	U	0.034	0.0028	0.00011	-	0.000028	-	10.4	NL,SL

TABLE IX-23
JUSTIFICATION OF BPT EFFLUENT LIMITATIONS
COMBINATION ACID PICKLING
PAGE 2

Notes:

(1) Load permitted only when joint treatment with cold rolling wastewater is practiced.
NA: Not analyzed.
* : Limitation not supported.

C&TT CODE

CL : Clarifier
CR : Chemical Reduction
E : Equalization
FLP: Flocculation w/Polymer
NL : Neutralization w/Lime
NW : Neutralization w/Other Wastes
PSP: Primary Scale Pit
SL : Settling Lagoon
T : Thickener

TABLE IX-24

JUSTIFICATION OF BPT EFFLUENT LIMITATIONS
COMBINATION ACID PICKLING AND SALT BATH DESCALING
PLANT 0060D

	BPT Limitations						Actual Discharge	
	kg/day allowed for Acid Pickling BPT		kg/day allowed for Salt Bath Descaling BPT		kg/day allowed for Central Treatment System		kg/day actually discharged from Central Treatment System	
Pollutant	30-Day Average	Daily Maximum	30-Day Average	Daily Maximum	30-Day Average	Daily Maximum	30-Day Average(1)	Daily Maximum(2)
TSS	63.69	148.38	13.45	31.40	77.14	179.78	14.7	42.3
Chromium	0.85	2.12	0.18	0.45	1.03	2.57	0.29	0.62
Nickel	0.64	1.91	0.13	0.40	0.77	2.31	0.26	0.64

(1) These values represent the averages of the monthly samples with data from upset conditions removed.
(2) These values represent the maximum of the individual daily samples with data from upset conditions removed.
(3) Cascade rinsing is installed at this plant. When flow rates are adjusted to the model BPT flow rates, the actual discharge remains in compliance with the BPT limitations.

TABLE IX-25

JUSTIFICATION OF BPT EFFLUENT LIMITATIONS
COMBINATION ACID PICKLING AND SALT BATH DESCALING
PLANT 0684D

Pollutant	BPT Limitations[3] kg/day allowed for Acid Pickling BPT 30-Day Average	kg/day allowed for Acid Pickling BPT Daily Maximum	kg/day allowed for Salt Bath Descaling BPT 30-Day Average	kg/day allowed for Salt Bath Descaling BPT Daily Maximum	kg/day allowed for Central Treatment System 30-Day Average	kg/day allowed for Central Treatment System Daily Maximum	Actual Discharge[4] kg/day actually discharged from Central Treatment System 30-Day Average[1]	Actual Discharge[4] kg/day actually discharged from Central Treatment System Daily Maximum[2]
TSS	215.92	503.04	3.03	7.08	218.95	510.12	32.20	83.85
Chromium	2.87	7.19	0.04	0.10	2.91	7.29	1.13	3.78
Nickel	2.16	6.47	0.03	0.09	2.19	6.56	0.78	1.79

(1) These values represent the product of long term averages and 30-Day variability factors.
(2) These values represent 99 percent confidence level values determined by the plant.
(3) BPT limitations do not include allowances for non-regulated process wastewaters.
(4) Actual discharge reflects about 50 percent flow reduction from cascade rinse; actual discharge does not reflect treatment for hexavalent chromium which was installed after above data were obtained.

TABLE IX-26

JUSTIFICATION OF BPT EFFLUENT LIMITATIONS
SULFURIC ACID PICKLING - PLANT 0584E

	kg/day					
	TSS		Chromium		Zinc	
Contributing Subcategory	30-Day Average	Daily Maximum	30-Day Average	Daily Maximum	30-Day Average	Daily Maximum
Sulfuric Acid Pickling	93.5	218.2	-	-	0.38	1.14
Cold Forming	185.0	370.0	-	-	0.62	1.86
Alkaline Cleaning	40.0	93.3	-	-	-	-
Hot Coating Galvanizing	243.5	568.2	-	-	0.37	1.11
BPT Limitations (kg/day)	562.0	1,249.7	-	-	1.37	4.11
Actual Discharge(1) (kg/day)	117.7	246.1	1.48	2.63	1.20	4.35(2)

(1) The actual 30-Day average and daily maximum discharge levels were derived using the statistical methodology presented in Appendix A of Volume 1.
(2) Plant exceeds allowable maximum level less than 1% of the time, based upon the analysis of over 850 data points. However, the BPT limitations do not include allowances for electroplating operations at this plant (see Section IX of Volume I).

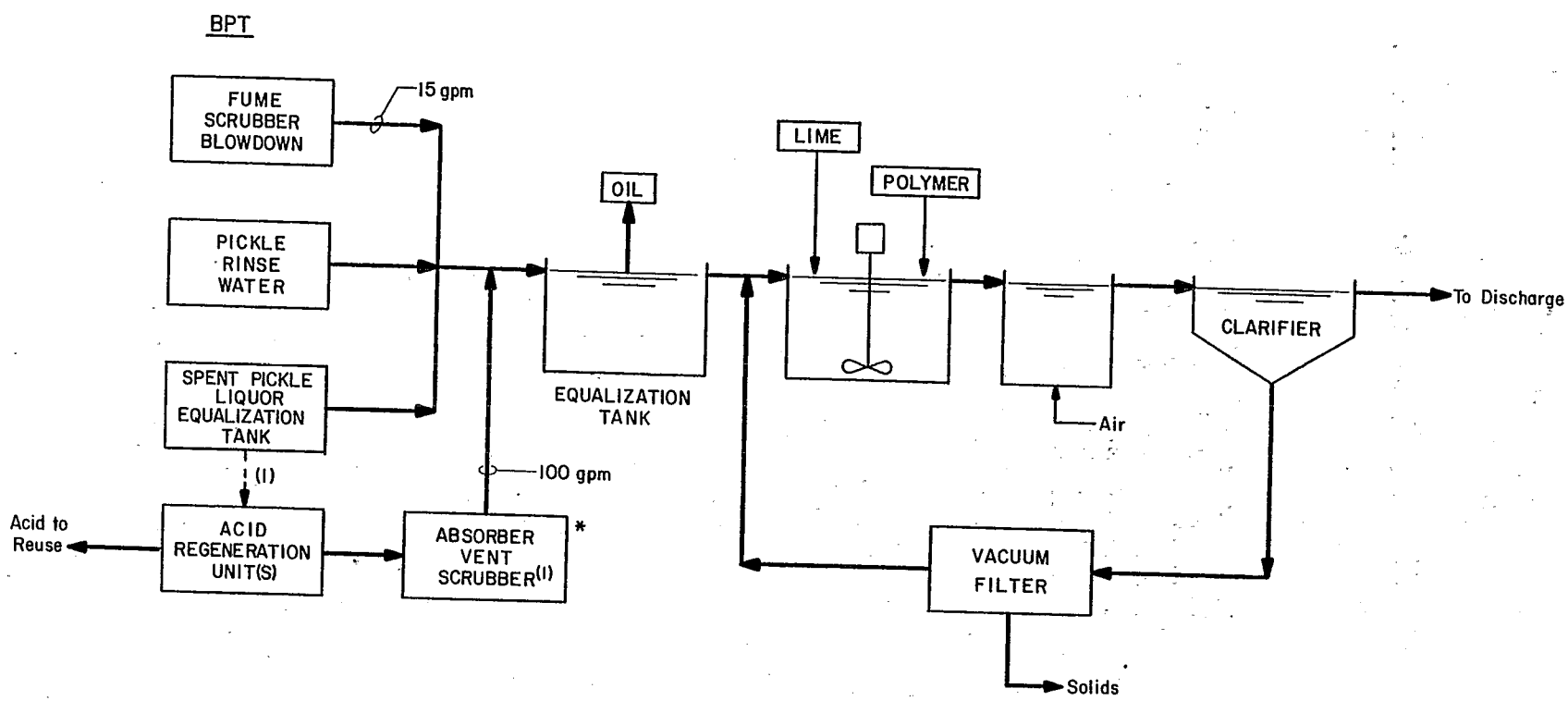

(1) Hydrochloric Acid Regeneration Systems Only

* Replaces Spent Pickle Liquor Allowance for Hydrochloric Acid Regeneration System.

ENVIRONMENTAL PROTECTION AGENCY

STEEL INDUSTRY STUDY
ACID PICKLING
BPT MODEL

Dwn. 12/28/81

FIGURE IX-1

ACID PICKLING SUBCATEGORY

SECTION X

EFFLUENT QUALITY ATTAINABLE THROUGH THE APPLICATION OF THE BEST AVAILABLE TECHNOLOGY ECONOMICALLY ACHIEVABLE

Introduction

The Best Available Technology Economically Achievable (BAT) effluent limitations are to be attained by July 1, 1984. BAT is determined by reviewing available control technologies and practices, and identifying the best economically achievable control and treatment technologies employed within the subcategory. The BAT control methods may be applied within the subcategory being investigated, or transferred from another subcategory or industry.

This section identifies the model BAT flow rates, three alternative BAT model treatment systems, and the resulting effluent levels achievable through the application of these model BAT treatment systems. In addition, the rationale for the Agency's selection of the alternative treatment systems, applied and discharge flow rates, and effluent pollutant concentrations are presented.

Identification of BAT

Based upon information contained in Sections III through VIII of this report, the Agency developed the three alternative treatment systems (as add-ons to the model BPT treatment system) for the acid pickling subcategory. These three alternatives were developed for all pickling operations.

BAT Alternative 1

The first BAT alternative treatment system reduces the flow being discharged from the rinse operations through the application of a cascade or countercurrent rinse system. The discharge is reduced by 90%. This reduced discharge is treated with the other wastewaters from the pickling operation by lime precipitation and clarification (the BPT model treatment system).

BAT Alternative 2

The second BAT alternative treatment system employs the same cascade rinse system as BAT Alternative 1. In addition, the treated effluent from the BPT model treatment system is further treated by filtration. The filter removes the residual toxic metals present in the wastewater as suspended solids.

BAT Alternative 3

The third BAT alternative treatment system also employs the cascade rinse system described in Alternative 1. In addition, evaporation, with the use of a multi-stage evaporator, a condenser, and a centrifuge to dewater the slurries generated, is used to treat the combined discharge from the pickling operation. The distillate quality water, which is produced by this system, is recycled back to the acid pickling operation. This alternative achieves zero discharge of the entire wastewater flow.

The BAT alternative treatment systems described above are illustrated in Figure VIII-1. The treatment technologies shown represent those technologies in use at one or more plants, or demonstrated in other wastewater treatment applications, and considered to be capable of attaining the respective BAT effluent levels.

Pollutants Limited at BAT

The BAT effluent limitations along with the model flow and effluent concentrations for each alternative treatment system are presented in Table X-1. The pollutants listed in this table are the same as those limited at BPT. The rationale for their selection is presented in Section IX.

Rationale for BAT

The following discussion presents the rationale for the selection of the BAT model treatment systems and for the determination of the flow rates and effluent concentrations of the limited pollutants.

Treatment Scheme

The cascade rinse system included in the first BAT alternative treatment system is commonly used by plants in the acid pickling subcategory. The model alternative treatment system is based on a flow reduction of 90%. This reduction is demonstrated at six pickling operations, through cascade rinsing or recycling of the rinsewaters. Cascade rinsing is used as the model, since it is the more commonly applied method for reducing flow. It is also the more costly method.

Filtration of treated wastewaters from pickling operations is demonstrated in the industry. It is also commonly applied to wastewaters from hot forming operations.

The evaporation technology included in the third BAT alternative has not been demonstrated in the steel industry. This alternative is costly and energy intensive in comparison to the other BAT alternative treatment systems.

BAT Model Flow Rates

The model BAT flows for spent pickle liquor and fume scrubber blowdown are the same as the BPT flows. At BAT, rinsewater flows are reduced by cascade rinsing, and absorber vent scrubber flows are reduced by recycle. While cascade rinsing is used as the model technology to reduce the discharge of rinsewaters, other methods, such as reuse and recirculation, are equally effective in reducing the discharge of pickling wastewaters. All of these methods are currently being used by the industry.

Table X-2 contains a list of plants that reduce their rinsewater flows by greater than 50%. Percent reduction in rinsewater flows is presented in the table. The Agency considers those plants achieving greater than 85% flow reduction as the best plants in the subcategory. The Agency averaged the percent flow reductions achieved by these best plants and, based upon that average, established 90% reduction as the basis for developing the model rinsewater flow rates. As noted in the table, two plants achieve 100% reduction and discharge no rinsewaters.

The information available to the Agency indicates that recycle of absorber vent scrubber waters is not practiced by the industry. However, the Agency believes that recycle technology applied for fume scrubbers is transferrable to absorber vent scrubbers. The sampling data presented in Section VII (Table VII-11 and VII-12) demonstrate that the wastewaters from fume scrubbers installed at hydrochloric acid pickling operations have the same characteristics as the absorber vent scrubber wastewaters. The scrubbers in both instances are also similar. Consequently, the Agency believes that absorber vent scrubber wastewaters can be recycled to the same extent demonstrated for fume scrubbers. In establishing the model flow rate of 25 gallons per minute for the blowdown from the absorber vent scrubber recycle system, the Agency has used a conservative recycle rate of 75%. Recycle rates achieved at fume scrubbers installed at hydrochloric acid pickling operations range from 82% - 98%.

The model flow rates for each segment are presented in Table X-1.

Wastewater Quality

The average effluent concentrations incorporated in each BAT alternative treatment system follow (the maximum values are enclosed in parentheses):

Pollutant, mg/l	BAT-1	BAT-2	BAT-3
Chromium[1]	0.4 (1.0)	0.1(0.3)	-
Lead[2]	0.15(0.45)	0.1(0.3)	-
Nickel[1]	0.3 (0.9)	0.1(0.3)	-
Zinc[2]	0.1 (0.3)	0.1(0.3	-

[1]Chromium and nickel are limited in the combination acid pickling subdivision only.
[2]Lead and zinc are limited in the sulfuric acid and hydrochloric acid pickling subdivisions only.

Toxic Metal Pollutants

A. BAT Alternative 1

The cascade rinse and absorber vent scrubber recycle systems in this alternative achieve substantial flow reductions which result in comparable pollutant load reductions. These reduced flows are combined with the fume scrubber blowdown and spent pickle liquor for treatment in the model BPT treatment system. The effluent quality is, therefore, the same as the BPT effluent quality. The derivations of these effluent concentrations are discussed in Section IX, and in Appendix A of Volume I.

B. BAT Alternative 2

BAT Alternative 2 is based on filtration of the effluent from BAT Alternative 1. The toxic metals effluent levels which can be achieved with this treatment technology were developed on the basis of the data analysis presented in Appendix A of Volume I. The data indicate that average toxic metals effluent concentrations of 0.10 mg/l can be attained with this treatment technology.

C. BAT Alternative 3

The evaporation system incorporated in BAT Alternative 3 achieves zero discharge of process wastewater pollutants.

Effluent Limitations for Alternative Treatment Systems

The effluent limitations for the BAT alternative treatment systems were calculated by multiplying the model effluent flows for each alternative treatment system and the corresponding concentration of metals with appropriate conversion factors. The effluent limitations developed for each alternative treatment system for each segment in this subcategory are presented in Table X-1.

Selection of a BAT Alternative

The BAT effluent limitations are the same as the BPT effluent limitations. The Agency did not select any of the alternative BAT

treatment systems for establishing the BAT effluent limitations. BAT Alternative 1 was rejected, since the Agency determined that cascade rinsing is not universally applicable. The configuration and space limitations at some existing pickling operations would require major reconstruction of the pickling line and, in some instances, the entire building to permit retrofitting of cascade rinse systems. This would make the costs prohibitively expensive. This retrofit problem is unique to cascade rinsing. This is the only instance in which treatment systems considered by the Agency involve modification to a production process. No such retrofit problems have been found for end-of-pipe treatment. As noted above, filtration does not result in substantial effluent reductions of the levels achieved by BPT technology. Hence, BAT Alternative 2 was not selected on the basis that it does not provide substantial removal beyond the BPT level. BAT Alternative 3 was found to be too costly and energy intensive to be used for treatment of these wastewaters, particularly in light of the effluent quality produced at the BPT level of treatment.

TABLE X-1

BAT EFFLUENT LIMITATIONS[1]
ACID PICKLING SUBCATEGORY

Subdivision	BAT Alternative	Flow (GPT)	Pollutants	Concentration Basis (mg/l) Ave.	Concentration Basis (mg/l) Max.	Effluent Limitations (kg/kkg) Ave.	Effluent Limitations (kg/kkg) Max.
Sulfuric Acid							
Strip/Sheet/Plate	BAT-1	40	Lead	0.15	0.45	0.0000250	0.0000751
			Zinc	0.1	0.3	0.0000167	0.0000500
	BAT-2	40	Lead	0.1	0.3	0.0000167	0.0000500
			Zinc	0.1	0.3	0.0000167	0.0000500
	BAT-3	0	Lead	-	-	-	-
			Zinc	-	-	-	-
Rod/Wire/Coil	BAT-1	50	Lead	0.15	0.45	0.0000313	0.0000938
			Zinc	0.1	0.3	0.0000209	0.0000626
	BAT-2	50	Lead	0.1	0.3	0.0000209	0.0000626
			Zinc	0.1	0.3	0.0000209	0.0000626
	BAT-3	0	Lead	-	-	-	-
			Zinc	-	-	-	-
Bar/Billet/Bloom	BAT-1	30	Lead	0.15	0.45	0.0000188	0.0000563
			Zinc	0.1	0.3	0.0000125	0.0000375
	BAT-2	30	Lead	0.1	0.3	0.0000125	0.0000375
			Zinc	0.1	0.3	0.0000125	0.0000375
	BAT-3	0	Lead	-	-	-	-
			Zinc	-	-	-	-
Pipe/Tube/Other	BAT-1	70	Lead	0.15	0.45	0.0000438	0.000131
			Zinc	0.1	0.3	0.0000292	0.0000876
	BAT-2	70	Lead	0.1	0.3	0.0000292	0.0000876
			Zinc	0.1	0.3	0.0000292	0.0000876
	BAT-3	0	Lead	-	-	-	-
			Zinc	-	-	-	-

TABLE X-1
BAT EFFLUENT LIMITATIONS[1]
ACID PICKLING SUBCATEGORY
PAGE 2

Subdivision	BAT Alternative	Flow (GPT)	Pollutants	Concentration Basis (mg/l) Ave.	Concentration Basis (mg/l) Max.	Effluent Limitations (kg/kkg) Ave.	Effluent Limitations (kg/kkg) Max.
Sulfuric Acid (continued)							
Fume Scrubber[2]	BAT-1	15 gpm	Lead	0.15	0.45	0.0123	0.0368
			Zinc	0.1	0.3	0.00819	0.0246
	BAT-2	15 gpm	Lead	0.1	0.3	0.00819	0.0246
			Zinc	0.1	0.3	0.00819	0.0246
	BAT-3	0	Lead	-	-	-	-
			Zinc	-	-	-	-
Hydrochloric Acid							
Strip/Sheet/Plate	BAT-1	40	Lead	0.15	0.45	0.0000250	0.0000751
			Zinc	0.1	0.3	0.0000167	0.0000500
	BAT-2	40	Lead	0.1	0.3	0.0000167	0.0000500
			Zinc	0.1	0.3	0.0000167	0.0000500
	BAT-3	0	Lead	-	-	-	-
			Zinc	-	-	-	-
Rod/Wire/Coil	BAT-1	60	Lead	0.15	0.45	0.0000375	0.000113
			Zinc	0.1	0.3	0.0000250	0.0000751
	BAT-2	60	Lead	0.1	0.3	0.0000250	0.0000751
			Zinc	0.1	0.3	0.0000250	0.0000751
	BAT-3	0	Lead	-	-	-	-
			Zinc	-	-	-	-
Pipe/Tube	BAT-1	110	Lead	0.15	0.45	0.0000688	0.000206
			Zinc	0.1	0.3	0.0000459	0.000138
	BAT-2	110	Lead	0.1	0.3	0.0000459	0.000138
			Zinc	0.1	0.3	0.0000459	0.000138
	BAT-3	0	Lead	-	-	-	-
			Zinc	-	-	-	-

TABLE X-1
BAT EFFLUENT LIMITATIONS[1]
ACID PICKLING SUBCATEGORY
PAGE 3

Subdivision	BAT Alternative	Flow (GPT)	Pollutants	Concentration Basis (mg/l) Ave.	Concentration Basis (mg/l) Max.	Effluent Limitations (kg/kkg) Ave.	Effluent Limitations (kg/kkg) Max.
Hydrochloric Acid (continued)							
Absorber Vent Scrubber[3]	BAT-1	25 gpm	Lead	0.15	0.45	0.0205	0.0615
			Zinc	0.1	0.3	0.0137	0.0411
	BAT-2	25 gpm	Lead	0.1	0.3	0.0137	0.0411
			Zinc	0.1	0.3	0.0137	0.0411
	BAT-3	0	Lead	-	-	-	-
			Zinc	-	-	-	-
Fume Scrubber[2]	BAT-1	15 gpm	Lead	0.15	0.45	0.0123	0.0368
			Zinc	0.1	0.3	0.00819	0.0246
	BAT-2	15 gpm	Lead	0.1	0.3	0.00819	0.0246
			Zinc	0.1	0.3	0.00819	0.0246
	BAT-3	0	Lead	-	-	-	-
			Zinc	-	-	-	-
Combination Acid							
Batch Strip/Sheet/Plate	BAT-1	60	Chromium	0.4	1.0	0.000100	0.000250
			Nickel	0.3	0.9	0.0000751	0.000225
	BAT-2	60	Chromium	0.1	0.3	0.0000250	0.0000751
			Nickel	0.1	0.3	0.0000250	0.0000751
	BAT-3	0	Chromium	-	-	-	-
			Nickel	-	-	-	-
Continuous Strip/Sheet/Plate	BAT-1	170	Chromium	0.4	1.0	0.000284	0.000709
			Nickel	0.3	0.9	0.000213	0.000638
	BAT-2	170	Chromium	0.1	0.3	0.0000709	0.000213
			Nickel	0.1	0.3	0.0000709	0.000213
	BAT-3	0	Chromium	-	-	-	-
			Nickel	-	-	-	-

TABLE X-1
BAT EFFLUENT LIMITATIONS(1)
ACID PICKLING SUBCATEGORY
PAGE 4

Subdivision	BAT Alternative	Flow (GPT)	Pollutants	Concentration Basis (mg/l) Ave.	Concentration Basis (mg/l) Max.	Effluent Limitations (kg/kkg) Ave.	Effluent Limitations (kg/kkg) Max.
Combination Acid (continued)							
Rod/Wire/Coil	BAT-1	70	Chromium	0.4	1.0	0.000117	0.000292
			Nickel	0.3	0.9	0.0000876	0.000263
	BAT-2	70	Chromium	0.1	0.3	0.0000292	0.0000876
			Nickel	0.1	0.3	0.0000292	0.0000876
	BAT-3	0	Chromium	-	-	-	-
			Nickel	-	-	-	-
Bar/Billet/Bloom	BAT-1	40	Chromium	0.4	1.0	0.0000667	0.000167
			Nickel	0.3	0.9	0.0000500	0.000150
	BAT-2	40	Chromium	0.1	0.3	0.0000167	0.0000500
			Nickel	0.1	0.3	0.0000167	0.0000500
	BAT-3	0	Chromium	-	-	-	-
			Nickel	-	-	-	-
Pipe/Tube	BAT-1	100	Chromium	0.4	1.0	0.000167	0.000417
			Nickel	0.3	0.9	0.000125	0.000375
	BAT-2	100	Chromium	0.1	0.3	0.0000417	0.000125
			Nickel	0.1	0.3	0.0000417	0.000125
	BAT-3	0	Chromium	-	-	-	-
			Nickel	-	-	-	-
Fume Scrubber(2)	BAT-1	15 gpm	Chromium	0.4	1.0	0.0328	0.0819
			Nickel	0.3	0.9	0.0246	0.0737
	BAT-2	15 gpm	Chromium	0.1	0.3	0.00819	0.0246
			Nickel	0.1	0.3	0.00819	0.0246
	BAT-3	0	Chromium	-	-	-	-
			Nickel	-	-	-	-

(1): No BAT alternatives have been selected for this subcategory, therefore the BAT limitations are based on the BPT treatment model.
(2): The fume scrubber limitations which are given in kg/day are in addition to the kg/kkg limitations shown for other pickling segments.
(3): The absorber vent scrubber limitations which are given in kg/day are in addition to the kg/kkg limitations for other pickling segments and the kg/day fume scrubber limitations for the hydrochloric acid subdivision.

TABLE X-2

DEVELOPMENT OF RINSE FLOW REDUCTION
ACID PICKLING

Plant	Method of Rinse Reduction	Percent of Rinse Reduction
0060M	Recycle	53
0112A-11	Recycle	88 *
02560-1	Cascade Rinse	75
02560-2	Cascade Rinse	75
02560-3	Cascade Rinse	75
02560-4	Cascade Rinse	75
0548-2	Recycle	47
0584F-1	Cascade Rinse	75
0584F-2	Cascade Rinse	92 *
0684F-1	Cascade Rinse	63
0684F-2	Cascade Rinse	63
0860F-1	Recycle	94 *
0860F-2	Recycle	94 *
0860F-3	Recycle	94 *
0860G	Recycle	86 *
0900	Recycle	51
O-2	Recycle	100 *
Q-2	Recycle	100 *

Average of the Best Rinse Reduction Percentages (indicated by *) 93.5%

Selected Rinse Reduction Percentage 90%

SECTION XI

BEST CONVENTIONAL POLLUTANT CONTROL TECHNOLOGY

Introduction

The 1977 Amendments added Section 301(b)(2)(E) to the Act establishing "best conventional pollutant control technology" (BCT) for discharges of conventional pollutants from existing industrial point sources. Conventional pollutants are those defined in Section 304(a)(4) [biochemical oxygen demanding pollutants (BOD_5), total suspended solids (TSS), fecal coliform, and pH]), and any additional pollutants defined by the Administrator as "conventional".(oil and grease, 44 FR 44501, July 30, 1979)

BCT is not an additional limitation, but replaces BAT for the control of conventional pollutants. In addition to other factors specified in Section 304(b)(4)(B), the Act requires that BCT limitations be assessed in light of a two part "cost-reasonableness" test. American Paper Institute v. EPA, 660 F.2d 954 (4th Cir. 1981). The first test compares the cost for private industry to reduce its conventional pollutants with the costs to publicly owned treatment works for similar levels of reduction in their discharge of these pollutants. The second text examines the cost-effectiveness of additional industrial treatment beyond BPT. EPA must find that limitations are "reasonable" under both tests before establishing them as BCT. In no case may BCT be less stringent than BPT.

EPA published its methodology for carrying out the BCT analysis on August 29, 1979 (44 F.R. 50732). In the case mentioned above, the Court of Appeals ordered EPA to correct data errors underlying EPA's calculation of the first test, and to apply the second cost test. (EPA had argued that a second cost test was not required).

The Agency has decided to set the BCT limitations equal to the BPT limitations for the acid pickling subcategory.

BCT Limitations

The BCT limitations are presented in Table XI-1. These limitations are the same as the BPT limitations for conventional pollutants. No additional treatment or costs beyond the BPT level is needed to comply with these limitations.

TABLE XI-1

BCT EFFLUENT LIMITATIONS
ACID PICKLING SUBCATEGORY

Subdivision	Flow (GPT)	Pollutants	Concentration Basis (mg/l) Ave.	Concentration Basis (mg/l) Max.	Effluent Limitations (kg/kkg) Ave.	Effluent Limitations (kg/kkg) Max.
Sulfuric Acid						
Strip/Sheet/Plate	180	TSS	30	70	0.0225	0.0525
		O&G(1)	10	30	0.00751	0.0225
		pH	6.0 to 9.0		6.0 to 9.0	
Rod/Wire/Coil	280	TSS	30	70	0.0350	0.0817
		O&G(1)	10	30	0.0117	0.0350
		pH	6.0 to 9.0		6.0 to 9.0	
Bar/Billet/Bloom	90	TSS	30	70	0.0113	0.0263
		O&G(1)	10	30	0.00375	0.0113
		pH	6.0 to 9.0		6.0 to 9.0	
Pipe/Tube/Other	500	TSS	30	70	0.0626	0.146
		O&G(1)	10	30	0.0209	0.0626
		pH	6.0 to 9.0		6.0 to 9.0	
Fume Scrubber(2)	15 gpm	TSS	30	70	2.46	5.73
		O&G(1)	10	30	0.819	2.46
		pH	6.0 to 9.0		6.0 to 9.0	

TABLE XI-1
BCT EFFLUENT LIMITATIONS
ACID PICKLING SUBCATEGORY
PAGE 2

Subdivision	Flow (GPT)	Pollutants	Concentration Basis (mg/l) Ave.	Concentration Basis (mg/l) Max.	Effluent Limitations (kg/kkg) Ave.	Effluent Limitations (kg/kkg) Max.
Hydrochloric Acid						
Strip/Sheet/Plate	280	TSS	30	70	0.0350	0.0817
		O&G(1)	10	30	0.0117	0.0350
		pH	6.0 to 9.0		6.0 to 9.0	
Rod/Wire/Coil	490	TSS	30	70	0.0613	0.143
		O&G(1)	10	30	0.0204	0.0613
		pH	6.0 to 9.0		6.0 to 9.0	
Pipe/Tube	1020	TSS	30	70	0.128	0.298
		O&G(1)	10	30	0.0425	0.128
		pH	6.0 to 9.0		6.0 to 9.0	
Absorber Vent Scrubber(3)	100 gpm	TSS	30	70	16.4	38.2
		O&G(1)	10	30	5.46	16.4
		pH	6.0 to 9.0		6.0 to 9.0	
Fume Scrubber(2)	15 gpm	TSS	30	70	2.46	5.73
		O&G(1)	10	30	0.819	2.46
		pH	6.0 to 9.0		6.0 to 9.0	

TABLE XI-1
BCT EFFLUENT LIMITATIONS
ACID PICKLING SUBCATEGORY
PAGE 3

Subdivision	Flow (GPT)	Pollutants	Concentration Basis (mg/l) Ave.	Concentration Basis (mg/l) Max.	Effluent Limitations (kg/kkg) Ave.	Effluent Limitations (kg/kkg) Max.
Combination Acid						
Batch Strip/Sheet/Plate	460	TSS	30	70	0.0576	0.134
		O&G(1)	10	30	0.0192	0.0576
		pH	6.0 to 9.0		6.0 to 9.0	
Continuous Strip/Sheet/Plate	1500	TSS	30	70	0.188	0.438
		O&G(1)	10	30	0.0626	0.188
		pH	6.0 to 9.0		6.0 to 9.0	
Rod/Wire/Coil	510	TSS	30	70	0.0638	0.149
		O&G(1)	10	30	0.0213	0.0638
		pH	6.0 to 9.0		6.0 to 9.0	
Bar/Billet/Bloom	230	TSS	30	70	0.0288	0.0671
		O&G(1)	10	30	0.00959	0.0288
		pH	6.0 to 9.0		6.0 to 9.0	
Pipe/Tube	770	TSS	30	70	0.0963	0.225
		O&G(1)	10	30	0.0321	0.0963
		pH	6.0 to 9.0		6.0 to 9.0	
Fume Scrubber(2)	15	TSS	30	70	2.46	5.73
		O&G(1)	10	30	0.819	2.46
		pH	6.0 to 9.0		6.0 to 9.0	

(1): Oil and grease is limited only when pickling wastewater is treated in combination with cold rolling wastewater.
(2): The fume scrubber limitations which are given in kg/day are in addition to the kg/kkg limitations shown for other pickling segments.
(3): The absorber vent scrubber limitations which are given in kg/day are in addition to the kg/kkg limitations for other pickling segments and the kg/day fume scrubber limitations for the hydrochloric acid subdivision.

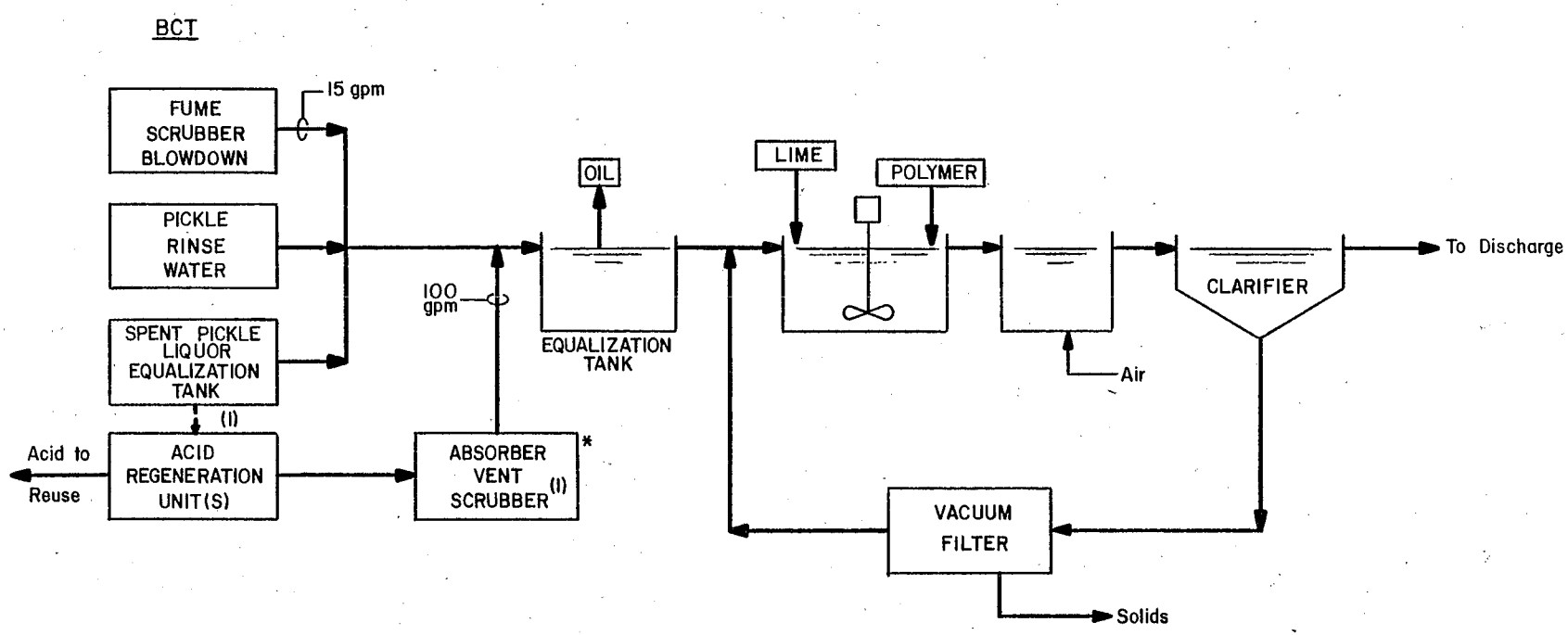

(1) Hydrochloric Acid Regeneration Systems Only.

* Replaces Spent Pickle Liquor Allowance for Hydrochloric Acid Regeneration System.

ENVIRONMENTAL PROTECTION AGENCY			
STEEL INDUSTRY STUDY ACID PICKLING BCT MODEL			
Dwn.12/29/81			FIGURE XI-1

ACID PICKLING SUBCATEGORY

SECTION XII

EFFLUENT QUALITY ATTAINABLE THROUGH THE APPLICATION OF NEW SOURCE PERFORMANCE STANDARDS

Introduction

New Source Performance Standards (NSPS), which must be achieved by new sources, are to specify the degree of effluent reduction achievable through the application of the Best Available Demonstrated Control Technology (BDT), including, where applicable, a standard permitting no discharge of pollutants. This section identifies the treatment alternatives considered by the Agency for NSPS and the resulting effluent standards for acid pickling operations. In addition, the rationale for selecting the NSPS treatment models, flow values, and effluent standards are discussed.

Identification of NSPS

Three NSPS alternative treatment systems have been developed for the acid pickling subcategory. These systems apply to each segment in the subcategory. Descriptions of these alternatives follow. Refer to Figure VIII-1 for illustrations of these model treatment systems.

NSPS Alternative 1

The first NSPS alternative treatment system is the same as the BPT and BAT-1 treatment systems except for the omission of the flows for absorber vent scrubber wastewater in the hydrocloric acid subdivision. The NSPS-1 treatment system consists of spent acid equalization; fume scrubber recycle; cascade rinsing; equalization of all wastewaters; oil separation; lime precipitation/neutralization; flocculation with polymer; aeration; clarification; and vacuum filtration of the clarifier underflow.

NSPS Alternative 2

This NSPS alternative treatment system is similar to the corresponding BPT and BAT-2 treatment systems. In this alternative, the effluent from NSPS 1 system is filtered using multi-media filtration.

NSPS Alternative 3

This NSPS alternative is similar to the corresponding BPT and BAT-3 treatment systems. The effluent from the NSPS-1 system is evaporated, with the condensate returned to the pickling operation. Zero discharge is achieved with this alternative.

Rationale for NSPS

Alternative Treatment Systems

The NSPS alternative treatment systems developed for the acid pickling subcategory are the same as the BPT, BAT-1, BAT-2 and BAT-3 treatment systems (except as noted above) described in Sections IX and X. The rationale presented in those sections with respect to flow reduction (cascade rinsing and fume scrubber recycle) and wastewater treatment is equally applicable to NSPS.

Flows

The applied and discharge flows for the NSPS treatment systems are identical to the flows used as the bases for BAT-1 and BAT-2. The development of these flows is discussed in detail in Sections IX and X.

Selection of NSPS Alternative

NSPS Alternative 1 has been selected as the model treatment system upon which the NSPS effluent standards for all segments of each subdivision are based. Cascade rinsing, which is a major component of this model treatment system, was rejected as a viable alternative at the BAT level due to problems associated with retrofitting. These problems do not exist for new sources. Cascade rinsing or other flow reduction methods can be readily incorporated at new sources. NSPS Alternative 2 (filtration) was not selected, because the improvements in effluent quality which are achieved through filtration are not substantial.

The NSPS effluent standards are presented in Table XII-1. The NSPS model treatment system is illustrated in Figure XII-1.

Demonstration of NSPS

Tables XII-2 to XII-4 present a list of existing plants that demonstrate the NSPS for sulfuric, hydrochloric and combination acid pickling subdivisions, respectively. These tables present a comparison of NSPS with effluent data from existing full scale treatment facilities. Effluent data are not available for plants which are known to practice cascade rinsing. Nevertheless, as indicated by the data in the tables, several plants with low applied flows are capable of complying with NSPS without cascade rinsing. The effluent data for the other plants indicate that the pollutant concentrations in the effluent from the treatment plants are less than the concentration basis used to establish the standards. As a result, if the discharge flows at these plants were reduced by cascade rinsing, these discharges would be able to comply with NSPS. As discussed previously in this Section and in Section X, discharge flows from pickling operations can be reduced by cascade rinsing and fume scrubber recycle, both of which are included in the NSPS model treatment system.

TABLE XII-1

NEW SOURCE PERFORMANCE STANDARDS
ACID PICKLING SUBCATEGORY

Subdivision	NSPS Alternative	Flow (GPT)	Pollutant	Concentration Basis (mg/l) Ave.	Concentration Basis (mg/l) Max.	Effluent Standards (kg/kkg) Ave.	Effluent Standards (kg/kkg) Max.
Sulfuric Acid							
Strip/Sheet/Plate	1*	40	TSS	30	70	0.00500	0.0117
			O&G(1)	10	30	0.00167	0.00500
			Lead	0.15	0.45	0.0000250	0.0000751
			Zinc	0.1	0.3	0.0000167	0.0000500
			pH, Units	6.0 to 9.0		6.0 to 9.0	
	2	40	TSS	15	40	0.00250	0.00667
			O&G(1)	-	10	-	0.00167
			Lead	0.1	0.3	0.0000167	0.0000500
			Zinc	0.1	0.3	0.0000167	0.0000500
			pH, Units	6.0 to 9.0		6.0 to 9.0	
	3	0	TSS	-	-	-	-
			O&G	-	-	-	-
			Lead	-	-	-	-
			Zinc	-	-	-	-
			pH, Units	-		-	
Rod/Wire/Coil	1*	50	TSS	30	70	0.00626	0.0146
			O&G(1)	10	30	0.00209	0.00626
			Lead	0.15	0.45	0.0000313	0.0000938
			Zinc	0.1	0.3	0.0000209	0.0000626
			pH, Units	6.0 to 9.0		6.0 to 9.0	
	2	50	TSS	15	40	0.00313	0.00834
			O&G(1)	-	10	-	0.00209
			Lead	0.1	0.3	0.0000209	0.0000626
			Zinc	0.1	0.3	0.0000209	0.0000626
			pH, Units	6.0 to 9.0		6.0 to 9.0	
	3	0	TSS	-	-	-	-
			O&G	-	-	-	-
			Lead	-	-	-	-
			Zinc	-	-	-	-
			pH, Units	-		-	
Bar/Billet/Bloom	1*	30	TSS	30	70	0.00375	0.00876
			O&G(1)	10	30	0.00125	0.00375
			Lead	0.15	0.45	0.0000188	0.0000563
			Zinc	0.1	0.3	0.0000125	0.0000375
			pH, Units	6.0 to 9.0		6.0 to 9.0	
	2	30	TSS	15	40	0.00188	0.00500
			O&G(1)	-	10	-	0.000125
			Lead	0.1	0.3	0.0000125	0.0000375
			Zinc	0.1	0.3	0.0000125	0.0000375
			pH, Units	6.0 to 9.0		6.0 to 9.0	
	3	0	TSS	-	-	-	-
			O&G	-	-	-	-
			Lead	-	-	-	-
			Zinc	-	-	-	-
			pH, Units	-		-	

TABLE XII-1
NEW SOURCE PERFORMANCE STANDARDS
ACID PICKLING SUBCATEGORY
PAGE 2

Subdivision	NSPS Alternative	Flow (GPT)	Pollutant	Concentration Basis (mg/l) Ave.	Concentration Basis (mg/l) Max.	Effluent Standards (kg/kkg) Ave.	Effluent Standards (kg/kkg) Max.
Sulfuric Acid (continued)							
Pipe/Tube/Other	1*	70	TSS	30	70	0.00876	0.0204
			O&G(1)	10	30	0.00292	0.00876
			Lead	0.15	0.45	0.0000438	0.000131
			Zinc	0.1	0.3	0.0000292	0.0000876
			pH, Units	6.0 to 9.0		6.0 to 9.0	
	2	70	TSS	15	40	0.00438	0.0117
			O&G(1)	-	10	-	0.00292
			Lead	0.1	0.3	0.0000292	0.0000876
		Zinc	0.1	0.3	0.0000292		0.0000876
			pH, Units	6.0 to 9.0		6.0 to 9.0	
	3	0	TSS	-	-	-	-
			O&G	-	-	-	-
			Lead	-	-	-	-
			Zinc	-	-	-	-
			pH, Units	-		-	
Fume Scrubber(2)	1*	15 gpm	TSS	30	70	2.46	5.73
			O&G(1)	10	30	0.819	2.46
			Lead	0.15	0.45	0.0123	0.0368
			Zinc	0.1	0.3	0.00819	0.0246
			pH, Units	6.0 to 9.0		6.0 to 9.0	
	2	15 gpm	TSS	15	40	1.23	3.28
			O&G(1)	-	10	-	0.819
			Lead	0.1	0.3	0.00819	0.0246
			Zinc	0.1	0.3	0.00819	0.0246
			pH, Units	6.0 to 9.0		6.0 to 9.0	
	3	0	TSS	-	-	-	-
			O&G	-	-	-	-
			Lead	-	-	-	-
			Zinc	-	-	-	-
			pH, Units	-		-	
Hydrochloric Acid							
Strip/Sheet/Plate	1*	40	TSS	30	70	0.00500	0.0117
			O&G(1)	10	30	0.00167	0.00500
			Lead	0.15	0.45	0.0000250	0.0000751
			Zinc	0.1	0.3	0.0000167	0.0000500
			pH, Units	6.0 to 9.0		6.0 to 9.0	
	2	40	TSS	15	40	0.00250	0.00667
			O&G(1)	-	10	-	0.00167
			Lead	0.1	0.3	0.0000167	0.0000500
			Zinc	0.1	0.3	0.0000167	0.0000500
			pH, Units	6.0 to 9.0		6.0 to 9.0	
	3	0	TSS	-	-	-	-
			O&G	-	-	-	-
			Lead	-	-	-	-
			Zinc	-	-	-	-
			pH, Units	-		-	

TABLE XII-1
NEW SOURCE PERFORMANCE STANDARDS
ACID PICKLING SUBCATEGORY
PAGE 3

Subdivision	NSPS Alternative	Flow (GPT)	Pollutant	Concentration Basis (mg/l) Ave.	Concentration Basis (mg/l) Max.	Effluent Standards (kg/kkg) Ave.	Effluent Standards (kg/kkg) Max.
Hydrochloric Acid (continued)							
Rod/Wire/Coil	1*	60	TSS(1)	30	70	0.00751	0.0175
			O&G(1)	10	30	0.00250	0.00751
			Lead	0.15	0.45	0.0000375	0.000113
			Zinc	0.1	0.3	0.0000250	0.0000751
			pH, Units	6.0 to 9.0		6.0 to 9.0	
	2	60	TSS(1)	15	40	0.00375	0.0100
			O&G(1)	-	10	-	0.00250
			Lead	0.1	0.3	0.0000250	0.0000751
			Zinc	0.1	0.3	0.0000250	0.0000751
			pH, Units	6.0 to 9.0		6.0 to 9.0	
	3	0	TSS	-	-	-	-
			O&G	-	-	-	-
			Lead	-	-	-	-
			Zinc	-	-	-	-
			pH, Units	-		-	
Pipe/Tube	1*	110	TSS(1)	30	70	0.0138	0.0321
			O&G(1)	10	30	0.00459	0.00138
			Lead	0.15	0.45	0.0000688	0.000206
			Zinc	0.1	0.3	0.0000459	0.000138
			pH, Units	6.0 to 9.0		6.0 to 9.0	
	2	110	TSS(1)	15	40	0.00688	0.0183
			O&G(1)	-	10	-	0.00459
			Lead	0.1	0.3	0.0000459	0.000138
			Zinc	0.1	0.3	0.0000459	0.000138
			pH, Units	6.0 to 9.0		6.0 to 9.0	
	3	0	TSS	-	-	-	-
			O&G	-	-	-	-
			Lead	-	-	-	-
			Zinc	-	-	-	-
			pH, Units	-		-	
Fume Scrubber(2)	1*	15 gpm	TSS(1)	30	70	2.46	5.73
			O&G(1)	10	30	0.819	2.46
			Lead	0.15	0.45	0.0123	0.0368
			Zinc	0.1	0.3	0.00819	0.0246
			pH, Units	6.0 to 9.0		6.0 to 9.0	
	2	15 gpm	TSS(1)	15	40	1.23	3.28
			O&G(1)	-	10	-	0.819
			Lead	0.1	0.3	0.00819	0.0246
			Zinc	0.1	0.3	0.00819	0.0246
			pH, Units	6.0 to 9.0		6.0 to 9.0	
	3	0	TSS	-	-	-	-
			O&G	-	-	-	-
			Lead	-	-	-	-
			Zinc	-	-	-	-
			pH, Units	-		-	

TABLE XII-1
NEW SOURCE PERFORMANCE STANDARDS
ACID PICKLING SUBCATEGORY
PAGE 4

Subdivision	NSPS Alternative	Flow (GPT)	Pollutant	Concentration Basis (mg/l) Ave.	Concentration Basis (mg/l) Max.	Effluent Standards (kg/kkg) Ave.	Effluent Standards (kg/kkg) Max.
Combination Acid							
Batch Strip/Sheet/Plate	1*	60	TSS(1)	30	70	0.00751	0.0175
			O&G(1)	10	30	0.00250	0.00751
			Chromium	0.4	1.0	0.000100	0.000250
			Nickel	0.3	0.9	0.0000751	0.000225
			pH, Units	6.0 to 9.0		6.0 to 9.0	
	2	60	TSS(1)	15	40	0.00376	0.0100
			O&G(1)	-	10	-	0.00250
			Chromium	0.1	0.3	0.0000250	0.0000751
			Nickel	0.1	0.3	0.0000250	0.0000751
			pH, Units	6.0 to 9.0		6.0 to 9.0	
	3	0	TSS	-	-	-	-
			O&G	-	-	-	-
			Chromium	-	-	-	-
			Nickel	-	-	-	-
			pH, Units	-		-	
Continuous Strip/Sheet/Plate	1*	170	TSS(1)	30	70	0.0213	0.0496
			O&G(1)	10	30	0.00709	0.0213
			Chromium	0.4	1.0	0.000284	0.000709
			Nickel	0.3	0.9	0.000213	0.000638
			pH, Units	6.0 to 9.0		6.0 to 9.0	
	2	170	TSS(1)	15	40	0.0106	0.0284
			O&G(1)	-	10	-	0.00709
			Chromium	0.1	0.3	0.0000709	0.000213
			Nickel	0.1	0.3	0.0000709	0.000213
			pH, Units	6.0 to 9.0		6.0 to 9.0	
	3	0	TSS	-	-	-	-
			O&G	-	-	-	-
			Chromium	-	-	-	-
			Nickel	-	-	-	-
			pH, Units	-		-	
Rod/Wire/Coil	1*	70	TSS(1)	30	70	0.00876	0.0204
			O&G(1)	10	30	0.00292	0.00876
			Chromium	0.4	1.0	0.000117	0.000292
			Nickel	0.3	0.9	0.0000876	0.000263
			pH, Units	6.0 to 9.0		6.0 to 9.0	
	2	70	TSS(1)	15	40	0.00438	0.0117
			O&G(1)	-	10	-	0.00292
			Chromium	0.1	0.3	0.0000292	0.0000876
			Nickel	0.1	0.3	0.0000292	0.0000876
			pH, Units	6.0 to 9.0		6.0 to 9.0	
	3	0	TSS	-	-	-	-
			O&G	-	-	-	-
			Chromium	-	-	-	-
			Nickel	-	-	-	-
			pH, Units	-		-	

TABLE XII-1
NEW SOURCE PERFORMANCE STANDARDS
ACID PICKLING SUBCATEGORY
PAGE 5

Subdivision	NSPS Alternative	Flow (GPT)	Pollutant	Concentration Basis (mg/l) Ave.	Concentration Basis (mg/l) Max.	Effluent Standards (kg/kkg) Ave.	Effluent Standards (kg/kkg) Max.
Combination Acid (continued)							
Bar/Billet/Bloom	1*	40	TSS	30	70	0.00500	0.0117
			O&G(1)	10	30	0.00167	0.00500
			Chromium	0.4	1.0	0.0000667	0.000167
			Nickel	0.3	0.9	0.0000500	0.000150
			pH, Units	6.0 to 9.0		6.0 to 9.0	
	2	40	TSS	15	40	0.00250	0.00667
			O&G(1)	-	10	-	0.00167
			Chromium	0.1	0.3	0.0000167	0.0000500
			Nickel	0.1	0.3	0.0000167	0.0000500
			pH, Units	6.0 to 9.0		6.0 to 9.0	
	3	0	TSS	-	-	-	-
			O&G	-	-	-	-
			Chromium	-	-	-	-
			Nickel	-	-	-	-
			pH, Units	-		-	
Pipe/Tube	1*	100	TSS	30	70	0.0125	0.0292
			O&G(1)	10	30	0.00417	0.0125
			Chromium	0.4	1.0	0.000167	0.000417
			Nickel	0.3	0.9	0.000125	0.000375
			pH, Units	6.0 to 9.0		6.0 to 9.0	
	2	100	TSS	15	40	0.00626	0.0167
			O&G(1)	-	10	-	0.00417
			Chromium	0.1	0.3	0.0000417	0.000125
			Nickel	0.1	0.3	0.0000417	0.000125
			pH, Units	6.0 to 9.0		6.0 to 9.0	
	3	0	TSS	-	-	-	-
			O&G	-	-	-	-
			Chromium	-	-	-	-
			Nickel	-	-	-	-
			pH, Units	-		-	
Fume Scrubber(2)	1*	15 gpm	TSS	30	70	2.46	5.73
			O&G(1)	10	30	0.819	2.46
			Chromium	0.4	1.0	0.0328	0.0819
			Nickel	0.3	0.9	0.0246	0.0737
			pH, Units	6.0 to 9.0		6.0 to 9.0	
	2	15 gpm	TSS	15	40	1.23	3.28
			O&G(1)	-	10	-	0.819
			Chromium	0.1	0.3	0.00819	0.0246
			Nickel	0.1	0.3	0.00819	0.0246
			pH, Units	6.0 to 9.0		6.0 to 9.0	
	3	0	TSS	-	-	-	-
			O&G	-	-	-	-
			Chromium	-	-	-	-
			Nickel	-	-	-	-
			pH, Units	-		-	

* : Alternative selected
(1): Oil and grease is limited only when pickling wastewater is treated in combination with cold rolling wastewater.
(2): The fume scrubber standards which are given in kg/day are in addition to the kg/kkg standards shown for each pickling segment.

TABLE XII-2

JUSTIFICATION OF NSPS EFFLUENT STANDARDS
SULFURIC ACID PICKLING

Subdivision	Plant	Actual Effluent Loads (kg/kkg of Product) TSS	Oil & Grease(1)	Chromium	Lead	Nickel	Zinc	pH	C&TT
Sulfuric Acid									
Strip/Sheet/Plate									
Effluent Standard		0.00500	0.00167	-	0.0000250	-	0.0000167	6.0-9.0	
	094A	0.00096	0.00041	-	*	-	*	7.6-7.8	E,SS,T,FLP,NL
	094B	0.0013	0.00083	-	*	-	*	7.6-7.8	E,SS,T,FLP,NL
	T-2	0	0	-	0	-	0	-	AU
	QQ-2	0.00015	0.00056	-	NA	-	NA	7.5	CR,RR,EB,NL,CL,SL
	WW-2	0.0006	0.00007	-	NA	-	NA	8.0	FLP,FLA,NL,CL,SS,SL
Rod/Wire/Coil									
Effluent Standard		0.00626	0.00209	-	0.0000313	-	0.0000209	6.0-9.0	
	091	0.00064	*	-	<0.0000005	-	0.000006	8.3-8.5	E,NL,CL,FP
	I-2A	0.0016	0.00042	-	NA	-	NA	6.7	SL
	O-2	0	0	-	0	-	0	-	AU
	Q-2	0	0	-	0	-	0	-	AU
Bar/Billet/Bloom									
Effluent Standard		0.00375	0.00125	-	0.0000188	-	0.0000125	6.0-9.0	
	No plants in this subdivision were sampled.								
Pipe/Tube/Other									
Effluent Standard		0.00876	0.00292	-	0.0000438	-	0.0000292	6.0-9.0	
	090	0.000066	*	-	<0.0000005	-	*	6.6-9.0	E,AE,NL,CL,FLP
	096	<0.0028	0.0026	-	*	-	*	7.3-7.7	AE,NL,CL,F
	S-2	0	0	-	0	-	0	-	RTP

TABLE XII-2
JUSTIFICATION OF NSPS EFFLUENT STANDARDS
SULFURIC ACID PICKLING
PAGE 2

NOTE:

(1) Load permitted only when joint treatment with cold rolling wastewater is practiced.
NA : Not analyzed.
* : Standard not supported.

C&TT CODE

AE : Aeration
AU : Acid Recovery
CL : Clarifier
CR : Chemical Reduction
E : Equalization
EB : Emulsion Breaking
F : Filtration
FLA : Flocculation w/Alum
FLP: Flocculation w/Polymer
FP : Pressure Filtration
NL : Neutralization w/Lime
RR : Rinse Reduction
RTP: Recycle
SL : Settling Lagoon
SS : Surface Skimming
T : Thickener
VF : Vacuum Filter

TABLE XII-3

JUSTIFICATION OF NSPS EFFLUENT STANDARDS
HYDROCHLORIC ACID PICKLING

Subdivision	Plant	Actual Effluent Loads (kg/kkg of Product) TSS	Oil & Grease(1)	Chromium	Lead	Nickel	Zinc	pH	C&TT
Hydrochloric Acid									
Strip/Sheet/Plate									
Effluent Standard		0.00500	0.00167	-	0.0000250	-	0.0000167	6.0-9.0	
	099	0.00043	0.00012	-	<0.0000005	-	<0.0000005	7.7	NL,SL
	BB-2	0.0018	*	-	NA	-	NA	7.7	AE,FLP,CL,VF,SL,E
Rod/Wire/Coil									
Effluent Standard		0.00751	0.00250	-	0.0000375	-	0.0000250	6.0-9.0	
	I-2	0.0014	0.00041	-	NA	-	NA	6.7	SL
	U-2	*	0.00194	-	NA	-	NA	8.5	Neut. w/Soda Ash
Pipe/Tube									
Effluent Standard		0.0138	0.00459	-	0.0000688	-	0.0000459	6.0-9.0	

No plants in this subdivision were sampled.

TABLE XII-3
JUSTIFICATION OF NSPS EFFLUENT STANDARDS
HYDROCHLORIC ACID PICKLING
PAGE 2

NOTE:

(1) Load permitted only when joint treatment with cold rolling wastewater is practiced.
NA: Not analyzed.
* : Standard not supported.

C&TT CODE

AE : Aeration
CL : Clarifier
E : Equalization
FDS: Filtration-Deep Bed Sand
FLP: Flocculation w/Polymer
NL : Neutralization w/Lime
SL : Settling Lagoon
VF : Vacuum Filter

TABLE XII-4

JUSTIFICATION OF NSPS EFFLUENT STANDARDS
COMBINATION ACID PICKLING

Subdivision	Plant	Actual Effluent Loads (kg/kkg of Product) TSS	Oil & Grease[1]	Chromium	Lead	Nickel	Zinc	pH	C&TT
Combination Acid									
Batch Strip/Sheet/Plate Effluent Standard		0.00751	0.00250	0.000100	-	0.0000751	-	6.0-9.0	
	C	*	0.00011	*	-	*	-	2.7-7.2	E,NL,PSP
Cont. Strip/Sheet/Plate Effluent Standard		0.0213	0.00709	0.000284	-	0.000213	-	6.0-9.0	
		*	*	*	-	*	-		
Rod/Wire/Coil Effluent Standard		0.00876	0.00292	0.000117	-	0.0000876	-	6.0-9.0	
	No plants in this subdivision were sampled.								
Bar/Billet/Bloom Effluent Standard		0.00500	0.00167	0.0000667	-	0.0000500	-	6.0-9.0	
		*	*	*	-	*	-		
Pipe/Tube Effluent Standard		0.0125	0.00417	0.000167	-	0.000125	-	6.0-9.0	
	123	0.0063	0.00067	0.00013	-	*	-	7.5-8.3	E,N,FLP,CL
	U	*	0.0028	0.00011	-	0.000028	-	10.4	NL,SL

TABLE XII-4
JUSTIFICATION OF NSPS EFFLUENT STANDARDS
COMBINATION ACID PICKLING
PAGE 2

NOTE:

(1) Load permitted only when joint treatment with cold rolling wastewater is practiced.
NA: Not analyzed.
* : Standard not supported.

C&TT CODE

CL : Clarifier
CR : Chemical Reduction
E : Equalization
FLP: Flocculation w/Polymer
NL : Neutralization w/Lime
NW : Neutralization w/Other Wastes
PSP: Primary Scale Pit
SL : Settling Lagoon
T : Thickener

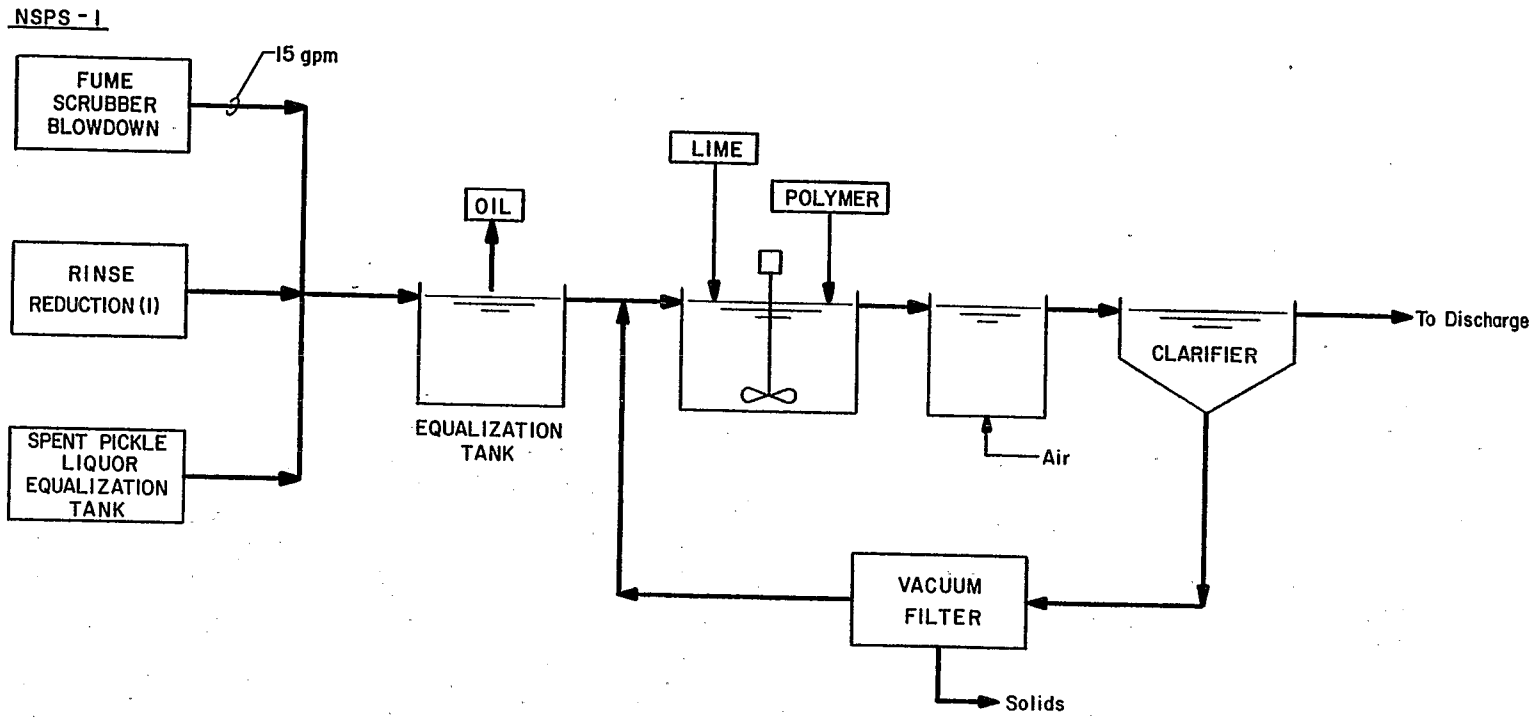

(I) Reduces Rinse Flow By 90%.

ENVIRONMENTAL PROTECTION AGENCY

STEEL INDUSTRY STUDY
ACID PICKLING
NSPS MODEL

Dwn. 12/29/81

FIGURE XII-1

ACID PICKLING SUBCATEGORY

SECTION XIII

PRETREATMENT STANDARDS FOR DISCHARGES TO PUBLICLY OWNED TREATMENT WORKS

Introduction

This section presents alternative pretreatment systems available for acid pickling operations with discharges to publicly owned treatment works (POTWs). Wastewaters from several pickling operations are discharged to POTWs. The Agency developed separate pretreatment systems for existing (PSES) and new (PSNS) operations that apply to each segment within each acid pickling subdivision. These alternative pretreatment systems are illustrated in Figure VIII-1.

A discussion of the general pretreatment and categorical pretreatment standards applying to acid pickling operations follows.

General Pretreatment Standards

For detailed information concerning Pretreatment Standards, refer to 46 FR 9404 et seq, "General Pretreatment Regulations for Existing and New Sources of Pollution," (January 28, 1981). See also 47 FR 4518 (February 1, 1982). In particular, 40 CFR Part 403 describes national standards (prohibited discharges and categorical standards), revision of categorical standards through removal allowances, and POTW pretreatment programs. In establishing pretreatment standards for acid pickling operations, the Agency considered the objectives and requirements of the general pretreatment regulations. The Agency determined that uncontrolled discharges of acid pickling wastewaters to POTWs would result in pass through of toxic pollutants.

Identification of Pretreatment Alternatives

Treatment Models

The PSES systems developed for acid pickling operations are the same as the BPT model treatment systems and the BAT alternative treatment systems described in Sections IX and X. The PSNS systems developed for this subcategory are identical to the NSPS treatment systems. Refer to Section XII.

Flows

The applied and discharge model treatment system flow rates developed for the PSES systems are identical to the BAT applied and discharge flows for each of the segments within each of the acid pickling subdivisions. Refer to Sections IX and X for the development of these

flow values. Similarly, the applied and discharge flows developed for the PSNS systems are identical to the NSPS applied and discharge flows discussed in Section XII.

Alternative Pretreatment Systems

PSES Alternative 1

This alternative pretreatment system is identical to the BPT model treatment system and achieves the same effluent quality. The treatment system includes equalization of spent pickle liquor; fume scrubber recycle; equalization of the combined wastewaters, i.e., spent pickle liquor, rinsewater, fume scrubber blowdown and absorber vent scrubber discharge, where applicable; oil removal; lime precipitation/neutralization; polymer addition; aeration; clarification and vacuum filtration of the sludge.

PSES Alternative 2

This pretreatment alternative is the same as the BAT Alternative 1 treatment system and includes the treatment components noted above and flow reduction through cascade rinsing and absorber vent scrubber recycle.

PSES Alternative 3

This alternative is the same as BAT Alternative 2 treatment system. The effluent from PSES Alternative 2 is further treated by filtration. The effluent standards achieved with this alternative are the same as the BAT-2 limitations.

PSES Alternative 4

In this alternative the effluent from PSES Alternative 2 is evaporated, and the condensate is recycled back to the pickling operation. Zero discharge is achieved with this alternative.

PSNS Alternative 1

This alternative pretreatment system is identical to the NSPS Alternative 1 model treatment system and achieves the same effluent standards for toxic metals.

PSNS Alternative 2

This alternative pretreatment system is identical to the NSPS Alternative 2 treatment system. The effluent from PSNS Alternative 1 is further treated by filtration. The effluent standards achieved with this alternative are the same as the NSPS-2 effluent standards for toxic metals.

PSNS Alternative 3

This alternative pretreatment system is identical to the NSPS Alternative 3 treatment system. The effluent from PSNS Alternative 1 is evaporated, and the condensate is recycled back to the pickling operation. This alternative achieves zero discharge.

Selection of Pretreatment Alternatives

PSES Alternative 1 has been selected as the model treatment system for all segments in each acid pickling subdivision. This treatment system is the same as the BPT and BAT model treatment system. PSNS Alternative 1 was selected as the model treatment system upon which PSNS for all segments are based. This model is identical to the model treatment system selected for new sources.

The selected PSES and PSNS model treatment systems will prevent the pass through of toxic metals at POTWs. A comparison of toxic metals removal achieved at PSES and PSNS and the removals attained at POTWs follows:

Pollutant Removal Rate Comparison

	PSES Model	PSNS Model	Actual POTW
Chromium	99.9%	99.9%	65%
Lead	82-99%	99.9%	48%
Nickel	99.7%	99.9%	19%
Zinc	99.6%	99.9%	65%

As shown above, the selected PSES and PSNS alternatives will prevent pass through of toxic metals at POTWs to a significantly greater degree than would occur if acid pickling wastewaters were discharged untreated to POTWs.

The PSES and PSNS effluent standards are presented in Table XIII-1. These pretreatment standards are the same as the BPT and NSPS standards. Thus, the demonstration of the achievability of the BPT limitations presented in Section IX is equally applicable for PSES; and the demonstration presented for NSPS in Section XII is applicable for PSNS. The model PSES and PSNS treatment systems are illustrated in Figures XIII-1 and XIII-2.

TABLE XIII-1

PRETREATMENT EFFLUENT STANDARDS (EXISTING AND NEW SOURCES)
ACID PICKLING SUBCATEGORY

Subdivision	Pretreatment Alternative(1)	Flow (GPT)	Pollutant	Concentration Basis (mg/l) Ave.	Concentration Basis (mg/l) Max.	Effluent Standards (kg/kkg) Ave.	Effluent Standards (kg/kkg) Max.
Sulfuric Acid							
Strip/Sheet/Plate	PSES-1	180	Lead	0.15	0.45	0.000113	0.000338
			Zinc	0.1	0.3	0.0000751	0.000225
	PSES-2/PSNS-1	40	Lead	0.15	0.45	0.0000250	0.0000751
			Zinc	0.1	0.3	0.0000167	0.0000500
	PSES-3/PSNS-2	40	Lead	0.1	0.3	0.0000167	0.0000500
			Zinc	0.1	0.3	0.0000167	0.0000500
	PSES-4/PSNS-3	0	Lead	-	-	-	-
			Zinc	-	-	-	-
Rod/Wire/Coil	PSES-1	280	Lead	0.15	0.45	0.000175	0.000525
			Zinc	0.1	0.3	0.000117	0.000350
	PSES-2/PSNS-1	50	Lead	0.15	0.45	0.0000313	0.0000938
			Zinc	0.1	0.3	0.0000209	0.0000626
	PSES-3/PSNS-2	50	Lead	0.1	0.3	0.0000209	0.0000626
			Zinc	0.1	0.3	0.0000209	0.0000626
	PSES-4/PSNS-3	0	Lead	-	-	-	-
			Zinc	-	-	-	-
Bar/Billet/Bloom	PSES-1	90	Lead	0.15	0.45	0.0000563	0.000169
			Zinc	0.1	0.3	0.0000375	0.000113
	PSES-2/PSNS-1	30	Lead	0.15	0.45	0.0000188	0.0000563
			Zinc	0.1	0.3	0.0000125	0.0000375
	PSES-3/PSNS-2	30	Lead	0.1	0.3	0.0000125	0.0000375
			Zinc	0.1	0.3	0.0000125	0.0000375
	PSES-4/PSNS-3	0	Lead	-	-	-	-
			Zinc	-	-	-	-
Pipe/Tube/Other	PSES-1	500	Lead	0.15	0.45	0.000313	0.000938
			Zinc	0.1	0.3	0.000209	0.000626
	PSES-2/PSNS-1	70	Lead	0.15	0.45	0.0000438	0.000131
			Zinc	0.1	0.3	0.0000292	0.0000876
	PSES-3/PSNS-2	70	Lead	0.1	0.3	0.0000292	0.0000876
			Zinc	0.1	0.3	0.0000292	0.0000876
	PSES-4/PSNS-3	0	Lead	-	-	-	-
			Zinc	-	-	-	-
Fume Scrubber(2)	PSES-1	15 gpm	Lead	0.15	0.45	0.0123	0.0368
			Zinc	0.1	0.3	0.00819	0.0246
	PSES-2/PSNS-1	15 gpm	Lead	0.15	0.45	0.0123	0.0368
			Zinc	0.1	0.3	0.00819	0.0246
	PSES-3/PSNS-2	15 gpm	Lead	0.1	0.3	0.00819	0.0246
			Zinc	0.1	0.3	0.00819	0.0246
	PSES-4/PSNS-3	0	Lead	-	-	-	-
			Zinc	-	-	-	-

TABLE XIII-1
PRETREATMENT EFFLUENT STANDARDS (EXISTING AND NEW SOURCES)
ACID PICKLING SUBCATEGORY
PAGE 2

Subdivision	Pretreatment Alternative(1)	Flow (GPT)	Pollutant	Concentration Basis (mg/l) Ave.	Concentration Basis (mg/l) Max.	Effluent Standards (kg/kkg) Ave.	Effluent Standards (kg/kkg) Max.
Hydrochloric Acid							
Strip/Sheet/Plate	PSES-1	280	Lead	0.15	0.45	0.000175	0.000525
			Zinc	0.1	0.3	0.000117	0.000350
	PSES-2/PSNS-1	40	Lead	0.15	0.45	0.0000250	0.0000751
			Zinc	0.1	0.3	0.0000167	0.0000500
	PSES-3/PSNS-2	40	Lead	0.1	0.3	0.0000167	0.0000500
			Zinc	0.1	0.3	0.0000167	0.0000500
	PSES-4/PSNS-3	0	Lead	-	-	-	-
			Zinc	-	-	-	-
Rod/Wire/Coil	PSES-1	490	Lead	0.15	0.45	0.000307	0.000919
			Zinc	0.1	0.3	0.000204	0.000613
	PSES-2/PSNS-1	60	Lead	0.15	0.45	0.0000375	0.000113
			Zinc	0.1	0.3	0.0000250	0.0000751
	PSES-3/PSNS-2	60	Lead	0.1	0.3	0.0000250	0.0000751
			Zinc	0.1	0.3	0.0000250	0.0000751
	PSES-4/PSNS-3	0	Lead	-	-	-	-
			Zinc	-	-	-	-
Pipe/Tube	PSES-1	1020	Lead	0.15	0.45	0.000638	0.00191
			Zinc	0.1	0.3	0.000425	0.00128
	PSES-2/PSNS-1	110	Lead	0.15	0.45	0.0000688	0.000206
			Zinc	0.1	0.3	0.0000459	0.000138
	PSES-3/PSNS-2	110	Lead	0.1	0.3	0.0000459	0.000138
			Zinc	0.1	0.3	0.0000459	0.000138
	PSES-4/PSNS-3	0	Lead	-	-	-	-
			Zinc	-	-	-	-
Absorber Vent Scrubber(3)	PSES-1	100 gpm	Lead	0.15	0.45	0.0819	0.246
			Zinc	0.1	0.3	0.0546	0.164
	PSES-2	25 gpm	Lead	0.15	0.45	0.0205	0.0614
			Zinc	0.1	0.3	0.0136	0.0409
	PSES-3	25 gpm	Lead	0.1	0.3	0.0136	0.0409
			Zinc	0.1	0.3	0.0136	0.0409
	PSES-4	0	Lead	-	-	-	-
			Zinc	-	-	-	-
Fume Scrubber(2)	PSES-1	15 gpm	Lead	0.15	0.45	0.0123	0.0368
			Zinc	0.1	0.3	0.00819	0.0246
	PSES-2/PSNS-1	15 gpm	Lead	0.15	0.45	0.0123	0.0368
			Zinc	0.1	0.3	0.00819	0.0246
	PSES-3/PSNS-2	15 gpm	Lead	0.1	0.3	0.00819	0.0246
			Zinc	0.1	0.3	0.00819	0.0246
	PSES-4/PSNS-3	0	Lead	-	-	-	-
			Zinc	-	-	-	-

TABLE XIII-1
PRETREATMENT EFFLUENT STANDARDS (EXISTING AND NEW SOURCES)
ACID PICKLING SUBCATEGORY
PAGE 3

Subdivision	Pretreatment Alternative(1)	Flow (GPT)	Pollutant	Concentration Basis (mg/l) Ave.	Concentration Basis (mg/l) Max.	Effluent Standards (kg/kkg) Ave.	Effluent Standards (kg/kkg) Max.
Combination Acid							
Batch Strip/Sheet/Plate	PSES-1	460	Chromium	0.4	1.0	0.000767	0.00192
			Nickel	0.3	0.9	0.000576	0.00173
	PSES-2/PSNS-1	60	Chromium	0.4	1.0	0.000100	0.000250
			Nickel	0.3	0.9	0.0000751	0.000225
	PSES-3/PSNS-2	60	Chromium	0.1	0.3	0.0000250	0.0000751
			Nickel	0.1	0.3	0.0000250	0.0000751
	PSES-4/PSNS-3	0	Chromium	-	-	-	-
			Nickel	-	-	-	-
Continuous Strip/Sheet/Plate	PSES-1	1500	Chromium	0.4	1.0	0.00250	0.00626
			Nickel	0.3	0.9	0.00188	0.00563
	PSES-2/PSNS-1	170	Chromium	0.4	1.0	0.000284	0.000709
			Nickel	0.3	0.9	0.000213	0.000638
	PSES-3/PSNS-2	170	Chromium	0.1	0.3	0.0000709	0.000213
			Nickel	0.1	0.3	0.0000709	0.000213
	PSES-4/PSNS-3	0	Chromium	-	-	-	-
			Nickel	-	-	-	-
Rod/Wire/Coil	PSES-1	510	Chromium	0.4	1.0	0.000851	0.00213
			Nickel	0.3	0.9	0.000638	0.00191
	PSES-2/PSNS-1	70	Chromium	0.4	1.0	0.000117	0.000292
			Nickel	0.3	0.9	0.0000876	0.000263
	PSES-3/PSNS-2	70	Chromium	0.1	0.3	0.0000292	0.0000876
			Nickel	0.1	0.3	0.0000292	0.0000876
	PSES-4/PSNS-3	0	Chromium	-	-	-	-
			Nickel	-	-	-	-
Bar/Billet/Bloom	PSES-1	230	Chromium	0.4	1.0	0.000384	0.000959
			Nickel	0.3	0.9	0.000288	0.000863
	PSES-2/PSNS-1	40	Chromium	0.4	1.0	0.0000667	0.000167
			Nickel	0.3	0.9	0.0000500	0.000150
	PSES-3/PSNS-2	40	Chromium	0.1	0.3	0.0000167	0.0000500
			Nickel	0.1	0.3	0.0000167	0.0000500
	PSES-4/PSNS-3	0	Chromium	-	-	-	-
			Nickel	-	-	-	-
Pipe/Tube	PSES-1	770	Chromium	0.4	1.0	0.00128	0.00321
			Nickel	0.3	0.9	0.000963	0.00289
	PSES-2/PSNS-1	100	Chromium	0.4	1.0	0.000167	0.000417
			Nickel	0.3	0.9	0.000125	0.000375
	PSES-3/PSNS-2	100	Chromium	0.1	0.3	0.0000417	0.000125
			Nickel	0.1	0.3	0.0000417	0.000125
	PSES-4/PSNS-3	0	Chromium	-	-	-	-
			Nickel	-	-	-	-

TABLE XIII-1
PRETREATMENT EFFLUENT STANDARDS (EXISTING AND NEW SOURCES)
ACID PICKLING SUBCATEGORY
PAGE 4

Subdivision	Pretreatment Alternative(1)	Flow (GPT)	Pollutant	Concentration Basis (mg/l) Ave.	Concentration Basis (mg/l) Max.	Effluent Standards (kg/kkg) Ave.	Effluent Standards (kg/kkg) Max.
Combination Acid (continued)							
Fume Scrubber(2)	PSES-1	15 gpm	Chromium	0.4	1.0	0.0328	0.0819
			Nickel	0.3	0.9	0.0246	0.0737
	PSES-2/PSNS-1	15 gpm	Chromium	0.4	1.0	0.033	0.082
			Nickel	0.3	0.9	0.025	0.074
	PSES-3/PSNS-2	15 gpm	Chromium	0.1	0.3	0.00819	0.0246
			Nickel	0.1	0.3	0.00819	0.0246
	PSES-4/PSNS-3	0	Chromium	-	-	-	-
			Nickel	-	-	-	-

(1): The PSES-1 alternative is the selected pretreatment alternative for all existing sources.
: The PSNS-2 alternative is the selected pretreatment alternative for all new sources.
(2): The fume scrubber standards which are given in kg/day are in addition to the kg/kkg standards shown for each pickling segment.
(3): The absorber vent scrubber standards which are given in kg/day are in addition to the kg/kkg standards for other pickling segments and the kg/day fume scrubber standards for for the hydrochloric acid subdivision.

PSES - I

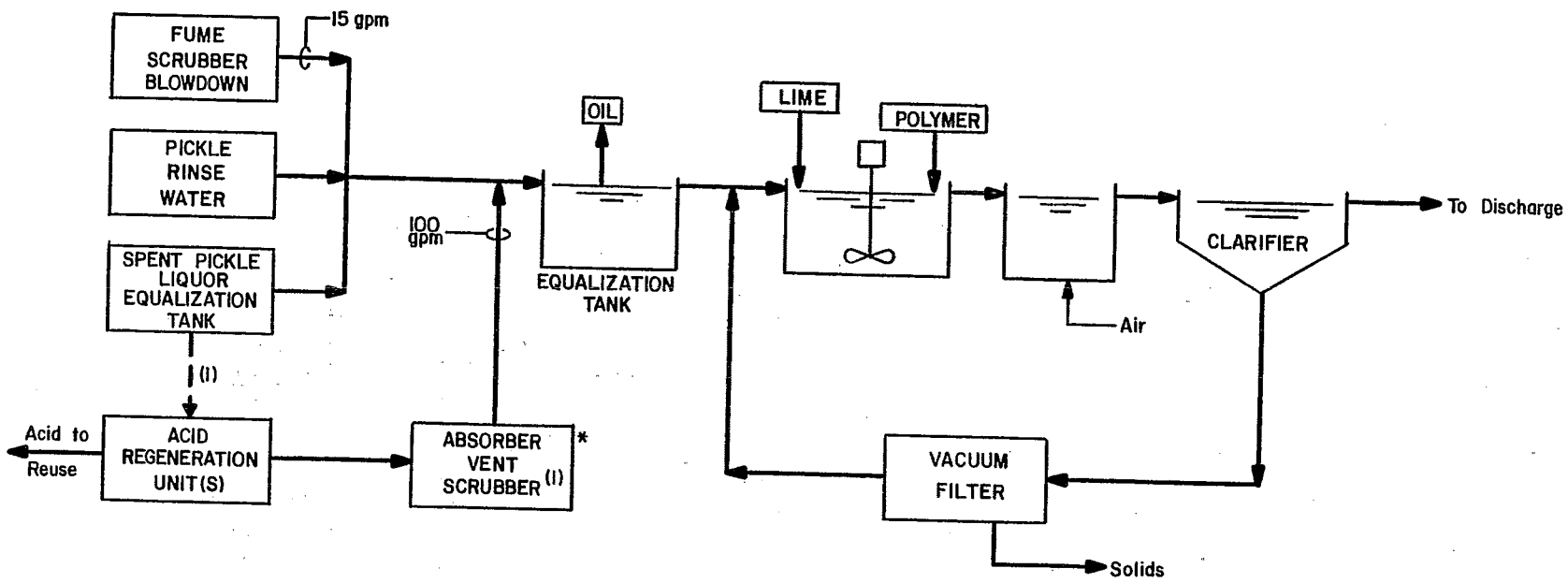

(1) Hydrochloric Acid Regeneration Systems Only.

* Replaces Spent Pickle Liquor Allowance for Hydrochloric Acid Regeneration System.

ENVIRONMENTAL PROTECTION AGENCY			
STEEL INDUSTRY STUDY ACID PICKLING PSES MODEL			
Dwn. 12/29/81			FIGURE XIII-1

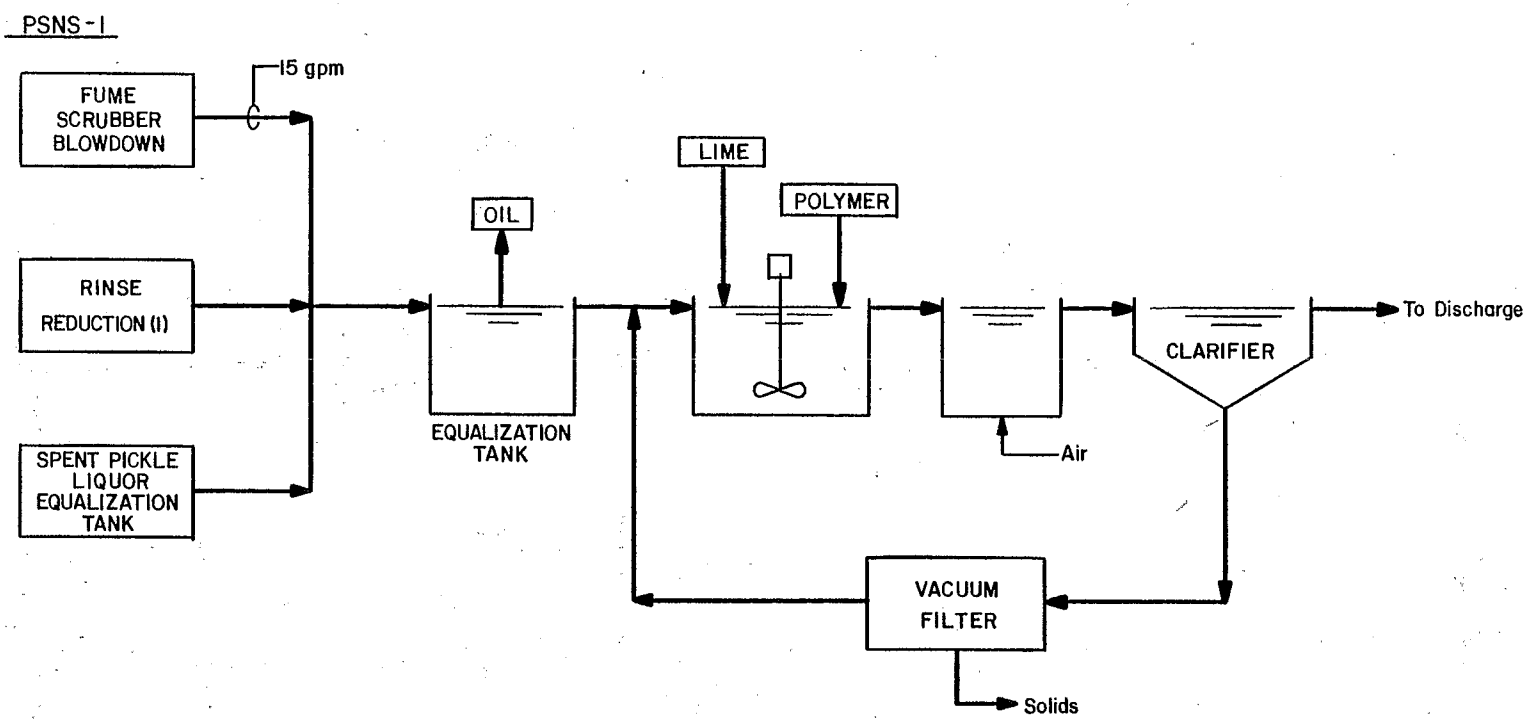

(I) Reduces Rinse Flow By 90 %

ENVIRONMENTAL PROTECTION AGENCY

STEEL INDUSTRY STUDY
ACID PICKLING
PSNS MODEL

Dwn. 12/29/81

FIGURE XIII-2

☆U.S. GOVERNMENT PRINTING OFFICE: 1982-361-085:4455

United States
Environmental Protection
Agency

Official Business
Penalty for Private Use
$300

Special Fourth-Class Rate
Book
Postage and Fees Paid
EPA
Permit No. G-35

Washington DC 20460