United States
Environmental Protection
Agency

Industrial Technology Division
WH - 552
Washington, DC 20460

EPA 440/1-86/019
September 1986

Water

EPA

Development Document for Effluent Limitations Guidelines and Standards for the Nonferrous Metals Forming and Metal Powders Point Source Category

Final

Volume I

566-1070
202-~~260-7151~~
Fax: 202-~~260-7465~~
jett.george@epa.gov

George M. Jett
Chemical Engineer
U.S. Environmental Protection Agency
Engineering and Analysis Division (4303)
1200 Pennsylvania Avenue, NW
Washington, D.C. 20460

DEVELOPMENT DOCUMENT

for

EFFLUENT LIMITATIONS GUIDELINES AND STANDARDS

for the

NONFERROUS METALS FORMING AND METAL POWDERS POINT SOURCE CATEGORY

VOLUME I

Lee M. Thomas
Administrator

Lawrence J. Jensen
Assistant Administrator for Water

William A. Whittington
Director
Office of Water Regulations and Standards

Devereaux Barnes, Acting Director
Industrial Technology Division

Ernst P. Hall, P.E., Chief
Metals Industries Branch

Janet K. Goodwin
Technical Project Officer

September 1986

U.S. Environmental Protection Agency
Office of Water
Office of Water Regulations and Standards
Industrial Technology Division
Washington, D.C. 20460

This document is divided into three volumes. Volume I contains Sections I through IV. Volume II contains Sections V and VI. Volume III contains Sections VII through XVI.

SECTION I	SUMMARY AND CONCLUSIONS
SECTION II	RECOMMENDATIONS
SECTION III	INTRODUCTION
SECTION IV	INDUSTRY SUBCATEGORIZATION
SECTION V	WATER USE AND WASTEWATER CHARACTERISTICS
SECTION VI	SELECTION OF POLLUTANT PARAMETERS
SECTION VII	CONTROL AND TREATMENT TECHNOLOGY
SECTION VIII	COST OF WASTEWATER TREATMENT AND CONTROL
SECTION IX	BEST PRACTICABLE CONTROL TECHNOLOGY CURRENTLY AVAILABLE
SECTION X	BEST AVAILABLE TECHNOLOGY ECONOMICALLY ACHIEVABLE
SECTION XI	NEW SOURCE PERFORMANCE STANDARDS
SECTION XII	PRETREATMENT STANDARDS
SECTION XIII	BEST CONVENTIONAL POLLUTANT CONTROL TECHNOLOGY
SECTION XIV	ACKNOWLEDGMENTS
SECTION XV	GLOSSARY
SECTION XVI	REFERENCES

CONTENTS

Section		Page
I	SUMMARY AND CONCLUSIONS Methodology Technology Basis for Limitations and Standards	1
II	RECOMMENDATIONS BPT and BAT Mass Limitations New Source Performance Standards Pretreatment Standards for Existing and New Sources	7
III	INTRODUCTION Legal Authority Data Collection and Utilization Description of the Nonferrous Metals Forming Category Description of Nonferrous Metals Forming Processes	319
IV	INDUSTRY SUBCATEGORIZATION Evaluation and Selection of Subcategorization Factors Production Normalizing Parameter Selection Description of Subcategories	385
V	WATER USE AND WASTEWATER CHARACTERISTICS Data Sources Water Use and Wastewater Characteristics	413
VI	SELECTION OF POLLUTANT PARAMETERS Rationale for Selection of Pollutant Parameters Description of Pollutant Parameters Pollutant Selection by Subcategory	1119
VII	CONTROL AND TREATMENT TECHNOLOGY End-of-Pipe Treatment Technologies Major Technologies Major Technology Effectiveness Minor Technologies In-Process Pollution Control Techniques	1311

CONTENTS (Continued)

Section		Page
VIII	COST OF WASTEWATER TREATMENT AND CONTROL Summary of Cost Estimates Cost Estimation Methodology Cost Estimates for Individual Treatment Technologies Compliance Cost Estimation Nonwater Quality Aspects	1461
IX	BEST PRACTICABLE CONTROL TECHNOLOGY CURRENTLY AVAILABLE Technical Approach to BPT Lead-Tin-Bismuth Forming Subcategory Magnesium Forming Subcategory Nickel-Cobalt Forming Subcategory Precious Metals Forming Subcategory Refractory Metals Forming Subcategory Titanium Forming Subcategory Uranium Forming Subcategory Zinc Forming Subcategory Zirconium Hafnium Forming Subcategory Metal Powders Subcategory Application of Regulation in Permits	1553
X	BEST AVAILABLE TECHNOLOGY ECONOMICALLY ACHIEVABLE Technical Approach to BAT BAT Option Selection Regulated Pollutant Parameters Lead-Tin-Bismuth Forming Subcategory Magnesium Forming Subcategory Nickel-Cobalt Forming Subcategory Precious Metals Forming Subcategory Refractory Metals Forming Subcategory Titanium Forming Subcategory Uranium Forming Subcategory Zinc Forming Subcategory Zirconium-Hafnium Forming Subcategory Metals Powders Subcategory	1757
XI	NEW SOURCE PERFORMANCE STANDARDS Technical Approach to NSPS NSPS Option Selection Regulated Pollutant Parameter New Source Performance Standards	1915

CONTENTS (Continued)

Section		Page
XII	PRETREATMENT STANDARDS Introduction of Nonferrous Metals Forming Wastewater into POTW Technical Approach to Pretreatment PSES and PSNS Option Selection Regulated Pollutant Parameters Pretreatment Standards	2013
XIII	BEST CONVENTIONAL POLLUTANT CONTROL TECHNOLOGY	2187
XIV	ACKNOWLEDGEMENTS	2189
XV	GLOSSARY	2191
XVI	REFERENCES	2211

LIST OF TABLES

Table	Title	Page
III-1	Metal Types Not Formed on a Commercial Scale, or for which Forming Operations Generate No Wastewater	356
III-2	Metal Types Covered Under the Nonferrous Metals Forming Category	357
III-3	Years Since Nonferrous Forming Operations Began at Plant	358
III-4	Nonferrous Metal Production by Product Formed in 1981	359
IV-1	Number of Plants Discharging Nonferrous Metals Forming Wastewater, By Subcategory	411
V-1	Number of Samples Per Waste Stream, By Subcategory	478
V-2	Sample Analysis Laboratories	483
V-3	Nonpriority Pollutants Analyzed for During Sampling Effort Supporting This Regulation	484
V-4	Results of Chemical Analyses of Sampled Lead and Nickel Extrusion Press and Solution Heat Treatment Contact Cooling Water	486
V-5	Results of Chemical Analyses of Sampled Lead, Nickel, and Precious Metals Rolling Spent Emulsions	487
V-6	Lead-Tin-Bismuth Rolling Spent Emulsions	488
V-7	Lead-Tin-Bismuth Rolling Spent Emulsions Raw Wastewater Sampling Data	489
V-8	Lead-Tin-Bismuth Rolling Spent Soap Solutions	492

LIST OF TABLES (Continued)

Table	Title	Page
V-9	Lead-Tin-Bismuth Rolling Spent Neat Oils	493
V-10	Lead-Tin-Bismuth Drawing Spent Emulsions	494
V-11	Lead-Tin-Bismuth Drawing Spent Soap Solutions	495
V-12	Lead-Tin-Bismuth Drawing Spent Soap Solutions Raw Wastewater Characteristics	496
V-13	Lead-Tin-Bismuth Extrusion Press or Solution Heat Treatment Contact Cooling Water	497
V-14	Lead-Tin-Bismuth Extrusion Press Solution Heat Treatment Contact Cooling Water Raw Wastewater Characteristics	498
V-15	Lead-Tin-Bismuth Extrusion Press Hydraulic Fluid Leakage	501
V-16	Lead-Tin-Bismuth Swaging Spent Emulsions	502
V-17	Lead-Tin-Bismuth Continuous Strip Casting Contact Cooling Water	503
V-18	Lead-Tin-Bismuth Continuous Strip Casting Contact Cooling Water Raw Wastewater Characteristics	504
V-19	Lead-Tin-Bismuth Semi-Continuous Ingot Casting Contact Cooling Water	506
V-20	Lead-Tin-Bismuth Semi-Continuous Ingot Casting Contact Cooling Water Raw Wastewater Characteristics	507
V-21	Lead-Tin-Bismuth Shot Casting Contact Cooling Water	510

LIST OF TABLES (Continued)

Table	Title	Page
V-22	Lead-Tin-Bismuth Shot Casting Contact Cooling Water Raw Wastewater	511
V-23	Lead-Tin-Bismuth Shot Forming Wet Air Pollution Control Blowdown	514
V-24	Lead-Tin-Bismuth Alkaline Cleaning Spent Baths	515
V-25	Lead-Tin-Bismuth Alkaline Cleaning Spent Baths Raw Wastewater Sampling Data	516
V-26	Lead-Tin-Bismuth Alkaline Cleaning Rinse	519
V-27	Lead-Tin-Bismuth Alkaline Cleaning Rinse Raw Wastewater Sampling Data	520
V-28	Magnesium Rolling Spent Emulsions	524
V-29	Magnesium Forging Spent Lubricants	525
V-30	Magnesium Forging Contact Cooling Water	526
V-31	Magnesium Forging Equipment Cleaning Wastewater	527
V-32	Magnesium Direct Chill Casting Contact Cooling Water	528
V-33	Magnesium Surface Treatment Spent Baths	529
V-34	Magnesium Surface Treatment Spent Baths Raw Wastewater Sampling Data	530
V-35	Magnesium Surface Treatment Rinse	535
V-36	Magnesium Surface Treatment Rinse Raw Wastewater Sampling Data	536

LIST OF TABLES (Continued)

Table	Title	Page
V-37	Magnesium Sawing or Grinding Spent Emulsions	548
V-38	Magnesium Wet Air Pollution Control Blowdown	549
V-39	Magnesium Wet Air Pollution Control Blowdown Raw Wastewater Sampling Data	550
V-40	Nickel-Cobalt Rolling Spent Neat Oils	552
V-41	Nickel-Cobalt Rolling Spent Emulsions	553
V-42	Nickel-Cobalt Rolling Spent Emulsions Raw Wastewater Sampling Data	554
V-43	Nickel-Cobalt Rolling Contact Cooling Water	558
V-44	Nickel-Cobalt Rolling Contact Cooling Water Raw Wastewater Sampling Data	559
V-45	Nickel-Cobalt Tube Reducing Spent Lubricants	566
V-46	Nickel-Cobalt Tube Reducing Spent Lubricants Raw Wastewater Sampling Data	567
V-47	Nickel-Cobalt Drawing Spent Neat Oils	570
V-48	Nickel-Cobalt Drawing Spent Emulsions	571
V-49	Nickel-Cobalt Drawing Spent Emulsions Raw Wastewater Sampling Data	572
V-50	Nickel-Cobalt Extrusion Spent Lubricants	574
V-51	Nickel-Cobalt Extrusion Press and Solution Heat Treatment Contact Cooling Water	575

LIST OF TABLES (Continued)

Table	Title	Page
V-52	Nickel-Cobalt Extrusion Press and Solution Heat Treatment Contact Cooling Water Raw Wastewater Sampling Data	576
V-53	Nickel-Cobalt Extrusion Press Hydraulic Fluid Leakage	579
V-54	Nickel-Cobalt Extrusion Press Hydraulic Fluid Leakage Raw Wastewater Sampling Data	580
V-55	Nickel-Cobalt Forging Spent Lubricants	584
V-56	Nickel-Cobalt Forging Contact Cooling Water	585
V-57	Nickel-Cobalt Forging Contact Cooling Water Raw Wastewater Sampling Data	586
V-58	Nickel-Cobalt Forging Equipment Cleaning Wastewater	590
V-59	Nickel-Cobalt Forging Press Hydraulic Fluid Leakage	591
V-60	Nickel-Cobalt Forging Press Hydraulic Fluid Leakage Raw Wastewater Sampling Data	592
V-61	Nickel-Cobalt Metal Powder Production Atomization Wastewater	595
V-62	Nickel-Cobalt Metal Powder Production Atomization Wastewater Raw Wastewater Sampling Data	596
V-63	Nickel-Cobalt Stationary Casting Contact Cooling Water	601
V-64	Nickel-Cobalt Vacuum Melting Steam Condensate	602

LIST OF TABLES (Continued)

Table	Title	Page
V-65	Nickel-Cobalt Vacuum Melting Steam Condensate Raw Wastewater Sampling Data	603
V-66	Nickel-Cobalt Annealing and Solution Heat Treatment Contact Cooling Water	606
V-67	Nickel-Cobalt Annealing and Solution Heat Treatment Contact Cooling Water Raw Wastewater Sampling Data	607
V-68	Nickel-Cobalt Surface Treatment Spent Baths	611
V-69	Nickel-Cobalt Surface Treatment Spent Baths Raw Wastewater Sampling Data	612
V-70	Nickel-Cobalt Surface Treatment Rinse	620
V-71	Nickel-Cobalt Surface Treatment Rinse Raw Wastewater Sampling Data	621
V-72	Nickel-Cobalt Ammonia Rinse	635
V-73	Nickel-Cobalt Ammonia Rinse Raw Wastewater Sampling Data	636
V-74	Nickel-Cobalt Alkaline Cleaning Spent Baths	639
V-75	Nickel-Cobalt Alkaline Cleaning Spent Baths Raw Wastewater Sampling Data	640
V-76	Nickel-Cobalt Alkaline Cleaning Rinse	646
V-77	Nickel-Cobalt Alkaline Cleaning Rinse Raw Wastewater Sampling Data	647
V-78	Nickel-Cobalt Molten Salt Rinse	654
V-79	Nickel-Cobalt Molten Salt Rinse Raw Wastewater Sampling Data	655

LIST OF TABLES (Continued)

Table	Title	Page
V-80	Nickel-Cobalt Sawing or Grinding Spent Emulsions	661
V-81	Nickel-Cobalt Sawing or Grinding Spent Emulsions Raw Wastewater Sampling Data	662
V-82	Nickel-Cobalt Sawing or Grinding Rinse	685
V-83	Nickel-Cobalt Steam Cleaning Condensate	686
V-84	Nickel-Cobalt Hydrostatic Tube Testing and Ultrasonic Testing Wastewater	687
V-85	Nickel-Cobalt Dye Penetrant Testing Wastewater	688
V-86	Nickel-Cobalt Dye Penetrant Testing Wastewater Raw Wastewater Sampling Data	689
V-87	Nickel-Cobalt Wet Air Pollution Control Blowdown	691
V-88	Nickel-Cobalt Wet Air Pollution Control Blowdown Raw Wastewater Sampling Data	692
V-89	Nickel-Cobalt Electrocoating Rinse	697
V-90	Precious Metals Rolling Spent Neat Oils	698
V-91	Precious Metals Rolling Spent Emulsions	699
V-92	Precious Metals Rolling Spent Emulsions Raw Wastewater Sampling Data	700
V-93	Precious Metals Drawing Spent Neat Oils	705
V-94	Precious Metals Drawing Spent Emulsions	706

LIST OF TABLES (Continued)

Table	Title	Page
V-95	Precious Metals Drawing Spent Emulsions Raw Wastewater Sampling Data	707
V-96	Precious Metals Drawing Spent Soap Solutions	710
V-97	Precious Metals Metal Powder Production Atomization Wastewater	711
V-98	Precious Metals Direct Chill Casting Contact Cooling	712
V-99	Precious Metals Shot Casting Contact Cooling Water	713
V-100	Precious Metals Shot Casting Contact Cooling Water Raw Wastewater Sampling Data	714
V-101	Precious Metals Stationary Casting Contact Cooling Water	717
V-102	Precious Metals Semi-Continuous and Continuous Casting Contact Cooling Water	718
V-103	Precious Metals Semi-Continuous and Continuous Casting Contact Cooling Water Raw Wastewater Sampling Data	719
V-104	Precious Metals Heat Treatment Contact Cooling Water	723
V-105	Precious Metals Surface Treatment Spent Baths	724
V-106	Precious Metals Surface Treatment Rinse	725
V-107	Precious Metals Surface Treatment Rinse Raw Wastewater Sampling Data	726
V-108	Precious Metals Alkaline Cleaning Spent Baths	732

LIST OF TABLES (Continued)

Table	Title	Page
V-109	Precious Metals Alkaline Cleaning Rinse	733
V-110	Precious Metals Alkaline Cleaning Prebonding Wastewater	734
V-111	Precious Metals Alkaline Cleaning Prebonding Wastewater Raw Wastewater Sampling Data	735
V-112	Precious Metals Tumbling or Burnishing Wastewater	740
V-113	Precious Metals Tumbling or Burnishing Wastewater Raw Wastewater Sampling Data	741
V-114	Precious Metals Sawing or Grinding Spent Neat Oils	745
V-115	Precious Metals Sawing or Grinding Spent Emulsions	746
V-116	Precious Metals Sawing or Grinding Spent Emulsions Raw Wastewater Sampling Data	747
V-117	Precious Metals Pressure Bonding Contact Cooling Water	750
V-118	Precious Metals Pressure Bonding Contact Cooling Water Raw Wastewater Sampling Data	751
V-119	Precious Metals Wet Air Pollution Control Blowdown	754
V-120	Refractory Metals Rolling Spent Neat Oils and Graphite-Based Lubricants	755
V-121	Refractory Metals Rolling Spent Emulsions	756
V-122	Refractory Metals Drawing Spent Lubricants	757
V-123	Refractory Metals Extrusion Spent Lubricants	758

LIST OF TABLES (Continued)

Table	Title	Page
V-124	Refractory Metals Extrusion Press Hydraulic Fluid Leakage	759
V-125	Refractory Metals Extrusion Press Hydraulic Fluid Leakage Raw Wastewater Sampling Data	760
V-126	Refractory Metals Forging Spent Lubricants	762
V-127	Refractory Metals Forging Contact Cooling Water	763
V-128	Refractory Metals Metal Powder Production Wastewater	764
V-129	Refractory Metals Metal Powder Production Floor Wash Wastewater	765
V-130	Refractory Metals Metal Powder Pressing Spent Lubricants	766
V-131	Refractory Metals Surface Treatment Spent Baths	767
V-132	Refractory Metals Surface Treatment Spent Baths Raw Wastewater Sampling Data	768
V-133	Refractory Metals Surface Treatment Rinse	771
V-134	Refractory Metals Surface Treatment Rinse Raw Wastewater Sampling Data	772
V-135	Refractory Metals Alkaline Cleaning Spent Baths	778
V-136	Refractory Metals Alkaline Cleaning Spent Baths Raw Wastewater Sampling Data	779
V-137	Refractory Metals Alkaline Cleaning Rinse	781
V-138	Refractory Metals Molten Salt Rinse	782
V-139	Refractory Metals Molten Salt Rinse Raw Wastewater Sampling Data	783

LIST OF TABLES (Continued)

Table	Title	Page
V-140	Refractory Metals Tumbling or Burnishing Wastewater	789
V-141	Refractory Metals Tumbling or Burnishing Wastewater Raw Wastewater Sampling Data	790
V-142	Refractory Metals Sawing or Grinding Spent Neat Oils	796
V-143	Refractory Metals Sawing or Grinding Spent Emulsions	797
V-144	Refractory Metals Sawing or Grinding Spent Emulsions Raw Wastewater Sampling Data	798
V-145	Refractory Metals Sawing or Grinding Contact Cooling Water	800
V-146	Refractory Metals Sawing or Grinding Contact Cooling Water Raw Wastewater Sampling Data	801
V-147	Refractory Metals Sawing or Grinding Rinse	805
V-148	Refractory Metals Dye Penetrant Testing Wastewater	806
V-149	Refractory Metals Dye Penetrant Testing Wastewater Raw Wastewater Sampling Data	807
V-150	Refractory Metals Equipment Cleaning Wastewater	810
V-151	Refractory Metals Equipment Cleaning Wastewater Raw Wastewater Sampling Data	811
V-152	Refractory Metals Miscellaneous Wastewater Sources	813
V-153	Refractory Metals Wet Air Pollution Control Blowdown	814

LIST OF TABLES (Continued)

Table	Title	Page
V-154	Refractory Metals Wet Air Pollution Control Blowdown Raw Wastewater Sampling Data	815
V-155	Titanium Rolling Spent Neat Oils	819
V-156	Titanium Rolling Contact Cooling Water	820
V-157	Titanium Drawing Spent Neat Oils	821
V-158	Titanium Extrusion Spent Neat Oils	822
V-159	Titanium Extrusion Spent Emulsions	823
V-160	Titanium Extrusion Press Hydraulic Fluid Leakage	824
V-161	Titanium Extrusion Press Hydraulic Fluid Leakage Raw Wastewater Sampling Data	825
V-162	Titanium Forging Spent Lubricants	826
V-163	Titanium Forging Contact Cooling Water	827
V-164	Titanium Forging Equipment Cleaning Wastewater	828
V-165	Titanium Forging Press Hydraulic Fluid Leakage	829
V-166	Titanium Tube Reducing Spent Lubricants	830
V-167	Titanium Tube Reducing Spent Lubricants Raw Wastewater Sampling Data	831
V-168	Titanium Heat Treatment Contact Cooling Water	832
V-169	Titanium Heat Treatment Contact Cooling Water Raw Wastewater Sampling Data	833
V-170	Titanium Surface Treatment Spent Baths	836

LIST OF TABLES (Continued)

Table	Title	Page
V-171	Titanium Surface Treatment Spent Baths Raw Wastewater Sampling Data	837
V-172	Titanium Surface Treatment Rinse	841
V-173	Titanium Surface Treatment Rinse Raw Wastewater Sampling Data	842
V-174	Titanium Alkaline Cleaning Spent Baths	847
V-175	Titanium Alkaline Cleaning Spent Baths Raw Wastewater Sampling Data	848
V-176	Titanium Alkaline Cleaning Rinse	850
V-177	Titanium Alkaline Cleaning Rinse Raw Wastewater Sampling Data	851
V-178	Titanium Molten Salt Rinse	853
V-179	Titanium Tumbling Wastewater	854
V-180	Titanium Tumbling Wastewater Raw Wastewater Sampling Data	855
V-181	Titanium Sawing or Grinding Spent Neat Oils	858
V-182	Titanium Sawing or Grinding Spent Emulsions	859
V-183	Titanium Sawing or Grinding Spent Emulsions Raw Wastewater Sampling Data	860
V-184	Titanium Sawing or Grinding Contact Cooling Water	865
V-185	Titanium Sawing or Grinding Contact Cooling Water Raw Wastewater Sampling Data	866
V-186	Titanium Dye Penetrant Testing Wastewater	867

LIST OF TABLES (Continued)

Table	Title	Page
V-187	Titanium Hydrotesting Wastewater	868
V-188	Titanium Wet Air Pollution Control Blowdown	869
V-189	Titanium Wet Air Pollution Control Blowdown Raw Wastewater Sampling Data	870
V-190	Uranium Extrusion Spent Lubricants	873
V-191	Uranium Extrusion Tool Contact Cooling Water	874
V-192	Uranium Forging Spent Lubricants	875
V-193	Uranium Heat Treatment Contact Cooling Water	876
V-194	Uranium Heat Treatment Contact Cooling Water Raw Wastewater Sampling Data	877
V-195	Uranium Surface Treatment Spent Baths	884
V-196	Uranium Surface Treatment Spent Baths Raw Wastewater Sampling Data	885
V-197	Uranium Surface Treatment Rinse	888
V-198	Uranium Surface Treatment Rinse Raw Wastewater Sampling Data	889
V-199	Uranium Sawing or Grinding Spent Emulsions	894
V-200	Uranium Sawing or Grinding Spent Emulsions Raw Wastewater Sampling Data	895
V-201	Uranium Sawing or Grinding Contact Cooling Water	898
V-202	Uranium Sawing or Grinding Rinse	899
V-203	Uranium Area Cleaning Washwater	900

LIST OF TABLES (Continued)

Table	Title	Page
V-204	Uranium Area Cleaning Washwater Raw Wastewater Sampling Data	901
V-205	Uranium Wet Air Pollution Control Blowdown	908
V-206	Uranium Wet Air Pollution Control Blowdown Raw Wastewater Sampling Data	909
V-207	Uranium Drum Washwater	911
V-208	Uranium Drum Washwater Raw Wastewater Sampling Data	913
V-209	Uranium Laundry Washwater	917
V-210	Uranium Laundry Washwater Raw Wastewater Sampling Data	918
V-211	Zinc Rolling Spent Neat Oils	921
V-212	Zinc Rolling Spent Emulsions	922
V-213	Zinc Rolling Contact Cooling Water	923
V-214	Zinc Drawing Spent Emulsions	924
V-215	Zinc Direct Chill Casting Contact Cooling Water	925
V-216	Zinc Stationary Casting Contact Cooling Water	926
V-217	Zinc Heat Treatment Contact Cooling Water	927
V-218	Zinc Surface Treatment Spent Baths	928
V-219	Zinc Surface Treatment Rinse	929
V-220	Zinc Surface Treatment Rinse Raw Wastewater Sampling Data	930

LIST OF TABLES (Continued)

Table	Title	Page
V-221	Zinc Alkaline Cleaning Spent Baths	935
V-222	Zinc Alkaline Cleaning Rinse	936
V-223	Zinc Alkaline Cleaning Rinse Raw Wastewater Sampling Data	937
V-224	Zinc Sawing or Grinding Spent Emulsions	942
V-225	Zinc Electrocoating Rinse	943
V-226	Zirconium-Hafnium Rolling Spent Neat Oils	944
V-227	Zirconium-Hafnium Drawing Spent Lubricants	945
V-228	Zirconium-Hafnium Extrusion Spent Lubricants	946
V-229	Zirconium-Hafnium Extrusion Press Hydraulic Fluid Leakage	947
V-230	Zirconium-Hafnium Extrusion Press Hydraulic Fluid Leakage Raw Wastewater Sampling Data	948
V-231	Zirconium-Hafnium Swaging Spent Neat Oils	949
V-232	Zirconium-Hafnium Tube Reducing Spent Lubricants	950
V-233	Zirconium-Hafnium Heat Treatment Contact Cooling Water	951
V-234	Zirconium-Hafnium Heat Treatment Contact Cooling Water Raw Wastewater Sampling Data	952
V-235	Zirconium-Hafnium Surface Treatment Spent Baths	955
V-236	Zirconium-Hafnium Surface Treatment Spent Baths Raw Wastewater Sampling Data	956

LIST OF TABLES (Continued)

Table	Title	Page
V-237	Zirconium-Hafnium Surface Treatment Rinse	962
V-238	Zirconium-Hafnium Alkaline Cleaning Spent Baths	963
V-239	Zirconium-Hafnium Alkaline Cleaning Rinse	964
V-240	Zirconium-Hafnium Molten Salt Rinse	965
V-241	Zirconium-Hafnium Sawing or Grinding Spent Neat Oils	966
V-242	Zirconium-Hafnium Sawing or Grinding Spent Emulsions	967
V-243	Zirconium-Hafnium Sawing or Grinding Contact Cooling Water	968
V-244	Zirconium-Hafnium Sawing or Grinding Rinse	969
V-245	Zirconium-Hafnium Inspection and Testing Wastewater	970
V-246	Zirconium-Hafnium Inspection and Testing Wastewater Raw Wastewater Sampling Data	971
V-247	Zirconium-Hafnium Degreasing Spent Solvents	974
V-248	Zirconium-Hafnium Degreasing Rinse	975
V-249	Zirconium-Hafnium Wet Air Pollution Control Blowdown	976
V-250	Metal Powders Metal Powder Production Atomization Wastewater	977
V-251	Metal Powders Metal Powder Production Atomization Wastewater Raw Wastewater Sampling Data	978
V-252	Metal Powders Tumbling, Burnishing or Cleaning Wastewater	980

LIST OF TABLES (Continued)

Table	Title	Page
V-253	Metal Powders Tumbling, Burnishing or Cleaning Wastewater Raw Wastewater Sampling Data	982
V-254	Metal Powders Sawing or Grinding Spent Neat Oils	987
V-255	Metal Powders Sawing or Grinding Spent Emulsions	988
V-256	Metal Powders Sawing or Grinding Spent Emulsions Raw Wastewater Sampling Data	989
V-257	Metal Powders Sawing or Grinding Contact Cooling Water	993
V-258	Metal Powders Sawing or Grinding Contact Cooling Water Raw Wastewater Sampling Data	994
V-259	Metal Powders Sizing Spent Neat Oils	995
V-260	Metal Powders Sizing Spent Emulsions	996
V-261	Metal Powders Steam Treatment Wet Air Pollution Control Blowdown	997
V-262	Metal Powders Steam Treatment Wet Air Pollution Control Blowdown Raw Wastewater Sampling Data	998
V-263	Metal Powders Oil-Resin Impregnation Spent Neat Oils	1001
V-264	Metal Powders Hot Pressing Contact Cooling Water	1002
V-265	Metal Powders Hot Pressing Contact Cooling Water Raw Wastewater Sampling Data	1003
V-266	Metal Powders Mixing Wet Air Pollution Control Blowdown	1004

LIST OF TABLES (Continued)

Table	Title	Page
V-267	Metal Powders Mixing Wet Air Pollution Control Blowdown Raw Wastewater Sampling Data	1005
V-268	Wastewater Treatment Performance Data - Plant A	1006
V-269	Wastewater Treatment Performance Data - Plant B	1009
V-270	Wastewater Treatment Performance Data - Plant D	1013
V-271	Wastewater Treatment Performance Data - Plant E	1017
V-272	Wastewater Treatment Performance Data - Plant F	1025
V-273	Wastewater Treatment Performance Data - Plant I	1032
V-274	Wastewater Treatment Performance Data - Plant J	1038
V-275	Wastewater Treatment Performance Data - Plant M	1041
V-276	Wastewater Treatment Performance Data - Plant Q	1051
V-277	Wastewater Treatment Performance Data - Plant R	1060
V-278	Wastewater Treatment Performance Data - Plant S	1062
V-279	Wastewater Treatment Performance Data - Plant T	1064
V-280	Wastewater Treatment Performance Data - Plant U	1065
V-281	Wastewater Treatment Performance Data - Plant V	1072
V-282	Wastewater Treatment Performance Data - Plant W	1080

LIST OF TABLES (Continued)

Table	Title	Page
V-283	Wastewater Treatment Performance Data - Plant X	1084
V-284	Wastewater Treatment Performance Data - Plant Y	1089
V-285	Wastewater Treatment Performance Data - Plant Z	1094
VI-1	List of 129 Priority Pollutants	1245
VI-2	Analytical Quantification and Treatment Effectiveness Values	1251
VI-3	Priority Pollutant Disposition Lead-Tin-Bismuth Forming Subcategory	1255
VI-4	Priority Pollutant Disposition Magnesium Forming Subcategory	1259
VI-5	Priority Pollutant Disposition Nickel-Cobalt Forming Subcategory	1263
VI-6	Priority Pollutant Disposition Precious Metals Forming Subcategory	1273
VI-7	Priority Pollutant Disposition Refractory Metals Forming Subcategory	1280
VI-8	Priority Pollutant Disposition Titanium Forming Subcategory	1287
VI-9	Priority Pollutant Disposition Uranium Forming Subcategory	1294
VI-10	Priority Pollutant Disposition Zinc Forming Subcategory	1298
VI-11	Priority Pollutant Disposition Zirconium-Hafnium Forming Subcategory	1302
VI-12	Priority Pollutant Disposition Metal Powders Subcategory	1306

LIST OF TABLES (Continued)

Table	Title	Page
VII-1	pH Control Effect on Metals Removal	1400
VII-2	Effectiveness of Sodium Hydroxide for Metals Removal	1400
VII-3	Effectiveness of Lime and Sodium Hydroxide for Metals Removal	1401
VII-4	Theoretical Solubilities of Hydroxides and Sulfide of Selected Metals in Pure Water	1401
VII-5	Sampling Data From Sulfide Precipitation-Sedimentation Systems	1402
VIII-6	Sulfide Precipitation-Sedimentation Performance	1403
VII-7	Ferrite Co-Precipitation Performance	1404
VII-8	Concentration of Total Cyanide	1404
VII-9	Multimedia Filter Performance	1405
VII-10	Performance of Selected Settling Systems	1405
VII-11	Skimming Performance	1406
VII-12	Selected Partition Coefficients	1407
VII-13	Trace Organic Removal by Skimming	1408
VII-14	Combined Metals Data Effluent Values	1408
VII-15	L & S Performance Additional Pollutants	1409
VII-16	Combined Metals Data Set - Untreated Wastewater	1409
VII-17	Maximum Pollutant Level in Untreated Wastewater Additional Pollutants	1410

LIST OF TABLES (Continued)

Table	Title	Page
VII-18	Precipitation-Settling-Filtration (LS&F) Performance Plant A	1411
VII-19	Precipitation-Settling-Filtration (LS&F) Performance Plant B	1412
VII-20	Precipitation-Settling-Filtration (LS&F) Performance Plant C	1413
VII-21	Summary of Treatment Effectiveness	1414
VII-22	Summary of Treatment Effectiveness for Selected Nonconventional Pollutants	1415
VII-23	Treatability Rating of Priority Pollutants	1416
VII-24	Classes of Organic Compounds Adsorbed on Carbon	1417
VII-25	Activated Carbon Performance (Mercury)	1418
VII-26	Ion Exchange Performance	1418
VII-27	Membrane Filtration System Effluent	1419
VII-28	Peat Adsorption Performance	1419
VII-29	Ultrafiltration Performance	1420
VII-30	Chemical Emulsion Breaking Efficiencies	1421
VIII-1	BPT Costs of Compliance for the Nonferrous Metals Forming Category	1508
VIII-2	BAT Costs of Compliance for the Nonferrous Metals Forming Category	1509
VIII-3	PSES Costs of Compliance for the Nonferrous Metals Forming Category	1510

LIST OF TABLES (Continued)

Table	Title	Page
VIII-4	Nonferrous Metals Forming Category Cost Equations for Recommended Treatment and Control Technologies	1511
VIII-5	Components of Total Capital Investment	1518
VIII-6	Components of Total Annualized Investment	1519
VIII-7	Wastewater Sampling Frequency	1520
VIII-8	Pollutant Parameter Important to Treatment System Design	1521
VIII-9	Sludge to Influent Flow Ratios	1522
VIII-10	Key to Cost Curves and Equations	1523
VIII-11	Cost Equations Used in Cost Curve Method	1524
VIII-12	Number of Plants for Which Costs Were Scaled From Similar Plants	1525
VIII-13	Flow Reduction Recycle Ratio and Association Cost Assumptions	1526
VIII-14	Segregation Cost Basis	1528
VIII-15	Nonferrous Metals Forming Solid Waste Generation	1529
VIII-16	Nonferrous Metals Forming Energy Consumption	1530
IX-1	Potential Preliminary Treatment Requirements Lead-Tin-Bismuth Forming Subcategory	1626
IX-2	Potential Preliminary Treatment Requirements Magnesium Forming Subcategory	1627

LIST OF TABLES (Continued)

Table	Title	Page
IX-3	Potential Preliminary Treatment Requirements Nickel-Cobalt Forming Subcategory	1628
IX-4	Potential Preliminary Treatment Requirements Precious Metals Forming Subcategory	1630
IX-5	Potential Preliminary Treatment Requirements Refractory Metals Forming Subcategory	1631
IX-6	Potential Preliminary Treatment Requirements Titanium Forming Subcategory	1633
IX-7	Potential Preliminary Treatment Requirements Uranium Forming Subcategory	1635
IX-8	Potential Preliminary Treatment Requirements Zinc Forming Subcategory	1636
IX-9	Potential Preliminary Treatment Requirements Zirconium-Hafnium Forming Subcategory	1637
IX-10	Potential Preliminary Treatment Requirements Metal Powders Subcategory	1638
IX-11	BPT Regulatory Flows for Production Operations - Lead-Tin-Bismuth Forming Subcategory	1639
IX-12	Lead-Tin-Bismuth Forming Subcategory BPT Effluent Limitations	1641
IX-13	BPT Regulatory Flows for Production Operations - Magnesium Forming Subcategory	1648
IX-14	Magnesium Forming Subcategory BPT Effluent Limitations	1649

LIST OF TABLES (Continued)

Table	Title	Page
IX-15	BPT Regulatory Flows for Production Operations - Nickel-Cobalt Forming Subcategory	1653
IX-16	Nickel-Cobalt Forming Subcategory BPT Effluent Limitations	1656
IX-17	BPT Regulatory Flows for Production Operations - Precious Metals Forming Subcategory	1670
IX-18	Precious Metals Forming Subcategory BPT Effluent Limitations	1672
IX-19	BPT Regulatory Flows for Production Operations - Refractory Metals Forming Subcategory	1682
IX-20	Refractory Metals Forming Subcategory BPT Effluent Limitations	1684
IX-21	BPT Regulatory Flows for Production Operations - Titanium Forming Subcategory	1701
IX-22	Titanium Forming Subcategory BPT Effluent Limitations	1703
IX-23	BPT Regulatory Flows for Production Operations - Uranium Forming	1715
IX-24	Uranium Forming Subcategory BPT Effluent Limitations	1717
IX-25	BPT Regulatory Flows for Production Operations - Zinc Forming Subcategory	1724
IX-26	Zinc Forming Subcategory BPT Effluent Limitations	1725
IX-27	BPT Regulatory Flows for Production Operations - Zirconium-Hafnium Forming Subcategory	1731
IX-28	Zirconium-Hafnium Forming Subcategory BPT Effluent Limitations	1733

LIST OF TABLES (Continued)

Table	Title	Page
IX-29	BPT Regulatory Flows for Production Operations - Metal Powders Subcategory	1741
IX-30	Metal Powders Subcategory BPT Effluent Limitations	1742
IX-31	Allowable Discharge Calculations for Refractory Metals Forming Plant X in Example 1 (Nickel)	1748
IX-32	Allowable Discharge Calculations for Lead-Tin-Bismuth Forming Plant Y in Example 2 (Total Suspended Solids)	1749
IX-33	Allowable Discharge Calculations for Nickel-Cobalt and Titanium Forming Plant Z in Example 3 (Nickel)	1751
IX-34	Allowable Discharge Calculations for Nickel-Cobalt and Titanium Forming Plant Z in Example 3 (Cyanide)	1753
X-1	Capital and Annual Cost Estimates for BAT (PSES) Total Subcategory	1794
X-2	Capital and Annual Cost Estimates for BAT Direct Dischargers	1795
X-3	Nonferrous Metals Forming Pollutant Reduction Benefit Estimates Lead-Tin-Bismuth Forming Subcategory Total Subcategory	1796
X-4	Nonferrous Metals Forming Pollutant Reduction Benefit Estimates Magnesium Forming Subcategory Total Subcategory	1797
X-5	Nonferrous Metals Forming Pollutant Reduction Benefit Estimates Nickel-Cobalt Forming Subcategory Total Subcategory	1798

LIST OF TABLES (Continued)

Table	Title	Page
X-6	Nonferrous Metals Forming Pollutant Reduction Benefit Estimates Precious Metals Forming Subcategory Total Subcategory	1799
X-7	Nonferrous Metals Forming Pollutant Reduction Benefit Estimates Refractory Metals Forming Subcategory Total Subcategory	1800
X-8	Nonferrous Metals Forming Pollutant Reduction Benefit Estimates Titanium Forming Subcategory Total Subcategory	1801
X-9	Nonferrous Metals Forming Pollutant Reduction Benefit Estimates Uranium Forming Subcategory Total Subcategory	1802
X-10	Nonferrous Metals Forming Pollutant Reduction Benefit Estimates Zinc Forming Subcategory Total Subcategory	1803
X-11	Nonferrous Metals Forming Pollutant Reduction Benefit Estimates Zirconium-Hafnium Forming Subcategory Total Subcategory	1804
X-12	Nonferrous Metals Forming Pollutant Reduction Benefit Estimates Metal Powders Subcategory Total Subcategory	1805
X-13	Nonferrous Metals Forming Pollutant Reduction Benefit Estimates Lead-Tin-Bismuth Forming Subcategory Direct Dischargers	1806
X-14	Nonferrous Metals Forming Pollutant Reduction Benefit Estimates Magnesium Forming Subcategory Direct Dischargers	1807

LIST OF TABLES (Continued)

Table	Title	Page
X-15	Nonferrous Metals Forming Pollutant Reduction Benefit Estimates Nickel-Cobalt Forming Subcategory Direct Dischargers	1808
X-16	Nonferrous Metals Forming Pollutant Reduction Benefit Estimates Precious Metals Forming Subcategory Direct Dischargers	1809
X-17	Nonferrous Metals Forming Pollutant Reduction Benefit Estimates Refractory Metals Forming Subcategory Direct Dischargers	1810
X-18	Nonferrous Metals Forming Pollutant Reduction Benefit Estimates Titanium Forming Subcategory Direct Dischargers	1811
X-19	Nonferrous Metals Forming Pollutant Reduction Benefit Estimates Uranium Forming Subcategory Direct Dischargers	1812
X-20	Nonferrous Metals Forming Pollutant Reduction Benefit Estimates Zinc Forming Subcategory	1813
X-21	Nonferrous Metals Forming Pollutant Reduction Estimates Zirconium-Hafnium Forming Direct Dischargers	1814
X-22	Nonferrous Metals Forming Pollutant Reduction Estimates Metal Powders Subcategory Direct Dischargers	1815
X-23	Options Selected as the Technology Basis for BAT	1816
X-24	BAT Regulatory Flows for the Production Operations - Lead-Tin-Bismuth Forming Subcategory	1817

LIST OF TABLES (Continued)

Table	Title	Page
X-25	Lead-Tin-Bismuth Forming Subcategory BAT Effluent Limitations	1819
X-26	BAT Regulatory Flows for the Production Operations - Magnesium Forming Subcategory	1824
X-27	Magnesium Forming Subcategory BAT Effluent Limitations	1825
X-28	BAT Regulatory Flows for the Production Operations - Nickel-Cobalt Forming Subcategory	1829
X-29	Nickel-Cobalt Forming Subcategory BAT Effluent Limitations	1832
X-30	BAT Regulatory Flows for the Production Operations - Precious Metal Forming Subcategory	1845
X-31	Precious Metals Forming Subcategory BAT Effluent Limitations	1847
X-32	BAT Regulatory Flows for the Production Operations - Refractory Metals Forming Subcategory	1856
X-33	Refractory Metals Forming Subcategory BAT Effluent Limitations	1858
X-34	BAT Regulatory Flows for the Production Operations - Titanium Forming Subcategory	1869
X-35	Titanium Forming Subcategory BAT Effluent Limitations	1871
X-36	BAT Regulatory Flows for the Production Operations - Uranium Forming Subcategory	1882

LIST OF TABLES (Continued)

Table	Title	Page
X-37	Uranium Forming Subcategory BAT Effluent Limitations	1884
X-38	BAT Regulatory Flows for the Production Operations - Zinc Forming Subcategory	1889
X-39	Zinc Forming Subcategory BAT Effluent Limitations	1890
X-40	BAT Regulatory Flows for the Production Operations - Zirconium-Hafnium Forming Subcategory	1896
X-41	Zirconium-Hafnium Forming Subcategory BAT Effluent Limitations	1898
X-42	BAT Regulatory Flows for the Production Operations - Metal Powders Subcategory	1906
X-43	Metal Powders Subcategory BAT Effluent Limitations	1907
XI-1	Options Selected as the Bases for NSPS	1919
XI-2	Lead-Tin-Bismuth Forming Subcategory New Source Performance Standards	1920
XI-3	Magnesium Forming Subcategory New Source Performance Standards	1927
XI-4	Nickel-Cobalt Forming Subcategory New Source Performance Standards	1931
XI-5	Precious Metals Forming Subcategory New Source Performance Standards	1946
XI-6	Refractory Metals Forming Subcategory New Source Performance Standards	1956
XI-7	Titanium Forming Subcategory New Source Performance Standards	1973

LIST OF TABLES (Continued)

Table	Title	Page
XI-8	Uranium Forming Subcategory New Source Performance Standards	1986
XI-9	Zinc Forming Subcategory New Source Performance Standards	1993
XI-10	Zirconium-Hafnium Forming Subcategory New Source Performance Standards	1999
XI-11	Metal Powders Subcategory New Source Performance Standards	2006
XII-1	POTW Removals of the Toxic Pollutants Found in Nonferrous Metals Forming Wastewater	2019
XII-2	Pollutant Removal Percentages for BAT or PSES Model Technology By Subcategory	2021
XII-3	Option Selected as the Model Technology Basis for PSES and PSNS	2022
XII-4	Capital and Annual Cost Estimates for PSES Options Indirect Dischargers	2023
XII-5	Nonferrous Metals Forming Pollutant Reduction Benefit Estimates Lead-Tin-Bismuth Forming Subcategory Indirect Dischargers	2025
XII-6	Nonferrous Metals Forming Pollutant Reduction Benefit Estimates Magnesium Forming Subcategory Indirect Dischargers	2026
XII-7	Nonferrous Metals Forming Pollutant Reduction Benefit Estimates Nickel-Cobalt Forming Subcategory Indirect Dischargers	2027

LIST OF TABLES (Continued)

Table	Title	Page
XII-8	Nonferrous Metals Forming Pollutant Reduction Benefit Estimates Precious Metals Forming Subcategory Indirect Dischargers	2028
XII-9	Nonferrous Metals Forming Pollutant Reduction Benefit Estimates Refractory Metals Forming Subcategory Indirect Dischargers	2029
XII-10	Nonferrous Metals Forming Pollutant Reduction Benefit Estimates Titanium Forming Subcategory Indirect Dischargers	2030
XII-11	Nonferrous Metals Forming Pollutant Reduction Benefit Estimates Zirconium-Hafnium Forming Subcategory Indirect Dischargers	2031
XII-12	Nonferrous Metals Forming Pollutant Reduction Benefit Estimates Metal Powders Subcategory Indirect Dischargers	2032
XII-13	Lead-Tin-Bismuth Forming Subcategory Pretreatment Standards for Existing Sources	2033
XII-14	Magnesium Forming Subcategory Pretreatment Standards for Existing Sources	2038
XII-15	Nickel-Cobalt Forming Subcategory Pretreatment Standards for Existing Sources	2042
XII-16	Precious Metals Forming Subcategory Pretreatment Standards for Existing Sources	2055
XII-17	Refractory Metals Forming Subcategory Pretreatment Standards for Existing Sources	2064

LIST OF TABLES (Continued)

Table	Title	Page
XII-18	Titanium Forming Subcategory Pretreatment Standards for Existing Sources	2075
XII-19	Uranium Forming Subcategory Pretreatment Standards for Existing Sources	2085
XII-20	Zinc Forming Subcategory Pretreatment Standards for Existing Sources	2091
XII-21	Zirconium-Hafnium Forming Subcategory Pretreatment Standards for Existing Sources	2097
XII-22	Metal Powders Subcategory Pretreatment Standards for Existing Sources	2105
XII-23	Lead-Tin-Bismuth Forming Subcategory Pretreatment Standards for New Sources	2110
XII-24	Magnesium Forming Subcategory Pretreatment Standards for New Sources	2115
XII-25	Nickel-Cobalt Forming Subcategory Pretreatment Standards for New Sources	2119
XII-26	Precious Metals Forming Subcategory Pretreatment Standards for New Sources	2132
XII-27	Refractory Metals Forming Subcategory Pretreatment Standards for New Sources	2141
XII-28	Titanium Forming Subcategory Pretreatment Standards for New Sources	2152

LIST OF TABLES (Continued)

Table	Title	Page
XII-29	Uranium Forming Subcategory Pretreatment Standards for New Sources	2162
XII-30	Zinc Forming Subcategory Pretreatment Standards for New Sources	2168
XII-31	Zirconium-Hafnium Forming Subcategory Pretreatment Standards for New Sources	2174
XII-32	Metal Powders Subcategory Pretreatment Standards for New Sources	2182

LIST OF FIGURES

Figure	Title	Page
III-1	Geographical Distribution of Nonferrous Forming Plants	360
III-2	Sequence of Nonferrous Metals Forming Operations	361
III-3	Common Rolling Mill Configurations	362
III-4	Reversing Hot Strip Mill	363
III-5	4-High Cold Rolling Mill	364
III-6	Tube Drawing	365
III-7	Hydraulic Draw Bench	366
III-8	Direct Extrusion	367
III-9	Extrusion Press	368
III-10	Extrusion Tooling and Setup	369
III-11	Forging	370
III-12	Ring Rolling	371
III-13	Impacting	372
III-14	Some Clad Configurations	373
III-15	Atomization	374
III-16	Powder Metallurgy Die Compaction	375
III-17	Direct Chill Casting	376
III-18	Direct Chill (D.C.) Casting Unit	377
III-19	Continuous Sheet Casting	378
III-20	Continuous Strip Casting	379
III-21	Shot Casting	380
III-22	Roller Hearth Annealing Furnace	381
III-23	Bulk Pickling Tank	382
III-24	Continuous Pickling Line	383

LIST OF FIGURES (Continued)

Figure	Title	Page
III-25	Vapor Degreaser	384
V-1	Wastewater Sources at Plant A	1098
V-2	Wastewater Sources at Plant B	1099
V-3	Wastewater Sources at Plant C	1100
V-4	Wastewater Sources at Plant D	1101
V-5	Wastewater Sources at Plant E	1102
V-6	Wastewater Sources at Plant F	1103
V-7	Wastewater Sources at Plant G	1104
V-8	Wastewater Sources at Plant I	1105
V-9	Wastewater Sources at Plant J	1106
V-10	Wastewater Sources at Plant K	1107
V-11	Wastewater Sources at Plant L	1108
V-12	Wastewater Sources at Plant M	1109
V-13	Wastewater Sources at Plant N	1110
V-14	Wastewater Sources at Plant O	1111
V-15	Wastewater Sources at Plant P	1112
V-16	Wastewater Sources at Plant Q	1113
V-17	Wastewater Sources at Plant R	1114
V-18	Wastewater Sources at Plant S	1115
V-19	Wastewater Sources at Plant T	1116
V-20	Wastewater Sources at Plant V	1117
V-21	Wastewater Sources at Plant Z	1118

LIST OF FIGURES (Continued)

Figure	Title	Page
VII-1	Comparative Solubilities of Metal Hydroxides and Sulfide as a Function of pH	1422
VII-2	Lead Solubility in Three Alkalies	1423
VII-3	Effluent Zinc Concentrations vs. Minimum Effluent pH	1424
VII-4	Hydroxide Precipitation Sedimentation Effectiveness - Cadmium	1425
VII-5	Hydroxide Precipitation Sedimentation Effectiveness - Chromium	1426
VII-6	Hydroxide Precipitation Sedimentation Effectiveness - Copper	1427
VII-7	Hydroxide Precipitation Sedimentation Effectiveness - Lead	1428
VII-8	Hydroxide Precipitation Sedimentation Effectiveness - Nickel and Aluminum	1429
VII-9	Hydroxide Precipitation Sedimentation Effectiveness - Zinc	1430
VII-10	Hydroxide Precipitation Sedimentation Effectiveness - Iron	1431
VII-11	Hydroxide Precipitation Sedimentation Effectiveness - Manganese	1432
VII-12	Hydroxide Precipitation Sedimentation Effectiveness - TSS	1433
VII-13	Hexavalent Chromium Reduction with Sulfur Dioxide	1434
VII-14	Granular Bed Filtration	1435
VII-15	Pressure Filtration	1436
VII-16	Representative Types of Sedimentation	1437
VII-17	Activated Carbon Adsorption Column	1438
VII-18	Centrifugation	1439

LIST OF FIGURES (Continued)

Figure	Title	Page
VII-19	Treatment of Cyanide Waste by Alkaline Chlorination	1440
VII-20	Typical Ozone Plant for Waste Treatment	1441
VII-21	UV/Ozonation	1442
VII-22	Types of Evaporation Equipment	1443
VII-23	Dissolved Air Flotation	1444
VII-24	Gravity Thickening	1445
VII-25	Ion Exchange with Regeneration	1446
VII-26	Simplified Reverse Osmosis Schematic	1447
VII-27	Reverse Osmosis Membrane Configurations	1448
VII-28	Sludge Drying Bed	1449
VII-29	Simplified Ultrafiltration Flow Schematic	1450
VII-30	Vacuum Filtration	1451
VII-31	Flow Diagram for Emulsion Breaking with Chemicals	1452
VII-32	Filter Configurations	1453
VII-33	Gravity Oil/Water Separator	1454
VII-34	Flow Diagram for a Batch Treatment Ultrafiltration System	1455
VII-35	Flow Diagram of Activated Carbon Adsorption with Regeneration	1456
VII-36	Flow Diagram for Recycling with a Coolint Tower	1457
VII-37	Countercurrent Rinsing (Tanks)	1458
VII-38	Effect of Added Rinse Stages on Water Use	1459

LIST OF FIGURES (Continued)

Figure	Title	Page
VIII-1	General Logic Diagram of Computer Cost Model	1531
VIII-2	Logic Diagram of Module Design Procedure	1532
VIII-3	Logic Diagram of the Cost Estimation Routine	1533
VIII-4	Capital Cost of a Spray Rinsing System	1534
VIII-5	Capital and Annual Costs of Aerated Rectangular Fiberglass Tanks	1535
VIII-6	Capital and Annual Costs of Centrifugal Pumps	1536
VIII-7	Capital and Annual Costs of Cooling Towers and Holding Tank	1537
VIII-8	Capital and Annual Costs of Holding Tanks and Recycle Piping	1538
VIII-9	Capital and Annual Costs of Equalization	1539
VIII-10	Capital and Annual Costs of Cyanide Precipitation	1540
VIII-11	Capital and Annual Costs of Chromium Reduction	1541
VIII-12	Capital Costs of Iron Coprecipitation	1542
VIII-13	Annual Costs of Iron Coprecipitation	1543
VIII-14	Capital and Annual Costs of Chemical Emulsion Breaking	1544
VIII-15	Capital and Annual Costs of Ammonia Steam Stripping	1545
VIII-16	Capital and Annual Costs of Chemical Precipitation	1546
VIII-17	Capital Costs for Carbon Steel Vacuum Filters	1547

LIST OF FIGURES (Continued)

Figure	Title	Page
VIII-18	Capital Costs for Stainless Steel Vacuum Filters	1548
VIII-19	Annual Costs for Vacuum Filters	1549
VIII-20	Capital and Annual Costs for Multi-media and Cartridge Filtration	1550
VIII-21	Annual Costs for Contract Hauling	1551
XI-1	BPT Treatment Train for the Non-ferrous Metals Forming Category	1755
X-1	BAT Option 1 and 2 Treatment Train for the Nonferrous Metals Forming Category	1912
X-2	BAT Option 3 Treatment Train for the Nonferrous Metals Forming Category	1913

SECTION I

SUMMARY AND CONCLUSIONS

The United States Environmental Protection Agency has promulgated effluent limitations guidelines and standards for the nonferrous metals forming and metal powders category pursuant to Sections 301, 304, 306, 307, and 501 of the Clean Water Act. For convenience, this category is referred to as the nonferrous metals forming category in this document. The promulgated regulation contains effluent limitations for best practicable control technology currently available (BPT), and best available technology economically achievable (BAT), as well as pretreatment standards for new and existing sources (PSNS and PSES), and new source performance standards (NSPS).

This development document highlights the technical aspects of EPA's study of the nonferrous metals forming category. This document and the Administrative Record provide the technical basis for promulgating the effluent limitations guidelines and pretreatment standards.

The Agency's economic analysis of the regulation is set forth in a separate document entitled Economic Analysis of Effluent Limitations and Standards for the Nonferrous Metals Forming and Metal Powders Point Source Category. That document is available from the Office of Analysis and Evaluation, Economic Analysis Staff, WH-586, USEPA, Washington, D.C., 20460.

METHODOLOGY

To develop the effluent limitations guidelines and standards presented in this document, the Agency characterized the category by subdividing it, collecting raw and treated wastewater samples, and examining water usage and discharge rates, and production processes. To gather data about the category, EPA developed a data collection portfolio (dcp) or questionnaire to collect information regarding plant size, age and production, the production processes used, the quantity of process wastewater used and discharged, wastewater treatment in place, and disposal practices. The dcps were sent to 377 firms known or believed to perform nonferrous metals forming. The responses were reviewed, and it was determined that 334 plants performed nonferrous metals forming.

As a next step, EPA conducted a sampling and analytical program to characterize the raw (untreated) and treated process wastewater. This program was carried out in two stages. Screen sampling was performed at 16 facilities, each representing the forming of a particular nonferrous metal or group of metals. Samples were collected from wastewater sources associated with the major manufacturing processes in this category, i.e., forming by rolling, drawing, extruding, forging, and cladding operations, as well as associated processes, including cleaning,

etching, solution heat treatment, and annealing, among others. Each of the samples was analyzed to determine the presence or absence, and if present, the concentration, of 128 of the 129 toxic priority pollutants, plus conventional and selected nonconventional pollutants. The toxic pollutant TCDD was not analyzed for because an analytical standard for TCDD was judged to be too hazardous to be made generally available. After proposal, wastewater sampling was conducted at nine facilities. A discussion of the sampling and analysis methods, and procedures is presented in Section V.

The Agency examined the metals formed and the manufacturing processes reported in the dcps for each nonferrous metals forming operation. This information, combined with the wastewater characterization data obtained from sampling visits and reported by the nonferrous metals forming plants, became the principle bases for subcategorizing this category. Based on this information, EPA determined that the most appropriate approach to subcategorizing this category is by the metals formed. A discussion of the subcategorization scheme is presented in Section IV. For this rulemaking, the nonferrous metals forming point source category has been divided into 10 subcategories based on the differences in wastewater quantity and quality related to metal type formed. The 10 subcategories are:

1. Lead-Tin-Bismuth Forming,
2. Magnesium Forming,
3. Nickel-Cobalt Forming,
4. Precious Metals Forming,
5. Refractory Metals Forming,
6. Titanium Forming,
7. Uranium Forming,
8. Zinc Forming,
9. Zirconium-Hafnium Forming, and
10. Metal Powders.

Each subcategory is further subdivided into major sources of wastewater for specific limitation within the regulation. Other sources of wastewater not directly related to metal forming, such as stormwater runoff or sanitary water, generally were not considered for specific limitation by the regulation. The Agency believes wastewater sources of this type are site-specific, and they are best handled on a case-by-case basis. Each wastewater source identified for this rulemaking, with the exception of uranium laundry wash water, was production-normalized. That is, each waste stream was characterized by the volume of wastewater discharged per unit of production. Uranium laundry wash water was characterized by the volume of wastewater discharged per employee per day. The limitations at BPT, BAT, NSPS, PSES, and PSNS are based on the effluent flow and the treatment effectiveness.

There are 158 plants identified in the nonferrous metals forming point source category discharging an estimated 5.14 billion liters per year (1.36 billion gallons per year) of process wastewater. Untreated, this process wastewater contains approximately 393,000 kilograms (866,000 pounds) of priority pollutants, and 1.53 million kilograms (3.37 million pounds) of conventional and nonconventional pollutants. The pollutants present in the highest concentrations and selected for consideration for each subcategory are presented in Section VI.

EPA studied the characteristics of the untreated wastewater in each subcategory for the purpose of selecting in-plant control and end-of-pipe treatment options. The Agency also studied various end-of-pipe technologies to treat the pollutants present in the identified process wastewaters, including:

- Chemical precipitation and sedimentation (lime and settle),
- Chemical emulsion breaking,
- Oil skimming,
- Ammonia steam stripping,
- Cyanide oxidation or precipitation,
- Chromium reduction,
- Multimedia filtration, and
- Ion exchange.

EPA also studied various types of in-plant controls reported in the dcps and observed during sampling. The in-plant controls studied included:

- Reuse of process wastewater
- Recycle of contact cooling water and air pollution control scrubber liquor, and
- Countercurrent cascade rinsing.

Engineering model costs were estimated for each of the treatment options considered for the category on a plant-by-plant basis. These costs were then used by the Agency to estimate the impact of implementing the various options on the industry. For each subcategory for each control and treatment option, the number of potential closures, number of employees affected, and impact on price were estimated. These results are reported in the Economic Impact Assessment.

The Agency then reviewed each of the treatment options for each subcategory to determine the estimated mass of pollutant removed by the application of each treatment technology. The amount of pollutant removal after the application of the treatment technology is referred to as the benefit. The methodology used to calculate the pollutant removal estimates is presented in Section X.

TECHNOLOGY BASIS FOR LIMITATIONS AND STANDARDS

BPT

In general, the BPT level represents the average of the best existing performances of plants of various ages, sizes, processes or other common characteristics. Where existing performance is uniformly inadequate BPT may be transferred from a different subcategory or category. In balancing costs in relation to effluent reduction benefits, EPA considers the volume and nature of discharges expected after application of BPT the general environmental effects of the pollutants, cost and economic impact of the required pollution control level.

After examining the various treatment technologies, the Agency has identified BPT to represent the average of the best existing technology. EPA is promulgating mass limitations based on model end-of-pipe treatment which consists of oil skimming, lime precipitation and sedimentation technology. Chemical emulsion breaking, chromium reduction, cyanide removal, iron co-precipitation, and ammonia steam stripping are included in the model technology as preliminary treatments when necessary.

BAT

The BAT technology level represents the best economically achievable performance of plants of various ages, sizes, processes or other shared characteristics. As with BPT, where existing performance is uniformly inadequate, BAT may be transferred from a different subcategory or category. BAT may include feasible process changes or internal controls, even when not common industry practice.

In developing BAT, EPA has given substantial weight to the reasonableness of costs. The Agency considered the volume and nature of discharges, the volume and nature of discharges expected after application of BAT, the general environmental effects of the pollutants and the costs and economic impacts of the required pollution control levels. Despite this consideration of costs, the primary determinant of BAT is still effluent reduction capability.

The direct dischargers are expected to move directly to compliance with BAT limitations from existing treatment because the flow reduction used to meet BAT limitations would allow the use of smaller -- and less expensive -- lime and settle equipment than would be used to meet BPT limitations without flow reduction.

To meet the BAT effluent limitations based on this technology, the nonferrous metals forming point source category is estimated to incur a capital cost of $603,000 (1982 dollars) and a total annual cost of $202,000 (1982 dollars) above the costs required

for BPT. The Agency predicts no additional plant or line closures as a result of these costs. If the average compliance cost incurred by the plants in the industry were passed on to consumers, price increases would range from 0.1 to 1.9 percent; about the same as the BPT increases. Thus the Agency has determined that BAT is economically achievable.

NSPS

Best demonstrated technology, which is the technical basis of NSPS, is lime, settle, and filter with in-process controls to reduce wastewater flows for all subcategories except lead-tin-bismuth forming, titanium forming, zirconium-hafnium forming, and metal powders. EPA is promulgating NSPS for the lead-tin-bismuth forming, titanium forming, zirconium--hafnium forming, and metal powders subcategories on the basis of lime and settle with in-process controls to reduce wastewater flows. The subcategories which have more stringent requirements for new sources than for existing sources are magnesium forming, and metal powders. In selecting best demonstrated technology, EPA recognizes that new plants have the opportunity to implement the best and most efficient manufacturing processes and control and treatment technology.

Since NSPS is based on the same model technology as BAT for all but two subcategories, the Agency does not believe that NSPS will constitute a barrier to entry for new sources, prevent major modifications to existing sources or produce other adverse economic effects. The NSPS promulgated for the metal powder subcategory incorporates in-process control technologies that will reduce the overall cost of treatment from the cost existing sources will incure. NSPS promulgated for the magnesium forming category included the addition of a polishing filter to the end-of-pipe treatment. The Agency does not believe this will cause a barrier to entry for new sources because a new source has the opportunity to design the plant with flow reduction technologies included in the design and thus will not have costs associated with retrofitting in-process or treatment equipment into the new facility.

PSES

PSES (pretreatment standards for existing sources) are designed to prevent the discharge of pollutants which pass through, interfere with or are otherwise incompatible with the operation of POTW. Pretreatment standards are technology-based and analogous to the best available technology for removal of toxic pollutants. EPA is promulgating PSES based on the application of technology equivalent to BAT with the exception of the refractory metals forming, uranium forming, and zinc forming subcategories. For the refractory metals forming subcategory, the Agency selected PSES based on lime precipitation and sedimentation technology, in conjunction with the in-process control technologies. The uranium forming and zinc forming subcategories are excluded from PSES.

To meet the pretreatment standards for existing sources, the nonferrous metals forming point source category is estimated to incur a capital cost of $7.5 million (1982 dollars) and an annual cost of $4 million (1982 dollars). The Agency has excluded the zinc forming subcategory on the basis of economic impact, the Agency estimates that PSES could cause the closure of the larger of the two indirect dischargers in this subcategory. Aside from the zinc forming subcategory the Agency estimates there may be two titanium forming plant closures affecting 56 employees. Total production loss would be less than one percent. Thus, the Agency has determined that PSES is economically achievable.

PSNS

Like PSES, PSNS (pretreatment standards for new sources) are established to prevent the discharge of pollutants which pass-through, interfere with, or are otherwise incompatible with the operation of the POTW. New indirect dischargers, like new direct dischargers, have the opportunity to incorporate the best available demonstrated technologies including process changes, in-plant controls and end-of-pipe treatment technologies, and to use plant site selection to ensure adequate treatment system installation.

This regulation establishes mass-based PSNS for the nonferrous forming category. The treatment technology basis for the PSNS being promulgated is identical to the treatment technology set forth as the basis for the NSPS being promulgated. The Agency is promulgating PSNS for the uranium forming and zinc subcategories.

SECTION II

RECOMMENDATIONS

1. EPA has divided the nonferrous metals forming category into ten subcategories for the purpose of effluent limitations and standards. These subcategories are:

- Lead-Tin-Bismuth Forming
- Magnesium Forming
- Nickel-Cobalt Forming
- Precious Metals Forming
- Refractory Metals Forming
- Titanium Forming
- Uranium Forming
- Zinc Forming
- Zirconium-Hafnium Forming
- Metal Powders

2. BPT is being promulgated based on the model treatment technology of flow equalization, oil skimming, and chemical precipitation and sedimentation (lime and settle) technology, and where appropriate, ammonia steam stripping, chemical emulsion breaking, chromium reduction, and cyanide precipitation. Iron coprecipitation is included in this model treatment technology for removal of the pollutant molybdenum from wastewaters in the refractory metals and uranium forming subcategories. The following BPT effluent limitations are being promulgated for existing sources:

3. BAT is being promulgated based on the model treatment technology of flow equalization, oil skimming, chemical precipitation, sedimentation, and filtration (lime, settle, and filter) technology, and in-process flow reduction control methods, and where appropriate, ammonia steam stripping, chemical emulsion breaking, chromium reduction, and cyanide precipitation for the nickel-cobalt, refractory metals, uranium, and zinc forming subcategories. Iron coprecipitation is included in this model treatment technology for removal of the pollutant molybdenum from wastewaters in the refractory metals and uranium forming subcategories. BAT is being promulgated based on the model treatment technology of flow equalization, oil skimming, chemical precipitation and sedimentation (lime and settle) technology, and in-process flow reduction control methods, and where appropriate, ammonia steam stripping, chemical emulsion breaking, chromium reduction, and cyanide precipitation for the lead-tin-bismuth, magnesium, precious metals, titanium, and zirconium-hafnium forming subcategories. BAT is being promulgated based on the model treatment technology of flow equalization, oil skimming, and chemical precipitation and sedimentation (lime and settle) technology, and where appropriate, ammonia steam stripping, chemical emulsion breaking,

chromium reduction, and cyanide precipitation for the metal powders subcategory. The following BAT effluent limitations are being promulgated for existing sources:

SUBPART A: BPT AND BAT MASS LIMITATIONS FOR THE LEAD-TIN-BISMUTH FORMING SUBCATEGORY

(a) Rolling Spent Emulsions - BPT

Pollutant or pollutant property	Maximum for any one day	Maximum for monthly average
mg/off-kg (lb/million off-lbs) of lead-tin-bismuth rolled with emulsions		
Antimony	0.068	0.030
Lead	0.010	0.005
Oil & Grease	0.468	0.281
TSS	0.960	0.457
pH	Within the range of 7.5 to 10.0 at all times	

(b) Rolling Spent Soap Solutions - BPT

Pollutant or pollutant property	Maximum for any one day	Maximum for monthly average
mg/off-kg (lb/million off-lbs) of lead-tin-bismuth rolled with soap solutions		
Antimony	0.125	0.055
Lead	0.019	0.009
Oil & Grease	0.860	0.520
TSS	1.80	0.840
pH	Within the range of 7.5 to 10.0 at all times	

(c) Drawing Spent Neat Oils - BPT

There shall be no discharge of process wastewater pollutants.

(d) Drawing Spent Emulsions - BPT

Pollutant or pollutant property	Maximum for any one day	Maximum for monthly average
mg/off-kg (lb/million off-lbs) of lead-tin-bismuth drawn with emulsions		
Antimony	0.076	0.034
Lead	0.011	0.005
Oil & Grease	0.526	0.316
TSS	1.08	0.513
pH	Within the range of 7.5 to 10.0 at all times	

(e) Drawing Spent Soap Solutions - BPT

Pollutant or pollutant property	Maximum for any one day	Maximum for monthly average
mg/off-kg (lb/million off-lbs) of lead-tin-bismuth drawn with soap solutions		
Antimony	0.022	0.010
Lead	0.003	0.002
Oil & Grease	0.149	0.090
TSS	0.306	0.146
pH	Within the range of 7.5 to 10.0 at all times	

(f) Extrusion Press and Solution Heat Treatment Contact Cooling Water - BPT

Pollutant or pollutant property	Maximum for any one day	Maximum for monthly average
mg/off-kg (lb/million off-lbs) of lead-tin-bismuth heat treated		
Antimony	4.14	1.850
Lead	0.605	0.288
Oil & Grease	28.80	17.30
TSS	59.10	28.10
pH	Within the range of 7.5 to 10.0 at all times	

(g) Extrusion Press Hydraulic Fluid Leakage - BPT

Pollutant or pollutant property	Maximum for any one day	Maximum for monthly average
mg/off-kg (lb/million off-lbs) of lead-tin-bismuth extruded		
Antimony	0.158	0.071
Lead	0.023	0.011
Oil & Grease	1.10	0.660
TSS	2.26	1.07
pH	Within the range of 7.5 to 10.0 at all times	

(h) Continuous Strip Casting Contact Cooling Water - BPT

Pollutant or pollutant property	Maximum for any one day	Maximum for monthly average
mg/off-kg (lb/million off-lbs) of lead-tin-bismuth cast by the continuous strip method		
Antimony	0.003	0.001
Lead	0.0004	0.0002
Oil & Grease	0.020	0.012
TSS	0.041	0.020
pH	Within the range of 7.5 to 10.0 at all times	

(i) Semi-Continuous Ingot Casting Contact Cooling Water - BPT

Pollutant or pollutant property	Maximum for any one day	Maximum for monthly average
mg/off-kg (lb/million off-lbs) of lead-tin-bismuth ingot cast by the semi-continuous method		
Antimony	0.085	0.038
Lead	0.013	0.006
Oil & Grease	0.588	0.353
TSS	1.21	0.574
pH	Within the range of 7.5 to 10.0 at all times	

(j) Shot Casting Contact Cooling Water - BPT

Pollutant or pollutant property	Maximum for any one day	Maximum for monthly average
mg/off-kg (lb/million off-lbs) of lead-tin-bismuth shot cast		
Antimony	0.107	0.048
Lead	0.016	0.008
Oil & Grease	0.746	0.448
TSS	1.53	0.728
pH	Within the range of 7.5 to 10.0 at all times	

(k) Shot-Forming Wet Air Pollution Control Scrubber Blowdown - BPT

Pollutant or pollutant property	Maximum for any one day	Maximum for monthly average
mg/off-kg (lb/million off-lbs) of lead-tin-bismuth shot formed		
Antimony	1.69	0.753
Lead	0.247	0.118
Oil & Grease	11.8	7.06
TSS	24.1	11.5
pH	Within the range of 7.5 to 10.0 at all times	

(l) Alkaline Cleaning Spent Baths - BPT

Pollutant or pollutant property	Maximum for any one day	Maximum for monthly average
mg/off-kg (lb/million off-lbs) of lead-tin-bismuth alkaline cleaned		
Antimony	0.345	0.154
Lead	0.051	0.024
Oil & Grease	2.40	1.44
TSS	4.92	2.34
pH	Within the range of 7.5 to 10.0 at all times	

(m) Alkaline Cleaning Rinse -BPT

Pollutant or pollutant property	Maximum for any one day	Maximum for monthly average
mg/off-kg (lb/million off-lbs) of lead-tin-bismuth alkaline cleaned		
Antimony	6.78	3.02
Lead	0.991	0.472
Oil & Grease	47.2	28.4
TSS	96.8	46.0
pH	Within the range of 7.5 to 10.0 at all times	

(n) Swaging Spent Emulsions - BPT

Pollutant or pollutant property	Maximum for any one day	Maximum for monthly average
mg/off-kg (lb/million off-lbs) of lead-tin-bismuth swaged with emulsion		
Antimony	0.005	0.002
Lead	0.0008	0.0004
Oil & Grease	0.036	0.022
TSS	0.073	0.035
pH	Within the range of 7.5 to 10.0 at all times	

(o) Degreasing Spent Solvents - BPT

There shall be no discharge of process wastewater pollutants.

(a) Rolling Spent Emulsions - BAT

Pollutant or pollutant property	Maximum for any one day	Maximum for monthly average
mg/off-kg (lb/million off-lbs) of lead-tin-bismuth rolled with emulsions		
Antimony	0.067	0.030
Lead	0.010	0.005

(b) Rolling Spent Soap Solutions - BAT

Pollutant or pollutant property	Maximum for any one day	Maximum for monthly average
mg/off-kg (lb/million off-lbs) of lead-tin-bismuth rolled with soap solutions		
Antimony	0.124	0.055
Lead	0.018	0.009

(c) Drawing Spent Neat Oils - BAT

There shall be no discharge of process wastewater pollutants.

(d) Drawing Spent Emulsions - BAT

Pollutant or pollutant property	Maximum for any one day	Maximum for monthly average
mg/off-kg (lb/million off-lbs) of lead-tin-bismuth drawn with emulsions		
Antimony	0.080	0.034
Lead	0.011	0.005

(e) Drawing Spent Soap Solutions - BAT

Pollutant or pollutant property	Maximum for any one day	Maximum for monthly average
mg/off-kg (lb/million off-lbs) of lead-tin-bismuth drawn with soap solutions		
Antimony	0.022	0.010
Lead	0.003	0.002

(f) Extrusion Press and Solution Heat Treatment Contact Cooling Water - BAT

Pollutant or pollutant property	Maximum for any one day	Maximum for monthly average
mg/off-kg (lb/million off-lbs) of lead-tin-bismuth heat treated		
Antimony	0.414	0.185
Lead	0.061	0.030

(g) Extrusion Press Hydraulic Fluid Leakage - BAT

Pollutant or pollutant property	Maximum for any one day	Maximum for monthly average
mg/off-kg (lb/million off-lbs) of lead-tin-bismuth extruded		
Antimony	0.158	0.071
Lead	0.023	0.011

(h) Continuous Strip Casting Contact Cooling Water - BAT

Pollutant or pollutant property	Maximum for any one day	Maximum for monthly average
mg/off-kg (lb/million off-lbs) of lead-tin-bismuth cast by the continuous strip method		
Antimony	0.003	0.001
Lead	0.0004	0.0002

(i) Semi-Continuous Ingot Casting Contact Cooling Water - BAT

Pollutant or pollutant property	Maximum for any one day	Maximum for monthly average
mg/off-kg (lb/million off-lbs) of lead-tin-bismuth cast by the semi-continuous method		
Antimony	0.009	0.004
Lead	0.001	0.0006

(j) Shot Casting Contact Cooling Water - BAT

Pollutant or pollutant property	Maximum for any one day	Maximum for monthly average
mg/off-kg (lb/million off-lbs) of lead-tin-bismuth shot cast		
Antimony	0.107	0.048
Lead	0.016	0.008

(k) Shot-Forming Wet Air Pollution Control Scrubber Blowdown - BAT

Pollutant or pollutant property	Maximum for any one day	Maximum for monthly average
mg/off-kg (lb/million off-lbs) of lead-tin-bismuth shot formed		
Antimony	0.169	0.076
Lead	0.025	0.012

(l) Alkaline Cleaning Spent Baths - BAT

Pollutant or pollutant property	Maximum for any one day	Maximum for monthly average
mg/off-kg (lb/million off-lbs) of lead-tin-bismuth alkaline cleaned		
Antimony	0.345	0.154
Lead	0.051	0.024

(m) Alkaline Cleaning Rinse - BAT

Pollutant or pollutant property	Maximum for any one day	Maximum for monthly average
mg/off-kg (lb/million off-lbs) of lead-tin-bismuth alkaline cleaned		
Antimony	0.678	0.302
Lead	0.099	0.047

(n) Swaging Spent Emulsions - BAT

Pollutant or pollutant property	Maximum for any one day	Maximum for monthly average
mg/off-kg (lb/million off-lbs) of lead-tin-bismuth swaged with emulsion		
Antimony	0.005	0.002
Lead	0.0008	0.0004

(o) Degreasing Spent Solvents - BAT

There shall be no discharge of process wastewater pollutants.

SUBPART B: BPT and BAT MASS LIMITATIONS FOR THE MAGNESIUM FORMING SUBCATEGORY

(a) Rolling Spent Emulsions - BPT

Pollutant or pollutant property	Maximum for any one day	Maximum for monthly average
mg/off-kg (lb/million off-lbs) of magnesium rolled with emulsions		
Chromium	0.033	0.014
Zinc	0.109	0.046
Ammonia	9.95	4.37
Fluoride	4.440	1.97
Oil & Grease	1.49	0.895
TSS	3.06	1.46
pH	Within the range of 7.5 to 10.0 at all times	

(b) Forging Spent Lubricants - BPT

There shall be no discharge of process wastewater pollutants.

(c) Forging Contact Cooling Water - BPT

Pollutant or pollutant property	Maximum for any one day	Maximum for monthly average
mg/off-kg (lb/million off-lbs) of forged magnesium cooled with water		
Chromium	1.27	0.520
Zinc	4.22	1.77
Ammonia	385	170
Fluoride	172	76.3
Oil & Grease	57.8	34.7
TSS	119	56.4
pH	Within the range of 7.5 to 10.0 at all times	

(d) Forging Equipment Cleaning Wastewater - BPT

Pollutant or pollutant property	Maximum for any one day	Maximum for monthly average
mg/off-kg (lb/million off-lbs) of magnesium forged		
Chromium	0.018	0.007
Zinc	0.059	0.025
Ammonia	5.32	2.34
Fluoride	2.38	1.06
Oil& Grease	0.798	0.479
TSS	1.64	0.778
pH	Within the range of 7.5 to 10.0 at all times	

(e) Direct Chill Casting Contact Cooling Water - BPT

Pollutant or pollutant property	Maximum for any one day	Maximum for monthly average
mg/off-kg (lb/million off-lbs) of magnesium cast with direct chill methods		
Chromium	1.74	0.711
Zinc	5.77	2.41
Ammonia	527	232
Fluoride	235	105
Oil & Grease	79.0	47.4
TSS	162	77.1
pH	Within the range of 7.5 to 10.0 at all times	

(f) Surface Treatment Spent Baths - BPT

Pollutant or pollutant property	Maximum for any one day	Maximum for monthly average
mg/off-kg (lb/million off-lbs) of magnesium surface treated		
Chromium	0.205	0.084
Zinc	0.681	0.285
Ammonia	62.1	27.3
Fluoride	27.8	12.3
Oil & Grease	9.32	5.59
TSS	19.1	9.09
pH	Within the range of 7.5 to 10.0 at all times	

(g) Surface Treatment Rinse - BPT

Pollutant or pollutant property	Maximum for any one day	Maximum for monthly average
mg/off-kg (lb/million off-lbs) of magnesium surface treated		
Chromium	8.32	3.4
Zinc	27.6	11.5
Ammonia	2520	1110
Fluoride	1130	499
Oil & Grease	378	227
TSS	775	369
pH	Within the range of 7.5 to 10.0 at all times	

(h) Sawing or Grinding Spent Emulsions - BPT

Pollutant or pollutant property	Maximum for any one day	Maximum for monthly average
mg/off-kg (lb/million off-lbs) of magnesium sawed or ground		
Chromium	0.009	0.004
Zinc	0.029	0.012
Ammonia	2.60	1.15
Fluoride	1.16	0.515
Oil & Grease	0.390	0.234
TSS	0.800	0.381
pH	Within the range of 7.5 to 10.0 at all times	

(i) Degreasing Spent Solvents - BPT

There shall be no discharge of process wastewater pollutants.

(j) Wet Air Pollution Control Scrubber Blowdown - BPT

Pollutant or pollutant property	Maximum for any one day	Maximum for monthly average
mg/off-kg (lb/million off-lbs) of magnesium sanded and repaired or forged		
Chromium	0.273	0.112
Zinc	0.904	0.378
Ammonia	82.5	36.3
Fluoride	36.9	16.4
Oil & Grease	12.4	7.43
TSS	25.4	12.1
pH	Within the range of 7.5 to 10.0 at all times	

(a) Rolling Spent Emulsions - BAT

Pollutant or pollutant property	Maximum for any one day	Maximum for monthly average
mg/off-kg (lb/million off-lbs) of magnesium rolled with emulsions		
Chromium	0.033	0.014
Zinc	0.109	0.046
Ammonia	9.95	4.37
Fluoride	4.44	1.97

(b) Forging Spent Lubricants - BAT

There shall be no discharge of process wastewater pollutants.

(c) Forging Contact Cooling Water - BAT

Pollutant or pollutant property	Maximum for any one day	Maximum for monthly average
mg/off-kg (lb/million off-lbs) of forged magnesium cooled with water		
Chromium	0.127	0.052
Zinc	0.422	0.177
Ammonia	38.5	17.0
Fluoride	17.2	7.63

(d) Forging Equipment Cleaning Wastewater - BAT

Pollutant or pollutant property	Maximum for any one day	Maximum for monthly averge
mg/off-kg (lb/million off-lbs) of magnesium forged		
Chromium	0.002	0.0007
Zinc	0.006	0.003
Ammonia	0.532	0.234
Fluoride	0.238	0.106

(e) Direct Chill Casting Contact Cooling Water - BAT

Pollutant or pollutant property	Maximum for any one day	Maximum for monthly averge
mg/off-kg (lb/million off-lbs) of magnesium cast with direct chill methods		
Chromium	1.74	0.711
Zinc	5.77	2.41
Ammonia	527	232
Fluoride	235	105

(f) Surface Treatment Spent Baths - BAT

Pollutant or pollutant property	Maximum for any one day	Maximum for monthly average
mg/off-kg (lb/million off-lbs) of magnesium surface treated		
Chromium	0.205	0.084
Zinc	0.681	0.285
Ammonia	62.1	27.3
Fluoride	27.8	12.3

(g) Surface Treatment Rinse - BAT

Pollutant or pollutant property	Maximum for any one day	Maximum for monthly average
mg/off-kg (lb/million off-lbs) of magnesium surface treated		
Chromium	0.832	0.340
Zinc	2.76	1.16
Ammonia	252	111
Fluoride	113	49.9

(h) Sawing or Grinding Spent Emulsions - BAT

Pollutant or pollutant property	Maximum for any one day	Maximum for monthly average
mg/off-kg (lb/million off-lbs) of magnesium sawed or ground		
Chromium	0.009	0.004
Zinc	0.029	0.012
Ammonia	2.60	1.15
Fluoride	1.16	0.515

(i) Degreasing Spent Solvents - BAT

There shall be no discharge of process wastewater pollutants.

(j) Wet Air Pollution Control Scrubber Blowdown - BAT

Pollutant or pollutant propetty	Maximum for any one day	Maximum for monthly average
mg/off-kg (lb/million off-lbs) of magnesium sanded and repaired or forged		
Chromium	0.273	0.112
Zinc	0.904	0.378
Ammonia	82.5	36.3
Fluoride	36.9	16.4

SUBPART C: BPT AND BAT MASS LIMITATIONS FOR THE *NICKEL-COBALT* FORMING SUBCATEGORY

(a) Rolling Spent Neat Oils - BPT

There shall be no discharge of process wastewater pollutants.

(b) Rolling Spent Emulsions - BPT

Pollutant or pollutant property	Maximum for any one day	Maximum for monthly average
mg/off-kg (lb/million off-lbs) of nickel-cobalt rolled with emulsions		
Chromium	0.075	0.031
Nickel	0.327	0.216
Fluoride	10.1	4.49
Oil & Grease	3.4	2.04
TSS	6.97	3.32
pH	Within the range of 7.5 to 10.0 at all times	

(c) Rolling Contact Cooling Water - BPT

Pollutant or pollutant property	Maximum for any one day	Maximum for monthly average
mg/off-kg (lb/million off-lbs) of nickel-cobalt rolled with water		
Chromium	1.66	0.679
Nickel	7.24	4.79
Fluoride	225	99.6
Oil & Grease	75.4	45.3
TSS	155	73.5
pH	Within the range of 7.5 to 10.0 at all times	

(d) Tube Reducing Spent Lubricant - BPT

There shall be no discharge of process wastewater pollutants.

(e) Drawing Spent Neat Oils - BPT

There shall be no discharge of process wastewater pollutants.

(f) Drawing Spent Emulsions - BPT

Pollutant or pollutant property	Maximum for any one day	Maximum for monthly average
mg/off-kg (lb/million off-lbs) of nickel-cobalt drawn with emulsions		
Chromium	0.042	0.017
Nickel	0.183	0.121
Fluoride	5.68	2.52
Oil & Grease	1.91	1.15
TSS	3.91	1.86
pH	Within the range of 7.5 to 10.0 at all times	

(g) Extrusion Spent Lubricants - BPT

There shall be no discharge of process wastewater pollutants.

(h) Extrusion Press or Solution Heat Treatment Contact Cooling Water - BPT

Pollutant or pollutant property	Maximum for any one day	Maximum for monthly average
mg/off-kg (lb/million off-lbs) of extruded nickel-cobalt heat treated		
Chromium	0.037	0.015
Nickel	0.160	0.106
Fluoride	4.95	2.20
Oil & Grease	1.67	0.999
TSS	3.41	1.63
pH	Within the range of 7.5 to 10.0 at all times	

(i) Extrusion Press Hydraulic Fluid Leakage - BPT

Pollutant or pollutant property	Maximum for any one day	Maximum for monthly average
mg/off-kg (lb/million off-lbs) of nickel-cobalt extruded		
Chromium	0.102	0.042
Nickel	0.446	0.295
Fluoride	13.8	6.13
Oil & Grease	4.64	2.79
TSS	9.51	4.53
pH	Within the range of 7.5 to 10.0 at all times	

(j) Forging Equipment Cleaning Wastewater - BPT

Pollutant or pollutant property	Maximum for any one day	Maximum for monthly average
mg/off-kg (lb/million off-lbs) of nickel-cobalt forged		
Chromium	0.018	0.007
Nickel	0.077	0.051
Fluoride	2.38	1.06
Oil & Grease	0.800	0.480
TSS	1.640	0.780
pH	Within the range of 7.5 to 10.0 at all times	

(k) Forging Contact Cooling Water - BPT

Pollutant or pollutant property	Maximum for any one day	Maximum for monthly average
mg/off-kg (lb/million off-lbs) of forged nickel-cobalt cooled with water		
Chromium	0.209	0.086
Nickel	0.910	0.602
Fluoride	28.2	12.5
Oil & Grease	9.48	5.69
TSS	19.5	9.25
pH	Within the range of 7.5 to 10.0 at all times	

(l) Forging Press Hydraulic Fluid Leakage - BPT

Pollutant or pollutant property	Maximum for any one day	Maximum for monthly average
mg/off-kg (lb/million off-lbs) of nickel-cobalt forged		
Chromium	0.083	0.034
Nickel	0.359	0.238
Fluoride	11.2	4.94
Oil & Grease	3.74	2.25
TSS	7.67	3.65
pH	Within the range of 7.5 to 10.0 at all times	

(m) Forging Spent Lubricants - BPT

There shall be no discharge of process wastewater pollutants.

(n) Stationary Casting Contact Cooling Water - BPT

Pollutant or pollutant property	Maximum for any one day	Maximum for monthly average
mg/off-kg (lb/million off-lbs) of nickel-cobalt cast with stationary casting methods		
Chromium	5.33	2.18
Nickel	23.3	15.4
Fluoride	720	320
Oil & Grease	242	145
TSS	496	236
pH	Within the range of 7.5 to 10.0 at all times	

(o) Vacuum Melting Steam Condensate - BPT

There shall be no allowance for the discharge of process wastewater pollutants.

(p) Metal Powder Production Atomization Wastewater - BPT

Pollutant or pollutant property	Maximum for any one day	Maximum for monthly average
mg/off-kg (lb/million off-lbs) of nickel-cobalt metal powder atomized		
Chromium	1.16	0.472
Nickel	5.03	3.33
Fluoride	156	69.2
Oil & Grease	52.4	31.5
TSS	108	51.1
pH	Within the range of 7.5 to 10.0 at all times	

(q) Annealing and Solution Heat Treatment Contact Cooling Water - BPT

There shall be no allowance for the discharge of process wastewater pollutants.

(r) Wet Air Pollution Control Scrubber Blowdown - BPT

Pollutant or pollutant property	Maximum for any one day	Maximum for monthly average
mg/off-kg (lb/million off-lbs) of nickel-cobalt formed		
Chromium	0.357	0.146
Nickel	1.56	1.03
Fluoride	48.2	21.4
Oil & Grease	16.2	9.72
TSS	33.2	15.8
pH	Within the range of 7.5 to 10.0 at all times	

(s) Surface Treatment Spent Baths - BPT

Pollutant or pollutant property	Maximum for any one day	Maximum for monthly average
mg/off-kg (lb/million off-lbs) of nickel-cobalt surface treated		
Chromium	0.412	0.169
Nickel	1.80	1.19
Fluoride	55.7	24.7
Oil & Grease	18.7	11.2
TSS	38.4	18.3
pH	Within the range of 7.5 to 10.0 at all times	

(t) Surface Treatment Rinse - BPT

Pollutant or pollutant property	Maximum for any one day	Maximum for monthly average
mg/off-kg (lb/million off-lbs) of nickel-cobalt surface treated		
Chromium	10.4	4.25
Nickel	45.3	30.0
Fluoride	1410	623
Oil & Grease	472	283
TSS	968	460
pH	Within the range of 7.5 to 10.0 at all times	

(u) Alkaline Cleaning Spent Baths - BPT

Pollutant or pollutant property	Maximum for any one day	Maximum for monthly average
mg/off-kg (lb/million off-lbs) of nickel-cobalt alkaline cleaned		
Chromium	0.015	0.006
Nickel	0.065	0.043
Fluoride	2.02	0.895
Oil & Grease	0.678	0.407
TSS	1.39	0.661
pH	Within the range of 7.5 to 10.0 at all times	

(v) Alkaline Cleaning Rinse - BPT

Pollutant or pollutant property	Maximum for any one day	Maximum for monthly average
mg/off-kg (lb/million off-lbs) of nickel-cobalt alkaline cleaned		
Chromium	1.03	0.420
Nickel	4.48	2.96
Fluoride	139	61.5
Oil & Grease	46.6	28.0
TSS	95.6	45.5
pH	Within the range of 7.5 to 10.0 at all times	

(w) Molten Salt Rinse - BPT

Pollutant or pollutant property	Maximum for any one day	Maximum for monthly average
mg/off-kg (lb/million off-lbs) of nickel-cobalt treated with molten salt		
Chromium	3.72	1.52
Nickel	16.2	10.7
Fluoride	502	223
Oil & Grease	169	101
TSS	346	165
pH	Within the range of 7.5 to 10.0 at all times	

(x) Ammonia Rinse - BPT

Pollutant or pollutant property	Maximum for any one day	Maximum for monthly average
mg/off-kg (lb/million off-lbs) of nickel-cobalt treated with ammonia solution		
Chromium	0.007	0.003
Nickel	0.029	0.019
Fluoride	0.881	0.391
Oil & Grease	0.296	0.178
TSS	0.607	0.289
pH	Within the range of 7.5 to 10.0 at all times	

(y) Sawing or Grinding Spent Emulsions - BPT

Pollutant or pollutant property	Maximum for any one day	Maximum for monthly average
mg/off-kg (lb/million off-lbs) of nickel-cobalt sawed or ground with emulsions		
Chromium	0.018	0.007
Nickel	0.076	0.050
Fluoride	2.35	1.04
Oil & Grease	0.788	0.473
TSS	1.62	0.769
pH	Within the range of 7.5 to 10.0 at all times	

(z) Sawing or Grinding Rinse - BPT

Pollutant or pollutant property	Maximum for any one day	Maximum for monthly average
mg/off-kg (lb/million off-lbs) of nickel-cobalt sawed or ground nickel-cobalt rinsed		
Chromium	0.797	0.326
Nickel	3.48	2.30
Fluoride	108	47.8
Oil & Grease	36.2	21.7
TSS	74.2	35.3
pH	Within the range of 7.5 to 10.0 at all times	

(aa) Steam Cleaning Condensate - BPT

Pollutant or pollutant property	Maximum for any one day	Maximum for monthly average
mg/off-kg (lb/million off-lbs) of nickel-cobalt steam cleaned		
Chromium	0.013	0.006
Nickel	0.058	0.039
Fluoride	1.79	0.795
Oil & Grease	0.602	0.361
TSS	1.24	0.587
pH	Within the range of 7.5 to 10.0 at all times	

(ab) Hydrostatic Tube Testing and Ultrasonic Testing Wastewater - BPT

There shall be no allowance for the discharge of process wastewater pollutants.

(ac) Degreasing Spent Solvents - BPT

There shall be no discharge of process wastewater pollutants.

(ad) Dye Penetrant Testing Wastewater - BPT

Pollutant or pollutant property	Maximum for any one day	Maximum for monthly average
mg/off-kg (lb/million off-lbs) of nickel-cobalt tested with dye penetrant method		
Chromium	0.094	0.039
Nickel	0.409	0.271
Fluoride	12.7	5.63
Oil & Grease	4.26	2.56
TSS	8.74	4.16
pH	Within the range of 7.5 to 10.0 at all times	

(ae) Electrocoating Rinse - BPT

Pollutant or pollutant property	Maximum for any one day	Maximum for monthly average
mg/off-kg (lb/million off-lbs) of nickel-cobalt electrocoated		
Chromium	1.48	0.607
Nickel	6.47	4.28
Fluoride	201	89.0
Oil & Grease	67.4	40.5
TSS	138	65.7
pH	Within the range of 7.5 to 10.0 at all times	

(af) Miscellaneous Wastewater Sources - BPT

Pollutant or pollutant property	Maximum for any one day	Maximum for monthly average
mg/off-kg (lb/million off-lbs) of nickel-cobalt formed		
Chromium	0.108	0.044
Nickel	0.473	0.313
Fluoride	14.7	6.50
Oil & Grease	4.92	2.95
TSS	10.1	4.80
pH	Within the range of 7.5 to 10.0 at all times	

(a) Rolling Spent Neat Oils - BAT

There shall be no discharge of process wastewater pollutants.

(b) Rolling Spent Emulsions - BAT

Pollutant or pollutant property	Maximum for any one day	Maximum for monthly average
mg/off-kg (lb/million off-lbs) of nickel-cobalt rolled with emulsions		
Chromium	0.063	0.026
Nickel	0.094	0.063
Fluoride	10.1	4.49

(c) Rolling Contact Cooling Water - BAT

Pollutant or pollutant property	Maximum for any one day	Maximum for monthly average
mg/off-kg (lb/million off-lbs) of nickel-cobalt rolled with water		
Chromium	0.028	0.011
Nickel	0.042	0.028
Fluoride	4.49	1.99

(d) Tube Reducing Spent Lubricants - BAT

There shall be no discharge of process wastewater pollutants.

(e) Drawing Spent Neat Oils - BAT

There shall be no discharge of process wastewater pollutants.

(f) Drawing Spent Emulsions - BAT

Pollutant or pollutant property	Maximum for any one day	Maximum for monthly average
mg/off-kg (lb/million off-lbs) of nickel-cobalt drawn with emulsions		
Chromium	0.036	0.015
Nickel	0.053	0.036
Fluoride	5.68	2.52

(g) Extrusion Spent Lubricants - BAT

There shall be no discharge of process wastewater pollutants.

(h) Extrusion Press or Solution Heat Treatment Contact Cooling Water - BAT

Pollutant or pollutant property	Maximum for any one day	Maximum for monthly average
mg/off-kg (lb/million off-lbs) of extruded nickel-cobalt heat treated		
Chromium	0.031	0.013
Nickel	0.046	0.031
Fluoride	4.95	2.20

(i) Extrusion Press Hydraulic Fluid Leakage - BAT

Pollutant or pollutant property	Maximum for any one day	Maximum for monthly average
mg/off-kg (lb/million off-lbs) of nickel-cobalt extruded		
Chromium	0.086	0.035
Nickel	0.128	0.086
Fluoride	13.8	6.13

(j) Forging Equipment Cleaning Wastewater - BAT

Pollutant or pollutant property	Maximum for any one day	Maximum for monthly average
mg/off-kg (lb/million off-lbs) of nickel-cobalt forged		
Chromium	0.002	0.0006
Nickel	0.002	0.002
Fluoride	0.238	0.106

(k) Forging Contact Cooling Water - BAT

Pollutant or pollutant property	Maximum for any one day	Maximum for monthly average
mg/off-kg (lb/million off-lbs) of forged nickel-cobalt cooled with water		
Chromium	0.018	0.007
Nickel	0.026	0.018
Fluoride	2.82	1.25

(l) Forging Press Hydraulic Fluid Leakage - BAT

Pollutant or pollutant property	Maximum for any one day	Maximum for monthly average
mg/off-kg (lb/million off-lbs) of nickel-cobalt forged		
Chromium	0.069	0.028
Nickel	0.103	0.069
Fluoride	11.2	4.94

(m) Forging Spent Lubricants - BAT

There shall be no discharge of process wastewater pollutants.

(n) Stationary Casting Contact Cooling Water - BAT

Pollutant or pollutant property	Maximum for any one day	Maximum for monthly average
mg/off-kg (lb/million off-lbs) of nickel-cobalt cast with stationary casting methods		
Chromium	0.448	0.182
Nickel	0.666	0.448
Fluoride	72.0	32.0

(o) Vacuum Melting Steam Condensate - BAT

There shall be no allowance for the discharge of wastewater pollutants.

(p) Metal Powder Production Atomization Wastewater - BAT

Pollutant or pollutant property	Maximum for any one day	Maximum for monthly average
mg/off-kg (lb/million off-lbs) of nickel-cobalt metal powder atomized		
Chromium	0.970	0.393
Nickel	1.44	0.970
Fluoride	156	69.2

(q) Annealing and Solution Heat Treatment Contact Cooling Water - BAT

There shall be no allowance for the discharge of wastewater pollutants.

(r) Wet Air Pollution Control Scrubber Blowdown - BAT

Pollutant or pollutant property	Maximum for any one day	Maximum for monthly average
mg/off-kg (lb/million off-lbs) of nickel-cobalt formed		
Chromium	0.300	0.122
Nickel	0.446	0.300
Fluoride	48.2	21.4

(s) Surface Treatment Spent Baths - BAT

Pollutant or pollutant property	Maximum for any one day	Maximum for monthly average
mg/off-kg (lb/million off-lbs) of nickel-cobalt surface treated		
Chromium	0.346	0.141
Nickel	0.514	0.346
Fluoride	55.7	24.7

(t) Surface Treatment Rinse - BAT

Pollutant or pollutant property	Maximum for any one day	Maximum for monthly average
mg/off-kg (lb/million off-lbs) of nickel-cobalt surface treated		
Chromium	0.873	0.354
Nickel	1.30	0.873
Fluoride	141	62.3

(u) Alkaline Cleaning Spent Baths - BAT

Pollutant or pollutant property	Maximum for any one day	Maximum for monthly average
mg/off-kg (lb/million off-lbs) of nickel-cobalt alkaline cleaned		
Chromium	0.013	0.005
Nickel	0.019	0.013
Fluoride	2.02	0.895

(v) Alkaline Cleaning Rinse - BAT

Pollutant or pollutant property	Maximum for any one day	Maximum for monthly average
mg/off-kg (lb/million off-lbs) of nickel-cobalt alkaline cleaned		
Chromium	0.086	0.035
Nickel	0.128	0.086
Fluoride	13.9	6.15

(w) Molten Salt Rinse - BAT

Pollutant or pollutant property	Maximum for any one day	Maximum for monthly average
mg/off-kg (lb/million off-lbs) of nickel-cobalt treated with molten salt		
Chromium	0.312	0.127
Nickel	0.464	0.312
Fluoride	50.2	22.3

(x) Ammonia Rinse - BAT

Pollutant or pollutant property	Maximum for any one day	Maximum for monthly average
mg/off-kg (lb/million off-lbs) of nickel-cobalt treated with ammonia solution		
Chromium	0.006	0.002
Nickel	0.008	0.006
Fluoride	0.881	0.391

(y) Sawing or Grinding Spent Emulsions - BAT

Pollutant or pollutant property	Maximum for any one day	Maximum for monthly average
mg/off-kg (lb/million off-lbs) of nickel-cobalt sawed or ground with emulsions		
Chromium	0.015	0.006
Nickel	0.022	0.015
Fluoride	2.35	1.04

(z) Sawing or Grinding Rinse - BAT

Pollutant or pollutant property	Maximum for any one day	Maximum for monthly average
mg/off-kg (lb/million off-lbs) of sawed or ground nickel-cobalt rinsed		
Chromium	0.067	0.027
Nickel	0.100	0.067
Fluoride	10.8	4.78

(aa) Steam Cleaning Condensate - BAT

Pollutant or pollutant property	Maximum for any one day	Maximum for monthly average
mg/off-kg (lb/million off-lbs) of nickel-cobalt steam cleaned		
Chromium	0.011	0.005
Nickel	0.017	0.011
Fluoride	1.79	0.795

(ab) Hydrostatic Tube Testing and Ultrasonic Testing Wastewater - BAT

There shall be no allowance for the discharge of process wastewater pollutants.

(ac) Degreasing Spent Solvents - BAT

There shall be no discharge of process wastewater pollutants.

(ad) Dye Pentrant Testing Wastewater - BAT

Pollutant or pollutant property	Maximum for any one day	Maximum for monthly average
mg/off-kg (lb/million off-lbs) of nickel-cobalt tested with dye penetrant method		
Chromium	0.079	0.032
Nickel	0.117	0.079
Fluoride	12.7	5.63

(ae) Electrocoating Rinse - BAT

Pollutant or pollutant property	Maximum for any one day	Maximum for monthly average
mg/off-kg (lb/million off-lbs) of nickel-cobalt electrocoated		
Chromium	1.25	0.506
Nickel	1.86	1.25
Fluoride	201	89.0

(af) Miscellaneous Wastewater Sources - BAT

Pollutant or pollutant property	Maximum for any one day	Maximum for monthly average
mg/off-kg (lb/million off-lbs) of nickel-cobalt formed		
Chromium	0.091	0.037
Nickel	0.136	0.091
Fluoride	14.7	6.50

SUBPART D: BPT AND BAT MASS LIMITATIONS FOR THE PRECIOUS METALS FORMING SUBCATEGORY

(a) Rolling Spent Neat Oils - BPT

There shall be no discharge of process wastewater pollutants.

(b) Rolling Spent Emulsions - BPT

Pollutant or pollutant property	Maximum for any one day	Maximum for monthly average
mg/off-kg (lb/million off-lbs) of precious metals rolled with emulsions		
Chromium	0.026	0.012
Copper	0.147	0.077
Cyanide	0.023	0.010
Silver	0.032	0.013
Oil & Grease	1.54	0.925
TSS	3.16	1.51
pH	Within the range of 7.5 to 10.0 at all times	

(c) Drawing Spent Neat Oils - BPT

There shall be no discharge of process wastewater pollutants.

(d) Drawing Spent Emulsions - BPT

Pollutant or pollutant property	Maximum for any one day	Maximum for monthly average
mg/off-kg (lb/million off-lbs) of precious metals drawn with emulsions		
Cadmium	0.016	0.007
Copper	0.091	0.048
Cyanide	0.014	0.006
Silver	0.020	0.008
Oil & Grease	0.950	0.570
TSS	1.95	0.926
pH	Within the range of 7.5 to 10.0 at all times	

(e) Drawing Spent Soap Solutions - BPT

Pollutant or pollutant property	Maximum for any one day	Maximum for monthly average
mg/off-kg (lb/million off-lbs) of precious metals drawn with soap solutions		
Cadmium	0.001	0.0005
Copper	0.006	0.003
Cyanide	0.0009	0.0004
Silver	0.001	0.0006
Oil & Grease	0.063	0.038
TSS	0.128	0.061
pH	Within the range of 7.5 to 10.0 at all times	

(f) Metal Powder Production Wet Atomization Wastewater - BPT

Pollutant or pollutant property	Maximum for any one day	Maximum for monthly average
mg/off-kg (lb/million off-lbs) of precious metals powder wet atomized		
Cadmium	2.27	1.00
Copper	12.7	6.70
Cyanide	1.94	0.802
Silver	2.70	1.14
Oil & Grease	134	80.2
TSS	274	130
pH	Within the range of 7.5 to 10.0 at all times	

(g) Heat Treatment Contact Cooling Water - BPT

Pollutant or pollutant property	Maximum for any one day	Maximum for monthly average
mg/off-kg (lb/million off-lbs) of extruded precious metals heat treated		
Cadmium	1.42	0.626
Copper	7.93	4.17
Cyanide	1.21	0.501
Silver	1.71	0.709
Oil & Grease	83.4	50.1
TSS	171	81.3
pH	Within the range of 7.5 to 10.0 at all times	

(h) Semi-Continuous or Continuous Casting Contact Cooling Water - BPT

Pollutant or pollutant property	Maximum for any one day	Maximum for monthly average
mg/off-kg (lb/million off-lbs) of precious metals cast by the semi-continuous or continuous method		
Cadmium	3.50	1.55
Copper	19.6	10.3
Cyanide	2.99	1.24
Silver	4.23	1.75
Oil & Grease	206	124
TSS	423	201
pH	Within the range of 7.5 to 10.0 at all times	

(i) Stationary Casting Contact Cooling Water - BPT

There shall be no discharge of process wastewater pollutants.

(j) Direct Chill Casting Contact Cooling Water - BPT

Pollutant or pollutant property	Maximum for any one day	Maximum for monthly average
mg/off-kg (lb/million off-lbs) of precious metals cast by the direct chill method		
Cadmium	3.67	1.62
Copper	20.5	10.8
Cyanide	3.13	1.30
Silver	4.43	1.84
Oil & Grease	216	130
TSS	443	211
pH	Within the range of 7.5 to 10.0 at all times	

(k) Shot Casting Contact Cooling Water - BPT

Pollutant or pollutant property	Maximum for any one day	Maximum for monthly average
mg/off-kg (lb/million off-lbs) of precious metals shot cast		
Cadmium	1.25	0.551
Copper	6.98	3.67
Cyanide	1.07	0.441
Silver	1.51	0.624
Oil & Grease	73.4	44.1
TSS	151	71.6
pH	Within the range of 7.5 to 10.0 at all times	

(l) Wet Air Pollution Control Scrubber Blowdown - BPT

There shall be no discharge of process wastewater pollutants.

(m) Pressure Bonding Contact Cooling Water - BPT

Pollutant or pollutant property	Maximum for any one day	Maximum for monthly average
mg/off-kg (lb/million off-lbs) of precious metal and base metal pressure bonded		
Cadmium	0.029	0.013
Copper	0.159	0.084
Cyanide	0.024	0.010
Silver	0.034	0.014
Oil & Grease	1.67	1.00
TSS	3.43	1.63
pH	Within the range of 7.5 to 10.0 at all times	

(n) Surface Treatment Spent Baths - BPT

Pollutant or pollutant property	Maximum for any one day	Maximum for monthly average
mg/off-kg (lb/million off-lbs) of precious metals surface treated		
Cadmium	0.033	0.015
Copper	0.183	0.097
Cyanide	0.028	0.012
Silver	0.040	0.017
Oil & Grease	1.93	1.16
TSS	3.95	1.88
pH	Within the range of 7.5 to 10.0 at all times	

(o) Surface Treatment Rinse - BPT

Pollutant or pollutant property	Maximum for any one day	Maximum for monthly average
mg/off-kg (lb/million off-lbs) of precious metals surface treated		
Cadmium	2.10	0.924
Copper	11.7	6.16
Cyanide	1.79	0.739
Silver	2.53	1.05
Oil & Grease	123	73.9
TSS	253	120
pH	Within the range of 7.5 to 10.0 at all times	

(p) Alkaline Cleaning Spent Baths - BPT

Pollutant or pollutant property	Maximum for any one day	Maximum for monthly average
mg/off-kg (lb/million off-lbs) of precious metals alkaline cleaned		
Cadmium	0.021	0.009
Copper	0.114	0.060
Cyanide	0.018	0.007
Silver	0.025	0.010
Oil & Grease	1.20	0.720
TSS	2.46	1.170
pH	Within the range of 7.5 to 10.0 at all times	

(q) Alkaline Cleaning Rinse - BPT

Pollutant or pollutant property	Maximum for any one day	Maximum for monthly average
mg/off-kg (lb/million off-lbs) of precious metals alkaline cleaned		
Cadmium	3.81	1.68
Copper	21.3	11.2
Cyanide	3.25	1.35
Silver	4.59	1.91
Oil & Grease	224	135
TSS	459	219
pH	Within the range of 7.5 to 10.0 at all times	

(r) Alkaline Cleaning Prebonding Wastewater - BPT

Pollutant or pollutant property	Maximum for any one day	Maximum for monthly average
mg/off-kg (lb/million off-lbs) of precious metal and base metal cleaned prior to bonding		
Cadmium	3.95	1.74
Copper	22.1	11.6
Cyanide	3.37	1.39
Silver	4.76	1.97
Oil & Grease	232	139
TSS	476	226
pH	Within the range of 7.5 to 10.0 at all times	

(s) Tumbling or Burnishing Wastewater - BPT

Pollutant or pollutant property	Maximum for any one day	Maximum for monthly average
mg/off-kg (lb/million off-lbs) of precious metals tumbled or burnished		
Cadmium	4.12	1.82
Copper	23.0	12.1
Cyanide	3.51	1.45
Silver	4.96	2.06
Oil & Grease	242	145
TSS	496	236
pH	Within the range of 7.5 to 10.0 at all times	

(t) Sawing or Grinding Spent Neat Oils - BPT

There shall be no discharge of process wastewater pollutants.

(u) Sawing or Grinding Spent Emulsions - BPT

Pollutant or pollutant property	Maximum for any one day	Maximum for monthly average
mg/off-kg (lb/million off-lbs) of precious metals sawed or ground with emulsions		
Cadmium	0.032	0.014
Copper	0.178	0.094
Cyanide	0.027	0.011
Silver	0.039	0.016
Oil & Grease	1.87	1.12
TSS	3.83	1.82
pH	Within the range of 7.5 to 10.0 at all times	

(v) Degreasing Spent Solvents - BPT

There shall be no discharge of process wastewater pollutants.

(a) Rolling Spent Neat Oils - BAT

There shall be no discharge of process wastewater pollutants.

(b) Rolling Spent Emulsions - BAT

Pollutant or pollutant property	Maximum for any one day	Maximum for monthly average
mg/off-kg (lb/million off-lbs) of precious metals rolled with emulsions		
Cadmium	0.026	0.012
Copper	0.147	0.077
Cyanide	0.023	0.010
Silver	0.032	0.013

(c) Drawing Spent Neat Oils - BAT

There shall be no discharge of process wastewater pollutants.

(d) Drawing Spent Emulsions - BAT

Pollutant or pollutant property	Maximum for any one day	Maximum for monthly average
mg/off-kg (lb/million off-lbs) of precious metals drawn with emulsions		
Cadmium	0.016	0.007
Copper	0.091	0.048
Cyanide	0.014	0.006
Silver	0.020	0.008

(e) Drawing Spent Soap Solutions - BAT

Pollutant or pollutant property	Maximum for any one day	Maximum for monthly average
mg/off-kg (lb/million off-lbs) of precious metals drawn with soap solutions		
Cadmium	0.001	0.0005
Copper	0.006	0.003
Cyanide	0.0009	0.0004
Silver	0.002	0.0006

(f) Metal Powder Production Wet Atomization Wastewater - BAT

Pollutant or pollutant property	Maximum for any one day	Maximum for monthly average
mg/off-kg (lb/million off-lbs) of precious metals powder wet atomized		
Cadmium	2.27	1.00
Copper	12.7	6.68
Cyanide	1.94	0.802
Silver	2.74	1.14

(g) Heat Treatment Contact Cooling Water - BAT

Pollutant or pollutant property	Maximum for any one day	Maximum for monthly average
mg/off-kg (lb/million off-lbs) of precious metals heat treated		
Cadmium	0.142	0.063
Copper	0.793	0.417
Cyanide	0.121	0.050
Silver	0.171	0.071
Gold		

(h) Semi-Continuous and Continuous Casting Contact Cooling Water - BAT

Pollutant or pollutant property	Maximum for any one day	Maximum for monthly average
mg/off-kg (lb/million off-lbs) of precious metals cast by the semi-continuous or continuous method		
Cadmium	0.350	0.155
Copper	1.96	1.03
Cyanide	0.299	0.124
Silver	0.423	0.175

(i) Stationary Casting Contact Cooling Water - BAT

There shall be no discharge of process wastewater pollutants.

(j) Direct Chill Casting Contact Cooling Water - BAT

Pollutant or pollutant property	Maximum for any one day	Maximum for monthly average
mg/off-kg (lb/million off-lbs) of precious metals cast by the direct chill method		
Cadmium	0.3676	0.162
Copper	2.05	1.08
Cyanide	0.313	0.130
Silver	0.443	0.184

(k) Shot Casting Contact Cooling Water - BAT

Pollutant or pollutant property	Maximum for any one day	Maximum for monthly average
mg/off-kg (lbmillion off-lbs) of precious metals shot cast		
Cadmium	0.125	0.055
Copper	0.698	0.367
Cyanide	0.107	0.044
Silver	0.151	0.063

(l) Wet Air Pollution Control Scrubber Blowdown - BAT

There shall be no discharge of process wastewater pollutants.

(m) Pressure Bonding Contact Cooling Water - BAT

Pollutant or pollutant property	Maximum for any one day	Maximum for monthly average
mg/off-kg (lb/million off-lbs) of precious metal and base metal pressure bonded		
Cadmium	0.0297	0.013
Copper	0.159	0.084
Cyanide	0.0247	0.010
Silver	0.0342	0.014

(n) Surface Treatment Spent Baths - BAT

Pollutant or pollutant property	Maximum for any one day	Maximum for monthly average
mg/off-kg (lb/million off-lbs) of precious metals surface treated		
Cadmium	0.033	0.015
Copper	0.183	0.097
Cyanide	0.028	0.012
Silver	0.040	0.017

(o) Surface Treatment Rinse - BAT

Pollutant or pollutant property	Maximum for any one day	Maximum for monthly average
mg/off-kg (lb/million off-lbs) of precious metals surface treated		
Cadmium	0.210	0.093
Copper	1.17	0.616
Cyanide	0.179	0.074
Silver	0.253	0.105

(p) Alkaline Cleaning Spent Baths - BAT

Pollutant or pollutant property	Maximum for any one day	Maximum for monthly average
mg/off-kg (lb/million off-lbs) of precious metals alkaline cleaned		
Cadmium	0.021	0.009
Copper	0.114	0.060
Cyanide	0.018	0.007
Silver	0.025	0.010

(q) Alkaline Cleaning Rinse - BAT

Pollutant or pollutant property	Maximum for any one day	Maximum for monthly average
mg/off-kg (lb/million off-lbs) of precious metals alkaline cleaned		
Cadmium	0.381	0.168
Copper	2.13	1.12
Cyanide	0.325	0.135
Silver	0.459	0.191

(r) Alkaline Cleaning Prebonding Wastewater - BAT

Pollutant or pollutant property	Maximum for any one day	Maximum for monthly average
mg/off-kg (lb/million off-lbs) of precious metal and base metal cleaned prior to bonding		
Cadmium	0.400	0.174
Copper	2.210	1.16
Cyanide	0.337	0.139
Silver	0.476	0.197

(s) Tumbling or Burnishing Wastewater - BAT

Pollutant or pollutant property	Maximum for any one day	Maximum for monthly average
mg/off-kg (lb/million off-lbs) of precious metals tumbled or burnished		
Cadmium	0.412	0.182
Copper	2.300	1.21
Cyanide	0.351	0.145
Silver	0.496	0.206

(t) Sawing or Grinding Spent Neat Oils - BAT

There shall be no discharge of process wastewater pollutants.

(u) Sawing or Grinding Spent Emulsions - BAT

Pollutant or pollutant property	Maximum for any one day	Maximum for monthly average
mg/off-kg (lb/million off-lbs) of precious metals sawed or ground with emulsions		
Cadmium	0.0327	0.014
Copper	0.178	0.094
Cyanide	0.0277	0.011
Silver	0.0381	0.016

(v) Degreasing Spent Solvents - BAT

There shall be no discharge of process wastewater pollutants.

SUBPART E: BPT AND BAT MASS LIMITATIONS FOR THE REFRACTORY METALS FORMING SUBCATEGORY

(a) Rolling Spent Neat Oils and Graphite Based Lubricants - BAT

There shall be no discharge of process wastewater pollutants.

(b) Rolling Spent Emulsions - BPT

Pollutant or pollutant property	Maximum for any one day	Maximum for monthly average
mg/off-kg (lb/million off-lbs) of refractory metals rolled with emulsions		
Copper	0.815	0.429
Nickel	0.824	0.545
Fluoride	25.5	11.3
Molybdenum	2.84	1.47
Oil & Grease	8.58	5.15
TSS	17.6	8.37
pH	Within the range of 7.5 to 10.0 at all times	

(c) Drawing Spent Lubricants - BPT

There shall be no discharge of process wastewater pollutants.

(d) Extrusion Spent Lubricants - BPT

There shall be no discharge of process wastewater pollutants.

(e) Extrusion Press Hydraulic Fluid Leakage - BPT

Pollutant or pollutant property	Maximum for any one day	Maximum for monthly average
mg/off-kg (lb/million off-lbs) of refractory metals extruded		
Copper	2.26	1.19
Nickel	2.29	1.51
Fluoride	70.8	31.4
Molybdenum	7.87	4.07
Oil & Grease	23.8	14.3
TSS	48.8	23.2
pH	Within the range of 7.5 to 10.0 at all times	

(f) Forging Spent Lubricants - BPT

There shall be no discharge of process wastewater pollutants.

(g) Forging Contact Cooling Water - BPT

Pollutant or pollutant property	Maximum for any one day	Maximum for monthly average
mg/off-kg (lb/million off-lbs) of forged refractory metals cooled with water		
Copper	0.614	0.323
Nickel	0.620	0.410
Fluoride	19.2	8.53
Molybdenum	2.14	1.11
Oil & Grease	6.46	3.88
TSS	13.3	6.30
pH	Within the range of 7.5 to 10.0 at all times	

(h) Equipment Cleaning Wastewater - BPT

Pollutant or pollutant property	Maximum for any one day	Maximum for monthly average
mg/off-kg (lb/million off-lbs) of refractory metals formed		
Copper	2.59	1.36
Nickel	2.61	1.73
Fluoride	80.9	35.9
Molybdenum	8.99	4.65
Oil & Grease	27.2	16.3
TSS	55.8	26.5
pH	Within the range of 7.5 to 10.0 at all times	

(i) Metal Powder Production Wastewater - BPT

Pollutant or pollutant property	Maximum for any one day	Maximum for monthly average
mg/off-kg (lb/million off-lbs) of refractory metals powder produced		
Copper	0.534	0.281
Nickel	0.540	0.357
Fluoride	16.70	7.42
Molybdenum	1.86	0.961
Oil & Grease	5.62	3.37
TSS	11.5	5.48
pH	Within the range of 7.5 to 10.0 at all times	

(j) Metal Powder Production Floor Wash Wastewater - BPT

There shall be no discharge of process wastewater pollutants.

(k) Metal Powder Pressing Spent Lubricants - BPT

There shall be no discharge of process wastewater pollutants.

(l) Surface Treatment Spent Baths - BPT

Pollutant or pollutant property	Maximum for any one day	Maximum for monthly average
mg/off-kg (lb/million off-lbs) of refractory metals surface treated		
Copper	0.739	0.389
Nickel	0.747	0.494
Fluoride	23.2	10.3
Molybdenum	2.57	1.33
Oil & Grease	7.78	4.68
TSS	16.0	7.59
pH	Within the range of 7.5 to 10.0 at all times	

(m) Surface Treatment Rinse - BPT

Pollutant or pollutant property	Maximum for any one day	Maximum for monthly average
mg/off-kg (lb/million off-lbs) of refractory metals surface treated		
Copper	230	121
Nickel	233	154
Fluoride	7200	3200
Molybdenum	800	414
Oil & Grease	2420	1450
TSS	4960	2360
pH	Within the range of 7.5 to 10.0 at all times	

(n) Alkaline Cleaning Spent Baths - BPT

Pollutant or pollutant property	Maximum for any one day	Maximum for monthly average
mg/off-kg (lb/million off-lbs) of refractory metals alkaline cleaned		
Copper	0.635	0.334
Nickel	0.641	0.424
Fluoride	19.9	8.82
Molybdenum	2.21	1.14
Oil & Grease	6.68	4.01
TSS	13.7	6.52
pH	Within the range of 7.5 to 10.0 at all times	

(o) Alkaline Cleaning Rinse - BPT

Pollutant or pollutant property	Maximum for any one day	Maximum for monthly average
mg/off-kg (lb/million off-lbs) of refractory metals alkaline cleaned		
Copper	1550	816
Nickel	1570	1040
Fluoride	48600	21600
Molybdenum	5400	2790
Oil & Grease	16300	9790
TSS	33500	15900
pH	Within the range of 7.5 to 10.0 at all times	

(p) Molten Salt Rinse - BPT

Pollutant or pollutant property	Maximum for any one day	Maximum for monthly average
mg/off-kg (lb/million off-lbs) of refractory metals treated with molten salt		
Copper	12.1	6.33
Nickel	12.2	8.04
Fluoride	377	167
Molybdenum	41.9	21.7
Oil & Grease	127	76.0
TSS	260	124
pH	Within the range of 7.5 to 10.0 at all times	

(q) Tumbling or Burnishing Wastewater - BPT

Pollutant or pollutant property	Maximum for any one day	Maximum for monthly average
mg/off-kg (lb/million off-lbs) of refractory metals tumbled or burnished		
Copper	23.8	12.5
Nickel	24.0	15.9
Fluoride	744	330
Molybdenum	82.7	42.8
Oil & Grease	250	150
TSS	513	244
pH	Within the range of 7.5 to 10.0 at all times	

(r) Sawing or Grinding Spent Neat Oils - BPT

There shall be no discharge of process wastewater pollutants.

(s) Sawing or Grinding Spent Emulsions - BPT

Pollutant or pollutant property	Maximum for any one day	Maximum for monthly average
mg/off-kg (lb/million off-lbs) of refractory metals sawed or ground with emulsions		
Copper	0.565	0.297
Nickel	0.570	0.377
Fluoride	17.7	7.84
Molybdenum	1.97	1.02
Oil & Grease	5.94	3.57
TSS	12.2	5.79
pH	Within the range of 7.5 to 10.0 at all times	

(t) Sawing or Grinding Contact Cooling Water - BPT

Pollutant or pollutant property	Maximum for any one day	Maximum for monthly average
mg/off-kg (lb/million off-lbs) of refractory metals sawed or ground with contact cooling water		
Copper	46.2	24.3
Nickel	46.7	30.9
Fluoride	1450	642
Molybdenum	161	83.1
Oil & Grease	486	292
TSS	997	474
pH	Within the range of 7.5 to 10.0 at all times	

(u) Sawing or Grinding Rinse - BPT

Pollutant or pollutant property	Maximum for any one day	Maximum for monthly average
mg/off-kg (lb/million off-lbs) of sawed or ground refractory metals rinsed		
Copper	0.257	0.135
Nickel	0.259	0.172
Fluoride	8.03	3.57
Molybdenum	0.893	0.462
Oil & Grease	2.70	1.62
TSS	5.54	2.63
pH	Within the range of 7.5 to 10.0 at all times	

(v) Wet Air Pollution Control Scrubber Blowdown - BPT

Pollutant or pollutant property	Maximum for any one day	Maximum for monthly average
mg/off-kg (lb/million off-lbs) of refractory metals sawed ground, surface coated or surface treated		
Copper	1.50	0.787
Nickel	1.51	1.00
Fluoride	46.8	20.8
Molybdenum	5.20	2.69
Oil & Grease	15.8	9.45
TSS	32.3	15.4
pH	Within the range of 7.5 to 10.0 at all times	

(w) Miscellaneous Wastewater Sources - BPT

Pollutant or pollutant property	Maximum for any one day	Maximum for monthly average
mg/off-kg (lb/million off-lbs) of refractory metals formed		
Copper	0.656	0.345
Nickel	0.663	0.438
Fluoride	20.6	9.11
Molybdenum	2.28	1.18
Oil & Grease	6.9	4.14
TSS	14.2	6.73
pH	Within the range of 7.5 to 10.0 at all times	

(x) Dye Penetrant Testing Wastewater - BPT

Pollutant or pollutant property	Maximum for any one day	Maximum for monthly average
mg/off-kg (lb/million off-lbs) of refractory metals tested with dye penetrant methods		
Copper	0.150	0.078
Nickel	0.150	0.099
Fluoride	4.62	2.05
Molybdenum	0.513	0.266
Oil & Grease	1.60	0.931
TSS	3.20	1.52
pH	Within the range of 7.5 to 10.0 at all times	

(y) Degreasing Spent Solvents - BPT

There shall be no discharge of process wastewater pollutants.

(a) Rolling Spent Neat Oils and Graphite Based Lubricants - BAT

There shall be no discharge of process wastewater

pollutants.

(b) Rolling Spent Emulsions - BAT

Pollutant or pollutant property	Maximum for any one day	Maximum for monthly average
mg/off-kg (lb/million off-lbs) of refractory metals rolled with emulsions		
Copper	0.549	0.262
Nickel	0.236	0.159
Fluoride	25.5	11.3
Molybdenum	2.16	0.957

(c) Drawing Spent Lubricants - BAT

There shall be no discharge of process wastewater pollutants.

(d) Extrusion Spent Lubricants - BAT

There shall be no discharge of process wastewater pollutants.

(e) Extrusion Press Hydraulic Fluid Leakage - BAT

Pollutant or pollutant property	Maximum for any one day	Maximum for monthly average
mg/off-kg (lb/million off-lbs) of refractory metals extruded		
Copper	1.5	0.730
Nickel	0.655	0.441
Fluoride	71.0	31.4
Molybdenum	5.99	2.66

(f) Forging Spent Lubricants - BAT

There shall be no discharge of process wastewater pollutants.

(g) Forging Contact Cooling Water - BAT

Pollutant or pollutant property	Maximum for any one day	Maximum for monthly average
mg/off-kg (lb/million off-lbs) of forged refractory metals cooled with water		
Copper	0.041	0.020
Nickel	0.018	0.012
Fluoride	1.92	0.853
Molybdenum	0.163	0.072

(h) Equipment Cleaning Wastewater - BAT

Pollutant or pollutant property	Maximum for any one day	Maximum for monthly average
mg/off-kg (lb/million off-lbs) of refractory metals formed		
Copper	0.174	0.083
Nickel	0.075	0.051
Fluoride	8.09	3.59
Molybdenum	0.684	0.303

(i) Metal Powder Production Wastewater - BAT

Pollutant or pollutant property	Maximum for any one day	Maximum for monthly average
mg/off-kg (lb/million off-lbs) of refractory metals powder produced		
Copper	0.360	0.172
Nickel	0.155	0.104
Fluoride	16.7	7.42
Molybdenum	1.42	0.627

(j) Metal Powder Production Floor Wash Wastewater - BAT

There shall be no discharge of process wastewater pollutants.

(k) Metal Powder Pressing Spent Lubricants - BAT

There shall be no discharge of process wastewater pollutants.

(l) Surface Treatment Spent Baths - BAT

Pollutant or pollutant property	Maximum for any one day	Maximum for monthly average
mg/off-kg (lb/million off-lbs) of refractory metals surface treated		
Copper	0.498	0.237
Nickel	0.214	0.144
Fluoride	23.2	10.3
Molybdenum	1.96	0.868

(m) Surface Treatment Rinse - BAT

Pollutant or pollutant property	Maximum for any one day	Maximum for monthly average
mg/off-kg (lb/million off-lbs) of refractory metals surface treated		
Copper	15.5	7.38
Nickel	6.66	4.48
Fluoride	720.	320.
Molybdenum	60.9	27.0

(n) Alkaline Cleaning Spent Baths - BAT

Pollutant or pollutant property	Maximum for any one day	Maximum for monthly average
mg/off-kg (lb/million off-lbs) of refractory metals alkaline cleaned		
Copper	0.428	0.204
Nickel	0.184	0.124
Fluoride	19.9	8.82
Molybdenum	1.68	0.745

(o) Alkaline Cleaning Rinse - BAT

Pollutant or pollutant property	Maximum for any one day	Maximum for monthly average
mg/off-kg (lb/million off-lbs) of refractory metals alkaline cleaned		
Copper	10.5	4.98
Nickel	4.49	3.02
Fluoride	486.	216.
Molybdenum	41.1	18.2

(p) Molten Salt Rinse - BAT

Pollutant or pollutant property	Maximum for any one day	Maximum for monthly average
mg/off-kg (lb/million off-lbs) of refractory metals treated with molten salt		
Copper	0.810	0.386
Nickel	0.348	0.234
Fluoride	37.7	16.7
Molybdenum	3.19	1.41

(q) Tumbling or Burnishing Wastewater - BAT

Pollutant or pollutant property	Maximum for any one day	Maximum for monthly average
mg/off-kg (lb/million off-lbs) of refractory metals tumbled or burnished		
Copper	1.60	0.763
Nickel	0.688	0.463
Fluoride	74.4	33.0
Molybdenum	6.29	2.79

(r) Sawing or Grinding Spent Neat Oils - BAT

There shall be no discharge of process wastewater pollutants.

(s) Sawing or Grinding Spent Emulsions - BAT

Pollutant or pollutant property	Maximum for any one day	Maximum for monthly average
mg/off-kg (lb/million off-lbs) of refractory metals sawed or ground with emulsions		
Copper	0.380	0.181
Nickel	0.164	0.110
Fluoride	17.7	7.84
Molybdenum	1.50	0.663

(t) Sawing or Grinding Contact Cooling Water - BAT

Pollutant or pollutant property	Maximum for any one day	Maximum for monthly average
mg/off-kg (lb/million off-lbs) of refractory metals sawed or ground with contact cooling water		
Copper	3.11	1.48
Nickel	1.34	0.899
Fluoride	145.0	64.2
Molybdenum	12.2	5.42

(u) Sawing or Grinding Rinse - BAT

Pollutant or pollutant property	Maximum for any one day	Maximum for monthly average
mg/off-kg (lb/million off-lbs) of sawed or ground refractory metals rinsed		
Copper	0.018	0.009
Nickel	0.008	0.005
Fluoride	0.803	0.357
Molybdenum	0.068	0.030

(v) Wet Air Pollution Control Scrubber Blowdown - BAT

Pollutant or pollutant property	Maximum for any one day	Maximum for monthly average
mg/off-kg (lb/million off-lbs) of refractory metals sawed, surface coated or surface treated		
Copper	1.01	0.480
Nickel	0.433	0.291
Fluoride	46.8	20.8
Molybdenum	3.96	1.76

(w) Miscellaneous Wastewater Sources - BAT

Pollutant or pollutant property	Maximum for any one day	Maximum for monthly average
mg/off-kg (lb/million off-lbs) of refractory metals formed		
Copper	0.442	0.211
Nickel	0.190	0.128
Fluoride	20.6	9.11
Molybdenum	1.74	0.770

(x) Dye Penetrant Testing Wastewater - BAT

Pollutant or pollutant property	Maximum for any one day	Maximum for monthly average
mg/off-kg (lb/million off-lbs) of refractory metals product tested		
Copper	0.100	0.048
Nickel	0.043	0.029
Fluoride	4.62	2.05
Molybdenum	0.391	0.173

(y) Degreasing Spent Solvents

There shall be no discharge of process wastewater pollutants.

SUBPART F: BPT AND BAT MASS LIMITATIONS FOR THE TITANIUM FORMING SUBCATEGORY

(a) Rolling Spent Neat Oils - BPT

There shall be no discharge of process wastewater pollutants.

(b) Rolling Contact Cooling Water - BPT

Pollutant or pollutant property	Maximum for any one day	Maximum for monthly average
mg/off-kg (lb/million off-lbs) of titanium rolled with contact cooling water		
Cyanide	1.4	0.586
Lead	2.05	0.976
Zinc	7.13	2.98
Ammonia	651	286
Fluoride	291	129
Oil & Grease	97.6	58.6
TSS	200	95.2
pH	Within the range of 7.5 to 10.0 at all times	

(c) Drawing Spent Neat Oils - BPT

There shall be nod discharge of process wastewater pollutants.

(d) Extrusion spent Neat Oils - BPT

There shall be nod discharge of process wastewater pollutants.

(e) Extrusion Spent Emulsions - BPT

Pollutant or pollutant property	Maximum for any one day	Maximum for monthly average
mg/off-kg (lb/million off-lbs) of titanium extruded with emulsions		
Cyanide	0.021	0.009
Lead	0.030	0.015
Zinc	0.105	0.044
Ammonia	9.59	4.22
Fluoride	4.28	1.9
Oil & Grease	1.44	0.863
TSS	2.95	1.4
pH	Within the range of 7.5 to 10.0 at all times	

(f) Extrusion Press Hydraulic Fluid Leakage - BPT

Pollutant or pollutant property	Maximum for any one day	Maximum for monthly average
mg/off-kg (lb/million off-lbs) of titanium extruded		
Cyanide	0.052	0.022
Lead	0.075	0.036
Zinc	0.260	0.109
Ammonia	23.7	10.5
Fluoride	10.6	4.70
Oil & Grease	3.56	2.14
TSS	7.30	3.47
pH	Within the range of 7.5 to 10.0 at all times	

(g) Forging Spent Lubricants - BPT

There shall be no discharge of process wastewater pollutants.

(h) Forging Contact Cooling Water - BPT

Pollutant or pollutant property	Maximum for any one day	Maximum for monthly average
mg/off-kg (lb/million off-lbs) of forged titanium cooled with water		
Cyanide	0.580	0.240
Lead	0.840	0.400
Zinc	2.92	1.22
Ammonia	267	117
Fluoride	119	52.8
Oil & Grease	40.0	24.0
TSS	82.0	39.0
pH	Within the range of 7.5 to 10.0 at all times	

(i) Forging Equipment Cleaning Wastewater - BPT

Pollutant or pollutant property	Maximum for any one day	Maximum for monthly average
mg/off-kg (lb/million off-lbs) of titanium forged		
Cyanide	0.012	0.005
Lead	0.017	0.008
Zinc	0.059	0.025
Ammonia	5.33	2.35
Fluoride	2.38	1.06
Oil & Grease	0.800	0.480
TSS	1.64	0.780
pH	Within the range of 7.5 to 10.0 at all times	

(j) Forging Press Hydraulic Fluid Leakage - BPT

Pollutant or pollutant property	Maximum for any one day	Maximum for monthly average
mg/off-kg (lb/million off-lbs) of titanium forged		
Cyanide	0.293	0.121
Lead	0.424	0.202
Zinc	1.48	0.616
Ammonia	135	59.2
Fluoride	60.1	26.7
Oil & Grease	20.2	12.1
TSS	41.4	19.7
pH	Within the range of 7.5 to 10.0 at all times	

(k) Tube Reducing Spent Lubricants - BPT

There shall be no discharge of process wastewater pollutants.

(l) Heat Treatment Contact Cooling Water - BPT

There shall be no allowance for the discharge of process wastewater pollutants.

(m) Surface Treatment Spent Baths - BPT

Pollutant or pollutant property	Maximum for any one day	Maximum for monthly average
mg/off-kg (lb/million off-lbs) of titanium surface treated		
Cyanide	0.061	0.025
Lead	0.088	0.042
Zinc	0.304	0.127
Ammonia	27.7	12.2
Fluoride	12.4	5.49
Oil & Grease	4.16	2.50
TSS	8.53	4.06
pH	Within the range of 7.5 to 10.0 at all times	

(n) Surface Treatment Rinse - BPT

Pollutant or pollutant property	Maximum for any one day	Maximum for monthly average
mg/off-kg (lb/million off-lbs) of titanium surface treated		
Cyanide	8.47	3.51
Lead	12.3	5.84
Zinc	42.7	17.8
Ammonia	3,890	1,710
Fluoride	1,740	771
Oil & Grease	584	351
TSS	1,200	570
pH	Within the range of 7.5 to 10.0 at all times	

(o) Wet Air Pollution Control Scrubber Blowdown - BPT

Pollutant or pollutant property	Maximum for any one day	Maximum for monthly average
mg/off-kg (lb/million off-lbs) of titanium surface treated or forged		
Cyanide	0.621	0.257
Lead	0.899	0.428
Zinc	3.13	1.31
Ammonia	285	126
Fluoride	128	56.5
Oil & Grease	42.8	25.7
TSS	87.8	41.8
pH	Within the range of 7.5 to 10.0 at all times	

(p) Alkaline Cleaning Spent Baths - BPT

Pollutant or pollutant property	Maximum for any one day	Maximum for monthly average
mg/off-kg (lb/million off-lbs) of titanium alkaline cleaned		
Cyanide	0.070	0.029
Lead	0.101	0.048
Zinc	0.351	0.147
Ammonia	32.0	14.1
Fluoride	14.3	6.34
Oil & Grease	4.80	2.88
TSS	9.84	4.68
pH	Within the range of 7.5 to 10.0 at all times	

(q) Alkaline Cleaning Rinse - BPT

Pollutant or pollutant property	Maximum for any one day	Maximum for monthly average
mg/off-kg (lb/million of-lbs) of titanium alkaline cleaned		
Cyanide	0.801	0.331
Lead	1.16	0.552
Zinc	4.03	1.69
Ammonia	370	162
Fluoride	164	72.9
Oil & Grease	55.2	33.1
TSS	113	53.8
pH	Within the range of 7.5 to 10.0 at all times	

(r) Molten Salt Rinse - BPT

Pollutant or pollutant property	Maximum for any one day	Maximum for monthly average
mg/off-kg (lb/million of-lbs) of titanium rinsed after molten salt treatment		
Cyanide	0.277	0.115
Lead	0.401	0.191
Zinc	1.40	0.583
Ammonia	128	56.0
Fluoride	56.8	25.2
Oil & Grease	19.1	11.5
TSS	39.2	18.6
pH	Within the range of 7.5 to 10.0 at all times	

(s) Tumbling Wastewater - BPT

Pollutant or pollutant property	Maximum for any one day	Maximum for monthly average
mg/off-kg (lb/million off-lbs) of titanium tumbled		
Cyanide	0.229	0.095
Lead	0.332	0.158
Zinc	1.16	0.482
Ammonia	110.	46.
Fluoride	47.0	20.9
Oil & Grease	15.8	9.48
TSS	32.4	15.4
pH	Within the range of 7.5 to 10.0 at all times	

(t) Sawing or Grinding Spent Neat Oils - BPT

There shall be no discharge of process wastewater pollutants.

(u) Sawing or Grinding Spent Emulsions - BPT

Pollutant or pollutant property	Maximum for any one day	Maximum for monthly average
mg/off-kg (lb/million off-lbs) of titanium sawed or ground with an emulsion		
Cyanide	0.053	0.022
Lead	0.077	0.037
Zinc	0.267	0.112
Ammonia	24.4	10.7
Fluoride	10.9	4.83
Oil & Grease	3.66	2.20
TSS	7.51	3.57
pH	Within the range of 7.5 to 10.0 at all times	

(v) Sawing or Grinding Contact Cooling Water - BPT

Pollutant or pollutant property	Maximum for any one day	Maximum for monthly average
mg/off-kg (lb/million of-lbs) of titanium sawed or ground with contact cooling water		
Cyanide	1.38	0.571
Lead	2.00	0.952
Zinc	6.95	2.91
Ammonia	635	279
Fluoride	283	126
Oil & Grease	95.2	57.1
TSS	195	92.8
pH	Within the range of 7.5 to 10.0 at all times	

(w) Dye Penetrat Testing Wastewater - BPT

Pollutant or pollutant property	Maximum for any one day	Maximum for monthly average
mg/off-kg (lb/million of-lbs) of titanium tested with dye penetrant methods		
Cyanide	0.325	0.135
Lead	0.471	0.224
Zinc	1.64	0.683
Ammonia	149	65.7
Fluoride	66.7	29.6
Oil & Grease	22.4	13.5
TSS	45.9	21.9
pH	Within the range of 7.5 to 10.0 at all times	

(x) Hydrotesting Wastewater - BPT

There shall be no discharge of process wastewater pollutants.

(y) Miscellaneous Wastewater Sources - BPT

Pollutant or pollutant property	Maximum for any one day	Maximum for monthly average
mg/off-kg (lb/million off-lbs) of titanium formed		
Cyanide	0.010	0.004
Lead	0.014	0.007
Zinc	0.048	0.020
Ammonia	4.32	1.90
Fluoride	1.93	0.856
Oil & Grease	0.648	0.389
TSS	1.33	0.632
pH	Within the range of 7.5 to 10.0 at all times	

(z) Degreasing Spent Solvents - BPT

There shall be no discharge of process wastewater pollutants.

(a) Rolling Spent Neat Oils - BAT

There shall be no discharge of process wastewater pollutants.

(b) Rolling Contact Cooling Water - BAT

Pollutant or pollutant property	Maximum for any one day	Maximum for monthly average
mg/off-kg (lb/million off-lbs) of titanium rolled with contact cooling water		
Cyanide	0.142	0.059
Lead	0.205	0.098
Zinc	0.713	0.298
Ammonia	65.1	28.6
Fluoride	29.1	12.90

(c) Drawing Spent Neat Oils - BAT

There shall be no discharge of process wastewater pollutants.

(d) Extrusion Spent Neat Oils - BAT

There shall be no discharge of process wastewater pollutants.

(e) Extrusion Spent Lubricants - BAT

Pollutant or pollutant property	Maximum for any one day	Maximum for monthly average
mg/off-kg (lb/million off-lbs) of titanium extruded		
Cyanide	0.021	0.009
Lead	0.030	0.015
Zinc	0.105	0.044
Ammonia	9.59	4.22
Fluoride	4.28	1.90

(f) Extrusion Press Hydraulic Fluid Leakage - BAT

Pollutant or pollutant property	Maximum for any one day	Maximum for monthly average
mg/off-kg (lb/million off-lbs) of titanium extruded		
Cyanide	0.052	0.022
Lead	0.075	0.036
Zinc	0.260	0.109
Ammonia	23.7	10.5
Fluoride	10.6	4.70

(g) Forging Spent Lubricants - BAT

There shall be no discharge of process wastewater pollutants.

(h) Forging Contact Cooling Water - BAT

Pollutant or pollutant property	Maximum for any one day	Maximum for monthly average
mg/off-kg (lb/million off-lbs) of forged titanium cooled with water		
Cyanide	0.029	0.012
Lead	0.042	0.020
Zinc	0.146	0.061
Ammonia	13.3	5.86
Fluoride	5.95	2.64

(i) Forging Equipment Cleaning Wastewater - BAT

Pollutant or pollutant property	Maximum for any one day	Maximum for monthly average
mg/off-kg (lb/million off-lbs) of titanium forged		
Cyanide	0.012	0.005
Lead	0.017	0.008
Zinc	0.059	0.025
Ammonia	5.33	2.35
Fluoride	2.38	1.06

(j) Forging Press Hydraulic Fluid Leakage - BAT

Pollutant or pollutant property	Maximum for any one day	Maximum for monthly average
mg/off-kg (lb/million off-lbs) of titanium forged		
Cyanide	0.293	0.121
Lead	0.424	0.202
Zinc	1.48	0.616
Ammonia	135	59.2
Fluoride	60.1	26.7

(k) Tube Reducing Spent Lubricants - BAT

There shall be no discharge of process wastewater pollutants.

(l) Heat Treatment Contact Cooling Water - BAT

There shall be no discharge allowance for process wastewater pollutants.

(m) Surface Treatment Spent Baths - BAT

Pollutant or pollutant property	Maximum for any one day	Maximum for monthly average
mg/off-kg (lb/million off-lbs) of titanium surface treated		
Cyanide	0.061	0.025
Lead	0.088	0.042
Zinc	0.304	0.127
Ammonia	27.7	12.2
Fluoride	12.4	5.49

(n) Surface Treatment Rinse - BAT

Pollutant or pollutant property	Maximum for any one day	Maximum for monthly average
mg/off-kg (lb/million off-lbs) of titanium surface treated		
Cyanide	0.847	0.351
Lead	1.23	0.584
Zinc	4.27	1.78
Ammonia	389	171
Fluoride	174	77.1

(o) Wet Air Pollution Control Scrubber Blowdown - BAT

Pollutant or pollutant property	Maximum for any one day	Maximum for monthly average
mg/off-kg (lb/million off-lbs) of titanium surface treated or forged		
Cyanide	0.062	0.026
Lead	0.090	0.043
Zinc	0.313	0.131
Ammonia	28.5	12.6
Fluoride	12.8	5.68

(p) Alkaline Cleaning Spent Baths - BAT

Pollutant or pollutant property	Maximum for any one day	Maximum for monthly average
mg/off-kg (lb/million off-lbs) ot titanium alkaline cleaned		
Cyanide	0.070	0.029
Lead	0.101	0.048
Zinc	0.351	0.147
Ammonia	32.0	14.1
Fluoride	14.3	6.34

(q) Alkaline Cleaning Rinse - BAT

Pollutant or pollutant property	Maximum for any one day	Maximum for monthly average
mg/off-kg (lb/million off-lbs) of titanium alkaline cleaned		
Cyanide	0.080	0.033
Lead	0.116	0.055
Zinc	0.403	0.169
Ammonia	36.8	16.2
Fluoride	16.4	7.29

(r) Molten Salt Rinse - BAT

Pollutant or pollutant property	Maximum for any one day	Maximum for monthly average
mg/off-kg (lb/million off-lbs) of titanium treated with molten salt		
Cyanide	0.277	0.115
Lead	0.401	0.191
Zinc	1.40	0.583
Ammonia	128	56.0
Fluoride	56.8	25.2

(s) Tumbling Wastewater - BAT

Pollutant or pollutant property	Maximum for any one day	Maximum for monthly average
mg/off-kg (lb/million off-lbs) of titanium tumbled		
Cyanide	0.023	0.010
Lead	0.033	0.016
Zinc	0.116	0.048
Ammonia	11.0	4.63
Fluoride	4.70	2.09

(t) Sawing or Grinding Spent Neat Oils - BAT

There shall be no discharge of process wastewater pollutants.

(u) Sawing or Grinding Spent Emulsions - BAT

Pollutant or pollutant property	Maximum for any one day	Maximum for monthly average
mg/off-kg (lb/million off-lbs) of titanium sawed or ground with emulsions		
Cyanide	0.053	0.022
Lead	0.077	0.037
Zinc	0.267	0.112
Ammonia	24.4	10.7
Fluoride	10.9	4.83

(v) Sawing or Grinding Contact Cooling Water - BAT

Pollutant or pollutant property	Maximum for any one day	Maximum for monthly average
mg/off-kg (lb/million off-lbs) to titanium sawed or ground with contact cooling water		
Cyanide	0.138	0.057
Lead	0.200	0.095
Zinc	0.695	0.291
Ammonia	63.5	27.9
Fluoride	28.3	12.6

(w) Dye Penetrant Testing Wastewater - BAT

Pollutant or pollutant property	Maximum for any one day	Maximum for monthly average
mg/off-kg (lb/million off-lbs) of titanium tested with dye penetrant methods		
Cyanide	0.325	0.135
Lead	0.471	0.224
Zinc	1.64	0.683
Ammonia	149	65.7
Fluoride	66.7	29.6

(x) Hydrotesting Wastewater - BAT

There shall be no discharge of process wastewater pollutants.

(y) Miscellaneous Wastewater Sources - BAT

Pollutant or pollutant property	Maximum for any one day	Maximum for monthly average
mg/off-kg (lb/million off-lbs) of titanium formed		
Cyanide	0.010	0.004
Lead	0.014	0.007
Zinc	0.048	0.020
Ammonia	4.32	1.90
Fluoride	1.93	0.856

(z) Degreasing Spent Solvents - BAT

There shall be no discharge of process wastewater pollutants.

SUBPART G: BPT and BAT MASS LIMITATIONS FOR THE URANIUM FORMING SUBCATEGORY

(a) Extrusion Spent Lubricants - BPT

There shall be no discharge process wastewater pollutants.

(b) Extrusion Tool Contact Cooling Water - BPT

Pollutant or pollutant property	Maximum for any one day	Maximum for monthly average
mg/off-kg (lb/million off-lbs) of uranium extruded		
Cadmium	0.117	0.052
Chromium	0.152	0.062
Copper	0.654	0.344
Lead	0.145	0.069
Nickel	0.661	0.437
Fluoride	20.5	9.08
Molybdenum	2.28	1.18
Oil & Grease	6.88	4.13
TSS	14.1	6.71
pH	Within the range of 7.5 to 10.0 at all times	

(c) Heat Treatment Contact Cooling Water - BPT

Pollutant or pollutant property	Maximum for any one day	Maximum for monthly average
mg/off-kg (lb/million off-lbs) of extruded or forged uranium heat treated		
Cadmium	0.646	0.285
Chromium	0.836	0.342
Copper	3.61	1.90
Lead	0.798	0.380
Nickel	3.65	2.42
Fluoride	113	50.2
Molybdenum	12.6	6.5
Oil & Grease	38.0	22.8
TSS	77.9	37.1
pH	Within the range of 7.5 to 10.0 at all times	

(d) Forging Spent Lubricants - BPT

There shall be no discharge of process wastewater pollutants.

(e) Surface Treatment Spent Baths - BPT

Pollutant or pollutant property	Maximum for any one day	Maximum for monthly average
mg/off-kg (lb/million off-lbs) of uranium surface treated		
Cadmium	0.010	0.004
Chromium	0.012	0.005
Copper	0.052	0.027
Lead	0.012	0.006
Nickel	0.052	0.035
Fluoride	1.62	0.718
Molybdenum	0.180	0.093
Oil & Grease	0.544	0.327
TSS	1.12	0.531
pH	Within the range of 7.5 to 10.0 at all times	

(f) Surface Treatment Rinse - BPT

Pollutant or pollutant property	Maximum for any one day	Maximum for monthly average
mg/off-kg (lb/million off-lbs) of uranium surface treated		
Cadmium	0.115	0.050
Chromium	0.149	0.061
Copper	0.641	0.337
Lead	0.142	0.068
Nickel	0.647	0.428
Fluoride	20.1	8.90
Molybdenum	2.23	1.16
Oil & Grease	6.74	4.05
TSS	13.8	6.57
pH	Within the range of 7.5 to 10.0 at all times	

(g) Wet Air Pollution Control Scrubber Blowdown - BPT

Pollutant or pollutant property	Maximum for any one day	Maximum for monthly average
mg/off-kg (lb/million off-lbs) of uranium surface treated		
Cadmium	0.001	0.0006
Chromium	0.002	0.0007
Copper	0.007	0.004
Lead	0.002	0.0007
Nickel	0.007	0.005
Fluoride	0.208	0.092
Molybdenum	0.023	0.012
Oil & Grease	0.070	0.042
TSS	0.143	0.068
pH	Within the range of 7.5 to 10.0 at all times	

(h) Sawing or Grinding Spent Emulsions - BPT

Pollutant or pollutant property	Maximum for any one day	Maximum for monthly average
mg/off-kg (lb/million off-lbs) of uranium sawed or ground with emulsions		
Cadmium	0.002	0.0009
Chromium	0.003	0.001
Copper	0.011	0.006
Lead	0.003	0.001
Nickel	0.011	0.007
Fluoride	0.338	0.150
Molybdenum	0.038	0.020
Oil & Grease	0.114	0.068
TSS	0.233	0.111
pH	Within the range of 7.5 to 10.0 at all times	

(i) Sawing or Grinding Contact Cooling Water - BPT

Pollutant or pollutant property	Maximum for any one day	Maximum for monthly average
mg/off-kg (lb/million off-lbs) of uranium sawed or ground with contact cooling water		
Cadmium	0.561	0.248
Chromium	0.726	0.297
Copper	3.14	1.65
Lead	0.693	0.330
Nickel	3.17	2.1
Fluoride	98.2	43.6
Molybdenum	10.9	5.65
Oil & Grease	33.0	19.8
TSS	67.7	32.2
pH	Within the range of 7.5 to 10.0 at all times	

(j) Sawing or Grinding Rinse - BPT

Pollutant or pollutant property	Maximum for any one day	Maximum for monthly average
mg/off-kg (lb/million off-lbs) of sawed or ground uranium rinsed		
Cadmium	0.002	0.0007
Chromium	0.002	0.0009
Copper	0.009	0.005
Lead	0.002	0.001
Nickel	0.009	0.006
Fluoride	0.277	0.123
Molybdenum	0.031	0.016
Oil & Grease	0.093	0.056
TSS	0.191	0.091
pH	Within the range of 7.5 to 10.0 at all times	

(k) Area Cleaning Rinse - BPT

Pollutant or pollutant property	Maximum for any one day	Maximum for monthly average
mg/off-kg (lb/million off-lbs) of uranium formed		
Cadmium	0.015	0.007
Chromium	0.019	0.008
Copper	0.082	0.043
Lead	0.018	0.009
Nickel	0.083	0.055
Fluoride	2.56	1.14
Molybdenum	0.284	0.147
Oil & Grease	0.858	0.515
TSS	1.76	0.837
pH	Within the range of 7.5 to 10.0 at all times	

(l) Drum Washwater - BPT

Pollutant or pollutant property	Maximum for any one day	Maximum for monthly average
mg/off-kg (lb/million off-lbs) of uranium formed		
Cadmium	0.015	0.007
Chromium	0.020	0.008
Copper	0.084	0.045
Lead	0.019	0.009
Nickel	0.085	0.057
Fluoride	2.64	1.17
Molybdenum	0.293	0.152
Oil & Grease	0.886	0.532
TSS	1.82	0.864
pH	Within the range of 7.5 to 10.0 at all times	

(m) Laundry Washwater - BPT

Pollutant or pollutant property	Maximum for any one day	Maximum for monthly average
mg/employee - day		
Cadmium	17.8	7.86
Chromium	23.1	9.43
Copper	99.6	52.4
Lead	22.0	10.5
Nickel	101	66.6
Fluoride	3,120	1,390
Molybdenum	347	179
Oil & Grease	1,050	629
TSS	2,150	1,020
pH	Within the range of 7.5 to 10.0 at all times	

(n) Degreasing Spent Solvents - BPT

There shall be no discharge of process wastewater pollutants.

(a) Extrusion Spent Lubricants - BAT

There shall be no discharge of process wastewater pollutants.

(b) Extrusion Tool Contact Cooling Water - BAT

Pollutant or pollutant property	Maximum for any one day	Maximum for monthly average
mg/off-kg (lb/million off-lbs) of uranium extruded		
Cadmium	0.007	0.003
Chromium	0.013	0.005
Copper	0.044	0.021
Lead	0.010	0.005
Nickel	0.019	0.013
Fluoride	2.05	0.908
Molybdenum	0.173	0.077

(c) Heat Treatment Contact Cooling Water - BAT

Pollutant or pollutant property	Maximum for any one day	Maximum for monthly average
mg/off-kg (lb/million off-lbs) of extruded or forged uranium heat treated		
Cadmium	0.006	0.003
Chromium	0.012	0.005
Copper	0.040	0.019
Lead	0.009	0.004
Nickel	0.017	0.012
Fluoride	1.86	0.827
Molybdenum	0.158	0.070

(d) Forging Spent Lubricants - BAT

There shall be no discharge of process wastewater pollutants.

(e) Surface Treatment Spent Baths - BAT

Pollutant or pollutant property	Maximum for any one day	Maximum for monthly average
mg/off-kg (lb/million off-lbs) of uranium surface treated		
Cadmium	0.006	0.002
Chromium	0.010	0.004
Copper	0.035	0.017
Lead	0.008	0.004
Nickel	0.015	0.010
Fluoride	1.62	0.718
Molybdenum	0.137	0.061

(f) Surface Treatment Rinse - BAT

Pollutant or pollutant property	Maximum for any one day	Maximum for monthly average
mg/off-kg (lb/million off-lbs) of uranium surface treated		
Cadmium	0.068	0.027
Chromium	0.125	0.051
Copper	0.432	0.206
Lead	0.095	0.044
Nickel	0.186	0.125
Fluoride	20.1	8.90
Molybdenum	1.70	0.752

(g) Wet Air Pollution Control Scrubber Blowdown - BAT

Pollutant or pollutant property	Maximum for any one day	Maximum for monthly average
mg/off-kg (lb/million off-lbs) of uranium surface treated		
Cadmium	0.0007	0.0003
Chromium	0.001	0.0005
Copper	0.005	0.002
Lead	0.001	0.0005
Nickel	0.002	0.001
Fluoride	0.208	0.092
Molybdenum	0.018	0.008

(h) Sawing or Grinding Spent Emulsions - BAT

Pollutant or pollutant property	Maximum for any one day	Maximum for monthly average
mg/off-kg (lb/million off-lbs) of uranium sawer or ground with emulsions		
Cadmium	0.001	0.0005
Chromium	0.002	0.0009
Copper	0.007	0.004
Lead	0.002	0.001
Nickel	0.003	0.002
Fluoride	0.338	0.150
Molybdenum	0.029	0.013

(i) Sawing or Grinding Contact Cooling Water - BAT

Pollutant or pollutant property	Maximum for any one day	Maximum for monthly average
mg/off-kg (lb/million off-lbs) of uranium sawed or ground with contact cooling water		
Cadmium	0.033	0.013
Chromium	0.061	0.025
Copper	0.211	0.101
Lead	0.046	0.022
Nickel	0.091	0.061
Fluoride	9.82	4.36
Molybdenum	0.830	0.368

(j) Sawing or Grinding Rinse - BAT

Pollutant or pollutant property	Maximum for any one day	Maximum for monthly average
mg/off-kg (lb/million off-lbs) of sawed or ground uranium rinsed		
Cadmium	0.001	0.0004
Chromium	0.002	0.0007
Copper	0.006	0.003
Lead	0.002	0.0006
Nickel	0.003	0.002
Fluoride	0.277	0.123
Molybdenum	0.024	0.011

(k) Area Cleaning Rinse - BAT

Pollutant or pollutant property	Maximum for any one day	Maximum for monthly average
mg/off-kg (lb/million off-lbs) of uranium formed		
Cadmium	0.009	0.004
Chromium	0.016	0.007
Copper	0.055	0.026
Lead	0.012	0.006
Nickel	0.024	0.016
Fluoride	2.56	1.14
Molybdenum	0.216	0.096

(l) Drum Washwater - BAT

Pollutant or pollutant property	Maximum for any one day	Maximum for monthly average
mg/off-kg (lb/million off-lbs) of uranium formed		
Cadmium	0.009	0.004
Chromium	0.017	0.007
Copper	0.057	0.027
Lead	0.013	0.006
Nickel	0.025	0.017
Fluoride	2.64	1.17
Molybdenum	0.223	0.099

(m) Laundry Washwater - BAT

Pollutant or pollutant property	Maximum for any one day	Maximum for monthly average
mg/employee - day		
Cadmium	5.24	2.10
Chromium	9.70	3.93
Copper	33.6	16.0
Lead	7.34	3.41
Nickel	14.4	9.70
Fluoride	1,560	692
Molybdenum	132	58.4

(n) Degreasing Spent Solvents - BAT

There shall be no discharge of process wastewater pollutants.

SUBPART H: BPT AND BAT MASS LIMITATIONS FOR THE ZINC FORMING SUBCATEGORY

(a) Rolling Spent Neat Oils - BPT

There shall be no discharge of process wastewater pollutants.

(b) Rolling Spent Emulsions - BPT

Pollutant or pollutant property	Maximum for any one day	Maximum for monthly average
mg/off-kg (lb/million off-lbs) of zinc rolled with emulsions		
Chromium	0.0006	0.0003
Copper	0.003	0.002
Cyanide	0.0004	0.0002
Zinc	0.002	0.0009
Oil & Grease	0.028	0.017
TSS	0.057	0.027
pH	Within the range of 7.5 to 10.0 at all times.	

(c) Rolling Contact Cooling Water - BPT

Pollutant or pollutant property	Maximum for any one day	Maximum for monthly average
mg/off-kg (lb/million off-lbs) of zinc rolled with contact cooling water		
Chromium	0.236	0.097
Copper	1.02	0.536
Cyanide	0.156	0.065
Zinc	0.783	0.327
Oil & Grease	10.7	6.43
TSS	22.0	10.5
pH	Within the range of 7.5 to 10.0 at all times.	

(d) Drawing Spent Emulsions - BPT

Pollutant or pollutant property	Maximum for any one day	Maximum for monthly average
mg/off-kg (lb/million off-lbs) of zinc drawn with emulsions		
Chromium	0.003	0.001
Copper	0.011	0.006
Cyanide	0.002	0.0007
Zinc	0.009	0.004
Oil & Grease	0.116	0.070
TSS	0.238	0.113
pH	Within the range of 7.5 to 10.0 at all times	

(e) Direct Chill Casting Contact Cooling Water - BPT

Pollutant or pollutant property	Maximum for any one day	Maximum for monthly average
mg/off-kg (lb/million off-lbs) of zinc cast by the direct chill method		
Chromium	0.222	0.091
Copper	0.960	0.505
Cyanide	0.147	0.061
Zinc	0.738	0.308
Oil & Grease	10.1	6.06
TSS	20.7	9.85
pH	Within the range of 7.5 to 10.0 at all times	

(f) Stationary Casting Contact Cooling Water - BPT

There shall be no discharge of process wastewater pollutants.

(g) Heat Treatment Contact Cooling Water - BPT

Pollutant or pollutant property	Maximum for any one day	Maximum for monthly average
mg/off-kg (lb/million off-lbs) of zinc heat treated		
Chromium	0.336	0.138
Copper	1.45	0.763
Cyanide	0.221	0.092
Zinc	1.12	0.466
Oil & Grease	15.3	9.16
TSS	31.3	14.9
pH	Within the range of 7.5 to 10.0 at all times	

(h) Surface Treatment Spent Baths - BPT

Pollutant or pollutant property	Maximum for any one day	Maximum for monthly average
mg/off-kg (lb/million off-lbs) of zinc surface treated		
Chromium	0.039	0.016
Copper	0.169	0.089
Cyanide	0.026	0.011
Zinc	0.130	0.054
Oil & Grease	1.78	1.07
TSS	3.64	1.73
pH	Within the range of 7.5 to 10.0 at all times.	

(i) Surface Treatment Rinse - BPT

Pollutant or pollutant property	Maximum for any one day	Maximum for monthly average
mg/off-kg (lb/million off-lbs) of zinc surface treated		
Chromium	1.58	0.645
Copper	6.80	3.58
Cyanide	1.04	0.430
Zinc	5.23	2.19
Oil & Grease	71.6	43.0
TSS	147	69.8
pH	Within the range of 7.5 to 10.0 at all times.	

(j) Alkaline Cleaning Spent Baths - BPT

Pollutant or pollutant property	Maximum for any one day	Maximum for monthly average
mg/off-kg (lb/million off-lbs) of zinc alkaline cleaned		
Chromium	0.002	0.0007
Copper	0.007	0.004
Cyanide	0.001	0.0004
Zinc	0.005	0.002
Oil & Grease	0.071	0.043
TSS	0.146	0.069
pH	Within the range of 7.5 to 10.0 at all times.	

(k) Alkaline Cleaning Rinse - BPT

Pollutant or pollutant property	Maximum for any one day	Maximum for monthly average
mg/off-kg (lb/million off-lbs) of zinc alkaline cleaned		
Chromium	0.744	0.304
Copper	3.21	1.69
Cyanide	0.490	0.203
Zinc	2.47	1.03
Oil & Grease	33.8	20.3
TSS	69.3	33.0
pH	Within the range of 7.5 to 10.0 at all times.	

(l) Sawing or Grinding Spent Emulsions - BPT

Pollutant or pollutant property	Maximum for any one day	Maximum for monthly average
mg/off-kg (lb/million off-lbs) of zinc sawed or ground with emulsions		
Chromium	0.011	0.005
Copper	0.045	0.024
Cyanide	0.007	0.003
Zinc	0.035	0.015
Oil & Grease	0.476	0.286
TSS	0.976	0.464
pH	Within the range of 7.5 to 10.0 at all times.	

(m) Electrocoating Rinse - BPT

Pollutant or pollutant property	Maximum for any one day	Maximum for monthly average
mg/off-kg (lb/million off-lbs) of zinc electrocoated		
Chromium	1.01	0.412
Copper	4.35	2.29
Cyanide	0.664	0.275
Zinc	3.35	1.40
Oil & Grease	45.8	27.5
TSS	93.9	44.7
pH	Within the range of 7.5 to 10.0 at all times.	

(n) Degreasing Spent Solvents - BPT

There shall be no discharge of process wastewater pollutants.

(a) Rolling Spent Neat Oils - BAT

There shall be no discharge of process wastewater pollutants.

(b) Rolling Spent Emulsions - BAT

Pollutant or pollutant property	Maximum for any one day	Maximum for monthly average
mg/off-kg (lb/million off-lbs) of zinc rolled with emulsions		
Chromium	0.0005	0.0002
Copper	0.002	0.0009
Cyanide	0.0003	0.0001
Zinc	0.002	0.0006

(c) Rolling Contact Cooling Water - BAT

Pollutant or pollutant property	Maximum for any one day	Maximum for monthly average
mg/off-kg (lb/million off-lbs) of zinc rolled with contact cooling water		
Chromium	0.020	0.009
Copper	0.069	0.033
Cyanide	0.011	0.004
Zinc	0.055	0.023

(d) Drawing Spent Emulsions - BAT

Pollutant or pollutant property	Maximum for any one day	Maximum for monthly average
mg/off-kg (lb/million off-lbs) of zinc drawn with emulsions		
Chromium	0.002	0.0009
Copper	0.008	0.004
Cyanide	0.001	0.0005
Zinc	0.006	0.003

(e) Direct Chill Casting Contact Cooling Water - BAT

Pollutant or pollutant property	Maximum for any one day	Maximum for monthly average
mg/off-kg (lb/million off-lbs) of zinc cast by the direct chill method		
Chromium	0.019	0.008
Copper	0.065	0.031
Cyanide	0.010	0.004
Zinc	0.052	0.021

(f) Stationary Casting Contact Cooling Water - BAT

There shall be no discharge of process wastewater pollutants.

(g) Heat Treatment Contact Cooling Water - BAT

Pollutant or pollutant property	Maximum for any one day	Maximum for monthly average
mg/off-kg (lb/million off-lbs) of zinc heat treated		
Chromium	0.029	0.012
Copper	0.098	0.047
Cyanide	0.016	0.006
Zinc	0.078	0.032

(h) Surface Treatment Spent Baths - BAT

Pollutant or pollutant property	Maximum for any one day	Maximum for monthly average
mg/off-kg (lb/million off-lbs) of zinc surface treated		
Chromium	0.033	0.014
Copper	0.114	0.054
Cyanide	0.018	0.007
Zinc	0.091	0.038

(i) Surface Treatment Rinse - BAT

Pollutant or pollutant property	Maximum for any one day	Maximum for monthly average
mg/off-kg (lb/million off-lbs) of zinc surfact treated		
Chromium	0.133	0.054
Copper	0.458	0.219
Cyanide	0.072	0.029
Zinc	0.365	0.151

(j) Alkaline Cleaning Spent Baths - BAT

Pollutant or pollutant property	Maximum for any one day	Maximum for monthly average
mg/off-kg (lb/million off-lbs) of zinc alkaline cleaned		
Chromium	0.002	0.0006
Copper	0.005	0.002
Cyanide	0.0007	0.0003
Zinc	0.004	0.002

(k) Alkaline Cleaning Rinse - BAT

Pollutant or pollutant property	Maximum for any one day	Maximum for monthly average
mg/off-kg (lb/million off-lbs) of zinc alkaline cleaned		
Chromium	0.626	0.254
Copper	2.17	1.03
Cyanide	0.338	0.135
Zinc	1.73	0.710

(l) Sawing or Grinding Spent Emulsions - BAT

Pollutant or pollutant property	Maximum for any one day	Maximum for monthly average
mg/off-kg (lb/million off-lbs) of zinc sawed or ground with emulsions		
Chromium	0.009	0.004
Copper	0.031	0.015
Cyanide	0.005	0.002
Zinc	0.025	0.010

(m) Electrocoating Rinse - BAT

Pollutant or pollutant property	Maximum for any one day	Maximum for monthly average
mg/off-kg (lb/million off-lbs) of zinc electrocated		
Chromium	0.085	0.035
Copper	0.293	0.140
Cyanide	0.046	0.019
Zinc	0.234	0.096

(n) Degreasing Spent Solvents - BAT

There shall be no discharge of process wastewater pollutants.

SUBPART I: BPT AND BAT MASS LIMITATIONS FOR THE ZIRCONIUM-HAFNIUM FORMING SUBCATEGORY

(a) Rolling Spent Neat Oils - BPT

There shall be no discharge of process wastewater pollutants.

(b) Drawing Spent Lubricants - BPT

There shall be no discharge of process wastewater pollutants.

(c) Extrusion Spent Emulsions - BPT

There shall be no discharge of process wastewater pollutants.

(d) Extrusion Press Hydraulic Fluid Leakage - BPT

Pollutant or pollutant property	Maximum for any one day	Maximum for monthly average
mg/off-kg (lb/million off-lbs) of zirconium-hafnium extruded		
Chromium	0.104	0.043
Cyanide	0.069	0.029
Nickel	0.455	0.301
Ammonia	31.6	13.9
Fluoride	14.1	6.26
Oil & Grease	4.74	2.85
TSS	9.72	4.62
pH	Within the range of 7.5 to 10.0 at all times.	

(e) Swaging Spent Neat Oils - BPT

There shall be no discharge of process wastewater pollutants.

(f) Heat Treatment Contact Cooling Water - BPT

Pollutant or pollutant property	Maximum for any one day	Maximum for monthly average
mg/off-kg (lb/million off-lbs) of zirconium-hafnium heat treated		
Chromium	0.151	0.062
Cyanide	0.100	0.041
Nickel	0.659	0.436
Ammonia	45.7	20.1
Fluoride	20.4	9.06
Oil & Grease	6.86	4.12
TSS	14.1	6.69
pH	Within the range of 7.5 to 10.0 at all times.	

(g) Tube Reducing Spent Lubricants - BPT

There shall be no discharge of process wastewater pollutants.

(h) Surface Treatment Spent Baths - BPT

Pollutant or pollutant property	Maximum for any one day	Maximum for monthly average
mg/off-kg (lb/million off-lbs) of zirconium-hafnium surface treated		
Chromium	0.150	0.061
Cyanide	0.099	0.041
Nickel	0.653	0.432
Ammonia	45.3	20.0
Fluoride	20.3	8.98
Oil & Grease	6.80	4.08
TSS	14.0	6.63
pH	Within the range of 7.5 to 10.0 at all times.	

(i) Surface Treatment Rinse - BPT

Pollutant or pollutant property	Maximum for any one day	Maximum for monthly average
mg/off-kg (lb/million off-lbs) of zirconium-hafnium surface treated		
Chromium	3.91	1.60
Cyanide	2.58	1.07
Nickel	17.1	11.3
Ammonia	1,190	521
Fluoride	529	235
Oil & Grease	178	107
TSS	364	173
pH	Within the range of 7.5 to 10.0 at all times.	

(j) Alkaline Cleaning Spent Baths - BPT

Pollutant or pollutant property	Maximum for any one day	Maximum for monthly average
mg/off-kg (lb/million off-lbs) of zirconium-hafnium alkaline cleaned		
Chromium	0.704	0.288
Cyanide	0.464	0.192
Nickel	3.07	2.03
Ammonia	214	93.8
Fluoride	95.2	42.3
Oil & Grease	32.0	19.2
TSS	65.6	31.2
pH	Within the range of 7.5 to 10.0 at all times.	

(k) Alkaline Cleaning Rinse - BPT

Pollutant or pollutant property	Maximum for any one day	Maximum for monthly average
mg/off-kg (lb/million off-lbs) of zirconium-hafnium alkaline cleaned		
Chromium	13.8	5.65
Cyanide	9.11	3.77
Nickel	60.3	39.9
Ammonia	4,190	1,840
Fluoride	1870	829
Oil & Grease	628	377
TSS	1290	613
pH	Within the range of 7.5 to 10.0 at all times.	

(l) Sawing or Grinding Spent Emulsions - BPT

Pollutant or pollutant property	Maximum for any one day	Maximum for monthly average
mg/off-kg (lb/million off-lbs) of zirconium-hafnium sawed or ground with emulsions		
Chromium	0.124	0.051
Cyanide	0.082	0.034
Nickel	0.540	0.357
Ammonia	37.5	16.5
Fluoride	16.7	7.42
Oil & Grease	5.62	3.37
TSS	11.5	5.48
pH	Within the range of 7.5 to 10.0 at all times.	

(m) Wet Air Pollution Control Scrubber Blowdown - BPT

There shall be no allowance for the discharge of process wastewater pollutants.

(n) Degreasing Spent Solvents - BPT

There shall be no discharge of process wastewater pollutants.

(o) Degreasing Rinse - BPT

There shall be no discharge of process wastewater pollutants.

(p) Molten Salt Rinse - BPT

Pollutant or pollutant property	Maximum for any one day	Maximum for monthly average
mg/off-kg (lb/million off-lbs) of zirconium-hafnium rinsed following molten salt treatment		
Chromium	3.33	1.360
Cyanide	2.20	0.907
Nickel	14.5	9.60
Ammonia	1,010	443
Fluoride	450	200
Oil & Grease	151	90.7
TSS	310	148
pH	Within the range of 7.5 to 10.0 at all times.	

(q) Sawing or Grinding Contact Cooling Water - BPT

Pollutant or pollutant property	Maximum for any one day	Maximum for monthly average
mg/off-kg (lb/million off-lbs) of zirconium-hafnium sawed or ground with contact cooling water		
Chromium	0.142	0.058
Cyanide	0.093	0.039
Nickel	0.617	0.408
Ammonia	42.8	18.8
Fluoride	19.1	8.48
Oil & Grease	6.42	3.85
TSS	13.2	6.26
pH	Within the range of 7.5 to 10.0 at all times.	

(r) Sawing or Grinding Rinse - BPT

Pollutant or pollutant property	Maximum for any one day	Maximum for monthly average
mg/off-kg (lb/million off-lbs) of sawed or ground zirconium-hafnium rinsed		
Chromium	0.792	0.324
Cyanide	0.522	0.216
Nickel	3.46	2.29
Ammonia	240	106
Fluoride	107	47.5
Oil & Grease	36.0	21.6
TSS	73.8	35.1
pH	Within the range of 7.5 to 10.0 at all times.	

(s) Sawing or Grinding Spent Neat Oils - BPT

There shall be no discharge of process wastewater pollutants.

(t) Inspection and Testing Wastewater - BPT

Pollutant or pollutant property	Maximum for any one day	Maximum for monthly average
mg/off-kg (lb/million off-lbs) of zirconium-hafnium tested		
Chromium	0.007	0.003
Cyanide	0.005	0.002
Nickel	0.030	0.020
Ammonia	2.06	0.903
Fluoride	0.917	0.407
Oil & Grease	0.308	0.185
TSS	0.632	0.301
pH	Within the range of 7.5 to 10.0 at all times.	

(a) Rolling Spent Neat Oils - BAT

There shall be no discharge of process wastewater pollutants.

(b) Drawing Spent Lubricants - BAT

There shall be no discharge of process wastewater pollutants.

(c) Extrusion Spent Emulsions - BAT

There shall be no discharge of process wastewater pollutants.

(d) Extrusion Press Hydraulic Fluid Leakage - BAT

Pollutant or pollutant property	Maximum for any one day	Maximum for monthly average
mg/off-kg (lb/million off-lbs) of zirconium-hafnium extruded		
Chromium	0.104	0.043
Cyanide	0.069	0.029
Nickel	0.455	0.301
Ammonia	31.6	13.9
Fluoride	14.1	6.26

(e) Swaging Spent Neat Oils - BAT

There shall be no discharge of process wastewater pollutants.

(f) Heat Treatment Contact Cooling Water - BAT

Pollutant or pollutant property	Maximum for any one day	Maximum for monthly average
mg/off-kg (lb/million off-lbs) of zirconium-hafnium heat treated		
Chromium	0.015	0.006
Cyanide	0.010	0.004
Nickel	0.066	0.044
Ammonia	4.57	2.01
Fluoride	2.04	0.906

(g) Tube Reducing Spent Lubricants - BAT

There shall be no discharge of process wastewater pollutants.

(h) Surface Treatment Spent Baths - BAT

Pollutant or pollutant property	Maximum for any one day	Maximum for monthly average
mg/off-kg (lb/million off-lbs) of zirconium-hafnium surface treated		
Chromium	0.150	0.061
Cyanide	0.099	0.041
Nickel	0.653	0.432
Ammonia	45.3	20.0
Fluoride	20.3	8.98

(i) Surface Treatment Rinse - BAT

Pollutant or pollutant property	Maximum for any one day	Maximum for monthly average
mg/off-kg (lb/million off-lbs) of zirconium-hafnium surface treated		
Chromium	0.391	0.160
Cyanide	0.258	0.107
Nickel	1.71	1.13
Ammonia	119	52.1
Fluoride	52.9	23.5

(j) Alkaline Cleaning Spent Baths - BAT

Pollutant or pollutant property	Maximum for any one day	Maximum for monthly average
mg/off-kg (lb/million off-lbs) of zirconium-hafnium alkaline cleaned		
Chromium	0.704	0.288
Cyanide	0.464	0.192
Nickel	3.07	2.03
Ammonia	214	93.8
Fluoride	95.2	42.3

(k) Alkaline Cleaning Rinse - BAT

Pollutant or pollutant property	Maximum for any one day	Maximum for monthly average
mg/off-kg (lb/million off-lbs) of zirconium-hafnium alkaline cleaned		
Chromium	1.380	0.565
Cyanide	0.911	0.377
Nickel	6.03	3.99
Ammonia	419	184
Fluoride	187	82.9

(l) Sawing or Grinding Spent Emulsions - BAT

Pollutant or pollutant property	Maximum for any one day	Maximum for monthly average
mg/off-kg (lb/million off-lbs) of zirconium-hafnium sawed or ground with emulsions		
Chromium	0.124	0.051
Cyanide	0.082	0.034
Nickel	0.540	0.357
Ammonia	37.5	16.5
Fluoride	16.7	7.42

(m) Wet Air Pollution Control Scrubber Blowdown - BAT

There shall be no allowance for the discharge of process wastewater pollutants.

(n) Degreasing Spent Solvents - BAT

There shall be no discharge of process wastewater pollutants.

(o) Degreasing Rinse - BAT

There shall be no discharge of process wastewater pollutants.

(p) Molten Salt Rinse - BAT

Pollutant or pollutant property	Maximum for any one day	Maximum for monthly average
mg/off-kg (lb/million off-lbs) of zirconium-hafnium rinsed following molten salt treatment		
Chromium	0.333	0.136
Cyanide	0.220	0.091
Nickel	1.45	0.960
Ammonia	101	44.3
Fluoride	45.0	20.0

(q) Sawing or Grinding Contact Cooling Water - BAT

Pollutant or pollutant property	Maximum for any one day	Maximum for monthly average
mg/off-kg (lb/million off-lbs) of zirconium-hafnium sawed or ground with contact cooling water		
Chromium	0.142	0.058
Cyanide	0.093	0.039
Nickel	0.617	0.408
Ammonia	42.8	18.8
Fluoride	19.1	8.48

(r) Sawing or Grinding Rinse - BAT

Pollutant or pollutant property	Maximum for any one day	Maximum for monthly average
mg/off-kg (lb/million off-lbs) of sawed or ground zirconium-hafnium rinsed		
Chromium	0.079	0.033
Cyanide	0.052	0.022
Nickel	0.346	0.229
Ammonia	24.0	10.6
Fluoride	10.7	4.75

(s) Sawing or Grinding Spent Neat Oils - BAT

There shall be no discharge of process wastewater pollutants.

(t) Inspection and Testing Wastewater - BAT

Pollutant or pollutant property	Maximum for any one day	Maximum for monthly average
mg/off-kg (lb/million off-lbs) of zirconium-hafnium tested		
Chromium	0.007	0.003
Cyanide	0.005	0.002
Nickel	0.030	0.020
Ammonia	2.06	0.903
Fluoride	0.917	0.407

SUBPART J: BPT AND BAT MASS LIMITATIONS FOR THE METAL POWDERS SUBCATEGORY

(a) Metal Powder Production Atomization Wastewater - BPT

Pollutant or pollutant property	Maximum for any one day	Maximum for monthly average
mg/off-kg (lb/million off-lbs) of powder wet atomized		
Copper	9.58	5.04
Cyanide	1.46	0.605
Lead	2.12	1.01
Oil & Grease	101	60.5
TSS	207	98.3
pH	Within the range of 7.5 to 10.0 at all times.	

(b) Sizing Spent Neat Oils - BPT

There shall be no discharge of process wastewater pollutants.

(c) Sizing Spent Emulsion - BPT

Pollutant or pollutant property	Maximum for any one day	Maximum for monthly average
mg/off-kg (lb/million off-lbs) of powder sized		
Copper	0.028	0.015
Cyanide	0.004	0.002
Lead	0.006	0.003
Oil & Grease	0.292	0.175
TSS	0.599	0.285
pH	Within the range of 7.5 to 10.0 at all times.	

(d) Oil-Resin Impregnation Wastewater - BPT

There shall be no discharge of process wastewater pollutants.

(e) Steam Treatment Wet Air Pollution Control Scrubber Blowdown - BPT

Pollutant or pollutant property	Maximum for any one day	Maximum for monthly average
mg/off-kg (lb/million off-lbs) of powder metallurgy parts steam treated		
Copper	1.51	0.792
Cyanide	0.230	0.095
Lead	0.333	0.159
Oil & Grease	15.9	9.51
TSS	32.5	15.5
pH	Within the range of 7.5 to 10.0 at all times.	

(f) Tumbling, Burnishing and Cleaning Wastewater - BPT

Pollutant or pollutant property	Maximum for any one day	Maximum for monthly average
mg/off-kg (lb/million off-lbs) of powder metallurgy parts tumbled, burnished, or cleaned		
Copper	8.36	4.40
Cyanide	1.28	0.528
Lead	1.85	0.880
Oil & Grease	88.0	52.800
TSS	181	85.8
pH	Within the range of 7.5 to 10.0 at all times.	

(g) Sawing or Grinding Spent Neat Oils - BPT

There shall be no discharge of process wastewater pollutants.

(h) Sawing or Grinding Spent Emulsion - BPT

Pollutant or pollutant property	Maximum for any one day	Maximum for monthly average
mg/off-kg (lb/million off-lbs) of powder metallurgy parts sawed or ground with emulsion		
Copper	0.035	0.018
Cyanide	0.005	0.002
Lead	0.008	0.004
Oil & Grease	0.362	0.217
TSS	0.742	0.353
pH	Within the range of 7.5 to 10.0 at all times.	

(i) Sawing or Grinding Contact Cooling Water - BPT

Pollutant or pollutant property	Maximum for any one day	Maximum for monthly average
mg/off-kg (lb/million off-lbs) of powder metallurgy parts sawed or ground with contact cooling		
Copper	3.08	1.62
Cyanide	0.470	0.195
Lead	0.681	0.324
Oil & Grease	32.4	19.5
TSS	66.4	31.6
pH	Within the range of 7.5 to 10.0 at all times.	

(j) Hot Pressing Contact Cooling Water - BPT

Pollutant or pollutant property	Maximum for any one day	Maximum for monthly average
mg/off-kg (lb/million off-lbs) of powder cooled after pressing		
Copper	16.7	8.80
Cyanide	2.55	1.06
Lead	3.70	1.76
Oil & Grease	176	106
TSS	361	172
pH	Within the range of 7.5 to 10.0 at all times.	

(k) Mixing Wet Air Pollution Control Scrubber Blowdown - BPT

Pollutant or pollutant property	Maximum for any one day	Maximum for monthly average
mg/off-kg (lb/million off-lbs) of powder mixed		
Copper	15.0	7.90
Cyanide	2.29	0.948
Lead	3.32	1.58
Oil & Grease	158	94.8
TSS	324	154
pH	Within the range of 7.5 to 10.0 at all times.	

(l) Degreasing Spent Solvents - BPT

There shall be no discharge of process wastewater pollutants.

(a) Metal Powder Production Atomization Wastewater - BAT

Pollutant or pollutant property	Maximum for any one day	Maximum for monthly average
mg/off-kg (lb/million off-lbs) of powder wet atomized		
Copper	9.58	5.04
Cyanide	1.46	0.605
Lead	2.12	1.01

(b) Sizing Spent Neat Oils - BAT

There shall be no discharge of process wastewater pollutants.

(c) Sizing Spent Emulsions - BAT

Pollutant or pollutant property	Maximum for any one day	Maximum for monthly average
mg/off-kg (lb/million off-lbs) of powder sized		
Copper	0.028	0.015
Cyanide	0.004	0.002
Lead	0.006	0.003

(d) Oil-Resin Impregnation Wastewater - BAT

There shall be no discharge of process wastewater pollutants.

(e) Steam Treatment Wet Air Pollution Control Scrubber Blowdown - BAT

Pollutant or pollutant property	Maximum for any one day	Maximum for monthly average
mg/off-kg (lb/million off-lbs) of powder metallurgy parts steam treated		
Copper	1.51	0.792
Cyanide	0.230	0.095
Lead	0.333	0.159

(f) Tumbling, Burnishing and Cleaning Wastewater - BAT

Pollutant or pollutant property	Maximum for any one day	Maximum for monthly average
mg/off-kg (lb/million off-lbs) of powder metallurgy parts tumbled, burnished, or cleaned		
Copper	8.36	4.40
Cyanide	1.28	0.528
Lead	1.85	0.880

(g) Sawing or Grinding Spent Neat Oils - BAT

There shall be no discharge of process wastewater pollutants.

(h) Sawing or Grinding Spent Emulsions - BAT

Pollutant or pollutant property	Maximum for any one day	Maximum for monthly average
mg/off-kg (lb/million off-lbs) of powder metallurgy parts sawed or ground with emulsions		
Copper	0.035	0.018
Cyanide	0.005	0.002
Lead	0.008	0.004

(i) Sawing or Grinding Contact Cooling Water - BAT

Pollutant or pollutant property	Maximum for any one day	Maximum for monthly average
mg/off-kg (lb/million off-lbs) of powder sawed or ground with contact cooling		
Copper	3.08	1.62
Cyanide	0.470	0.195
Lead	0.681	0.324

(j) Hot Pressing Contact Cooling Water - BAT

Pollutant or pollutant property	Maximum for any one day	Maximum for monthly average
mg/off-kg (lb/million off-lbs) of powder cooled after pressing		
Copper	16.7	8.80
Cyanide	2.55	1.06
Lead	3.70	1.760

(k) Mixing Wet Air Pollution Control Scrubber Blowdown - BAT

Pollutant or pollutant property	Maximum for any one day	Maximum for monthly average
mg/off-kg (lb/million off-lbs) of powder mixed		
Copper	15.0	7.90
Cyanide	2.29	0.948
Lead	3.32	1.58

(l) Degreasing Spent Solvents - BAT

There shall be no discharge of process wastewater pollutants.

4. NSPS is being promulgated based on the model treatment technology of flow equalization, oil skimming, chemical precipitation, sedimentation, and filtration (lime, settle, and

filter) technology, and in-process flow reduction control methods, and where appropriate, ammonia steam stripping, chemical emulsion breaking, chromium reduction, and cyanide precipitation for the magnesium, nickel-cobalt, refractory metals, uranium, and zinc forming subcategories. Iron coprecipitation is included in this model treatment technology for removal of the pollutant molybdenum from wastewaters in the refractory metals and uranium forming subcategories. NSPS is being promulgated based on the model treatment technology of flow equalization, oil skimming, chemical precipitation and sedimentation (lime and settle) technology, and in-process flow reduction control methods, and where appropriate, ammonia steam stripping, chemical emulsion breaking, chromium reduction, and cyanide precipitation for the lead-tin-bismuth, precious metals, titanium, and zirconium-hafnium forming subcategories and the metal powders subcatetory. The following effluent standards are being promulgated for new sources:

SUBPART A: NEW SOURCE PERFORMANCE STANDARDS FOR THE LEAD-TIN-BISMUTH FORMING SUBCATEGORY

(a) Rolling Spent Emulsions - NSPS

Pollutant or pollutant property	Maximum for any one day	Maximum for monthly average
mg/off-kg (lb/million off-lbs) of lead-tin-bismuth rolled with emulsions		
Antimony	0.067	0.030
Lead	0.010	0.005
Oil & Grease	0.468	0.281
TSS	0.960	0.457
pH	Within the range of 7.5 to 10.0 at all times	

(b) Rolling Spent Soap Solutions - NSPS

Pollutant or pollutant property	Maximum for any one day	Maximum for monthly average
mg/off-kg (lb/million off-lbs) of lead-tin-bismuth rolled with soap solutions		
Antimony	0.124	0.055
Lead	0.018	0.009
Oil & Grease	0.860	0.520
TSS	1.80	0.840
pH	Within the range of 7.5 to 10.0 at all times	

(c) Drawing Spent Neat Oils - NSPS

There shall be no discharge of process wastewater pollutants.

(d) Drawing Spent Emulsions - NSPS

Pollutant or pollutant property	Maximum for any one day	Maximum for monthly average
mg/off-kg (lb/million off-lbs) of lead-tin-bismuth drawn with emulsions		
Antimony	0.076	0.034
Lead	0.011	0.005
Oil & Grease	0.526	0.316
TSS	1.087	0.513
pH	Within the range of 7.5 to 10.0 at all times	

(e) Drawing Spent Soap Solutions - NSPS

Pollutant or pollutant property	Maximum for any one day	Maximum for monthly average
mg/off-kg (lb/million off-lbs) of lead-tin-bismuth drawn with soap solutions		
Antimony	0.022	0.010
Lead	0.003	0.002
Oil & Grease	0.149	0.090
TSS	0.306	0.146
pH	Within the range of 7.5 to 10.0 at all times	

(f) Extrusion Press and Solution Heat Treatment Contact Cooling Water - NSPS

Pollutant or pollutant property	Maximum for any one day	Maximum for monthly average
mg/off-kg (lb/million off-lbs) of lead-tin-bismuth heat treated		
Antimony	0.414	0.185
Lead	0.061	0.030
Oil & Grease	2.88	1.73
TSS	5.91	2.81
pH	Within the range of 7.5 to 10.0 at all times	

(g) Extrusion Press Hydraulic Fluid Leakage - NSPS

Pollutant or pollutant property	Maximum for any one day	Maximum for monthly average
mg/off-kg (lb/million off-lbs) of lead-tin-bismuth extruded		
Antimony	0.158	0.071
Lead	0.023	0.011
Oil & Grease	1.10	0.660
TSS	2.26	1.07
pH	Within the range of 7.5 to 10.0 at all times	

(h) Continuous Strip Casting Contact Cooling Water - NSPS

Pollutant or pollutant property	Maximum for any one day	Maximum for monthly average
mg/off-kg (lb/million off-lbs) of lead-tin-bismuth cast by the continuous strip method		
Antimony	0.003	0.001
Lead	0.0004	0.0002
Oil & Grease	0.020	0.012
TSS	0.041	0.020
pH	Within the range of 7.5 to 10.0 at all times	

(i) Semi-Continuous Ingot Casting Contact Cooling Water - NSPS

Pollutant or pollutant property	Maximum for any one day	Maximum for monthly average
mg/off-kg (lb/million off-lbs) of lead-tin-bismuth ingot cast by the semi-continuous method		
Antimony	0.009	0.004
Lead	0.001	0.0006
Oil & Grease	0.059	0.036
TSS	0.121	0.058
pH	Within the range of 7.5 to 10.0 at all times	

(j) Shot Casting Contact Cooling Water - NSPS

Pollutant or pollutant property	Maximum for any one day	Maximum for monthly average
mg/off-kg (lb/million off-lbs) of lead-tin-bismuth shot cast		
Antimony	0.107	0.048
Lead	0.016	0.008
Oil & Grease	0.746	0.448
TSS	1.53	0.728
pH	Within the range of 7.5 to 10.0 at all times	

(k) Shot-Forming Wet Air Pollution Control Scrubber Blowdown - NSPS

Pollutant or pollutant property	Maximum for any one day	Maximum for monthly average
mg/off-kg (lb/million off-lbs) of lead-tin-bismuth shot formed		
Antimony	0.169	0.076
Lead	0.025	0.012
Oil & Grease	1.18	0.706
TSS	2.41	1.15
pH	Within the range of 7.5 to 10.0 at all times	

(l) Alkaline Cleaning Spent Baths - NSPS

Pollutant or pollutant property	Maximum for any one day	Maximum for monthly average
mg/off-kg (lb/million off-lbs) of lead-tin-bismuth alkaline cleaned		
Antimony	0.345	0.154
Lead	0.051	0.024
Oil & Grease	2.40	1.44
TSS	4.92	2.34
pH	Within the range of 7.5 to 10.0 at all times	

(m) Alkaline Cleaning Rinse - NSPS

Pollutant or pollutant property	Maximum for any one day	Maximum for monthly average
mg/off-kg (lb/million off-lbs) of lead-tin-bismuth alkaline cleaned		
Antimony	0.678	0.302
Lead	0.099	0.047
Oil & Grease	4.72	2.84
TSS	9.68	4.60
pH	Within the range of 7.5 to 10.0 at all times	

(n) Swaging Spent Emulsions - NSPS

Pollutant or pollutant property	Maximum for any one day	Maximum for monthly average
mg/off-kg (lb/million off-lbs) of lead-tin-bismuth swaged with emulsion		
Antimony	0.005	0.002
Lead	0.0008	0.0004
Oil & Grease	0.036	0.022
TSS	0.073	0.035
pH	Within the range of 7.5 to 10.0 at all times	

(o) Degreasing Spent Solvents - NSPS

There shall be no discharge of process wastewater pollutants.

SUBPART B: NEW SOURCE PERFORMANCE STANDARDS FOR THE MAGNESIUM FORMING SUBCATEGORY

(a) Rolling Spent Emulsions - NSPS

Pollutant or pollutant property	Maximum for any one day	Maximum for monthly average
mg/off-kg (lb/million off-lbs) of magnesium rolled with emulsions		
Chromium	0.028	0.011
Zinc	0.076	0.032
Ammonia	9.95	4.37
Fluoride	4.44	1.97
Oil & Grease	0.746	0.746
TSS	1.12	0.895
pH	Within the range of 7.5 to 10.0 at all times	

(b) Forging Spent Lubricants - NSPS

There shall be no discharge of process wastewater pollutants.

(c) Forging Contact Cooling Water - NSPS

Pollutant or pollutant property	Maximum for any one day	Maximum for monthly average
mg/off-kg (lb/million off-lbs) of forged magnesium cooled with water		
Chromium	0.107	0.044
Zinc	0.295	0.122
Ammonia	38.5	17.0
Fluoride	17.2	7.63
Oil & Grease	2.89	2.89
TSS	4.34	3.47
pH	Within the range of 7.5 to 10.0 at all times	

(d) Forging Equipment Cleaning Wastewater - NSPS

Pollutant or pollutant property	Maximum for any one day	Maximum for monthly average
mg/off-kg (lb/million off-lbs) of magnesium forged		
Chromium	0.002	0.0006
Zinc	0.004	0.002
Ammonia	0.532	0.234
Fluoride	0.238	0.106
Oil & Grease	0.040	0.040
TSS	0.060	0.048
pH	Within the range of 7.5 to 10.0 at all times	

(e) Direct Chill Casting Contact Cooling Water - NSPS

Pollutant or pollutant property	Maximum for any one day	Maximum for monthly average
mg/off-kg (lb/million off-lbs) of magnesium cast with direct chill methods		
Chromium	1.46	0.593
Zinc	4.03	1.66
Ammonia	527	232
Fluoride	235	105
Oil & Grease	39.5	39.5
TSS	59.3	47.4
pH	Within the range of 7.5 to 10.0 at all times	

(f) Surface Treatment Spent Baths - NSPS

Pollutant or pollutant property	Maximum for any one day	Maximum for monthly average
mg/off-kg (lb/million off-lbs) of magnesium surface treated		
Chromium	0.173	0.070
Zinc	0.476	0.196
Ammonia	62.1	27.3
Fluoride	27.8	12.3
Oil & Grease	4.66	4.66
TSS	6.99	5.60
pH	Within the range of 7.5 to 10.0 at all times	

(g) Surface Treatment Rinse - NSPS

Pollutant or pollutant property	Maximum for any one day	Maximum for monthly average
mg/off-kg (lb/million off-lbs) of magnesium surface treated		
Chromium	0.700	0.284
Zinc	1.93	0.794
Ammonia	252	111
Fluoride	113	49.9
Oil & Grease	18.9	18.9
TSS	28.4	22.7
pH	Within the range of 7.5 to 10.0 at all times	

(h) Sawing or Grinding Spent Emulsions - NSPS

Pollutant or pollutant property	Maximum for any one day	Maximum for monthly average
mg/off-kg (lb/million off-lbs) of magnesium sawed or ground		
Chromium	0.007	0.003
Zinc	0.020	0.008
Ammonia	2.60	1.15
Fluoride	1.16	0.515
Oil & Grease	0.195	0.195
TSS	0.293	0.234
pH	Within the range of 7.5 to 10.0 at all times	

(i) Degreasing Spent Solvents - NSPS

There shall be no discharge of process wastewater pollutants.

(j) Wet Air Pollution Control Scrubber Blowdown - NSPS

Pollutant or pollutant property	Maximum for any one day	Maximum for monthly average
mg/off-kg (lb/million off-lbs) of magnesium sanded and repaired or forged		
Chromium	0.229	0.093
Zinc	0.632	0.260
Ammonia	82.5	36.3
Fluoride	36.9	16.4
Oil & Grease	6.19	6.19
TSS	9.29	7.43
pH	Within the range of 7.5 to 10.0 at all times	

SUBPART C: NEW SOURCE PERFORMANCE STANDARDS FOR THE NICKEL-COBALT FORMING SUBCATEGORY

(a) Rolling Spent Neat Oils - NSPS

There shall be no discharge of process wastewater pollutants.

(b) Rolling Spent Emulsions - NSPS

Pollutant or pollutant property	Maximum for any one day	Maximum for monthly average
mg/off-kg (lb/million off-lbs) of nickel-cobalt rolled with emulsions		
Chromium	0.063	0.026
Nickel	0.094	0.063
Fluoride	10.1	4.49
Oil & Grease	1.70	1.70
TSS	2.55	2.04
pH	Within the range of 7.5 to 10.0 at all times	

(c) Rolling Contact Cooling Water - NSPS

Pollutant or pollutant property	Maximum for any one day	Maximum for monthly average
mg/off-kg (lb/million off-lbs) of nickel-cobalt rolled with water		
Chromium	0.028	0.012
Nickel	0.042	0.028
Fluoride	4.49	1.99
Oil & Grease	0.754	0.754
TSS	1.13	0.905
pH	Within the range of 7.5 to 10.0 at all times	

(d) Tube Reducing Spent Lubricant - NSPS

There shall be no discharge of process wastewater pollutants.

(e) Drawing Spent Neat Oils - NSPS

There shall be no discharge of process wastewater pollutants.

(f) Drawing Spent Emulsions - NSPS

Pollutant or pollutant property	Maximum for any one day	Maximum for monthly average
mg/off-kg (lb/million off-lbs) of nickel-cobalt drawn with emulsions		
Chromium	0.036	0.015
Nickel	0.053	0.036
Fluoride	5.68	2.52
Oil & Grease	0.954	0.954
TSS	1.43	1.15
pH	Within the range of 7.5 to 10.0 at all times	

(g) Extrusion Spent Lubricants - NSPS

There shall be no discharge of process wastewater pollutants.

(h) Extrusion Press or Solution Heat Treatment Contact Cooling Water - NSPS

Pollutant or pollutant property	Maximum for any one day	Maximum for monthly average
mg/off-kg (lb/million off-lbs) of extruded nickel-cobalt heat treated		
Chromium	0.031	0.013
Nickel	0.046	0.031
Fluoride	4.95	2.20
Oil & Grease	0.832	0.832
TSS	1.25	0.999
pH	Within the range of 7.5 to 10.0 at all times	

(i) Extrusion Press Hydraulic Fluid Leakage - NSPS

Pollutant or pollutant property	Maximum for any one day	Maximum for monthly average
mg/off-kg (lb/million off-lbs) of nickel-cobalt extruded		
Chromium	0.086	0.035
Nickel	0.128	0.086
Fluoride	13.8	6.13
Oil & Grease	2.32	2.32
TSS	3.48	2.79
pH	Within the range of 7.5 to 10.0 at all times	

(j) Forging Equipment Cleaning Wastewater - NSPS

Pollutant or pollutant property	Maximum for any one day	Maximum for monthly average
mg/off-kg (lb/million off-lbs) of nickel-cobalt forged		
Chromium	0.002	0.0006
Nickel	0.002	0.002
Fluoride	0.238	0.106
Oil & Grease	0.040	0.040
TSS	0.060	0.048
pH	Within the range of 7.5 to 10.0 at all times	

(k) Forging Contact Cooling Water - NSPS

Pollutant or pollutant property	Maximum for any one day	Maximum for monthly average
mg/off-kg (lb/million off-lbs) of forged nickel-cobalt cooled with water		
Chromium	0.018	0.007
Nickel	0.026	0.018
Fluoride	2.82	1.25
Oil & Grease	0.474	0.474
TSS	0.711	0.569
pH	Within the range of 7.5 to 10.0 at all times	

(l) Forging Press Hydraulic Fluid Leakage - NSPS

Pollutant or pollutant property	Maximum for any one day	Maximum for monthly average
mg/off-kg (lb/million off-lbs) of nickel-cobalt forged		
Chromium	0.069	0.028
Nickel	0.103	0.069
Fluoride	11.2	4.94
Oil & Grease	1.87	1.87
TSS	2.81	2.25
pH	Within the range of 7.5 to 10.0 at all times	

(m) Forging Spent Lubricants - NSPS

There shall be no discharge of process wastewater pollutants.

(n) Stationary Casting Contact Cooling Water - NSPS

Pollutant or pollutant property	Maximum for any one day	Maximum for monthly average
mg/off-kg (lb/million off-lbs) of nickel-cobalt cast with stationary casting methods		
Chromium	0.448	0.182
Nickel	0.666	0.448
Fluoride	72.0	32.0
Oil & Grease	12.1	12.1
TSS	18.2	14.5
pH	Within the range of 7.5 to 10.0 at all times	

(o) Vacuum Melting Steam Condensate - NSPS

There shall be no allowance for the discharge of process wastewater pollutants.

(p) Metal Powder Production Atomization Wastewater - NSPS

Pollutant or pollutant property	Maximum for any one day	Maximum for monthly average
mg/off-kg (lb/million off-lbs) of nickel-cobalt metal powder atomized		
Chromium	0.970	0.393
Nickel	1.44	0.970
Fluoride	156	69.2
Oil & Grease	26.2	26.2
TSS	39.3	31.5
pH	Within the range of 7.5 to 10.0 at all times	

(q) Annealing and Solution Heat Treatment Contact Cooling Water - NSPS

There shall be no allowance for the discharge of process wastewater pollutants.

(r) Wet Air Pollution Control Scrubber Blowdown - NSPS

Pollutant or pollutant property	Maximum for any one day	Maximum for monthly average
mg/off-kg (lb/million off-lbs) of nickel-cobalt formed		
Chromium	0.300	0.122
Nickel	0.450	0.300
Fluoride	48.2	21.4
Oil & Grease	8.1	8.1
TSS	12.2	9.72
pH	Within the range of 7.5 to 10.0 at all times	

(s) Surface Treatment Spent Baths - NSPS

Pollutant or pollutant property	Maximum for any one day	Maximum for monthly average
mg/off-kg (lb/million off-lbs) of nickel-cobalt surface treated		
Chromium	0.346	0.141
Nickel	0.515	0.346
Fluoride	55.7	24.7
Oil & Grease	9.35	9.35
TSS	14.1	11.2
pH	Within the range of 7.5 to 10.0 at all times	

(t) Surface Treatment Rinse - NSPS

Pollutant or pollutant property	Maximum for any one day	Maximum for monthly average
mg/off-kg (lb/million off-lbs) of nickel-cobalt surface treated		
Chromium	0.874	0.354
Nickel	1.30	0.873
Fluoride	141	62.3
Oil & Grease	23.6	23.6
TSS	35.4	28.3
pH	Within the range of 7.5 to 10.0 at all times	

(u) Alkaline Cleaning Spent Baths - NSPS

Pollutant or pollutant property	Maximum for any one day	Maximum for monthly average
mg/off-kg (lb/million off-lbs) of nickel-cobalt alkaline cleaned		
Chromium	0.013	0.005
Nickel	0.019	0.013
Fluoride	2.02	0.895
Oil & Grease	0.339	0.339
TSS	0.509	0.407
pH	Within the range of 7.5 to 10.0 at all times	

(v) Alkaline Cleaning Rinse - NSPS

Pollutant or pollutant property	Maximum for any one day	Maximum for monthly average
mg/off-kg (lb/million off-lbs) of nickel-cobalt alkaline cleaned		
Chromium	0.086	0.035
Nickel	0.128	0.086
Fluoride	13.9	6.15
Oil & Grease	2.33	2.33
TSS	3.50	2.80
pH	Within the range of 7.5 to 10.0 at all times	

(w) Molten Salt Rinse - NSPS

Pollutant or pollutant property	Maximum for any one day	Maximum for monthly average
mg/off-kg (lb/million off-lbs) of nickel-cobalt treated with molten salt		
Chromium	0.312	0.127
Nickel	0.464	0.312
Fluoride	50.2	22.3
Oil & Grease	8.44	8.44
TSS	12.7	10.1
pH	Within the range of 7.5 to 10.0 at all times	

(x) Ammonia Rinse - NSPS

Pollutant or pollutant property	Maximum for any one day	Maximum for monthly average
mg/off-kg (lb/million off-lbs) of nickel-cobalt treated with ammonia solution		
Chromium	0.006	0.002
Nickel	0.008	0.006
Fluoride	0.881	0.391
Oil & Grease	0.148	0.148
TSS	0.222	0.178
pH	Within the range of 7.5 to 10.0 at all times	

(y) Sawing or Grinding Spent Emulsions - NSPS

Pollutant or pollutant property	Maximum for any one day	Maximum for monthly average
mg/off-kg (lb/million off-lbs) of sawed or ground nickel-cobalt rinsed		
Chromium	0.015	0.006
Nickel	0.022	0.015
Fluoride	2.35	1.04
Oil & Grease	0.394	0.394
TSS	0.591	0.473
pH	Within the range of 7.5 to 10.0 at all times	

(z) Sawing or Grinding Rinse - NSPS

Pollutant or pollutant property	Maximum for any one day	Maximum for monthly average
mg/off-kg (lb/million off-lbs) of nickel-cobalt sawed or ground		
Chromium	0.067	0.027
Nickel	0.100	0.067
Fluoride	10.8	4.78
Oil & Grease	1.81	1.81
TSS	2.72	2.17
pH	Within the range of 7.5 to 10.0 at all times	

(aa) Steam Cleaning Condensate - NSPS

Pollutant or pollutant property	Maximum for any one day	Maximum for monthly average
mg/off-kg (lb/million off-lbs) of nickel-cobalt steam cleaned		
Chromium	0.011	0.005
Nickel	0.017	0.011
Fluoride	1.79	0.795
Oil & Grease	0.301	0.301
TSS	0.452	0.361
pH	Within the range of 7.5 to 10.0 at all times	

(ab) Hydrostatic Tube Testing and Ultrasonic Testing Wastewater - NSPS

There shall be no discharge of process wastewater pollutants.

(ac) Degreasing Spent Solvents - NSPS

There shall be no discharge of process wastewater pollutants.

(ad) Dye Penetrant Testing Wastewater - NSPS

Pollutant or pollutant property	Maximum for any one day	Maximum for monthly average
mg/off-kg (lb/million off-lbs) of nickel cobalt tested with dye penetrant method		
Chromium	0.079	0.032
Nickel	0.117	0.079
Fluoride	12.7	5.63
Oil & Grease	2.13	2.13
TSS	3.20	2.56
pH	Within the range of 7.5 to 10.0 at all times	

(ae) Electrocoating Rinse - NSPS

Pollutant or pollutant property	Maximum for any one day	Maximum for monthly average
mg/off-kg (lb/million off-lbs) of nickel-cobalt electrocoated		
Chromium	1.25	0.506
Nickel	1.86	1.25
Fluoride	201	89.0
Oil & Grease	33.7	33.7
TSS	50.6	40.5
pH	Within the range of 7.5 to 10.0 at all times	

(af) Miscellaneous Wastewater Sources - NSPS

Pollutant or pollutant property	Maximum for any one day	Maximum for monthly average
mg/off-kg (lb/million off-lbs) of nickel-cobalt formed		
Chromium	0.091	0.037
Nickel	0.136	0.091
Fluoride	14.7	6.50
Oil & Grease	2.46	2.46
TSS	3.69	2.95
pH	Within the range of 7.5 to 10.0 at all times	

SUBPART D: NEW SOURCE PERFORMANCE STANDARDS FOR THE PRECIOUS METALS FORMING SUBCATEGORY

(a) Rolling Spent Neat Oils - NSPS

There shall be no discharge of process wastewater pollutants.

(b) Rolling Spent Emulsions - NSPS

Pollutant or pollutant property	Maximum for any one day	Maximum for monthly average
mg/off-kg (lb/million off-lbs) of precious metals rolled with emulsions		
Cadmium	0.026	0.012
Copper	0.147	0.077
Cyanide	0.023	0.010
Silver	0.032	0.013
Oil & Grease	1.54	0.925
TSS	3.16	1.51
pH	Within the range of 7.5 to 10.0 at all times	

(c) Drawing Spent Neat Oils - NSPS

There shall be no discharge of process wastewater pollutants.

(d) Drawing Spent Emulsions - NSPS

Pollutant or pollutant property	Maximum for any one day	Maximum for monthly average
mg/off-kg (lb/million off-lbs) of precious metals drawn with emulsions		
Cadmium	0.017	0.007
Copper	0.091	0.048
Cyanide	0.014	0.006
Silver	0.020	0.008
Oil & Grease	0.950	0.570
TSS	1.95	0.927
pH	Within the range of 7.5 to 10.0 at all times	

(e) Drawing Spent Soap Solutions - NSPS

Pollutant or pollutant property	Maximum for any one day	Maximum for monthly average
mg/off-kg (lb/million off-lbs) of precious metals drawn with soap solutions		
Cadmium	0.001	0.0005
Copper	0.006	0.003
Cyanide	0.0009	0.0004
Silver	0.002	0.0006
Oil & Grease	0.063	0.038
TSS	0.128	0.061
pH	Within the range of 7.5 to 10.0 at all times	

(f) Metal Powder Production Atomization Wastewater - NSPS

Pollutant or pollutant property	Maximum for any one day	Maximum for monthly average
mg/off-kg (lb/million off-lbs) of precious metals powder wet atomized		
Cadmium	2.27	1.00
Copper	12.7	6.68
Cyanide	1.94	0.802
Silver	2.74	1.14
Oil & Grease	134	80.2
TSS	274	131
pH	Within the range of 7.5 to 10.0 at all times	

(g) Heat Treatment Contact Cooling Water - NSPS

Pollutant or pollutant property	Maximum for any one day	Maximum for monthly average
mg/off-kg (lb/million off-lbs) of precious metals heat treated		
Cadmium	0.142	0.063
Copper	0.793	0.417
Cyanide	0.121	0.050
Silver	0.171	0.071
Oil & Grease	8.34	5.01
TSS	17.1	8.13
pH	Within the range of 7.5 to 10.0 at all times	

(h) Semi-Continuous and Continuous Casting Contact Cooling Water - NSPS

Pollutant or pollutant property	Maximum for any one day	Maximum for monthly average
mg/off-kg (lb/million off-lbs) of precious metals cast by the semi-continuous or continuous method		
Cadmium	0.350	0.155
Copper	1.96	1.03
Cyanide	0.299	0.124
Silver	0.423	0.175
Oil & Grease	20.6	12.4
TSS	42.3	20.1
pH	Within the range of 7.5 to 10.0 at all times	

(i) Stationary Casting Contact Cooling Water - NSPS

There shall be no discharge of process wastewater pollutants.

(j) Direct Chill Casting Contact Cooling Water - NSPS

Pollutant or pollutant property	Maximum for any one day	Maximum for monthly average
mg/off-kg (lb/million off-lbs) of precious metals cast by the direct chill method		
Cadmium	0.367	0.162
Copper	2.05	1.08
Cyanide	0.313	0.130
Silver	0.443	0.184
Oil & Grease	21.6	13.0
TSS	44.3	21.1
pH	Within the range of 7.5 to 10.0 at all times	

(k) Shot Casting Contact Cooling Water - NSPS

Pollutant or pollutant property	Maximum for any one day	Maximum for monthly average
mg/off-kg (lb/million off-lbs) of precious metals shot cast		
Cadmium	0.125	0.055
Copper	0.698	0.367
Cyanide	0.107	0.044
Silver	0.151	0.063
Oil & Grease	7.34	4.41
TSS	15.1	7.16
pH	Within the range of 7.5 to 10.0 at all times	

(l) Wet Air Pollution Control Scrubber Blowdown - NSPS

There shall be no discharge of process wastewater pollutants.

(m) Pressure Bonding Contact Cooling Water - NSPS

Pollutant or pollutant property	Maximum for any one day	Maximum for monthly average
mg/off-kg (lb/million off-lbs) of precious metal and base metal pressure bonded		
Cadmium	0.029	0.013
Copper	0.159	0.084
Cyanide	0.024	0.010
Silver	0.034	0.014
Oil & Grease	1.67	1.00
TSS	3.43	1.63
pH	Within the range of 7.5 to 10.0 at all times	

(n) Surface Treatment Spent Baths - NSPS

Pollutant or pollutant property	Maximum for any one day	Maximum for monthly average
mg/off-kg (lb/million off-lbs) of precious metals surface treated		
Cadmium	0.033	0.015
Copper	0.183	0.097
Cyanide	0.028	0.012
Silver	0.040	0.017
Oil & Grease	1.93	1.16
TSS	3.95	1.88
pH	Within the range of 7.5 to 10.0 at all times	

(o) Surface Treatment Rinse - NSPS

Pollutant or pollutant property	Maximum for any one day	Maximum for monthly average
mg/off-kg (lb/million off-lbs) of precious metals surface treated		
Cadmium	0.210	0.093
Copper	1.17	0.616
Cyanide	0.179	0.074
Silver	0.253	0.105
Oil & Grease	12.3	7.39
TSS	25.3	12.0
pH	Within the range of 7.5 to 10.0 at all times	

(p) Alkaline Cleaning Spent Baths - NSPS

Pollutant or pollutant property	Maximum for any one day	Maximum for monthly average
mg/off-kg (lb/million off-lbs) of precious metals alkaline cleaned		
Cadmium	0.021	0.009
Copper	0.114	0.060
Cyanide	0.018	0.007
Silver	0.025	0.010
Oil & Grease	1.20	0.720
TSS	2.46	1.17
pH	Within the range of 7.5 to 10.0 at all times	

(q) Alkaline Cleaning Rinse - NSPS

Pollutant or pollutant property	Maximum for any one day	Maximum for monthly average
mg/off-kg (lb/million off-lbs) of precious metals alkaline cleaned		
Cadmium	0.381	0.168
Copper	2.13	1.12
Cyanide	0.325	0.135
Silver	0.459	0.191
Oil & Grease	22.4	13.5
TSS	45.9	21.9
pH	Within the range of 7.5 to 10.0 at all times	

(r) Alkaline Cleaning Pre-Bonding Wastewater - NSPS

Pollutant or pollutant property	Maximum for any one day	Maximum for monthly average
mg/off-kg (lb/million off-lbs) of precious metal and base metal cleaned prior to bonding		
Cadmium	0.400	0.174
Copper	2.21	1.16
Cyanide	0.337	0.139
Silver	0.476	0.197
Oil & Grease	23.2	13.9
TSS	47.6	22.6
pH	Within the range of 7.5 to 10.0 at all times	

(s) Tumbling or Burnishing Wastewater - NSPS

Pollutant or pollutant property	Maximum for any one day	Maximum for monthly average
mg/off-kg (lb/million off-lbs) of precious metals tumbled or burnished		
Cadmium	0.412	0.182
Copper	2.30	1.21
Cyanide	0.351	0.145
Silver	0.496	0.206
Oil & Grease	24.2	14.5
TSS	49.6	23.6
pH	Within the range of 7.5 to 10.0 at all times	

(t) Sawing or Grinding Spent Neat Oils - NSPS

There shall be no discharge of process wastewater pollutants.

(u) Sawing or Grinding Spent Emulsions - NSPS

Pollutant or pollutant property	Maximum for any one day	Maximum for monthly average
mg/off-kg (lb/million off-lbs) of precious metals sawed or ground with emulsions		
Cadmium	0.032	0.014
Copper	0.178	0.094
Cyanide	0.027	0.011
Silver	0.038	0.016
Oil & Grease	1.87	1.12
TSS	3.83	1.82
pH	Within the range of 7.5 to 10.0 at all times	

(v) Degreasing Spent Solvents - NSPS

There shall be no discharge of process wastewater pollutants.

SUBPART E: NEW SOURCE PERFORMANCE STANDARDS FOR THE REFRACTORY METALS FORMING SUBCATEGORY

(a) Rolling Spent Neat Oils and Graphite Based Lubricants - NSPS

There shall be no discharge of process wastewater pollutants.

(b) Rolling Spent Emulsions - NSPS

Pollutant or pollutant property	Maximum for any one day	Maximum for monthly average
mg/off-kg (lb/million off-lbs) of refractory metals rolled with emulsions		
Copper	0.549	0.262
Nickel	0.236	0.159
Fluoride	25.5	11.3
Molybdenum	2.16	0.957
Oil & Grease	4.29	4.29
TSS	6.44	5.15
pH	Within the range of 7.5 to 10.0 at all times	

(c) Drawing Spent Lubricants - NSPS

There shall be no discharge of process wastewater pollutants.

(d) Extrusion Spent Lubricants - NSPS

There shall be no discharge of process wastewater pollutants.

(e) Extrusion Press Hydraulic Fluid Leakage - NSPS

Pollutant or pollutant property	Maximum for any one day	Maximum for monthly average
mg/off-kg (lb/million off-lbs) of refractory metals extruded		
Copper	1.53	0.726
Nickel	0.655	0.441
Fluoride	70.8	31.4
Molybdenum	5.99	2.66
Oil & Grease	11.9	11.9
TSS	17.9	14.3
pH	Within the range of 7.5 to 10.0 at all times	

(f) Forging Spent Lubricants - NSPS

There shall be no discharge of process wastewater pollutants.

(g) Forging Contact Cooling Water - NSPS

Pollutant or pollutant property	Maximum for any one day	Maximum for monthly average
mg/off-kg (lb/million off-lbs) of forged refractory metals cooled with water		
Copper	0.041	0.020
Nickel	0.018	0.012
Fluoride	1.92	0.853
Molybdenum	0.163	0.072
Oil & Grease	0.323	0.323
TSS	0.485	0.388
pH	Within the range of 7.5 to 10.0 at all times	

(h) Equipment Cleaning Wastewater - NSPS

Pollutant or pollutant property	Maximum for any one day	Maximum for monthly average
mg/off-kg (lb/million off-lbs) of refractory metals formed		
Copper	0.174	0.083
Nickel	0.075	0.051
Fluoride	8.09	3.59
Molybdenum	0.684	0.303
Oil & Grease	1.36	1.36
TSS	2.04	1.63
pH	Within the range of 7.5 to 10.0 at all times	

(i) Metal Powder Production Wastewater - NSPS

Pollutant or pollutant property	Maximum for any one day	Maximum for monthly average
mg/off-kg (lb/million off-lbs) of refractory metals powder produced		
Copper	0.360	0.172
Nickel	0.155	0.104
Fluoride	16.7	7.42
Molybdenum	1.42	0.627
Oil & Grease	2.81	2.81
TSS	4.22	3.37
pH	Within the range of 7.5 to 10.0 at all times	

(j) Metal Powder Production Floor Wash Wastewater - NSPS

There shall be no discharge of process wastewater pollutants.

(k) Metal Powder Pressing Spent Lubricants - NSPS

There shall be no discharge of process wastewater pollutants.

(l) Surface Treatment Spent Baths - NSPS

Pollutant or pollutant property	Maximum for any one day	Maximum for monthly average
mg/off-kg (lb/million off-lbs) of refractory metals surface treated		
Copper	0.498	0.237
Nickel	0.214	0.144
Fluoride	23.2	10.3
Molybdenum	1.96	0.868
Oil & Grease	3.89	3.89
TSS	5.84	4.67
pH	Within the range of 7.5 to 10.0 at all times	

(m) Surface Treatment Rinse - NSPS

Pollutant or pollutant property	Maximum for any one day	Maximum for monthly average
mg/off-kg (lb/million off-lbs) of refractory metals surface treated		
Copper	15.5	7.38
Nickel	6.66	4.48
Fluoride	720	320
Molybdenum	60.9	27.0
Oil & Grease	121	121
TSS	182	145
pH	Within the range of 7.5 to 10.0 at all times	

(n) Alkaline Cleaning Spent Baths - NSPS

Pollutant or pollutant property	Maximum for any one day	Maximum for monthly average
mg/off-kg (lb/million off-lbs) of refractory metals alkaline cleaned		
Copper	0.428	0.204
Nickel	0.184	0.124
Fluoride	19.9	8.82
Molybdenum	1.68	0.745
Oil & Grease	3.34	3.34
TSS	5.01	4.01
pH	Within the range of 7.5 to 10.0 at all times	

(o) Alkaline Cleaning Rinse - NSPS

Pollutant or pollutant property	Maximum for any one day	Maximum for monthly average
mg/off-kg (lb/million off-lbs) of refractory metals alkaline cleaned		
Copper	10.5	4.98
Nickel	4.49	3.02
Fluoride	486	216
Molybdenum	41.1	18.2
Oil & Grease	81.6	81.6
TSS	123	97.9
pH	Within the range of 7.5 to 10.0 at all times	

(p) Molten Salt Rinse - NSPS

Pollutant or pollutant property	Maximum for any one day	Maximum for monthly average
mg/off-kg (lb/million off-lbs) of refractory metals treated with molten salt		
Copper	0.810	0.386
Nickel	0.348	0.234
Fluoride	37.7	16.7
Molybdenum	3.19	1.41
Oil & Grease	6.33	6.33
TSS	9.5	7.6
pH	Within the range of 7.5 to 10.0 at all times	

(q) Tumbling or Burnishing Wastewater - NSPS

Pollutant or pollutant property	Maximum for any one day	Maximum for monthly average
mg/off-kg (lb/million off-lbs) of refractory metals tumbled or burnished		
Copper	1.60	0.763
Nickel	0.688	0.463
Fluoride	74.4	33.0
Molybdenum	6.29	2.79
Oil & Grease	12.5	12.5
TSS	18.8	15.0
pH	Within the range of 7.5 to 10.0 at all times	

(r) Sawing or Grinding Spent Neat Oils - NSPS

There shall be no discharge of process wastewater pollutants.

(s) Sawing or Grinding Spent Emulsions - NSPS

Pollutant or pollutant property	Maximum for any one day	Maximum for monthly average
mg/off-kg (lb/million off-lbs) of refractory metals sawed or ground with emulsions		
Copper	0.380	0.181
Nickel	0.164	0.110
Fluoride	17.7	7.84
Molybdenum	1.5	0.663
Oil & Grease	2.97	2.97
TSS	4.46	3.57
pH	Within the range of 7.5 to 10.0 at all times	

(t) Sawing or Grinding Contact Cooling Water - NSPS

Pollutant or pollutant property	Maximum for any one day	Maximum for monthly average
mg/off-kg (lb/million off-lbs) of refractory metals sawed or ground with contact cooling water		
Copper	3.11	1.48
Nickel	1.34	0.899
Fluoride	145.	64.2
Molybdenum	12.2	5.42
Oil & Grease	24.3	24.3
TSS	36.5	29.2
pH	Within the range of 7.5 to 10.0 at all times	

(u) Sawing or Grinding Rinse - NSPS

Pollutant or pollutant property	Maximum for any one day	Maximum for monthly average
mg/off-kg (lb/million off-lbs) of sawed or ground refractory metals rinsed		
Copper	0.018	0.009
Nickel	0.008	0.005
Fluoride	0.803	0.357
Molybdenum	0.068	0.030
Oil & Grease	0.135	0.135
TSS	0.203	0.162
pH	Within the range of 7.5 to 10.0 at all times	

(v) Wet Air Pollution Control Scrubber Blowdown - NSPS

Pollutant or pollutant property	Maximum for any one day	Maximum for monthly average
mg/off-kg (lb/million off-lbs) of refractory metals sawed, ground, surface coated or surface treated		
Copper	1.01	0.480
Nickel	0.433	0.291
Fluoride	46.8	20.8
Molybdenum	3.96	1.76
Oil & Grease	7.87	7.87
TSS	11.8	9.45
pH	Within the range of 7.5 to 10.0 at all times	

(w) Miscellaneous Wastewater Sources - NSPS

Pollutant or pollutant property	Maximum for any one day	Maximum for monthly average
mg/off-kg (lb/million off-lbs) of refractory metals formed		
Copper	0.442	0.211
Nickel	0.190	0.128
Fluoride	20.6	9.11
Molybdenum	1.74	0.770
Oil & Grease	3.45	3.45
TSS	5.18	4.14
pH	Within the range of 7.5 to 10.0 at all times	

(x) Dye Penetrant Testing Wastewater - NSPS

Pollutant or pollutant property	Maximum for any one day	Maximum for monthly average
mg/off-kg (lb/million off-lbs) of refractory metals product tested		
Copper	0.100	0.048
Nickel	0.043	0.029
Fluoride	4.62	2.05
Molybdenum	0.391	0.173
Oil & Grease	0.776	0.776
TSS	1.17	0.931
pH	Within the range of 7.5 to 10.0 at all times	

(y) Degreasing Spent Solvents - NSPS

There shall be no discharge of process wastewater pollutants.

SUBPART F: NEW SOURCE PERFORMANCE STANDARDS FOR THE TITANIUM FORMING SUBCATEGORY

(a) Rolling Spent Neat Oils - NSPS

There shall be no discharge of process wastewater pollutants.

(b) Rolling Contact Cooling Water - NSPS

Pollutant or pollutant property	Maximum for any one day	Maximum for monthly average
mg/off-kg (lb/million off-lbs) of titanium rolled with contact cooling water		
Cyanide	0.142	0.059
Lead	0.205	0.098
Zinc	0.713	0.298
Ammonia	65.1	28.6
Fluoride	29.1	12.9
Oil & Grease	9.76	5.86
TSS	20.0	9.52
pH	Within the range of 7.5 to 10.0 at all times	

(c) Drawing Spent Neat Oils - NSPS

There shall be no discharge of process wastewater pollutants.

(d) Extrusion Spent Neat Oils - NSPS

There shall be no discharge of process wastewater pollutants.

(e) Extrusion Spent Emulsions - NSPS

Pollutant or pollutant property	Maximum for any one day	Maximum for monthly average
mg/off-kg (lb/million off-lbs) of titanium extruded		
Cyanide	0.021	0.009
Lead	0.030	0.015
Zinc	0.105	0.044
Ammonia	9.59	4.22
Fluoride	4.28	1.9
Oil & Grease	1.44	0.863
TSS	2.95	1.40
pH	Within the range of 7.5 to 10.0 at all times	

(f) Extrusion Press Hydraulic Fluid Leakage - NSPS

Pollutant or pollutant property	Maximum for any one day	Maximum for monthly average
mg/off-kg (lb/million off-lbs) of titanium extruded		
Cyanide	0.052	0.022
Lead	0.075	0.036
Zinc	0.260	0.109
Ammonia	23.7	10.5
Fluoride	10.6	4.70
Oil & Grease	3.56	2.14
TSS	7.30	3.47
pH	Within the range of 7.5 to 10.0 at all times	

(g) Forging Spent Lubricants - NSPS

There shall be no discharge of process wastewater pollutants.

(h) Forging Contact Cooling Water - NSPS

Pollutant or pollutant property	Maximum for any one day	Maximum for monthly average
mg/off-kg (lb/million off-lbs) of forged titanium cooled with water		
Cyanide	0.029	0.012
Lead	0.0420	0.020
Zinc	0.146	0.061
Ammonia	13.3	5.86
Fluoride	5.95	2.64
Oil & Grease	2.00	1.20
TSS	4.10	1.95
pH	Within the range of 7.5 to 10.0 at all times	

(i) Forging Equipment Cleaning Wastewater - NSPS

Pollutant or pollutant property	Maximum for any one day	Maximum for monthly average
mg/off-kg (lb/million off-lbs) of titanium forged		
Cyanide	0.012	0.005
Lead	0.017	0.008
Zinc	0.059	0.025
Ammonia	5.33	2.35
Fluoride	2.38	1.06
Oil & Grease	0.800	0.480
TSS	1.64	0.780
pH	Within the range of 7.5 to 10.0 at all times	

(j) Forging Press Hydraulic Fluid Leakage - NSPS

Pollutant or pollutant property	Maximum for any one day	Maximum for monthly average
mg/off-kg (lb/million off-lbs) of titanium forged		
Cyanide	0.293	0.121
Lead	0.424	0.202
Zinc	1.48	0.616
Ammonia	135	59.2
Fluoride	60.1	26.7
Oil & Grease	20.2	12.1
TSS	41.4	19.7
pH	Within the range of 7.5 to 10.0 at all times	

(k) Tube Reducing Spent Lubricants - NSPS

There shall be no discharge of process wastewater pollutants.

(l) Heat Treatment Contact Cooling Water - NSPS

There shall be no discharge allowance for the discharge of process wastewater pollutants.

(m) Surface Treatment Spent Baths - NSPS

Pollutant or pollutant property	Maximum for any one day	Maximum for monthly average
mg/off-kg (lb/million off-lbs) of titanium surface treated		
Cyanide	0.061	0.025
Lead	0.088	0.042
Zinc	0.304	0.127
Ammonia	27.7	12.2
Fluoride	12.4	5.49
Oil & Grease	4.16	2.50
TSS	8.53	4.06
pH	Within the range of 7.5 to 10.0 at all times	

(n) Surface Treatment Rinse - NSPS

Pollutant or pollutant property	Maximum for any one day	Maximum for monthly average
mg/off-kg (lb/million off-lbs) of titanium surface treated		
Cyanide	0.847	0.351
Lead	1.23	0.584
Zinc	4.27	1.78
Ammonia	389	171
Fluoride	174	77.1
Oil & Grease	58.4	35.1
TSS	120	57.0
pH	Within the range of 7.5 to 10.0 at all times	

(o) Wet Air Pollution Control Scrubber Blowdown - NSPS

Pollutant or pollutant property	Maximum for any one day	Maximum for monthly average
mg/off-kg (lb/million off-lbs) of titanium surface treated or forged		
Cyanide	0.062	0.026
Lead	0.090	0.043
Zinc	0.313	0.131
Ammonia	28.5	12.6
Fluoride	12.8	5.65
Oil & Grease	4.28	2.57
TSS	8.78	4.18
pH	Within the range of 7.5 to 10.0 at all times	

(p) Alkaline Cleaning Spent Baths - NSPS

Pollutant or pollutant property	Maximum for any one day	Maximum for monthly average
mg/off-kg (lb/million off-lbs) of titanium alkaline cleaned		
Cyanide	0.070	0.030
Lead	0.101	0.048
Zinc	0.351	0.147
Ammonia	32.0	14.1
Fluoride	14.3	6.34
Oil & Grease	4.80	2.88
TSS	9.84	4.68
pH	Within the range of 7.5 to 10.0 at all times	

(q) Alkaline Cleaning Rinse - NSPS

Pollutant or pollutant property	Maximum for any one day	Maximum for monthly average
mg/off-kg (lb/million of-lbs) of titanium alkaline cleaned		
Cyanide	0.080	0.033
Lead	0.116	0.055
Zinc	0.403	0.169
Ammonia	36.8	16.2
Fluoride	16.4	7.29
Oil & Grease	5.52	3.31
TSS	11.3	5.38
pH	Within the range of 7.5 to 10.0 at all times	

(r) Molten Salt Rinse - NSPS

Pollutant or pollutant property	Maximum for any one day	Maximum for monthly average
mg/off-kg (lb/million of-lbs) of titanium treated with molten salt		
Cyanide	0.277	0.115
Lead	0.401	0.191
Zinc	1.40	0.583
Ammonia	128	56.0
Fluoride	56.8	25.2
Oil & Grease	19.1	11.5
TSS	39.2	18.6
pH	Within the range of 7.5 to 10.0 at all times	

(s) Tumbling Wastewater - NSPS

Pollutant or pollutant property	Maximum for any one day	Maximum for monthly average
mg/off-kg (lb/million off-lbs) of titanium tumbled		
Cyanide	0.023	0.010
Lead	0.033	0.016
Zinc	0.116	0.048
Ammonia	10.6	4.63
Fluoride	4.70	2.09
Oil & Grease	1.58	0.948
TSS	3.24	1.54
pH	Within the range of 7.5 to 10.0 at all times	

(t) Sawing or Grinding Spent Neat Oils - NSPS

There shall be no discharge of process wastewater pollutants.

(u) Sawing or Grinding Spent Emulsions - NSPS

Pollutant or pollutant property	Maximum for any one day	Maximum for monthly average
mg/off-kg (lb/million off-lbs) of titanium sawed or ground with emulsions		
Cyanide	0.053	0.022
Lead	0.077	0.037
Zinc	0.267	0.112
Ammonia	24.4	10.7
Fluoride	10.9	4.83
Oil & Grease	3.66	2.20
TSS	7.51	3.57
pH	Within the range of 7.5 to 10.0 at all times	

(v) Sawing or Grinding Contact Cooling Water - NSPS

Pollutant or pollutant property	Maximum for any one day	Maximum for monthly average
mg/off-kg (lb/million of-lbs) of titanium sawed or ground with contact cooling water		
Cyanide	0.138	0.057
Lead	0.200	0.095
Zinc	0.695	0.291
Ammonia	63.5	27.9
Fluoride	28.3	12.6
Oil & Grease	9.52	5.71
TSS	19.5	9.28
pH	Within the range of 7.5 to 10.0 at all times	

(w) Dye Penetrant Testing Wastewater - NSPS

Pollutant or pollutant property	Maximum for any one day	Maximum for monthly average
mg/off-kg (lb/million of-lbs) of titanium tested using dye pentrant methods		
Cyanide	0.325	0.135
Lead	0.471	0.224
Zinc	1.64	0.683
Ammonia	149	65.7
Fluoride	66.7	29.6
Oil & Grease	22.4	13.5
TSS	45.9	21.9
pH	Within the range of 7.5 to 10.0 at all times	

(x) Hydrotesting Wastewater - NSPS

There shall be no discharge of process wastewater pollutants.

(y) Miscellaneous Wastewater Sources - NSPS

Pollutant or pollutant property	Maximum for any one day	Maximum for monthly average
mg/off-kg (lb/million off-lbs) of titanium formed		
Cyanide	0.010	0.004
Lead	0.014	0.007
Zinc	0.048	0.020
Ammonia	4.32	1.90
Fluoride	1.93	0.856
Oil & Grease	0.648	0.389
TSS	1.33	0.632
pH	Within the range of 7.5 to 10.0 at all times	

(z) Degreasing Spent Solvents - NSPS

There shall be no discharge of process wastewater pollutants.

SUBPART G: NEW SOURCE PERFORMANCE STANDARDS FOR THE URANIUM FORMING SUBCATEGORY

(a) Extrusion Spent Lubricants - NSPS

There shall be no discharge of process wastewater pollutants.

(b) Extrusion Tool Contact Cooling Water - NSPS

Pollutant or pollutant property	Maximum for any one day	Maximum for monthly average
mg/off-kg (lb/million off-lbs) of uranium extruded		
Cadmium	0.007	0.003
Chromium	0.013	0.005
Copper	0.044	0.021
Lead	0.010	0.005
Nickel	0.019	0.013
Fluoride	2.05	0.908
Molybdenum	0.173	0.077
Oil & Grease	0.344	0.344
TSS	0.516	0.413
pH	Within the range of 7.5 to 10.0 at all times	

(c) Heat Treatment Contact Cooling Water - NSPS

Pollutant or pollutant property	Maximum for any one day	Maximum for monthly average
mg/off-kg (lb/million off-lbs) of extruded or forged uranium heat treated		
Cadmium	0.006	0.003
Chromium	0.012	0.005
Copper	0.040	0.019
Lead	0.009	0.004
Nickel	0.017	0.012
Fluoride	1.86	0.827
Molybdenum	0.158	0.070
Oil & Grease	0.313	0.313
TSS	0.470	0.376
pH	Within the range of 7.5 to 10.0 at all times	

(d) Forging Spent Lubricants - NSPS

There shall be no discharge of process wastewater pollutants.

(e) Surface Treatment Spent Baths - NSPS

Pollutant or pollutant property	Maximum for any one day	Maximum for monthly average
mg/off-kg (lb/million off-lbs) of uranium surface treated		
Cadmium	0.006	0.002
Chromium	0.010	0.004
Copper	0.035	0.017
Lead	0.008	0.004
Nickel	0.015	0.010
Fluoride	1.62	0.718
Molybdenum	0.137	0.061
Oil & Grease	0.272	0.272
TSS	0.408	0.327
pH	Within the range of 7.5 to 10.0 at all times	

(f) Surface Treatment Rinse - NSPS

Pollutant or pollutant property	Maximum for any one day	Maximum for monthly average
mg/off-kg (lb/million off-lbs) of uranium surface treated		
Cadmium	0.068	0.027
Chromium	0.125	0.051
Copper	0.432	0.206
Lead	0.095	0.044
Nickel	0.186	0.125
Fluoride	20.1	8.90
Molybdenum	1.70	0.752
Oil & Grease	3.37	3.37
TSS	5.06	4.05
pH	Within the range of 7.5 to 10.0 at all times	

(g) Wet Air Pollution Control Scrubber Blowdown - NSPS

Pollutant or pollutant property	Maximum for any one day	Maximum for monthly average
mg/off-kg (lb/million off-lbs) of uranium surface treated		
Cadmium	0.0007	0.0003
Chromium	0.001	0.0005
Copper	0.005	0.002
Lead	0.001	0.0005
Nickel	0.002	0.001
Fluoride	0.208	0.092
Molybdenum	0.018	0.008
Oil & Grease	0.035	0.035
TSS	0.053	0.042
pH	Within the range of 7.5 to 10.0 at all times	

(h) Sawing or Grinding Spent Emulsions - NSPS

Pollutant or pollutant property	Maximum for any one day	Maximum for monthly average
mg/off-kg (lb/million off-lbs) of uranium sawed or ground with emulsions		
Cadmium	0.001	0.0005
Chromium	0.002	0.0009
Copper	0.007	0.004
Lead	0.002	0.0008
Nickel	0.003	0.002
Fluoride	0.338	0.150
Molybdenum	0.029	0.013
Oil & Grease	0.057	0.057
TSS	0.085	0.068
pH	Within the range of 7.5 to 10.0 at all times	

(i) Sawing or Grinding Contact Cooling Water - NSPS

Pollutant or pollutant property	Maximum for any one day	Maximum for monthly average
mg/off-kg (lb/million off-lbs) of uranium sawed or ground with contact cooling water		
Cadmium	0.033	0.013
Chromium	0.061	0.025
Copper	0.211	0.101
Lead	0.046	0.022
Nickel	0.091	0.061
Fluoride	9.82	4.36
Molybdenum	0.830	0.368
Oil & Grease	1.65	1.65
TSS	2.48	1.98
pH	Within the range of 7.5 to 10.0 at all times	

(j) Sawing or Grinding Rinse - NSPS

Pollutant or pollutant property	Maximum for any one day	Maximum for monthly average
mg/off-kg (lb/million off-lbs) of sawed or ground uranium rinsed		
Cadmium	0.001	0.0004
Chromium	0.002	0.0007
Copper	0.006	0.003
Lead	0.002	0.0006
Nickel	0.003	0.002
Fluoride	0.277	0.123
Molybdenum	0.024	0.011
Oil & Grease	0.047	0.047
TSS	0.070	0.056
pH	Within the range of 7.5 to 10.0 at all times	

(k) Area Cleaning Rinse - NSPS

Pollutant or pollutant property	Maximum for any one day	Maximum for monthly average
mg/off-kg (lb/million off-lbs) of uranium formed		
Cadmium	0.009	0.004
Chromium	0.016	0.007
Copper	0.055	0.026
Lead	0.012	0.006
Nickel	0.024	0.016
Fluoride	2.56	1.14
Molybdenum	0.216	0.096
Oil & Grease	0.429	0.429
TSS	0.644	0.515
pH	Within the range of 7.5 to 10.0 at all times	

(l) Drum Washwater - NSPS

Pollutant or pollutant property	Maximum for any one day	Maximum for monthly average
mg/off-kg (lb/million off-lbs) of uranium formed		
Cadmium	0.009	0.004
Chromium	0.017	0.007
Copper	0.057	0.027
Lead	0.013	0.006
Nickel	0.025	0.017
Fluoride	2.64	1.17
Molybdenum	0.223	0.099
Oil & Grease	0.443	0.443
TSS	0.665	0.532
pH	Within the range of 7.5 to 10.0 at all times	

(m) Laundry Washwater - NSPS

Pollutant or pollutant property	Maximum for any one day	Maximum for monthly average
mg/employee - day		
Cadmium	5.24	2.10
Chromium	9.70	3.93
Copper	33.6	16.0
Lead	7.34	3.41
Nickel	14.4	9.70
Fluoride	1,560	692
Molybdenum	132	58.4
Oil & Grease	262	262
TSS	393	315
pH	Within the range of 7.5 to 10.0 at all times	

(n) Degreasing Spent Solvents - NSPS

There shall be no discharge of process waster pollutants.

SUBPART H: NEW SOURCE PERFORMANCE STANDARDS FOR THE ZINC FORMING SUBCATEGORY

(a) Rolling Spent Neat Oils - NSPS

There shall be no discharge of process wastewater pollutants.

(b) Rolling Spent Emulsions - NSPS

Pollutant or pollutant property	Maximum for any one day	Maximum for monthly average
mg/off-kg (lb/million off-lbs) of zinc rolled with emulsions		
Chromium	0.0005	0.0002
Copper	0.002	0.0009
Cyanide	0.0003	0.0001
Zinc	0.002	0.0006
Oil & Grease	0.014	0.014
TSS	0.021	0.017
pH	Within the range of 7.5 to 10.0 at all times.	

(c) Rolling Contact Cooling Water - NSPS

Pollutant or pollutant property	Maximum for any one day	Maximum for monthly average
mg/off-kg (lb/million off-lbs) of zinc rolled with contact cooling water		
Chromium	0.020	0.009
Copper	0.069	0.033
Cyanide	0.011	0.004
Zinc	0.055	0.023
Oil & Grease	0.536	0.536
TSS	0.804	0.643
pH	Within the range of 7.5 to 10.0 at all times.	

(d) Drawing Spent Emulsions - NSPS

Pollutant or pollutant property	Maximum for any one day	Maximum for monthly average
mg/off-kg (lb/million off-lbs) of zinc drawn with emulsions		
Chromium	0.002	0.0009
Copper	0.008	0.004
Cyanide	0.001	0.0005
Zinc	0.006	0.003
Oil & Grease	0.058	0.058
TSS	0.087	0.070
pH	Within the range of 7.5 to 10.0 at all times.	

(e) Direct Chill Casting Contact Cooling Water - NSPS

Pollutant or pollutant property	Maximum for any one day	Maximum for monthly average
mg/off-kg (lb/million off-lbs) of zinc cast by the direct chill method		
Chromium	0.019	0.008
Copper	0.065	0.031
Cyanide	0.010	0.004
Zinc	0.052	0.021
Oil & Grease	0.505	0.505
TSS	0.758	0.606
pH	Within the range of 7.5 to 10.0 at all times.	

(f) Stationary Casting Contact Cooling Water - NSPS

There shall be no discharge of process wastewater pollutants.

(g) Heat Treatment Contact Cooling Water - NSPS

Pollutant or pollutant property	Maximum for any one day	Maximum for monthly average
mg/off-kg (lb/million off-lbs) of zinc heat treated		
Chromium	0.029	0.012
Copper	0.098	0.047
Cyanide	0.016	0.006
Zinc	0.078	0.032
Oil & Grease	0.763	0.763
TSS	1.15	0.916
pH	Within the range of 7.5 to 10.0 at all times.	

(h) Surface Treatment Spent Baths - NSPS

Pollutant or pollutant property	Maximum for any one day	Maximum for monthly average
mg/off-kg (lb/million off-lbs) of zinc surface treated		
Chromium	0.033	0.014
Copper	0.114	0.054
Cyanide	0.018	0.007
Zinc	0.091	0.038
Oil & Grease	0.887	0.887
TSS	1.33	1.07
pH	Within the range of 7.5 to 10.0 at all times.	

(i) Surface Treatment Rinse - NSPS

Pollutant or pollutant property	Maximum for any one day	Maximum for monthly average
mg/off-kg (lb/million off-lbs) of zinc surface treated		
Chromium	0.133	0.054
Copper	0.459	0.219
Cyanide	0.072	0.029
Zinc	0.365	0.151
Oil & Grease	3.58	3.58
TSS	5.37	4.30
pH	Within the range of 7.5 to 10.0 at all times.	

(j) Alkaline Cleaning Spent Baths - NSPS

Pollutant or pollutant property	Maximum for any one day	Maximum for monthly average
mg/off-kg (lb/million off-lbs) of zinc alkaline cleaned		
Chromium	0.002	0.0006
Copper	0.005	0.002
Cyanide	0.0007	0.0003
Zinc	0.004	0.002
Oil & Grease	0.036	0.036
TSS	0.054	0.043
pH	Within the range of 7.5 to 10.0 at all times.	

(k) Alkaline Cleaning Rinse - NSPS

Pollutant or pollutant property	Maximum for any one day	Maximum for monthly average
mg/off-kg (lb/million off-lbs) of zinc alkaline cleaned		
Chromium	0.626	0.254
Copper	2.17	1.03
Cyanide	0.338	0.135
Zinc	1.73	0.710
Oil & Grease	16.9	16.9
TSS	25.4	20.3
pH	Within the range of 7.5 to 10.0 at all times.	

(l) Sawing or Grinding Spent Emulsions - NSPS

Pollutant or pollutant property	Maximum for any one day	Maximum for monthly average
mg/off-kg (lb/million off-lbs) of zinc sawed or ground with emulsions		
Chromium	0.009	0.004
Copper	0.031	0.015
Cyanide	0.005	0.002
Zinc	0.025	0.010
Oil & Grease	0.238	0.238
TSS	0.357	0.286
pH	Within the range of 7.5 to 10.0 at all times.	

(m) Electrocoating Rinse - NSPS

Pollutant or pollutant property	Maximum for any one day	Maximum for monthly average
mg/off-kg (lb/million off-lbs) of zinc electrocoated		
Chromium	0.085	0.035
Copper	0.293	0.140
Cyanide	0.046	0.019
Zinc	0.234	0.096
Oil & Grease	2.29	2.29
TSS	3.44	2.75
pH	Within the range of 7.5 to 10.0 at all times.	

(n) Degreasing Spent Solvents - NSPS

There shall be no discharge of process wastewater pollutants.

SUBPART I: NEW SOURCE PERFORMANCE STANDARDS FOR THE ZIRCONIUM-HAFNIUM FORMING SUBCATEGORY

(a) Rolling Spent Neat Oils - NSPS

There shall be no discharge of process wastewater pollutants.

(b) Drawing Spent Lubricants - NSPS

There shall be no discharge of process wastewater pollutants.

(c) Extrusion Spent Emulsions - NSPS

There shall be no discharge of process wastewater pollutants.

(d) Extrusion Press Hydraulic Fluid Leakage - NSPS

Pollutant or pollutant property	Maximum for any one day	Maximum for monthly average
mg/off-kg (lb/million off-lbs) of zirconium-hafnium extruded		
Chromium	0.104	0.043
Cyanide	0.069	0.029
Nickel	0.455	0.301
Ammonia	31.6	13.9
Fluoride	14.1	6.26
Oil & Grease	4.74	2.85
TSS	9.72	4.62
pH	Within the range of 7.5 to 10.0 at all times.	

(e) Swaging Spent Neat Oils - NSPS

There shall be no discharge of process wastewater pollutants.

(f) Heat Treatment Contact Cooling Water - NSPS

Pollutant or pollutant property	Maximum for any one day	Maximum for monthly average
mg/off-kg (lb/million off-lbs) of zirconium-hafnium heat treated		
Chromium	0.015	0.006
Cyanide	0.010	0.004
Nickel	0.066	0.044
Ammonia	4.57	2.01
Fluoride	2.04	0.906
Oil & Grease	0.686	0.412
TSS	1.41	0.669
pH	Within the range of 7.5 to 10.0 at all times.	

(g) Tube Reducing Spent Lubricants - NSPS

There shall be no discharge of process wastewater pollutants.

(h) Surface Treatment Spent Baths - NSPS

Pollutant or pollutant property	Maximum for any one day	Maximum for monthly average
mg/off-kg (lb/million off-lbs) of zirconium-hafnium surface treated		
Chromium	0.150	0.061
Cyanide	0.099	0.041
Nickel	0.653	0.432
Ammonia	45.3	20.0
Fluoride	20.3	8.98
Oil & Grease	6.80	4.08
TSS	14.0	6.63
pH	Within the range of 7.5 to 10.0 at all times.	

(i) Surface Treatment Rinse - NSPS

Pollutant or pollutant property	Maximum for any one day	Maximum for monthly average
mg/off-kg (lb/million off-lbs) of zirconium-hafnium surface treated		
Chromium	0.391	0.160
Cyanide	0.258	0.107
Nickel	1.71	1.13
Ammonia	119	52.1
Fluoride	52.9	23.5
Oil & Grease	17.8	10.7
TSS	36.4	17.3
pH	Within the range of 7.5 to 10.0 at all times.	

(j) Alkaline Cleaning Spent Baths - NSPS

Pollutant or pollutant property	Maximum for any one day	Maximum for monthly average
mg/off-kg (lb/million off-lbs) of zirconium-hafnium alkaline cleaned		
Chromium	0.704	0.288
Cyanide	0.464	0.192
Nickel	3.07	2.03
Ammonia	214	93.8
Fluoride	95.2	42.3
Oil & Grease	32.0	19.2
TSS	65.6	31.2
pH	Within the range of 7.5 to 10.0 at all times.	

(k) Alkaline Cleaning Rinse - NSPS

Pollutant or pollutant property	Maximum for any one day	Maximum for monthly average
mg/off-kg (lb/million off-lbs) of zirconium-hafnium alkaline cleaned		
Chromium	1.38	0.565
Cyanide	0.911	0.377
Nickel	6.03	3.99
Ammonia	419	184
Fluoride	187	82.9
Oil & Grease	62.8	37.7
TSS	129	61.3
pH	Within the range of 7.5 to 10.0 at all times.	

(l) Sawing or Grinding Spent Emulsions - NSPS

Pollutant or pollutant property	Maximum for any one day	Maximum for monthly average
mg/off-kg (lb/million off-lbs) of zirconium-hafnium sawed or ground with emulsions		
Chromium	0.124	0.051
Cyanide	0.082	0.034
Nickel	0.540	0.357
Ammonia	37.5	16.50
Fluoride	16.7	7.42
Oil & Grease	5.62	3.37
TSS	11.5	5.48
pH	Within the range of 7.5 to 10.0 at all times.	

(m) Wet Air Pollution Control Scrubber Blowdown - NSPS

There shall be no allowance for the discharge of process wastewater pollutants.

(n) Degreasing Spent Solvents - NSPS

There shall be no discharge of process wastewater pollutants.

(o) Degreasing Rinse - NSPS

There shall be no discharge of process wastewater pollutants

(p) Molten Salt Rinse - NSPS

Pollutant or pollutant property	Maximum for any one day	Maximum for monthly average
mg/off-kg (lb/million off-lbs) of zirconium-hafnium rinsed following molten salt treatment		
Chromium	0.333	0.136
Cyanide	0.220	0.091
Nickel	1.45	0.960
Ammonia	101	44.3
Fluoride	45.0	20.0
Oil & Grease	15.1	9.07
TSS	31.0	14.8
pH	Within the range of 7.5 to 10.0 at all times.	

(q) Sawing or Grinding Contact Cooling Water - NSPS

Pollutant or pollutant property	Maximum for any one day	Maximum for monthly average
mg/off-kg (lb/million off-lbs) of zirconium-hafnium sawed or ground with contact cooling water		
Chromium	0.142	0.058
Cyanide	0.093	0.039
Nickel	0.617	0.408
Ammonia	42.8	18.8
Fluoride	19.1	8.48
Oil & Grease	6.42	3.85
TSS	13.2	6.26
pH	Within the range of 7.5 to 10.0 at all times.	

(r) Sawing or Grinding Rinse - NSPS

Pollutant or pollutant property	Maximum for any one day	Maximum for monthly average
mg/off-kg (lb/million off-lbs) of sawed or ground zirconium-hafnium rinsed		
Chromium	0.079	0.033
Cyanide	0.052	0.022
Nickel	0.346	0.229
Ammonia	24.0	10.6
Fluoride	10.7	4.75
Oil & Grease	3.60	2.16
TSS	7.38	3.51
pH	Within the range of 7.5 to 10.0 at all times.	

(s) Sawing or Grinding Spent Neat Oils - NSPS

There shall be no discharge of process wastewater pollutants.

(t) Inspection and Testing Wastewater - NSPS

Pollutant or pollutant property	Maximum for any one day	Maximum for monthly average
mg/off-kg (lb/million off-lbs) of zirconium-hafnium tested		
Chromium	0.007	0.003
Cyanide	0.005	0.002
Nickel	0.030	0.020
Ammonia	2.06	0.903
Fluoride	0.917	0.407
Oil & Grease	0.308	0.185
TSS	0.632	0.301
pH	Within the range of 7.5 to 10.0 at all times.	

SUBPART J: NEW SOURCE PERFORMANCE STANDARDS FOR THE METAL POWDERS SUBCATEGORY

(a) Metal Powder Production Atomization Wastewater - NSPS

Pollutant or pollutant property	Maximum for any one day	Maximum for monthly average
mg/off-kg (lb/million off-lbs) of powder wet atomized		
Copper	9.58	5.04
Cyanide	1.46	0.605
Lead	2.12	1.01
Oil & Grease	101	60.5
TSS	207	98.3
pH	Within the range of 7.5 to 10.0 at all times.	

(b) Sizing Spent Neat Oils - NSPS

There shall be no discharge of process wastewater pollutants.

(c) Sizing Spent Emulsions - NSPS

Pollutant or pollutant property	Maximum for any one day	Maximum for monthly average
mg/off-kg (lb/million off-lbs) of powder sized		
Copper	0.028	0.015
Cyanide	0.004	0.002
Lead	0.006	0.003
Oil & Grease	0.292	0.175
TSS	0.599	0.285
pH	Within the range of 7.5 to 10.0 at all times.	

(d) Oil-Resin Impregnation Wastewater - NSPS

There shall be no discharge of process wastewater pollutants.

(e) Steam Treatment Wet Air Pollution Control Scrubber Blowdown - NSPS

Pollutant or pollutant property	Maximum for any one day	Maximum for monthly average
mg/off-kg (lb/million off-lbs) of powder metallurgy parts steam treated		
Copper	0.151	0.079
Cyanide	0.023	0.010
Lead	0.033	0.016
Oil & Grease	1.59	0.951
TSS	3.25	1.55
pH	Within the range of 7.5 to 10.0 at all times.	

(f) Tumbling, Burnishing and Cleaning Wastewater - NSPS

Pollutant or pollutant property	Maximum for any one day	Maximum for monthly average
mg/off-kg (lb/million off-lbs) of powder metallurgy parts tumbled, burnished, or cleaned		
Copper	0.836	0.440
Cyanide	0.128	0.053
Lead	0.185	0.088
Oil & Grease	8.80	5.28
TSS	18.1	8.58
pH	Within the range of 7.5 to 10.0 at all times.	

(g) Sawing or Grinding Spent Neat Oils - NSPS

There shall be no discharge of process wastewater pollutants.

(h) Sawing or Grinding Spent Emulsions - NSPS

Pollutant or pollutant property	Maximum for any one day	Maximum for monthly average
mg/off-kg (lb/million off-lbs) of powder metallurgy parts sawed or ground with emulsions		
Copper	0.035	0.018
Cyanide	0.005	0.002
Lead	0.008	0.004
Oil & Grease	0.362	0.217
TSS	0.742	0.353
pH	Within the range of 7.5 to 10.0 at all times.	

(i) Sawing or Grinding Contact Cooling Water - NSPS

Pollutant or pollutant property	Maximum for any one day	Maximum for monthly average
mg/off-kg (lb/million off-lbs) of powder sawed or ground with contact cooling water		
Copper	3.08	1.62
Cyanide	0.470	0.195
Lead	0.681	0.324
Oil & Grease	32.4	19.5
TSS	66.4	31.6
pH	Within the range of 7.5 to 10.0 at all times.	

(j) Hot Pressing Contact Cooling Water - NSPS

Pollutant or pollutant property	Maximum for any one day	Maximum for monthly average
mg/off-kg (lb/million off-lbs) of powder cooled after pressing		
Copper	1.67	0.880
Cyanide	0.255	0.106
Lead	0.370	0.176
Oil & Grease	17.6	10.6
TSS	36.1	17.2
pH	Within the range of 7.5 to 10.0 at all times.	

k) Mixing Wet Air Pollution Control Scrubber Blowdown - NSPS

Pollutant or pollutant property	Maximum for any one day	Maximum for monthly average
mg/off-kg (lb/million off-lbs) of powder mixed		
Copper	15.0	7.90
Cyanide	2.29	0.948
Lead	3.32	1.58
Oil & Grease	158	94.8
TSS	324	154
pH	Within the range of 7.5 to 10.0 at all times.	

(1) Degreasing Spent Solvents - NSPS

There shall be no discharge of process wastewater pollutants.

5. PSES is being promulgated based on the model treatment technology of flow equalization, oil skimming, chemical precipitation, sedimentation, and filtration (lime, settle, and filter) technology, and in-process flow reduction control methods, and where appropriate, ammonia steam stripping, chemical emulsion breaking, chromium reduction, and cyanide precipitation for the nickel-cobalt forming subcategory. PSES is being promulgated based on the model treatment technology of flow equalization, oil skimming, chemical precipitation and sedimentation (lime and settle) technology, and in-process flow reduction control methods, and where appropriate, ammonia steam stripping, chemical emulsion breaking, chromium reduction, and cyanide precipitation for the lead-tin-bismuth, magnesium, precious metals, refractory metals, titanium, and zirconium-hafnium forming subcategories. Iron coprecipitation is included in this model treatment technology for removal of the pollutant molybdenum from wastewaters in the refractory metals forming subcategory. PSES is being promulgated based on the model treatment technology of flow equalization, oil skimming, and chemical precipitation and sedimentation (lime and settle) technology, and where appropriate, ammonia steam stripping, chemical emulsion breaking, chromium reduction, and cyanide precipitation for the metal powders subcategory. The Agency is not regulating the uranium and zinc forming subcategories under PSES. The following pretreatment standards are being promulgated for existing sources:

6. PSNS is being promulgated based on the model treatment technology of flow equalization, oil skimming, chemical precipitation, sedimentation, and filtration (lime, settle, and filter) technology, and in-process flow reduction control methods, and where appropriate, ammonia steam stripping, chemical emulsion breaking, chromium reduction, and cyanide precipitation for the magnesium, nickel-cobalt, refractory metals, uranium, and zinc forming subcategories. Iron coprecipitation is included in this model treatment technology for removal of the pollutant molybdenum from wastewaters in the refractory metals and uranium forming subcategories. PSNS is being promulgated based on the model treatment technology of flow equalization, oil skimming, chemical precipitation and sedimentation (lime and settle) technology, and in-process flow reduction control methods, and where appropriate, ammonia steam stripping, chemical emulsion breaking, chromium reduction, and cyanide precipitation for the lead-tin-bismuth, precious metals, titanium and zirconium-hafnium forming subcategories and the metals powders subcategory. The following pretreatment standards are being promulgated for new sources:

SUBPART A: PRETREATMENT STANDARDS FOR EXISTING SOURCES AND PRETREATMENT STANDARDS FOR NEW SOURCES FOR THE LEAD-TIN-BISMUTH FORMING SUBCATEGORY

(a) Rolling Spent Emulsions - PSES

Pollutant or pollutant property	Maximum for any one day	Maximum for monthly average
mg/off-kg (lb/million off-lbs) of lead-tin-bismuth rolled with emulsions		
Antimony	0.067	0.030
Lead	0.010	0.005

(b) Rolling Spent Soap Solutions - PSES

Pollutant or pollutant property	Maximum for any one day	Maximum for monthly average
mg/off-kg (lb/million off-lbs) of lead-tin-bismuth rolled with soap solutions		
Antimony	0.124	0.055
Lead	0.018	0.009

(c) Drawing Spent Neat Oils - PSES

There shall be no discharge of process wastewater pollutants.

(d) Drawing Spent Emulsions - PSES

Pollutant or pollutant property	Maximum for any one day	Maximum for monthly average
mg/off-kg (lb/million off-lbs) of lead-tin-bismuth drawn with emulsions		
Antimony	0.076	0.034
Lead	0.011	0.005

(e) Drawing Spent Soap Solutions - PSES

Pollutant or pollutant property	Maximum for any one day	Maximum for monthly average
mg/off-kg (lb/million off-lbs) of lead-tin-bismuth drawn with soap solutions		
Antimony	0.022	0.010
Lead	0.003	0.002

(f) Extrusion Press and Solution Heat Treatment Contact Cooling Water - PSES

Pollutant or pollutant property	Maximum for any one day	Maximum for monthly average
mg/off-kg (lb/million off-lbs) of lead-tin-bismuth heat treated		
Antimony	0.414	0.185
Lead	0.061	0.029

(g) Extrusion Press Hydraulic Fluid Leakage - PSES

Pollutant or pollutant property	Maximum for any one day	Maximum for monthly average
mg/off-kg (lb/million off-lbs) of lead-tin-bismuth extruded		
Antimony	0.158	0.071
Lead	0.023	0.011

(h) Continuous Strip Casting Contact Cooling Water - PSES

Pollutant or pollutant property	Maximum for any one day	Maximum for monthly average
mg/off-kg (lb/million off-lbs) of lead-tin-bismuth cast by the continuous strip method		
Antimony	0.003	0.001
Lead	0.0004	0.0002

(i) Semi-Continuous Ingot Casting Contact Cooling Water - PSES

Pollutant or pollutant property	Maximum for any one day	Maximum for monthly average
mg/off-kg (lb/million off-lbs) of lead-tin-bismuth cast by the semi-continuous method		
Antimony	0.009	0.004
Lead	0.001	0.0006

(j) Shot Casting Contact Cooling Water - PSES

Pollutant or pollutant property	Maximum for any one day	Maximum for monthly average
mg/off-kg (lb/million off-lbs) of lead-tin-bismuth shot cast		
Antimony	0.107	0.048
Lead	0.016	0.008

(k) Shot-Forming Wet Air Pollution Control Scrubber Blowdown - PSES

Pollutant or pollutant property	Maximum for any one day	Maximum for monthly average
mg/off-kg (lb/million off-lbs) of lead-tin-bismuth shot formed		
Antimony	0.169	0.076
Lead	0.025	0.012

(l) Alkaline Cleaning Spent Baths - PSES

Pollutant or pollutant property	Maximum for any one day	Maximum for monthly average
mg/off-kg (lb/million off-lbs) of lead-tin-bismuth alkaline cleaned		
Antimony	0.345	0.154
Lead	0.051	0.024

(m) Alkaline Cleaning Rinse - PSES

Pollutant or pollutant property	Maximum for any one day	Maximum for monthly average
mg/off-kg (lb/million off-lbs) of lead-tin-bismuth alkaline cleaned		
Antimony	0.678	0.302
Lead	0.099	0.047

(n) Swaging Spent Emulsions - PSES

Pollutant or pollutant property	Maximum for any one day	Maximum for monthly average
mg/off-kg (lb/million off-lbs) of lead-tin-bismuth swaged with emulsion		
Antimony	0.005	0.002
Lead	0.0008	0.0004

(o) Degreasing Spent Solvents - PSES

There shall be no discharge of process wastewater pollutants.

(a) Rolling Spent Emulsions - PSNS

Pollutant or pollutant property	Maximum for any one day	Maximum for monthly average
mg/off-kg (lb/million off-lbs) of lead-tin-bismuth rolled with emulsions		
Antimony	0.067	0.030
Lead	0.010	0.005

(b) Rolling Spent Soap Solutions - PSNS

Pollutant or pollutant property	Maximum for any one day	Maximum for monthly average
mg/off-kg (lb/million off-lbs) of lead-tin-bismuth rolled with soap solutions		
Antimony	0.124	0.055
Lead	0.018	0.009

(c) Drawing Spent Neat Oils - PSNS

There shall be no discharge of process wastewater pollutants.

(d) Drawing Spent Emulsions - PSNS

Pollutant or pollutant property	Maximum for any one day	Maximum for monthly average
mg/off-kg (lb/million off-lbs) of lead-tin-bismuth drawn with emulsions		
Antimony	0.076	0.034
Lead	0.011	0.005

(e) Drawing Spent Soap Solutions - PSNS

Pollutant or pollutant property	Maximum for any one day	Maximum for monthly average
mg/off-kg (lb/million off-lbs) of lead-tin-bismuth drawn with soap solutions		
Antimony	0.022	0.010
Lead	0.003	0.002

(f) Extrusion Press and Solution Heat Treatment Contact Cooling Water - PSNS

Pollutant or pollutant property	Maximum for any one day	Maximum for monthly average
mg/off-kg (lb/million off-lbs) of lead-tin-bismuth heat treated		
Antimony	0.414	0.185
Lead	0.061	0.029

(g) Extrusion Press Hydraulic Fluid Leakage - PSNS

Pollutant or pollutant property	Maximum for any one day	Maximum for monthly average
mg/off-kg (lb/million off-lbs) of lead-tin-bismuth extruded		
Antimony	0.158	0.071
Lead	0.023	0.011

(h) Continuous Strip Casting Contact Cooling Water - PSNS

Pollutant or pollutant property	Maximum for any one day	Maximum for monthly average
mg/off-kg (lb/million off-lbs) of lead-tin-bismuth cast by the continuous strip method		
Antimony	0.003	0.001
Lead	0.0004	0.0002

(i) Semi-Continuous Ingot Casting Contact Cooling Water - PSNS

Pollutant or pollutant property	Maximum for any one day	Maximum for monthly average
mg/off-kg (lb/million off-lbs) of lead-tin-bismuth ingot cast by the semi-continuous method		
Antimony	0.009	0.004
Lead	0.001	0.0006

(j) Shot Casting Contact Cooling Water - PSNS

Pollutant or pollutant property	Maximum for any one day	Maximum for monthly average
mg/off-kg (lb/million off-lbs) of lead-tin-bismuth shot cast		
Antimony	0.107	0.048
Lead	0.016	0.008

(k) Shot-Forming Wet Air Pollution Control Scrubber Blowdown - PSNS

Pollutant or pollutant property	Maximum for any one day	Maximum for monthly average
mg/off-kg (lb/million off-lbs) of lead-tin-bismuth shot formed		
Antimony	0.169	0.076
Lead	0.025	0.012

(l) Alkaline Cleaning Spent Baths - PSNS

Pollutant or pollutant property	Maximum for any one day	Maximum for monthly average
mg/off-kg (lb/million off-lbs) of lead-tin-bismuth alkaline cleaned		
Antimony	0.345	0.154
Lead	0.051	0.024

(m) Alkaline Cleaning Rinse - PSNS

Pollutant or pollutant property	Maximum for any one day	Maximum for monthly average
mg/off-kg (lb/million off-lbs) of lead-tin-bismuth alkaline cleaned		
Antimony	0.678	0.302
Lead	0.099	0.047

(n) Swaging Spent Emulsions - PSNS

Pollutant or pollutant property	Maximum for any one day	Maximum for monthly average
mg/off-kg (lb/million off-lbs) of lead-tin-bismuth swaged with emulsion		
Antimony	0.005	0.003
Lead	0.0008	0.0004

(o) Degreasing Spent Solvents - PSNS

There shall be no discharge of process wastewater pollutants.

SUBPART B: PRETREATMENT STANDARDS FOR EXISTING AND PRETREATMENT STANDARDS FOR NEW SOURCES FOR THE MAGNESIUM FORMING SUBCATEGORY

(a) Rolling Spent Emulsions - PSES

Pollutant or pollutant property	Maximum for any one day	Maximum for monthly average
mg/off-kg (lb/million off-lbs) of magnesium rolled with emulsions		
Chromium	0.033	0.014
Zinc	0.109	0.046
Ammonia	9.95	4.37
Fluoride	4.44	1.97

(b) Forging Spent Lubricants - PSES

There shall be no discharge of process wastewater pollutants.

(c) Forging Contact Cooling Water - PSES

Pollutant or pollutant property	Maximum for any one day	Maximum for monthly average
mg/off-kg (lb/million off-lbs) of forged magnesium cooled with water		
Chromium	0.127	0.052
Zinc	0.422	0.177
Ammonia	38.5	17.0
Fluoride	17.2	7.63

(d) Forging Equipment Cleaning Wastewater - PSES

Pollutant or pollutant property	Maximum for any one day	Maximum for monthly averge
mg/off-kg (lb/million off-lbs) of magnesium forged		
Chromium	0.002	0.0007
Zinc	0.006	0.003
Ammonia	0.532	0.234
Fluoride	0.238	0.106

(e) Direct Chill Casting Contact Cooling Water - PSES

Pollutant or pollutant property	Maximum for any one day	Maximum for monthly averge
mg/off-kg (lb/million off-lbs) of magnesium cast with direct chill methods		
Chromium	1.74	0.711
Zinc	5.77	2.41
Ammonia	527	232
Fluoride	235	105

(f) Surface Treatment Spent Baths - PSES

Pollutant or pollutant property	Maximum for any one day	Maximum for monthly average
mg/off-kg (lb/million off-lbs) of magnesium surface treated		
Chromium	0.205	0.084
Zinc	0.681	0.285
Ammonia	62.1	27.3
Fluoride	27.8	12.3

(g) Surface Treatment Rinse - PSES

Pollutant or pollutant property	Maximum for any one day	Maximum for monthly average
mg/off-kg (lb/million off-lbs) of magnesium surface treated		
Chromium	0.832	0.340
Zinc	2.76	1.16
Ammonia	252	111
Fluoride	113	49.9

(h) Sawing or Grinding Spent Emulsions - PSES

Pollutant or pollutant property	Maximum for any one day	Maximum for monthly average
mg/off-kg (lb/million off-lbs) of magnesium sawed or ground		
Chromium	0.009	0.004
Zinc	0.029	0.012
Ammonia	2.60	1.15
Fluoride	1.16	0.515

(i) Degreasing Spent Solvents - PSES

There shall be no discharge of process wastewater pollutants.

(j) Wet Air Pollution Control Scrubber Blowdown - PSES

Pollutant or pollutant propetty	Maximum for any one day	Maximum for monthly average
mg/off-kg (lb/million off-lbs) of magnesium sanded and repaired or forged		
Chromium	0.273	0.112
Zinc	0.904	0.378
Ammonia	82.5	36.3
Fluoride	36.9	16.4

(a) Rolling Spent Emulsions - PSNS

Pollutant or pollutant property	Maximum for any one day	Maximum for monthly average
mg/off-kg (lb/million off-lbs) of magnesium rolled with emulsions		
Chromium	0.028	0.011
Zinc	0.076	0.032
Ammonia	9.95	4.37
Fluoride	4.44	1.97

(b) Forging Spent Lubricants - PSNS

There shall be no discharge of process wastewater pollutants.

(c) Forging Contact Cooling Water - PSNS

Pollutant or pollutant property	Maximum for any one day	Maximum for monthly average
mg/off-kg (lb/million off-lbs) of forged magnesium cooled with water		
Chromium	0.107	0.044
Zinc	0.295	0.122
Ammonia	38.5	17.0
Fluoride	17.2	7.63

(d) Forging Equipment Cleaning Wastewater - PSNS

Pollutant or pollutant property	Maximum for any one day	Maximum for monthly average
mg/off-kg (lb/million off-lbs) of magnesium forged		
Chromium	0.002	0.0006
Zinc	0.004	0.002
Ammonia	0.532	0.234
Fluoride	0.238	0.106

(e) Direct Chill Casting Contact Cooling Water - PSNS

Pollutant or pollutant property	Maximum for any one day	Maximum for monthly average
mg/off-kg (lb/million off-lbs) of magnesium cast with direct chill methods		
Chromium	1.46	0.593
Zinc	4.03	1.66
Ammonia	527	232
Fluoride	235	105

(f) Surface Treatment Spent Baths - PSNS

Pollutant or pollutant property	Maximum for any one day	Maximum for monthly average
mg/off-kg (lb/million off-lbs) of magnesium surface treated		
Chromium	0.173	0.070
Zinc	0.476	0.196
Ammonia	62.1	27.3
Fluoride	27.8	12.3

(g) Surface Treatment Rinse - PSNS

Pollutant or pollutant property	Maximum for any one day	Maximum for monthly average
mg/off-kg (lb/million off-lbs) of magnesium surface treated		
Chromium	0.700	0.284
Zinc	1.93	0.794
Ammonia	252	111
Fluoride	113	49.9

(h) Sawing or Grinding Spent Emulsions - PSNS

Pollutant or pollutant property	Maximum for any one day	Maximum for monthly average
mg/off-kg (lb/million off-lbs) of magnesium sawed or ground		
Chromium	0.007	0.003
Zinc	0.020	0.008
Ammonia	2.60	1.15
Fluoride	1.16	0.515

(i) Degreasing Spent Solvents - PSES

There shall be no discharge of process wastewater pollutants.

(j) Wet Air Pollution Control Scrubber Blowdown - PSNS

Pollutant or pollutant property	Maximum for any one day	Maximum for monthly average
mg/off-kg (lb/million off-lbs) of magnesium sanded and repaired or forged		
Chromium	0.229	0.093
Zinc	0.632	0.260
Ammonia	82.5	36.3
Fluoride	36.9	16.4

SUBPART C: PRETREATMENT STANDARDS FOR EXISTING SOURCES AND PRETREATMENT STANDARDS FOR NEW SOURCES FOR THE NICKEL-COBALT FORMING SUBCATEGORY

(a) Rolling Spent Neat Oils - PSES

There shall be no discharge of process wastewater pollutants.

(b) Rolling Spent Emulsions - PSES

Pollutant or pollutant property	Maximum for any one day	Maximum for monthly average
mg/off-kg (lb/million off-lbs) of nickel-cobalt rolled with emulsions		
Chromium	0.063	0.026
Nickel	0.094	0.063
Fluoride	10.1	4.49

(c) Rolling Contact Cooling Water - PSES

Pollutant or pollutant property	Maximum for any one day	Maximum for monthly average
mg/off-kg (lb/million off-lbs) of nickel-cobalt rolled with water		
Chromium	0.028	0.011
Nickel	0.042	0.028
Fluoride	4.49	1.99

(d) Tube Reducing Spent Lubricants - PSES

There shall be no discharge of process wastewater pollutants.

(e) Drawing Spent Neat Oils - PSES

There shall be no discharge of process wastewater pollutants.

(f) Drawing Spent Emulsions - PSES

Pollutant or pollutant property	Maximum for any one day	Maximum for monthly average
mg/off-kg (lb/million off-lbs) of nickel-cobalt drawn with emulsions		
Chromium	0.036	0.014
Nickel	0.053	0.036
Fluoride	5.68	2.52

(g) Extrusion Spent Lubricants - PSES

There shall be no discharge of process wastewater pollutants.

(h) Extrusion Press or Solution Heat Treatment Contact Cooling Water - PSES

Pollutant or pollutant property	Maximum for any one day	Maximum for monthly average
mg/off-kg (lb/million off-lbs) of extruded nickel-cobalt heat treated		
Chromium	0.031	0.013
Nickel	0.046	0.031
Fluoride	4.95	2.20

(i) Extrusion Press Hydraulic Fluid Leakage - PSES

Pollutant or pollutant property	Maximum for any one day	Maximum for monthly average
mg/off-kg (lb/million off-lbs) of nickel-cobalt extruded		
Chromium	0.086	0.034
Nickel	0.128	0.086
Fluoride	13.8	6.13

(j) Forging Equipment Cleaning Wastewater - PSES

Pollutant or pollutant property	Maximum for any one day	Maximum for monthly average
mg/off-kg (lb/million off-lbs) of nickel-cobalt forged		
Chromium	0.002	0.0006
Nickel	0.002	0.002
Fluoride	0.238	0.106

(k) Forging Contact Cooling Water - PSES

Pollutant or pollutant property	Maximum for any one day	Maximum for monthly average
mg/off-kg (lb/million off-lbs) of forged nickel-cobalt cooled with water		
Chromium	0.018	0.007
Nickel	0.026	0.018
Fluoride	2.82	1.25

(l) Forging Press Hydraulic Fluid Leakage - PSES

Pollutant or pollutant property	Maximum for any one day	Maximum for monthly average
mg/off-kg (lb/million off-lbs) of nickel-cobalt forged		
Chromium	0.069	0.028
Nickel	0.103	0.069
Fluoride	11.2	4.94

(m) Forging Spent Lubricants - PSES

There shall be no discharge of process wastewater pollutants.

(n) Stationary Casting Contact Cooling Water - PSES

Pollutant or pollutant property	Maximum for any one day	Maximum for monthly average
mg/off-kg (lb/million off-lbs) of nickel-cobalt cast with stationary methods		
Chromium	0.448	0.182
Nickel	0.666	0.448
Fluoride	72.0	32.0

(o) Vacuum Melting Steam Condensate - PSES

There shall be no allowance for the discharge of wastewater pollutants.

(p) Metal Powder Production Atomization Wastewater - PSES

Pollutant or pollutant property	Maximum for any one day	Maximum for monthly average
mg/off-kg (lb/million off-lbs) of nickel-cobalt metal powder atomized		
Chromium	0.970	0.393
Nickel	1.44	0.970
Fluoride	156	69.2

(q) Annealing and Solution Heat Treatment Contact Cooling Water - PSES

There shall be no allowance for the discharge of wastewater pollutants.

(r) Wet Air Pollution Control Scrubber Blowdown - PSES

Pollutant or pollutant property	Maximum for any one day	Maximum for monthly average
mg/off-kg (lb/million off-lbs) of nickel-cobalt formed		
Chromium	0.300	0.122
Nickel	0.446	0.300
Fluoride	48.2	21.4

(s) Surface Treatment Spent Baths - PSES

Pollutant or pollutant property	Maximum for any one day	Maximum for monthly average
mg/off-kg (lb/million off-lbs) of nickel-cobalt surface treated		
Chromium	0.346	0.141
Nickel	0.514	0.346
Fluoride	55.7	24.7

(t) Surface Treatment Rinse - PSES

Pollutant or pollutant property	Maximum for any one day	Maximum for monthly average
mg/off-kg (lb/million off-lbs) of nickel-cobalt surface treated		
Chromium	0.873	0.354
Nickel	1.30	0.873
Fluoride	141	62.3

(u) Alkaline Cleaning Spent Baths - PSES

Pollutant or pollutant property	Maximum for any one day	Maximum for monthly average
mg/off-kg (lb/million off-lbs) of nickel-cobalt alkaline cleaned		
Chromium	0.013	0.005
Nickel	0.019	0.013
Fluoride	2.02	0.895

(v) Alkaline Cleaning Rinse - PSES

Pollutant or pollutant property	Maximum for any one day	Maximum for monthly average
mg/off-kg (lb/million off-lbs) of nickel-cobalt alkaline cleaned		
Chromium	0.086	0.035
Nickel	0.128	0.086
Fluoride	13.9	6.15

(w) Molten Salt Rinse - PSES

Pollutant or pollutant property	Maximum for any one day	Maximum for monthly average
mg/off-kg (lb/million off-lbs) of nickel-cobalt treated with molten salt		
Chromium	0.312	0.127
Nickel	0.464	0.312
Fluoride	50.2	22.3

(x) Ammonia Rinse - PSES

Pollutant or pollutant property	Maximum for any one day	Maximum for monthly average
mg/off-kg (lb/million off-lbs) of nickel-cobalt treated with ammonia solution		
Chromium	0.006	0.002
Nickel	0.008	0.006
Fluoride	0.881	0.391

(y) Sawing or Grinding Spent Emulsions - PSES

Pollutant or pollutant property	Maximum for any one day	Maximum for monthly average
mg/off-kg (lb/million off-lbs) of nickel-cobalt sawed or ground with emulsions		
Chromium	0.015	0.006
Nickel	0.022	0.015
Fluoride	2.35	1.04

(z) Sawing or Grinding Rinsewater - PSES

Pollutant or pollutant property	Maximum for any one day	Maximum for monthly average
mg/off-kg (lb/million off-lbs) of sawed or ground nickel-cobalt rinsed		
Chromium	0.067	0.027
Nickel	0.100	0.067
Fluoride	10.8	4.78

(aa) Steam Cleaning Condensate - PSES

Pollutant or pollutant property	Maximum for any one day	Maximum for monthly average
mg/off-kg (lb/million off-lbs) of nickel-cobalt steam cleaned		
Chromium	0.011	0.005
Nickel	0.017	0.011
Fluoride	1.79	0.795

(ab) Hydrostatic Tube Testing and Ultrasonic Testing Wastewater - PSES

There shall be no allowance for the discharge of process wastewater pollutants.

(ac) Degreasing Spent Solvents - PSES

There shall be no discharge of process wastewater pollutants.

(ad) Dye Penetrant Testing Wastewater - PSES

Pollutant or pollutant property	Maximum for any one day	Maximum for monthly average
mg/off-kg (lb/million off-lbs) of nickel-cobalt tested with dye penetrant method		
Chromium	0.079	0.032
Nickel	0.117	0.079
Fluoride	12.7	5.63

(ae) Electrocoating Rinse - PSES

Pollutant or pollutant property	Maximum for any one day	Maximum for monthly average
mg/off-kg (lb/million off-lbs) of nickel-cobalt electrocoated		
Chromium	1.25	0.506
Nickel	1.86	1.25
Fluoride	201	89.0

(af) Miscellaneous Wastewater Sources - PSES

Pollutant or pollutant property	Maximum for any one day	Maximum for monthly average
mg/off-kg (lb/million off-lbs) of nickel-cobalt formed		
Chromium	0.091	0.037
Nickel	0.136	0.091
Fluoride	14.7	6.50

(a) Rolling Spent Neat Oils - PSNS

There shall be no discharge of process wastewater pollutants.

(b) Rolling Spent Emulsions- PSNS

Pollutant or pollutant property	Maximum for any one day	Maximum for monthly average
mg/off-kg (lb/million off-lbs) of nickel-cobalt rolled with emulsions		
Chromium	0.063	0.026
Nickel	0.094	0.063
Fluoride	10.1	4.49

(c) Rolling Contact Cooling Water - PSNS

Pollutant or pollutant property	Maximum for any one day	Maximum for monthly average
mg/off-kg (lb/million off-lbs) of nickel-cobalt rolled with water		
Chromium	0.028	0.012
Nickel	0.042	0.028
Fluoride	4.49	1.99

(d) Tube Reducing Spent Lubricant - PSNS

There shall be no discharge of process wastewater pollutants.

(e) Drawing Spent Neat Oils - PSNS

There shall be no discharge of process wastewater pollutants.

(f) Drawing Spent Emulsions - PSNS

Pollutant or pollutant property	Maximum for any one day	Maximum for monthly average
mg/off-kg (lb/million off-lbs) of nickel-cobalt drawn with emulsions		
Chromium	0.036	0.015
Nickel	0.053	0.036
Fluoride	5.68	2.52

(g) Extrusion Spent Lubricants - PSNS

There shall be no discharge of process wastewater pollutants.

(h) Extrusion Press or Solution Heat Treatment Contact Cooling Water - PSNS

Pollutant or pollutant property	Maximum for any one day	Maximum for monthly average
mg/off-kg (lb/million off-lbs) of extruded nickel-cobalt heat treated		
Chromium	0.031	0.013
Nickel	0.046	0.031
Fluoride	4.95	2.20

(i) Extrusion Press Hydraulic Fluid Leakage - NSPS

Pollutant or pollutant property	Maximum for any one day	Maximum for monthly average
mg/off-kg (lb/million of-lbs) of nickel-cobalt extruded		
Chromium	0.086	0.034
Nickel	0.128	0.086
Fluoride	13.8	6.13

(j) Forging Equipment Cleaning Wastewater - PSNS

Pollutant or pollutant property	Maximum for any one day	Maximum for monthly average
mg/off-kg (lb/million off-lbs) of nickel-cobalt forged		
Chromium	0.002	0.0006
Nickel	0.002	0.002
Fluoride	0.238	0.106

(k) Forging Contact Cooling Water - PSNS

Pollutant or pollutant property	Maximum for any one day	Maximum for monthly average
mg/off-kg (lb/million off-lbs) of forged nickel-cobalt cooled with water		
Chromium	0.018	0.007
Nickel	0.026	0.018
Fluoride	2.82	1.25

(l) Forging Press Hydraulic Fluid Leakage - PSNS

Pollutant or pollutant property	Maximum for any one day	Maximum for monthly average
mg/off-kg (lb/million off-lbs) of nickel-cobalt forged		
Chromium	0.069	0.028
Nickel	0.103	0.069
Fluoride	11.2	4.94

(m) Forging Spent Lubricants - PSNS

There shall be no discharge of process wastewater pollutants.

(n) Stationary Casting Contact Cooling Water - PSNS

Pollutant or pollutant property	Maximum for any one day	Maximum for monthly average
mg/off-kg (lb/million off-lbs) of nickel-cobalt cast with stationary methods		
Chromium	0.448	0.182
Nickel	0.666	0.448
Fluoride	72.0	32.0

(o) Vacuum Melting Steam Condensate - PSNS

There shall be no allowance for the discharge of process wastewater pollutants.

(p) Metal Powder Production Atomization Wastewater - PSNS

Pollutant or pollutant property	Maximum for any one day	Maximum for monthly average
mg/off-kg (lb/million off-lbs) of nickel-cobalt metal powder atomized		
Chromium	0.970	0.393
Nickel	1.44	0.970
Fluoride	156	69.2

(q) Annealing and Solution Heat Treatment Contact Cooling Water - PSNS

There shall be no allowance for the discharge of process wastewater pollutant.

(r) Wet Air Pollution Control Scrubber Blowdown - PSNS

Pollutant or pollutant property	Maximum for any one day	Maximum for monthly average
mg/off-kg (lb/million off-lbs) of nickel-cobalt formed		
Chromium	0.300	0.122
Nickel	0.450	0.300
Fluoride	48.2	21.4

(s) Surface Treatment Spent Baths- PSNS

Pollutant or pollutant property	Maximum for any one day	Maximum for monthly average
mg/off-kg (lb/million off-lbs) of nickel-cobalt surface treated		
Chromium	0.346	0.141
Nickel	0.515	0.346
Fluoride	55.7	24.7

(t) Surface Treatment Rinse - PSNS

Pollutant or pollutant property	Maximum for any one day	Maximum for monthly average
mg/off-kg (lb/million off-lbs) of nickel-cobalt surface treated		
Chromium	0.874	0.354
Nickel	1.30	0.873
Fluoride	141	62.3

(u) Alkaline Cleaning Spent Baths - PSNS

Pollutant or pollutant property	Maximum for any one day	Maximum for monthly average
mg/off-kg (lb/million off-lbs) of nickel-cobalt alkaline cleaned		
Chromium	0.013	0.005
Nickel	0.019	0.013
Fluoride	2.02	0.895

(v) Alkaline Cleaning Rinse - PSNS

Pollutant or pollutant property	Maximum for any one day	Maximum for monthly average
mg/off-kg (lb/million off-lbs) of nickel-cobalt alkaline cleaned		
Chromium	0.086	0.035
Nickel	0.128	0.086
Fluoride	13.9	6.15

(w) Molten Salt Rinse - PSNS

Pollutant or pollutant property	Maximum for any one day	Maximum for monthly average
mg/off-kg (lb/million off-lbs) of nickel-cobalt treated with molten salt		
Chromium	0.312	0.127
Nickel	0.464	0.312
Fluoride	50.2	22.3

(x) Ammonia Rinse - PSNS

Pollutant or pollutant property	Maximum for any one day	Maximum for monthly average
mg/off-kg (lb/million off-lbs) of nickel-cobalt treated with ammonia solution		
Chromium	0.006	0.002
Nickel	0.008	0.006
Fluoride	0.881	0.391

(y) Sawing or Grinding Spent Emulsions - PSNS

Pollutant or pollutant property	Maximum for any one day	Maximum for monthly average
mg/off-kg (lb/million off-lbs) of nickel-cobalt sawed or ground with emulsions		
Chromium	0.015	0.006
Nickel	0.022	0.015
Fluoride	2.35	1.04

(z) Sawing or Grinding Rinse - PSNS

Pollutant or pollutant property	Maximum for any one day	Maximum for monthly average
mg/off-kg (lb/million off-lbs) of sawed or ground nickel-cobalt rinsed		
Chromium	0.067	0.027
Nickel	0.100	0.067
Fluoride	10.8	4.78

(aa) Steam Cleaning Condensate - PSNS

Pollutant or pollutant property	Maximum for any one day	Maximum for monthly average
mg/off-kg (lb/million off-lbs) of nickel-cobalt steam cleaned		
Chromium	0.011	0.005
Nickel	0.017	0.011
Fluoride	1.79	0.795

(ab) Hydrostatic Tube Testing and Ultrasonic Testing Wastewater - PSNS

There shall be no allowance discharge of process wastewater pollutants.

(ac) Degreasing Spent Solvents - PSNS

There shall be no discharge of process wastewater pollutants.

(ad) Dye Penetrant Testing Wastewater - PSNS

Pollutant or pollutant property	Maximum for any one day	Maximum for monthly average
mg/off-kg (lb/million off-lbs) of nickel-cobalt tested with dye penetrant method		
Chromium	0.079	0.032
Nickel	0.117	0.079
Fluoride	12.7	5.63

(ae) Electrocoating Rinse - PSNS

Pollutant or pollutant property	Maximum for any one day	Maximum for monthly average
mg/off-kg (lb/million off-lbs) of nickel-cobalt electrocoated		
Chromium	1.25	0.506
Nickel	1.86	0.125
Fluoride	201	89.0

(af) Miscellaneous Wastewater Sources - PSNS

Pollutant or pollutant property	Maximum for any one day	Maximum for monthly average
mg/off-kg (lb/million off-lbs) of nickel-cobalt formed		
Chromium	0.091	0.037
Nickel	0.136	0.091
Fluoride	14.7	6.50

SUBPART D: PRETREATMENT STANDARDS FOR EXISTING SOURCES AND PRETREATMENT STANDARDS FOR NEW SOURCES FOR THE PRECIOUS METALS FORMING SUBCATEGORY

(a) Rolling Spent Neat Oils - PSES

There shall be no discharge of process wastewater pollutants.

(b) Rolling Spent Emulsions - PSES

Pollutant or pollutant property	Maximum for any one day	Maximum for monthly average
mg/off-kg (lb/million off-lbs) of precious metals rolled with emulsions		
Cadmium	0.026	0.012
Copper	0.147	0.077
Cyanide	0.023	0.010
Silver	0.032	0.013

(c) Drawing Spent Neat Oils - PSES

There shall be no discharge of process wastewater pollutants.

(d) Drawing Spent Emulsions - PSES

Pollutant or pollutant property	Maximum for any one day	Maximum for monthly average
mg/off-kg (lb/million off-lbs) of precious metals drawn with emulsions		
Cadmium	0.016	0.007
Copper	0.091	0.048
Cyanide	0.014	0.006
Silver	0.020	0.008

(e) Drawing Spent Soap Solutions - PSES

Pollutant or pollutant property	Maximum for any one day	Maximum for monthly average
mg/off-kg (lb/million off-lbs) of precious metals drawn with soap solutions		
Cadmium	0.001	0.0005
Copper	0.006	0.003
Cyanide	0.0009	0.0004
Silver	0.002	0.0006

(f) Metal Powder Production Atomization Wastewater - PSES

Pollutant or pollutant property	Maximum for any one day	Maximum for monthly average
mg/off-kg (lb/million off-lbs) of precious metals powder wet atomized		
Cadmium	2.27	1.00
Copper	12.7	6.68
Cyanide	1.94	0.802
Silver	2.74	1.14

(g) Heat Treatment Contact Cooling Water - PSES

Pollutant or pollutant property	Maximum for any one day	Maximum for monthly average
mg/off-kg (lb/million off-lbs) of precious metals heat treated		
Cadmium	0.142	0.063
Copper	0.793	0.417
Cyanide	0.121	0.050
Silver	0.171	0.071

(h) Semi-Continuous and Continuous Casting Contact Cooling Water - PSES

Pollutant or pollutant property	Maximum for any one day	Maximum for monthly average
mg/off-kg (lb/million off-lbs) of precious metals cast by the semi-continuous or continuous method		
Cadmium	0.350	0.155
Copper	1.96	1.03
Cyanide	0.299	0.124
Silver	0.423	0.175

(i) Stationary Casting Contact Cooling Water - PSES

There shall be no discharge of process wastewater pollutants.

(j) Direct Chill Casting Contact Cooling Water - PSES

Pollutant or pollutant property	Maximum for any one day	Maximum for monthly average
mg/off-kg (lb/million off-lbs) of precious metals cast by the direct chill method		
Cadmium	0.367	0.162
Copper	2.05	1.08
Cyanide	0.313	0.130
Silver	0.443	0.184

(k) Shot Casting Contact Cooling Water - PSES

Pollutant or pollutant property	Maximum for any one day	Maximum for monthly average
mg/off-kg (lbmillion off-lbs) of precious metals shot cast		
Cadmium	0.125	0.055
Copper	0.698	0.367
Cyanide	0.107	0.044
Silver	0.151	0.063

(l) Wet Air Pollution Control Scrubber Blowdown - PSES

There shall be no discharge of process wastewater pollutants.

(m) Pressure Bonding Contact Cooling Water - PSES

Pollutant or pollutant property	Maximum for any one day	Maximum for monthly average
mg/off-kg (lb/million off-lbs) of precious metal and base metal pressure bonded		
Cadmium	0.029	0.013
Copper	0.159	0.084
Cyanide	0.024	0.010
Silver	0.034	0.014

(n) Surface Treatment Spent Baths - PSES

Pollutant or pollutant property	Maximum for any one day	Maximum for monthly average
mg/off-kg (lb/million off-lbs) of precious metals surface treated		
Cadmium	0.033	0.015
Copper	0.183	0.097
Cyanide	0.028	0.012
Silver	0.040	0.017

(o) Surface Treatment Rinse - PSES

Pollutant or pollutant property	Maximum for any one day	Maximum for monthly average
mg/off-kg (lb/million off-lbs) of precious metals surface treated		
Cadmium	0.210	0.093
Copper	1.17	0.616
Cyanide	0.179	0.074
Silver	0.253	0.105

(p) Alkaline Cleaning Spent Baths - PSES

Pollutant or pollutant property	Maximum for any one day	Maximum for monthly average
mg/off-kg (lb/million off-lbs) of precious metals alkaline cleaned		
Cadmium	0.021	0.009
Copper	0.114	0.060
Cyanide	0.018	0.007
Silver	0.025	0.010

(q) Alkaline Cleaning Rinse - PSES

Pollutant or pollutant property	Maximum for any one day	Maximum for monthly average
mg/off-kg (lb/million off-lbs) of precious metals alkaline cleaned		
Cadmium	0.381	0.168
Copper	2.13	1.12
Cyanide	0.325	0.135
Silver	0.459	0.191

(r) Alkaline Cleaning Prebonding Wastewater - PSES

Pollutant or pollutant property	Maximum for any one day	Maximum for monthly average
mg/off-kg (lb/million off-lbs) of precious metal and base metal cleaned prior to bonding		
Cadmium	0.400	0.174
Copper	2.210	1.16
Cyanide	0.337	0.139
Silver	0.476	0.197

(s) Tumbling or Burnishing Wastewater - PSES

Pollutant or pollutant property	Maximum for any one day	Maximum for monthly average
mg/off-kg (lb/million off-lbs) of precious metals tumbled or burnished		
Cadmium	0.412	0.182
Copper	2.300	1.21
Cyanide	0.351	0.145
Silver	0.496	0.206

(t) Sawing or Grinding Spent Neat Oils - PSES

There shall be no discharge of process wastewater pollutants.

(u) Sawing or Grinding Spent Emulsions - PSES

Pollutant or pollutant property	Maximum for any one day	Maximum for monthly average
mg/off-kg (lb/million off-lbs) of precious metals sawed or ground with emulsions		
Cadmium	0.032	0.014
Copper	0.178	0.094
Cyanide	0.027	0.011
Silver	0.038	0.016

(v) Degreasing Spent Solvents - PSNS

There shall be no discharge of process wastewater pollutants.

(a) Rolling Spent Neat Oils - PSNS

There shall be no discharge of process wastewater pollutants.

(b) Rolling Spent Emulsions - PSNS

Pollutant or pollutant property	Maximum for any one day	Maximum for monthly average
mg/off-kg (lb/million off-lbs) of precious metals rolled with emulsions		
Cadmium	0.026	0.012
Copper	0.147	0.077
Cyanide	0.023	0.010
Silver	0.032	0.013

(c) Drawing Spent Neat Oils - PSNS

There shall be no discharge of process wastewater pollutants.

(d) Drawing Spent Emulsions - PSNS

Pollutant or pollutant property	Maximum for any one day	Maximum for monthly average
mg/off-kg (lb/million off-lbs) of precious metals drawn with emulsions		
Cadmium	0.016	0.007
Copper	0.091	0.048
Cyanide	0.014	0.006
Silver	0.020	0.008

(e) Drawing Spent Soap Solutions - PSNS

Pollutant or pollutant property	Maximum for any one day	Maximum for monthly average
mg/off-kg (lb/million off-lbs) of precious metals drawn with soap solutions		
Cadmium	0.001	0.0005
Copper	0.006	0.003
Cyanide	0.0009	0.0004
Silver	0.002	0.0006

(f) Metal Powder Production Wet Atomization Wastewater - PSNS

Pollutant or pollutant property	Maximum for any one day	Maximum for monthly average
mg/off-kg (lb/million off-lbs) of precious metals powder wet atomized		
Cadmium	2.27	1.00
Copper	12.7	6.68
Cyanide	1.94	0.802
Silver	2.74	1.14

(g) Heat Treatment Contact Cooling Water - PSNS

Pollutant or pollutant property	Maximum for any one day	Maximum for monthly average
mg/off-kg (lb/million off-lbs) of extruded precious metals heat treated		
Cadmium	0.142	0.063
Copper	0.793	0.417
Cyanide	0.121	0.050
Silver	0.171	0.071

(h) Semi-Continuous and Continuous Casting Contact Cooling Water - PSNS

Pollutant or pollutant property	Maximum for any one day	Maximum for monthly average
mg/off-kg (lb/million off-lbs) of precious metals cast by the semi-continuous or continuous method		
Cadmium	0.350	0.155
Copper	1.96	1.03
Cyanide	0.299	0.124
Silver	0.423	0.175

(i) Stationary Casting Contact Cooling Water - PSNS

There shall be no discharge of process wastewater pollutants.

(j) Direct Chill Casting Contact Cooling Water - PSNS

Pollutant or pollutant property	Maximum for any one day	Maximum for monthly average
mg/off-kg (lb/million off-lbs) of precious metals cast by the direct chill method		
Cadmium	0.367	0.162
Copper	2.05	1.08
Cyanide	0.313	0.130
Silver	0.443	0.184

(k) Shot Casting Contact Cooling Water - PSNS

Pollutant or pollutant property	Maximum for any one day	Maximum for monthly average
mg/off-kg (lb/million off-lbs) of precious metals shot cast		
Cadmium	0.125	0.055
Copper	0.698	0.367
Cyanide	0.107	0.044
Silver	0.151	0.0631

(l) Wet Air Pollution Control Scrubber Blowdown - PSNS

There shall be no discharge of process wastewater pollutants.

(m) Pressure Bonding Contact Cooling Water - PSNS

Pollutant or pollutant property	Maximum for any one day	Maximum for monthly average
mg/off-kg (lb/million off-lbs) of precious metal and base metal pressure bonded		
Cadmium	0.029	0.013
Copper	0.159	0.084
Cyanide	0.024	0.010
Silver	0.034	0.014

(n) Surface Treatment Spent Baths - PSNS

Pollutant or pollutant property	Maximum for any one day	Maximum for monthly average
mg/off-kg (lb/million off-lbs) of precious metals surface treated		
Cadmium	0.033	0.015
Copper	0.183	0.097
Cyanide	0.028	0.012
Silver	0.040	0.017

(o) Surface Treatment Rinse - PSNS

Pollutant or pollutant property	Maximum for any one day	Maximum for monthly average
mg/off-kg (lb/million off-lbs) of precious metals surface treated		
Cadmium	0.210	0.093
Copper	1.17	0.616
Cyanide	0.179	0.074
Silver	0.253	0.105

(p) Alkaline Cleaning Spent Baths - PSNS

Pollutant or pollutant property	Maximum for any one day	Maximum for monthly average
mg/off-kg (lb/million off-lbs) of precious metals alkaline cleaned		
Cadmium	0.021	0.009
Copper	0.114	0.060
Cyanide	0.018	0.007
Silver	0.025	0.010

(q) Alkaline Cleaning Rinse - PSNS

Pollutant or pollutant property	Maximum for any one day	Maximum for monthly average
mg/off-kg (lb/million off-lbs) of precious metals alkaline cleaned		
Cadmium	0.381	0.168
Copper	2.13	1.12
Cyanide	0.325	0.135
Silver	0.459	0.191

(r) Alkaline Cleaning Pre-Bonding Wastewater - PSNS

Pollutant or pollutant property	Maximum for any one day	Maximum for monthly average
mg/off-kg (lb/million off-lbs) of precious metal and base metal cleaned prior to bonding		
Cadmium	0.400	0.174
Copper	2.21	1.16
Cyanide	0.337	0.139
Silver	0.476	0.197

(s) Tumbling or Burnishing Wastewater - PSNS

Pollutant or pollutant property	Maximum for any one day	Maximum for monthly average
mg/off-kg (lb/million off-lbs) of precious metals tumbled or burnished		
Cadmium	0.412	0.182
Copper	2.30	1.21
Cyanide	0.351	0.145
Silver	0.496	0.206

(t) Sawing or Grinding Spent Neat Oils - PSNS

There shall be no discharge of process wastewater pollutants.

(u) Sawing or Grinding Spent Emulsions - PSNS

Pollutant or pollutant property	Maximum for any one day	Maximum for monthly average
mg/off-kg (lb/million off-lbs) of precious metals sawed or ground with emulsions		
Cadmium	0.032	0.014
Copper	0.178	0.094
Cyanide	0.027	0.011
Silver	0.038	0.016

(v) Degreasing Spent Solvents - PSNS

There shall be no discharge of process wastewater pollutants.

SUBPART E: PRETREATMENT STANDARDS FOR EXISTING SOURCES AND PRETREATMENT STANDARDS FOR NEW SOURCES FOR THE REFRACTORY METALS FORMING SUBCATEGORY

(a) Rolling Spent Neat Oils and Graphite Based Lubricants - PSES

There shall be no discharge of process wastewater pollutants.

(b) Rolling Spent Emulsions - PSES

Pollutant or pollutant property	Maximum for any one day	Maximum for monthly average
mg/off-kg (lb/million off-lbs) of refractory metals rolled with emulsions		
Copper	0.815	0.429
Nickel	0.824	0.545
Fluoride	25.5	11.4
Molybdenum	2.84	1.47

(c) Drawing Spent Lubricants - PSES

There shall be no discharge of process wastewater pollutants.

(d) Extrusion Spent Lubricants - PSES

There shall be no discharge of process wastewater pollutants.

(e) Extrusion Press Hydraulic Fluid Leakage - PSES

Pollutant or pollutant property	Maximum for any one day	Maximum for monthly average
mg/off-kg (lb/million off-lbs) of refractory metals extruded		
Copper	2.26	1.19
Nickel	2.29	1.51
Fluoride	70.8	31.4
Molybdenum	7.87	4.07

(f) Forging Spent Lubricants - PSES

There shall be no discharge of process wastewater pollutants.

(g) Forging Contact Cooling Water - PSES

Pollutant or pollutant property	Maximum for any one day	Maximum for monthly average
mg/off-kg (lb/million off-lbs) of forged refractory metals cooled with water		
Copper	0.062	0.033
Nickel	0.062	0.041
Fluoride	1.92	0.853
Molybdenum	0.214	0.111

(h) Equipment Cleaning Wastewater - PSES

Pollutant or pollutant property	Maximum for any one day	Maximum for monthly average
mg/off-kg (lb/million off-lbs) of refractory metals formed		
Copper	0.259	0.136
Nickel	0.261	0.173
Fluoride	8.09	3.59
Molybdenum	0.899	0.465

(i) Metal Powder Production Wastewater - PSES

Pollutant or pollutant property	Maximum for any one day	Maximum for monthly average
mg/off-kg (lb/million off-lbs) of refractory metals powder produced		
Copper	0.534	0.281
Nickel	0.540	0.357
Fluoride	16.7	7.42
Molybdenum	1.86	0.961

(j) Metal Powder Production Floor Wash Wastewater - PSES

There shall be no discharge of process wastewater pollutants.

(k) Metal Powder Pressing Spent Lubricants - PSES

There shall be no discharge of process wastewater pollutants.

(l) Surface Treatment Spent Baths - PSES

Pollutant or pollutant property	Maximum for any one day	Maximum for monthly average
mg/off-kg (lb/million off-lbs) of refractory metals surface treated		
Copper	0.739	0.389
Nickel	0.747	0.494
Fluoride	23.2	10.3
Molybdenum	2.57	1.33

(m) Surface Treatment Rinsewater - PSES

Pollutant or pollutant property	Maximum for any one day	Maximum for monthly average
mg/off-kg (lb/million off-lbs) of refractory metals surface treated		
Copper	23.0	12.1
Nickel	23.3	15.4
Fluoride	720	320
Molybdenum	80.0	41.4

(n) Alkaline Cleaning Spent Baths - PSES

Pollutant or pollutant property	Maximum for any one day	Maximum for monthly average
mg/off-kg (lb/million off-lbs) of refractory metals alkaline cleaned		
Copper	0.635	0.334
Nickel	0.642	0.424
Fluoride	19.9	8.82
Molybdenum	2.21	1.14

(o) Alkaline Cleaning Rinse - PSES

Pollutant or pollutant property	Maximum for any one day	Maximum for monthly average
mg/off-kg (lb/million off-lbs) of refractory metals alkaline cleaned		
Copper	15.5	8.16
Nickel	15.7	10.4
Fluoride	486	216.0
Molybdenum	54.0	27.9

(p) Molten Salt Rinse - PSES

Pollutant or pollutant property	Maximum for any one day	Maximum for monthly average
mg/off-kg (lb/million off-lbs) of refractory metals treated with molten salt		
Copper	1.20	0.633
Nickel	1.22	0.804
Fluoride	37.7	16.7
Molybdenum	4.19	2.17

(q) Tumbling or Burnishing Wastewater - PSES

Pollutant or pollutant property	Maximum for any one day	Maximum for monthly average
mg/off-kg (lb/million off-lbs) of refractory metals tumbled or burnished		
Copper	2.38	1.25
Nickel	2.40	1.59
Fluoride	74.4	33.0
Molybdenum	8.27	4.28

(r) Sawing or Grinding Spent Neat Oils - PSES

There shall be no discharge of process wastewater pollutants.

(s) Sawing or Grinding Spent Emulsions - PSES

Pollutant or pollutant property	Maximum for any one day	Maximum for monthly average
mg/off-kg (lb/million off-lbs) of refractory metals sawed or ground with emulsions		
Copper	0.565	0.297
Nickel	0.570	0.377
Fluoride	17.7	7.84
Molybdenum	1.97	1.02

(t) Sawing or Grinding Contact Cooling Water - PSES

Pollutant or pollutant property	Maximum for any one day	Maximum for monthly average
mg/off-kg (lb/million off-lbs) of refractory metals sawed or ground with contact cooling water		
Copper	4.62	2.43
Nickel	4.67	3.09
Fluoride	145	64.2
Molybdenum	16.1	8.31

(u) Sawing or Grinding Rinse - PSES

Pollutant or pollutant property	Maximum for any one day	Maximum for monthly average
mg/off-kg (lb/million off-lbs) of sawed or ground refractory metals rinsed		
Copper	0.026	0.014
Nickel	0.026	0.017
Fluoride	0.804	0.357
Molybdenum	0.089	0.046

(v) Wet Air Pollution Control Blowdown - PSES

Pollutant or pollutant property	Maximum for any one day	Maximum for monthly average
mg/off-kg (lb/million off-lbs) of refractory metals sawed, surface coated or surface treated		
Copper	1.50	0.787
Nickel	1.51	1.00
Fluoride	46.9	20.8
Molybdenum	5.20	2.69

(w) Miscellaneous Wastewater Sources - PSES

Pollutant or pollutant property	Maximum for any one day	Maximum for monthly average
mg/off-kg (lb/million off-lbs) of refractory metals formed		
Copper	0.656	0.345
Nickel	0.663	0.438
Fluoride	20.6	9.11
Molybdenum	2.28	1.18

(x) Dye Penetrant Testing Wastewater - PSES

Pollutant or pollutant property	Maximum for any one day	Maximum for monthly average
mg/off-kg (lb/million off-lbs) of refractory metals product tested		
Copper	0.148	0.078
Nickel	0.149	0.099
Fluoride	4.62	2.05
Molybdenum	0.513	0.266

(y) Degreasing Spent Solvents - PSES

There shall be no discharge of process wastewater pollutants.

(a) Rolling Spent Neat Oils and Graphite Based Lubricants - PSNS

There shall be no discharge of process wastewater pollutants.

(b) Rolling Spent Emulsions - PSNS

Pollutant or pollutant property	Maximum for any one day	Maximum for monthly average
mg/off-kg (lb/million off-lbs) of refractory metals rolled with emulsions		
Copper	0.549	0.262
Nickel	0.236	0.159
Fluoride	25.5	11.3
Molybdenum	2.16	0.957

(c) Drawing Spent Lubricants - PSNS

There shall be no discharge of process wastewater pollutants.

(d) Extrusion Spent Lubricants - NSPS

There shall be no discharge of process wastewater pollutants.

(e) Extrusion Press Hydraulic Fluid Leakage - PSNS

Pollutant or pollutant property	Maximum for any one day	Maximum for monthly average
mg/off-kg (lb/million off-lbs) of refractory metals extruded		
Copper	1.53	0.726
Nickel	0.655	0.441
Fluoride	70.8	31.4
Molybdenum	5.99	2.66

(f) Forging Spent Lubricants - PSNS

There shall be no discharge of process wastewater pollutants.

(g) Forging Contact Cooling Water - PSNS

Pollutant or pollutant property	Maximum for any one day	Maximum for monthly average
mg/off-kg (lb/million off-lbs) of forged refractory metals cooled with water		
Copper	0.041	0.020
Nickel	0.018	0.012
Fluoride	1.92	0.853
Molybdenum	0.163	0.072

(h) Equipment Cleaning Wastewater - PSNS

Pollutant or pollutant property	Maximum for any one day	Maximum for monthly average
mg/off-kg (lb/million off-lbs) of refractory metals formed		
Copper	0.174	0.083
Nickel	0.075	0.051
Fluoride	8.09	3.59
Molybdenum	0.684	0.303

(i) Metal Powder Production Wastewater - PSNS

Pollutant or pollutant property	Maximum for any one day	Maximum for monthly average
mg/off-kg (lb/million off-lbs) of refractory metals powder produced		
Copper	0.360	0.172
Nickel	0.155	0.104
Fluoride	16.7	7.42
Molybdenum	1.42	0.627

(j) Metal Powder Production Floor Wash Wastewater - PSNS

There shall be no discharge of process wastewater pollutants.

(k) Metal Powder Pressing Spent Lubricants - PSNS

There shall be no discharge of process wastewater pollutants.

(l) Surface Treatment Spent Baths - PSNS

Pollutant or pollutant property	Maximum for any one day	Maximum for monthly average
mg/off-kg (lb/million off-lbs) of refractory metals surface treated		
Copper	0.498	0.237
Nickel	0.214	0.144
Fluoride	23.2	10.3
Molybdenum	1.96	0.868

(m) Surface Treatment Rinse - PSNS

Pollutant or pollutant property	Maximum for any one day	Maximum for monthly average
mg/off-kg (lb/million off-lbs) of refractory metals surface treated		
Copper	15.5	7.38
Nickel	6.66	4.48
Fluoride	720	320
Molybdenum	60.9	27.0

(n) Alkaline Cleaning Spent Baths - PSNS

Pollutant or pollutant property	Maximum for any one day	Maximum for monthly average
mg/off-kg (lb/million off-lbs) of refractory metals alkaline cleaned		
Copper	0.428	0.204
Nickel	0.184	0.124
Fluoride	19.9	8.82
Molybdenum	1.68	0.745

(o) Alkaline Cleaning Rinse - PSNS

Pollutant or pollutant property	Maximum for any one day	Maximum for monthly average
mg/off-kg (lb/million off-lbs) of refractory metals alkaline cleaned		
Copper	10.5	4.98
Nickel	4.49	3.02
Fluoride	486	216
Molybdenum	41.1	18.2

(p) Molten Salt Rinse - PSNS

Pollutant or pollutant property	Maximum for any one day	Maximum for monthly average
mg/off-kg (lb/million off-lbs) of refractory metals treated with molten salt		
Copper	0.810	0.386
Nickel	0.348	0.234
Fluoride	37.7	16.7
Molybdenum	3.19	1.41

(q) Tumbling or Burnishing Wastewater - PSNS

Pollutant or pollutant property	Maximum for any one day	Maximum for monthly average
mg/off-kg (lb/million off-lbs) of refractory metals tumbled or burnished		
Copper	1.60	0.763
Nickel	0.688	0.463
Fluoride	74.4	33.0
Molybdenum	6.29	2.79

(r) Sawing or Grinding Spent Neat Oils - PSNS

There shall be no discharge of process wastewater pollutants.

(s) Sawing or Grinding Spent Emulsions - PSNS

Pollutant or pollutant property	Maximum for any one day	Maximum for monthly average
mg/off-kg (lb/million off-lbs) of refractory metals sawed or ground with emulsions		
Copper	0.380	0.181
Nickel	0.164	0.110
Fluoride	17.7	7.84
Molybdenum	1.50	0.663

(t) Sawing or Grinding Contact Cooling Water - PSNS

Pollutant or pollutant property	Maximum for any one day	Maximum for monthly average
mg/off-kg (lb/million off-lbs) of refractory metals sawed or ground with contact cooling water		
Copper	3.11	1.48
Nickel	1.34	0.899
Fluoride	145	64.2
Molybdenum	12.2	5.42

(u) Sawing or Grinding Rinse - PSNS

Pollutant or pollutant property	Maximum for any one day	Maximum for monthly average
mg/off-kg (lb/million off-lbs) of sawed or ground refractory metals rinsed		
Copper	0.018	0.009
Nickel	0.008	0.005
Fluoride	0.803	0.357
Molybdenum	0.068	0.030

(v) Wet Air Pollution Control Blowdown - PSNS

Pollutant or pollutant property	Maximum for any one day	Maximum for monthly average
mg/off-kg (lb/million off-lbs) of refractory metals sawed, ground, surface coated or surface treated		
Copper	1.01	0.480
Nickel	0.433	0.291
Fluoride	46.8	20.8
Molybdenum	3.96	1.76

(w) Miscellaneous Wastewater Source - PSNS

Pollutant or pollutant property	Maximum for any one day	Maximum for monthly average
mg/off-kg (lb/million off-lbs) of refractory metals formed		
Copper	0.442	0.211
Nickel	0.190	0.128
Fluoride	20.6	9.11
Molybdenum	1.74	0.770

(x) Dye Penetrant Testing Wastewater - PSNS

Pollutant or pollutant property	Maximum for any one day	Maximum for monthly average
mg/off-kg (lb/million off-lbs) of refractory metals product tested		
Copper	0.100	0.048
Nickel	0.043	0.029
Fluoride	4.62	2.05
Molybdenum	0.391	0.173

(y) Degreasing Spent Solvents - PSNS

There shall be no discharge of process wastewater pollutants.

SUBPART F: PRETREATMENT STANDARDS FOR EXISTING SOURCES AND PRETREATMENT STANDARDS FOR NEW SOURCES FOR THE TITANIUM FORMING SUBCATEGORY

(a) Rolling Spent Neat Oils - PSES

There shall be no discharge of process wastewater pollutants.

(b) Rolling Contact Cooling Water - PSES

Pollutant or pollutant property	Maximum for any one day	Maximum for monthly average
mg/off-kg (lb/million off-lbs) of titanium rolled with contact cooling water		
Cyanide	0.142	0.059
Lead	0.205	0.098
Zinc	0.713	0.298
Ammonia	65.1	28.6
Fluoride	29.1	12.9

(c) Drawing Spent Neat Oils - PSES

There shall be no discharge of process wastewater pollutants.

(d) Extrusion Spent Neat Oils - PSES

There shall be no discharge of process wastewater pollutants.

(e) Extrusion Spent Emulsions - PSES

Pollutant or pollutant property	Maximum for any one day	Maximum for monthly average
mg/off-kg (lb/million off-lbs) of titanium extruded		
Cyanide	0.021	0.009
Lead	0.030	0.015
Zinc	0.105	0.044
Ammonia	9.59	4.22
Fluoride	4.28	1.90

(f) Extrusion Press Hydraulic Fluid Leakage - PSES

Pollutant or pollutant property	Maximum for any one day	Maximum for monthly average
mg/off-kg (lb/million off-lbs) of titanium extruded		
Cyanide	0.052	0.022
Lead	0.075	0.036
Zinc	0.260	0.109
Ammonia	23.7	10.5
Fluoride	10.6	4.70

(g) Forging Spent Lubricants - PSES

There shall be no discharge of process wastewater pollutants.

(h) Forging Contact Cooling Water - PSES

Pollutant or pollutant property	Maximum for any one day	Maximum for monthly average
mg/off-kg (lb/million off-lbs) of forged titanium cooled with water		
Cyanide	0.029	0.012
Lead	0.042	0.020
Zinc	0.146	0.061
Ammonia	13.3	5.86
Fluoride	5.95	2.64

(i) Forging Equipment Cleaning Wastewater - PSES

Pollutant or pollutant property	Maximum for any one day	Maximum for monthly average
mg/off-kg (lb/million off-lbs) of titanium forged		
Cyanide	0.012	0.005
Lead	0.017	0.008
Zinc	0.059	0.025
Ammonia	5.33	2.35
Fluoride	2.38	1.06

(j) Forging Press Hydraulic Fluid Leakage - PSES

Pollutant or pollutant property	Maximum for any one day	Maximum for monthly average
mg/off-kg (lb/million off-lbs) of titanium forged		
Cyanide	0.293	0.121
Lead	0.424	0.202
Zinc	1.48	0.616
Ammonia	135	59.2
Fluoride	60.1	26.7

(k) Tube Reducing Spent Lubricants - PSES

There shall be no discharge of process wastewater pollutants.

(l) Heat Treatment Contact Cooling Water - PSES

There shall be no allowance for the discharge of process wastewater pollutants.

(m) Surface Treatment Spent Baths - PSES

Pollutant or pollutant property	Maximum for any one day	Maximum for monthly average
mg/off-kg (lb/million off-lbs) of titanium surface treated		
Cyanide	0.061	0.025
Lead	0.088	0.042
Zinc	0.304	0.127
Ammonia	27.7	12.2
Fluoride	12.4	5.49

(n) Surface Treatment Rinse - PSES

Pollutant or pollutant property	Maximum for any one day	Maximum for monthly average
mg/off-kg (lb/million off-lbs) of titanium surface treated		
Cyanide	0.847	0.351
Lead	1.23	0.584
Zinc	4.27	1.78
Ammonia	389	171
Fluoride	174	77.1

(o) Wet Air Pollution Control Scrubber Blowdown - PSES

Pollutant or pollutant property	Maximum for any one day	Maximum for monthly average
mg/off-kg (lb/million off-lbs) of titanium surface treated or forged		
Cyanide	0.062	0.026
Lead	0.090	0.043
Zinc	0.313	0.131
Ammonia	28.5	12.6
Fluoride	12.8	5.65

(p) Alkaline Cleaning Spent Baths - PSES

Pollutant or pollutant property	Maximum for any one day	Maximum for monthly average
mg/off-kg (lb/million off-lbs) ot titanium alkaline cleaned		
Cyanide	0.070	0.029
Lead	0.101	0.048
Zinc	0.351	0.147
Ammonia	32.0	14.1
Fluoride	14.3	6.34

(q) Alkaline Cleaning Rinse - PSES

Pollutant or pollutant property	Maximum for any one day	Maximum for monthly average
mg/off-kg (lb/million off-lbs) of titanium alkaline cleaned		
Cyanide	0.080	0.033
Lead	0.116	0.055
Zinc	0.403	0.169
Ammonia	36.8	16.2
Fluoride	16.4	7.29

(r) Molten Salt Rinse - PSES

Pollutant or pollutant property	Maximum for any one day	Maximum for monthly average
mg/off-kg (lb/million off-lbs) of titanium treated with molten salt		
Cyanide	0.277	0.115
Lead	0.401	0.191
Zinc	1.40	0.583
Ammonia	128	56.0
Fluoride	56.8	25.2

(s) Tumbling Wastewater - PSES

Pollutant or pollutant property	Maximum for any one day	Maximum for monthly average
mg/off-kg (lb/million off-lbs) of titanium tumbled		
Cyanide	0.023	0.010
Lead	0.033	0.016
Zinc	0.116	0.048
Ammonia	10.6	4.63
Fluoride	4.70	2.09

(t) Sawing or Grinding Spent Neat Oils - PSES

There shall be no discharge of process wastewater pollutants.

(u) Sawing or Grinding Spent Emulsions - PSES

Pollutant or pollutant property	Maximum for any one day	Maximum for monthly average
mg/off-kg (lb/million off-lbs) of titanium sawed or ground with emulsions		
Cyanide	0.053	0.022
Lead	0.077	0.037
Zinc	0.267	0.112
Ammonia	24.4	10.7
Fluoride	10.9	4.83

(v) Sawing or Grinding Contact Cooling Water - PSES

Pollutant or pollutant property	Maximum for any one day	Maximum for monthly average
mg/off-kg (lb/million off-lbs) of titanium sawed or ground with contact cooling water		
Cyanide	0.138	0.057
Lead	0.200	0.095
Zinc	0.695	0.291
Ammonia	63.5	27.9
Fluoride	28.3	12.6

(w) Dye Pentrant Testing Wastewater - PSES

Pollutant or pollutant property	Maximum for any one day	Maximum for monthly average
mg/off-kg (lb/million off-lbs) of titanium tested using dye penetrant methods		
Cyanide	0.325	0.135
Lead	0.471	0.224
Zinc	1.64	0.683
Ammonia	149	65.7
Fluoride	66.7	29.6

(x) Hydrotesting Wastewater - PSES

There shall be no discharge of process wastewater pollutants.

(y) Miscellaneous Wastewater Sources - PSES

Pollutant or pollutant property	Maximum for any one day	Maximum for monthly average
mg/off-kg (lb/million off-lbs) of titanium formed		
Cyanide	0.010	0.004
Lead	0.014	0.007
Zinc	0.048	0.020
Ammonia	4.32	1.90
Fluoride	1.93	0.856

(z) Degreasing Spent Solvents - PSES

There shall be no discharge of process wastewater pollutants.

(a) Rolling Spent Neat Oils - PSNS

There shall be no discharge of process wastewater pollutants.

(b) Rolling Contact Cooling Water - PSNS

Pollutant or pollutant property	Maximum for any one day	Maximum for monthly average
mg/off-kg (lb/million off-lbs) of titanium rolled with contact cooling water		
Cyanide	0.142	0.059
Lead	0.205	0.098
Zinc	0.713	0.298
Ammonia	65.1	28.6
Fluoride	29.1	12.9

(c) Drawing Spent Neat Oils - PSNS

There shall be no discharge of process wastewater pollutants.

(d) Extrusion Spent Neat Oils - PSNS

There shall be no discharge of process wastewater pollutants.

(e) Extrusion Spent Emulsions - PSNS

Pollutant or pollutant property	Maximum for any one day	Maximum for monthly average
mg/off-kg (lb/million off-lbs) of titanium extruded		
Cyanide	0.021	0.009
Lead	0.030	0.015
Zinc	0.105	0.044
Ammonia	9.59	4.22
Fluoride	4.28	1.90

(f) Extrusion Press Hydraulic Fluid Leakage - PSNS

Pollutant or pollutant property	Maximum for any one day	Maximum for monthly average
mg/off-kg (lb/million off-lbs) of titanium extruded		
Cyanide	0.052	0.022
Lead	0.075	0.036
Zinc	0.260	0.109
Ammonia	23.7	10.5
Fluoride	10.6	4.70

(g) Forging Spent Lubricants - PSNS

There shall be no discharge of process wastewater pollutants.

(h) Forging Contact Cooling Water - PSNS

Pollutant or pollutant property	Maximum for any one day	Maximum for monthly average
mg/off-kg (lb/million off-lbs) of forged titanium cooled with water		
Cyanide	0.029	0.012
Lead	0.042	0.020
Zinc	0.146	0.061
Ammonia	13.3	5.86
Fluoride	5.95	2.64

(i) Forging Equipment Cleaning Wastewater - PSNS

Pollutant or pollutant property	Maximum for any one day	Maximum for monthly average
mg/off-kg (lb/million off-lbs) of titanium forged		
Cyanide	0.012	0.005
Lead	0.017	0.008
Zinc	0.059	0.025
Ammonia	5.33	2.35
Fluoride	2.38	1.06

(j) Forging Press Hydraulic Fluid Leakage - PSNS

Pollutant or pollutant property	Maximum for any one day	Maximum for monthly average
mg/off-kg (lb/million off-lbs) of titanium forged		
Cyanide	0.293	0.121
Lead	0.424	0.202
Zinc	1.48	0.616
Ammonia	135	59.2
Fluoride	60.1	26.7

(k) Tube Reducing Spent Lubricants - PSNS

There shall be no discharge of process wastewater pollutants.

(l) Heat Treatment Contact Cooling Water - PSNS

There shall be no allowance for the discharge of process wastewater pollutants.

(m) Surface Treatment Spent Baths - PSNS

Pollutant or pollutant property	Maximum for any one day	Maximum for monthly average
mg/off-kg (lb/million off-lbs) of titanium surface treated		
Cyanide	0.061	0.025
Lead	0.088	0.042
Zinc	0.304	0.127
Ammonia	27.7	12.2
Fluoride	12.4	5.49

(n) Surface Treatment Rinse - PSNS

Pollutant or pollutant property	Maximum for any one day	Maximum for monthly average
mg/off-kg (lb/million off-lbs) of titanium surface treated		
Cyanide	0.847	0.351
Lead	1.23	0.584
Zinc	4.27	1.78
Ammonia	389.	171.
Fluoride	174.	77.1

(o) Wet Air Pollution Control Scrubber Blowdown - PSNS

Pollutant or pollutant property	Maximum for any one day	Maximum for monthly average
mg/off-kg (lb/million off-lbs) of titanium surface treated or forged		
Cyanide	0.062	0.026
Lead	0.090	0.043
Zinc	0.313	0.131
Ammonia	28.5	12.6
Fluoride	12.8	5.65

(p) Alkaline Cleaning Spent Baths - PSNS

Pollutant or pollutant property	Maximum for any one day	Maximum for monthly average
mg/off-kg (lb/million off-lbs) ot titanium alkaline cleaned		
Cyanide	0.070	0.029
Lead	0.101	0.048
Zinc	0.351	0.147
Ammonia	32.0	14.1
Fluoride	14.3	6.34

(q) Alkaline Cleaning Rinse - PSNS

Pollutant or pollutant property	Maximum for any one day	Maximum for monthly average
mg/off-kg (lb/million off-lbs) of titanium alkaline cleaned		
Cyanide	0.080	0.033
Lead	0.116	0.055
Zinc	0.403	0.169
Ammonia	36.8	16.2
Fluoride	16.4	7.29

(r) Molten Salt Rinse - PSNS

Pollutant or pollutant property	Maximum for any one day	Maximum for monthly average
mg/off-kg (lb/million off-lbs) of titanium treated with molten salt		
Cyanide	0.277	0.115
Lead	0.401	0.191
Zinc	1.40	0.583
Ammonia	128	56.0
Fluoride	56.8	25.2

(s) Tumbling Wastewater - PSNS

Pollutant or pollutant property	Maximum for any one day	Maximum for monthly average
mg/off-kg (lb/million off-lbs) of titanium tumbled		
Cyanide	0.023	0.010
Lead	0.033	0.016
Zinc	0.116	0.048
Ammonia	10.6	4.63
Fluoride	4.70	2.09

(t) Sawing or Grinding Spent Neat Oils - PSNS

There shall be no discharge of process wastewater pollutants.

(u) Sawing or Grinding Spent Emulsions - PSNS

Pollutant or pollutant property	Maximum for any one day	Maximum for monthly average
mg/off-kg (lb/million off-lbs) of titanium sawed or ground with emulsions		
Cyanide	0.053	0.022
Lead	0.077	0.037
Zinc	0.267	0.112
Ammonia	24.4	10.7
Fluoride	10.9	4.83

(v) Sawing or Grinding Contact Cooling Water - PSNS

Pollutant or pollutant property	Maximum for any one day	Maximum for monthly average
mg/off-kg (lb/million off-lbs) of titanium sawed pr ground with contact cooling water		
Cyanide	0.138	0.057
Lead	0.200	0.095
Zinc	0.695	0.291
Ammonia	63.5	27.9
Fluoride	28.3	12.6

(w) Dye Pentrant Testing Wastewater - PSNS

Pollutant or pollutant property	Maximum for any one day	Maximum for monthly average
mg/off-kg (lb/million off-lbs) of titanium treated using dye penetrant methods		
Cyanide	0.325	0.135
Lead	0.471	0.224
Zinc	1.64	0.683
Ammonia	149	65.7
Fluoride	66.7	29.6

(x) Hydrotesting Wastewater - PSNS

There shall be no discharge of process wastewater pollutants.

(y) Miscellaneous Wastewater Sources - PSNS

Pollutant or pollutant property	Maximum for any one day	Maximum for monthly average
mg/off-kg (lb/million off-lbs) of titanium formed		
Cyanide	0.010	0.004
Lead	0.014	0.007
Zinc	0.048	0.020
Ammonia	4.32	1.90
Fluoride	1.93	0.856

(z) Degreasing Spent Solvents - PSNS

There shall be no discharge of process wastewater pollutants.

SUBPART G: PRETREATMENT STANDARDS FOR NEW SOURCES FOR THE URANIUM FORMING SUBCATEGORY

(a) Extrusion Spent Lubricants - PSNS

There shall be no discharge of process wastewater pollutants.

(b) Extrusion Tool Contact Cooling Water - PSNS

Pollutant or pollutant property	Maximum for any one day	Maximum for monthly average
mg/off-kg (lb/million off-lbs) of uranium extruded		
Cadmium	0.007	0.003
Chromium	0.013	0.005
Copper	0.044	0.021
Lead	0.010	0.005
Nickel	0.019	0.013
Fluoride	2.05	0.908
Molybdenum	0.173	0.077

(c) Heat Treatment Contact Cooling Water - PSNS

Pollutant or pollutant property	Maximum for any one day	Maximum for monthly average
mg/off-kg (lb/million off-lbs) of extruded or forged uranium heat treated		
Cadmium	0.006	0.003
Chromium	0.012	0.005
Copper	0.040	0.019
Lead	0.009	0.004
Nickel	0.017	0.012
Fluoride	1.86	0.827
Molybdenum	0.158	0.070

(d) Forging Spent Lubricants - PSNS

There shall be no discharge of process wastewater pollutants.

(e) Surface Treatment Spent Baths - PSNS

Pollutant or pollutant property	Maximum for any one day	Maximum for monthly average
mg/off-kg (lb/million off-lbs) of uranium surface treated		
Cadmium	0.006	0.002
Chromium	0.010	0.004
Copper	0.035	0.017
Lead	0.008	0.004
Nickel	0.015	0.010
Fluoride	1.62	0.718
Molybdenum	0.137	0.061

(f) Surface Treatment Rinse - PSNS

Pollutant or pollutant property	Maximum for any one day	Maximum for monthly average
mg/off-kg (lb/million off-lbs) of uranium surface treated		
Cadmium	0.068	0.027
Chromium	0.125	0.051
Copper	0.432	0.206
Lead	0.095	0.044
Nickel	0.186	0.125
Fluoride	20.1	8.90
Molybdenum	1.70	0.752

(g) Wet Air Pollution Control Scrubber Blowdown - PSNS

Pollutant or pollutant property	Maximum for any one day	Maximum for monthly average
mg/off-kg (lb/million off-lbs) of uranium surface treated		
Cadmium	0.0007	0.0003
Chromium	0.001	0.0005
Copper	0.005	0.002
Lead	0.001	0.0005
Nickel	0.002	0.001
Fluoride	0.208	0.092
Molybdenum	0.018	0.008

(h) Sawing or Grinding Spent Emulsions - PSNS

Pollutant or pollutant property	Maximum for any one day	Maximum for monthly average
mg/off-kg (lb/million off-lbs) of uranium sawer or ground with emulsions		
Cadmium	0.001	0.0005
Chromium	0.002	0.0009
Copper	0.007	0.004
Lead	0.002	0.0008
Nickel	0.003	0.002
Fluoride	0.338	0.150
Molybdenum	0.029	0.013

(i) Sawing or Grinding Contact Cooling Water - PSNS

Pollutant or pollutant property	Maximum for any one day	Maximum for monthly average
mg/off-kg (lb/million off-lbs) of uranium sawed or ground with contact cooling water		
Cadmium	0.033	0.013
Chromium	0.061	0.025
Copper	0.211	0.101
Lead	0.046	0.022
Nickel	0.091	0.061
Fluoride	9.82	4.36
Molybdenum	0.830	0.368

(j) Sawing or Grinding Rinse - PSNS

Pollutant or pollutant property	Maximum for any one day	Maximum for monthly average
mg/off-kg (lb/million off-lbs) of sawed or ground uranium rinsed		
Cadmium	0.001	0.0004
Chromium	0.002	0.0007
Copper	0.006	0.003
Lead	0.002	0.0006
Nickel	0.003	0.002
Fluoride	0.277	0.123
Molybdenum	0.024	0.011

(k) Area Cleaning Rinse - PSNS

Pollutant or pollutant property	Maximum for any one day	Maximum for monthly average
mg/off-kg (lb/million off-lbs) of uranium formed		
Cadmium	0.009	0.004
Chromium	0.016	0.007
Copper	0.055	0.026
Lead	0.012	0.006
Nickel	0.024	0.016
Fluoride	2.56	1.14
Molybdenum	0.216	0.096

(l) Drum Washwater - PSNS

Pollutant or pollutant property	Maximum for any one day	Maximum for monthly average
mg/off-kg (lb/million off-lbs) of uranium formed		
Cadmium	0.009	0.004
Chromium	0.017	0.007
Copper	0.057	0.027
Lead	0.013	0.006
Nickel	0.025	0.017
Fluoride	2.64	1.17
Molybdenum	0.223	0.099

(m) Laundry Washwater - PSNS

Pollutant or pollutant property	Maximum for any one day	Maximum for monthly average
mg/employee - day		
Cadmium	5.24	2.10
Chromium	9.70	3.93
Copper	33.6	16.0
Lead	7.34	3.41
Nickel	14.4	9.70
Fluoride	1,560	692
Molybdenum	132	58.4

(n) Degreasing Spent Solvents - PSNS

There shall be no discharge of process wastewater pollutants.

SUBPART H: PRETREATMENT STANDARDS FOR NEW SOURCES FOR THE ZINC FORMING SUBCATEGORY

(a) Rolling Spent Neat Oils - PSNS

There shall be no discharge of process wastewater pollutants.

(b) Rolling Spent Emulsions - PSNS

Pollutant or pollutant property	Maximum for any one day	Maximum for monthly average
mg/off-kg (lb/million off-lbs) of zinc rolled with emulsions		
Chromium	0.0005	0.0002
Copper	0.002	0.0009
Cyanide	0.0003	0.0001
Zinc	0.002	0.0006

(c) Rolling Contact Cooling Water - PSNS

Pollutant or pollutant property	Maximum for any one day	Maximum for monthly average
mg/off-kg (lb/million off-lbs) of zinc rolled with contact cooling water		
Chromium	0.020	0.008
Copper	0.069	0.033
Cyanide	0.011	0.004
Zinc	0.055	0.023

(d) Drawing Spent Emulsions - PSNS

Pollutant or pollutant property	Maximum for any one day	Maximum for monthly average
mg/off-kg (lb/million off-lbs) of zinc drawn with emulsions		
Chromium	0.002	0.0009
Copper	0.008	0.004
Cyanide	0.001	0.0005
Zinc	0.006	0.003

(e) Direct Chill Casting Contact Cooling Water - PSNS

Pollutant or pollutant property	Maximum for any one day	Maximum for monthly average
mg/off-kg (lb/million off-lbs) of zinc cast by the direct chill method		
Chromium	0.019	0.008
Copper	0.065	0.031
Cyanide	0.010	0.004
Zinc	0.052	0.021

(f) Stationary Casting Contact Cooling Water - PSNS

There shall be no discharge of process wastewater pollutants.

(g) Heat Treatment Contact Cooling Water - PSNS

Pollutant or pollutant property	Maximum for any one day	Maximum for monthly average
mg/off-kg (lb/million off-lbs) of zinc heat treated		
Chromium	0.029	0.012
Copper	0.098	0.047
Cyanide	0.016	0.006
Zinc	0.078	0.032

(h) Surface Treatment Spent Baths - PSNS

Pollutant or pollutant property	Maximum for any one day	Maximum for monthly average
mg/off-kg (lb/million off-lbs) of zinc surface treated		
Chromium	0.033	0.014
Copper	0.114	0.054
Cyanide	0.018	0.007
Zinc	0.091	0.038

(i) Surface Treatment Rinse - PSNS

Pollutant or pollutant property	Maximum for any one day	Maximum for monthly average
mg/off-kg (lb/million off-lbs) of zinc surfact treated		
Chromium	0.133	0.054
Copper	0.459	0.219
Cyanide	0.072	0.029
Zinc	0.365	0.151

(j) Alkaline Cleaning Spent Baths - PSNS

Pollutant or pollutant property	Maximum for any one day	Maximum for monthly average
mg/off-kg (lb/million off-lbs) of zinc alkaline cleaned		
Chromium	0.002	0.0006
Copper	0.005	0.002
Cyanide	0.0007	0.0003
Zinc	0.004	0.002

(k) Alkaline Cleaning Rinse - PSNS

Pollutant or pollutant property	Maximum for any one day	Maximum for monthly average
mg/off-kg (lb/million off-lbs) of zinc alkaline cleaned		
Chromium	0.626	0.254
Copper	2.17	1.03
Cyanide	0.338	0.135
Zinc	1.73	0.710

(l) Sawing or Grinding Spent Emulsions - PSNS

Pollutant or pollutant property	Maximum for any one day	Maximum for monthly average
mg/off-kg (lb/million off-lbs) of zinc sawed or ground with emulsions		
Chromium	0.009	0.004
Copper	0.031	0.015
Cyanide	0.005	0.002
Zinc	0.025	0.010

(m) Electrocoating Rinse - PSNS

Pollutant or pollutant property	Maximum for any one day	Maximum for monthly average
mg/off-kg (lb/million off-lbs) of zinc electrocoated		
Chromium	0.085	0.035
Copper	0.293	0.140
Cyanide	0.046	0.019
Zinc	0.234	0.096

(n) Degreasing Spent Solvents - PSNS

There shall be no discharge of process wastewater pollutants.

SUBPART I: PRETREATMENT STANDARDS FOR EXISTING SOURCES AND PRETREATMENT STANDARDS FOR NEW SOURCES FOR THE ZIRCONIUM-HAFNIUM FORMING SUBCATEGORY

(a) Rolling Spent Neat Oils - PSES

There shall be no discharge of process wastewater pollutants.

(b) Drawing Spent Lubricants - PSES

There shall be no discharge of process wastewater pollutants.

(c) Extrusion Spent Emulsions - PSES

There shall be no discharge of process wastewater pollutants.

(d) Extrusion Press Hydraulic Fluid Leakage - PSES

Pollutant or pollutant property	Maximum for any one day	Maximum for monthly average
mg/off-kg (lb/million off-lbs) of zirconium-hafnium extruded		
Chromium	0.104	0.043
Cyanide	0.069	0.029
Nickel	0.455	0.301
Ammonia	31.6	13.9
Fluoride	14.1	6.26

(e) Swaging Spent Neat Oils - PSES

There shall be no discharge of process wastewater pollutants.

(f) Heat Treatment Contact Cooling Water - PSES

Pollutant or pollutant property	Maximum for any one day	Maximum for monthly average
mg/off-kg (lb/million off-lbs) of zirconium-hafnium heat treated		
Chromium	0.015	0.006
Cyanide	0.010	0.004
Nickel	0.066	0.044
Ammonia	4.57	2.01
Fluoride	2.04	0.906

(g) Tube Reducing Spent Lubricants - PSES

There shall be no discharge of process wastewater pollutants.

(h) Surface Treatment Spent Baths - PSES

Pollutant or pollutant property	Maximum for any one day	Maximum for monthly average
mg/off-kg (lb/million off-lbs) of zirconium-hafnium surface treated		
Chromium	0.150	0.061
Cyanide	0.099	0.041
Nickel	0.653	0.432
Ammonia	45.3	20.0
Fluoride	20.3	8.98

(i) Surface Treatment Rinse - PSES

Pollutant or pollutant property	Maximum for any one day	Maximum for monthly average
mg/off-kg (lb/million off-lbs) of zirconium-hafnium surface treated		
Chromium	0.391	0.160
Cyanide	0.258	0.107
Nickel	1.71	1.13
Ammonia	119	52.1
Fluoride	52.9	23.5

(j) Alkaline Cleaning Spent Baths - PSES

Pollutant or pollutant property	Maximum for any one day	Maximum for monthly average
mg/off-kg (lb/million off-lbs) of zirconium-hafnium alkaline cleaned		
Chromium	0.704	0.288
Cyanide	0.464	0.192
Nickel	3.07	2.03
Ammonia	214	93.8
Fluoride	95.2	42.3

(k) Alkaline Cleaning Rinse - PSES

Pollutant or pollutant property	Maximum for any one day	Maximum for monthly average
mg/off-kg (lb/million off-lbs) of zirconium-hafnium alkaline cleaned		
Chromium	1.38	0.565
Cyanide	0.911	0.377
Nickel	6.03	3.99
Ammonia	419	184
Fluoride	187	82.9

(l) Sawing or Grinding Spent Emulsions - PSES

Pollutant or pollutant property	Maximum for any one day	Maximum for monthly average
mg/off-kg (lb/million off-lbs) of zirconium-hafnium sawed or ground with emulsions		
Chromium	0.124	0.051
Cyanide	0.082	0.034
Nickel	0.540	0.357
Ammonia	37.5	16.50
Fluoride	16.7	7.42

(m) Wet Air Pollution Control Scrubber Blowdown - PSES

There shall be no allowance for the discharge of process wastewater pollutants.

(n) Degreasing Spent Solvents - PSES

There shall be no discharge of process wastewater pollutants.

(o) Degreasing Rinse - PSES

There shall be no discharge of process wastewater pollutants.

(p) Molten Salt Rinse - PSES

Pollutant or pollutant property	Maximum for any one day	Maximum for monthly average
mg/off-kg (lb/million off-lbs) of zirconium-hafnium rinsed following molten salt treatment		
Chromium	0.333	0.136
Cyanide	0.220	0.091
Nickel	1.45	0.960
Ammonia	101	44.3
Fluoride	45.0	20.0

(q) Sawing or Grinding Contact Cooling Water - PSES

Pollutant or pollutant property	Maximum for any one day	Maximum for monthly average
mg/off-kg (lb/million off-lbs) of zirconium-hafnium sawed or ground with contact cooling water		
Chromium	0.142	0.058
Cyanide	0.093	0.039
Nickel	0.617	0.408
Ammonia	42.8	18.8
Fluoride	19.1	8.48

(r) Sawing or Grinding Rinse - PSES

Pollutant or pollutant property	Maximum for any one day	Maximum for monthly average
mg/off-kg (lb/million off-lbs) of sawed or ground zirconium-hafnium rinsed		
Chromium	0.079	0.033
Cyanide	0.052	0.022
Nickel	0.346	0.229
Ammonia	24.0	10.6
Fluoride	10.7	4.75

(s) Sawing or Grinding Spent Neat Oils - PSES

There shall be no discharge of process wastewater pollutants.

(t) Inspection and Testing Wastewater - PSES

Pollutant or pollutant property	Maximum for any one day	Maximum for monthly average
mg/off-kg (lb/million off-lbs) of zirconium-hafnium tested		
Chromium	0.007	0.003
Cyanide	0.005	0.002
Nickel	0.030	0.020
Ammonia	2.06	0.903
Fluoride	0.917	0.407

(a) Rolling Spent Neat Oils - PSNS

There shall be no discharge of process wastewater pollutants.

(b) Drawing Spent Lubricants - PSNS

There shall be no discharge of process wastewater pollutants.

(c) Extrusion Spent Emulsions - PSNS

There shall be no discharge of process wastewater pollutants.

(d) Extrusion Press Hydraulic Fluid Leakage - PSNS

Pollutant or pollutant property	Maximum for any one day	Maximum for monthly average
mg/off-kg (lb/million off-lbs) of zirconium-hafnium extruded		
Chromium	0.104	0.043
Cyanide	0.069	0.029
Nickel	0.455	0.301
Ammonia	31.6	13.9
Fluoride	14.1	6.26

(e) Swaging Spent Neat Oils - PSNS

There shall be no discharge of process wastewater pollutants.

(f) Heat Treatment Contact Cooling Water - PSNS

Pollutant or pollutant property	Maximum for any one day	Maximum for monthly average
mg/off-kg (lb/million off-lbs) of zirconium-hafnium heat treated		
Chromium	0.015	0.006
Cyanide	0.010	0.004
Nickel	0.066	0.044
Ammonia	4.57	2.01
Fluoride	2.04	0.906

(g) Tube Reducing Spent Lubricants - PSNS

There shall be no discharge of process wastewater pollutants.

(h) Surface Treatment Spent Baths - PSNS

Pollutant or pollutant property	Maximum for any one day	Maximum for monthly average
mg/off-kg (lb/million off-lbs) of zirconium-hafnium surface treated		
Chromium	0.150	0.061
Cyanide	0.099	0.041
Nickel	0.653	0.432
Ammonia	45.3	20.0
Fluoride	20.3	8.98

(i) Surface Treatment Rinse - PSNS

Pollutant or pollutant property	Maximum for any one day	Maximum for monthly average
mg/off-kg (lb/million off-lbs) of zirconium-hafnium surface treated		
Chromium	0.391	0.160
Cyanide	0.258	0.107
Nickel	1.71	1.13
Ammonia	119	52.1
Fluoride	52.9	23.5

(j) Alkaline Cleaning Spent Baths - PSNS

Pollutant or pollutant property	Maximum for any one day	Maximum for monthly average
mg/off-kg (lb/million off-lbs) of zirconium-hafnium alkaline cleaned		
Chromium	0.704	0.288
Cyanide	0.464	0.192
Nickel	3.07	2.03
Ammonia	214	93.8
Fluoride	95.2	42.3

(k) Alkaline Cleaning Rinse - PSNS

Pollutant or pollutant property	Maximum for any one day	Maximum for monthly average
mg/off-kg (lb/million off-lbs) of zirconium-hafnium alkaline cleaned		
Chromium	1.38	0.565
Cyanide	0.911	0.377
Nickel	6.03	3.99
Ammonia	419	184
Fluoride	187	82.9

(l) Sawing or Grinding Spent Emulsions - PSNS

Pollutant or pollutant property	Maximum for any one day	Maximum for monthly average
mg/off-kg (lb/million off-lbs) of zirconium-hafnium sawed or ground with emulsions		
Chromium	0.124	0.051
Cyanide	0.082	0.034
Nickel	0.540	0.357
Ammonia	37.5	16.50
Fluoride	16.7	7.42

(m) Wet Air Pollution Control Scrubber Blowdown - PSNS

There shall be no allowance for the discharge of process wastewater pollutants.

(n) Degreasing Spent Solvents - PSNS

There shall be no discharge of process wastewater pollutants.

(o) Degreasing Rinse - PSNS

There shall be no discharge of process wastewater pollutants.

(p) Molten Salt Rinse - PSNS

Pollutant or pollutant property	Maximum for any one day	Maximum for monthly average
mg/off-kg (lb/million off-lbs) of zirconium-hafnium rinsed following molten salt treatment		
Chromium	0.333	0.136
Cyanide	0.220	0.091
Nickel	1.45	0.960
Ammonia	101	44.3
Fluoride	45.0	20.0

(q) Sawing or Grinding Contact Cooling Water - PSNS

Pollutant or pollutant property	Maximum for any one day	Maximum for monthly average
mg/off-kg (lb/million off-lbs) of zirconium-hafnium sawed or ground with contact cooling water		
Chromium	0.142	0.058
Cyanide	0.093	0.039
Nickel	0.617	0.408
Ammonia	42.8	18.8
Fluoride	19.1	8.48

(r) Sawing or Grinding Rinse - PSNS

Pollutant or pollutant property	Maximum for any one day	Maximum for monthly average
mg/off-kg (lb/million off-lbs) of sawed or ground zirconium-hafnium rinsed		
Chromium	0.079	0.033
Cyanide	0.052	0.022
Nickel	0.346	0.229
Ammonia	24.0	10.6
Fluoride	10.7	4.75

(s) Sawing or Grinding Spent Neat Oils - PSNS

There shall be no discharge of process wastewater pollutants.

(t) Inspection and Testing Wastewater - PSNS

Pollutant or pollutant property	Maximum for any one day	Maximum for monthly average
mg/off-kg (lb/million off-lbs) of zirconium-hafnium tested		
Chromium	0.007	0.003
Cyanide	0.005	0.002
Nickel	0.030	0.020
Ammonia	2.06	0.903
Fluoride	0.917	0.407

SUBPART J: PRETRATMENT STANDARDS FOR EXISTING SOURCES AND PRETREATMENT STANDARDS FOR NEW SOURCES FOR THE METAL POWDERS SUBCATEGORY

(a) Metal Powder Production Atomization Wastewater - PSES

Pollutant or pollutant property	Maximum for any one day	Maximum for monthly average
mg/off-kg (lb/million off-lbs) of powder wet atomized		
Copper	9.58	5.040
Cyanide	1.46	0.605
Lead	2.12	1,01

(b) Sizing Spent Neat Oils - PSES

There shall be no discharge of process wastewater pollutants.

(c) Sizing Spent Emulsions - PSES

Pollutant or pollutant property	Maximum for any one day	Maximum for monthly average
mg/off-kg (lb/million off-lbs) of powder sized		
Copper	0.028	0.015
Cyanide	0.004	0.002
Lead	0.006	0.003

(d) Oil-Resin Impregnation Wastewater - PSES

There shall be no discharge of process wastewater pollutants.

(e) Steam Treatment Wet Air Pollution Control Scrubber Blowdown - PSES

Pollutant or pollutant property	Maximum for any one day	Maximum for monthly average
mg/off-kg (lb/million off-lbs) of powder metallurgy parts steam treated		
Copper	1.51	0.792
Cyanide	0.230	0.095
Lead	0.333	0.159

(f) Tumbling, Burnishing and Cleaning Wastewater - PSES

Pollutant or pollutant property	Maximum for any one day	Maximum for monthly average
mg/off-kg (lb/million off-lbs) of powder metallurgy parts tumbled, burnished, or cleaned		
Copper	8.36	4.40
Cyanide	1.28	0.528
Lead	1.85	0.880

(g) Sawing or Grinding Spent Neat Oils - PSES

There shall be no discharge of process wastewater pollutants.

(h) Sawing or Grinding Spent Emulsions - PSES

Pollutant or pollutant property	Maximum for any one day	Maximum for monthly average
mg/off-kg (lb/million off-lbs) of powder metallurgy parts sawed or ground with emulsions		
Copper	0.035	0.018
Cyanide	0.005	0.002
Lead	0.008	0.004

(i) Sawing or Grinding Contact Cooling Water - PSES

Pollutant or pollutant property	Maximum for any one day	Maximum for monthly average
mg/off-kg (lb/million off-lbs) of powder sawed or ground with contact cooling water		
Copper	3.08	1.62
Cyanide	0.470	0.195
Lead	0.681	0.324

(j) Hot Pressing Contact Cooling Water - PSES

Pollutant or pollutant property	Maximum for any one day	Maximum for monthly average
mg/off-kg (lb/million off-lbs) of powder cooled after pressing		
Copper	16.7	8.80
Cyanide	2.55	1.06
Lead	3.70	1.76

(k) Mixing Wet Air Pollution Control Scrubber Blowdown - PSES

Pollutant or pollutant property	Maximum for any one day	Maximum for monthly average
mg/off-kg (lb/million off-lbs) of powder mixed		
Copper	15.0	7.90
Cyanide	2.29	0.948
Lead	3.32	1.58

(l) Degreasing Spent Solvents - PSES

There shall be no discharge of process wastewater pollutants.

(a) Metal Powder Production Atomization Wastewater - PSNS

Pollutant or pollutant property	Maximum for any one day	Maximum for monthly average
mg/off-kg (lb/million off-lbs) of powder wet atomized		
Copper	9.58	5.04
Cyanide	1.46	0.605
Lead	2.12	1.01

(b) Sizing Spent Neat Oils - PSNS

There shall be no discharge of process wastewater pollutants.

(c) Sizing Spent Emulsions - PSNS

Pollutant or pollutant property	Maximum for any one day	Maximum for monthly average
mg/off-kg (lb/million off-lbs) of powder sized		
Copper	0.028	0.015
Cyanide	0.004	0.002
Lead	0.006	0.003

(d) Oil-Resin Impregnation Wastewater - PSNS

There shall be no discharge of process wastewater pollutants.

(e) Steam Treatment Wet Air Pollution Control Scrubber Blowdown - PSNS

Pollutant or pollutant property	Maximum for any one day	Maximum for monthly average
mg/off-kg (lb/million off-lbs) of powder metallurgy parts steam treated		
Copper	0.151	0.079
Cyanide	0.023	0.010
Lead	0.033	0.016

(f) Tumbling, Burnishing and Cleaning Wastewater - PSNS

Pollutant or pollutant property	Maximum for any one day	Maximum for monthly average
mg/off-kg (lb/million off-lbs) of powder metallurgy parts tumbled, burnished, or cleaned		
Copper	0.836	0.440
Cyanide	0.128	0.053
Lead	0.185	0.088

(g) Sawing or Grinding Spent Neat Oils - PSNS

There shall be no discharge of process wastewater pollutants.

(h) Sawing or Grinding Spent Emulsions - PSNS

Pollutant or pollutant property	Maximum for any one day	Maximum for monthly average
mg/off-kg (lb/million off-lbs) of powder metallurgy parts sawed or ground with emulsions		
Copper	0.035	0.018
Cyanide	0.005	0.002
Lead	0.008	0.004

(i) Sawing or Grinding Contact Cooling Water - PSNS

Pollutant or pollutant property	Maximum for any one day	Maximum for monthly average
mg/off-kg (lb/million off-lbs) of powder sawed or ground with contact cooling water		
Copper	3.08	1.620
Cyanide	0.470	0.195
Lead	0.681	0.324

(j) Hot Pressing Contact Cooling Water - PSNS

Pollutant or pollutant property	Maximum for any one day	Maximum for monthly average
mg/off-kg (lb/million off-lbs) of powder cooled after pressing		
Copper	1.67	0.880
Cyanide	0.255	0.106
Lead	0.370	0.176

(k) Mixing Wet Air Pollution Control Scrubber Blowdown - PSNS

Pollutant or pollutant property	Maximum for any one day	Maximum for monthly average
mg/off-kg (lb/million off-lbs) of powder mixed		
Copper	15.0	7.90
Cyanide	2.29	0.948
Lead	3.32	1.58

(l) Degreasing Spent Solvents - PSNS

There shall be no discharge of process wastewater pollutants.

SECTION III

INTRODUCTION

LEGAL AUTHORITY

The Federal Water Pollution Control Act Amendments of 1972 established a comprehensive program to "restore and maintain the chemical, physical, and biological integrity of the Nation's waters," under Section 101(a). By July 1, 1977, existing industrial dischargers were required to achieve "effluent limitations requiring the application of the best practicable control technology currently available" (BPT), under Section 301(b)(1)(A); and by July 1, 1983, these dischargers were required to achieve "effluent limitations requiring the application of the best available technology economically achievable . . . which will result in reasonable further progress toward the national goal of eliminating the discharge of all pollutants" (BAT), under Section 301(b)(2)(A). New industrial direct dischargers were required to comply with Section 306 new source performance standards (NSPS), based on best available demonstrated technology; existing and new dischargers to publicly owned treatment works (POTW) were subject to pretreatment standards under Sections 307(b) (PSES) and (c) (PSNS), respectively, of the Act. While the requirements for direct dischargers were to be incorporated into National Pollutant Discharge Elimination System (NPDES) permits issued under Section 402 of the Act, pretreatment standards were made enforceable directly against discharges to a POTW (indirect dischargers).

Although Section 402(a)(1) of the 1972 Act authorized the setting of NPDES permit requirements for direct dischargers on a case-by-case basis, Congress intended that, for the most part, control requirements would be based on regulations promulgated by the Administrator of EPA. Section 304(b) of the Act required the Administrator to promulgate regulations providing guidelines for effluent limitations setting forth the degree of effluent reduction attainable through the application of BPT and BAT. Moreover, Sections 304(c) and 306 of the Act required promulgation of regulations for new sources (NSPS); and Sections 304(f), 307(b), and 307(c) required promulgation of regulations for pretreatment standards. In addition to these regulations for designated industry categories, Section 307(a) of the Act required the Administrator to promulgate effluent standards applicable to all dischargers of toxic pollutants. Finally, Section 301(a) of the Act authorized the Administrator to prescribe any additional regulations "necessary to carry out his functions" under the Act.

EPA was unable to promulgate many of these regulations by the dates contained in the Act. In 1976, EPA was sued by several environmental groups and in settlement of this lawsuit, EPA and the plaintiffs executed a "Settlement Agreement," which was approved by the Court. This Agreement required EPA to develop a

program and adhere to a schedule for promulgating 21 major industries' BAT effluent limitations guidelines, pretreatment standards, and new source performance standards for 65 "priority" pollutants and classes of pollutants. See Settlement Agreement in Natural Resources Defense Council, Inc. v. Train, 8 ERC 2120 (D.D.C. 1976), modified 12 ERC 1833 (D.D.C. 1979), and modified by October 26, 1982, August 2, 1983, and January 6, 1984.

On December 27, 1977, the President signed into law amendments to the Federal Water Pollution Control Act (P.L. 95-217). The Act, as amended, is commonly referred to as the Clean Water Act. Although this Act makes several important changes in the federal water pollution control program, its most significant feature is its incorporation of several of the basic elements of the Settlement Agreement program for toxic pollution control. Sections 301(b)(2)(A) and 301(b)(2)(C) of the Act now require the achievement, by July 1, 1984, of effluent limitations requiring application of BAT for toxic pollutants, including the 65 priority pollutants and classes of pollutants (the same priority pollutants as listed in Natural Resources Defense Council v. Train), which Congress declared toxic under Section 307(a) of the Act. Likewise, EPA's programs for new source performance standards and pretreatment standards are now aimed principally at control of these toxic pollutants. Moreover, to strengthen the toxics control program, Congress added Section 304(e) to the Act, authorizing the Administrator to prescribe "best management practices" (BMPs) to prevent the release of toxic and hazardous pollutants from plant site runoff, spillage or leaks, sludge or waste disposal, and drainage from raw material storage associated with, or ancillary to, the manufacturing or treatment process.

The 1977 Amendments added Section 301(b)(2)(E) to the Act establishing "best conventional pollutant control technology" (BCT) for discharges of conventional pollutants from existing industrial point sources. Conventional pollutants are those mentioned specifically in Section 304(a)(4) (biochemical oxygen demanding pollutants (BOD5), total suspended solids (TSS), fecal coliform, and pH), and any additional pollutants defined by the Administrator as "conventional." (To date, the Agency has added one such pollutant, oil and grease, 44 FR 44501, July 30, 1979.)

DATA COLLECTION AND UTILIZATION

EPA gathered and evaluated technical data in the course of developing these guidelines in order to perform the following tasks:

1. To profile the category with regard to the production, manufacturing processes, geographical distribution, potential wastewater streams, and discharge mode of nonferrous metals forming plants.

2. To subcategorize, if necessary, in order to permit regulation of the nonferrous metals forming category in an equitable and manageable way. This was done by

taking all of the factors mentioned above plus others into account.

3. To characterize wastewater, detailing water use, wastewater discharge, and the occurrence of toxic, conventional, and nonconventional pollutants, in waste streams from nonferrous metals forming processes.

4. To select pollutant parameters--those toxic, conventional, and nonconventional pollutants present at significant concentrations in wastewater streams--that should be considered for regulation.

5. To consider control and treatment technologies and select alternative methods for reducing pollutant discharges in this category.

6. To consider the costs of implementing the alternative control and treatment technologies.

7. To present possible regulatory alternatives.

Sources of Industry Data

Prior to proposal, data on the nonferrous metals forming category were gathered from previous EPA studies, literature studies, federal and state environmental agencies, raw material manufacturers and suppliers, trade association contacts, wastewater treatment equipment manufacturers, and the nonferrous metals forming companies themselves. All known nonferrous metals forming companies were sent a data collection portfolio (dcp) requesting specific information concerning each facility. Finally, a sampling program was carried out at 17 plants. The sampling program consisted of screen sampling, performed under authority provided by Section 308 of the Clean Water Act, and analysis to determine the presence of a broad range of pollutants and quantification of the pollutants present in nonferrous metals forming wastewater. Specific details of the sampling program and information from the above data sources are presented in Section V.

A large number of public comments were received on the regulation, after its proposal on March 5, 1984. Many of the comments contained additional data about the category. Also, after proposal, the Agency visited and sampled nine additional nonferrous forming plants to characterize raw wastewater and treatment effectiveness. Dcps were received from 41 additional plants that had not responded before proposal or that were identified after proposal. In addition, 29 plants which submitted dcps before proposal were recontacted to clarify information supplied in the dcps. On February 4, 1985, a notice was published in the Federal Register (50 FR 4872) announcing the availability of additional data for review and comment. After publication of the notice of availability, EPA received a number of public comments and information from two plants identified after publication of the

notice. The Agency requested data to support comments on the proposed regulation and notice of availability from 10 companies. In addition, 49 plants were requested to submit analytical data on specific raw waste streams. All additional information obtained since proposal which arrived in a timely manner and all comments on the proposed regulation were considered in preparing the final regulation.

Data collection efforts prior to proposal are discussed in detail below. Following these discussions, data collection since proposal is described.

Literature Review. EPA reviewed and evaluated existing literature for background information to clarify and define various aspects of the nonferrous metals forming category and to determine general characteristics and trends in production processes and wastewater treatment technology. Review of current literature continued throughout the development of these guidelines.

Existing Data Review. Information related to nonferrous metals forming processes, wastewater, and wastewater treatment technology was compiled from a number of sources. Technical data gathered for development of guidelines for related categories, such as the aluminum forming, copper forming, metal finishing, nonferrous metals manufacturing, electroplating, and battery manufacturing categories, were reviewed and incorporated into this guideline, where applicable.

Frequent contact has been maintained with industry personnel. Contributions from these sources were particularly useful for clarifying differences in production processes.

Plant Survey and Evaluation. The nonferrous metals forming plants were surveyed to gather information regarding plant size, age and production, the production processes used, and the quantity, treatment, and disposal of wastewater generated at these plants.

A listing of plants believed to be in the nonferrous metals forming category was compiled from a Dun and Bradstreet computer listing, publications and telephone contacts with various trade associations believed to represent parts of the industry, the Thomas Register, and telephone contacts with commodity specialists at the Bureau of Mines. These sources resulted in the identification of approximately 1,000 plants as being possibly engaged in nonferrous metals forming activities. The SIC codes used were: (1) 3356: Rolling, Drawing, Extruding of Nonferrous Metals; (2) 3357: Drawing and Insulating Nonferrous Wire; (3) 3463: Nonferrous Forgings; and (4) 3497: Metal, Foil, and Leaf.

A comprehensive telephone survey was undertaken in order to determine which plants should comprise a final mailing list, i.e., whether or not nonferrous metals forming operations were present at each of the plants on the original list. During the telephone survey, questions were asked concerning what metals are

formed at a particular plant, the type of forming operations utilized on the metal, i.e., rolling, drawing, extruding, forging, casting, cladding, or powder metallurgy and their associated water usage, discharge, and treatment-in-place. Respondents also were asked what surface treatment, cleaning, washing, and rinsing operations are utilized and their associated water usage, discharge, and treatment-in-place. At the conclusion of the telephone survey, many of the plants on the original list were determined not to be within the scope of the nonferrous metals forming category.

A list of those plants believed to be a part of the category was then compiled in preparation for dcp distribution. The results of the telephone survey are documented in the administrative record for this rulemaking.

The Agency mailed 377 data collection portfolios to companies believed to be in the nonferrous metals forming category. These 377 dcps were sent out under the authority of Section 308 of the Clean Water Act to companies on the mailing list. The dcps were sent to the corporate office of each company and addressed to the highest ranking corporate official which could be identified. The dcp instructions clearly stated that the portfolio was to be completed for each facility operated by that company which had operations which are defined in the instructions to be nonferrous metals forming.

Approximately 95 percent of the companies responded to the survey. In many cases, companies contacted did not conduct operations covered by the nonferrous metals forming category as it is defined by the Agency. Where firms had nonferrous metals forming operations at more than one location, a dcp was returned for each plant. A total of 294 dcps applicable to the nonferrous metals forming category were returned. In cases where the dcp responses were incomplete or unclear, additional information was requested by telephone or letter.

The dcp responses were interpreted individually, and the following data were recorded for future reference and evaluation:

- Company name, plant address, and name of the contact listed in the dcp.
- Metal types formed at the plant.
- Plant discharge status as direct (to surface water), indirect (to POTW), or zero discharge by metal type.
- Production process streams present at the plant, as well as associated flow rates; production rates; operating hours; wastewater treatment, reuse, or disposal methods; and the quantity and nature of process chemicals used.
- Plant age and number of employees.

- Availability of pollutant monitoring data provided by the plant.

The summary listing of this information provided a consistent, systematic method of evaluating and summarizing the dcp responses. In addition, procedures were developed to simplify subsequent analyses. The procedures developed had the following capabilities:

- Selection and listing of plants containing specific production process streams or treatment technologies.

- Summation of the number of plants containing specific process streams and treatment combinations.

- Calculation of the percent recycle present for specific streams and summation of the number of plants recycling this stream within various percent recycle ranges.

- Calculation of annual production values associated with each process stream and summation of the number of plants with these process streams having production values within various ranges.

- Calculation of water use and blowdown from individual process streams.

The calculated information and summaries were important and frequently used in the development of this guideline. Summaries were used in the category profile, evaluation of subcategorization, and analysis of in-place treatment and control technologies. Calculated information was used in the determination of water use and discharge values for the conversion of pollutant concentrations to mass loadings.

After proposal, additional data were provided in dcps received from 41 plants that had not responded before proposal or that were identified after proposal. Twenty-nine plants which submitted dcps before proposal were recontacted to clarify information supplied in the dcps. Two plants were identified after publication of the notice of availability. Process and wastewater treatment data for these two plants were obtained by telephone conversations and follow-up letters.

Discharge Monitoring Reports. To supplement existing data regarding treatment-in-place and the long-term performance of that treatment, the Agency collected discharge monitoring report (DMR) data from state and EPA Regional offices for direct dischargers. DMR data are self-monitoring data supplied by permit holders to meet state or EPA permit requirements. These data were available from 17 nonferrous metals forming plants; however, the data vary widely in character and nature due to the dissimilar nature of the monitoring and reporting requirements placed on nonferrous metals forming plants by the NPDES permit issuing authority. DMR data from plants with lime and settle treatment

were used as a check on the achievability of the treatment effectiveness values used to establish the limitations and standards.

Engineering Site Visits and Sampling Trips. In addition to the above data sources, prior to proposal, EPA sampled 17 nonferrous metals forming plants. After proposal EPA visited and sampled nine nonferrous forming plants. Plant visits were made to sample treated and untreated wastewater and to gather additional information on manufacturing processes, wastewater flows, and wastewater treatment technologies and associated costs. Samples were collected at these 17 plants in order to characterize the wastewaters from the various nonferrous metals forming manufacturing operations and to characterize the performance of existing treatment systems. The 17 plants selected for sampling practice some combination of hot rolling, cold rolling, drawing, extrusion, forging, tube reducing, cladding, metal powder production and powder metallurgy, as well as the associated operations of casting, heat treatment, surface treatment, alkaline cleaning, sawing, grinding, tumbling, burnishing, and product testing. These plants were chosen for sampling because the flow rates and pollutant concentrations in the wastewaters discharged from their manufacturing operations are representative of the flow rates and pollutant concentrations of wastewaters generated by similar operations at other plants in the nonferrous metals forming industry.

In addition, EPA requested that 49 plants submit analytical data on specific raw waste streams. Twenty-four plants provided these data and 19 plants provided samples which were subsequently analyzed by EPA's contract laboratory. Three plants responded that they were no longer forming the metal for which information was requested, or their production schedule did not include this metal within the timeframe of the request. Three plants reported that they did not actually generate the waste stream for which information was requested. In all, the Agency received analytical data for 51 waste streams for which wastewater characteristic data were not previously available.

Utilization of Industry Data

Data from the previously listed sources were used to develop BPT and BAT limitations and NSPS and pretreatment standards as described in this document. Subcategorization of the nonferrous metals forming category, described in Section IV, was based on information obtained from previous EPA studies, the technical literature and our own sampling data. Sampling results were used to determine raw wastewater characteristics, presented in Section V, and to select pollutant parameters for control, as described in Section VI. After determining the pollutants requiring control and the concentrations at which they are commonly found, applicable treatment technologies were identified. The applicability of wastewater treatment technologies currently in use at nonferrous metals forming plants (reported in dcps and observed at sampled plants) was especially considered. These technologies are described in Section VII. Section VIII describes the method

used to estimate the cost of various treatment technology options. The cost estimates were based on data from the technical literature and from equipment manufacturers. Finally, data from dcps and sampling, along with estimated treatment system performance, were used to develop the limitations and standards described in Sections IX, X, XI, XII, and XIII of this document. The data were used first to select treatment technologies applicable to the category and then to calculate achievable effluent pollutant concentrations for each subcategory.

DESCRIPTION OF THE NONFERROUS METALS FORMING CATEGORY

The nonferrous metals forming category is generally included within SIC 3356, 3357, 3463, and 3497 of the Standard Industrial Classification Manual, prepared in 1972 by the Office of Management and Budget, Executive Office of the President. These SIC codes are: (1) 3356: Rolling, Drawing, Extruding of Nonferrous Metals; (2) 3357: Drawing and Insulating Nonferrous Wire; (3) 3463: Nonferrous Forgings; and (4) 3497: Metal, Foil, and Leaf. The category includes establishments engaged in the forming of nonferrous metals and their alloys, except for copper and aluminum for which separate regulations have been promulgated [40 CFR Part 468 (48 FR 36942, August 15, 1983), 40 CFR Part 467 (48 FR 49126, October 24, 1983)] and beryllium. Beryllium alloy forming was included in the nonferrous metals forming category when the regulation was proposed, but was not included in the final regulation.

Casting of nonferrous metals is included in this category when it is performed as an integral part of the nonferrous metals forming process. Casting of parts is included in the metal molding and casting category [40 CFR Part 464 (proposed at 47 FR 51512 on November 15, 1982)]. Casting which is an integral part of a nonferrous metals smelting and refining operation is included in the nonferrous metals manufacturing category [40 CFR Part 421 (nonferrous metals manufacturing phase I, promulgated at 49 FR 8742 on March 8, 1984; nonferrous metals manufacturing phase II, proposed at 49 FR 26352 on June 27, 1984)].

For the purpose of this regulation, nonferrous metal has been defined as any pure metal other than iron, copper, or aluminum; or metal alloy for which a metal other than iron, copper, or aluminum is its major constituent by weight. Alloys are considered as only one metal type. The metal type of any particular alloy is defined to be the metal that is the major component in percent by weight. Thus, an alloy which is 53 percent lead and 47 percent zinc is considered as lead, and an alloy which is 40 percent nickel, 35 percent zinc, and 25 percent tin is considered as nickel. Forming of an alloy which is greater than 50 percent iron, copper, or aluminum is not included in the category. The above definition is applicable for all metals except beryllium and precious metals alloys. Beryllium alloys are defined as any nonferrous metal alloy in which beryllium is present at 0.1 or greater percent by weight.

Alloys are considered precious metal alloys when the precious metal is present at 30 or greater percent by weight. Any alloy of a precious metal and another nonferrous metal, where the precious metal is present at 30 or greater percent by weight, is included in the precious metals subcategory.

Use of the term "metal" throughout this document is not meant to imply pure metals only. "Metal" means any substance having metallic properties, including alloys composed of two or more chemical elements, of which at least one is an elemental metal. Thus "copper" means copper and its alloys (brass, bronze, nickel silver, beryllium copper, etc.); "iron" means iron and its alloys (including steel, an alloy of iron and carbon), and so forth.

Forming is the deformation of a metal into specific shapes by hot or cold working. The major forming operations include rolling (both hot and cold), extruding, forging, and drawing. Minor forming operations included in the category are cladding, tube reducing, swaging, and metal powder production. Ancillary operations performed as an integral part of the forming process are also included in the category. These operations include casting for subsequent forming, heat treatment, surface treatment, surface coating, alkaline cleaning, solvent degreasing, product testing, and wet air pollution controls on forming operations and the associated operations. Iron, copper, and aluminum powder manufacturing and forming of parts from metal powders as well as any associated ancillary operations (listed above), are covered under the nonferrous metals forming category, although the other forming operations for these metals are covered under separate regulations (Iron and Steel, 40 CFR Part 420; Copper Forming, 40 CFR Part 468; 1983; and Aluminum Forming, 40 CFR Part 467). Metal powder production processes included in this category include metal powder production such as milling, abrading or atomizing. This category does not include the production of metal powders by chemical means such as precipitation. The production of metal powders by chemical means may be regulated under the inorganic chemicals manufacturing regulation, 40 CFR Part 415. The production of metal powder as the final step in refining metal is regulated under the nonferrous metals manufacturing regulation, 40 CFR Part 421.

Casting of nonferrous metals is considered a nonferrous metals forming operation when performed as an integral part of the nonferrous metals forming process and located at the same plant site at which nonferrous metals are formed. This includes shot-casting and casting of billets, ingots, bars, and strip which are subsequently formed on-site. Casting of lead which is subsequently rolled and fabricated into battery cases is regulated under this category and under battery manufacturing 40 CFR Part 461. However, the limitations for this casting operation are the same in each category.

Surface treatment of nonferrous metal includes any chemical or electrochemical treatment applied to the surface of the metal. Surface treatment of nonferrous metals is considered to be an

integral part of nonferrous metals forming whenever it is performed at the same plant site at which nonferrous metals are formed. Wastewater discharges covered by the nonferrous metals forming point source category, as delineated above, are not subject to regulation under 40 CFR Part 413 (electroplating) or 40 CFR Part 433 (metal finishing).

Historical

The nonferrous metals forming category covers forming operations performed on 30 metals. Nine of these metals have been excluded from this regulation. These metal types are listed in Table III-1. They are excluded from regulation because, according to information reported in dcps, they are not formed on a production scale in the United States or because the forming operations performed on them do not discharge wastewater. As previously discussed, the forming of beryllium alloys will be covered under another regulation. The 21 nonferrous metal types that are covered under this regulation are listed in Table III-2.

Employment data are given in the dcp responses for 280 plants (84 percent of the plants known to be engaged in nonferrous metals forming). These plants report a total of 39,000 workers in nonferrous metals forming. At an average plant 117 employees are engaged in nonferrous metals forming. The employment distribution of nonferrous metals forming workers at 280 plants is: 31 percent employ fewer than 25 people in nonferrous metals forming operations; 71 percent employ fewer than 100 people in this capacity; and 96 percent employ fewer than 500 people.

Nonferrous metals forming plants are not limited to any one geographical location. As shown in Figure III-1, plants are found throughout most of the United States, but the majority are located east of the Mississippi River. Population density is not a limiting factor in plant location. Nonferrous metals forming plants tend to be more common in urban areas, but they are frequently found in rural areas as well.

The majority of the nonferrous metals forming plants (72 percent) that reported the age of their facility indicated they were built since 1954. Table III-3 shows the age distribution of nonferrous metals forming plants according to their classification as direct, indirect, and zero discharge type.

Product Description

Nonferrous metals are formed by a variety of operations, described in the second half of this section. The product of one operation is often the starting material for a subsequent operation, as shown in Figure III-2. Cast ingots and billets are the starting point for making sheet and plate, extrusions, and forgings, as well as rod, for use in drawing operations. Rolled sheet and plate can be used as stock for stampings, can blanks, and roll formed products; as finished products in building, and aircraft construction; or as foil. Extrusions can be used as raw

stock for forging and drawing; or can be sold as final products, such as beams or extruded tubing. Forgings are either sold as consumer products or used as parts in the production of machinery, aircraft, and engines.

Products manufactured by nonferrous metals forming operations generally serve as stock for subsequent fabricating operations. Because the 21 metals included in this category have a wide range of physical, chemical, and electrochemical properties, they are used in a wide range of fabricated products. The forming and associated operations in common use for a particular metal depend on what is possible, given the physical properties of the metal, and what is required for a specific application. For example:

- Bismuth has a low melting point and thus is rolled into strip for use in fuses. When alloyed with lead, tin, or cadmium, it is also extruded and drawn into solder wire.

- Cobalt is often alloyed with nickel, and is formed by the same method used to form steels. It is used for applications requiring strength and corrosion resistance at high temperatures, such as turbine blades.

- Hafnium is formed into control rods for nuclear reactors because of its special properties.

- Lead is extruded and swaged into bullets because it is dense and inexpensive. When alloyed with tin, bismuth, and cadmium, it is extruded into solder, an application which makes use of its low melting point. Lead is formed into cases for automobile batteries because of its electrochemical properties and because it is inexpensive.

- Magnesium is extruded into cases for batteries used in portable communications equipment. The application takes advantage of the metal's electrochemical properties and light weight.

- Nickel is often alloyed with chrome and iron to make stainless steel alloys, many greater than 50 percent nickel. It is formed by all major forming operations and is used in applications requiring high strength and corrosion resistance at high temperatures, such as tubing for steam and gas turbines and in jet engines.

- Precious metals (silver, gold, platinum, and palladium) are corrosion-resistant and good electrical conductors. Because of their expense, they are often used as a thin layer clad to a layer of base metal (usually copper or nickel) which is rolled into strip and stamped into electrical contacts. Pure and clad precious metals are also drawn to wire used to fabricate jewelry. The corrosion resistance of precious metals makes them useful in dentistry.

- Refractory metals (columbium, molybdenum, rhenium, tantalum, tungsten, and vanadium) must be formed at high temperatures (relative to other metals) or as powders because they have melting points above 1,960C. Their unique properties make them useful for specialized applications. Columbium is used as a structural material in nuclear reactors. Molybdenum is drawn into semiconductor wires. Although rhenium can be cold worked there are no common uses and very little production of formed rhenium. Tantalum is used in very small capacitors and heat transfer and furnace equipment. Tungsten finds wide application as filaments for electric light bulbs. As tungsten carbide it is used in cutting tools and abrasives because of its extreme hardness.

- Tin is used in solder, usually alloyed with lead.

- Titanium, used in aerospace applications because of its high strength and light weight, is formed by all major forming techniques. It is also used for corrosion-resistant hardware and surgical implants.

- Uranium, when composed of 0.2 to 0.3 percent 235U (the fissionable isotope), remainder 238U, is called depleted uranium. This material is extruded into armor piercing projectiles because it is extremely dense.

- Zinc is light-weight and corrosion-resistant. It is rolled into sheet for architectural uses and stamped into penny blanks. Its chemical properties make it useful for battery cases and lithographic plates.

- Zirconium is used to clad nuclear fuel rods in water cooled reactors and as a construction material in chemical plants because of its high melting point and corrosion resistance. It is extruded into tubes and rolled into plate and sheet.

Some forming operations are more commonly used on some metals than others. For instance, 72 percent of plants which form lead, tin, or bismuth extrude these metals, but only 8.3 percent of lead forming plants forge (swage) the metal. Casting is not common at refractory metals plants (26 percent of the plants) but powder metallurgy is (79 percent of the plants). Precious metals are commonly rolled (67 percent) and drawn (53 percent), but less commonly extruded (16 percent).

Production of formed nonferrous metal products is tabulated in Table III-4. Production varies widely, from as little as two and a half million pounds of cobalt to 391 million pounds of lead products formed in 1981. Approximately 234 million pounds of iron, steel, copper, and aluminum powders and parts made from powder were produced in 1981. Reported production of formed nonferrous metals at individual plant sites ranged from 12 kg (27

pounds) to almost 23 million kg (51 million pounds) during 1981.

Wastewater Generation and Treatment

One hundred seventy-six plants indicated that no wastewater from nonferrous metals forming operations is discharged to either surface waters or a POTW. Of the remaining 158 plants, 37 discharge an effluent from nonferrous metals forming directly to surface waters, while 121 discharge indirectly, sending nonferrous metals forming effluent through a POTW. The volume of nonferrous metals forming wastewater discharged by plants in this category ranges from 0 to 893 million liters per year (0 to 236 million gallons per year). The mean volume is approximately 28.1 million liters per year (7.42 million gallons per year) for those plants having discharges. Only 102 of the discharging plants provided enough information to calculate the volume of wastewater discharged. Of these 102 plants, 18 percent discharge less than 38,000 liters per year (10,000 gallons per year); 36 percent discharge less than 380,000 liters per year (100,000 gallons per year); 70 percent discharge less than 3,800,000 liters per year (1,000,000 gallons per year); and 90 percent discharge less than 38,000,000 liters per year (10,00,000 gallons per year). There is no correlation between overall water use and total nonferrous metals production for a plant as a whole. However, correlations can be developed between water use or wastewater discharge and production on a process basis, as discussed in Section V.

Approximately 44 percent of the plants reported some form of treatment of wastewater from nonferrous metals forming processes. The most common forms of wastewater treatment are pH adjustment, clarification, and gravity oil separation (skimming). Recirculation, including in-line filtration and cooling towers, is frequently used to control the volume of wastewater generated. Other flow reduction techniques demonstrated include countercurrent cascade and spray rinsing. Oily wastes are separated into oil and water fractions by emulsion breaking using heat or chemicals. Gravity separation is frequently used to separate neat oil and broken emulsions from the water fraction. The oil portion is usually removed by a contractor, although some plants dispose of it by land application or incineration. Wastewater treatment sludges generally are not thickened, but are disposed of without treatment; however, vacuum and pressure filters, centrifuges, and drying beds are occasionally used. Sludge disposal methods include landfill and contractor removal. Disposal of wastewater is being accomplished by discharge to surface waters or a POTW, by contractor removal, or by land application (lagoons and septic tanks).

DESCRIPTION OF NONFERROUS METALS FORMING PROCESSES

In the remainder of this section, nonferrous metal forming operations and operations associated with nonferrous metal forming are described in detail. In these descriptions, particular emphasis is placed on the use of water and generation of wastewater. The major nonferrous metals forming operations covered under this

guideline include:

1. Rolling, drawing, extruding and forging of nonferrous metals other than copper, aluminum, and beryllium;

2. Cladding of any metals other than iron, copper, aluminum, and beryllium to any base metal (including iron, steel, copper, aluminum, and beryllium);

3. Production of powders of all metals except beryllium (including iron, copper, and aluminum) by mechanical methods or atomization; and

4. Manufacture of parts from powders of all metals except beryllium (including iron, copper, and aluminum).

Nonferrous metal forming operations which are associated with the above operations are also included in this category. These include:

1. Casting of nonferrous metals for subsequent forming;

2. Heat treatment;

3. Chemical surface treatments (acid, caustic, chromate, molten salt, electrocoating);

4. Chemical cleaning (alkaline);

5. Degreasing;

6. Mechanical surface treatments (machining, grinding, polishing, tumbling, burnishing);

7. Sawing;

8. Product testing; and

9. Other operations generating wastewater.

Water is used in forming of nonferrous metals to achieve desired metal characteristics such as tensile strength, malleability, hardness, and specific surface characteristics. Water can be used without additives, as in contact cooling and rinsing; in combination with soaps and oils, as in lubricating various operations; and in combination with other chemicals, as in surface treatment and cleaning operations. Water is used in vapor form to steam clean and surface treat some metals and as a high pressure jet in the production of metal powders by atomization. In addition to its use in applications which directly affect metal properties, water is used in cleaning nonferrous metal forming plants and equipment and in devices used to control air pollution generated during forming. A tally of wastewater sources in the nonferrous metals forming industry is presented in Section V. Regulatory flow allowances for waste streams under BPT, BAT,

NSPS, and pretreatment standards are presented and discussed in Sections IX, X, XI, XII, and XIII, respectively.

EPA recognizes that plants sometimes combine wastewater from nonferrous metals forming and other processes and nonprocess wastewater prior to treatment and discharge. Pollutant discharge allowances will be established by this guideline only for nonferrous metals forming process wastewater. The flows and wastewater characteristics for other waste streams are a function of the plant operations, layout, and water handling practices. As a result, the pollutant discharge effluent limitation for wastewater streams other than nonferrous metals forming process water will be prepared by the permitting authority on a case-by-case basis, applying other effluent limitations and guidelines, if appropriate. These wastewaters are not further discussed in this document.

Nonferrous Metals Forming Operations

Rolling. Rolling is the process of reducing the cross-sectional area of metal stock, or otherwise shaping metal products, through the application of pressure by rotating rolls. Cylindrical rolls are used to produce flat shapes; grooved rolls produce rounds, squares, and structural shapes. Two common roll configurations are shown in Figure III-3. Because multiple passes through the rolls are often required to reduce the metal to the desired thickness, mills are frequently designed to allow rolling in the reverse direction.

Rolling employs either hot- or cold-working techniques depending on the kind of metal or alloy, and the properties desired in the final product. Hot rolling is defined as rolling above the recrystallization temperature of the metal and is typically the first step in a series of operations to produce a rolled product. Cast ingots or billets are usually reduced by hot rolling to elongated forms, known as blooms or slabs. The rolling mills used for this operation are generally referred to as "breakdown mills" or "roughing mills." Additional hot or cold rolling can then follow the "breakdown" process. A diagram of a reversing hot strip mill which would be used subsequent to a "breakdown" operation is presented in Figure III-4.

Cold rolling is defined as rolling below the recrystallization temperature of the metal and may be carried out at temperatures much higher than ambient and still be considered "cold" rolling. A diagram of a typical 4-high cold rolling mill is presented in Figure III-5.

The rolling process is used to produce any one of a number of intermediate or final products from cast metal. Rolling is used to make flat products such as plate, sheet, strip, and foil. Plate is defined as being greater than or equal to 6.3 mm (0.25 inch) thick, and is usually produced from ingots by hot rolling. Cold rolled flat products are generally classified as sheet [from

6.3 to 0.15 mm (0.249 to 0.007 inch) thick] and foil [below 0.15 mm (0.006 inch) thick].

Rod, bar, and wire may be produced by either hot or cold rolling using grooved rolls. Rod is defined as having a solid round cross section 0.95 cm (3/8 inch) or more in diameter. Bar is also identified by a cross section with 0.95 cm (3/8 inch) or more between two parallel sides, but it is not round. Wire is characterized by a diameter of less than 0.95 cm (3/8 inch).

A specialized cold rolling operation, called tube reducing, is used to reduce the diameter and wall thickness of tubing. A mandrel is inserted in the tubing which is then rolled between a pair of rolls with tapered grooves. This process is used on nickel, silver, gold, zirconium, and titanium tubing.

As will be discussed later in this section, heat treatment is usually required before and between stages of the rolling process. Ingots are usually made homogeneous in grain structure prior to hot rolling in order to remove the effects of casting on the metal's mechanical properties. Annealing is typically required between passes or after cold rolling to keep the metal ductile and remove the effects of work hardening. The kind and degree of heat treatment applied depends on the metal and alloy involved, the nature of the rolling operation, and the properties desired in the product.

It is necessary to use a cooling and lubricating compound during rolling to prevent excessive wear on the rolls, to prevent adhesion of metal to the rolls, and to maintain a suitable and uniform rolling temperature. Water and oil-in-water emulsions, stabilized with emulsifying agents such as soaps and other polar organic materials, are used for this purpose in hot rolling operations. Emulsion concentrations usually vary between 5 and 10 percent oil. Evaporation of the lubricant as it is sprayed on the hot metal serves to cool the rolling process. Mist eliminators may be used to recover rolling emulsions that are dispersed to the atmosphere. The emulsions are typically filtered to remove metal fines and other contaminants and recirculated through the mills

Water without additives is also used as a coolant and lubricant in hot rolling operations. The water is typically not recycled, but used once and discharged. Oil-in-water emulsions, described above, and mineral oil or kerosene-based lubricants are used in cold rolling operations. Emulsions are used to roll lead, nickel, magnesium, precious metals, refractory metals, and zinc. Neat oils are used to roll nickel, zinc, and refractory metals. Kerosene-based lubricants are used to roll precious metals. Graphite based lubricants are sometimes used to roll refractory metals. Often a light (low viscosity) oil or emulsion is used to lubricate the outside of a tube during tube reducing, while the inside is lubricated with a heavier (higher viscosity) oil or grease. These lubricants eventually become rancid or degraded and are eliminated by continuous bleed or periodic discharge.

Generally, spent neat oils and tube reducing lubricants are contract hauled to treatment and disposal off-site.

The steel rolls used in hot and cold rolling operations may require periodic machining to remove metal buildup and to grind away any cracks or imperfections that appear on the surface of the rolls. The survey of the industry indicated that roll grinding with an oil-in-water emulsion is common practice. This emulsion is usually recycled and periodically discharged after treatment with other emulsified waste streams at the plant.

Of the surveyed plants, 112 have rolling operations. Wastewater is discharged from lead, nickel-cobalt, zinc, precious metals, titanium, and refractory metals rolling operations.

Drawing. Drawing is pulling of metal through a die or succession of dies to reduce its diameter, alter the cross-sectional shape, or increase its hardness. This process is used to manufacture tube, rod, bar, and wire. In the drawing of tubing, one end of an extruded tube is swaged to form a solid point and then passed through the die. A clamp, known as a bogie, grips the swaged end of tubing, as shown in Figure III-6. A mandrel is then inserted into the die orifice, and the tubing is pulled between the mandrel and die, reducing the outside diameter and the wall thickness of the tubing. Wire, rod, and bar drawing is accomplished in a similar manner, but the metal is drawn through a simple die orifice without using a mandrel. A diagram of a typical hydraulic draw bench is presented in Figure III-7.

Drawing may be carried out hot or cold. In order to ensure uniform drawing temperatures and avoid excessive wear on the dies and mandrels used, it is essential that a suitable lubricant be applied during drawing. A wide variety of lubricants are used for this purpose. Heavier draws, which have a higher reduction in diameter, may require oil-based lubricants, but oil-in-water emulsions are used for many applications. Graphite, ground glass, soap powders, and soap solutions may also be used for some of the lighter draws. Drawing oils are usually recycled until their lubricating properties are exhausted.

Intermediate annealing is frequently required between draws in order to restore the ductility lost by cold working of the drawn product. Degreasing of the metal may be required to prevent burning of heavy lubricating oils in the annealing furnaces.

Of the surveyed plants, 94 have drawing operations. Spent lubricants are discharged from lead, nickel, zinc, and precious metals drawing operations.

Extrusion. In the extrusion process, high pressures are applied to a cast metal billet, forcing the metal to flow through a die orifice. The resulting product is an elongated shape or tube of uniform cross-sectional area. If a piercing mandrel is used, or if the center of the billet or round has been removed by boring or trepanning, the extruded product is a tube.

There are two basic methods of extrusion practiced in the nonferrous metals forming category:

- Direct extrusion, and
- Indirect extrusion.

The direct extrusion process is shown schematically in Figure III-8. A heated cylindrical billet is placed into the ingot chamber, and the dummy block and ram are placed into position behind it. Pressure is exerted on the ram by hydraulic or mechanical means, forcing the metal to flow through the die opening. The extrusion is sawed off next to the die, and the dummy block and ingot butt are released. Hollow shapes are produced with the use of a mandrel positioned in the die opening so that the metal is forced to flow around it. A less common technique, indirect extrusion, is similar, except that in this method, the die is forced against the billet extruding the metal in the opposite direction through the ram stem. A dummy block is not used in indirect extrusion. Diagrams of extrusion tooling equipment and a typical extrusion press are presented in Figures III-9 and III-10, respectively.

Although some metals, such as lead, can be extruded cold, most metals are heated first to reduce adhesion of the die to the extrusion and the resulting cracks and flakes in the extruded product (galling). Extrusion at elevated temperatures also reduces the amount of work hardening that will be imposed on the product. Heat treatment is frequently used after extrusion to attain the desired mechanical properties and will be described, in detail, later in this section. At some plants, contact cooling of the extrusion, sometimes called press heat treatment, is practiced as the extrusion leaves the press. This can be done in one of three ways: with a water spray near the die, by immersion in a water tank adjacent to the runout table, or by passing the metal through a water wall. Contact cooling water may also be used to cool extrusion dummy blocks, though no plants in this category specifically reported its use. Following an extrusion, the dummy block drops from the press and is cooled before being used again. Air cooling is most commonly used for this purpose, but water may be used to quench the dummy blocks.

The extrusion process requires the use of a lubricant to prevent adhesion of the metal to the die and ingot container walls. In hot extrusion, limited amounts of lubricant are applied to the ram and die orifice or to the billet ends. For cold extrusion, the the container walls, billet surfaces, and die orifice must be lubricated with a thin film of viscous or solid lubricant. Many lubricants are used in extruding the metals in this category. Neat oils are used to lubricate nickel and uranium extrusion, emulsified oils for zirconium and titanium extrusion. Molten glass is also used as a lubricant in nickel extrusion; it acts as a heat insulator as well as a lubricant. Graphite and molybdenum disulfide in an oil or water base are other commonly used lubricants. Some metals (zirconium, titanium, nickel) may

be encased in a copper or steel can before extrusion. The can prevents galling of the core metal and is reduced to a very thin shell as a result of the extrusion. The thin shell is then removed from the core metal by acid pickling or machining.

Extrusion presses that are used to extrude hard alloys such as aircraft alloys operate under extremely high pressures. These presses frequently use an oil-water emulsion as the hydraulic fluid instead of neat oil which is used as the hydraulic fluid in other presses to reduce the risk of fires. Due to the nature of this hydraulic fluid and the extremely high pressures, these extrusion presses frequently develop hydraulic fluid leaks. Extrusion press hydraulic fluid leakage was reported at plants forming lead, nickel, refractory metals, titanium, and zirconium.

The steel dies used in the extrusion process require frequent dressing and repairing to ensure the necessary dimensional precision and surface quality of the product. The metal that has adhered to the die orifice is typically removed by grinding or polishing, which is a dry process.

Of the surveyed plants, 75 have extrusion operations. Wastewater is discharged from lead, nickel, precious metals, titanium, refractory metals, zirconium, and uranium extrusion operations.

Forging. Forging is deforming metal, usually hot, with compressive force into desired shapes, with or without dies. The actual forging process is a dry operation. Five types of forging are commonly practiced in the nonferrous metals forming category:

- Closed die forging,
- Open die forging,
- Rolled ring forging,
- Impacting, and
- Swaging.

In each of these techniques, pressure is exerted on dies or rolls, forcing the heated stock to take the desired shape. The first three processes are types of hot working; the other two are cold working.

Closed die forging (Figure III-11a), the most prevalent method, is accomplished by hammering or squeezing the metal between two steel dies, one fixed to the hammer or press ram and the other to the anvil. Forging hammers, mechanical presses, and hydraulic presses can be used for the closed die forging of nonferrous metals. The heated stock is placed in the lower die and, by one or more blows of the ram, forced to take the shape of the die set. In closed die forging, the metal is shaped entirely within the cavity created by these two dies. The die set comes together to completely enclose the forging, giving lateral restraint to the flow of the metal.

The process of open die forging (Figure III-11b) is similar to that described above, but in this method, the shape of the forg-

ing is determined by manually turning the stock and regulating the blows of the hammer or strokes of the press. Open die forging requires a great deal of skill and only simple, roughly shaped forgings can be produced. It is primarily used as a breakdown process to improve the workability of cast billets and to form them into rounds, octagons, and other shapes. Occasionally the process is used in development work in which items are produced in small quantities making the cost of closed-type dies prohibitive.

The process of rolled ring forging is used in the manufacture of seamless rings. In one type of ring rolling, a hollow cylindrical billet is rotated between a mandrel and pressure roll to reduce its thickness and increase its diameter (Figure III-12a). In another type of ring rolling, a hollow preform is mounted on a saddle-mandrel and reduced in wall thickness by the repeated blows of a hammer (Figure III-12b).

Impacting, depicted in Figure III-13, is a combination of cold forging and cold extrusion. The process is performed by placing a cut-off piece of metal in a bottom die. A top die consisting of a round or rectangular punch is fastened to the press ram and is driven into the metal slug. This causes the metal to be driven up around the top punch. Usually, the metal adheres to the punch and must be stripped off as the press ram rises.

Swaging, the process of forming a taper or a reduction on metal products such as rod and tubing, is another type of forging. When swaging is the initial step in drawing tube or wire, a solid point is formed by repeated blows of one or more pairs of opposing dies (this process is also called pointing). Swaging can also be used to reduce the diameter of tube or wire without a subsequent drawing operation, especially when the metal being worked is brittle (e.g., tungsten). The process of making tapered bullets from lead wire is also called swaging.

Proper lubrication of the dies is essential in forging nonferrous metals. Colloidal graphite in either a water or an oil medium is usually sprayed onto the dies for this purpose in the hot working types of forging. For shallow impressions, a single spray is usually adequate. Dies may be sprayed manually or with automatic sprays timed with the press stroke. Deeper cavities may require a second manual spray or swabbing to ensure that all die surfaces are covered.

Forging presses that are operated under extremely high pressures develop hydraulic fluid leaks. Forging press hydraulic fluid leakage was reported at plants forming nickel and titanium.

Particulates and smoke may be generated from the partial combustion of oil-based lubricants as they contact the hot forging dies. In those cases, air pollution controls may be required. Baghouses, wet scrubbers, and commercially available dry scrubbers are in use at nonferrous metals forming facilities.

Oil-in-water emulsions and neat oils are used as lubricants in swaging processes. The lubricants are usually filtered to remove metal fines and other contaminants and recirculated. As the lubricants become rancid or degraded they are discarded, either through continuous bleed or periodic batch discharge.

In addition to use in lubricants and air pollution control, water is used to cool forging dies, clean equipment, and in heat treatment. Quenching is employed to attain desired metallurgical properties, usually by plunging hot pieces in a water bath immediately after forging. Titanium, refractory metals, zirconium, magnesium, and uranium forgings are sometimes treated this way.

Of the surveyed plants, 72 have forging operations. Wastewater is discharged from lead, nickel, titanium, refractory metals, zirconium, magnesium, and uranium forging operations.

Cladding. A clad metal is a composite metal containing two or more layers that have been bonded together. Some typical clad configurations are shown in Figure III-14. The bonding may have been accomplished by roll bonding (co-rolling), solder application (brazing), or explosion bonding.

In the roll bonding process, a permanent bond between two metals is obtained by rolling under high pressure in a bonding mill. The high pressure increases the temperature of the metals, promoting codiffusion so that a metallurgical bond forms at the interface. In some cases a sintering step is required to increase bond strength. Clad metals consisting of a base metal with an overlay or inlay of precious metal are produced for the electrical and electronics industry and for jewelry applications (e.g., gold filled wire). To produce an inlay, a ditch is skived in the base metal, filled with a strip of precious metal and rolled to form a bond.

The solder application or brazing process is also used to make clad metals. The term soldering is used where the temperature range falls below 425C (800F). The term brazing is used where the temperature exceeds 425C (800F). In this process, a thin layer (film or foil) of a low melting point metal is placed between two layers of metal to be bonded. The three-layer assembly is then placed into a furnace at the melting temperature of the filler metal. Bonding results from the intimate contact produced by the dissolution of a small amount of the base metal and the top metal in the molten filler metal, without direct fusion of the two metal layers. Upon cooling, the clad material can be formed by any of the forming operations previously described.

A third method of producing clad metals, pressure bonding, is a combination of roll bonding and solder bonding. A three-layer assembly of solder and the metals to be bonded is placed into a furnace, just as in solder bonding. However, the heating is accompanied by the application of pressure, as in roll bonding. The bonded metal may be cooled by a water spray after it is

removed from the bonding furnace.

In explosion bonding, the metallurgical joining of two or more metals is accomplished by the force of a carefully detonated explosion. The explosion moves progressively across the surface of the cladder metal, accelerating it across a "standoff distance" and against the backer metal. The force of the explosion shears away the oxide- and nitride-containing surface layers of both metals and causes them to behave as a fluid. The sheared away layers are jetted out ahead of the point where the two metals collide. As the collision point advances, the jetting action produces metallurgically clean surfaces which, under extreme pressure, allow normal interatomic and intermolecular forces to create an electron-sharing bond. The result is a cold weld, with a characteristic wave pattern at the weld interface caused by the turbulent plastic metal flow after collision.

Explosion bonding is used to produce clad plate, sheet, and tubes, and to form structural transition joints. Clad plate can be used in the gauge at which it is formed or it can be rolled down to final gauge.

Except for pressure bonding which uses some contact cooling water, none of the cladding processes described above generate process wastewater. The main source of process wastewater in metal cladding operations is in cleaning the metal surfaces prior to bonding. For small batch operations, the cleaning steps can involve dipping the metal into small cleaning bath tanks and hand rinsing the metal in a sink. For larger continuous operations, the metal may be cleaned in a power scrubline. In a typical scrubline, metal strip passes through a detergent bath, spray rinse, acid bath, spray rinse, rotating abrasive scrub brushes, and a final rinse. The metal may then pass through a heated drying chamber or may air dry.

Metal Powder Production. For regulatory convenience, the production of all metal powders but beryllium have been included in this category. Atomization, depicted in Figure III-15, is the most common method of producing metal powders. In this process, a stream of fluid, usually water or gas, impinges upon a molten metal stream, breaking it into droplets which solidify as powder particles. The size and shape of atomized powder is determined by jet configuration, jet design, composition of the impinging medium, and composition of the metal. Generally, gas atomization is used to produce spherical particles while water atomization is used to produce irregularly shaped particles, required for powder metallurgy applications in which a powder is cold pressed into a compact. In addition, the duration of cooling plays an important role in determining particle configuration. Annealing usually accompanies atomization for the purpose of rearranging internal crystal structures of metal powders, and consequently improving strength.

Powders are also produced by disintegration of solid metal into powder by mechanical comminution. This process is used for brit-

tle ores or chemically embrittled metals. It is also used to produce powder from turnings and other scrap of more ductile metals. The most commonly utilized pieces of mechanical reduction equipment are ball mills, vortex mills, hammer mills, disc mills, and roll mills. Powder production with this type of machinery tends to produce angular, irregular, rod-like, and flaked physical structures. Occasionally, powders are milled in a water slurry.

In addition to its use as an atomization medium and a milling slurry, water is used to clean floors in metal powder production areas and in the equipment used to control particulate air pollution from metal powder production operations (wet scrubbers and electrostatic precipitators).

Surveyed plants produce powders from all of the metals formed by traditional means except titanium and rhenium (see Table III-3). Iron, stainless steel, and copper alloy powders are produced in the largest quantities and by the greatest number of manufacturers. The high demand for these metal powders is caused by their large-scale applications in the auto manufacturing and machining industries. After iron and steel, copper, and aluminum, and their alloys, the metal powders produced in the largest quantity are tungsten and tungsten carbide, lead and its alloys, and nickel and its alloys. Wastewater is discharged from nickel, precious metals, iron and steel, copper, aluminum, and refractory metals powder production operations.

Production of Powder Metallurgy Parts. Metal powders are formed into parts by a "press and sinter" operation, consisting of blending metal powders, compacting the mixture in a die and then heating or sintering the compacted powder in a controlled atmosphere to bond the particles into a strong shape. Parts made from pressed powder are often referred to as compacts. A diagram of two pressing configurations is presented in Figure III-16. Compaction forces range from 1.1 to 385 tons. Contact cooling water is sometimes used to cool the parts after the pressing operation. Air pollution from mixing the metals powders is sometimes controlled by wet scrubbers.

Following compaction, "green" metal powder compacts are sent to a furnace for sintering. Furnace temperatures are held below the melting point of the metal being sintered, from 1,000C to 1,800C.

To prevent formation of oxide films on particle surfaces (which inhibit formation of metallic bonds between particles) an inert atmosphere or vacuum must be maintained inside the sintering furnace. Hydrogen, although expensive, is the most commonly used inert gas. Alternatively, vacuum systems capable of maintaining a pressure of 10 MPa (2.96 x 10-6 in Hg) are typically employed. As an extra precaution against contamination with air, the vacuum furnace and its inlet and outlet ports may be jacketed with inert gas.

During the sintering process, air present in the metal compacts

before sintering is exhausted, thus decreasing the porosity of the compact and increasing its strength. Further strengthening occurs as surface metal atoms recrystallize, realigning into a close crystal lattice pattern.

For some applications, porosity may be further decreased by the process of infiltration, in which a liquid phase is allowed to penetrate the pores between metal particles during or after sintering. The liquid used may be a nonalloying metal with a lower melting point than the compacted metal, oil, or an anti-friction polymer such as polytetrafluoroethylene. Infiltration with copper is commonly used in manufacturing tungsten and molybdenum compacts for electrical contacts.

In some cases, a final mechanical fabrication step, sizing or coining, is used. In this process, the sintered compact is deformed in a closed die to produce a final shape. Sizing is used to qualify dimensions and has no effect on part density. Coining increases part density in addition to qualifying dimensions. Pressures applied during coining range up to 700 MPa (100,000 psi), depending on the size and shape of the die and the nature of the metal compact being formed. In some cases a lubricant is used to prevent the compact from adhering to the die. This lubricant is usually not discharged from the process, but lost through drag-out on the parts. Sintered metal compacts also may be rolled, extruded, or drawn.

Although many parts are ready for use after sintering is completed, a number of secondary operations are available to further finish parts to meet the need of specific applications. Finishing operations used subsequent to the forming of parts from metal powder include oil and or resin impregnation, deburring, steam oxidation, and treatment with rust inhibitor. Oil impregnation improves a part's lubricity as well as increasing corrosion resistance. When part's are to be plated, resin impregnation can be used to provide maximum sealing of porosity and prevent absorption of plating acids. Rinsing may follow both oil and resin impregnation. Deburring may be sand blasting or shot peening, both of which are dry, or tumbling with grit suspended in water. Because of their porosity, parts made from iron and steel powders may oxidize excessively. To prevent this, steam treatment to produce a protective oxide layer and treatment with rust inhibitors are commonly used. Air pollution from the steam treatment operation is sometimes controlled by wet scrubbers.

As described above, process wastewater is generated in the production of powder metallurgy parts after the pressing and sintering steps. In addition to tumbling and steam treating, the parts may be cleaned or degreased (alkaline, detergent, or solvent) prior to packing and shipping. These cleaning operations are identical to those performed on other metal products and will be described in detail later in this section.

Operations Associated With Nonferrous Metals Forming

Casting. Casting consists of filling a shaped container or mold with molten metal so that upon solidification, the shape of the mold is reproduced. Only casting which is an integral part of and performed at the same plant site as nonferrous metals forming is included in the category, that is, shot-casting and casting of billets, ingots, bars, and strip which are subsequently formed on-site. Casting performed as part of a smelting or refining operation is included in the nonferrous metals manufacturing point source category, 40 CFR Part 421. Casting of parts is included in the metal molding and casting point source category, 40 CFR Part 464.

The choice of casting method depends on the metal or alloy being cast and the ultimate use of the cast form. The casting methods used in nonferrous metals forming can be divided into four classes:

- Stationary casting;
- Direct chill casting, including arc casting;
- Continuous or semi-continuous casting;
- Shot casting.

The method of casting most widely practiced at nonferrous metals forming plants is stationary or pig casting which allows for recycle of in-house scrap. In this process, molten metal is poured into cast iron molds and allowed to air cool. Lubricants are not usually required. Although water may be sprayed onto the molten metal to increase the cooling rate, this generally does not result in any discharge.

Direct chill casting is characterized by continuous solidification of the metal while it is being poured. The length of an ingot cast using this method is determined by the vertical distance it is allowed to drop rather than by mold dimensions.

As shown in Figures III-17 and III-18, molten metal is tapped from the melting furnace and flows through a distributor channel into a shallow mold. Noncontact cooling water circulates within this mold, causing solidification of the metal. The base of the mold is attached to a hydraulic cylinder which is gradually lowered as pouring continues. As the solidified metal leaves the mold, it is sprayed with contact cooling water to reduce the temperature of the forming ingot. The cylinder continues to descend into a tank of water, causing further cooling of the ingot as it is immersed. When the cylinder has reached its lowest position, pouring stops and the ingot is lifted from the pit. The hydraulic cylinder is then raised and positioned for another casting cycle.

In direct chill casting, lubrication of the mold is required to ensure proper ingot quality. Lard or castor oil is usually applied before casting begins and may be reapplied during the drop. Much of the lubricant volatilizes on contact with the molten metal, but contamination of the contact cooling water with oil and oil residues does occur.

Arc casting is a form of direct chill casting used for refractory metals (tungsten, molybdenum, tantalum, columbium, vanadium, and rhenium), because the melting points of these metals are too high for them to be easily cast by conventional techniques. The bars serve as consumable electrodes in an arc-melting process. The end product of refining these metals is a powder which can be compacted and sintered into solid bars. Under vacuum, in an appropriate furnace consisting of a water-cooled copper crucible, the preformed bars form an electrode for striking a high current, low voltage arc between the bar and a starting pad of metal. As the bar is progressively melted, molten metal falls through the arc and forms an ingot which gradually freezes into solid form. The ingot may be remelted to improve purity or directly fabricated to product form.

Many nonferrous metals forming plants use continuous casting instead of, or in addition to, direct chill casting methods. Unlike direct chill casting, no restrictions are placed on the length of the casting, and it is not necessary to interrupt production to remove the cast product. The use of continuous casting eliminates or reduces the degree of subsequent rolling required.

A relatively new technology, continuous casting of metal first came into practice in the late 1950's. Since then, improvements and modifications have resulted in the increased use of this process. Current applications in this category include the casting of sheet and strip. Because continuous casting affects the mechanical properties of the metal cast, the use of continuous casting is limited by the metals and alloys used, the nature of subsequent forming operations, and the desired properties of the finished product. In applications where continuous casting can be used, the following advantages have been cited:

- Increased flexibility in the dimensions of the cast product;

- Low capital costs, as little as 10 to 15 percent of the cost of conventional direct chill casting and hot rolling methods; and

- Low energy requirements, reducing the amount of energy required to produce comparable products by direct chill casting and rolling methods by 35 to 80 percent, depending on the product being cast.

In addition, the use of continuous casting techniques has been found to significantly reduce or eliminate the use of contact cooling water and oil lubricants.

Two continuous casting processes are commonly used in the industry. Methods in use at a particular plant will vary somewhat, but they are similar in principle to the processes diagrammed schematically in Figures III-19 and III-20. Continuous sheet

casting, shown in Figure III-19, substitutes a *single casting* process for the conventional direct chill casting, scalping, heating, and hot rolling sequence. The typical continuous sheet casting line consists of melting and holding furnaces, a caster, pinch roll, shear, bridle, and coiler. Molten metal flows from the holding furnace to the caster headbox. The level of molten metal maintained in the headbox causes the metal to flow upwards through the top assembly, which distributes it uniformly across the width of the casting rolls. The metal solidifies as it leaves the tip and is further cooled and solidified as it passes through the internally water-cooled rolls. It leaves the caster as a formed sheet and successively passes through pinch rolls, a shear, and a tension bridle before being wound into a coil. The cooling water associated with this method of continuous sheet casting never comes into contact with the metal.

Continuous strip casting is pictured in Figure III-20. Molten metal flows from a casting pot through an open-ended die. The die is water cooled and has the same cross-section as the cast strip. As the metal leaves the die, it descends vertically past water sprays, guided by rolls. The strip can be coiled as it is cast, or small sections can be cut from the end as the strip continues to grow.

Metal shot is commonly produced by casting of a number of metals, including lead and precious metals. In the shot casting process pictured in Figure III-21, metal ingots are melted in a furnace, the furnace is tapped, and the molten metal is poured down a trough or into a heated mold. At the bottom of the trough or mold is a shot mold plate, typically made of steel or a ceramic material, which has holes punched in it. The size of the shot pellets is determined by the size of the holes.

As the molten metal flows through the holes in the shot mold it forms droplets. The droplets become round as they descend through several inches of air, then fall into a tank of water for quick quenching. This water may be stagnant or circulating. In some shot casting operations a wetting agent is added to the quench water, altering the surface tension and ensuring the formation of spherical shot particles. To prevent excessive loss of quench water through evaporation and to maintain the water temperature required by some operations, the quench water may be cooled using noncontact cooling water in a jacket around the tank.

Cast shot may be processed through a sizing operation to remove the irregular shaped particles. Reject shot is usually remelted and recast.

In this document, semi-continuous casting is used to denote a particular casting process reported in the forming of lead, tin, and bismuth. Molten metal is poured down a trough and into vertical billet molds. A tank of water is raised up around the molds to cool the metal (noncontact cooling). When the tank is lowered the billet molds are inverted and the billets fall out of

the molds and onto an inclined track. Lubricant may be placed inside the mold between casting cycles to facilitate the release of the billets. Lubricant may also be placed on the track to allow the billets to roll more easily. As the billets move down the track they are quenched with a spray of water. At the bottom of the track the billets move into a sawing operation.

In addition to its use to cast metal, water is used in equipment which controls air pollution from stationary casting and shot-sizing operations. Water is also used to wash billets immediately after casting. In vapor form, water is used to draw a vacuum from some melting furnaces. The condensed steam, which may carry any material volatilized during melting, is recirculated with a periodic blowdown.

Of the surveyed plants, 81 have casting operations. Wastewater is discharged from lead, nickel, zinc, precious metals, and refractory metals casting operations.

Heat Treatment. Heat treatment is an integral part of nonferrous metals forming practiced at nearly every plant in the category. It is frequently used both in-process and as a final step in forming to give the metal the desired mechanical properties. There are four general types of heat treatment:

- Homogenizing, to increase the workability and help control recrystallization and grain growth following casting;

- Annealing, to soften work-hardened and heat-treated metals, relieve stress, and stabilize properties and dimensions;

- Solution heat treatment, to improve mechanical properties by maximizing the concentration of hardening contaminants in solid solution; and

- Artificial aging, to provide hardening by precipitation of constituents from solid solution.

Homogenizing, annealing, and aging are dry processes, while solution heat treatment typically involves significant quantities of contact cooling water.

During casting, large crystals of intermetallic compounds are distributed heterogeneously throughout the ingot. Homogenization of the cast ingot provides a more uniform distribution of the soluble constituents within the metal. By reducing the brittleness caused by casting, homogenization prepares the ingot for subsequent forming operations. The need for homogenization and the time and temperatures required are dependent on the metal and alloy involved, the ingot size, the method of casting used, and the nature of the subsequent forming operations. Typically, the ingot is heated to an appropriate temperature and held at that temperature for four to 48 hours. The ingots are then allowed to

air cool.

Annealing is used by plants in the nonferrous metals forming category to remove the effects of strain hardening or solution heat treatment. In the annealing operation, the metal is raised to its recrystallization temperature. Nonheat-treatable, strain-hardened metals need only be held in the furnace until the annealing temperature is reached; heat-treatable metals usually require a detention time of two to three hours. In continuous furnaces such as that pictured in Figure III-22, the metal is raised to higher temperatures and detained in the furnace for 30 to 60 seconds. Once removed from the annealing furnace, it is essential that the heat-treatable metals be cooled at a slow, controlled rate. After annealing, the metal is in a ductile, more workable condition suitable for subsequent forming operations. Some metals are annealed in a protective (nonoxidizing) atmosphere to prevent discoloration of the bright surface. This process is called bright annealing and is commonly used to anneal silver and its alloys. Typical protective atmospheres are dissociated ammonia, hydrogen, and nitrogen.

Solution heat treatment, also referred to as solution annealing, is accomplished by raising the temperature of a heat-treatable metal to the eutectic temperature, where it is held for the required length of time, then quenching it rapidly. As a result of this process, the metallic constituents in the metal are held in a super-saturated solid solution, improving the mechanical properties of the metal. The required length of time the metal must be held at the eutectic temperature varies from one to 48 hours. Certain nonferrous metal alloys can be solution heat treated immediately following extrusion and forging. In this procedure, known as press heat treatment, the metal is extruded or forged at the required temperatures and quenched with contact cooling water as it emerges from the die or press.

The quenching techniques used in solution heat treatment are frequently critical in achieving the desired mechanical properties. The sensitivity of metals and alloys to quenching varies, but delays in transferring the product from the furnace to the quench, a quenching rate that is incorrect or not uniform, and the characteristics of the quenching medium used can all have serious detrimental effects. With few exceptions, contact cooling water is used to quench solution heat treated products. Spray or flush quenching is sometimes used to quench thick products. Solution heat treated forgings of certain metals can be quenched using an air blast rather than a water medium. Air quenching can also be used for certain extrusions following press heat treatment. The continuous annealing operation depicted in Figure III-22 contains a spray quench zone.

Artificial aging, also known as precipitation heat treatment, is applied to some nonferrous metals in order to cause precipitation of super-saturated constituents in the metal. The metal is heated to a relatively low temperature for several hours and then air cooled. Artificial aging is frequently used following solu-

tion heat treatment to develop the maximum hardness and ultimate tensile and yield strength in the metal. For certain metals, the mechanical properties are maximized by sequentially applying solution heat treatment, cold working, and artificial aging.

Chemical Surface Treatments. Surface treatment operations performed as an integral part of forming processes are within the scope of the nonferrous metals forming category. For the purposes of this regulation, surface treatment of nonferrous metals is considered to be an integral part of nonferrous metals forming whenever it is performed at the same plant site at which nonferrous metals are formed.

A number of chemical treatments may be applied to nonferrous metals after they are formed. The objective of these treatments is to in some way alter the surface of the metal, either by removing some of it or changing its characteristics. Wastewater discharges from these operations are generated when these solutions must be replaced with fresh chemicals and in rinsing operations used to remove residual solution from the formed metal after treatment. The contaminants in the spent solution and rinse water are a function of the chemicals used to make the solutions and the metal treated. Most of the contaminants are acids, bases, and metal salts.

The most frequently used chemical surface treatments are designed to remove the surface layer of oxidized metal created during forming of nonferrous metals at elevated temperatures. The most common method of removing this layer is to dissolve it in acid in an operation known as pickling, brightening, etching, or acid surface treatment. In addition to removing the oxide layer from a metal surface, this treatment will remove burned-on lubricants and any other substances not entirely removed by solvent or alkaline cleaning.

Pickling operations can be batch operations in which formed parts are moved from tank to tank to be dipped in acid baths, overflowing rinse tanks and spray chambers. The rinses are usually plain water, but occasionally ammonia solutions are used. A diagram of a bulk product pickling tank is presented in Figure III-23. A continuous surface treatment line, consisting of a series of tanks, can be used to provide strip metal with a series of treatments. A diagram of a typical continuous strip pickling line is presented in Figure III-24.

Sulfuric, hydrochloric, ammonium bifluoride, hydrofluoric, phosphoric, nitric, and chromic acids or acid mixtures are commonly used as pickling solutions. The pickling process may be chemical (formed metal is immersed in a tank of pickling solution and held until scale is removed) or electrochemical (electric current is forced through the pickling bath to speed up the pickling process). Acid concentration, bath temperature, and process time depend on the type of metal or alloy being treated, the components of the pickling solution, and the amount of scale to be removed.

Acid consumed during pickling operations must be periodically replenished. Dissolved metal salts in the pickling solution gradually reduce pickling efficiency. Spent pickle liquor may be concentrated by high temperature precipitation of metal salts and recycled to minimize acidic waste discharge.

Brightening solutions for nonferrous metals and alloys usually contain mixtures of two or more acids: sulfuric, phosphoric, nitric, chromic, or hydrochloric. Acid ratios and concentrations vary widely. Dipping times range from 5 seconds to greater than 5 minutes. Other chemicals such as metal salts, glycerol, or ethylene glycol also may be added to brightening solutions.

The layer of oxide scale formed from hot working operations on nickel, cobalt, titanium, zirconium, and certain refractory metals is very difficult to remove with acid surface treatment alone. Consequently, molten salt baths may be used to descale the metal prior to acid surface treatment. Molten salt baths are oxidizing baths composed of sodium hydroxide or potassium hydroxide and sodium nitrate or potassium nitrate. The nitrate is the oxidizing agent in the bath. Sodium chloride and potassium chloride are added to depress the melting part of the bath, increase fluidity, and inhibit attack on the metal itself. Sodium carbonate or potassium carbonate may be added in small proportions to adjust the melting point of the mixture, and to inhibit deleterious reactions. Molten salt baths are maintained at 480 to 540C. The formed metal parts are dipped in the baths for 15 minutes or more and then rinsed and quenched in a water bath. The molten salt bath performs its descale function by three mechanisms:

(1) Molten oxides present on the metal surface are converted to a higher oxidation state which is more soluble in the acid surface treatment operations which follow the molten salt operation;

(2) The abrupt transfer of the metal from the hot bath to the cold rinse causes a thermal shocking effect which helps loosen the scale; and

(3) Physical penetration of the molten salt on the surface of the metal helps to loosen the scale.

Physical penetration may be enhanced by agitating the molten salt baths.

Anodizing and chemical conversion coating are used to change the characteristics of the surface of formed metal by chemically or electrochemically depositing an inorganic coating to the metal. These coatings are applied for corrosion protection and in preparation for painting.

Anodizing is an electrochemical oxidation process which forms an insoluble oxide of the metal on the formed metal surface. The

oxide coating, which is extremely thin and nonporous, is used to provide corrosion resistance, decorative surfaces, a base for applying other coatings, and special electrical or mechanical properties. Anodizing is applied by immersing the metal form in an acid solution (containing fluoride, phosphate, chromate, or sodium ions) and passing a direct or alternating electrical current through the metal form. After anodizing, parts are rinsed in cold then hot water to facilitate drying.

Chemical conversion coatings are applied to previously-deposited metal or base metal for increased protection, lubricity, or in preparation for another special coating or to achieve a special surface appearance. Typical operations include chromating to form a protective film, and phosphating which is used to provide a good base for paints and other organic coatings, to lubricate the metal surface before cold forming or drawing, and to impart corrosion resistance. When chromating, the formed metal surface is coated by immersion or wetting with a solution containing hexavalent chromium and active organic and inorganic compounds. When phosphating, the metal surface is wetted, usually by immersion, with a phosphate solution which reacts with the metal surface.

Electrocoating is depositing metal in an adherent form upon the surface of a formed piece of metal which acts as a cathode. The coating may be applied as the finished surface. It may also act as a soft, lubricating coating for hard metal alloys prior to cold working (tube reducing or extruding). Lubricating coatings (often copper) are dissolved away in acid after the forming operation has been performed.

Electrocoating operations usually include precleaning with detergents followed by rinsing. The cleaned metal is electrocoated and then rinsed in one or more stages.

Surface treatments and their associated rinses are usually combined in a single line of successive tanks. In some cases, rinsewater from one treatment is reused in the rinse of another. Surface treatment rinses are the major source of wastewater in the nonferrous metals forming category. Of the surveyed plants, 154 have surface treatment operations, many plants having several. Wastewater is discharged from operations used to treat nickel, cobalt, zinc, precious metals, titanium, refractory metals, zirconium, hafnium, magnesium, and uranium. Wastewater is also generated by the equipment used to control air pollution from surface treatment of nickel, titanium, refractory metals, and uranium.

Alkaline Cleaning. Alkaline cleaning involves the removal of oil, grease, and dirt from the surface of a formed metal product using water with a detergent or other dispersing agent. Ultrasonic vibration is sometimes used in conjunction with chemical cleaners to clean wire and other fine parts.

Alkaline cleaners are formulations of alkaline salts, water, and

surfactants. Salts used include sodium hydroxide, sodium orthosilicate, trisodium phosphate, sodium metaborate, sodium carbonate, and sodium polyphosphates. Frequently, two or more of these salts are blended to form the cleaning solution.

Uninhibited alkaline cleaners will attack many nonferrous metals. Therefore, inhibiting compounds which coat the metal with a thin film to prevent etching, pitting, or tarnishing are typically added to the cleaning solution.

Alkaline solutions are commonly used to clean formed metal parts prior to chemical treatment or as a final step before packaging the product. The type of solution used depends on the metal to be cleaned and the contaminant to be removed. Alkaline cleaning may be preceded by solvent cleaning via vapor degreasing or cold cleaning. Following this step, formed metal parts are immersed in or sprayed with the alkaline cleaning solution. Solution concentration, temperature, and immersion time vary with metal type.

Following alkaline treating, metal parts are rinsed with water. Rinsewater is often warm, to decrease drying time and reduce water spotting. Spent solutions and rinses are discharged from alkaline cleaning processes. Streams are frequently combined with acid waste streams to adjust wastewater pH prior to discharge. In addition to cleaning nonferrous metals after they are formed, alkaline cleaning is used to prepare metals for cladding. The process may be hand cleaning or use a power scrubline, as described in the cladding discussion above.

Alkaline cleaning is associated with lead, nickel, zinc, precious metals, titanium, refractory metals, and zirconium forming operations.

Degreasing. Solvent cleaners are used to remove lubricants (oils and greases) applied to the surface of nonferrous metals during mechanical forming operations. Basic solvent cleaning methods include straight vapor degreasing, immersion-vapor degreasing, spray-vapor degreasing, ultrasonic vapor degreasing, emulsified solvent degreasing, and cold cleaning.

Solvents most commonly used for all types of vapor degreasing are trichloroethylene, 1,1,1-trichloroethane, methylene chloride, perchloroethylene, and various chlorofluorocarbons. Solvent selection depends on the required process temperature (solvent boiling point), product dimension, and metal characteristics. Contaminated vapor degreasing solvents are frequently recovered by distillation. The sludge residue generated is toxic and may be flammable, requiring appropriate handling and disposal procedures.

Straight vapor degreasing uses hot vapors of chlorinated solvents to remove oils, greases, and waxes. A vapor degreasing unit typically consists of an open steel tank as shown in Figure III-25. Solvent at the bottom of the tank is heated to boiling,

generating hot vapors. The heavy vapors fill the tank and are condensed at the top of the tank by cooling coils, thus containing the solvent vapors below the condensing coil level. Cooled nonferrous metal forming products are lowered into the hot vapor bath where solvent vapors condense onto the metal surface. Oils and greases are dissolved from the metal surface by the solvent.

Immersion-vapor degreasing is used to clean metal parts coated with large quantities of oil, grease, or hard-to-remove soil. Solvents used are the same as those used in straight vapor degreasing. Metal parts are first immersed in boiling solvent, then in a clean cool solvent rinse, and finally in solvent vapors. Immersion in cool solvent rinses residual matter left from the first cleaning and lowers the metal temperature so that vapor rinsing will be effective. Clean solvent for the cool rinse is supplied by condensation of pure vapors in the condenser section of the degreaser. From the condenser, solvent flows into the cool rinse chamber and overflows into the sump where it is again vaporized.

When mild scrubbing action is required to remove grease or dirt, spray-vapor degreasing is used. In this process, clean solvent is pumped from the degreaser condenser to a spray lance. Parts are impingement-sprayed with clean solvent to loosen soil and insoluble material. Spray lances may be fixed so that parts move in front of them for impingement, or may be hand-held so that an operator may direct the spray. Parts enter the degreaser's vapor phase, pass through the spray bank, and finally go through a final vapor rinse.

Ultrasonic vapor degreasing is similar to immersion-vapor degreasing, with ultrasonic transducers built into the clean solvent rinse tank. Metal parts are initially cleaned by immersion in boiling solvent, then immersed in cool solvent for ultra-sonic scrubbing, followed by a vapor or spray-vapor rinse.

During ultrasonic scrubbing, high frequency sound waves are transmitted through the solvent to the part, producing rapid agitation and cavitation (formation/implosion of solvent bubbles). The scrubbing action caused by solvent cavitation efficiently removes particulate and insoluble materials from the metal surface.

The ultrasonic frequency used depends on the type of part being cleaned, the degree of soil contamination, and the solvent used. The most commonly used frequency range is 20,000 to 50,000 cycles per second.

Emulsified solvent degreasing is primarily used to remove both water- and oil-soluble soils from complex mechanical parts. Chlorofluorocarbons are typically employed as solvents in this process. Reclamation of emulsified solvents is generally not economical.

Water contaminated with salts and other water-soluble contaminants is periodically removed from the system and replaced with clean water to renew the system's cleaning strength.

Cold solvent cleaning involves hand wiping, spraying, and immersion of metal parts in solvents to remove oil, grease, and other contaminants from the metal surface. Petroleum and chlorinated hydrocarbons are typically used in cold cleaning operations. Contaminated solvents are reclaimed by distillation or are disposed of via contractor.

Following degreasing, metal parts may be rinsed to remove adhering solvent. This practice was reported by two plants.

Mechanical Surface Treatments. Mechanical surface treatments are used, like chemical surface treatments, to alter the surface of formed nonferrous metals. Machining, grinding, polishing, tumbling (barrel finishing), and burnishing are commonly used mechanical surface treatments.

Machining is the general process of removing stock, in the form of chips, from a workpiece by forcing a cutting tool through the workpiece. Machining operations such as turning, milling, drilling, bar peeling, boring, trepanning, tapping, planing, broaching, sawing and cutoff, slitting, shaving, threading, reaming, shaping, shearing, slotting, hobbing, filing, and chamfering are included in this definition.

Grinding is the process of removing stock from a workpiece by the use of a tool consisting of abrasive grains held by a rigid or semirigid binder. The tool is usually in the form of a disk (the basic shape of grinding wheels), but may also be in the form of a cylinder, ring, cup, stick, strip, or belt. The most commonly used abrasives are aluminum oxide, silicon carbide, and diamond. The processes included in this unit operation are sanding (or cleaning to remove rough edges or excess material), surface finishing, centerless grinding, and separating (as in cut-off or slicing operations).

Polishing is an abrading operation used to remove or smooth out surface defects (scratches, pits, tool marks, etc.) that adversely affect the appearance or function of a part. Polishing is usually performed with either a belt or wheel to which an abrasive such as aluminum oxide or silicon carbide is bonded.

Both wheels and belts are flexible and will conform to irregular or rounded areas where necessary. Rotary brushes may also be used for the polishing operation. The operation usually referred to as buffing or hydrobuffing using rotary brushes is included in the polishing operation.

Burnishing is the process of finish sizing or smooth finishing a workpiece (previously machined or ground) by displacement, rather than removal, of minute surface irregularities. It is accomplished with frictional contact between the workpiece and

some hard material, such as hardened metal balls. Water may also be used to cool or rinse parts during or after mechanical surface treatment. The contact cooling water and rinsewater are sources of wastewater.

Machining, grinding, polishing, and burnishing operations commonly use a recirculated oil-water emulsion or soap solution to cool and lubricate the contact between metal and finishing tool. Spent or rancid lubricant is discharged periodically. Water may also be used to cool or rinse parts during or after mechanical surface treatment. The contact cooling water and rinsewater are sources of wastewater.

Tumbling or barrel finishing is a controlled method of processing parts to remove burrs, scale, flash, and oxides as well as to improve surface finish. Widely used as a finishing operation for many parts, it obtains a uniformity of surface finish not possible by hand finishing. For large quantities of small parts it is generally the most economical method of cleaning and surface conditioning. Parts to be finished are placed in a rotating barrel or vibrating unit with ceramic or metal slugs or abrasive media, water or oil, and usually some chemical compound to assist in the operation. As the barrel rotates slowly, the upper layer of the work is given a sliding movement toward the lower side of the barrel, causing the abrading or polishing action to occur. The same results may also be accomplished in a vibrating unit, in which the entire contents of the container are in constant motion. When the parts have been sufficiently deburred they are drained in a basket or shaker table and transferred to an oven for drying. The tumbling solution is usually used once and then discarded.

Sawing. Sawing is cutting a workpiece with a band, blade, or circular disc having teeth. It may be required for a number of metal forming processes. Before ingots can be used as stock for rolling or extrusion, the ingot may require scalping or sawing to a suitable length. Following processes such as rolling, extrusion, and drawing, the metal products may be sawed. The circular saws and band saws used generally require a cutting lubricant in order to minimize friction and act as a coolant. Oil-in-water emulsions or mineral-based oils are usually applied to the sides of the blade as a spray. In some cases, a heavy grease or wax may be used as a saw lubricant. Normally, saw oils are not discharged as a wastewater stream. The lubricants frequently are carried over on the product or removed together with the saw chips for reprocessing. In some cases, however, recycle and discharge of a low-volume saw lubricant stream is practiced. Contact cooling water may also be used in the sawing process. Following sawing, parts may be rinsed to remove grit and lubricant from the metal.

Product Testing. Various product testing operations are used to check nonferrous metals parts for surface defects or subsurface imperfections. Parts are submerged in a water bath and subjected to ultrasonic signals, or in the case of tubing, pressurized with

air. Piping and tubing may also be filled with water and pressurized to test their integrity. Dye penetrant testing is another product testing operation. Product testing operations are sources of wastewater because the spent water bath or test media must be periodically discarded due to the transfer into the testing media of oil and grease, solids, and suspended and dissolved metals from each product tested. In addition, a rinse may be needed following operations such as dye penetrant testing to remove chemicals from the part.

Other Operations Generating Wastewater. Other operations associated with nonferrous forming which generate wastewater include:

- Steam cleaning,
- Equipment cleaning,
- Area cleaning,
- Drum wash,
- Laboratories,
- Laundries, and
- Miscellaneous operations.

Steam is sometimes used for cleaning purposes such as removing lubricant from the inside of tubes. The discharge of condensate from steam cleaning operations was reported by two plants in the nickel-cobalt forming subcategory. Wastewater from cleaning various equipment such as forging presses, ring rollers, spray driers, and saws was reported by a few refractory metal forming plants. Area cleaning, drum wash, laboratory and laundry wastewater streams were reported by uranium forming plants. Except for laboratory wastes, these uranium forming operations originate from cleaning operations used to comply with the Nuclear Regulatory Commission (NRC) and occupational safety and health regulations.

Table III-1

METAL TYPES NOT FORMED ON A COMMERCIAL SCALE, OR FOR WHICH FORMING OPERATIONS GENERATE NO WASTEWATER

Cadmium (Cd)

Chromium (Cr)

Gallium (Ga)

Germanium (Ge)

Indium (In)

Lithium (Li)

Manganese (Mn)

Neodymium (Nd)

Praseodymium (Pr)

Table III-2

METAL TYPES COVERED UNDER THE NONFERROUS METALS FORMING CATEGORY

Bismuth (Bi)	Rhenium (Re)
Cobalt (Co)	Silver (Ag)
Columbium (Niobium) (Cb (Nb))	Tin (Sn)
Gold (Au)	Titanium (Ti)
Hafnium (Hf)	Tungsten (W)
Lead (Pb)	Uranium-Depleted (U)
Magnesium (Mg)	Vanadium (V)
Molybdenum (Mo)	Zinc (Zn)
Nickel (Ni)	Zirconium (Zr)
Palladium (Pd)	Iron, Copper, and Aluminum Metal Powder Production and Powder Metallurgy Operations
Platinum (Pt)	

Table III-3

YEARS SINCE NONFERROUS FORMING OPERATIONS BEGAN AT PLANT

Plant Discharge Status	AGE AS OF 1985 (YEARS)													
	0-5	6-10	11-15	16-20	21-25	26-30	31-35	36-40	41-50	51-60	61-74	75+	Insufficient Data	Total
Direct	2	0	2	2	7	9	4	1	3	1	1	2	4	38
Indirect	10	7	9	13	10	21	13	4	4	4	7	6	13	121
Zero	12	21	19	17	16	15	8	6	7	7	2	7	43	175
TOTAL	24	28	30	32	33	45	25	11	14	12	10	10	60	334

Table III-4

NONFERROUS METAL PRODUCTION BY PRODUCT FORMED IN 1981 (POUNDS)

Metal	Plate	Sheet and Strip	Foil and Leaf	Tubing, Bar, and Rod	Wire and Cable	Irregular Shapes	Powders	Other	Total
Lead-Tin-Bismuth[1]	3,392,454	98,405,844	10,632,969	28,490,665	59,477,444	23,936,451	6,633,810	160,448,300	391,417,937
Nickel	8,367,100	19,017,611	2,100	41,606,002	31,255,978	17,715,599	6,758,852	23,182,698	147,905,940
Cobalt	66,000	671,000	0	516,351	137,826	180,900	613,139	363,948	2,549,164
Zinc	163,558	22,052,143	100,000	423,252	6,292,230	25,495,000	3,919,600	0	58,445,783
Precious Metals[1,2]	600,756	1,903,619	68,881	30,881	4,237,537	350,833	304,946	1,693,819	9,191,272
Titanium	6,133,244	6,024,982	240	12,700,524	0	17,856,871	0	20,958,569	63,674,430
Refractory Metals[3]	272,335	331,377	16,722	2,420,615	1,651,192	7,609,942	18,033,783	3,582,433	33,918,999
Zirconium-Hafnium[1]	647,845	539,696	54,531	3,776,996	40,623	447,854	60,154	304,839	5,872,538
Iron	--	--	--	--	--	71,315,052	69,148,748	28,727,830	169,191,600
Copper	--	--	--	57,742	--	8,184,051	28,594,139	2,933,233	39,769,165
Aluminum	--	--	--	--	--	222,556	18,364,657	6,739,520	25,326,733
Magnesium	*	*	*	*	*	*	*	*	*
Uranium	*	*	*	*	*	*	*	*	*
Other4	0	1,768	33,450	30,480	321	120,660	4,609,174	40,137,083	44,932,936
Total	19,643,292	148,948,040	10,908,893	90,053,508	103,093,151	173,435,769	157,040,972	289,072,272	992,195,897

*Production information for this subcategory is confidential.

1It was not possible to break out production of these metals from information supplied in data collection portfolios.

2Precious metals includes silver, gold, platinum, and palladium.

3Refractory metals includes tungsten, columbium, tantalum, molybdenum, rhenium, and vanadium.

4Cadmium, chromium, gallium, germanium, indium, lithium, manganese, neodymium, and praseodymium; all excluded from regulation.

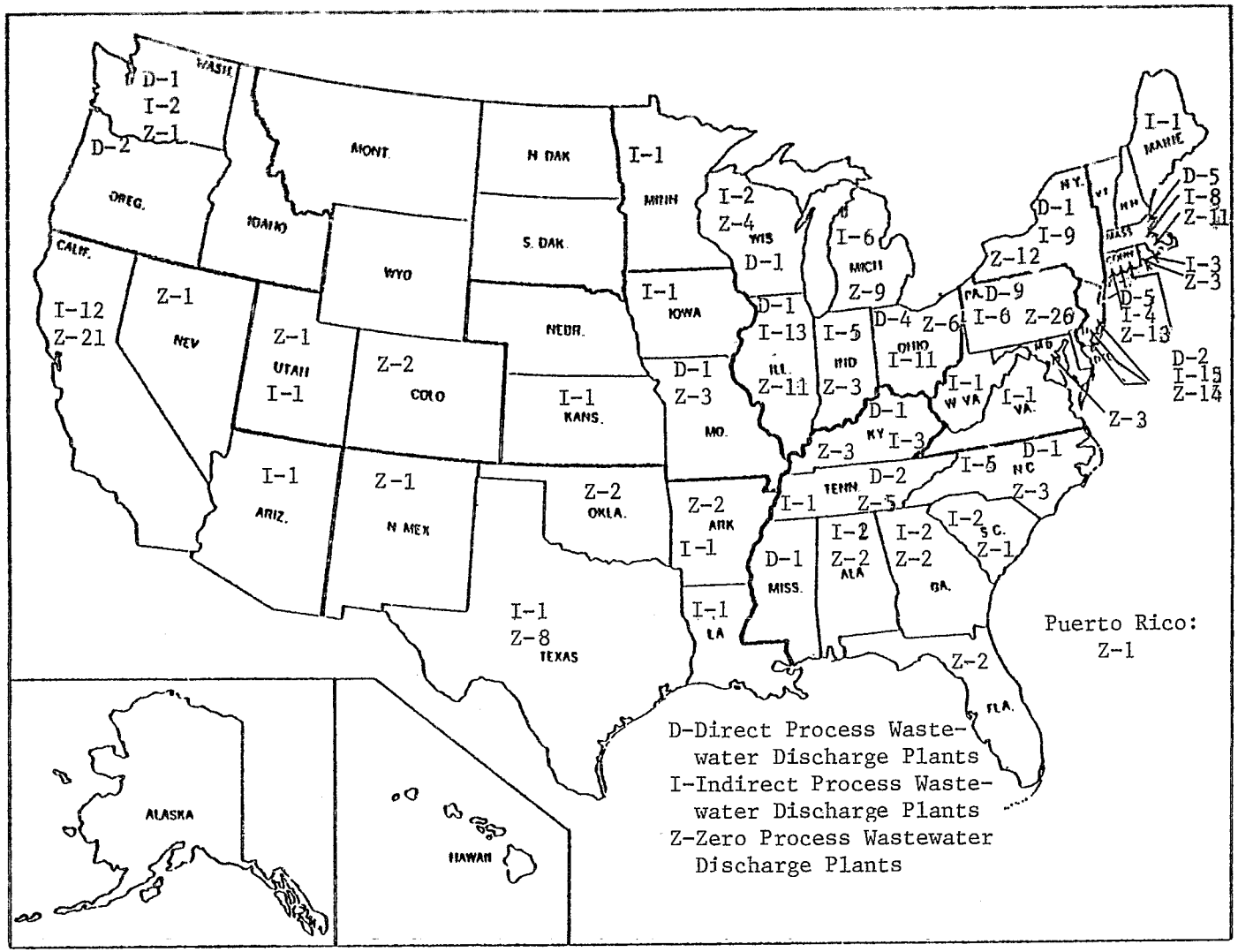

1. Three plants (in MA, CT, and TN) are both D & I dischargers but were classified as D.
2. Four plants (in PA, CT, TS, and NY) are both D & I dischargers but were classified as I.

Figure III-1

GEOGRAPHICAL DISTRIBUTION OF NONFERROUS FORMING PLANTS

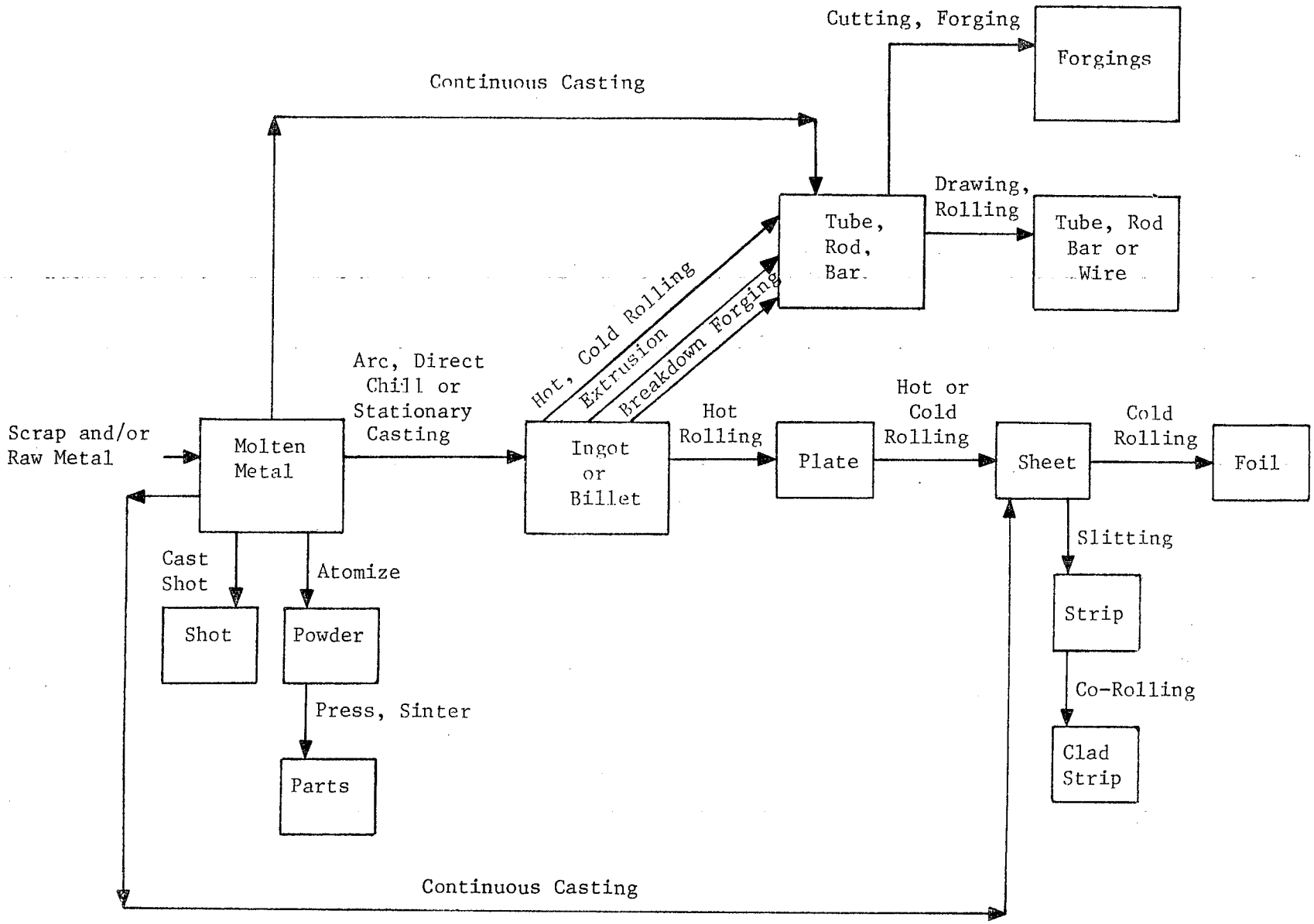

Figure III-2

SEQUENCE OF NONFERROUS METALS FORMING OPERATIONS

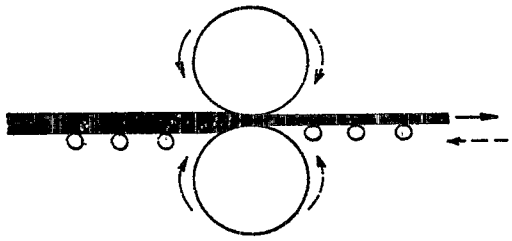

A. TWO - HIGH REVERSING MILL

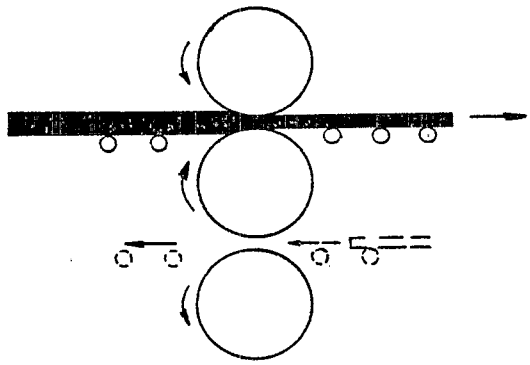

B. THREE - HIGH CONTINUOUS ROLLING MILL

Figure III-3

COMMON ROLLING MILL CONFIGURATIONS

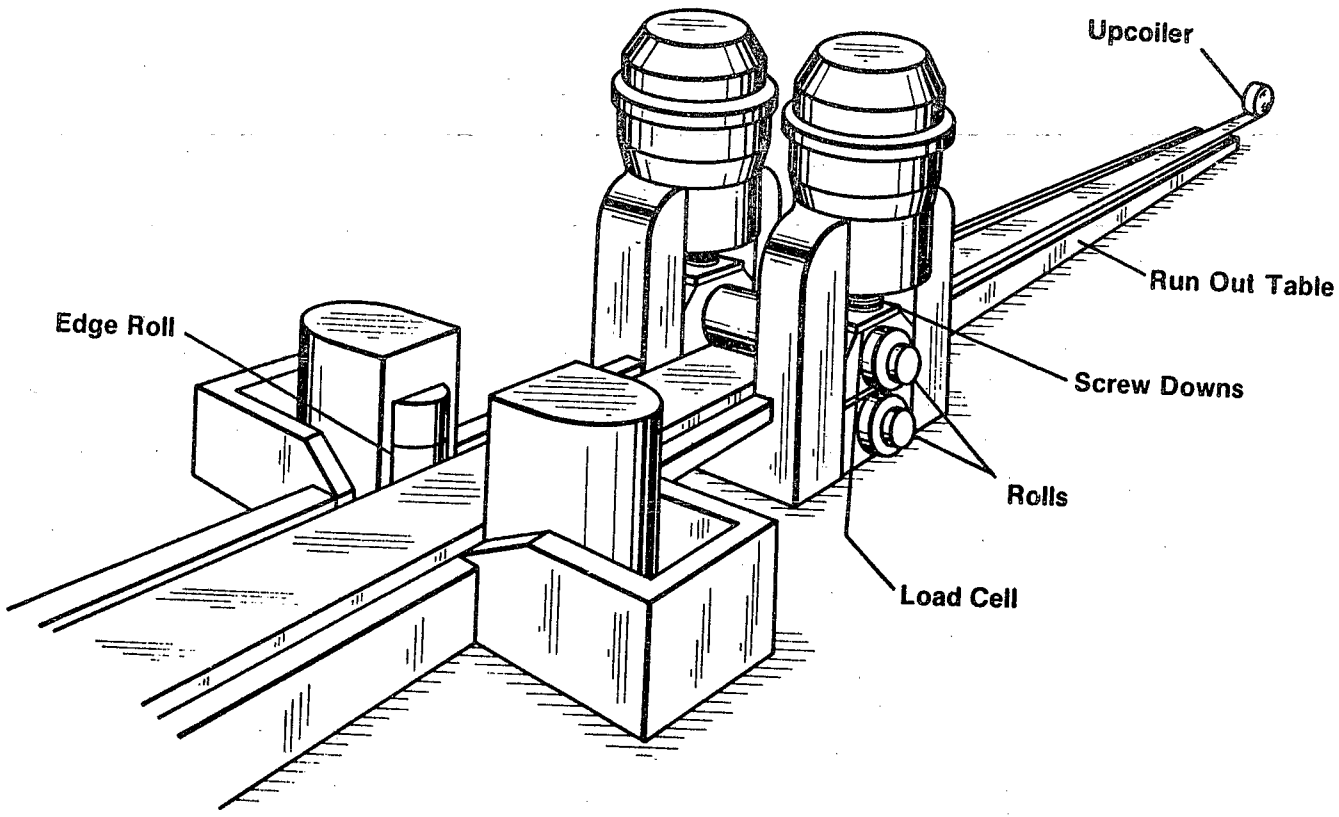

Figure III-4

REVERSING HOT STRIP MILL

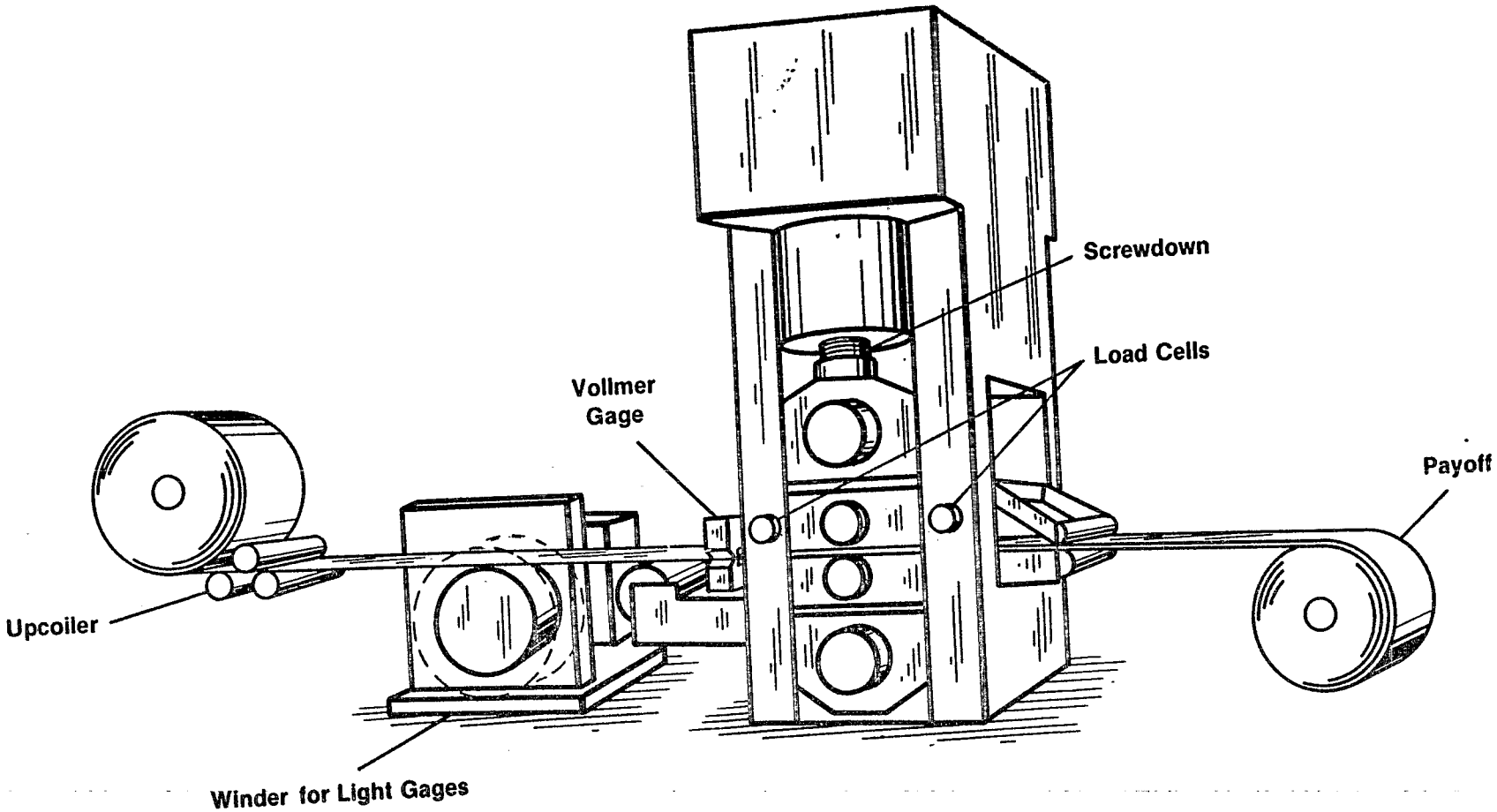

Figure III-5

4-HIGH COLD ROLLING MILL

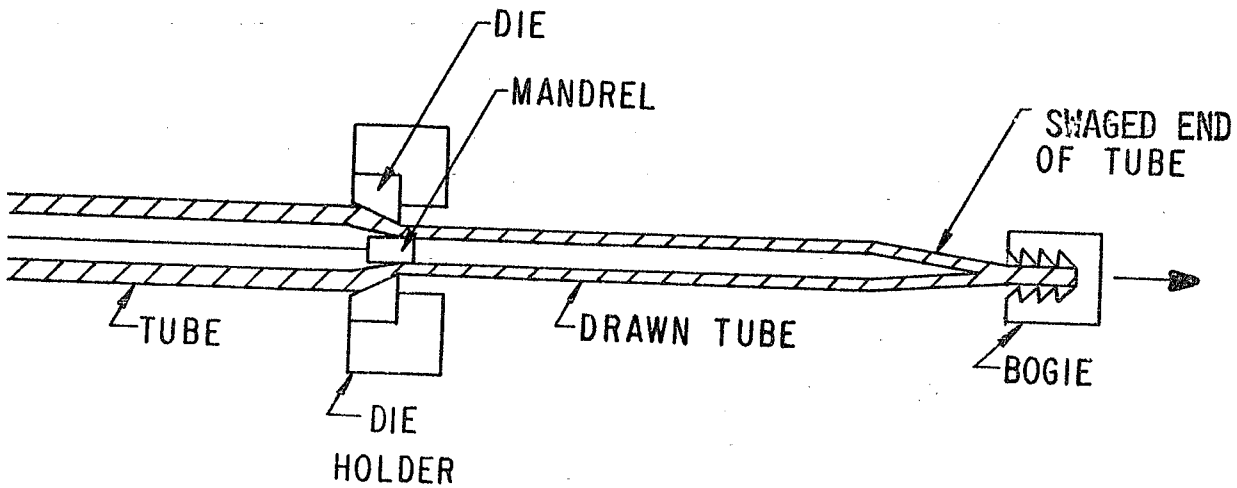

Figure III-6

TUBE DRAWING

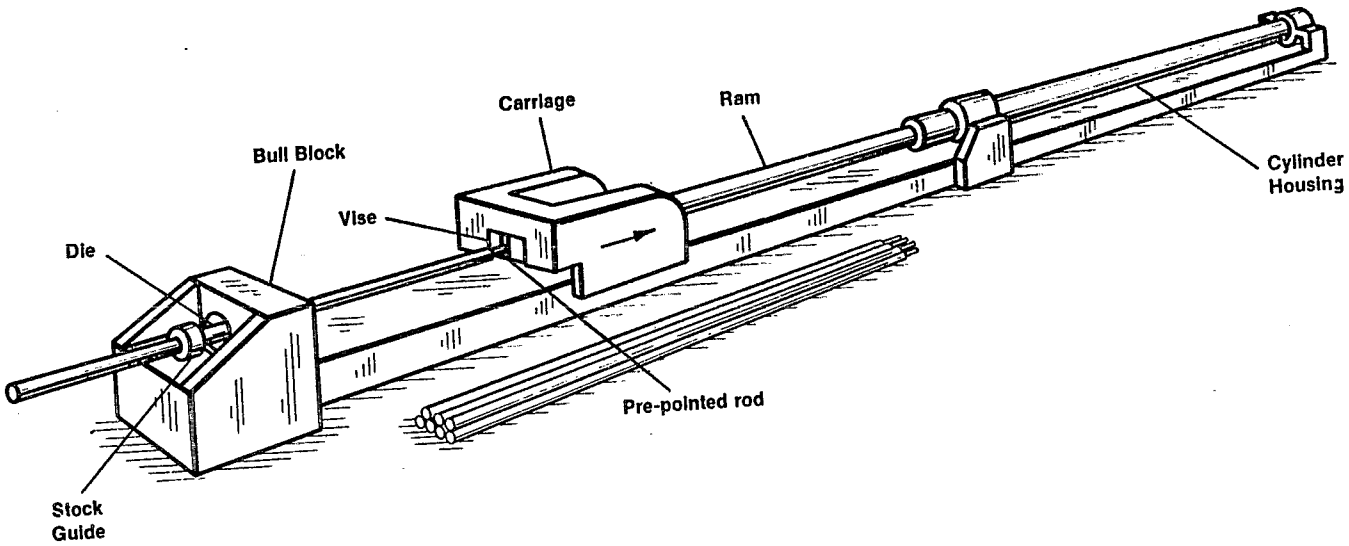

Figure III-7

HYDRAULIC DRAW BENCH

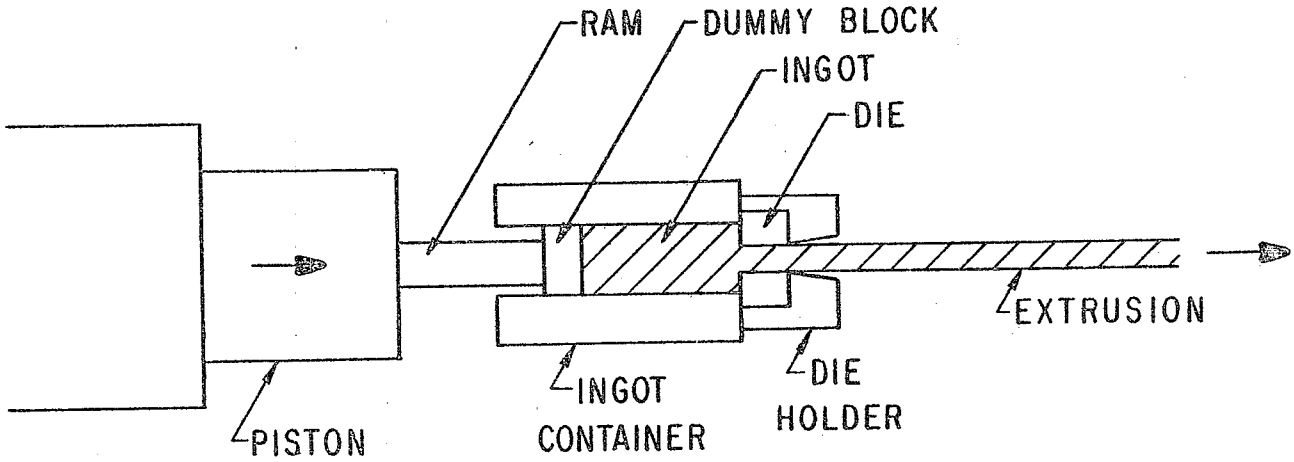

Figure III-8

DIRECT EXTRUSION

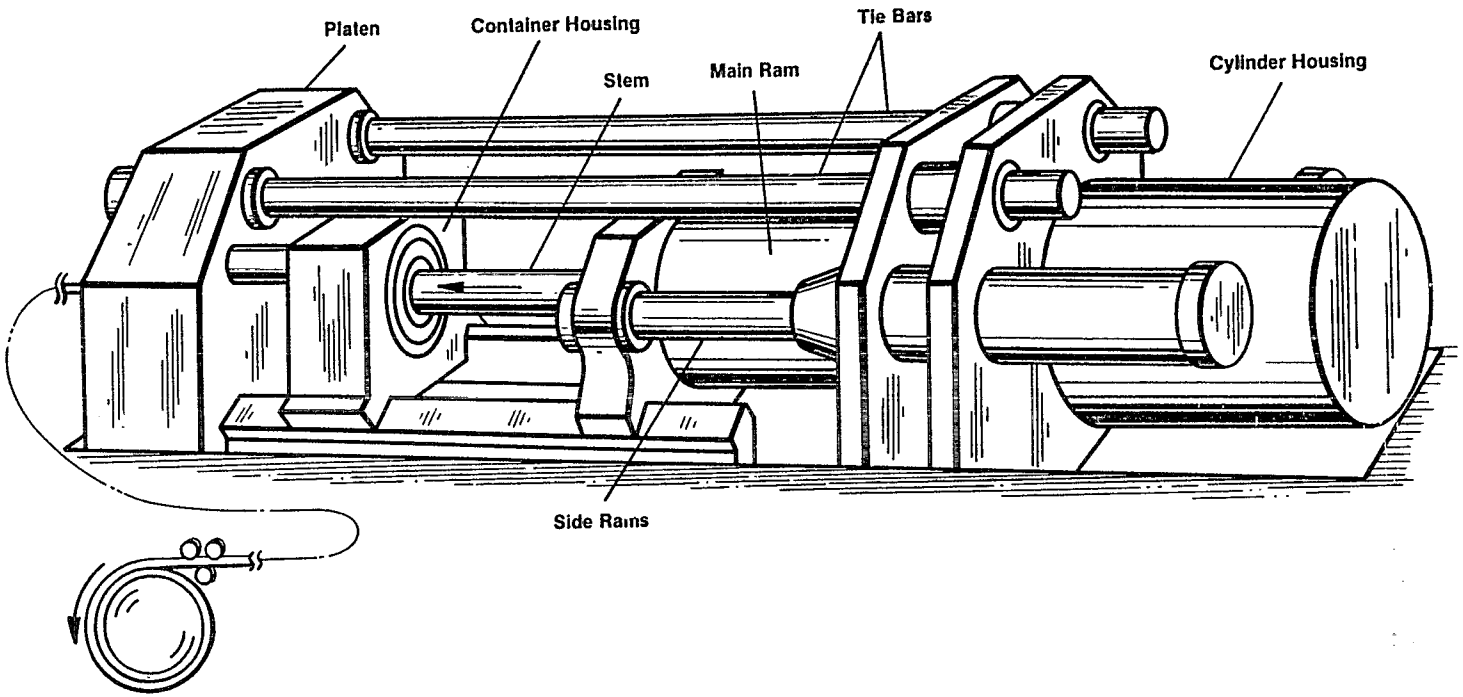

Figure III-9

EXTRUSION PRESS

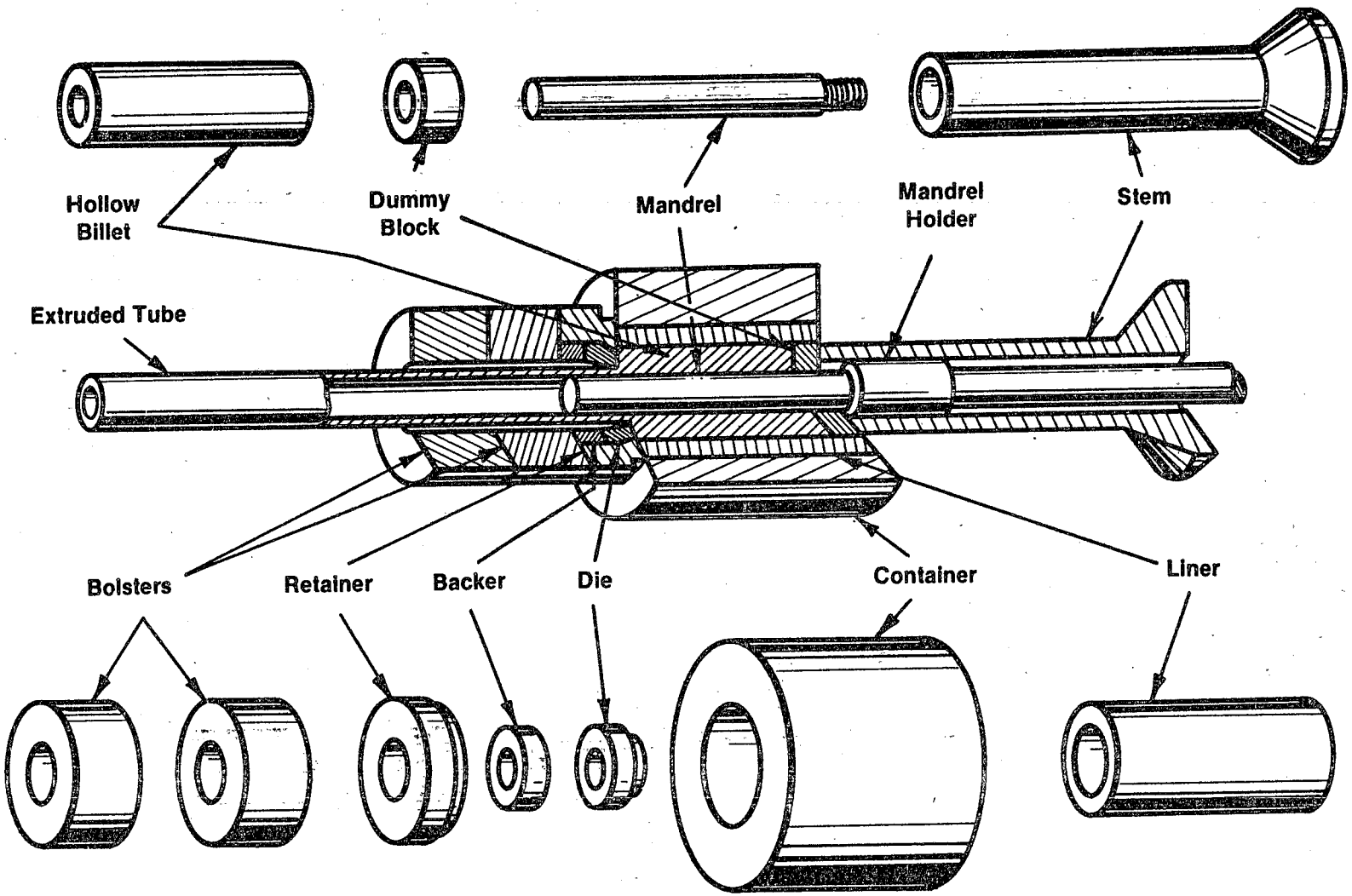

Figure III-10

EXTRUSION TOOLING AND SETUP

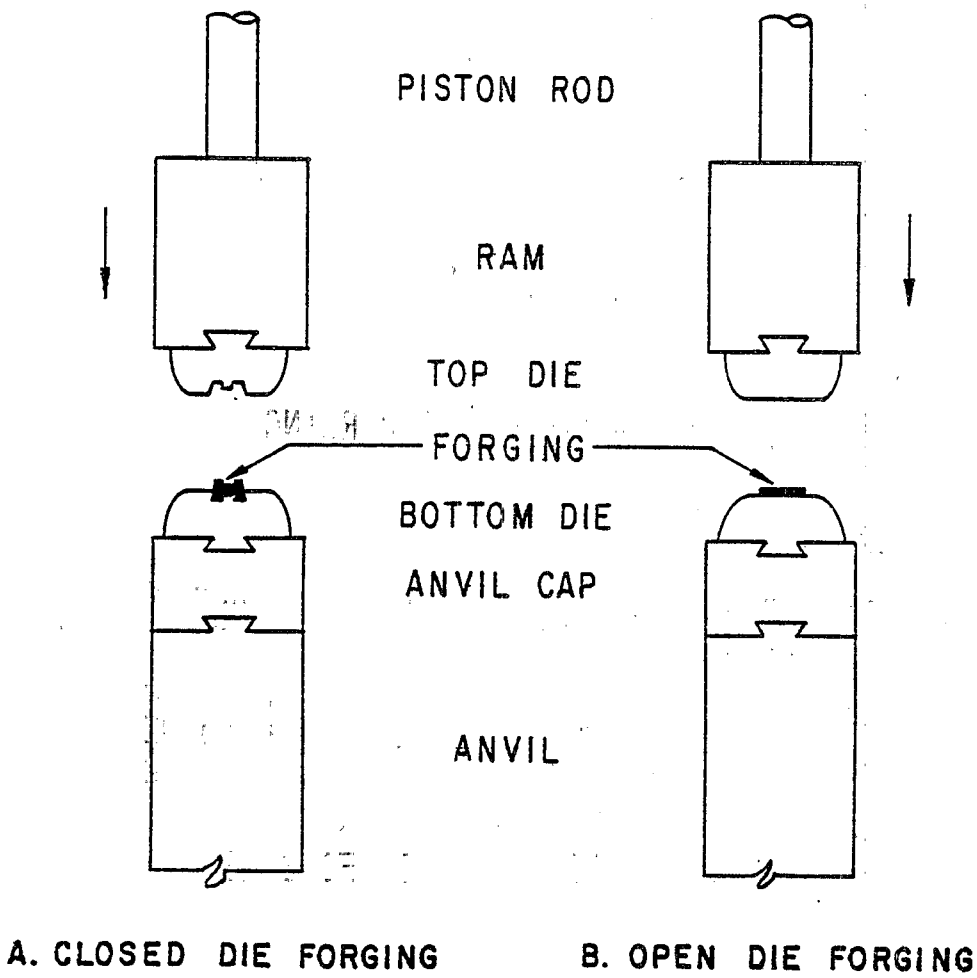

Figure III-11

FORGING

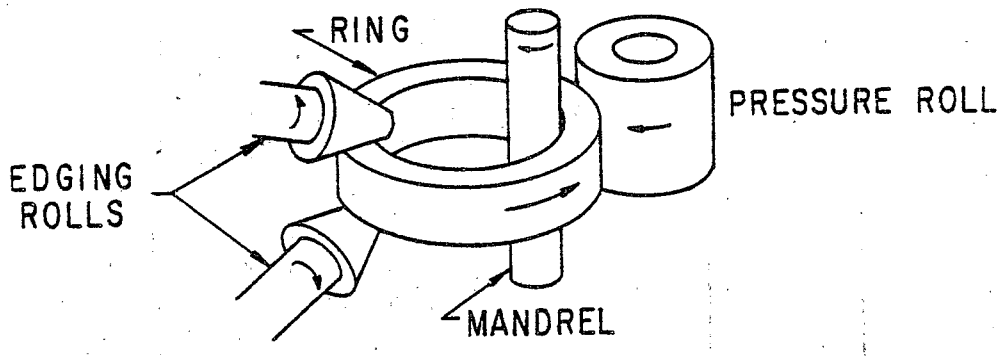

A. ROLLED RING FORGING

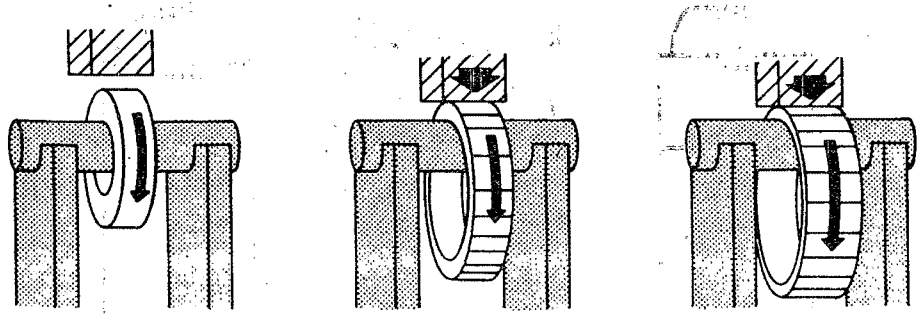

B. SADDLE/MANDREL FORGING

Figure III-12

RING ROLLING

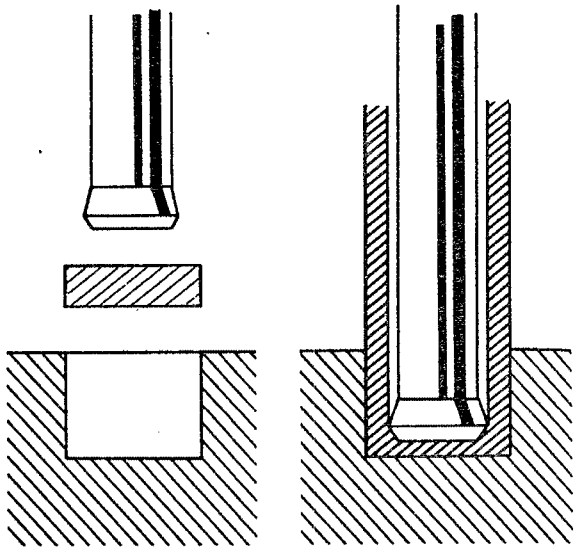

Figure III-13

IMPACTING

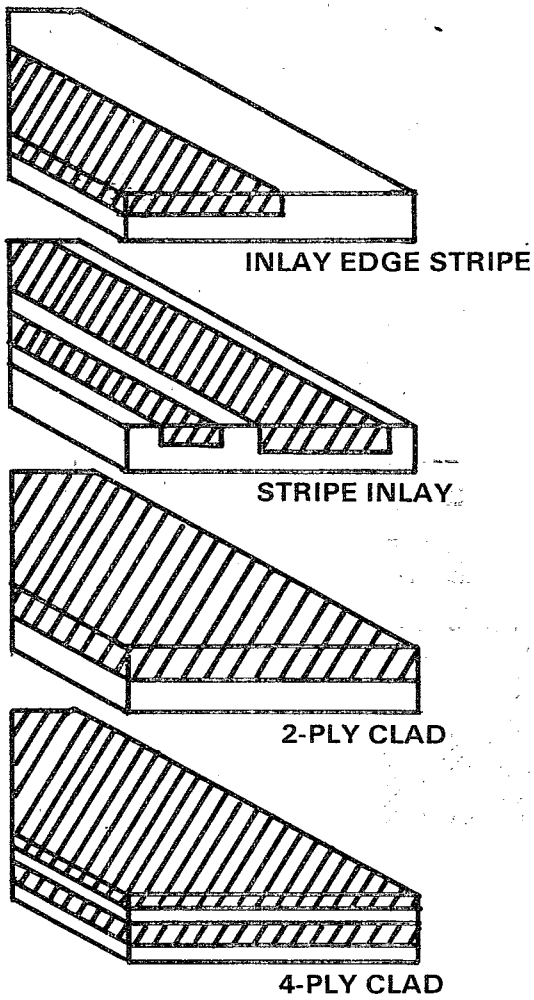

Figure III-14

SOME CLAD CONFIGURATIONS

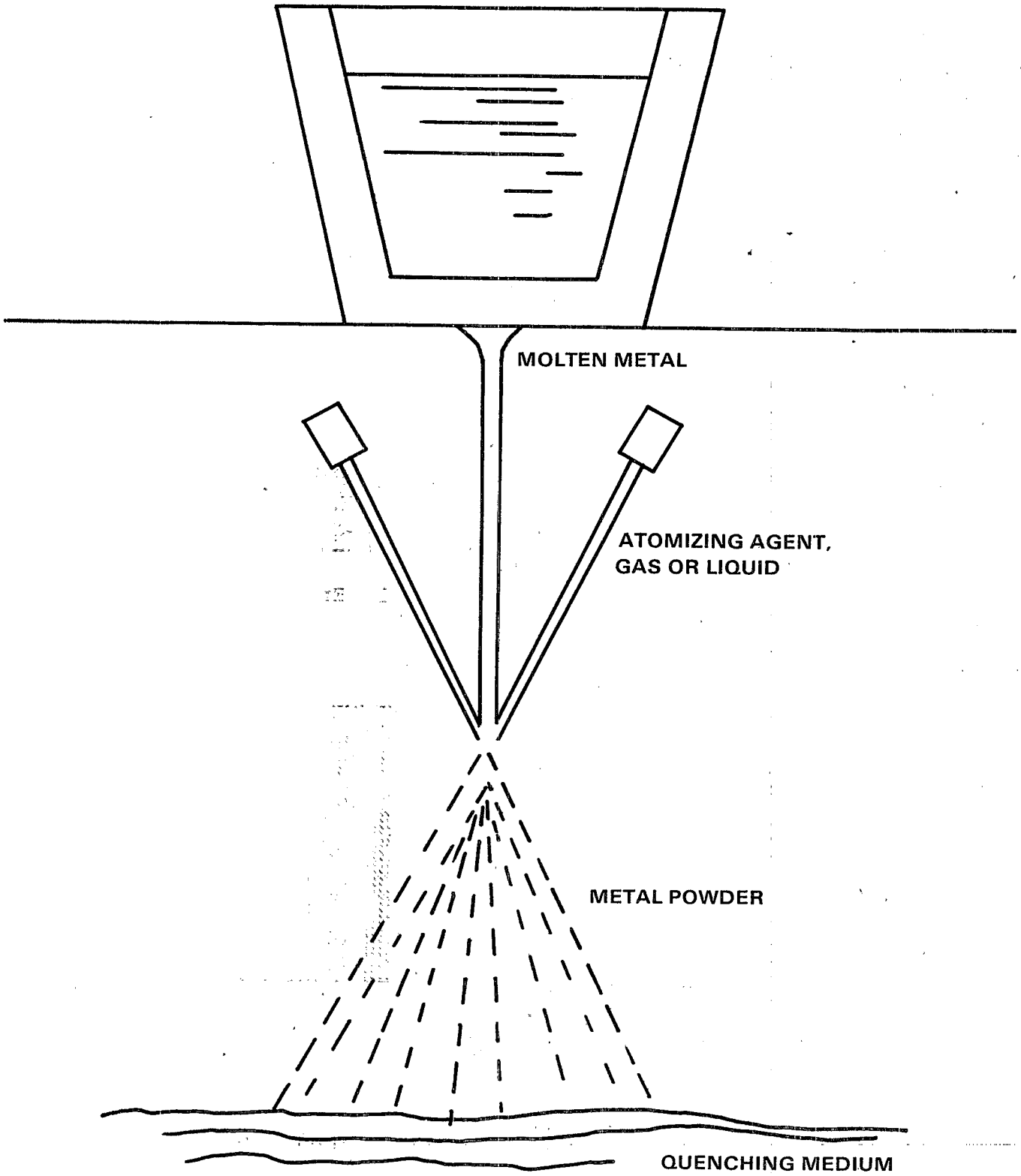

Figure III-15
ATOMIZATION

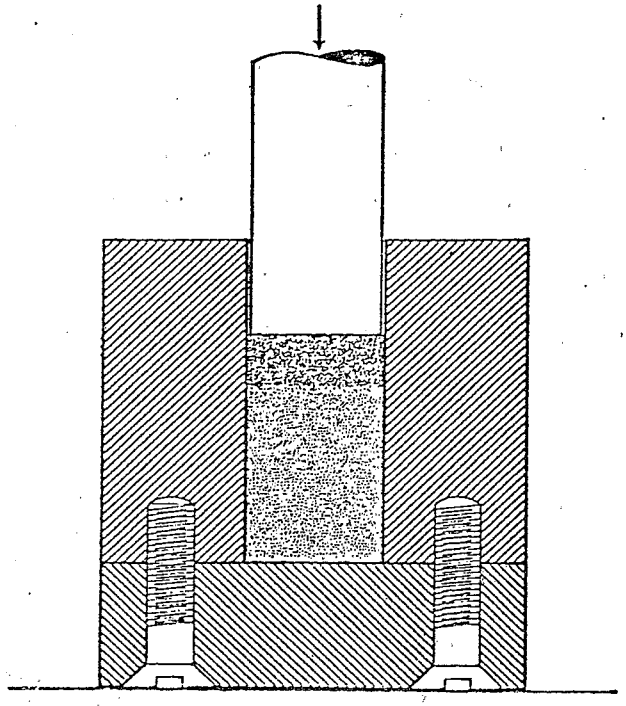

A. Pressing In Single-End Die

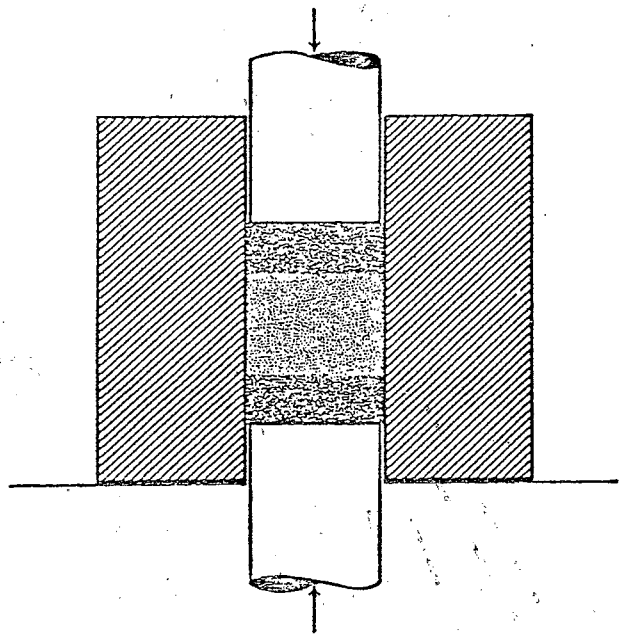

B. Pressing In Double-End Die

Figure III-16

POWDER METALLURGY DIE COMPACTION

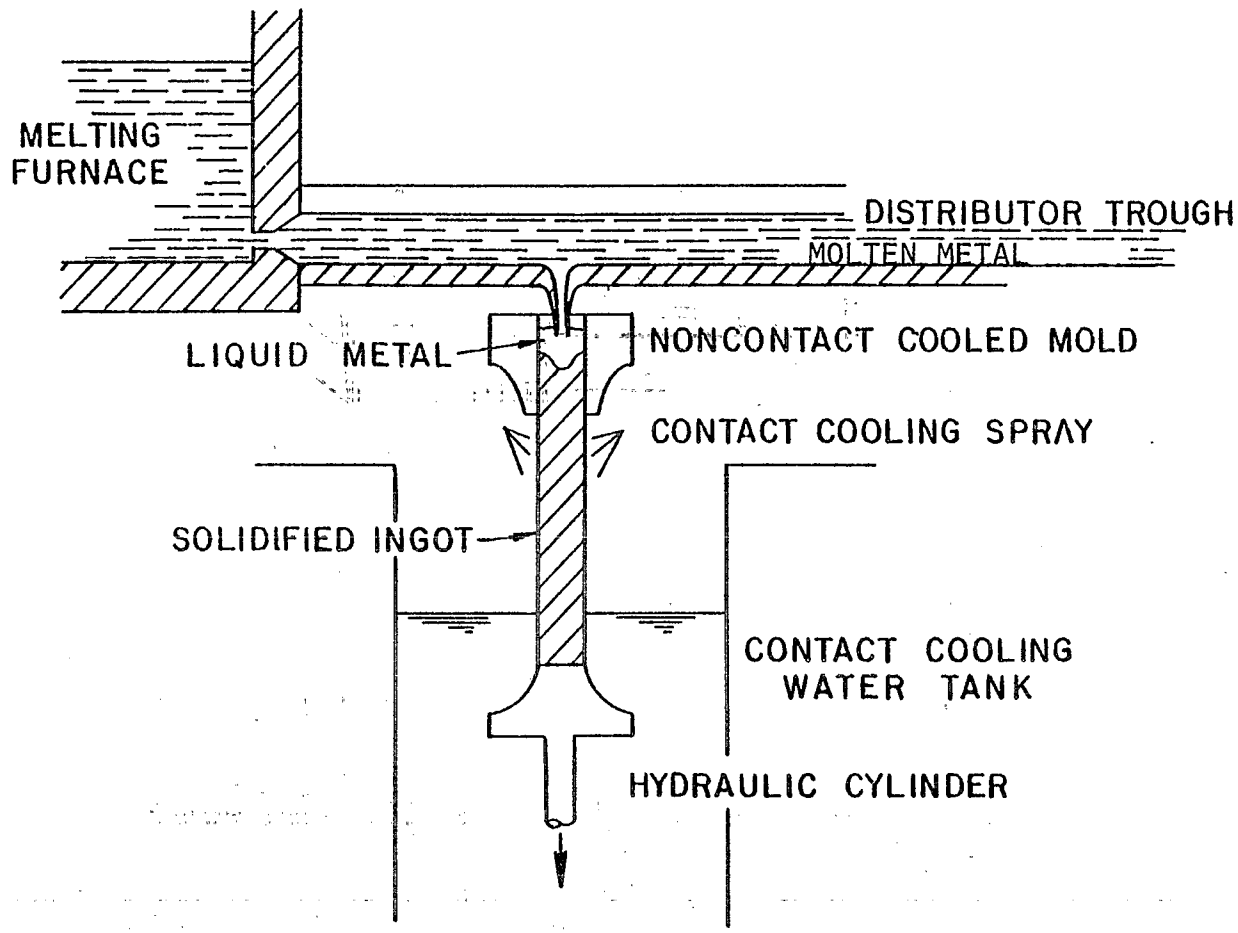

Figure III-17

DIRECT CHILL CASTING

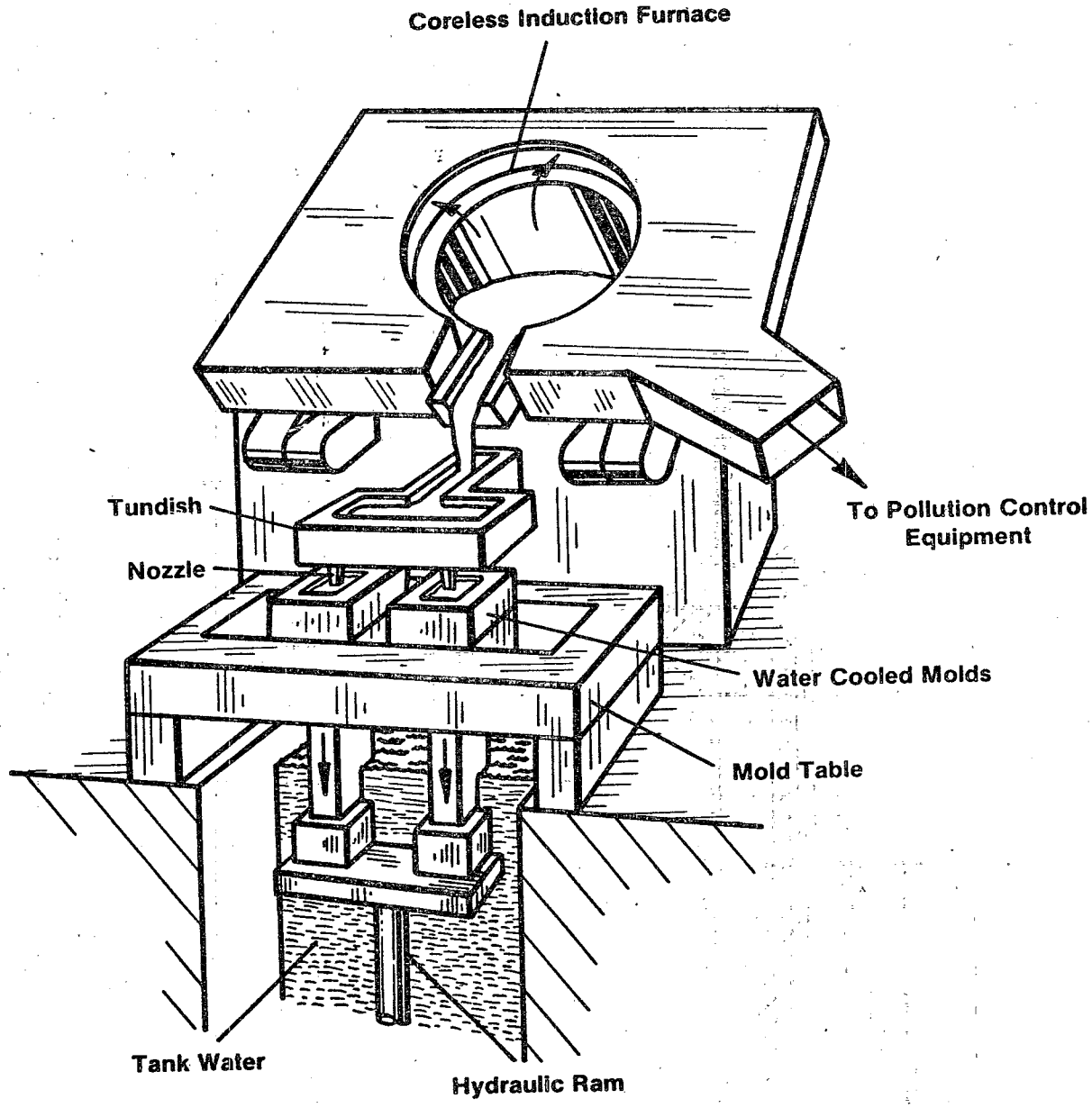

Figure III-18

DIRECT CHILL (D.C.) CASTING UNIT

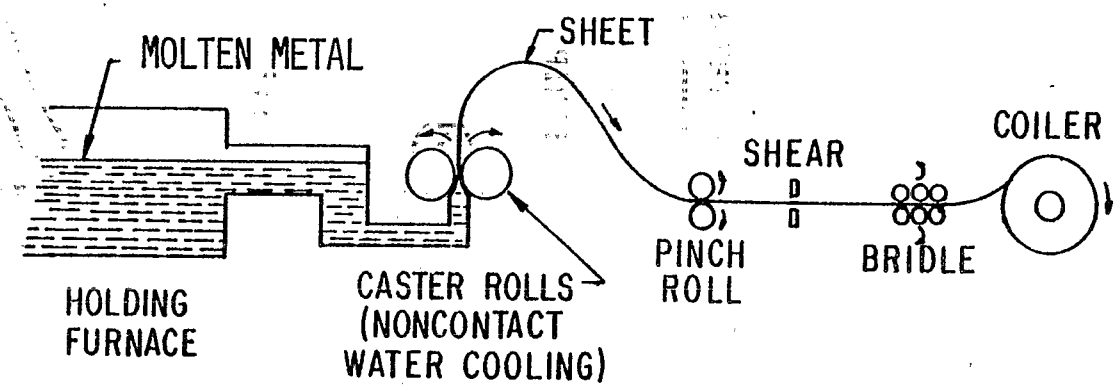

Figure III-19

CONTINUOUS SHEET CASTING

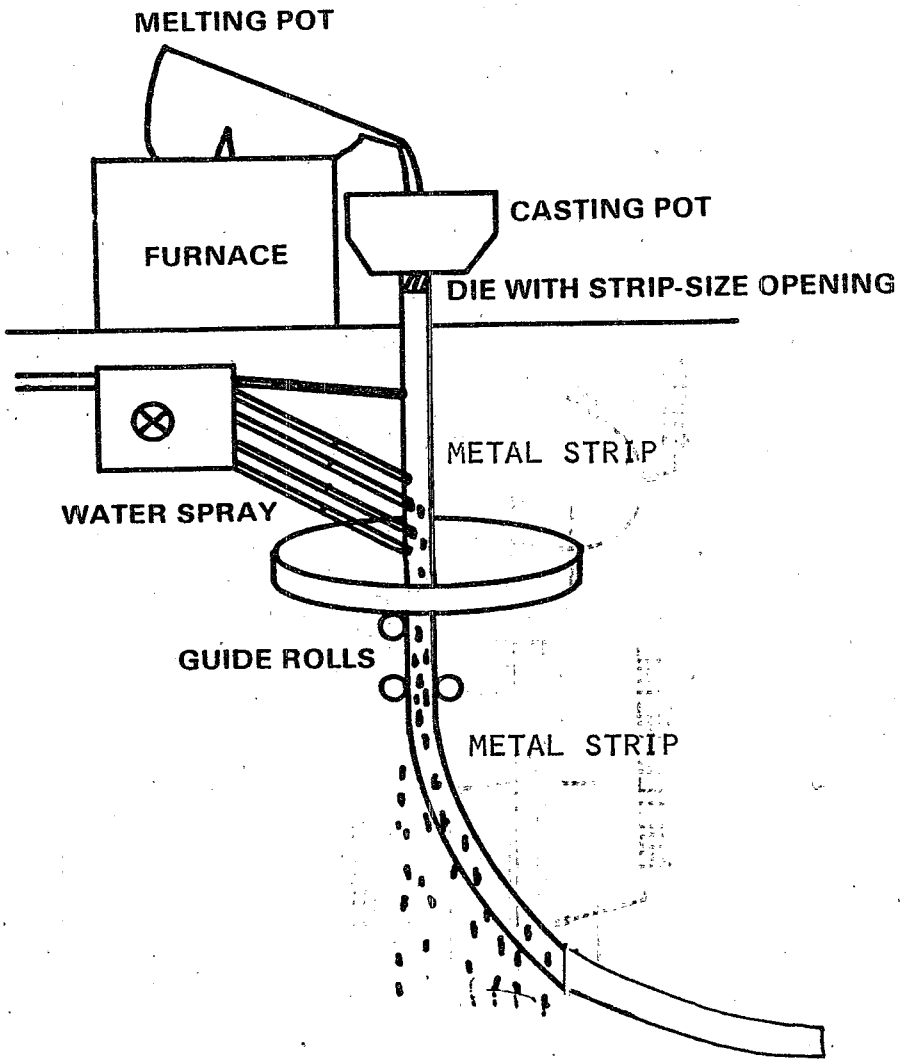

Figure III-20
CONTINUOUS STRIP CASTING

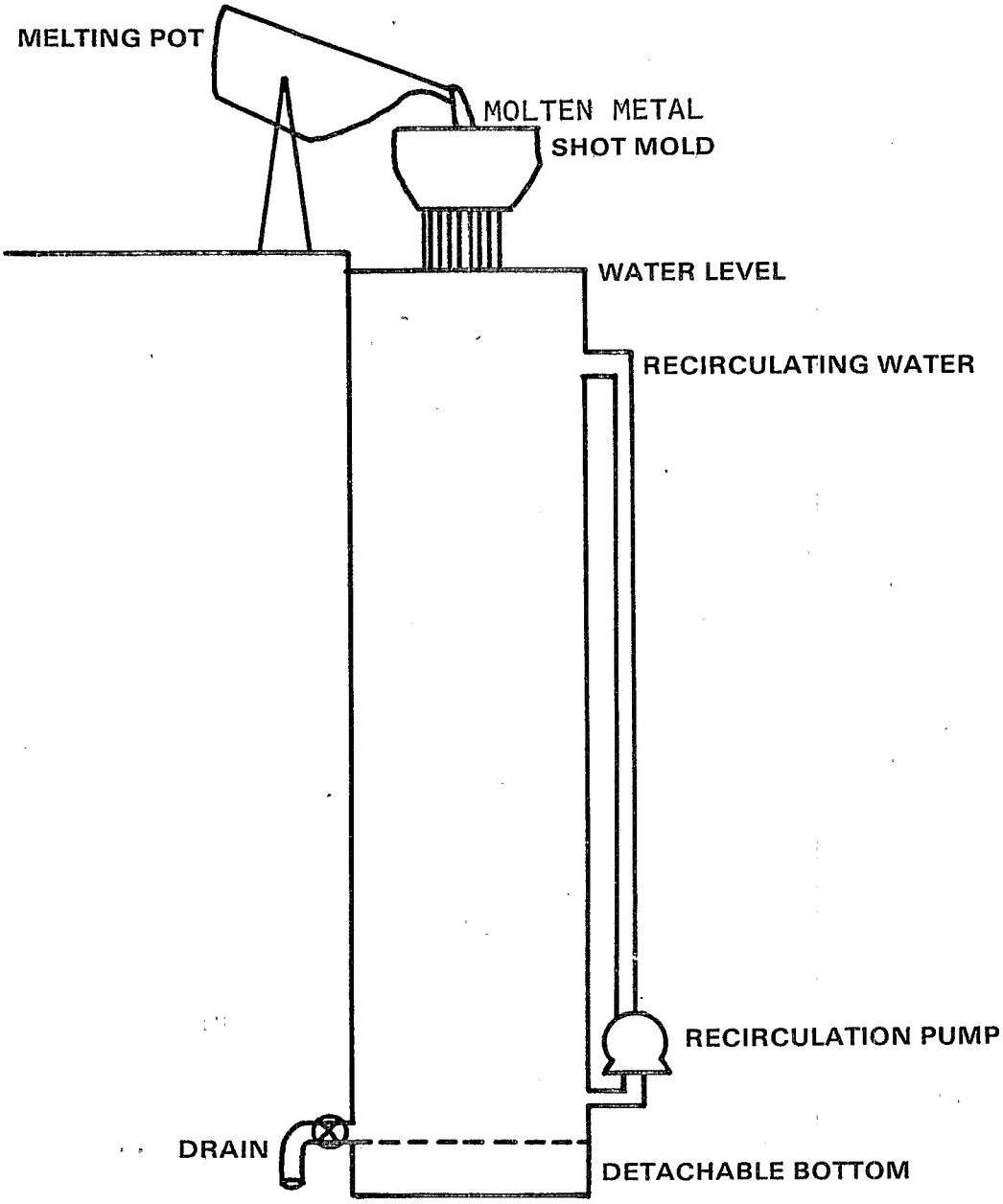

Figure III-21
SHOT CASTING

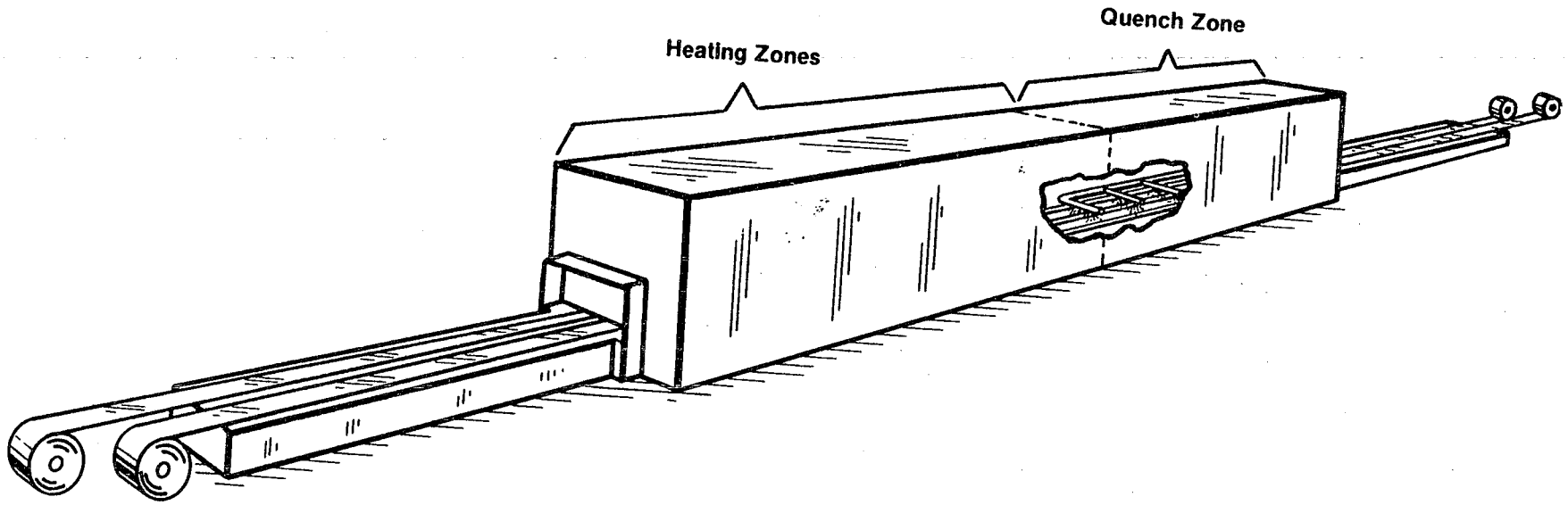

Figure III-22

ROLLER HEARTH ANNEALING FURNANCE

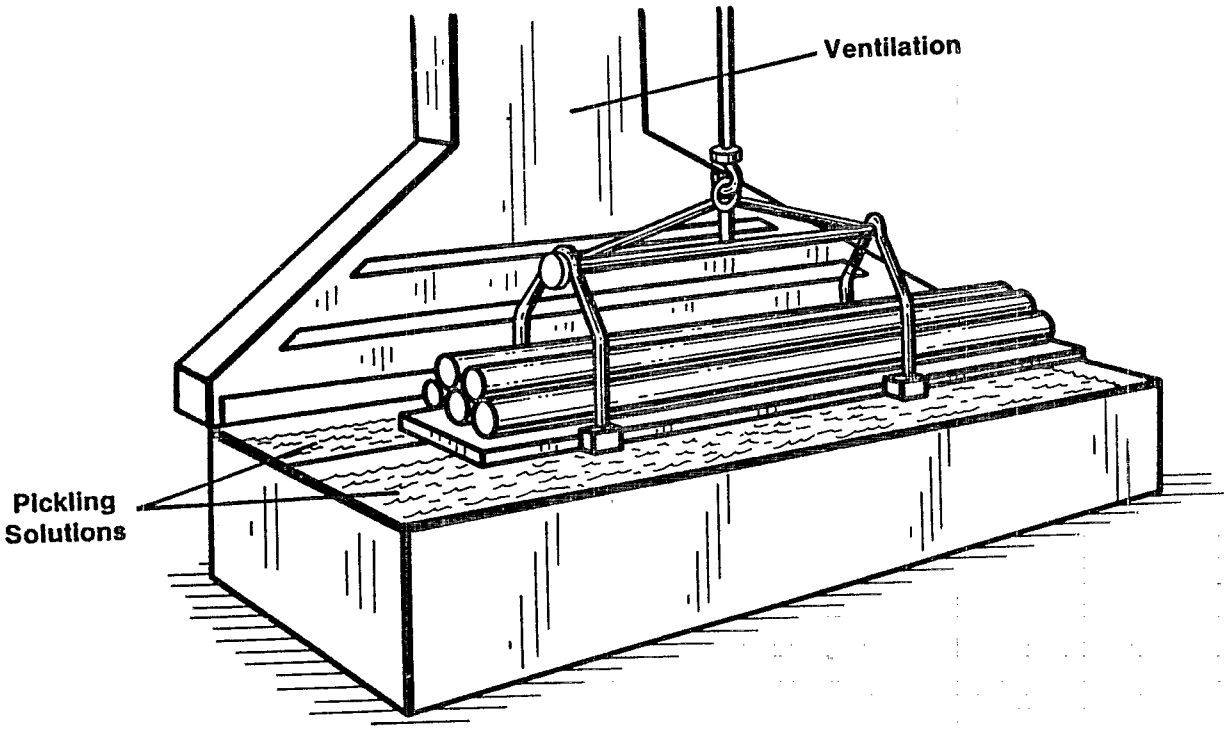

Figure III-23

BULK PICKLING TANK

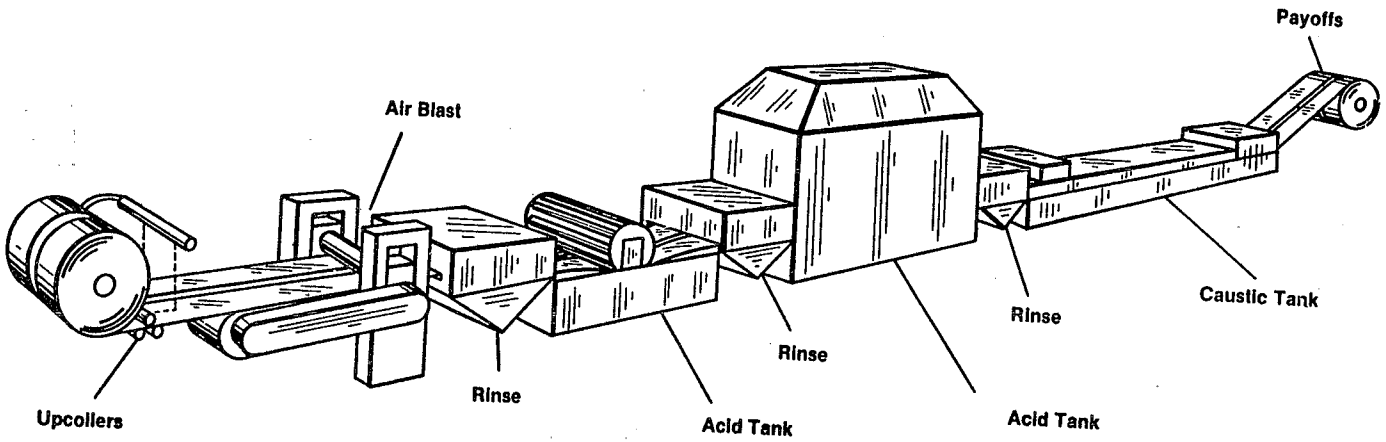

Figure III-24

CONTINUOUS PICKLING LINE

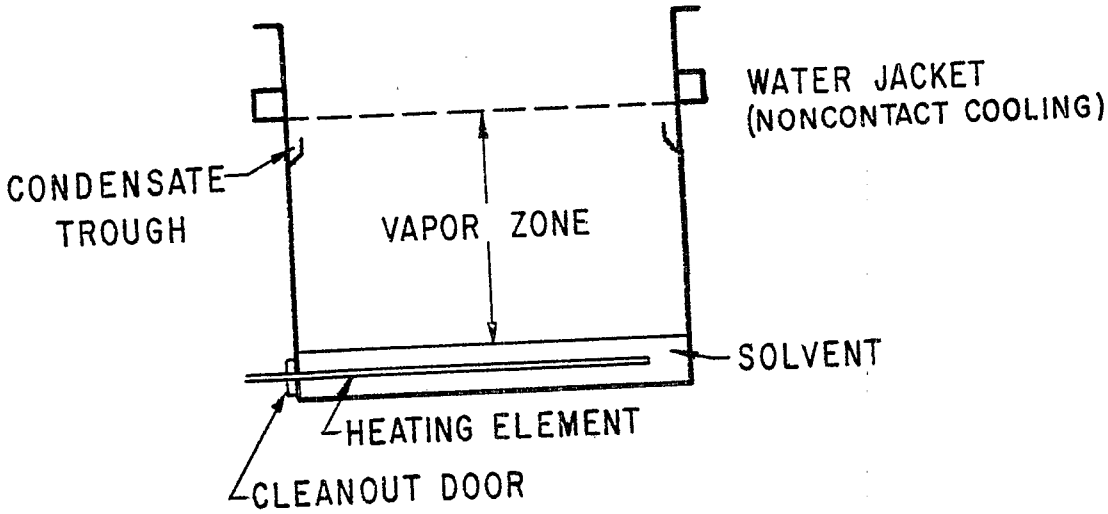

A. OPEN TOP VAPOR DEGREASER

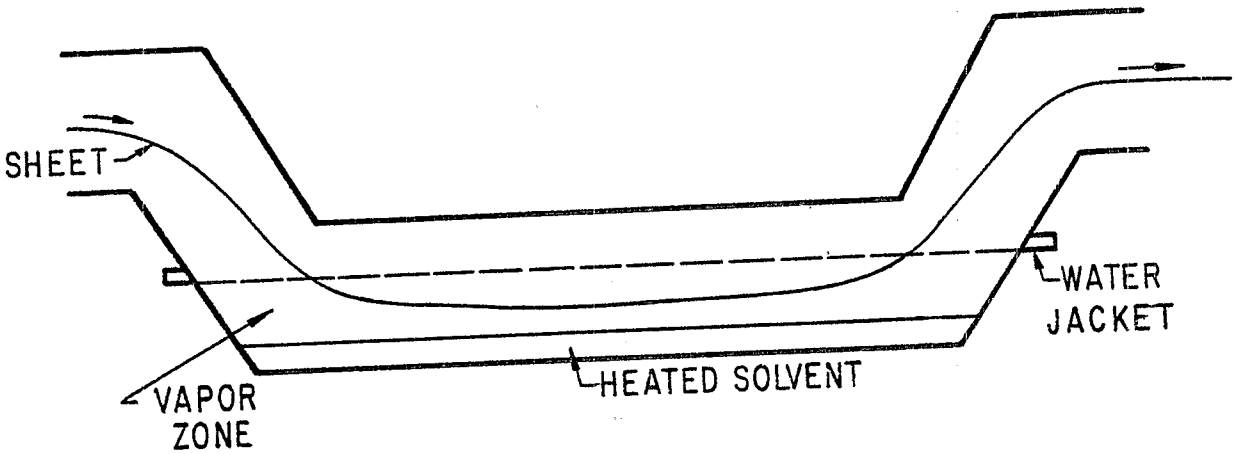

B. STRIP CONVEYORIZED DEGREASER

Figure III-25

VAPOR DEGREASING

SECTION IV

INDUSTRY SUBCATEGORIZATION

In developing regulations for the nonferrous metals forming category, the Agency considered whether different effluent limitations and standards are appropriate for different segments of the category. The regulations are technology based. If uniform regulations are to be applied to the entire category, the technology upon which they are based must be available and appropriate for every segment of the category. If not, subcategorization is required. Subcategorization is also appropriate if different pollutants are regulated in various segments of the category.

EPA considers several factors to determine the appropriate subcategorization of a category. These include plant location and nonwater quality environmental impacts, including energy costs and solid waste generation. These factors affect the availability of wastewater treatment technology. Other subcategorization factors which must be considered are raw materials, manufacturing processes, products manufactured, plant size and age, and process water use. These factors may influence water use and wastewater characteristics and thus determine the appropriateness of in-process controls, end-of-pipe wastewater treatment technologies and the presence of pollutants to be regulated.

EVALUATION AND SELECTION OF SUBCATEGORIZATION FACTORS

Factors Considered

The analysis of potential subcategorization factors was carried out in the context of developing the nonferrous metals forming category. The manufacturing activities included in the category are:

1. Forming of nonferrous metals other than copper and aluminum by rolling, drawing, extruding, and forging operations;
2. Production of ferrous and nonferrous metal powders;
3. Production of ingots and metal parts from ferrous and nonferrous metal powders; and
4. Production of clad metals and bimetallics from nonferrous metals other than copper and aluminum.

The following factors were considered as a basis for subcategorization:

1. Metal formed and raw materials used;
2. Manufacturing processes;
3. Products manufactured;
4. Process water use;
5. Plant size;
6. Plant age;
7. Plant location;
8. Solid waste generation and disposal, air emissions, and energy usage; and
9. Individual waste streams generated by manufacturing activities.

In addition to considering how the individual factors influenced subcategorization, the interrelationship between different factors was evaluated. An evaluation of these factors is presented below.

Metal Formed and Raw Materials Used. The raw materials used in the nonferrous metals forming category can be classified as follows:

- Metal and metal alloys;
- Lubricants and additives to lubricants; and
- Surface treatment, degreasing, and furnace fluxing chemicals.

The pollutants discharged from a particular forming operation depend on the metal formed and other raw materials used in that operation. For example, nickel forming wastewater will contain nickel and any lubricants or surface treatment chemicals used in forming and associated process steps. Therefore, while nickel is probably present in all nickel forming wastewater, the presence of other pollutants varies from plant to plant and operation to operation.

All of the manufacturing activities in this category, with the exception of metal cladding, can easily be divided into subcategories according to the metal formed. The metal formed and the metallurgical properties that are required in the final product will determine the other raw materials used during the forming process itself and associated process steps. The metal formed will also determine the manufacturing processes used, the products manufactured, and the amount and type of process water use.

Because the type of metal formed will have a major impact on wastewater flow and characteristics, subcategorization of manufacturing activities by the type of metal formed is appropriate.

Pollutants generated by the production of clad metals and bimetallics are dependent on the metals processed, just as are discharges from other nonferrous metals forming processes. However, because cladding involves more than one type of metal, the categorization of this forming operation in a subcategorization scheme based on the type of metal formed is not straightforward. In general, the wastewater generated by forming a clad metal product will have characteristics that are dependent on the metal that is on the surface.

Manufacturing Processes. As discussed above, there are four manufacturing activities included in the nonferrous metals forming category, each of which uses one or more distinct manufacturing processes. Subcategorization on the basis of manufacturing process would group all rolling operations, all drawing operations, all extrusion operations, etc., together. The Agency does not believe this is an appropriate basis for subcategorization because it does not adequately distinguish the type of pollutants likely to be present in waste streams from the resulting subcategories. For instance, lead is likely to be present in lead rolling wastewater but is not expected to be present in nickel rolling wastewater. Furthermore, the properties of the metal or alloy may influence the type of waste stream that is generated.

Products Manufactured. Another approach is subcategorization based on the products manufactured, as listed below:

Product	Associated Manufacturing Process
Plate	Rolling
Sheet	Rolling
Strip	Rolling
Foil	Rolling
Rod and bar	Rolling, extrusion, & drawing
Tubing	Extrusion or drawing
Wire and cable	Drawing or extrusion
Other (L shapes, I-beams, etc.)	Extrusion
Clad metals	Roll bonding, solder application, explosion bonding, co-drawing
Metal powders	Water atomization, gas atomization, grinding, etc.
Miscellaneous shapes	Forging, powder metallurgy

The product manufactured would be an excellent basis for subcategorization if waste characteristics and the process to produce a given item were the same from plant to plant; however, this is not true for many formed metal products. For example, rods can be produced by two different production processes which generate similar wastewater (e.g., rolling and drawing), but the mass of pollutants generated per unit of rod produced by rolling will be different than the amount generated by drawing the rod. Furthermore, as discussed previously, rods formed from different metals but produced by the same process may use different lubricants, therefore generating a waste with different characteristics. Because the type and mass of pollutant generated per unit of product will be different depending on the metal formed and type of forming operation employed, the type of products manufactured is an inappropriate basis for subcategorizing the nonferrous metals forming category.

Process Water Use. Major differences in water use (volume of work applied to a process per mass of product) between facilities with large and small production could be considered as a factor in the development of subcategories.

However, as will be discussed in Section V, analysis of the data indicates that production normalized water use (i.e., liters per kkg of metal formed) for a given unit operation is usually independent of production volume. For example, a large direct chill casting operation will use about the same amount of water per ton of ingot produced as an operation casting much less nonferrous metal by the same method. Production normalized water use appears to be relatively constant over a wide range of production and therefore process water use is not an appropriate parameter for subcategorization.

Plant Size. The number of employees and amount of metal processed can be used as relative measures of the size of nonferrous metals forming plants.

Process wastewaters are largely independent of the number of plant employees. Variations in staff occur for many reasons, including shift differences, clerical and administrative support, maintenance workers, efficiency of plant operations, and market fluctuations. Due to these and other factors, the number of employees is constantly fluctuating, making it difficult to develop a correlation between the number of employees and wastewater generation.

Subcategorization based on size in terms of production of nonferrous metals would group plants by the off-pounds of extrusions, sheets, rods, etc. However, this method of subcategorization does not adequately distinguish between waste streams with different characteristics.

Therefore, for the reasons discussed above, subcategorization on the basis of size (number of employees, production, or volume of wastewater generated) is not appropriate.

Plant Age. Although some nonferrous metals forming plants date from the late nineteenth and early twentieth centuries, most were built in the past 35 years. Since metal forming technologies are developing and changing rapidly, most plants, even those built 60 or 70 years ago, have been modernized frequently in order to remain competitive. Therefore, determination of a particular plant's technological age is very difficult. Accordingly, plant age is not an appropriate basis for subcategorization.

Plant Location. The geographical distribution of the nonferrous metals forming plants which responded to the dcp is presented in Figure III-1. The plants are not limited to any one geographical location, but they are generally located east of the Mississippi River. Although some cost savings may be realized for facilities located in nonurban settings where land is available to install lagoons, equivalent control of wastewater pollutant discharge can be achieved by urban plants with the use of physical and chemical treatment systems that have smaller land requirements. Since most plants are located in the eastern part of the United States (an area where precipitation exceeds evaporation) or in urban areas, evaporation and land application of the wastewater are not commonly used. Thus, location does not appear to be a significant factor on which to base subcategorization.

Solid Waste Generation and Disposal, Air Emissions and Energy Usage. Certain manufacturing plants may be limited in the wastewater treatment technology available to them by their patterns of solid waste generation and disposal, air emissions or energy usage. However, after a review of all available information, the Agency was unable to identify any plant or type of plant which has any unusual energy requirements or any unusual limitations based on available energy, solid waste disposal, or air emissions.

Individual Waste Streams Generated by Manufacturing Activities. Use of this scheme will yield subcategories of homogeneous character and treatability. The principal benefit from using waste streams as a basis for subcategorization is that an appropriate effluent limitation or standard could be established for each stream. For each regulated pollutant, a specific pollutant

mass discharge value could be calculated for each waste stream present at the facility. These values would be summed to determine the total mass discharge allowed for that pollutant at that facility.

The difficulties with this approach are the large number of subcategories - approximately 175 - that it would generate. The Agency believes that a guideline with this many subcategories would be extremely difficult to administer. However, waste stream by waste stream analysis of production, flow, and pollutants present was used to calculate pollutant mass limitations for each subcategory.

Summary of Subcategorization

The nonferrous metals forming category can be subcategorized on the basis of metal type formed. Based on information reported by 334 surveyed plants, 10 subcategories which have plants that discharge process water to surface waters or a POTW can be established. These subcategories are:

- Lead-Tin-Bismuth Forming,
- Magnesium Forming,
- Nickel-Cobalt Forming,
- Precious Metals Forming,
- Refractory Metals Forming,
- Titanium Forming,
- Uranium Forming,
- Zinc Forming,
- Zirconium-Hafnium Forming, and
- Metal Powders.

The metal powders subcategory includes only operations which involve iron, copper, or aluminum powders. Forming of these metals are included in other point source categories; iron and steel, aluminum forming, and copper forming. Nine other metals are formed, however, there is no process water discharge associated with the forming of these metals they are not discussed at any length in this document.

PRODUCTION NORMALIZING PARAMETER SELECTION

In order for regulations to be equitable among plants with high production and plants with low production, effluent limitations have been established on a pollutant mass basis, (i.e. mass of pollutant discharged per unit of production). The mass limitations must be normalized by an appropriate unit of production called a production normalizing parameter (PNP). That is, pollutant discharge limitations are written as allowable mass of pollutant discharge per PNP (mg/PNP). Therefore, for a PNP to

be appropriate, mg/PNP must be independent of both production and wastewater volume, for a particular waste stream. Mass of metal, number of pieces, surface area, and mass of process chemicals used were considered as possible PNP's. An evaluation of these alternatives follows.

Mass of Metal Processed. The nonferrous metals forming category typically maintains production records of the pounds of metal processed. Availability of these production data and lack of data for other production parameters, such as number of pieces produced, makes this the most convenient parameter to use. The nonferrous metals forming dcp requested three production values: the capacity production rate for specific unit operation (in off-lbs/hr), the average production rate for 1981 (in off-lbs/hr), and the total off-pounds of final product formed in 1981.

Number of Pieces Processed. The number of pieces processed by a given plant would not account for the variations in size and shape typical of formed products. It would be unreasonable to expect the quenching of a large forging to use the same amount of water required for a smaller forged product and yield a constant mass of pollutant per piece. Therefore, the Agency concluded that the number of pieces processed is not an appropriate PNP.

Surface Area of Metal Processed. Surface area may be an appropriate production normalizing parameter for formed metal which is rinsed (i.e., the mass of pollutants generated may correlate with surface area). However, the mass of pollutants generated by other metal forming operations, such as cooling, is unrelated to surface area. Hence, surface area might be an adequate PNP for some processes but would be wholly inappropriate for others. In addition, records of the surface area of metal processed are not generally kept by industry. In some cases, such as forging of miscellaneous shapes, surface area would be very difficult to determine. In any case, surface area data would be difficult to collect. For these reasons, the Agency concluded that surface area is an inappropriate PNP for the nonferrous metals forming category.

Mass of Process Chemicals Used. The mass of pollutants discharged is more dependent on the processes which the metal undergoes than on the amount of process chemical used in the process. Some operations, such as heat treatment with contact cooling water, generate pollutants but do not use any process chemicals. In addition, the use of this parameter as the production normalizing parameter would tend to discourage regeneration and reuse of process chemicals. For these reasons, the Agency concluded that mass of process chemicals used is an inappropriate PNP for the nonferrous metals forming category.

Selection of Production Normalizing Parameter

For the reasons outlined above, the Agency has selected mass of product formed as the most appropriate PNP. The mass of pollutants is related to the mass of metal processed and most companies keep production records in terms of mass.

The PNP for nonferrous metals forming is "off-kilograms" defined as the kilograms of product removed from a machine at the end of a process cycle. For example, in the rolling process, an ingot enters the mill to be processed. Following one process cycle which may substantially reduce the ingot's thickness, the metal is removed from the rolling mill where it may be processed through another operation, such as annealing, sizing, cleaning, or it may simply be stored before being brought back to the rolling mill for another process cycle, further reducing the thickness. The mass of metal removed from the rolling mill after each process cycle multiplied by the number of process cycles is the PNP for that process.

DESCRIPTION OF SUBCATEGORIES

The nonferrous metals forming category was divided into 10 subcategories, based on type of metal formed. Five of these subcategories cover forming operations for more than one metal. This subcategorization allows separate limitations to be established for groups of metals whose wastewater is similar, are formed by similar processes, and would be expected to utilize similar or identical wastewater treatment within the subcategory.

The metal powders subcategory covers only iron, copper, and aluminum powder production and production of iron, copper, and aluminum parts from powder. All other subcategories cover traditional forming operations (rolling, drawing, extruding, forging), powder metallurgy processes (powder production and compaction), and ancillary operations integral to the production of formed metal (heat treatment, chemical and mechanical surface treatment, and casting). Clad metals are subcategorized according to the metal on the surface or outside of the product.

The number of surveyed plants in each subcategory and the number of plants in each subcategory discharging process wastewater (directly to surface streams and to a POTW) are listed in Table IV-1.

<u>Lead-Tin-Bismuth Forming</u>. Of the surveyed plants, 66 form lead. Twenty of these plants discharge process wastewater, three directly to surface water and 17 to a POTW. Some of the products

made from lead forming are: bullets, made by extrusion and swaging lead; solder, formed by extrusion and drawing of lead, tin, and bismuth in various alloy combinations; and insulated cable, in which lead is extruded over copper cable.

The operations and associated waste streams covered by this subcategory and the appropriate production normalizing parameters are listed below.

Operation	Waste Stream	Production Normaling Parameter
Rolling	Spent emulsions	Mass of lead-tin-bismuth rolled with emulsions
	Spent soap solutions	Mass of lead-tin-bismuth rolled with soap solutions
Drawing	Spent neat oils	
	Spent emulsions	Mass of lead-tin-bismuth drawn with emulsions
	Spent soap solutions	Mass of lead-tin-bismuth drawn with soap solutions
Extrusion	Press or solution heat treatment contact cooling water	Mass of lead-tin-bismuth heat treated and subsequently cooled with water
	Press hydraulic fluid leakage	Mass of lead-tin-bismuth extruded
Swaging	Spent emulsions	Mass of lead-tin-bismuth swaged with emulsions
Casting		
Continuous Strip Casting	Contact cooling water	Mass of lead-tin-bismuth cast by the continuous strip method
Semi-Continuous Ingot Casting	Contact cooling water	Mass of lead-tin-bismuth cast by the semi-continuous method

Operation	Waste Stream	Production Normaling Parameter
Shot Casting	Contact cooling water	Mass of lead-tin bismuth shot cast
Shot-Forming	Wet air pollution control blowdown	Mass of lead-tin-bismuth shot formed
Alkaline Cleaning	Spent baths	Mass of lead-tin-bismuth alkaline cleaned
	Rinsewater	Mass of lead-tin-bismuth alkaline cleaned
Degreasing	Spent solvents	

Magnesium Forming. Magnesium forming processes consist of forging, rolling, and extrusion. Water is used in post-extrusion etching, chromating, and rinsing processes. Nine of the surveyed plants form magnesium. Three plants discharge process water, one directly to surface water and two to a POTW.

The operations and associated waste streams covered by this subcategory and the appropriate production normalizing parameters are listed below.

Operation	Waste Stream	Production Normaling Parameter
Rolling	Spent emulsions	Mass of magnesium rolled with emulsions
Forging	Spent lubricants	
	Contact cooling water	Mass of forged magnesium cooled with water
	Equipment cleaning wastewater	Mass of magnesium forged on equipment requiring cleaning with water

Operation	Waste Stream	Production Normaling Parameter
Direct Chill Casting	Contact cooling water	Mass of magnesium cast with direct chill methods
Surface Treatment	Spent baths	Mass of magnesium surface treated
	Rinsewater	Mass of magnesium surface treated
Sawing or Grinding	Spent emulsions	Mass of magnesium sawed or ground
Degreasing	Spent solvents	
Wet Air Pollution Control	Blowdown	Mass of magnesium sanded and repaired or forged

Nickel-Cobalt Forming. Nickel and cobalt are formed by rolling, drawing, extrusion, and forging, with extrusion the least common forming process. The two metals were grouped together because the metals are formed by identical processes and are frequently combined together in alloys which can be predominantly nickel or predominantly cobalt. Also, 19 of the 20 surveyed plants which form cobalt also form nickel.

Of the surveyed plants, 91 form nickel and cobalt, making this the largest subcategory in the category. Forty-eight plants discharge process wastewater, 14 directly to surface water and 34 to a POTW.

The operations and associated waste streams covered by this subcategory and the appropriate production normalizing parameters are listed below.

Operation	Waste Stream	Production Normaling Parameter
Rolling	Spent neat oils Spent emulsions	Mass of nickel-cobalt rolled with emulsions
	Contact cooling water	Mass of nickel-cobalt rolled with water
Tube Reducing	Spent lubricants	

Operation	Waste Stream	Production Normaling Parameter
Drawing	Spent neat oils Spent emulsions	Mass of nickel-cobalt drawn with emulsions
Extrusion	Spent lubricants Press or solution heat treatment contact cooling water	Mass of nickel-cobalt extruded or heat treated and subsequently cooled with water
	Press hydraulic fluid leakage	Mass of nickel-cobalt extruded
Forging	Spent lubricants Contact cooling water	Mass of forged nickel-cobalt cooled with water
	Equipment cleaning wastewater	Mass of nickel-cobalt forged on equipment requiring cleaning with water
	Press hydraulic fluid leakage	Mass of nickel-cobalt forged
Metal Powder Production	Atomization wastewater	Mass of nickel-cobalt metal powder produced by wet atomization
Stationary Casting	Contact cooling water	Mass of nickel-cobalt cast with stationary casting methods
Vacuum Melting	Steam condensate	
Annealing and Solution Heat Treatment	Contact cooling water	
Surface Treatment	Spent baths	Mass of nickel-cobalt surface treated cobalt surface treated

Operation	Waste Stream	Production Normaling Parameter
Ammonia	Rinsewater	Mass of nickel-cobalt treated with ammonia solution
Alkaline Cleaning	Spent baths	Mass of nickel-cobalt alkaline cleaned
	Rinsewater	Mass of nickel-cobalt alkaline cleaned
Molten Salt	Rinsewater	Mass of nickel-cobalt treated with molten salt
Sawing or Grinding	Spent emulsions	Mass of nickel-cobalt sawed or ground with emulsions
	Rinsewater	Mass of sawed or ground nickel-cobalt rinsed
Steam Cleaning	Condensate	Mass of nickel-cobalt steam cleaned
Hydrostatic Tube Testing and Ultrasonic Testing	Wastewater	
Dye Penetrant Testing	Wastewater	Mass of nickel-cobalt tested with dye penetrant methods
Miscellaneous Waste-Water Sources	Various	Mass of nickel cobalt formed
Degreasing	Spent solvents	
Wet Air Pollution Control	Blowdown	Mass of nickel-cobalt formed
Electrocoating	Rinsewater	Mass of nickel-cobalt electrocoated

Precious Metals Forming. This subcategory includes processes used to form gold, silver, platinum, and palladium. The Agency believes that it would be very difficult to subcategorize by the individual precious metals because most plants in this subcategory form all of the precious metals using the same equipment and cleaning operations. In addition, the metals are alloyed with each other in many combinations, some of which have no one constituent that is greater than 50 percent of the alloy. The precious metals subcategory includes any alloy of gold, platinum, palladium or silver that contains 30 percent or greater of that metal (even if another metal occurs in a larger percentage). Since all of the plants that form these alloys were already at least partially covered by the precious metals forming subcategory, this change will simplify the application of EPA regulations by regulating similar alloys formed by the same plant in the same subcategory. The additional alloys that are now included in this subcategory were previously covered by the copper forming regulation or other subcategories of the nonferrous metals forming category.

The cladding of precious metals to base metals is closely associated with precious metal forming. Typically a gold or silver overlay or inlay is roll bonded to a copper-alloy base. Nickel and stainless steel are also used as base metals. All but three of the 15 plants engaged in precious metal cladding also reported forming precious metals. The clad metals are formed by the same techniques and on the same equipment as pure metals. Therefore, it is appropriate to group precious metal cladding with precious metals forming.

The most common forming operations are rolling and drawing. Extrusion and forging are practiced to a much smaller extent. Fifty-two of the surveyed plants form precious metals. Thirty of these plants discharge process water, four directly to surface water and 26 to a POTW.

The operations and associated waste streams covered by this subcategory and the appropriate production normalizing parameters are listed below.

Operation	Waste Stream	Production Normaling Parameter
Rolling	Spent neat oils Spent emulsions	Mass of precious metals rolled with emulsions
Drawing	Spent neat oils Spent emulsions	Mass of precious metals drawn with emulsions

Operation	Waste Stream	Production Normaling Parameter
	Spent soap solutions	Mass of precious metals drawn with soap solutions
Metal Powder Production	Atomization wastewater	Mass of precious metals powder produced by wet atomization
Casting		
Direct Chill Casting	Contact cooling water	Mass of precious metals cast by the direct chill method
Shot Casting	Contact cooling water	Mass of precious metals shot cast
Stationary Casting	Contact cooling water	
Semi-Continuous and Continuous Casting	Contact cooling water	Mass of precious metals cast by the semi-continuous or continuous method
Heat Treatment	Contact cooling water	Mass of extruded precious metals heat treated
Surface Treatment	Spent baths	Mass of precious metals surface treated
	Rinsewater	Mass of precious metals surface treated
Alkaline Cleaning	Spent baths	Mass of precious metals alkaline cleaned
	Rinsewater	Mass of precious metals alkaline cleaned
Alkaline Cleaning	Prebonding wastewater	Mass of precious metal and base metal cleaned prior to bonding

Operation	Waste Stream	Production Normaling Parameter
Tumbling or Burnishing	Wastewater	Mass of precious metals tumbled or burnished with water-based media
Sawing or Grinding	Spent neat oils Spent emulsions	Mass of precious metals sawed or ground with emulsions
Pressure Bonding	Contact cooling water	Mass of precious metal and base metal pressure bonded and subsequently cooled with water
Degreasing	Spent solvents	
Wet Air Pollution Control	Blowdown	

Refractory Metals Forming. This subcategory includes processes used to form molybdenum, tungsten, vanadium, rhenium, tantalum, and columbium. The Agency believes that it is unnecessary to subcategorize by the individual refractory metals. The metals are processed and fabricated by similar methods because of their common characteristics. Most of the plants which form one refractory metal also form one or more other refractory metals and waste streams are commonly commingled. The end product of refining these metals is metal powder which is consolidated into finished products or mill shapes. Only production of metal powders using mechanical means such as milling, abrading, and atomizing, which do not significantly increase their purity are included in this subcategory. Production of refractory metal powders in operations which significantly increase their purity is included in the nonferrous metals category. The powders can be arc or electron beam melted and cast into ingots. The mill shapes and ingots are shaped into finished form by rolling, drawing, extrusion, and forging.

Fifty-eight of the surveyed plants reported forming one or more of the refractory metals. Thirty-three of these plants discharge process wastewater, six directly to surface water and 27 to a POTW.

The operations and associated waste streams covered by this subcategory and the appropriate production normalizing parameters are listed below.

Operation	Waste Stream	Production Normaling Parameter
Rolling	Spent neat oils and graphite-based lubricants	
	Spent emulsions	Mass of refractory metals rolled with emulsions
Drawing	Spent lubricants	
Extrusion	Spent lubricants	
	Press hydraulic fluid leakage	Mass of refractory metals extruded
Forging	Spent lubricants	
	Contact cooling water	Mass of forged refractory metals cooled with water
Metal Powder Production	Wastewater	Mass of refractory metals powder produced using water
Metal Powder Pressing	Spent lubricants	
Surface Treatment	Spent baths	Mass of refractory metals surface treated
	Rinsewater	Mass of refractory metals surface treated
Alkaline Cleaning	Spent baths	Mass of refractory metals alkaline cleaned
	Rinsewater	Mass of refractory metals alkaline cleaned
Molten Salt	Rinsewater	Mass of refractory metals treated with molten salt

Operation	Waste Stream	Production Normaling Parameter
Tumbling or Burnishing	Wastewater	Mass of refractory metals tumbled or burnished with water-based media
Sawing or Grinding	Spent neat oils Spent emulsions	Mass of refractory metals sawed or ground with emulsions
	Contact cooling water	Mass of refractory metals sawed or ground with contact cooling water
	Rinsewater	Mass of refractory metals sawed or ground and subsequently rinsed
Dye Penetrant Testing	Wastewater	Mass of refractory metals tested with dye penetrant methods
Equipment Cleaning	Wastewater	Mass of refractory metals formed on equipment requiring cleaning with water
Miscellaneous Wastewater Sources	Various	Mass of refractory metals formed
Degreasing	Spent solvents	
Wet Air Pollution Control	Blowdown	Mass of refractory metals sawed, ground, surface coated or surface treated

Titanium Forming. Titanium is formed by rolling, drawing, extrusion, and forging. Forging is practiced by many plants which primarily forge steel. Rolling is the second most common forming operation, drawing the least. Titanium is often acid etched to remove a hard surface layer which forms at elevated temperatures.

Forty-six of the surveyed plants form titanium. Thirty of these plants discharge process wastewater, 13 directly to surface water and 17 to a POTW.

The operations and associated waste streams covered by this subcategory and the appropriate production normalizing parameters are listed below.

Operation	Waste Stream	Production Normaling Parameter
Rolling	Spent neat oils	
	Contact cooling water	Mass of titanium rolled with contact cooling water
Drawing	Spent neat oils	
Extrusion	Spent neat oils	
	Spent emulsions	Mass of titanium extruded with emulsions
	Press hydraulic fluid leakage	Mass of titanium extruded
Forging	Spent lubricants	
	Contact cooling water	Mass of forged titanium cooled with water
	Equipment cleaning water	Mass of titanium forged on equipment requiring cleaning with water
	Press hydraulic fluid leakage	Mass of titanium forged
Tube Reducing	Spent lubricants	
Heat Treatment	Contact cooling water	
Surface Treatment	Spent baths	Mass of titanium surface treated
	Rinsewater	Mass of titanium surface treated
Alkaline Cleaning	Spent baths	Mass of titanium alkaline cleaned
	Rinsewater	Mass of titanium alkaline cleaned

Operation	Waste Stream	Production Normaling Parameter
Molten Salt	Rinsewater	Mass of titanium treated with molten salt
Tumbling	Wastewater	Mass of titanium tumbled with water-based media
Sawing or Grinding	Spent neat oils Spent emulsions	Mass of titanium sawed or ground with an emulsion
	Contact cooling water	Mass of titanium sawed or ground with contact cooling water
Dye Penetrant Testing	Wastewater	Mass of titanium tested with dye penetrant methods
Miscellaneous Wastewater Sources	Various	Mass of titanium formed
Degreasing	Spent solvents	
Wet Air Pollution Control	Blowdown	Mass of titanium surface treated or forged

Uranium Forming. Uranium forming processes consist of forging, rolling, and extrusion. Water is used in post-forming surface treatment steps. Three surveyed plants report forming uranium. Two plants discharge process wastewater directly to surface water.

The operations and associated waste streams covered by this subcategory and the appropriate production normalizing parameters are listed below.

Operation	Waste Stream	Production Normaling Parameter
Extrusion	Spent lubricants Tool contact cooling water	Mass of uranium extruded with tools requiring contact cooling with water
Forging	Spent lubricants	
Heat Treatment	Contact cooling water	Mass of extruded or forged uranium heat treated and subsequently cooled with water
Surface Treatment	Spent baths	Mass of uranium surface treated
	Rinsewater	Mass of uranium surface treated
Sawing or Grinding	Spent emulsions	Mass of uranium sawed or ground with emulsions
	Contact cooling water	Mass of uranium sawed or ground with contact cooling water
	Rinsewater	Mass of uranium sawed or ground and subsequently rinsed
Area Cleaning	Washwater	Mass of uranium formed
Degreasing	Spent solvents	
Wet Air Pollution Control	Blowdown	Mass of uranium surface treated
Drum Washwater	Wastewater	Mass of uranium formed
Laundry Washwater	Wastewater	Employee-day

Zinc Forming. Zinc is formed by rolling, drawing, and forging. It is surface treated and cleaned with alkaline detergents following forming. Ten of the surveyed plants form zinc. Three plants discharge process wastewater, one directly to surface water and two to a POTW.

The operations and associated waste streams covered by this subcategory and the appropriate production normalizing parameters are listed below.

Operation	Waste Stream	Production Normaling Parameter
Rolling	Spent neat oils Spent emulsions	Mass of zinc rolled with emulsions
	Contact cooling water	Mass of zinc rolled with contact cooling water
Drawing	Spent emulsions	Mass of zinc drawn with emulsions
Casting		
Direct Chill Casting	Contact cooling water	Mass of zinc cast by the direct chill method
Stationary Casting	Contact cooling water	
Heat Treatment	Contact cooling water	Mass of zinc heat treated and subsequently cooled with water
Surface Treatment	Spent baths	Mass of zinc surface treated
	Rinsewater	Mass of zinc surface treated

Operation	Waste Stream	Production Normaling Parameter
Alkaline Cleaning	Spent baths	Mass of zinc alkaline cleaned
	Rinsewater	Mass of zinc alkaline cleaned
Sawing or Grinding	Spent emulsions	Mass of zinc sawed or ground with emulsions
Degreasing	Spent solvents	
Electrocoating	Rinsewater	Mass of zinc electrocoated

Zirconium-Hafnium Forming. Zirconium and hafnium are formed by rolling, drawing, and extrusion. One common manufacturing process is tube reducing (roll-rocking or pilgering), a special type of cold rolling. Post-forming operations include annealing and sand blasting (dry), acid and alkaline cleaning, and conversion coating. All of the plants which form hafnium also form zirconium by similar processes.

Twelve of the surveyed plants report forming zirconium. Ten of these plants discharge process wastewater, five directly to surface water and five to a POTW.

The operations and associated waste streams covered by this subcategory and the appropriate production normalizing parameters are listed below.

Operation	Waste Stream	Production Normaling Parameter
Rolling	Spent neat oils	
Drawing	Spent lubricants	
Extrusion	Spent lubricants Press hydraulic fluid leakage	Mass of zirconium-hafnium extruded
Swaging	Spent neat oils	
Tube Reducing	Spent lubricants	

Operation	Waste Stream	Production Normaling Parameter
Heat Treatment	Contact cooling water	Mass of zirconium-hafnium heat treated and subsequently cooled with water
Surface Treatment	Spent baths	Mass of zirconium-hafnium surface treated
	Rinsewater	Mass of zirconium-hafnium surface treated
Alkaline Cleaning	Spent baths	Mass of zirconium-hafnium alkaline cleaned
	Rinsewater	Mass of zirconium-hafnium alkaline cleaned
Molten Salt	Rinsewater	Mass of zirconium-hafnium treated with molten salt
Sawing or Grinding	Spent neat oils Spent emulsions	Mass of zirconium-hafnium sawed or ground with emulsions
	Contact cooling water	Mass of zirconium-hafnium sawed or ground with contact cooling water
	Rinsewater	Mass of zirconium-hafnium sawed or ground and subsequently rinsed
Inspection and Testing	Wastewater	Mass of zirconium-hafnium tested
Degreasing	Spent solvents	
Wet Air Pollution	Blowdown Control	
Degreasing	Rinsewater	

Metal Powders. This subcategory includes operations for producing iron, copper, and aluminum powders and metal parts from iron, copper, and aluminum powders. Powders are produced by wet or dry atomization and mechanical grinding. Pressing and sintering, the major manufacturing processes in powder metallurgy, usually use no process water. Most of the wastewater from operations in this subcategory is generated by post-forming surface treatment.

Seventy-three surveyed plants are engaged in powder production or powder metallurgy of iron, copper or aluminum. Thirty of these plants discharge process wastewater, three directly to the surface water and 27 to a POTW.

The operations and associated waste streams covered by this subcategory and the appropriate production normalizing parameters are listed below.

Operation	Waste Stream	Production Normaling Parameter
Metal Powder Production	Atomization wastewater	Mass of powder produced by wet atomization
Tumbling, Burnishing or Cleaning	Wastewater	Mass of powder metallurgy parts tumbled, burnished, or cleaned with water-based media
Sawing or Grinding	Spent neat oils Spent emulsions	Mass of powder metallurgy parts sawed or ground with emulsions
	Contact cooling water	Mass of powder metallurgy parts sawed or ground with contact cooling water
Sizing	Spent neat oils Spent emulsions	Mass of powder sized using emulsions
Steam Treatment Wet Air Pollution Control	Blowdown	Mass of powder metallurgy parts steam treated
Oil-Resin Impregnation	Spent neat oils	

Operation	Waste Stream	Production Normaling Parameter
Degreasing	Spent solvents	
Hot Pressing	Contact cooling water	Mass of powder cooled with water after pressing
Mixing Wet Air Pollution Control	Blowdown	Mass of powder mixed

Table IV-1

NUMBER OF PLANTS DISCHARGING NONFERROUS METALS FORMING WASTEWATER, BY SUBCATEGORY

Subcategory	Number of Direct Dischargers*	Number of Indirect Dischargers*	Total Plants
Lead-Tin-Bismuth Forming	3	17	66
Magnesium Forming	1	2	9
Nickel-Cobalt Forming	14	34	91
Precious Metals Forming	4	26	52
Refractory Metals Forming	6	27	58
Titanium Forming	13	17	46
Uranium Forming	2	--	3
Zinc Forming	1	2	10
Zirconium-Hafnium Forming	5	5	12
Metal Powders	3	27	73

*Plants may be in more than one subcategory.

*U. S. GOVERNMENT PRINTING OFFICE 1986; 491-191/52944