United States
Environmental Protection
Agency

Office of Air Quality
Planning And Standards
Research Triangle Park, NC 27711

EPA-454/R-98-006
May 1998

AIR

EPA

LOCATING AND ESTIMATING AIR EMISSIONS FROM SOURCES OF LEAD AND LEAD COMPOUNDS

EPA-454/R-98-006

Locating And Estimating Air Emissions From Sources of Lead and Lead Compounds

Office of Air Quality Planning and Standards
Office of Air and Radiation
U.S. Environmental Protection Agency
Research Triangle Park, NC 27711

May 1998

This report has been reviewed by the Office of Air Quality Planning and Standards, U.S. Environmental Protection Agency, and has been approved for publication. Mention of trade names and commercial products does not constitute endorsement or recommendation for use.

EPA-454/R-98-006

TABLE OF CONTENTS

Section Page

LIST OF TABLES xiii

LIST OF FIGURES xviii

EXECUTIVE SUMMARY xxi

1.0 PURPOSE OF DOCUMENT 1-1

2.0 OVERVIEW OF DOCUMENT CONTENTS 2-1

3.0 BACKGROUND 3-1

3.1 PHYSICAL AND CHEMICAL NATURE OF LEAD AND LEAD COMPOUNDS 3-1
3.1.1 Organolead Compounds 3-3
3.1.2 Lead Oxides 3-10
3.1.3 Lead Sulfides 3-11
3.1.4 Lead Salts 3-11

3.2 OVERVIEW OF PRODUCTION AND USE 3-12

4.0 EMISSIONS OF LEAD AND LEAD COMPOUNDS FROM THE METALLURGICAL INDUSTRY 4-1

4.1 PRIMARY LEAD SMELTING 4-1
4.1.1 Process Description 4-2
4.1.2 Emission Control Techniques 4-4
4.1.3 Emissions 4-5

4.2 SECONDARY LEAD SMELTING 4-5
4.2.1 Source Location 4-5
4.2.2 Process Description 4-5
Reverberatory Furnaces 4-10
Blast Furnaces 4-12
Rotary Furnaces 4-15
Electric Furnaces 4-17
4.2.3 Emission Control Techniques 4-19
4.2.4 Emissions 4-20

TABLE OF CONTENTS, (CONTINUED)

Section Page

4.3 PRIMARY COPPER PRODUCTION 4-23
4.3.1 Source Description 4-23
4.3.2 Process Description 4-23
4.3.3 Emissions 4-24
4.3.4 Emission Control Techniques 4-27

4.4 SECONDARY COPPER PRODUCTION 4-31
4.4.1 Source Description 4-31
4.4.2 Process Description 4-31
4.4.3 Emission Control Techniques 4-34
4.4.4 Emissions 4-36

4.5 PRIMARY ZINC SMELTING 4-36
4.5.1 Source Description 4-36
4.5.2 Process Description 4-38
4.5.3 Emissions 4-44

4.6 SECONDARY ALUMINUM OPERATIONS 4-45
4.6.1 Source Description 4-45
4.6.2 Process Description 4-45
4.6.3 Emissions and Emission Control Techniques 4-50

4.7 IRON AND STEEL FOUNDRIES 4-52
4.7.1 Source Location 4-52
4.7.2 Process Description 4-52
Metal Melting Process 4-56
Mold and Core Production 4-57
4.7.3 Emission Control Techniques 4-57
4.7.4 Emissions 4-57

4.8 ORE MINING, CRUSHING, AND GRINDING 4-57
4.8.1 Source Description 4-57
4.8.2 Process Description 4-59
4.8.3 Emissions 4-61
4.8.4 Emission Control Techniques 4-61

4.9 BRASS AND BRONZE PROCESSING 4-61
4.9.1 Source Description 4-61
4.9.2 Process Description 4-64
4.9.3 Emissions 4-66

TABLE OF CONTENTS, (CONTINUED)

Section Page

5.0 EMISSIONS OF LEAD AND LEAD COMPOUNDS FROM COMBUSTION SOURCES 5-1

5.1 STATIONARY EXTERNAL COMBUSTION 5-1
5.1.1 Source Location 5-3
5.1.2 Residential Heating 5-4
Residential Coal Combustion 5-4
Process Description 5-4
Emissions 5-5
Residential Distillate Oil Combustion 5-5
Process Description 5-5
Emissions 5-7
Residential Natural Gas Combustion 5-7
Process Description 5-7
Emissions 5-7
5.1.3 Process Descriptions for Utility, Industrial, and Commercial Fuel Combustion 5-9
Utility Sector 5-9
Tangentially-fired Boiler 5-9
Wall-fired Boiler 5-11
Cyclone-fired Boiler 5-11
Fluidized Bed Combustion Boiler 5-11
Stoker-fired Boiler 5-14
Emission Control Techniques 5-14
Industrial/Commercial Sector 5-16
Stoker-fired Boiler 5-17
Water-tube Boilers 5-17
Fire-tube and Cast Iron Boilers 5-18
Wood Waste Boilers 5-18
Waste Oil Combustion 5-20
Coal Combustion 5-21
Emission Control Techniques 5-21
5.1.4 Emission Factors for Utility, Industrial, and Commercial Fuel Combustion 5-22
Wood Waste Combustion 5-23
Natural Gas Combustion 5-28
Coal Combustion 5-30
Oil Combustion 5-38
Solid Waste Combustion 5-38
Miscellaneous Combustion 5-38

TABLE OF CONTENTS, (CONTINUED)

Section Page

5.2 STATIONARY INTERNAL COMBUSTION SOURCES 5-44
5.2.1 Source Description 5-44
5.2.2 Emissions 5-45

5.3 MUNICIPAL WASTE INCINERATION 5-45
5.3.1 Source Location 5-45
5.3.2 Process Description 5-46
Mass Burn Combustors 5-46
RDF-Fired Combustors 5-53
Modular Combustors 5-53
Emission Control Techniques 5-56
5.3.3 Emissions 5-57

5.4 INDUSTRIAL AND COMMERCIAL WASTE INCINERATION 5-57
5.4.1 Source Location 5-57
5.4.2 Process Description 5-61
5.4.3 Emissions 5-62

5.5 SEWAGE SLUDGE INCINERATORS 5-62
5.5.1 Source Location 5-62
5.5.2 Process Description 5-63
Multiple-Hearth Furnaces 5-63
Fluidized-Bed Combustors 5-65
Emission Control Techniques 5-67
5.5.3 Emissions 5-68

5.6 MEDICAL WASTE INCINERATION 5-68
5.6.1 Source Location 5-71
5.6.2 Process Description 5-71
Controlled-Air Incinerators 5-71
Excess-Air Incinerators 5-73
Rotary Kiln Incinerators 5-75
Emission Control Techniques 5-77
Combustion Control 5-78
APCD Control 5-78
5.6.3 Emissions 5-78

5.7 HAZARDOUS WASTE INCINERATION 5-82
5.7.1 Source Location 5-83
5.7.2 Process Description 5-83
Liquid Injection Incinerators 5-85

TABLE OF CONTENTS, (CONTINUED)

Section Page

Rotary Kiln Incinerators 5-85
Fixed-Hearth Incinerators 5-88
Fluidized-Bed Incinerators 5-88
Fume Injection Incinerators 5-90
Emission Control Techniques 5-90
5.7.3 Emissions 5-91

5.8 DRUM AND BARREL RECLAMATION 5-91
5.8.1 Source Location 5-91
5.8.2 Process Description 5-91
5.8.3 Emissions 5-92

5.9 SCRAP TIRE INCINERATION 5-92
5.9.1 Source Location 5-92
5.9.2 Process Description 5-94
5.9.3 Emissions 5-95

5.10 OPEN BURNING OF SCRAP TIRES 5-95
5.10.1 Source Location 5-95
5.10.2 Process Description 5-95
5.10.3 Emissions 5-96

5.11 CREMATORIES 5-96
5.11.1 Source Location 5-96
5.11.2 Process Description 5-96
5.11.3 Emissions 5-99

5.12 PULP AND PAPER INDUSTRY 5-99
5.12.1 Kraft Recovery Furnaces and Smelt Dissolving Tanks 5-101
Source Location 5-101
Process Description 5-101
Emissions 5-107
5.12.2 Lime Kilns 5-108
Source Location 5-108
Process Description 5-108
Emissions 5-111
5.12.3 Sulfite Recovery Furnaces 5-111
Source Location 5-111
Process Description 5-111
Emissions 5-115

TABLE OF CONTENTS, (CONTINUED)

Section Page

5.13 PORTLAND CEMENT MANUFACTURING 5-115
5.13.1 Source Location 5-115
5.13.2 Process Description 5-117
5.13.3 Emission Control Techniques 5-125
5.13.4 Emissions 5-126

6.0 EMISSIONS OF LEAD AND LEAD COMPOUNDS FROM OTHER SOURCES 6-1

6.1 PRESSED AND BLOWN GLASS 6-1
6.1.1 Source Description 6-1
6.1.2 Process Description 6-2
6.1.3 Emissions 6-5

6.2 LEAD-ACID BATTERY PRODUCTION 6-7
6.2.1 Source Description 6-7
6.2.2 Process Description 6-8
6.2.3 Emissions 6-14

6.3 LEAD OXIDES IN PIGMENTS 6-17
6.3.1 Source Location 6-17
6.3.2 Process Description 6-17
Lead Oxides 6-17
Lead Monoxide 6-17
Black Oxides 6-20
Lead Dioxide 6-20
Lead Pigments 6-23
Red Lead 6-23
White Lead 6-23
Lead Chromate 6-23
Leaded Zinc Oxides 6-23
6.3.3 Emissions 6-24
Lead Oxides 6-24
Lead Pigments 6-24
Red Lead 6-24

6.4 LEAD CABLE COATING 6-25
6.4.1 Source Description 6-25
6.4.2 Process Description 6-27
6.4.3 Emissions 6-28

6.5 FRIT MANUFACTURING 6-30

TABLE OF CONTENTS, (CONTINUED)

Section Page

6.5.1 Process Description 6-30
6.5.2 Emissions 6-31

6.6 CERAMICS AND GLAZES 6-33
6.6.1 Process Description 6-37
6.6.2 Emissions 6-38
6.6.3 Piezoelectric Ceramics 6-38
Process Description 6-41
Emissions 6-41

6.7 MISCELLANEOUS LEAD PRODUCTS 6-41
6.7.1 Ammunition 6-43
Emissions 6-43
6.7.2 Type Metal Production 6-43
Process Description 6-45
Emissions 6-45
6.7.3 Other Metallic Lead Products 6-46
Process Description 6-46
Emissions 6-47
6.7.4 Abrasive Grain Processing 6-47
Process Description 6-47
Emissions 6-50

6.8 SOLDER MANUFACTURING 6-51
6.8.1 Source Description 6-51
6.8.2 Process Description 6-51
6.8.3 Emissions 6-52

6.9 ELECTROPLATING (INCLUDING PRINTED CIRCUIT BOARDS) 6-53
6.9.1 Source Description 6-53
6.9.2 Process Description 6-53
6.9.3 Emissions 6-58

6.10 STABILIZERS IN RESINS 6-58
6.10.1 Process Description 6-60
6.10.2 Emissions 6-64

6.11 ASPHALT CONCRETE 6-64
6.11.1 Source Location 6-64

TABLE OF CONTENTS, (CONTINUED)

Section Page

6.11.2 Process Description 6-65
Emission Control Techniques 6-71
6.11.3 Emissions 6-72

6.12 APPLICATION OF PAINTS 6-72
6.12.1 Source Description 6-74
Automotive Industry and Automobile Refinishing 6-74
Industrial Applications 6-75
Machinery Finishes/Traffic Paints 6-75
Artists Paints 6-75
Marine Coatings 6-75
6.12.2 Process Description 6-76
6.12.3 Emissions 6-77

6.13 SHOOTING RANGES AND EXPLOSIVE ORDINANCE DISPOSAL SITES 6-77
6.13.1 Source Description 6-77
6.13.2 Emissions 6-78

6.14 RUBBER PRODUCTS 6-80
6.14.1 Process Description 6-81
6.14.2 Emissions 6-83

7.0 EMISSIONS OF LEAD AND LEAD COMPOUNDS FROM MOBILE SOURCES 7-1

7.1 GENERAL 7-1
7.1.1 Leaded Fuels 7-2
7.1.2 Unleaded Fuels 7-6

7.2 EVAPORATIVE EMISSIONS FROM FUEL DISTRIBUTION FOR MOBILE SOURCES 7-6

7.3 COMBUSTION EMISSIONS 7-8

7.4 ROAD DUST 7-9
7.4.1 Paved Roads 7-9
7.4.2 Unpaved Roads 7-11

8.0 SOURCE TEST PROCEDURES 8-1

8.1 AMBIENT AIR SAMPLING METHODS 8-1

TABLE OF CONTENTS, (CONTINUED)

Section Page

8.2 STATIONARY SOURCE SAMPLING METHODS 8-5
8.2.1 EPA Method 12 - Methodology for the Determination of Metals Emissions in Exhaust Gases from Hazardous Waste Incineration and Similar Combustion Sources 8-5
8.2.2 EPA Draft Method 29 - Determination of Metals Emissions from Stationary Sources 8-7

8.3 ANALYTICAL TECHNIQUES FOR THE MEASUREMENT OF LEAD 8-9
8.3.1 Direct Aspiration (Flame) Atomic Absorption Spectroscopy 8-9
8.3.2 Graphite Furnace Atomic Absorption Spectroscopy 8-10
8.3.3 Inductively Coupled Plasma Atomic Emission Spectroscopy 8-10

9.0 REFERENCES 9-1

APPENDICES

Appendix A - Emission Factor Summary Table A-1

LIST OF TABLES

Table		Page
3-1	Physical Properties of Lead	3-2
3-2	Physical Properties of the Principal Lead-Ore Compounds	3-3
3-3	Uses of Lead Alloys	3-4
3-4	Lead Compounds	3-6
4-1	Domestic Primary Lead Smelters and Refineries	4-1
4-2	Lead Emission Factors for Primary Lead Smelting Facilities	4-6
4-3	U.S. Secondary Lead Smelters Grouped According to Annual Lead Production Capacity	4-7
4-4	Lead Emission Factors for Secondary Lead Smelting	4-21
4-5	Lead Emission Factors for Primary Copper Smelting Facilities	4-28
4-6	Chemical Characteristics of Fugitive Particulate Emissions from Various Sources at Primary Copper Smelters	4-30
4-7	Domestic Secondary Copper Producers	4-32
4-8	Lead Emission Factors for Secondary Copper Smelting Facilities	4-37
4-9	Domestic Primary Zinc Producers	4-38
4-10	Lead Emission Factors for Secondary Aluminum Production	4-51
4-11	Lead Emission Factors for Iron and Steel Foundries	4-58
4-12	Lead Emission Factors for Leadbearing Ore Crushing and Grinding	4-62
4-13	Emission Sources and Control Devices	4-63
4-14	Characteristics of Uncontrolled Exhaust Gas from a Brass and Bronze Reverberatory Furnace	4-67
4-15	Brass and Bronze Production and Lead Emissions in 1992	4-67
5-1	Lead Emission Factors for Residential Coal Combustion	5-6

LIST OF TABLES, (CONTINUED)

Table Page

5-2 Emission Factors for Residential Distillate Oil-fired Furnaces 5-8

5-3 Lead Emission Factors for Wood Waste-fired Utility Boilers 5-24

5-4 Lead Emission Factors for Wood Waste-fired Industrial Boilers 5-25

5-5 Lead Emission Factors for Wood Waste-fired Commercial/Institutional Boilers . . . 5-27

5-6 Lead Emission Factors for Natural Gas-fired Utility Boilers from AP-42 5-29

5-7 Lead Emission Factors for Natural Gas-fired Utility Boilers from Utility Study 5-29

5-8 Lead Emission Factors for Coal-fired Utility Boilers 5-31

5-9 Lead Emission Factors for Coal-fired Utility Boilers from Utility Study 5-33

5-10 Lead Emission Factors for Coal-fired Industrial Boilers 5-34

5-11 Lead Emission Factors for Coal-fired Commercial/Institutional Boilers 5-36

5-12 Lead Emission Factors for Oil-fired Utility Boilers 5-39

5-13 Lead Emission Factors for Oil-fired Utility Boilers from Utility Study 5-40

5-14 Lead Emission Factors for Oil-fired Industrial Boilers 5-40

5-15 Lead Emission Factors for Oil-fired Commercial/Institutional Boilers 5-41

5-16 Lead Emission Factors for Waste Oil-fired Industrial Boilers 5-41

5-17 Lead Emission Factors for Waste Oil-fired Commercial/Institutional Boilers 5-42

5-18 Lead Emission Factors for Solid Waste-fired Utility Boilers 5-43

5-19 Lead Emission Factors for Miscellaneous Industrial Boilers 5-43

5-20 Summary of Geographical Distribution of MWC Facilities 5-47

5-21 Lead Emission Factors for Municipal Waste Combustion Sources 5-58

LIST OF TABLES, (CONTINUED)

Table Page

5-22 Lead Emission Factors for Sewage Sludge Incinerator Sources 5-69

5-23 Lead Emission Factors for Medical Waste Combustion Sources 5-79

5-24 Lead Emission Factors for Drum And Barrel Reclamation Sources 5-93

5-25 Lead Emission Factors for Open Burning Of Scrap Tires 5-97

5-26 1991 U.S. Crematory Locations by State 5-98

5-27 Lead Emission Factor for Crematories 5-100

5-28 Distribution of Kraft Pulp Mills in the United States (1997) 5-102

5-29 Lead Emission Factors for Kraft Process Recovery Furnaces and Smelt Dissolving Tanks 5-109

5-30 Lead Emission Factors for Lime Kilns 5-112

5-31 Distribution of Sulfite Pulp Mills in the United States (1997) 5-113

5-32 Lead Emission Factors for Sulfite Process Recovery Furnaces 5-116

5-33 Portland Cement Production Facilities 5-118

5-34 Lead Emission Factors for Portland Cement Manufacturing Facilities 5-127

6-1 Glass Manufacturers (SIC 3229) in the United States Reporting Lead and Lead Compound Emissions Under SARA 313 6-3

6-2 Lead Emission Factor for Glass Manufacturing 6-7

6-3 Lead-Acid Battery Production Facilities 6-9

6-4 Lead Emission Factors for Lead-acid Battery Production 6-16

6-5 U.S. Facilities Manufacturing Lead Oxides in Pigments 6-18

6-6 Characteristics of Uncontrolled Exhaust Gas from Lead Oxide Ball Mill and Barton Pot Processes 6-25

6-7 Performance Test Results on Baghouses Serving Lead Oxide Facilities 6-26

LIST OF TABLES, (CONTINUED)

Table		Page
6-8	Lead Emission Factors for Manufacture of Lead Oxide in Pigments	6-27
6-9	Lead Emission Factor for Lead Cable Coating	6-29
6-10	Manufacturers of Ceramicware	6-35
6-11	Decorative Ceramic Tile Manufacturers	6-36
6-12	Manufacturers of Enamels for Stove and Range Use	6-37
6-13	Lead Emission Factor for Ceramic/Glaze Application	6-39
6-14	Manufacturers of Lead Zirconate Titanate (PZT) and Manufacturers of Piezoelectronics	6-40
6-15	Lead Emission Factors for Miscellaneous Lead Products	6-44
6-16	Lead Emission Factor for Type Metal Production	6-46
6-17	Lead Emission Factor for Solder Manufacturing Facilities	6-53
6-18	Lead Electroplating Manufacturers	6-54
6-19	Manufacturers of Heat Stabilizers Containing Lead	6-60
6-20	Manufacturers of Resins and Plastics Reporting Lead and Lead Compound Emissions in the 1992 Toxic Chemicals Release Inventory	6-61
6-21	Polyvinyl Chloride Manufacturers in the United States	6-63
6-22	Lead Emission Factors for Batch-Mix Hot-Mix Asphalt Plants	6-73
6-23	Lead Emission Factor for Drum-Mix Hot-Mix Asphalt Plants	6-74
6-24	Uncontrolled Lead Emission Factors for EOD Activities	6-79
6-25	End Uses of Rubber that may Contain Lead	6-81
6-26	Rubber Product Manufacturing Facilities in the United States Reporting Lead And Lead Compound Emissions in 1992 Under SARA 313	6-82
7-1	Lead Content Of Motor Vehicle Fuels	7-3

LIST OF TABLES, (CONTINUED)

Table		Page
7-2	Fuel Sales	7-4
7-3	Composition and Properties of TEL and TML	7-5
7-4	Industrial Paved Road Silt Loadings	7-10
7-5	Typical Values for Paved Road Industrial Augmentation Factor (I)	7-11
7-6	Typical Silt Content Values of Surface Material on Industrial and Rural Unpaved Roads	7-13
A-1	Summary of Emission Factors by Source Classification Codes	A-1

LIST OF FIGURES

Figure		Page
3-1	Consumption of Lead in the United States in 1992	3-14
4-1	Typical Primary Lead-Processing Scheme	4-3
4-2	Simplified Process Flow Diagram for Secondary Lead Smelting	4-9
4-3	Cross-Sectional View of a Typical Stationary Reverberatory Furnace	4-11
4-4	Cross-Section of a Typical Blast Furnace	4-13
4-5	Side View of a Typical Rotary Reverberatory Furnace	4-16
4-6	Cross-Sectional View of an Electric Furnace for Processing Slag	4-18
4-7	Typical Primary Copper Smelter Flowsheet	4-25
4-8	Copper Converter	4-26
4-9	Fugitive Emission Sources at Primary Copper Smelters	4-29
4-10	Secondary Copper Smelting Processes	4-33
4-11	Electrolytic Primary Zinc-Smelting Process	4-39
4-12	Pyrometallurgical Primary Zinc-Smelting Process	4-43
4-13	Typical Process Diagram for Pretreatment in the Secondary Aluminum Processing Industry	4-46
4-14	Typical Process Flow Diagram for the Secondary Aluminum Processing Industry	4-47
4-15	Process Flow Diagram for a Typical Sand-Cast Iron and Steel Foundry	4-54
4-16	Emission Points in a Typical Iron and Steel Foundry	4-55
4-17	Process Diagram for Ore Mining and Crushing	4-60
4-18	Brass and Bronze Alloys Production Processes	4-65
5-1	Simplified Boiler Schematic	5-10
5-2	Single Wall-fired Boiler	5-12

LIST OF FIGURES, (CONTINUED)

Figure Page

5-3 Simplified Atmospheric Fluidized Bed Combustor Process Flow Diagram 5-13

5-4 Spreader Type Stoker-fired Boiler 5-15

5-5 Typical Mass Burn Waterwall Combustor 5-50

5-6 Simplified Process Flow Diagram, Gas Cycle for a Mass Burn/Rotary Waterwall Combustor 5-51

5-7 Mass Burn Refractory-Wall Combustor with Grate/Rotary Kiln 5-52

5-8 Typical RDF-Fired Spreader Stoker Boiler 5-54

5-9 Typical Modular Starved-Air Combustor with Transfer Rams 5-55

5-10 Typical Multiple-Hearth Furnace 5-64

5-11 Fluidized-Bed Combustor 5-66

5-12 Controlled-Air Incinerator 5-72

5-13 Excess-Air Incinerator 5-74

5-14 Rotary Kiln Incinerator 5-76

5-15 Typical Process Component Options in a Hazardous Waste Incineration Facility . . . 5-84

5-16 Typical Liquid Injection Combustion Chamber 5-86

5-17 Typical Rotary Kiln/Afterburner Combustion Chamber 5-87

5-18 Typical Fixed-Hearth Combustion Chamber 5-89

5-19 Typical Kraft Pulping and Recovery Process 5-103

5-20 Direct Contact Evaporator Recovery Boiler 5-105

5-21 Non-direct Contact Evaporator Recovery Boiler 5-106

5-22 Process Flow Diagram for Lime Kiln 5-110

LIST OF FIGURES, (CONTINUED)

Figure		Page
5-23	Process Diagram for Magnesium-Based Sulfite Pulping and Chemical Recovery	5-114
5-24	Process Flow Diagram of Portland Cement Manufacturing Process	5-123
6-1	Glass Manufacturing Process	6-4
6-2	Process Flow Diagram for Lead-Acid Battery Production	6-12
6-3	Barton Pot Process for Lead Oxide Manufacture	6-21
6-4	Ball Mill Process for Lead Oxide Manufacture	6-22
6-5	Process Flow Diagram for Frit Manufacturing	6-32
6-6	Multilayer Ceramic Capacitor Manufacturing Process	6-42
6-7	Flow Diagram for Abrasive Grain Processes	6-49
6-8	General Electroplating Process Flow Diagram	6-55
6-9	General Process Flow Diagram for Batch-Mix Asphalt Paving Plants	6-67
6-10	General Process Flow Diagram for Drum-Mix Asphalt Paving Plants	6-69
6-11	General Process Flow Diagram for Counterflow Drum-Mix Asphalt Paving Plants	6-70
8-1	Components of a High-Volume Ambient Air Sampler for Lead	8-2
8-2	Air Flow through a High-Volume Sampler in a Shelter	8-4
8-3	Method 12 Sampling Train	8-6
8-4	Method 29 Sampling Train	8-8

EXECUTIVE SUMMARY

The 1990 Clean Air Act Amendments contain a list of 188 hazardous air pollutants (HAPs) which the U.S. Environmental Protection Agency (EPA) must study, identify sources of, and determine if regulations are warranted.[a] Of these HAPs, lead and lead compounds are the subject of this document. This document describes the properties of lead and lead compounds as air pollutants, defines their production and use patterns, identifies source categories of air emissions, and provides lead emission factors. The document is a part of an ongoing EPA series designed to assist the general public at large, but primarily federal, state, and local air agencies, in identifying sources of HAPs and developing emissions estimates.

Lead is primarily used in the manufacture of lead-acid batteries, lead alloys, lead oxides in pigments, glass, lead cable coating, and a variety of lead products including ammunition and radiation shielding. Lead is emitted into the atmosphere from mining and smelting; from its use as a feedstock in the production of lead alloys, lead compounds and other lead-containing products; from mobile sources; and from combustion sources.

In addition to the lead and lead compound sources and emission factor data, information is provided that specifies how individual sources of lead and lead compounds may be tested to quantify air emissions.

[a] Caprolactam was delisted from the list of HAPs (Federal Register Volume 61, page 30816, June 18, 1996).

SECTION 1.0
PURPOSE OF DOCUMENT

The Environmental Protection Agency (EPA) and state and local air pollution control agencies are becoming increasingly aware of the presence of substances in the ambient air that may be toxic at certain concentrations. This awareness has led to attempts to identify source/receptor relationships for these substances and to develop control programs to regulate toxic emissions.

To assist groups interested in inventorying air emissions of various potentially toxic substances, EPA is preparing a series of documents that compiles available information on sources and emissions. Existing documents in the series are listed below.

Substance or Source Category	EPA Publication Number
Acrylonitrile	EPA-450/4-84-007a
Arsenic	EPA-454/R-98-011
Benzene	EPA-450/4-84-007q
1,3-Butadiene	EPA-454/R-96-008
Cadmium	EPA-454/R-93-040
Carbon Tetrachloride	EPA-450/4-84-007b
Chlorobenzenes (revised)	EPA-454/R-93-044
Chloroform	EPA-450/4-84-007c
Chromium	EPA-450/4-84-007g
Chromium (supplement)	EPA-450/2-89-002

Substance or Source Category	EPA Publication Number
Coal and Oil Combustion Sources	EPA-450/2-89-001
Cyanide Compounds	EPA-454/R-93-041
Dioxins and Furans	EPA-454/R-97-003
Epichlorohydrin	EPA-450/4-84-007j
Ethylene Oxide	EPA-450/4-84-007l
Ethylene Dichloride	EPA-450/4-84-007d
Formaldehyde	EPA-450/2-91-012
Lead	EPA-454/R-98-006
Manganese	EPA-450/4-84-007h
Medical Waste Incinerators	EPA-454/R-93-053
Mercury and Mercury Compounds	EPA-453/R-93-023
Methyl Chloroform	EPA-454/R-93-045
Methyl Ethyl Ketone	EPA-454/R-93-046
Methylene Chloride	EPA-454/R-93-006
Municipal Waste Combustors	EPA-450/2-89-006
Nickel	EPA-450/4-84-007f
Organic Liquid Storage Tanks	EPA-450/4-88-004
Perchloroethylene and Trichloroethylene	EPA-450/2-90-013
Phosgene	EPA-450/4-84-007i
Polychlorinated Biphenyls (PCB)	EPA-450/4-84-007n
Polycyclic Organic Matter (POM)	EPA-450/4-84-007p
Sewage Sludge Incineration	EPA-450/2-90-009
Styrene	EPA-454/R-93-011
Toluene	EPA-454/R-93-047
Vinylidene Chloride	EPA-450/4-84-007k
Xylenes	EPA-454/R-93-048

This document deals specifically with lead and lead compounds. Its intended audience includes federal, state and local air pollution personnel and others who are interested in locating potential emitters of lead and lead compounds and making gross emissions estimates.

The reader is strongly cautioned against using the emissions information contained in this document to try to develop an exact assessment of emissions from any particular facility. This document is intended to be used as a tool to assist in inventorying lead air emissions from source categories, rather than specific facilities. Available data are insufficient to develop statistical estimates of the accuracy of these emission factors, so no estimate can be made of the error that could result when these factors are used to calculate emissions from any given facility. The public's misinterpretation of these figures can lead to a gross exaggeration of lead air emissions. It is possible, in some cases, that order-of-magnitude differences could result between actual and calculated emissions, depending on differences in source configurations, control equipment, and operating practices.[1] Thus, in situations where an accurate assessment of lead emissions is necessary, source-specific information should be obtained to confirm the existence of particular emitting operations, the types and effectiveness of control measures, and the impact of operating practices. A source test should be considered as the best means to determine air emissions directly from a facility or operation.

A national ambient air quality standard (NAAQS) for lead of 1.5 micrograms per cubic meter ($\mu g/m^3$) averaged over a calendar quarter was established in 1978. The EPA used health effects criteria as the basis for arriving at this level for the NAAQS. As such, a large amount of health-related information does exist in available literature for lead.

Since establishing the NAAQS for lead in 1978, EPA has periodically reviewed the standard, again focusing on the health effects of lead. Although the NAAQS limit has remained unchanged at 1.5 $\mu g/m^3$, evaluation of the standard is ongoing at EPA, generating additional health-related and ambient air concentration data. However, data collected through ambient air studies do not reveal specific lead emission contributions from individual sources, which is the focus of this document.

With the 1990 Amendments to the CAA, lead and lead compounds were both recognized for their toxic characteristics and included on the list of hazardous air pollutants

(HAPs) presented in Section 112(d) to be evaluated in the development of maximum achievable control technology (MACT) standards. In addition, many states also recognize lead and lead compounds as toxic pollutants, and some states may impose their own regulations, which can be more stringent than federal standards. For example, under the state of California's air toxic identification and control program, the California Air Resources Board (CARB) is proposing to identify inorganic lead as a toxic air contaminant. The identification or risk assessment process includes assessing the exposure and health effects of toxic air contaminants. Once a toxic air contaminant is identified by the Board, it enters into the control or risk management phase of the program. In this phase, the need for an appropriate degree of controls is evaluated with full public participation.[2]

Lead air emissions have also been affected by regulatory activity from other agencies, including: the Occupational Safety and Health Administration (OSHA), which has enacted regulations for reducing lead exposure to a variety of worker categories; the U.S. Consumer Product Safety Commission, which has prohibited lead paints on toys and furniture; the Food and Drug Administration (FDA) has guidelines for levels of lead that can leach out of ceramics; and the Toxic Substances Control Act (TSCA) which proposed reducing lead in the manufacture of certain products, such as fishing sinkers.

The MACT standards development program at the Office of Air Quality Planning and Standards (OAQPS) has served as a means of providing source-specific information on lead and lead compound emissions. A concerted effort was made during the development of this document to coordinate with the work underway at OAQPS. Data were available through this program for the metallurgical industry, which is a significant emitter of lead. However, many of the MACT standards were in the preliminary stages (e.g., secondary aluminum, iron and steel foundries), and emissions information was not available.

As a result of California's “Hot Spots” source testing program and other state source testing efforts, data were available for incorporation into this document. Information and

test data from these reports are maintained in EPA's Source Test Information Retrieval System (STIRS) database and the Factor Information Retrieval (FIRE) System.[3,4] However, despite the data generated by these programs, the available data on some potential sources of lead emissions are limited and the configurations of many sources will not be the same as those described in this document. Therefore, this document is best used as a primer to inform air pollution personnel about the following: (1) the types of sources that may emit lead, (2) process variations that may be expected within these sources affecting emissions, and (3) available emissions information that indicates the potential for lead to be released into the air from each operation. This document does not contain any discussion of health or other environmental effects of lead, nor does it include any discussion of ambient air levels.

As standard procedure, L&E documents are sent to government, industry, and environmental groups wherever EPA is aware of expertise. These groups are given the opportunity to review a document, comment, and provide additional data, where applicable. Although this document has undergone extensive review, there may still be shortcomings. Comments subsequent to publication are welcome and will be addressed based on available time and resources. In addition, any comments on the contents or usefulness of this document are welcome, as is any information on process descriptions, operating practices, control measures, and emissions information that would enable EPA to update and improve the document's contents. All comments should be sent to:

Group Leader
Emission Factor and Inventory Group (MD-14)
Office of Air Quality Planning and Standards
U. S. Environmental Protection Agency
Research Triangle Park, North Carolina 27711

SECTION 2.0
OVERVIEW OF DOCUMENT CONTENTS

This section briefly outlines the nature, extent, and format of the material presented in the remaining sections of this report.

Section 3.0 provides a brief summary of the physical and chemical characteristics of lead and lead compounds and an overview of its production, uses, and emission sources. This background section is useful in developing a general perspective on lead, how it is manufactured and consumed, and identifies potential sources of lead emissions.

Section 4.0 focuses on air emissions of lead from the metallurgical industry. For each major production source category described in Section 4.0, a list of individual companies identified in that particular industry is provided, where available. An example process description and a flow diagram with potential lead emission points are given. Emission factors for potential lead emissions, before and after controls employed by industry, are given where available.

Section 5.0 describes various combustion source categories where lead emissions have been reported. For each type of combustion source, a description(s) of the combustor is given and potential lead emission points are identified on diagrams. Emission factors for potential lead emissions, before and after controls, are given where available.

Section 6.0 summarizes other source categories that use and potentially emit lead. The manufacture of lead-acid batteries is discussed in this section. The majority of the other source categories discussed use lead as an additive in various products such as glass, paint,

pigments, glazes, solders, and stabilizers. Limited information on many of these sources is available; therefore, varying levels of detail on the processes, emissions, and controls are presented. Locations of facilities in each source category are provided, where available.

Section 7.0 discusses lead emissions from mobile sources. Both on-road and off-road sources, as well as aircraft are addressed. This section also includes a discussion of emissions from lead deposited in soil by mobile sources and reentrained in road dust.

Section 8.0 summarizes available procedures for source sampling, ambient air monitoring, and analysis of lead. This section provides an overview of applicable sampling procedures and cites references for those interested in conducting source tests. References for the entire document are listed in Section 9.0.

Appendix A presents a summary table of the emission factors contained in this document. This table also presents the factor quality rating and the Source Classification Code (SCC) or Area/Mobile Source (AMS) code associated with each emission factor.

Each emission factor listed in Sections 4.0 through 7.0 was assigned an emission factor rating (A, B, C, D, E, or U) based on the criteria for assigning data quality ratings and emission factor ratings as required in the document *Procedures for Preparing Emission Factor Documents*.[5] The criteria for assigning the data quality ratings to source tests are as follows:

A - Tests are performed by using an EPA reference test method, or when not applicable, a sound methodology. Tests are reported in enough detail for adequate validation, and, raw data are provided that can be used to duplicate the emission results presented in the report.

B - Tests are performed by a generally sound methodology, but lacking enough detail for adequate validation. Data are insufficient to completely duplicate the emission result presented in the report.

C - Tests are based on an unproven or new methodology, or are lacking a significant amount of background information.

D - Tests are based on generally unacceptable method, but the method may provide an order-of-magnitude value for the source.

Once the data quality ratings for the source tests had been assigned, these ratings along with the number of source tests available for a given emission point were evaluated. Because of the almost impossible task of assigning a meaningful confidence limit to industry-specific variables (e.g., sample size vs. sample population, industry and facility variability, method of measurement), the use of a statistical confidence interval for establishing a representative emission factor for each source category was not practical. Therefore, some subjective quality rating was necessary. The following quality ratings were used in the emission factor tables in this document:

A - Excellent. Emission factor is developed primarily from A- and B-rated source test data taken from many randomly chosen facilities in the industry population. The source category population is sufficiently specific to minimize variability.

B - Above average. Emission factor is developed primarily from A- or B-rated test data from a moderate number of facilities. Although no specific bias is evident, it is not clear if the facilities tested represent a random sample of the industry. As with the A rating, the source category population is sufficiently specific to minimize variability.

C - Average. Emission factor is developed primarily from A-, B-, and C-rated test data from a reasonable number of facilities. Although no specific bias is evident, it is not clear if the facilities tested represent a random sample of the industry. As with the A rating, the source category population is sufficiently specific to minimize variability.

D - Below average. Emission factor is developed primarily form A-, B-, and C-rated test data from a small number of facilities, and there may be reason to suspect that these facilities do not represent a random sample of the industry. There also may be evidence of variability within the source population.

E - Poor. Factor is developed from C- rated and D-rated test data from a very few number of facilities, and there may be reasons to suspect that the facilities tested do not represent a random sample of the industry. There also may be evidence of variability within the source category population.

U - Unrated (Only used in the L&E documents). Emission factor is developed from source tests which have not been thoroughly evaluated, research papers, modeling data, or other sources that may lack supporting documentation. The data are not necessarily "poor," but there is not enough information to rate the factors according to the rating protocol.

SECTION 3.0
BACKGROUND

3.1 PHYSICAL AND CHEMICAL NATURE OF LEAD AND LEAD COMPOUNDS

Pure lead is a silvery-white metal that oxidizes and turns bluish-gray when exposed to air. It is soft enough to be scratched with a fingernail. It is dense, malleable, and readily fusible.[6] Its properties include a low melting point; ease of casting; high density; low strength; ease of fabrication; acid resistance; electrochemical reaction with sulfuric acid; chemical stability in air, water, and earth; and the ability to attenuate sound waves, atomic radiation and mechanical vibration.[7] The physical properties of lead are presented in Table 3-1.

Lead in its elemental or pure form rarely occurs in nature. Lead most commonly occurs as the mineral galena (lead sulfide [PbS]), and is sometimes found in other mineral forms, which are of lesser commercial importance, such as anglesite ($PbSO_4$) and cerussite ($PbCO_3$).[6] Table 3-2 presents properties of these three mineral compounds.

Lead is hardened by alloying it with small amounts of arsenic, copper, antimony, or other metals.[6] These alloys are frequently used in manufacturing various lead-containing products. A list of typical end uses for lead alloys is given in Table 3-3.

TABLE 3-1. PHYSICAL PROPERTIES OF LEAD

Property	Value
Atomic weight	207.2g
Melting point	327°C
Boiling point	1770°C
Specific gravity	
20°C	11.35 g/cm^3
327°C (solid)	11.00 g/cm^3
327°C (liquid)	10.67 g/cm^3
Specific heat	130 J/(kg-K)[a]
Latent heat of fusion	25 J/g[a]
Latent heat of vaporization	860 J/g[a]
Vapor pressure	
980°C	0.133 kPa[b]
1160°C	1.33 kPa[b]
1420°C	13.33 kPa[b]
1500°C	26.7 kPa[b]
1600°C	53.3 kPa[b]
Thermal conductivity	
28°C	34.7 W/(m-K)
100°C	33.0 W/(m-K)
327°C (solid)	30.5 W/(m-K)
327°C (liquid)	24.6 W/(m-K)
Thermal conductivity (relative to Ag = 100)	8.2
Coefficient of linear expansion, at 20°C per °C	29.1×10^{-6}
Surface tension at 360°C, mN/m (= dyn/cm)	442

Source: Reference 8

[a] To convert J to cal, divide by 4.184.
[b] To convert kPa to mm Hg, multiply by 7.5.

TABLE 3-2. PHYSICAL PROPERTIES OF THE PRINCIPAL LEAD-ORE COMPOUNDS

	Galena	Cerussite	Anglesite
Formula	PbS	$PbCO_3$	$PbSO_4$
Lead, percent	86.6	77.5	68.3
Hardness, Mohs scale	2.5 to 2.75	3 to 3.5	2.5 to 3
Luster	Metallic	Adamantine to vitreous, resinous	Adamantine to vitreous, resinous
Color	Lead gray	Colorless to white	Colorless to white
Density, g/cm^3	7.58	6.55	6.38

Source: Reference 9

Lead in its compound form also has many uses in manufacturing processes, primarily as pigments. Lead compounds can be classified into the following general categories:

- Organolead compounds;
- Lead oxides;
- Lead sulfides; and
- Lead salts.

Each of these classes of lead compounds is discussed briefly below. Table 3-4 presents a summary of the chemical formulas and end uses of the most commonly used lead compounds.

3.1.1 Organolead Compounds

Organolead compounds are distinctive with at least one lead-carbon bond. Only two types of organolead compounds have found large-scale commercial applications: tetramethyllead (TML) and tetraethyllead (TEL). However, with the removal of lead from

TABLE 3-3. USES OF LEAD ALLOYS

Alloy	Uses
Lead - Copper	
<0.10% copper by wt.	Lead sheet Lead pipes Sheathings for electric power cables Wire and other fabricated lead products Tank linings Tubes for acid-mist precipitators Steam heating pipes for acid-plating baths
60 to 70% copper by wt. (leaded brass or bronze)	Bearings and bushings
Lead - Antimony	Lead-acid battery positive grids, posts, and connectors Flashings and roofing materials Cable sheathings Ammunition Tank linings, pumps, valves, pipes, and heating and cooling coils in chemical operations using sulfuric acid or sulfate solutions at elevated temperatures Lead sheet Anodes in metal-plating and metal-electrowinning operations Collapsible tubes Wheel-balancing weights for automobiles and trucks Special weights and castings Battery cable clamps
Lead - Antimony - Tin	Printing-type metals Bushing and sleeve bearings Journal bearings in freight cars and mobile cranes Decorative, slush, and special castings (e.g., miniature figures, casket trim, belt buckles, trophies, and holloware)
Lead - Tin	Solders for sealing and joining metals (e.g., electronic applications including printed circuit boards) Automobile radiators High-temperature heat exchangers Terne-steel sheets for radio and television chassis, roofs, fuel tanks, air filters, oil filters, gaskets, metal furniture, gutters, and downspouts Coating of copper sheet used for building flashings Coating of steel and copper electronic components Electroplating
Lead - Calcium	Grids for large stationary stand-by power, submarine, and specialty sealed batteries Original equipment automotive batteries Negative grids for replacement batteries Electrowinning anodes Cable sheathing, sleeving for cable splices, specialty boat keels, and lead-alloy tapes
Lead - Calcium - Aluminum	Negative battery grids

TABLE 3-3. USES OF LEAD ALLOYS (CONTINUED)

Alloy	Uses
Lead - Calcium - Tin	Maintenance-free automotive battery grids Electrowinning anodes
Lead - Silver	Insoluble anodes for zinc and manganese electroplating Anodes in the d-c cathodic protection of steel pipe and structures used in fresh, brackish, or seawater Solder in high pressure, high temperature cooling systems Positive grids of lead-acid batteries Soft solders
Lead - Silver - Antimony	Production of thin copper foil for electronics
Lead - Silver - Calcium	Zinc electrowinning
Lead - Strontium - Tin	Maintenance-free battery grids Bearings
Lead - Tellurium	Used in pipes and sheets for chemical installations Shielding for nuclear reactors Cable sheathing
Fusible (lead, cadmium, bismuth, and tin in varying compositions)[a]	Fuses Low-melting sprinkler systems Foundry patterns Molds, dies, punches, chucks, cores, mandrels, flexible tubing, and low-temperature solder
Lead - Idium	Used to solder metals to glass
Lead - Lithium and Lead - Lithium - Tin	Battery grids Bearings

Source: Reference 10

[a] Alloys that melt at very low temperatures (i.e., 32°F to 361.4°F [0°C to 183°C]).

TABLE 3-4. LEAD COMPOUNDS

Compound	Chemical Formula or Description	Uses
Lead acetate	$Pb(C_2H_3O_2)_2 \cdot 3H_2O$	Dyeing of textiles, waterproofing, varnishes, lead driers, chrome pigments, gold cyanidation process, insecticide, anti-fouling paints, analytical reagent, hair dye
Lead alkyl, mixed	A mixture containing various methyl and ethyl derivatives of tetraethyl lead and tetramethyl lead	Anti-knock agents in aviation gasoline
Lead antimonate	$Pb_3(SbO_4)_2$	Staining glass, crockery, and porcelain
Lead arsenate	$Pb_3(AsO_4)_2$	Insecticide, herbicide
Lead arsenite	$Pb(AsO_2)_2$	Insecticide
Lead azide	$Pb(N_3)_2$	Primary detonating compound for high explosives
Lead borate	$Pb(BO_2)_2 \cdot H_2O$	Varnish and paint drier, waterproofing paints, lead glass, electrically conductive ceramic coatings
Lead borosilicate	Composed of a mixture of the borate and silicate of lead	A constituent of optical glass
Lead carbonate, basic	$2PbCO_3 \cdot Pb(OH)_2$	Exterior paint pigments, ceramic glazes
Lead chloride	$PbCl_2$	Preparation of lead salts, lead chromate pigments, analytical reagent
Lead chromate	$PbCrO_4$	Pigment in industrial paints, rubber, plastics, ceramic coatings; organic analysis
Lead cyanide	$Pb(CN)_2$	Metallurgy
Lead dimethyldithiocarbamate	$Pb[SCSN(CH_3)_2]_2$	Vulcanization accelerator with litharge
Lead dioxide	PbO_2	Oxidizing agent, electrodes, lead-acid storage batteries, curing agent for polysulfide elastomers, textiles (mordant, discharge in dyeing with indigo), matches, explosives, analytical reagent.
Lead fluoborate	$B_2F_8 \cdot Pb$	Salt for electroplating lead; can be mixed with stannous fluoborate to electroplate any composition of tin and lead as an alloy

TABLE 3-4. LEAD COMPOUNDS (CONTINUED)

Compound	Chemical Formula or Description	Uses
Lead fluoride	PbF_2	Electronic and optical applications, starting materials for growing single-crystal solid-state lasers, high-temperature dry film lubricants in the form of ceramic-bonded coatings
Lead fluosilicate	$PbSiF_6 \cdot 2H_2O$	Solution for electrorefining lead
Lead formate	$Pb(CHO_2)_2$	Reagent in analytical determinations
Lead hydroxide	$Pb(OH)_2$	Lead salts, lead dioxide
Lead iodide	PbI_2	Bronzing, printing, photography, cloud seeding
Lead linoleate	$Pb(C_{18}H_{31}O_2)_2$	Medicine, drier in paints and varnishes
Lead maleate, tribasic	$C_4H_6O_5 \cdot Pb$	Vulcanizing agent for chlorosulfonated polyethylene. Highly basic stabilizer with high heat stability in vinyls
Lead molybdate	$PbMoO_4$	Analytical chemistry, pigments
Lead β-naphthalenesulfonate	$Pb(C_{10}H_7SO_3)_2$	Organic preparations
Lead naphthenate	$C_7H_{12}O_2 \cdot xPb$	Paint and varnish drier, wood preservative, insecticide, catalyst for reaction between unsaturated fatty acids and sulfates in the presence of air, lube oil additive
Lead nitrate	$Pb(NO_3)_2$	Lead salts, mordant in dyeing and printing calico, matches, mordant for staining mother of pearl, oxidizer in the dye industry, sensitizer in photography, explosives, tanning, process engraving, and lithography
Lead oleate	$[CH_3(CH_2)_7CH{:}CH(CH_2)_7COO]_2Pb$	Varnishes, lacquers, paint drier, high-pressure lubricants
Lead oxide, red	Pb_3O_4	Storage batteries, glass, pottery, and enameling, varnish, purification of alcohol, packing pipe joints, metal-protective paints, fluxes and ceramic glazes.
Lead phosphate	$Pb_3(PO_4)_2$	Stabilizing agent in plastics
Lead phosphate, dibasic	$PbHPO_4$	Imparting heat resistance and pearlescence to polystyrene and casein plastics

TABLE 3-4. LEAD COMPOUNDS (CONTINUED)

Compound	Chemical Formula or Description	Uses
Lead phosphite, dibasic	$2PbO \cdot PbHPO_3 \cdot 1/2H_2O$	Heat and light stabilizer for vinyl plastics and chlorinated paraffins. As a UV screening and antioxidizing stabilizer for vinyl and other chlorinated resins in paints and plastics
Lead phthalate, dibasic	$C_6H_4(COO)_2Pb \cdot PbO$	Heat and light stabilizer for general vinyl use
Lead resinate	$Pb(C_{20}H_{29}O_2)_2$	Paint and varnish drier, textile waterproofing agent
Lead salicylate	$Pb(OOCC_6H_4OH)_2 \cdot H_2O$	Stabilizer or costabilizer for flooring and other vinyl compounds requiring good light stability
Lead sesquioxide	Pb_2O_3	Ceramics, ceramic cements, metallurgy, varnishes
Lead silicate	$PbSiO_3$	Ceramics, fireproofing fabrics
Lead silicate, basic	A pigment made up of an adherent surface layer of basic lead silicate and basic lead sulfate cemented to silica	Pigment in industrial paints
Lead silicochromate	A yellow lead-silicon pigment	Normal lead silicon chromate is used as a yellow prime pigment for traffic marking paints. Basic lead silicon chromate is used as a corrosive inhibitive pigment for metal protective coatings, primers, and finishers. Also for industrial enamels requiring a high gloss
Lead sodium thiosulfate	$PbS_2O_3 \cdot 2Na_2S_2O_3$	Matches
Lead stannate	$PbSnO_3 \cdot 2H_2O$	Additive in ceramic capacitors, pyrotechnics
Lead stearate	$Pb(C_{18}H_{35}O_2)_2$	Varnish and lacquer drier, high-pressure lubricants, lubricant in extrusion processes stabilizer for vinyl polymers, corrosion inhibitor for petroleum, component of greases, waxes, and paints
Lead subacetate	$2Pb(OH)_2Pb(C_2H_3O_2)_2$	Decolorizing agent (sugar solutions, etc.)
Lead suboxide	Pb_2O	In storage batteries
Lead sulfate	$PbSO_4$	Storage batteries, paint pigments
Lead sulfate, basic	$PbSO_4 \cdot PbO$	Paints, ceramics, pigments

TABLE 3-4. LEAD COMPOUNDS (CONTINUED)

Compound	Chemical Formula or Description	Uses
Lead sulfate, blue basic	Composition: Lead sulfate (min) 45%, lead oxide (min) 30%, lead sulfide (max) 12%, lead sulfite (max) 5%, zinc oxide 5%, carbon and undetermined matter (max) 5%	Components of structural-metal priming coat paints, rust-inhibitor in paints, lubricants, vinyl plastics, and rubber products
Lead sulfate, tribasic	$3PbO \cdot PbSO_4 \cdot H_2O$	Electrical and other vinyl compounds requiring high heat stability
Lead sulfide	PbS	Ceramics, infrared radiation detector, semi-conductor, ceramic glaze, source of lead
Lead telluride	PbTe	Single crystals used as photoconductor and semiconductor in thermocouples
Lead tetraacetate	$Pb(CH_3COO)_4$	Oxidizing agent in organic synthesis, laboratory reagent
Lead thiocyanate	$Pb(SCN)_2$	Ingredient of priming mix for small-arms cartridges, safety matches, dyeing
Lead titanate	$PbTiO_3$	Industrial paint pigment
Lead tungstate	$PbWO_4$	Pigment
Lead vanadate	$Pv(VO_3)_2$	Preparation of other vanadium compounds, pigment
Lead zirconate titanate	$PbTiZrO_3$	Element in hi-fi sets and as a transducer for ultrasonic cleaners, ferroelectric materials in computer memory units
Litharge	PbO	Storage batteries, ceramic cements and fluxes, pottery and glazes, glass, chromium pigments, oil refining, varnishes, paints, enamels, assay of precious metal ores, manufacture of red lead, cement (with glycerol), acid-resisting compositions, match-head compositions, other lead compounds, rubber accelerator

Source: Reference 11

gasoline, these compounds are no longer produced in the United States, although they are imported for special applications such as use in aircraft fuel.

3.1.2 Lead Oxides

Lead oxide is a general term and includes lead monoxide or "litharge" (PbO); lead tetraoxide or "red lead" (Pb_3O_4); and black or "gray" oxide, which is a mixture of 70 percent lead monoxide and 30 percent metallic lead. Litharge is used primarily in the manufacture of various ceramic products. Because of its electrical and electronic properties, litharge is also used in capacitors and electrophotographic plates, as well as in ferromagnetic and ferroelectric materials. It is also used as an activator in rubber, a curing agent in elastomers, a sulfur removal agent in the production of thiols and in oil refining, and an oxidation catalyst in several organic chemical processes. It also has important markets in the production of many lead chemicals, dry colors, soaps (i.e., lead stearate), and driers for paint. Another important use of litharge is the production of lead salts, particularly those used as stabilizers for plastics, notably polyvinyl chloride materials.[12]

Lead tetraoxide or red lead is a brilliant orange-red pigment. It is used as a pigment in anticorrosion paints for steel surfaces. It is also used in lead oxide pastes for tubular storage batteries, in ballistic modifiers for high-energy propellants, in ceramic glazes for porcelain, in lubricants for hot pressing metals, in radiation-shielding foam coatings in clinical x-ray exposure, and in rubber adhesives for roadway joints.[10] Black lead is made for specific use in the manufacture of lead acid storage batteries.[12]

Lead dioxide (PbO_2) is a brownish, black powder. Because of its strong oxidizing properties, it is used in the manufacture of dyes and to control burning in incendiary fires. It is also used as a curing agent for liquid polysulfide polymers and low molecular weight butyl and polyisopropane.[13]

Lead titanate ($PbTiO_3$) and lead zirconate ($PbZrO_3$) are two lead oxides that are frequently mixed, resulting in highly desirable piezoelectric properties that are used in high-power acoustic radiating transducers, hydrophones, and specialty instruments.[14]

3.1.3 Lead Sulfides

Lead sulfide (PbS) or galena is one of the most common lead minerals, appearing black and opaque. It is an efficient heat conductor and has semiconductor properties, making it desirable for use in photoelectric cells. Lead sulfide is used in ceramics, infrared radiation detectors, and ceramic glaze.[14,15]

3.1.4 Lead Salts

Most lead salts are white or colorless and are used commercially as pigments. Basic lead carbonate ($Pb(OH)_2 \cdot 2PbCO_3$), basic lead sulfate ($Pb(SO_4) \cdot PbO$), and basic lead silicates ($3PbO \cdot SiO_2$) are well known white pigments. Basic lead carbonate is used as a component of ceramic glazes, as a curing agent with peroxides to form improved polyethylene wire insulation, as a color-changing component of temperature-sensitive inks, as a component of lubricating greases, and as a component of weighted nylon-reinforced fish nets made of polyvinylchloride (PVC) fibers.[10]

Basic lead sulfate helps provide efficient, long-term, economic heat stability to flexible and rigid PVC. It can be dispersed easily, and has excellent electrical insulation properties. It is also an effective activator for azodicarbonamide blowing agents for vinyl foams.[10]

Basic lead silicates are used by the glass, ceramic, paint, rubber, and plastics industries. Lead monosilicate ($3PbO \cdot 3SiO_2$) is used in formulating lead-bearing glazes for the ceramics industry and as a source of PbO in the glass industry. Lead bisilicate ($PbO \cdot O \cdot O_3Al_2O_3 \cdot 1.95SiO_2$) was developed as a low solubility source of lead in ceramic glazes for foodware. Tribasic lead silicate ($3PbO \cdot SiO_2$) is used primarily by glass and frit producers.[10]

Lead chromates ($PbCrO_4$), colored salts, are used frequently as orange and yellow pigments.[11]

Lead borates [$Pb(BO_2)_2H_2O$], germanates ($PbO{\cdot}GeO_2$), and silicates ($PbO{\cdot}SiO_2$) are glass-forming compounds that impart unique properties to glasses, enamels, glazes, and other ceramics. Other salts are used as stabilizers for plastics and rubbers, explosives, and in electroplating.[10,11]

3.2 OVERVIEW OF PRODUCTION AND USE

Lead is produced in one of two ways: either by primary production through mining of ores or secondary production through recycling. According to the U.S. Bureau of Mines, the 1992 domestic production of recoverable lead from lead ores was 437,715 tons (397,923 Mg), or 22 percent of the total lead produced domestically. The 1992 domestic refined lead recovered from lead scrap was 1,008,257 tons (916,597 Mg), or 78 percent of the total lead produced domestically.[16]

In 1992, domestic lead ore mining in the United States accounted for about 13 percent of the total world lead mine production for that year. Australia, Canada, China, and Kazakhstan (formerly part of the U.S.S.R.) accounted for nearly 47 percent of the world's lead mine production in 1992. Other major lead ore producing countries include Mexico, North Korea, Morocco, Peru, South Africa, Sweden, and other nations part of the former U.S.S.R.[16]

Most of the lead ore mined in the United States comes from the “lead-belt” in southeast Missouri. The recoverable lead mine production from Missouri was about 76 percent of the total lead mine production in the United States in 1992. In Missouri, lead is primarily recovered from lead, zinc, and lead-zinc ores. Lead is also mined in Alaska, Arizona, Colorado, Idaho, Illinois, Montana, New Mexico, New York, and Tennessee. In these states, lead is recovered from zinc, lead-zinc, copper, gold, and fluorspar ore deposits.[16]

Lead ore is mined underground except when it is mined with copper ores, which are typically mined in open pits. The lead content of ores typically ranges from 3 to 8 percent. The ores are processed at the mine site to produce a lead ore concentrate of 55 to 70 percent lead. Once dried, the lead-ore concentrates are shipped to primary lead smelter/refinery plants for further processing.

Lead ore concentrates are processed at primary lead smelter/refinery plants to produce lead metal or alloys. In 1992, primary lead smelter/refinery plants operating in the United States produced 335,270 tons (304,791 Mg) of refined lead.[16] These smelters/refineries were the following: ASARCO (with smelter located in East Helena, MT, and refinery located in Omaha, NE); ASARCO (with both smelter and refinery located in Glover, MO); and Doe Run (with both smelter and refinery located in Herculaneum, MO).

Lead is among the most recycled nonferrous metals in the world. Secondary production (from recycled materials) has risen steadily, such that in 1992, secondary output surpassed primary output in the United States by about a factor of three. This growth reflects the favorable economic conditions associated with lead recycling and the ability of lead to retain its physical and chemical properties when recycled.[17]

Secondary lead smelters and refineries recover and refine metal from lead-bearing scrap materials and residues to produce lead and lead alloy ingots, lead oxide, and lead pigments. About 86 percent of recycled scrap was from lead-acid battery plates.[16]

In 1992, 1,330,228 tons (1,236,571 Mg) of lead were consumed by product manufacturing sectors in the United States. Figure 3-1 shows the various manufacturing sectors consuming lead in 1992.[16]

As shown in Figure 3-1, the manufacture of storage batteries is the major end use of lead (accounting for 81 percent of domestic lead use). About 63 percent of the total storage battery consumption is for manufacturing battery posts and grids, and 37 percent was for manufacturing lead oxides used in battery paste.[16]

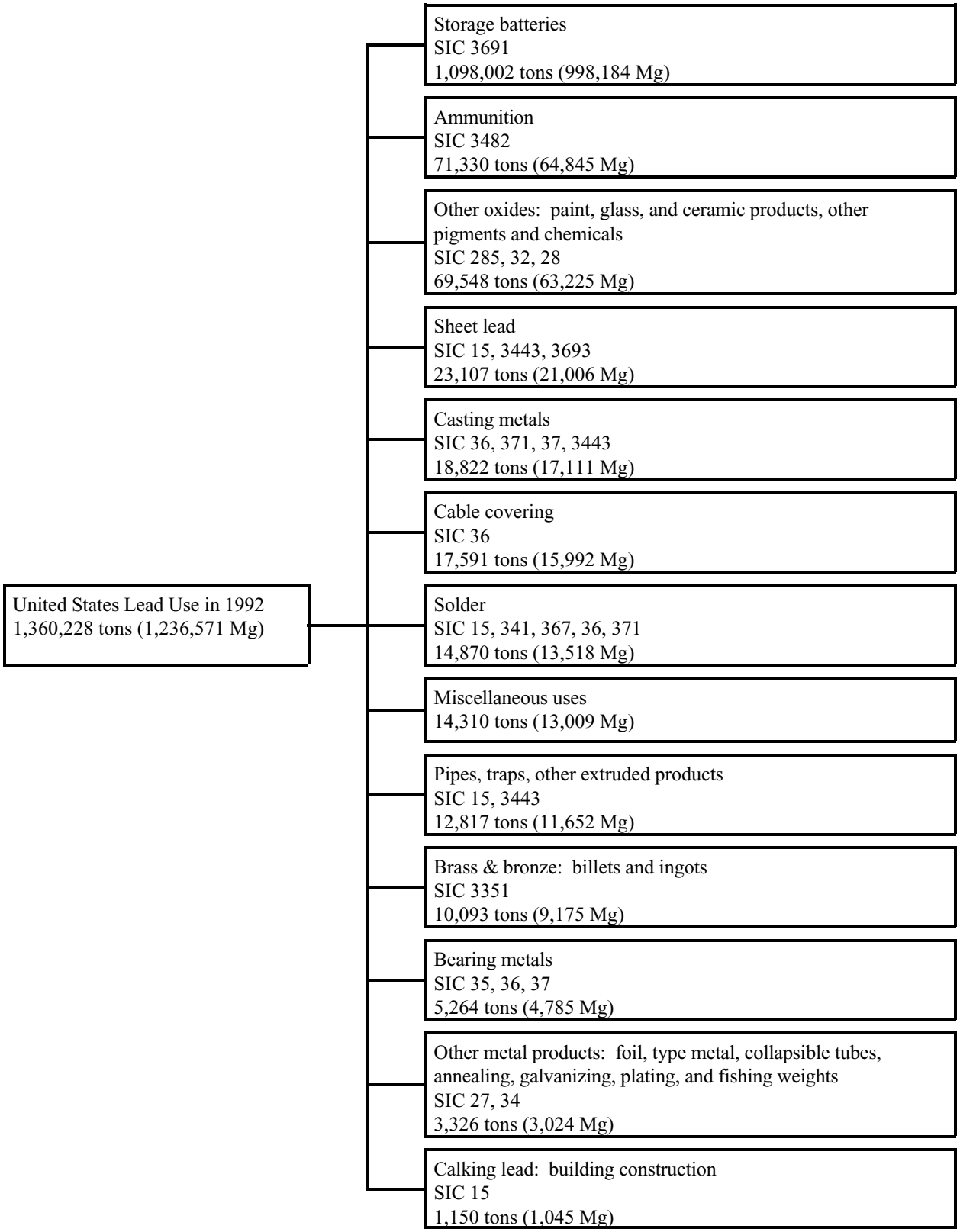

Figure 3-1. Consumption of Lead in the United States in 1992

Source: Reference 16.

The manufacture of ammunition and "other oxides" are the next largest uses of lead, each accounting for 5 percent of the total domestic lead consumption in 1992. "Other oxides" include the manufacture of pigments and chemicals, paints, glass, and ceramic products. The manufacture of pigments and chemicals account for 16 percent, and the manufacture of paints and glass and ceramics account for 84 percent of the total lead consumption for the "other oxides" category.[16]

The manufacture of casting materials, solder, sheet metal, and cable covering each accounted for 1 to 2 percent of total lead consumption in 1992.[16]

Some uses of lead experiencing increased growth over the past few years with continued growth expected are the use of lead in cathode ray tubes for television and computer screens (to protect viewer and service technicians from harmful radiation), and use of lead solder in the microelectronics industry.[17]

SECTION 4.0

EMISSIONS OF LEAD AND LEAD COMPOUNDS FROM THE METALLURGICAL INDUSTRY

4.1 PRIMARY LEAD SMELTING

Lead is recovered from a sulfide ore, primary galena (lead sulfide), which also contains small amounts of copper, iron, zinc, and other trace elements. A description of the process used to manufacture lead and a discussion of the emissions resulting from the various operations are presented below.

A list of primary lead smelters currently in operation within the United States is given in Table 4-1. Primary lead smelters produced 449,800 tons (408,000 Mg) of refined lead in 1990.[19]

TABLE 4-1. DOMESTIC PRIMARY LEAD SMELTERS AND REFINERIES

Smelter	Refinery	1990 Production tons (Mg)
ASARCO, East Helena, MT	ASARCO, Omaha, NE	72,500 (65,800)
ASARCO, Glover, MO	Same site	123,200 (112,000)
Doe Run (formerly St. Joe), Herculaneum, MO	Same site	254,100 (231,000)

Source: Reference 19

4.1.1 Process Description

Figure 4-1 presents a typical process flow diagram for primary lead smelting. The recovery of lead from the lead ore consists of three main steps: sintering, reduction, and refining.[20]

Sintering is carried out in a sintering machine, which is a large oven containing a continuous steel pallet conveyor belt. Each pallet consists of perforated grates, and beneath the grates are wind boxes, which are connected to fans to provide a draft through the moving sinter charge. Depending on the direction of the draft, the sinter machine is characterized as either an updraft or downdraft machine. Except for the draft direction, all machines are similar in design, construction, and operation. Capacities range from 1,000 to 2,500 tons (910 to 2,270 Mg) per day. Lead concentrates account for 30 to 35 percent of the input material for the sintering process. The balance of the charge consists of fluxes such as limestone and large amounts of recycled sinter or smelter residues.[18]

The blast furnace reduces the lead oxide produced in the sintering machine to elemental lead and removes undesirable impurities as a slag. Reduction reactions to elemental lead occur around 2,900°F (1,600°C). The resulting metal, called bullion, assays 94 to 98 percent lead. The furnace is a rectangular, water-cooled steel shell or shaft atop a refractory-lined crucible or hearth. Both sides are equipped with tuyeres through which pressurized combustion or blast air is introduced. Furnace capacities range from 500 to 1,000 tons (454 to 910 Mg) per day. The charge to the furnace includes sinter, coke, slags from drossing and refining processes, silica, limestone, and baghouse dust. About 80 percent of the charge consists of sinter that may contain from 28 to 50 percent lead. Blast air is introduced through the side-mounted tuyeres, resulting in partial combustion of coke and formation of carbon monoxide, and providing the heat required to reduce lead oxide to lead bullion.

Most of the impurities react with the silica and limestone and form a slag. The slag is skimmed continuously from the furnace and is treated either at the smelter or is shipped

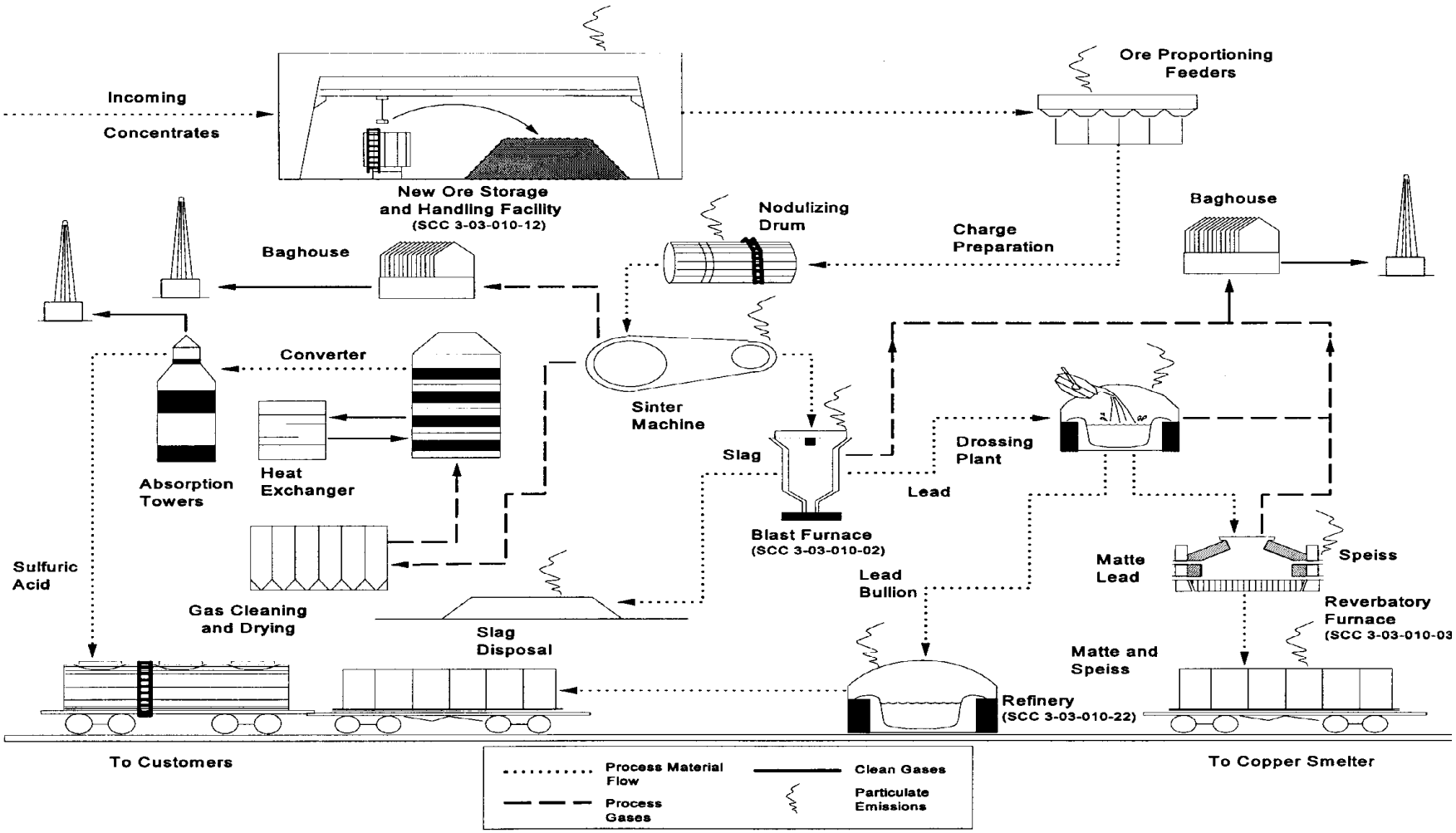

Figure 4-1. Typical Primary Lead-Processing Scheme

Source: Reference 23.

elsewhere for recovery of the metal content. Slags that are high in zinc are generally treated at the smelter in a zinc forming furnace to recover zinc oxide.[18]

The lead bullion is tapped from the furnace periodically, and is usually treated in a drossing kettle before undergoing final refining. In the kettle, the bullion is cooled and the higher melting impurities, primarily copper, float to the surface and form a dross which is skimmed off and subsequently treated in a reverberatory furnace. The bullion undergoes a final refining in a series of cast iron kettles. The final lead product, typically 99.99 percent or more pure, is then cast into pigs or ingots for shipping.[18]

The function of the dross reverberatory furnace is to separate lead bullion carried over in the dross from other metals of economic value or contaminants in the dross. The dross lead content may be as high as 90 percent. Although much smaller, the reverberatory furnace used is similar in construction to the reverberatory furnace used in copper smelting. Where applied, end-products usually include lead bullion, which is recycled; matte, which is rich in copper and usually sent to a copper smelter for copper recovery; and speiss, which is high in arsenic and antimony.[18]

4.1.2 Emission Control Techniques

Emission controls on primary lead smelter operations are used for controlling (PM) and sulfur dioxide (SO_2) emissions resulting from the blast furnace and sintering machines. Centrifugal collectors (cyclones) may be used in conjunction with fabric filters or electrostatic precipitators (ESPs) for PM control. Because lead emissions generally are associated with PM emissions, devices used to control PM emissions should also control lead emissions. However, no data on the effectiveness of fabric filters and ESPs in controlling lead emissions are available.[20]

4.1.3 Emissions

Lead can potentially be emitted from each unit operation within a primary lead smelting facility. Table 4-2 presents lead emission factors for specific primary lead operations. Since lead is generally emitted as PM, lead will be some fraction of total PM. The lead content of particulate emissions ranges from 20 to 65 percent. For blast furnaces, the lead content of total PM ranges from 10 to 40 percent. The lead content of particulate emissions from dross reverberatory furnaces ranges from 13 to 35 percent. For processes where the operating temperature is near the boiling point of lead, such as the sinter machine, lead fume may be emitted.

4.2 SECONDARY LEAD SMELTING

4.2.1 Source Location

In 1990, primary and secondary smelters in the United States produced 1,380,000 tons (1,255,000 Mg) of lead. Secondary lead smelters produced 946,000 tons (860,000 Mg) or about 69 percent of the total refined lead produced in 1990.[21] Table 4-3 lists U.S. secondary lead smelters according to their annual lead production capacity.

4.2.2 Process Description

The secondary lead smelting industry produces elemental lead and lead alloys by reclaiming lead, mainly from scrap automobile batteries. Blast, reverberatory, rotary, and electric furnaces are used for smelting scrap lead and producing secondary lead. Smelting is the reduction of lead compounds to elemental lead in a high-temperature furnace, which requires higher temperatures (2200 to 2300°F [1200 to 1260°C]) than those required for melting elemental lead (621°F [327°C]). Secondary lead may be refined to produce soft lead (which is nearly pure lead) or alloyed to produce hard lead. Most of the lead produced by secondary lead smelters is used in the production of lead-acid batteries.[21]

TABLE 4-2. LEAD EMISSION FACTORS FOR PRIMARY LEAD SMELTING FACILITIES

SCC	Emission Source	Control Device	Average Emission Factor in lb/ton (kg/Mg)	Emission Factor Range in lb/ton (kg/Mg)	Emission Factor Rating	Reference
3-03-010-02	Blast Furnace	None	1.0×10^{-4} (5.0×10^{-5})[a]	---	U	22
		Baghouse	6.7×10^{-2} (3.4×10^{-2})[b]	---	E	20
		Spray Tower/FF	1.7×10^{-2} (8.5×10^{-3})[a]	---	U	22
3-03-010-04	Ore Crushing	None	3.0×10^{-1} (1.5×10^{-1})[c]	---	U	23
		Baghouse	2.0×10^{-3} (1.0×10^{-3})[d]	---	E	20
3-03-010-25	Sinter Machine Leakage	ESP/Scrubber	3.2×10^{-2} (1.6×10^{-2})[e]	---	E	20
3-03-010-28	Tetrahedrite Drier	Baghouse	6.0×10^{-4} (3.0×10^{-4})[f]	---	E	20
3-03-010-29	Sinter Machine (weak gas)	ESP/Scrubber	1.9×10^{-2} (9.5×10^{-3})[e]	---	E	20
3-03-010-32	Ore Screening	Baghouse	2.0×10^{-3} (1.0×10^{-3})[f]	---	E	20

[a] Emission factors are expressed in lb (kg) of pollutant emitted per ton (Mg) of lead produced.
[b] Emission factors are expressed in lb of pollutant emitted per ton bullion processed.
[c] Emission factors are expressed in lb of pollutant emitted per ton of ore crushed.
[d] Emission factors are expressed in lb (kg) of pollutant emitted per ton (Mg) of lead in ore.
[e] Emission factors are expressed in lb (kg) of pollutant emitted per ton (Mg) of sinter produced.
[f] Emission factors are expressed in lb (kg) of pollutant emitted per ton (Mg) of ore processed.

"---" means data not available.

TABLE 4-3. U.S. SECONDARY LEAD SMELTERS GROUPED ACCORDING TO ANNUAL LEAD PRODUCTION CAPACITY

Smelter	Location
Small-Capacity Group:[a]	
Delatte Metals[b]	Ponchatoula, LA
General Smelting and Refining Company	College Grove, TN
Master Metals, Inc.[b]	Cleveland, OH
Metals Control of Kansas[b]	Hillsboro, KS
Metals Control of Oklahoma[b]	Muskogee, OK
Medium-Capacity Group:[c]	
Doe Run Company	Boss, MO
East Penn Manufacturing Company	Lyon Station, PA
Exide Corporation	Reading, PA
GNB, Inc.	Columbus, GA Frisco, TX
Gulf Coast Recycling, Inc.	Tampa, FL
Refined Metals Corporation[b]	Beech Grove, IN Memphis, TN
RSR Corporation	City of Industry, CA Middletown, NY
Schuylkill Metals Corporation	Forest City, MO
Tejas Resources, Inc.[b]	Terrell, TX
Large-Capacity Group:[d]	
Exide Corporation	Muncie, IN
Gopher Smelting and Refining, Inc.	Eagan, MN
GNB, Inc.	Vernon, CA
RSR Corporation	Indianapolis, IN
Sanders Lead Company	Troy, AL
Schuylkill Metals Corporation	Baton Rouge, LA

Source: Reference 21, 24

[a] Less than 22,000 tons (20,000 Mg).
[b] These facilities were not operating as of January 1995.
[c] 22,000 to 82,000 tons (20,000 to 75,000 Mg).
[d] Greater than 82,000 tons (75,000 Mg).

Lead-acid batteries represent about 90 percent of the raw materials used at a typical secondary lead smelter, although this percentage may vary from one plant to the next. These batteries contain approximately 18-20 lb (8.2-9.1 kg) of lead per battery consisting of 40 percent lead alloys and 60 percent lead oxide. Other types of lead-bearing raw materials recycled by secondary lead smelters include drosses (lead-containing byproducts of lead refining), which may be purchased from companies that perform lead alloying or refining but not smelting; battery plant scrap, such as defective grids or paste; and scrap lead, such as old pipes or roof flashing. Other scrap lead sources include cable sheathing, solder, and babbitt-metal.[21]

As illustrated in Figure 4-2, the normal sequence of operations in a secondary lead smelter is scrap receiving, charge preparation, furnace smelting, lead refining, and alloying and casting. In the majority of plants, scrap batteries are first sawed or broken open to remove the lead alloy plates and lead oxide paste material. The removal of battery covers is typically accomplished using an automatic battery feed conveyor system and a slow-speed saw. Hammer mills or other crushing/shredding devices are then used to break open the battery cases. Float/sink separation systems are typically used to separate plastic battery parts, lead terminals, lead oxide paste, and rubber parts. The majority of lead smelters recover the crushed plastic materials for recycling. Rubber casings are usually landfilled or are incinerated in the smelting furnace for their fuel value, and in many cases, lead is reclaimed from the casings.

Paste desulfurization, an optional lead recovery step used by some secondary lead smelters, requires the separation of lead sulfate and lead oxide paste from the lead grid metal, polypropylene plastic cases, separators, and hard rubber battery cases. Paste desulfurization involves the chemical removal of sulfur from the lead battery paste. The process improves furnace efficiency by reducing the need for fluxing agents to reduce lead-sulfur compounds to lead metal. The process also reduces sulfur dioxide (SO_2) furnace emissions. However, SO_2 emissions reduction is usually a less important consideration because many plants that perform paste desulfurization are also equipped with SO_2 scrubbers. About one-half of smelters perform paste desulfurization.[21]

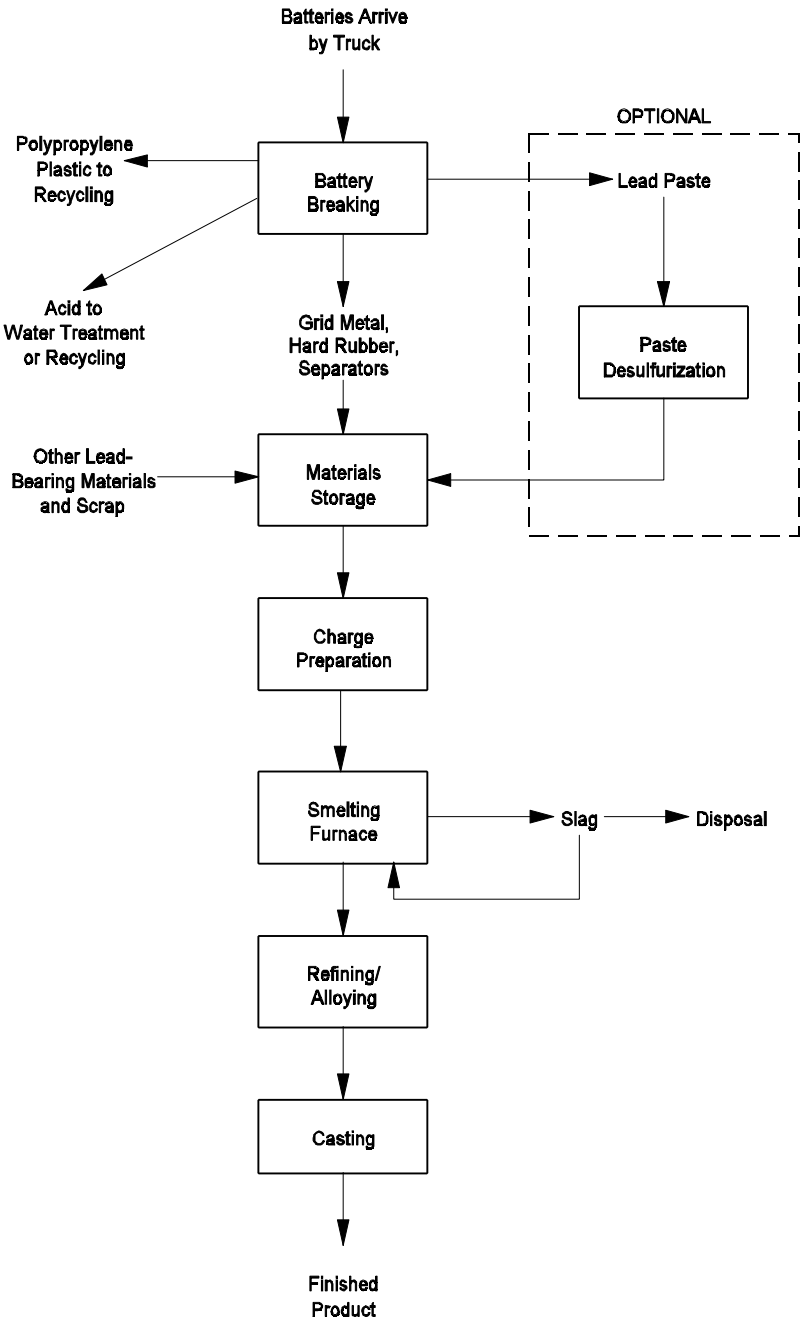

Figure 4-2. Simplified Process Flow Diagram for Secondary Lead Smelting

Source: Reference 21

After removing the lead components from the batteries, the lead scrap is combined with other charge materials, such as refining drosses and flue dust, and is charged to a reverberatory furnace. Reverberatory furnace slag, coke, limestone, sand, and scrap iron are fed to a blast, rotary or electric smelting furnace. Smelting furnaces are used to produce crude lead bullion, which is refined and/or alloyed into final lead products. In 1994, there were approximately 15 reverberatory furnaces, 24 blast furnaces, 5 rotary furnaces, and 1 electric furnace operating in the secondary lead industry in the United States.[21] Blast and reverberatory furnaces are currently the most common types of smelting furnaces used in the industry, although some new plants are using rotary furnaces.

Reverberatory Furnaces

A reverberatory furnace (Figure 4-3) is a rectangular refractory-lined furnace operated on a continuous basis. Natural gas- or fuel oil-fired burners located at one end or at the sides of the furnace are used to heat the furnace and charge material to an operating temperature of about 2200 to 2300°F (1200 to 1260°C).[21] Oxygen enrichment may be used to decrease the combustion air requirements. Reverberatory furnaces are maintained at negative pressure by an induced draft fan.

Reverberatory furnace charge materials include battery grids and paste, battery plant scrap, rerun reverberatory furnace slag, flue dust, drosses, iron, silica, and coke. A typical charge over one hour may include 9.3 tons (8.4 Mg) of grids and paste to produce 6.2 tons (5.6 Mg) of lead.[21]

Charge materials are often fed to a natural gas- or oil-fired rotary drying kiln, which dries the material before it reaches the furnace. The temperature of the drying kiln is about 400°F (200°C), and the drying kiln exhaust is drawn directly into the reverberatory furnace or ventilated to a control device. From the rotary drying kiln, the feed is either dropped into the top of the furnace through a charging chute, or fed into the furnace at fixed intervals with a hydraulic ram. In furnaces that use a feed chute, a hydraulic ram is often used as a stoker to move the material down the furnace.

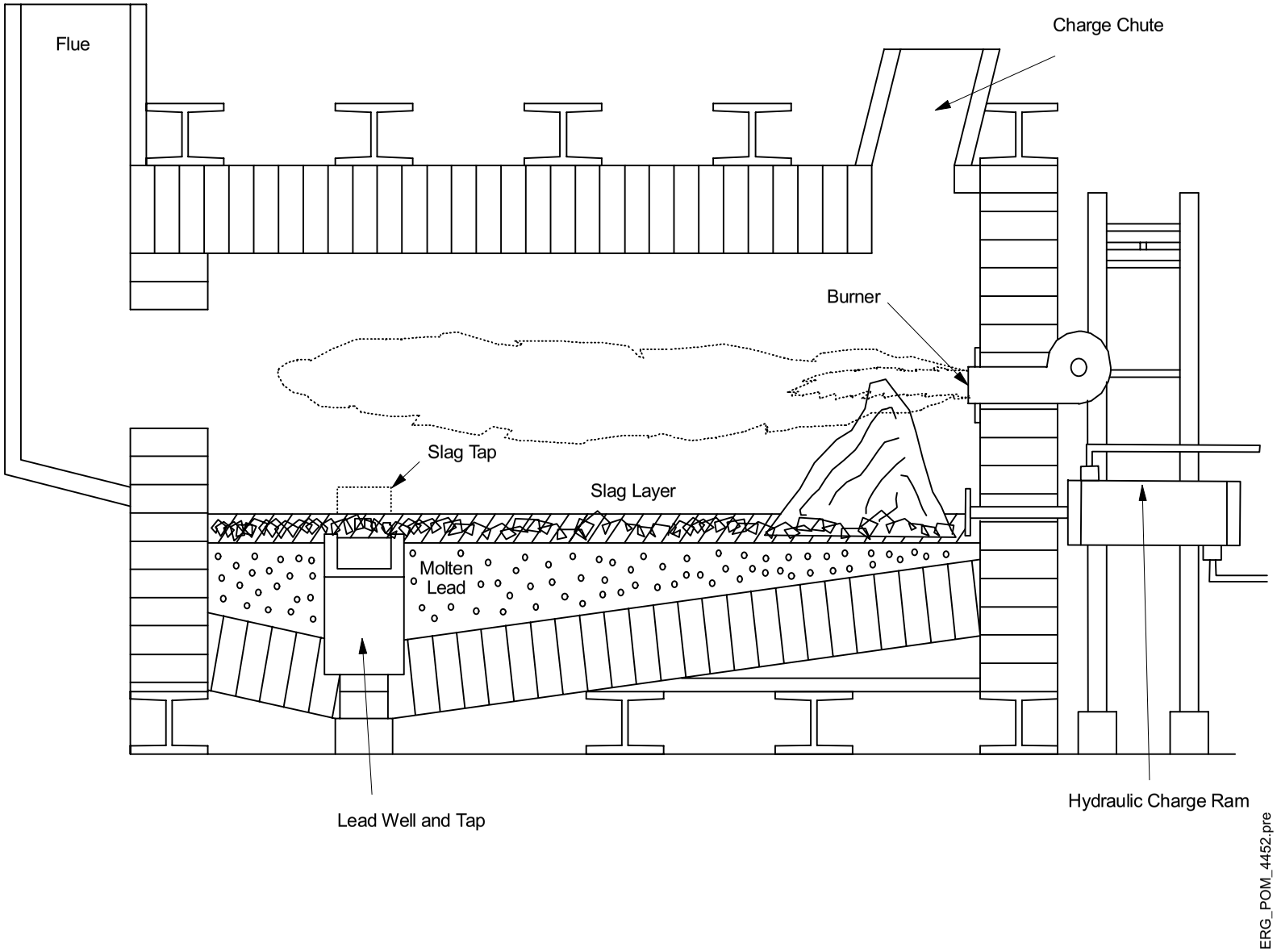

Figure 4-3. Cross-Sectional View of a Typical Stationary Reverberatory Furnace

Source: Reference 21

Source: Reference 21

Reverberatory furnaces are used to produce a soft, nearly pure lead product and a lead-bearing slag. This is done by controlling the reducing conditions in the furnace so that lead components are reduced to metallic lead bullion while the alloying elements (antimony, tin, arsenic) in the battery grids, posts, straps, and connectors are oxidized and removed in the slag. The reduction of $PbSO_4$ and PbO is promoted by the carbon-containing coke added to the charge material:

$$PbSO_4 + C \rightarrow Pb + CO_2 + SO_2 \qquad (1)$$

The $PbSO_4$ and PbO also react with the alloying elements to form lead bullion and oxides of the alloying elements, which are removed in the slag.

The molten lead collects in a pool at the lowest part of the hearth. Slag collects in a layer on top of this pool and retards further oxidation of the lead. The slag is made up of molten fluxing agents such as iron, silica, and lime, and typically has significant quantities of lead. Slag is usually tapped continuously and lead is tapped intermittently. The slag is tapped into a mould. The slag tap and crucible are hooded and vented to a control device. Reverberatory furnace slag usually has a high lead content (as much as 70 percent by weight) and is used as feed material in a blast or electric furnace to recover the lead. Reverberatory furnace slag may also be rerun through the reverberatory furnace during special slag campaigns before being sent to a blast or electric furnace. Lead may be tapped into a mold or directly into a holding kettle. The lead tap is usually hooded and vented to a control device.[21]

Blast Furnaces

A blast furnace (Figure 4-4) is a vertical furnace that consists of a crucible with a vertical cylinder affixed to the top. The crucible is refractory-lined and the vertical cylinder consists of a steel water-jacket. Oxygen-enriched combustion air is introduced into the furnace through tuyeres located around the base of the cylinder.

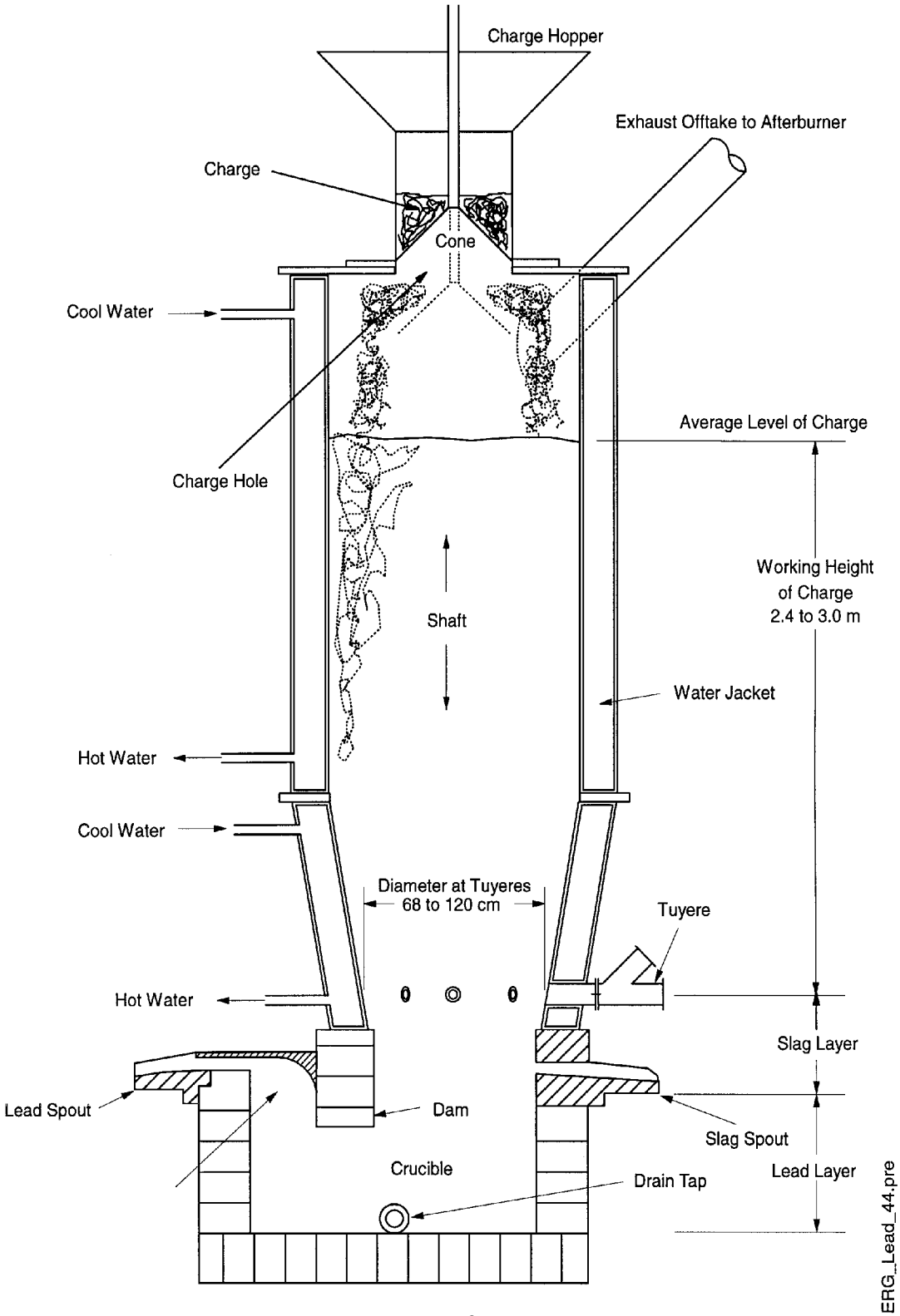

Figure 4-4. Cross-Section of a Typical Blast Furnace

Source: Reference 21.

Charge materials are pre-weighed to ensure the proper mixture and then are introduced into the top of the cylinder using a skip hoist, a conveyor, or a front-end loader. The charge fills nearly the entire cylinder. Charge material is added periodically to keep the level of the charge at a consistent working height while lead and slag are tapped from the crucible. Coke is added to the charge as the primary fuel, although natural gas jets may be used to start the combustion process. Combustion is self-sustaining as long as there is sufficient coke in the charge material. Combustion occurs in the layer of the charge nearest the tuyeres.

At plants that operate only blast furnaces, the lead-bearing charge materials may include broken battery components, drosses from the refining kettles, agglomerated flue dust, and lead-bearing slag. A typical charge over one hour may include 4.8 tons (4.4 Mg) of grids and paste, 0.3 tons (0.3 Mg) of coke, 0.1 tons (0.1 Mg) of calcium carbonate, 0.07 tons (0.06 Mg) of silica, 0.5 tons (0.4 Mg) of cast iron, and 0.2 tons (0.2 Mg) of rerun blast furnace slag, to produce 3.7 tons (3.4 Mg) of lead. At plants that also have a reverberatory furnace, the charge materials will also include lead-bearing reverberatory furnace slag.[21]

Blast furnaces are designed and operated to produce a hard (high alloy content) lead product by achieving greater furnace reduction conditions than those typically found in a reverberatory furnace. Fluxing agents include iron, soda ash, limestone, and silica (sand). The oxidation of the iron, limestone, and silica promotes the reduction of lead compounds and prevents oxidation of the lead and other metals. The soda ash enhances the reaction of $PbSO_4$ and PbO with carbon from the coke to reduce these compounds to lead metal.

Lead tapped from a blast furnace has a higher content of alloying metals (up to 25 percent) than lead produced by a reverberatory furnace. In addition, much less of the lead and alloying metals is oxidized and removed in the slag, so the slag has a low metal content (e.g., 1 to 3 percent) and may qualify as a nonhazardous solid waste.

Because air is introduced into the blast furnace at the tuyeres, blast furnaces are operated at positive pressure. The operating temperature at the combustion layer of the charge is

between 2200 and 2600°F (1200 and 1400°C), but the temperature of the gases exiting the top of the charge material is only between 750 and 950°F (400 and 500°C).

Molten lead collects in the crucible beneath a layer of molten slag. As in a reverberatory furnace, the slag inhibits the further oxidation of the molten metal. Lead is tapped continuously and slag is tapped intermittently, slightly before it reaches the level of the tuyeres. If the tuyeres become blocked with slag, they are manually or automatically "punched" to clear the slag. A sight glass on the tuyeres allows the furnace operator to monitor the slag level and ensure that the tuyeres are clear of slag. At most facilities, the slag tap is temporarily sealed with a clay plug, which is driven out to begin the flow of slag from the tap into a crucible. The slag tap and crucible are enclosed by a hood, which is vented to a control device.

A weir dam and siphon in the furnace are sometimes used to remove the lead from beneath the slag layer. Lead is tapped from a blast furnace into either a crucible or directly to a refining kettle designated as a holding kettle. The lead in the holding kettle is kept molten before being pumped to a refining kettle for refining and alloying. The lead tap on a blast furnace is hooded and vented to a control device.

Rotary Furnaces

As noted previously in this section, rotary furnaces, sometimes referred to as rotary reverberatory furnaces, (see figure 4-5), are used at only a few recently constructed secondary lead smelters in the United States.[21] Rotary furnaces have two advantages over other furnace types: the ease of adjusting the relative amount of fluxing agents (because the furnaces are operated on a batch rather than a continuous basis), and better mixing of the charge materials.

A rotary furnace consists of a refractory-lined steel drum mounted on rollers with a variable-speed motor to rotate the drum. An oxygen-enriched natural gas or fuel oil jet at one end of the furnace heats the charge material and the refractory lining of the drum. The connection to the flue is located at the same end as the jet. A sliding door at the end of the

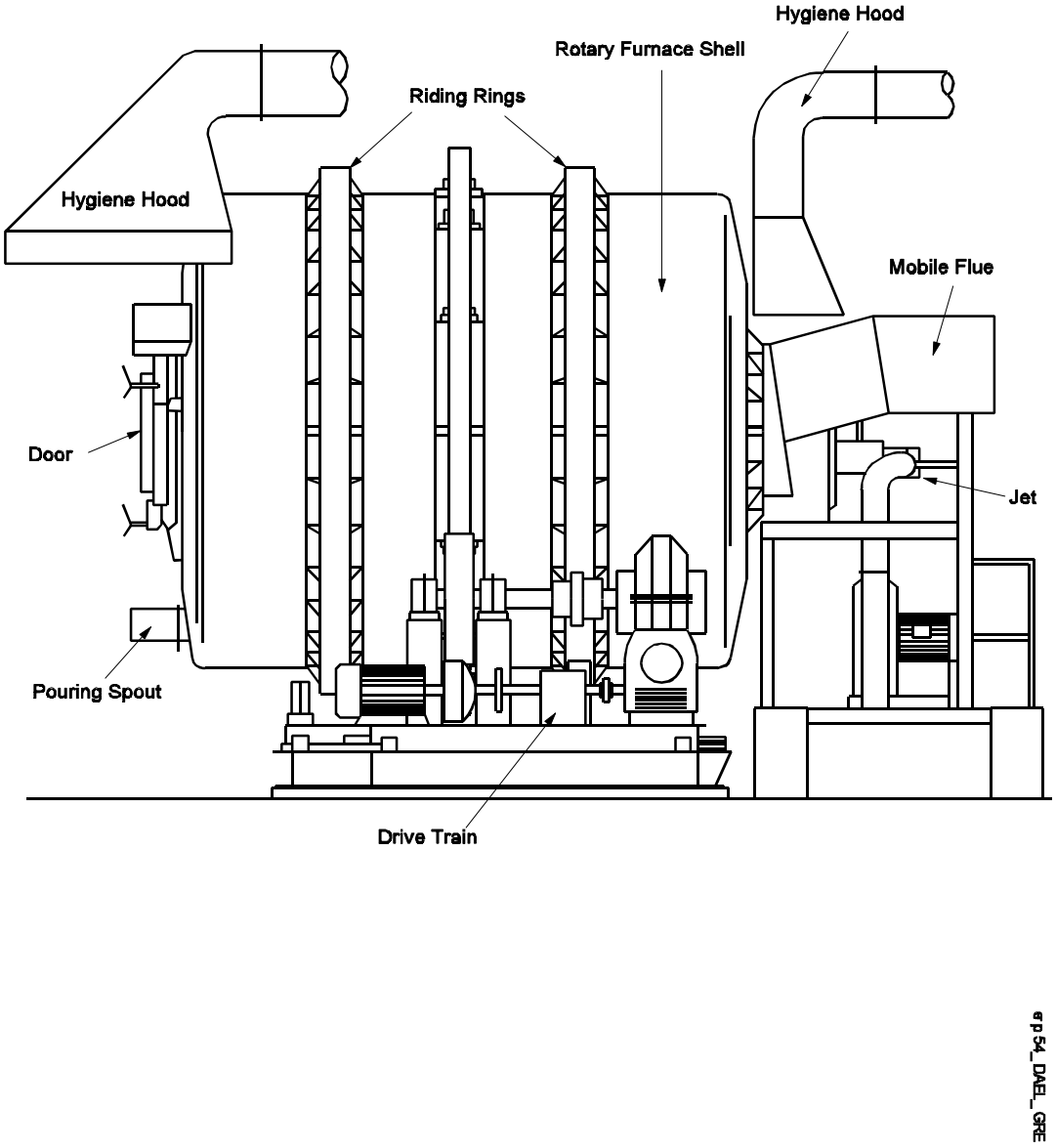

Figure 4-5. Side View of a Typical Rotary Reverberatory Furnace

Source: Reference 21.

furnace opposite the jet allows charging of material to the furnace. Charge materials are typically placed in the furnace using a retractable conveyor or charge bucket, although other methods are possible.

Lead-bearing raw materials charged to rotary furnaces include broken battery components, flue dust, and drosses. Rotary furnaces can use the same lead-bearing raw materials as blast furnaces. They usually produce slag that is relatively free of lead, less than 2 percent. As a result, a blast furnace is not needed for recovering lead from slag, which can be disposed of as a nonhazardous waste.

Fluxing agents for rotary furnaces may include iron, silica, soda ash, limestone, and coke. The fluxing agents are added to promote the conversion of lead compounds to lead metal. Coke is used as a reducing agent rather than as a primary fuel. A typical charge may consist of 12 tons (11 Mg) of wet battery scrap, 0.8 tons (0.7 Mg) of soda ash, 0.6 tons (0.5 Mg) of coke, and 0.6 tons (0.5 Mg) of iron, and will yield approximately 9 tons (8 Mg) of lead product.[21]

The lead produced by rotary furnaces is a semi-soft lead with an antimony content somewhere between that of lead from reverberatory and blast furnaces. Lead and slag are tapped from the furnace at the conclusion of the smelting cycle. Each batch takes 5 to 12 hours to process, depending on the size of the furnace. Like reverberatory furnaces, rotary furnaces are operated at a slight negative pressure.

Electric Furnaces

An electric furnace consists of a large, steel, kettle-shaped container that is refractory-lined (Figure 4-6). A cathode extends downward into the container and an anode is located in the bottom of the container. Second-run reverberatory furnace slag is charged into the top of the furnace. Lead and slag are tapped from the bottom and side of the furnace, respectively. A fume hood covering the top of the furnace is vented to a control device.

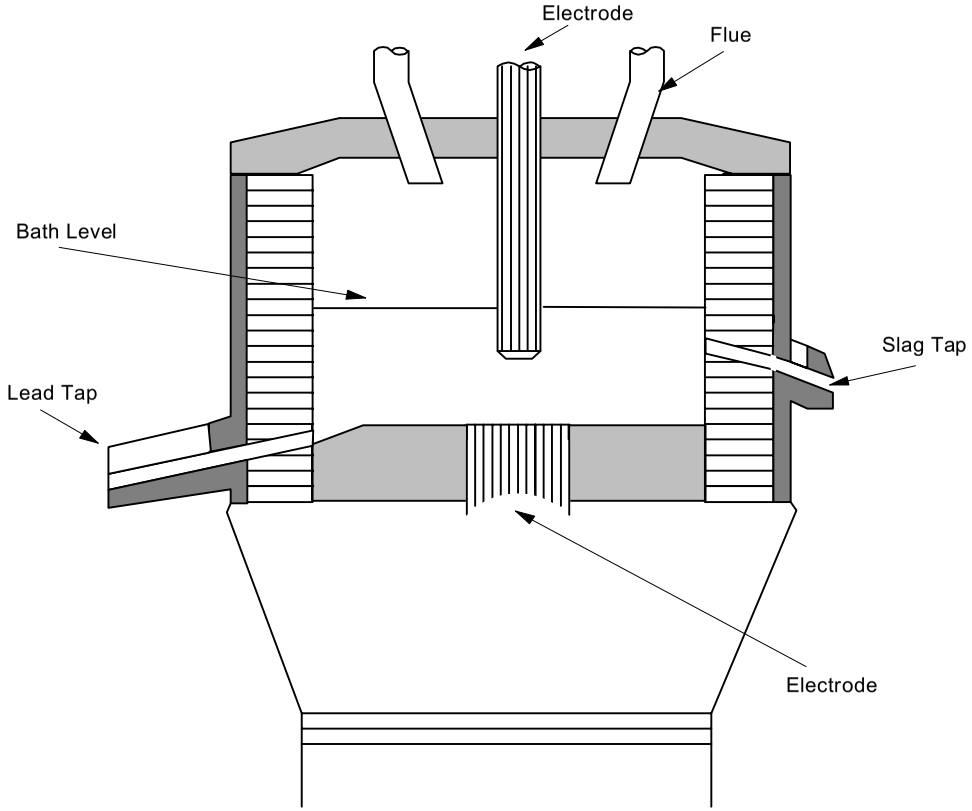

ERG_Lead_46.pre

Figure 4-6. Cross-Sectional View of an Electric Arc Furnace for Processing Slag

Source: Reference 24

Source: Reference 24

In an electric furnace, electric current flows from the cathode to the anode through the scrap charge. The electrical resistance of the charge causes the charge to heat up and become molten. There is no combustion process involved in an electric furnace.

There is only one known electric furnace in operation in the United States for the secondary lead industry. It is used to process second-run reverberatory furnace slag, and it fulfills the same role as a blast furnace used in conjunction with a reverberatory furnace. However, the electric furnace has two advantages over a blast furnace. First, because there are no combustion gases, ventilation requirements are much lower than for blast or reverberatory furnaces. Second, the electric furnace is extremely reducing, and produces a glass-like, nearly lead-free slag that is nonhazardous .[21]

Refining, the final step in secondary lead production, consists of removing impurities and adding alloying metals to the molten lead obtained from the smelting furnaces to meet a customer's specifications. Refining kettles are used to purify and alloy molten lead.

4.2.3 Emission Control Techniques

Three main strategies are used to control lead emissions and provide worker protection in secondary lead smelters. These three control strategies involve engineering measures, work practices, and personal protection. Engineering measures are the most effective means of lead emissions abatement. Included in this category are control devices, material substitution, process and equipment modification, isolation and automation, and local and general ventilation. Good work practices and personal hygiene have become important in reducing worker lead exposure. Included in these categories are housekeeping, administrative controls, and the use of personal protective equipment such as respirators, gloves, goggles, and aprons.[25]

Control devices used in secondary lead smelters include afterburners, baghouses, and scrubbers for furnace emissions control, and hooding and ventilation to a baghouse for process fugitive emissions control.[26]

4.2.4 Emissions

In secondary lead smelting operations, lead is emitted in some degree from each unit operation. Measuring the level of lead in the blood of workers in each area is the most readily available method of determining the operations that contribute the most to lead emissions. Blood lead levels were highest among workers in the furnace area, clean-up area, welding operations area, and the alloying and sawing areas. The lowest blood lead levels were found in workers in the shipping area.[25]

Hazardous air pollutants and criteria air pollutants are emitted from secondary lead smelters as process emissions from the main smelting furnace exhaust, process fugitive emissions from smelting furnace charging and tapping and lead refining, and fugitive dust emissions from materials storage and handling and vehicle traffic. Lead emission factors for these processes are shown in Table 4-4.

The largest sources of process fugitive emissions are furnace charging, slag tapping, and agglomerating furnace operation. Lesser sources are lead tapping and kettle refining. Battery breaking and lead casting have fewer emissions. Lead casting is not a substantial source of emissions because the temperature of molten lead is well below the fuming temperature of lead.

Fugitive dust emissions contain lead emissions but are dependent upon the size of the facility and the fugitive dust controls and practices in place at each facility. These emissions cannot be measured and can only be roughly estimated using emission factors and facility specific data.[21]

TABLE 4-4. LEAD EMISSION FACTORS FOR SECONDARY LEAD SMELTING

SCC Number	Emission Source	Control Device	Average Emission Factor in lb/ton (kg/Mg)[a]	Emission Factor Range in lb/ton (kg/Mg)[a]	Emission Factor Rating	Reference
3-04-004-03	Blast Furnace (Cupola)	None	1.04×10^{2} (5.2×10^{1})	6.4×10^{1} - 1.4×10^{2} (3.1×10^{1} - 7.0×10^{1})	C	28
		Wet Scrubber/FF/ Cyclone/Settling Chamber/Demister	2.9×10^{-1} (1.5×10^{-1})	3.0×10^{-2} - 6.4×10^{-1} (2.0×10^{-2} - 3.2×10^{-1})	C	28
3-04-004-04	Rotary Sweating Furnace	None	---	7.0 - 1.6×10^{1} (4.0 - 8.0)	E	28
		Baghouse	2.8×10^{-2} (1.4×10^{-2})	1.6×10^{-2} - 5.2×10^{-2} (8.0×10^{-3} - 2.6×10^{-2})	D	29
		Baghouse/scrubber	1.9×10^{-2} (9.5×10^{-3})	1.7×10^{-2} - 2.1×10^{-2} (8.5×10^{-3} - 1.1×10^{-2})	D	29
3-04-004-13	Smelting Furnace Fugitives	None	---	2.0×10^{-1} - 6.0×10^{-1} (1.0×10^{-1} - 3.0×10^{-1})	E	28
		Baghouse	1.2×10^{-2} (6.0×10^{-3})	7.4×10^{-3} - 2.1×10^{-2} (3.7×10^{-3} - 1.1×10^{-2})	U	30
3-04-004-02	Reverberatory Furnace	None	6.5×10^{1} (3.3×10^{-1})	3.5×10^{1} - 9.7×10^{1} (1.7×10^{1} - 4.8×10^{1})	C	28
3-04-004-26	Kettle Refining	None	1.0×10^{-2} (6.0×10^{-3})	---	C	28
3-04-004-14	Kettle Refining Fugitives	None	6.00×10^{-4} (3.00×10^{-4})	---	E	28
		Afterburner/FF/ Venturi Scrubber/ Demister	2.4 (1.2)	---	U	22

TABLE 4-4. LEAD EMISSION FACTORS FOR SECONDARY LEAD SMELTING (CONTINUED)

SCC Number	Emission Source	Control Device	Average Emission Factor in lb/ton (kg/Mg)[a]	Emission Factor Range in lb/ton (kg/Mg)[a]	Emission Factor Rating	Reference
3-04-004-09	Casting	None	1.0×10^{-2} (5.0×10^{-3})	---	C	28
3-04-004-25	Casting Fugitives	None	7.0×10^{-4} (3.5×10^{-4})	---	E	28

[a] Emission factors are expressed in lb (kg) of pollutant emitted per ton (Mg) of lead produced.

"---" means data not available.

FF = Fabric Filter.

4.3 PRIMARY COPPER PRODUCTION

4.3.1 Source Description

Seven primary copper smelters were operating in the United States in 1995 and one additional was closed for modifications.[27] The combined production capacity in 1995 for the seven plants in operation was 1,728,043 tons (1,570,623 Mg).

4.3.2 Process Description

The pyrometallurgical process used to extract copper from sulfide ore concentrates is based upon copper's strong affinity for sulfur and its weak affinity for oxygen as compared to that of iron and other base metals in the ore. The purpose of smelting is to separate the copper from the iron, sulfur, and commercially worthless mineral materials. All eight of the primary copper smelters currently produce anode copper from sulfur-bearing ores with the same basic processes:

- matte smelting;
- converting; and
- refining in an anode furnace.

Copper concentrates received by the smelter typically contain 24 to 30 percent copper, 30 percent sulfur, 25 percent iron, and 10 to 20 percent oxides of silicon, calcium, aluminum, magnesium, and zinc. (Copper-bearing ores typically contain 0.5 to 1 percent copper by mass. A froth-flotation process is utilized to produce the "concentrate." This froth-flotation process may or may not be performed at the smelter site.) Concentrates also contain input impurities, such as lead, arsenic, antimony, cadmium, chromium, cobalt, manganese, mercury, nickel, and selenium. These input impurities are typically found in combined concentrations of less than one percent. The smelter may also receive copper scrap (for direct input into the converters), or may receive other non-concentrate inputs, such as precipitates, or copper "speiss."

Incoming concentrates are typically dried before input into a smelting furnace or reactor. Several types of smelting furnaces/reactors are currently utilized in the United States, including flash furnaces, CONTOP reactors, Noranda reactors, and IsaSmelt reactors. Figure 4-7 illustrates basic smelting operations.

The smelting furnace/reactor produces molten copper matte, typically containing 55-75 percent copper, which is tapped from the furnace, and transferred by ladles to converters. The smelting furnace/reactors also produces slag, containing relatively low amounts of copper (typically less than two percent). This slag may be discarded directly, if less than 1 percent copper, or may be transferred to an electric slag-cleaning vessel (for further copper removal), or may be cooled and reconcentrated (in an attempt for further copper removal).

Molten copper matte is transferred by ladles from the furnace/reactor, and poured into the converters. In the converters, further sulfur is removed from the matte, and in addition, iron is oxidized and separated by skimming. The output from the converters is "blister" copper, generally containing greater than 98 percent copper. Figure 4-8 illustrates a typical converter.

Molten blister copper is poured from the converter, and transferred by ladles to anode furnaces, where further refining by removal of oxygen and other impurities takes place. The resulting "anode" copper is generally greater than 98.5 percent pure. It is cast into anodes for use in the final electrolytic refining step.

Further refining of "anode" copper into "cathode" copper (greater than 99.9 percent purity) is performed by electrolytic means in a "tank house." Production of cathode copper may or may not take place at the smelter site.

4.3.3 Emissions

Particulate matter and SO_2 are the principal air contaminants emitted from primary copper smelters. Actual emissions from a particular smelter will depend upon the smelting configuration (type and mix of equipment used), control devices applied, and the

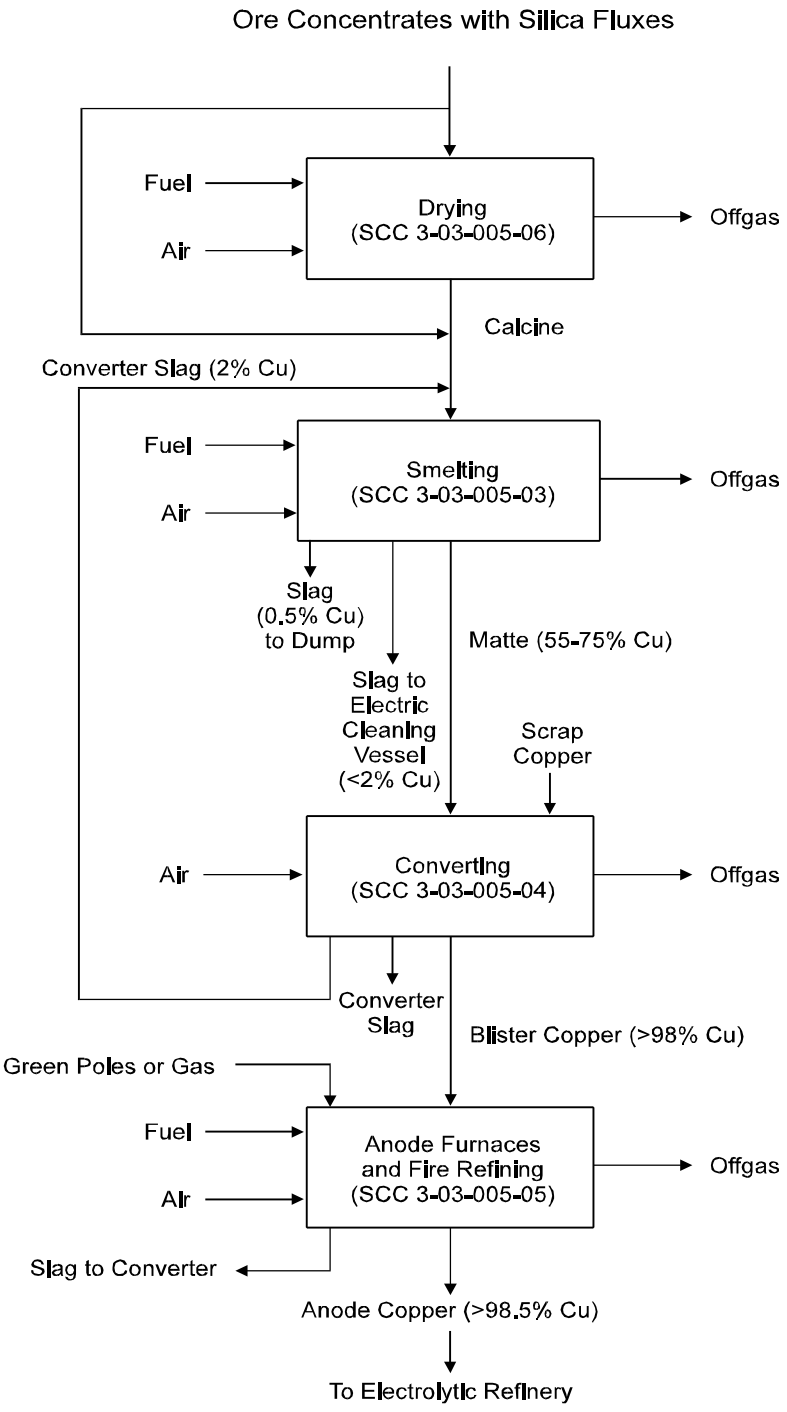

Figure 4-7. Typical Primary Copper Smelter Flowsheet

Source: Reference 27.

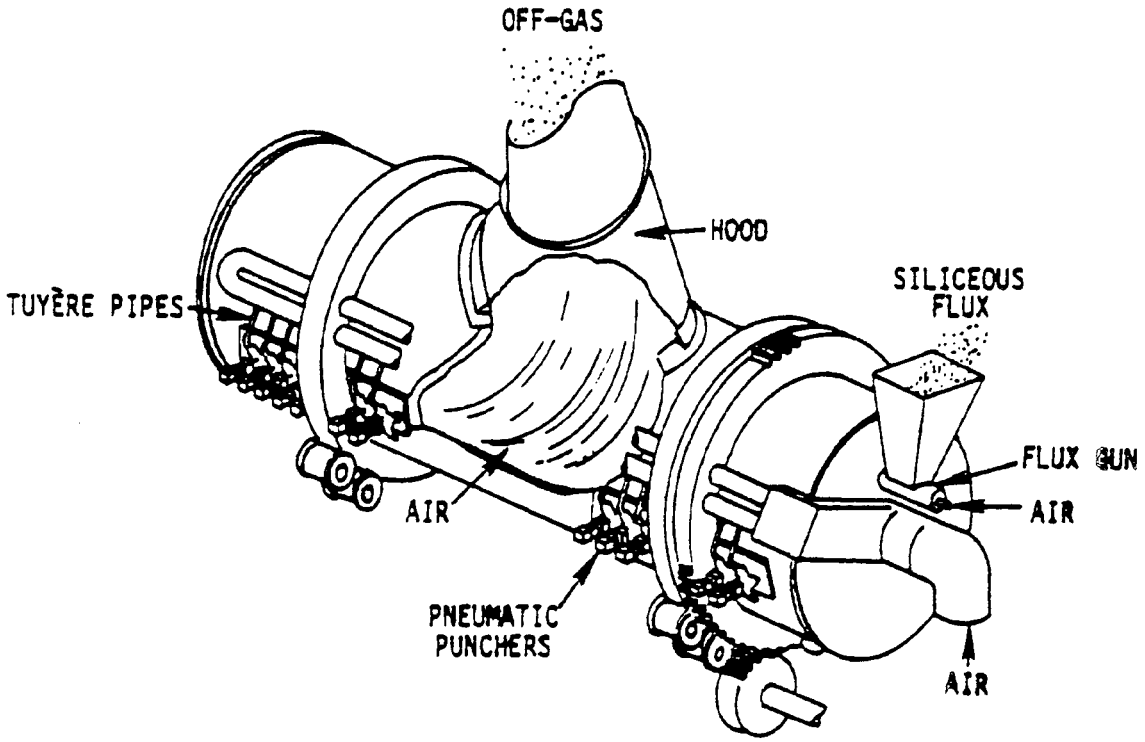

Figure 4-8. Copper Converter

Source: Reference 31.

operating and maintenance practices employed. Typically, lead will be emitted as PM. In addition, actual lead emissions will vary depending on the quantity of lead introduced to the smelter with the copper-bearing feed materials. The available emission factors for smelting and converting are presented in Table 4-5. No factors are available for refining.

In addition to process emissions, significant quantities of fugitive emissions are also generated during material handling operations and furnace charging and tapping. Fugitive particulates emitted from primary copper smelting consist primarily of metallic oxides and dust. Major sources of fugitive emissions are shown in Figure 4-9. Principal sources include ore concentrate unloading and handling, calcine transfer operations, furnace tapping operations, and converter charging and skimming operations. Information on chemical characteristics of fugitive particulate, including lead content, from a variety of these sources is presented in Table 4-6. The data illustrated in the table suggest that the principal source of fugitive lead emissions may be the converters, with fugitive particulate emissions containing 2 to 6 percent lead.[18]

4.3.4 Emission Control Techniques

Control devices for particulate emissions from smelting and converting operations typically consist of a dry (plate/wire) ESP, baghouses, scrubbers, and a wet (tube/wire) acid mist ESP (to remove sulfuric acid and volatile heavy metals that condense during the cooling process).

The control techniques applied vary depending on smelter configuration, process equipment mix, emissions characteristics, and feasibility for SO_2 control. Off-gases from smelting equipment that produce relatively high concentrations of SO_2 (greater than 4 percent; includes fluidized-bed roasters, non-reverberatory smelting furnaces, and converters) are generally treated in single- or double-contact sulfuric acid plants for SO_2 removal.

TABLE 4-5. LEAD EMISSION FACTORS FOR PRIMARY COPPER SMELTING FACILITIES

SCC Number	Emission Source	Control Device	Average Emission Factor[a] in lb/ton (kg/Mg)	Emission Factor Rating
3-03-005-03	Smelting	None	7.2×10^{-2} (3.0×10^{-2})	C
3-03-005-04	Converter	None	2.7×10^{-1} (0.135)	C

Source: Reference 32

[a] Emission factors are expressed in lb (kg) of pollutant emitted per ton (Mg) of concentrated ore processed and represent total process and fugitive emissions.

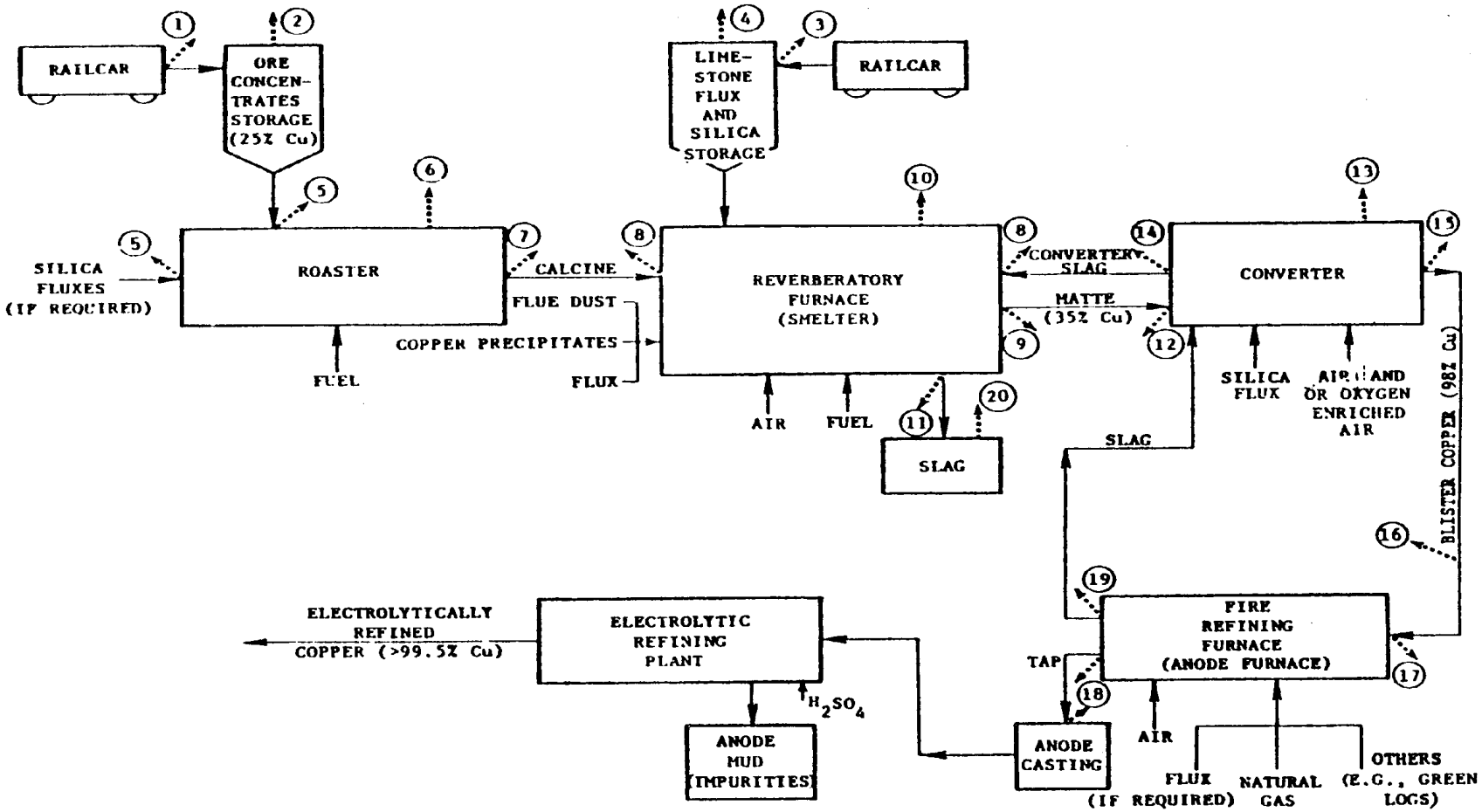

Figure 4-9. Fugitive Emission Sources at Primary Copper Smelters

Source: Reference 27.

TABLE 4-6. CHEMICAL CHARACTERISTICS OF FUGITIVE PARTICULATE EMISSIONS FROM VARIOUS SOURCES AT PRIMARY COPPER SMELTERS

	Composition (%)							
Process Step	Cu	Fe	S	SiO_2	Zn	Cd	Pb	Other
Ore concentrate storage and handling	28	24	32	11			0.3	5
Slag handling	0.5	40	1.5	38			0.3 - 18	20
Roaster loading and operation	5				16		0.3 - 18	0.5
Reverberatory furnace loading and operation	5				16		0.4 - 18	0.5
Matte transfer	42	32	25	1			0.25	
Converter loading and blowing	1				8	4	2 - 6	

Source: Reference 18

Fugitive emissions produced by the majority of smelter fugitive sources, including ore concentrate handling, calcine transfer, and furnace tapping (matte and slag), are controlled by enclosing the fugitive emission points in a hood and exhausting the captured emissions to a control device for collection. Fugitive emissions associated with converter operations are much more difficult to control. These emissions are substantial and occur during charging, skimming, or pouring operations when the converter mouth is rotated out from under the primary hood. They also result from primary hood leakage. Control techniques for converter fugitive emissions include secondary hoods of various designs and ventilating the converter building to a control device. All plants currently operating have hooding at all smelting furnace/vessel matte and slag tapping points. Six of the eight plants in operation have both primary and secondary hoods on Pierce-Smith converters.[27]

4.4 SECONDARY COPPER PRODUCTION

4.4.1 Source Description

The secondary copper industry processes scrap metals to recover copper. Products include refined copper or copper alloys in forms such as ingots, wirebar, anodes, and shot. Copper alloys are combinations of copper and other materials, commonly tin, zinc, and lead. Also, for special applications, combinations include such metals as cobalt, manganese, iron, nickel, cadmium, and beryllium, and non-metals such as arsenic and silicon. A list of secondary copper smelters currently operating within the United States is provided in Table 4-7. Secondary copper capacity totaled 529,100 tons (479,000 Mg) in 1992.[33] Except where otherwise indicated, this section is derived from Section 12.9 of AP-42.[34]

4.4.2 Process Description

The principal processes involved in copper recovery are scrap metal pretreatment and smelting. Pretreatment includes cleaning and concentration to prepare the material for the smelting furnace. Smelting involves heating and treating the scrap to achieve separation and purification of specific metals.

The feed material used in the recovery process can be any metallic scrap containing a useful amount of copper, bronze (copper and tin), or brass (copper and zinc). Traditional forms are punchings, turnings and borings, defective or surplus goods, metallurgical residues such as slags, skimmings, and drosses, and obsolete, worn-out, or damaged articles, including automobile radiators, pipe, wire, bushings, and bearings.

The type and quality of the feed material determines the processes the smelter will use. Due to the large variety of feed materials available, the method of operation varies greatly among plants. Generally, a secondary copper facility deals with less pure raw materials and produces a more refined product, whereas brass and bronze alloy processors take cleaner scrap

TABLE 4-7. DOMESTIC SECONDARY COPPER PRODUCERS

Smelter	1992 Capacity, tons (Mg)
Cerro Copper Products, Sauget, IL	77,000 (70,000)
Chemetco (Concorde Metals), Alton, IL	148,000 (135,000)
Franklin Smelting and Refining, Philadelphia, PA	17,600 (16,000)
Gaston Recycling Industries, Gaston, SC	121,000 (110,000)
Scrapwire Co., Carrolton, GA	115,500 (105,000)
Cyprus Casa Grande Corp., Lakeshore, AZ	49,500 (45,000)

Source: Reference 33

and do less purification and refining. Figure 4-10 is a flowsheet depicting the major processes that can be expected in a secondary copper-smelting operation.

Pretreatment of the feed material can be accomplished using several different procedures, either separately or in combination. Feed scrap is concentrated by manual and mechanical methods, such as sorting, stripping, shredding, and magnetic separation. Feed scrap is sometimes briquetted in a hydraulic press. Pyrometallurgical pretreatment may include sweating, burning off insulation (especially from wire scrap), and drying (burning off oil and volatiles) in rotary kilns. Hydrometallurgical methods include floatation and leaching, with chemical recovery.

In smelting, low-grade scrap is smelted in a cupola furnace, producing "black copper" (70 to 80 percent Cu) and slag; these are often separated in a reverberatory furnace. From here, the melt is transferred to a converter or electric furnace to produce "blister" copper, which is 90 to 99 percent Cu. The actual temperature at which the smelting takes place is not known. However, the operating temperatures are probably not significantly different from that of primary copper-smelting operations (1200°F [650°C]).

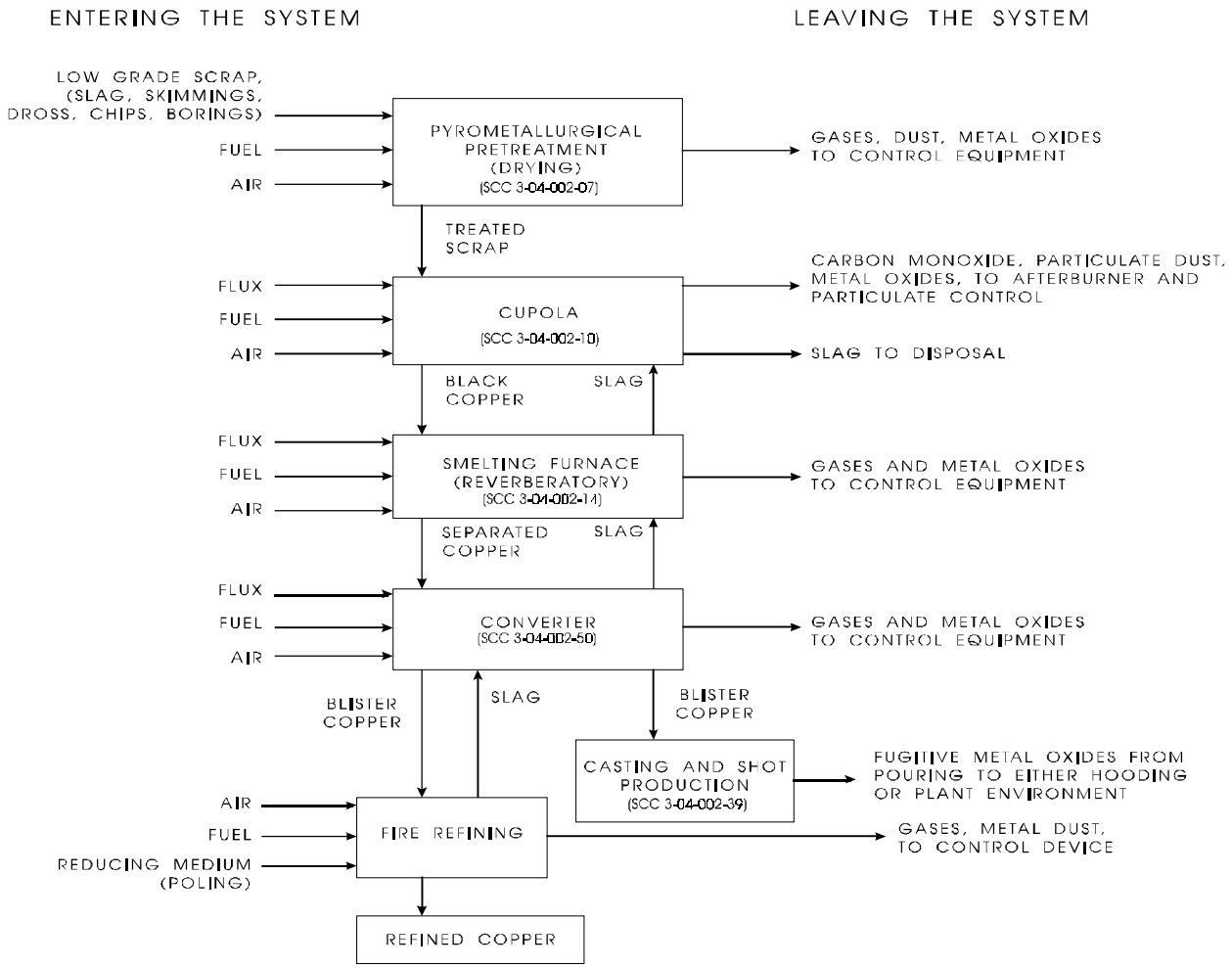

Figure 4-10. Secondary Copper Smelting Processes

Source: Reference 34.

Blister copper may be poured to produce shot or castings, but is often further refined electrolytically or by fire refining. The fire-refining process is essentially the same as that described for the primary copper-smelting industry. The sequence of events in fire refining is the following: (1) charging, (2) melting in an oxidizing atmosphere, (3) skimming the slag, (4) blowing with air or oxygen, (5) adding fluxes, (6) "poling" or otherwise providing a reducing atmosphere, (7) reskimming, and (8) pouring.

To produce bronze or brass, rather than copper, an alloying operation is required. Clean, selected bronze and brass scrap is charged to a melting furnace with alloying metals to bring the resulting mixture to the desired final composition. Fluxes are added to remove impurities and to protect the metal against oxidation by air. Air or oxygen may be blown through the melt to adjust the composition by oxidizing excess zinc.

With zinc-rich feed, such as brass, the zinc oxide concentration in the exhaust gas is sometimes high enough to make recovery for its metal value desirable. This process is accomplished by vaporizing the zinc from the melt at high temperatures and then capturing the oxide downstream in a process fabric filter.

The final step is always casting the alloyed or refined metal into a desired form, e.g., shot, wirebar, anodes, cathodes, ingots, or other cast shapes. The metal from the melt is usually poured into a ladle or a small pot (which serves as a surge hopper and a flow regulator) and then continues into a mold.

4.4.3 Emission Control Techniques

The principal pollutant emitted from secondary copper smelting activities is PM in various forms. Removing insulation from wire by burning produces particulate emissions of metal oxides and unburned insulation. Drying chips and borings to remove excess oils and cutting fluids can result in large amounts of dense smoke consisting of soot and unburned hydrocarbons. Particulate emissions from the top of a cupola furnace consist of metal oxide fumes, dirt, and dust from limestone and coke.

The smelting process uses large volumes of air to oxidize sulfides, zinc, and other undesirable constituents of the feed. This procedure generates considerable particulate matter in the exhaust gas stream. The wide variation among furnace types, charge quality, extent of pretreatment, and size of the charge is reflected in a broad spectrum of particle sizes and variable grain loadings in the exhaust gases. One major factor contributing to differences in emission rates is the amount of zinc present in scrap feed materials; due to its low boiling point, zinc evaporates and combines with oxygen, producing zinc oxide fumes.

Metal oxide fumes from furnaces used in secondary copper smelters may be controlled by fabric filters, ESPs, or wet scrubbers. Control efficiency by fabric filters may be higher than 99 percent, but cooling systems are needed to prevent the hot gases from damaging or destroying the bag filters. A two-stage system using both water jacketing and radiant cooling is common. Electrostatic precipitators are not as well suited to this application, having a low-collection efficiency for dense particulates, such as oxides of lead and zinc. Wet scrubber installations also are relatively ineffective in the secondary copper industry. Scrubbers are useful mainly for particles larger than 1 micron, but the metal oxide fumes are generally submicron in size.

Particulate emissions associated with drying kilns can be similarly controlled. Drying temperatures up to 302°F (150°C) produce relatively cool exhaust gases, requiring no precooling for control by fabric filters.

Wire burning generates large amounts of particulate matter, primarily unburned combustibles. These emissions can be effectively controlled by direct-flame afterburners, with an efficiency of 90 percent or better if the afterburner combustion temperature is maintained above 1,800°F (1,000°C). If the insulation contains chlorinated organics, such as polyvinyl chloride, hydrogen chloride gas will be generated and will not be controlled by the afterburner.

One source of fugitive emissions in secondary smelter operations is charging scrap into furnaces containing molten metals. This often occurs when the scrap being processed is not sufficiently compacted to allow a full charge to fit into the furnace prior to heating. The

introduction of additional material onto the liquid metal surface produces significant amounts of volatile and combustible materials and smoke, which can escape through the charging door. Briquetting the charge offers a way to avoid fractional charges. When fractional charging cannot be eliminated, fugitive emissions are reduced by shutting off the furnace burners during charging. This reduces the flow of exhaust gases and enhances the ability of the exhaust control system to handle the emissions.

Metal oxide fumes are generated not only during melting, but also during pouring of the molten metal into the molds. Other dusts may be generated by the charcoal, or other lining used in association with the mold. Covering the metal surface with ground charcoal is a method used to make "smooth-top" ingots. This process creates a shower of sparks, releasing emissions into the plant near the furnace and the molds being filled.

4.4.4 Emissions

Lead may be present in the scrap metals that are processed to recover secondary copper, therefore, lead emissions can be expected from secondary copper-smelting operations. Generally, lead will be emitted as particulate matter. Lead emission factors are presented in Table 4-8.

4.5 PRIMARY ZINC SMELTING

4.5.1 Source Description

Zinc is found primarily as the sulfide ore sphalerite (ZnS). Its common coproduct ores are lead and copper. Metal impurities commonly associated with ZnS are cadmium and minor quantities of germanium, gallium, indium, and thallium.[35]

Four primary zinc smelters were in operation in the United States in 1992. Three of the smelters employed the electrolytic smelting process and one employed a pyrometallurgical

TABLE 4-8. LEAD EMISSION FACTORS FOR SECONDARY COPPER SMELTING FACILITIES

SCC Number	Emission Source	Control Device	Average Emission Factor in lb/ton (kg/Mg)[a]	Emission Factor Range in lb/ton (kg/Mg)[a]	Emission Factor Rating	Reference
3-04-002-42	Reverberatory Furnace (charge with other alloy [7%])	None	5.0 (2.5)	---	B	34
3-04-002-43	Reverberatory Furnace (charge with high lead [58%])	None	5.0×10^{1} (2.5×10^{1})	---	B	34
3-04-002-44	Reverberatory Furnace (charge with red/yellow brass)	None	1.32×10^{1} (6.6)	---	B	34
3-04-002-xx	Secondary Copper - smelting	Baghouse	1.00×10^{-3} (5.00×10^{-4})[b]	---	B	37

[a] Emission factors are expressed in lb (kg) of pollutant emitted per ton (Mg) of product, except as noted.
[b] Emission factor is expressed in lb (kg) of pollutant emitted per ton (Mg) of material processed.

"---" means data not available.

process. Table 4-9 lists the four U.S. smelters according to their process type and slab zinc production.[36]

4.5.2 Process Description

A general diagram of the electrolytic process is presented in Figure 4-11. Electrolytic processing involves four major steps: roasting, leaching, purification, and electrolysis.

Roasting is common to both electrolytic and pyrometallurgical processing. Calcine is produced by the roasting reactions in any one of three types of roasters: multiple-hearth, suspension, or fluidized-bed. Multiple-hearth roasters are the oldest technology; fluidized-bed roasters are the most modern. Fluidized-bed roasters are currently the only type of roasting process used in the United States. The primary zinc-roasting reaction occurs between 1,184 and 1,832°F (640 and 1,000°C), depending on the type of roaster used. The reaction is the following:

$$2\ ZnS + 3\ O_2 \rightarrow 2\ ZnO + 2\ SO_2 \qquad (2)$$

TABLE 4-9. DOMESTIC PRIMARY ZINC PRODUCERS

Company	Type of Process	1992 Slab Zinc Production Capacity, ton (Mg)
Big River Zinc Co., Sauget, IL	Electrolytic	90,200 (82,000)
Jersey Miniers Zinc Co., Clarksville, TN	Electrolytic	107,800 (98,000)
Zinc Corporation of America, Bartlesville, OK	Electrolytic	56,100 (51,000)
Zinc Corporation of America, Monaca, PA	Pyrometallurgical	135,300 (123,000)

Source: Reference 36

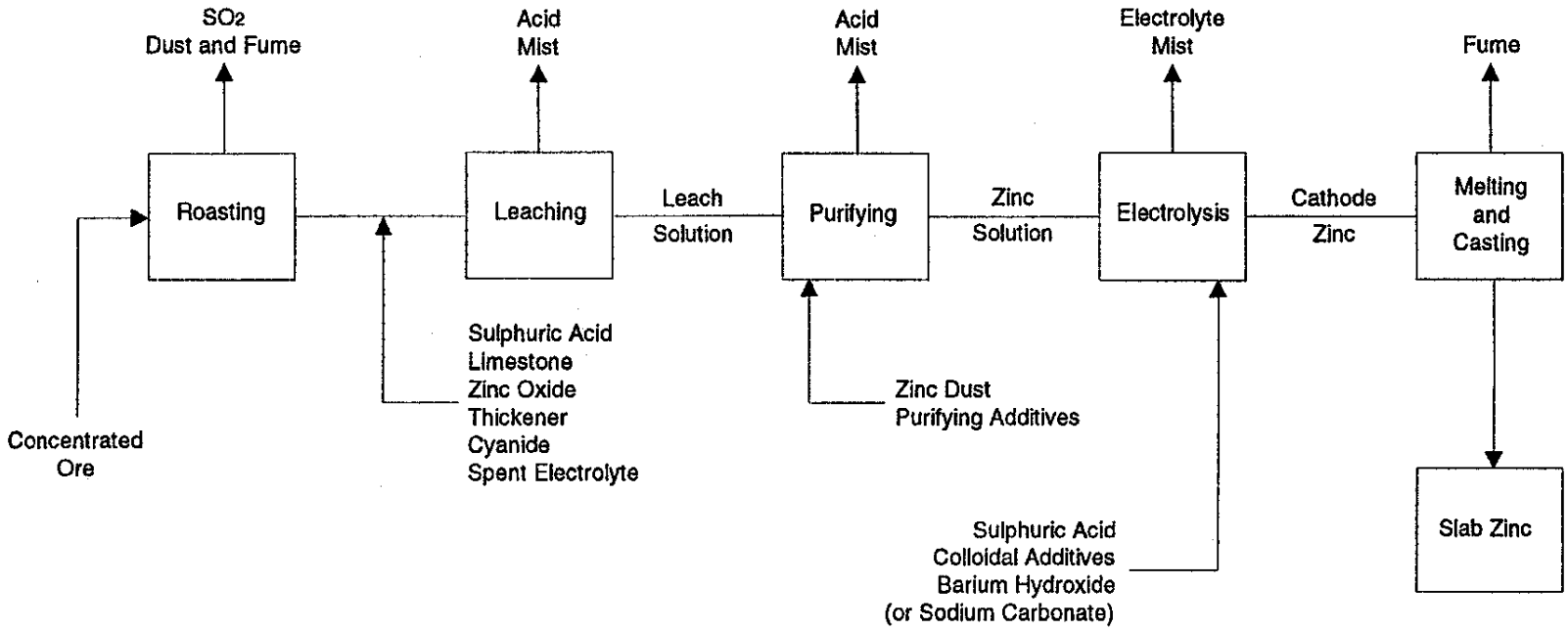

950208-kl-DRTP

Figure 4-11. Electrolytic Primary Zinc-Smelting Process

Source: Reference 35.

In a multiple-hearth roaster, the concentrate is blown through a series of nine or more hearths stacked inside a brick-lined cylindrical column. As the feed concentrate drops through the furnace, it is first dried by the hot gases passing through the hearths and then oxidized to produce calcine. The reactions are slow and can only be sustained by the addition of fuel.

In a suspension roaster, the feed is blown into a combustion chamber, which is very similar to that of a pulverized coal furnace. Additional grinding, beyond that required for a multiple-hearth furnace, is normally required to ensure that heat transfer to the material is fast enough to initiate desulfurization and oxidation reactions in the furnace chamber. Hearths at the bottom of the roaster capture the larger particles, which need more time in the furnace to complete the reactions.

In a fluidized-bed roaster, finely ground sulfide concentrates are suspended and oxidized within a pneumatically supported feedstock bed. This technique achieves the lowest sulfur content calcine of the three roaster designs.

Suspension and fluidized-bed roasters are superior to multiple-hearth roasters for several reasons. Although they emit more particulate, their reaction rates are much faster, allowing greater process rates. Also, the SO_2 content of the effluent streams of these two roasters is significantly higher, permitting more efficient and economical use of acid plants to control SO_2 emissions.

Leaching is the first step of electrolytic reduction. In this step, the zinc oxide reacts with sulfuric acid to form aqueous zinc sulfate in an electrolytic solution.

$$ZnO + H_2SO_4 \rightarrow Zn^{+2}\,(aq) + SO_4^{-2}\,(aq) + H_2O \qquad (3)$$

Single- and double-leach methods can be used, although the former exhibits excessive sulfuric acid losses and poor zinc recovery. In double leaching, the calcine is first leached in a neutral solution. The readily soluble sulfates from the calcine dissolve, but only a

portion of the zinc oxide enters the solution. The calcine is then leached in the acidic electrolysis recycle electrolyte. The zinc oxide is dissolved as shown in reaction (3), as are many of the impurities, especially iron. The electrolyte is neutralized by this process and it serves as the leach solution for the first stage of calcine leaching. This recycling also serves as the first stage of refining because much of the dissolved iron precipitates out of the solution. Variations on this basic procedure include the use of progressively stronger and hotter acid baths to bring as much of the zinc into solution as possible.

Purification is a process in which a variety of reagents are added to the zinc-laden electrolyte to force impurities to precipitate. The solid precipitates are separated from the solution by filtration. The techniques that are used are among the most advanced industrial applications of inorganic solution chemistry. Processes vary from smelter to smelter and the details are proprietary and often patented. Metallic impurities such as arsenic, antimony, cobalt, germanium, nickel, and thallium interfere severely with the electrolytic deposition of zinc, and their final concentrations are limited to less than 4×10^{-7} lb/gal (0.05 mg/L).

Electrolysis takes place in tanks, or cells, containing a number of closely spaced rectangular metal plates that act as anodes (made of lead with 0.75 to 1.0 percent silver) and as cathodes (made of aluminum). A series of three major reactions occurs within the electrolysis cells:

$$2\ H_2O \xrightarrow[\text{anode}]{H_2SO_4} 4H^+(aq) + 4e^- + O_2 \tag{4}$$

$$2\ Zn^{+2} + 4e^- \xrightarrow{\text{cathode}} Zn^\circ \tag{5}$$

$$4\ H^+\ (aq) + 2\ SO_4^{-2}\ (aq) \longrightarrow 2\ H_2SO_4 \tag{6}$$

Oxygen gas is released at the anode, metallic zinc is deposited at the cathode, and sulfuric acid is regenerated within the electrolyte.

Electrolytic zinc smelters contain a large number of cells-often several hundred. A portion of the electrical energy released in these cells dissipates as heat. The electrolyte is continuously circulated through cooling towers, both to lower its temperature and to concentrate the electrolyte through the evaporation of water. Routinely, half of the cathodes in a cell are disengaged for removal of zinc from the plates. The other half carry a higher current load. Occasionally, a complete cell shutdown occurs, such as when a cell is bypassed (using a Buss Bar to reroute current) for cleaning or repairing.

The final stage of electrolytic zinc smelting is the making and casting of the cathode zinc into small slabs (59 lb [27 kg]) or large slabs (1,408 to 2,420 lb [640 to 1,100 kg]).

A general diagram of the pyrometallurgical process is presented in Figure 4-12. Pyrometallurgical processing involves three major steps: roasting, sintering, and retorting.

Sintering is the first stage of the pyrometallurgical reduction of zinc oxide to slab zinc. Sintering removes lead and cadmium impurities by volatilization and produces an agglomerated permeable mass suitable for feed to retorting furnaces. Down-draft sintering machines of the Dwight-Lloyd type are used in the industry. Grate pallets are joined together for a continuous conveyor system. Combustion air is drawn down through the grate pallets and is exhausted to a particulate control system. The feed is a mixture of calcine, recycled sinter, and coke breeze, which is low-sulfur fuel. Having a low boiling point, oxides of lead and cadmium are volatilized from the sinter bed and are recovered in the particulate control system.

In retorting, because of the low boiling point of metallic zinc (1,663°F [906°C]), reduction and purification of zinc-bearing minerals can be accomplished to a greater extent than with most minerals. The sintered zinc oxide feed is brought into a high-temperature reducing atmosphere of 1,652 to 2,730°F (900 to 1,499°C). Under these conditions, the zinc oxide is simultaneously reduced and volatilized to gaseous zinc:

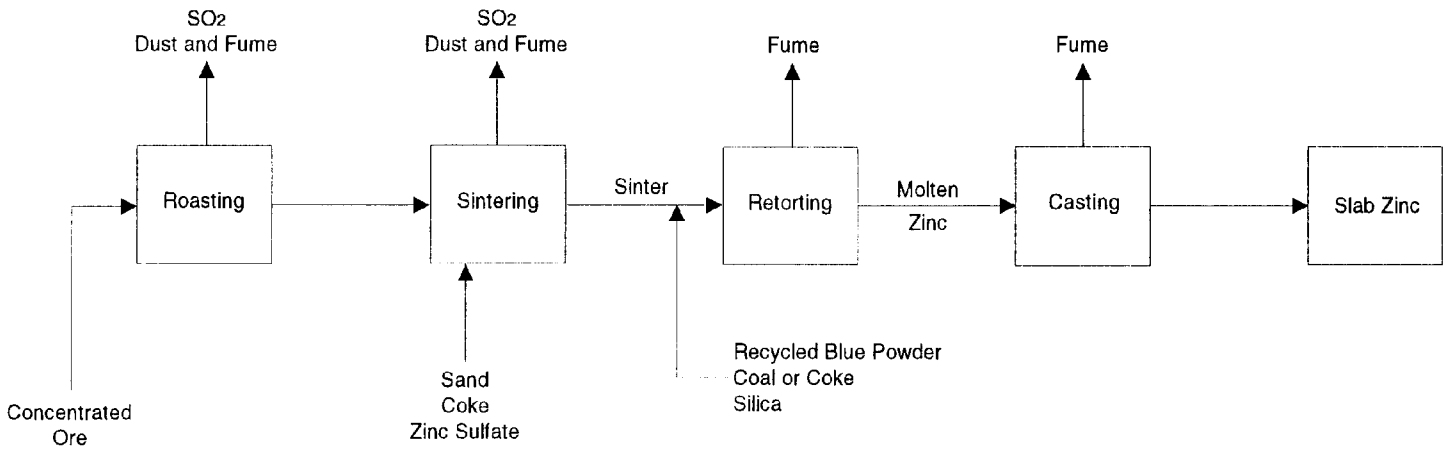

950209-kl-DRTP

Figure 4-12. Pyrometallurgical Primary Zinc-Smelting Process

Source: Reference 35.

$$ZnO + CO \rightarrow Zn\ (vapor) + CO_2 \quad (7)$$

Carbon monoxide regeneration also occurs:

$$CO_2 + C \rightarrow 2\ CO \quad (8)$$

The zinc vapor and carbon monoxide that are produced pass from the main furnace to a condenser, where zinc recovery is accomplished by bubbling the gas mixture through a molten zinc bath. Retorting furnaces can be heated either externally by combustion flames or internally by electric resistance heating. The latter approach, electrothermic reduction, is the only method currently practiced in the United States, and it has greater thermal efficiency than do external heating methods. In a retort furnace, preheated coke and sinter, silica, and miscellaneous zinc-bearing materials are fed continuously in the top of the furnace. Feed coke serves as the principal electrical conductor, producing heat; it also provides the carbon monoxide required for zinc oxide reduction. Further purification steps can be performed on the molten metal collected in the condenser. The molten zinc finally is cast into small slabs (59 lb [27 kg]) or large slabs (1,408 to 2,420 lb [640 to 1,100 kg]).[35]

4.5.3 Emissions

All four smelters treat the SO_2-rich roaster exhaust gases in a sulfuric acid plant for SO_2 removal. As a result, particulate and lead emissions are negligible. The balance of the processes performed at the electrolytic plants are wet and do not produce emissions. Uncontrolled emissions from electrothermic reduction furnaces are also negligible. Thus, the only potentially significant source of particulate and lead emissions from primary zinc smelting operations in the United States is the one sinter machine operated at the pyrometallurgical plant. The sinter machine at this plant is currently controlled by three ESPs and one baghouse in series.[18] Lead emission factors for primary zinc production are not available.

4.6 SECONDARY ALUMINUM OPERATIONS

4.6.1 Source Description

Secondary aluminum operations involve the cleaning, melting, refining, alloying, and pouring of aluminum recovered from scrap, foundry returns, and dross. The processes used to convert scrap aluminum to secondary aluminum products such as lightweight metal alloy for industrial castings and ingots are presented in Figures 4-13 and 4-14. Production involves two general classes of operations: scrap treatment and smelting/refining. Except where otherwise indicated, this section is derived from Section 12.8 of AP-42.[38]

4.6.2 Process Description

Scrap treatment involves receiving, sorting, and processing scrap to remove contaminants and prepare the material for smelting. Processes based on mechanical, pyrometallurgical, and hydrometallurgical techniques are used, and those employed are selected to suit the type of scrap processed.

The smelting/refining operation generally involves the following steps:

a. charging
b. melting
c. fluxing
d. alloying
e. mixing
f. demagging
g. degassing
h. skimming
i. pouring

All of these steps may occur at each facility, with process distinctions being the furnace type used and emissions characteristics. However, as with scrap treatment, not all of these steps are incorporated into the operations at a particular plant. Some steps may be combined or reordered, depending on furnace design, scrap quality, process inputs, and product specifications.

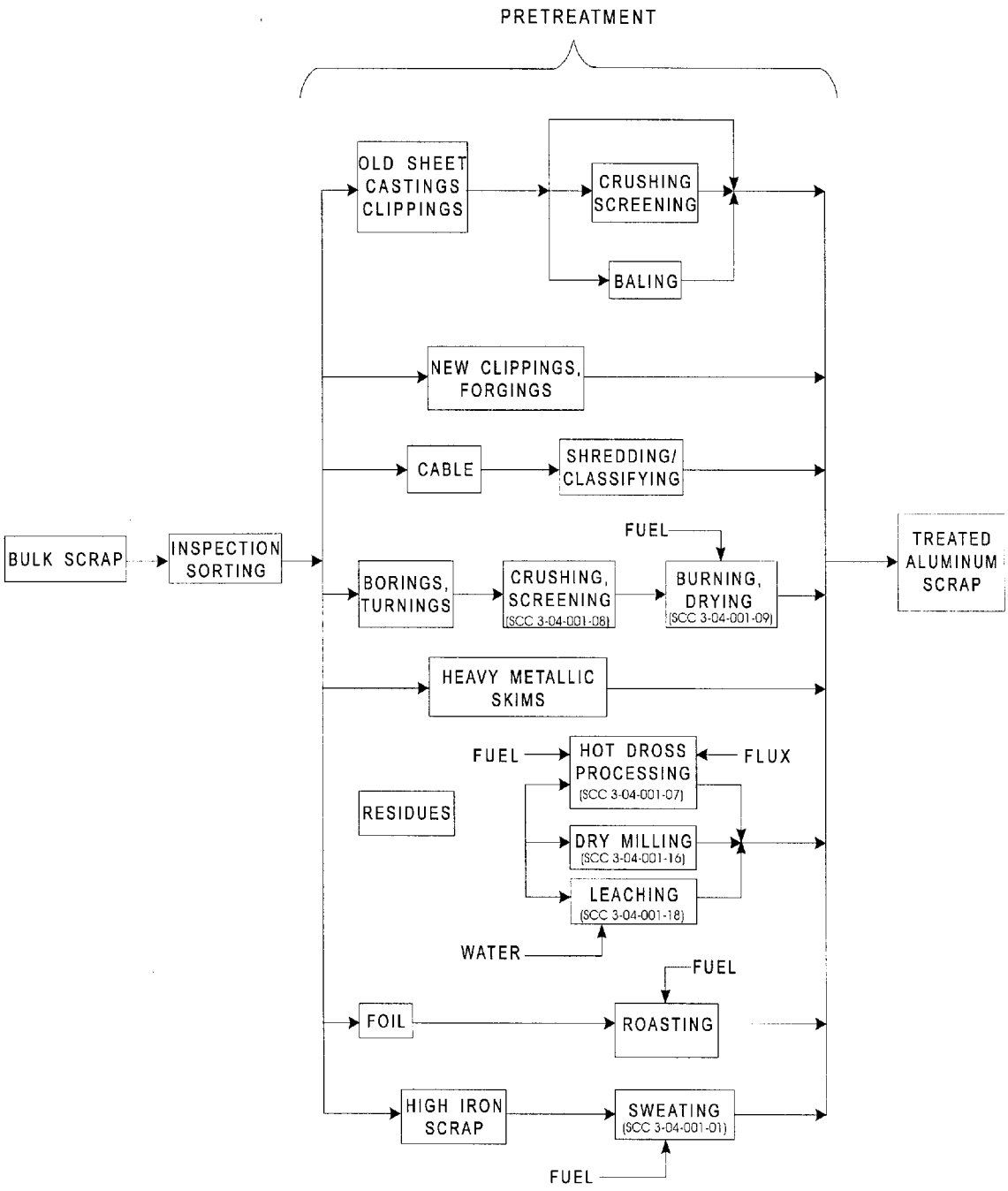

Figure 4-13. Typical Process Diagram for Pretreatment in the Secondary Aluminum Processing Industry

Source: Reference 38.

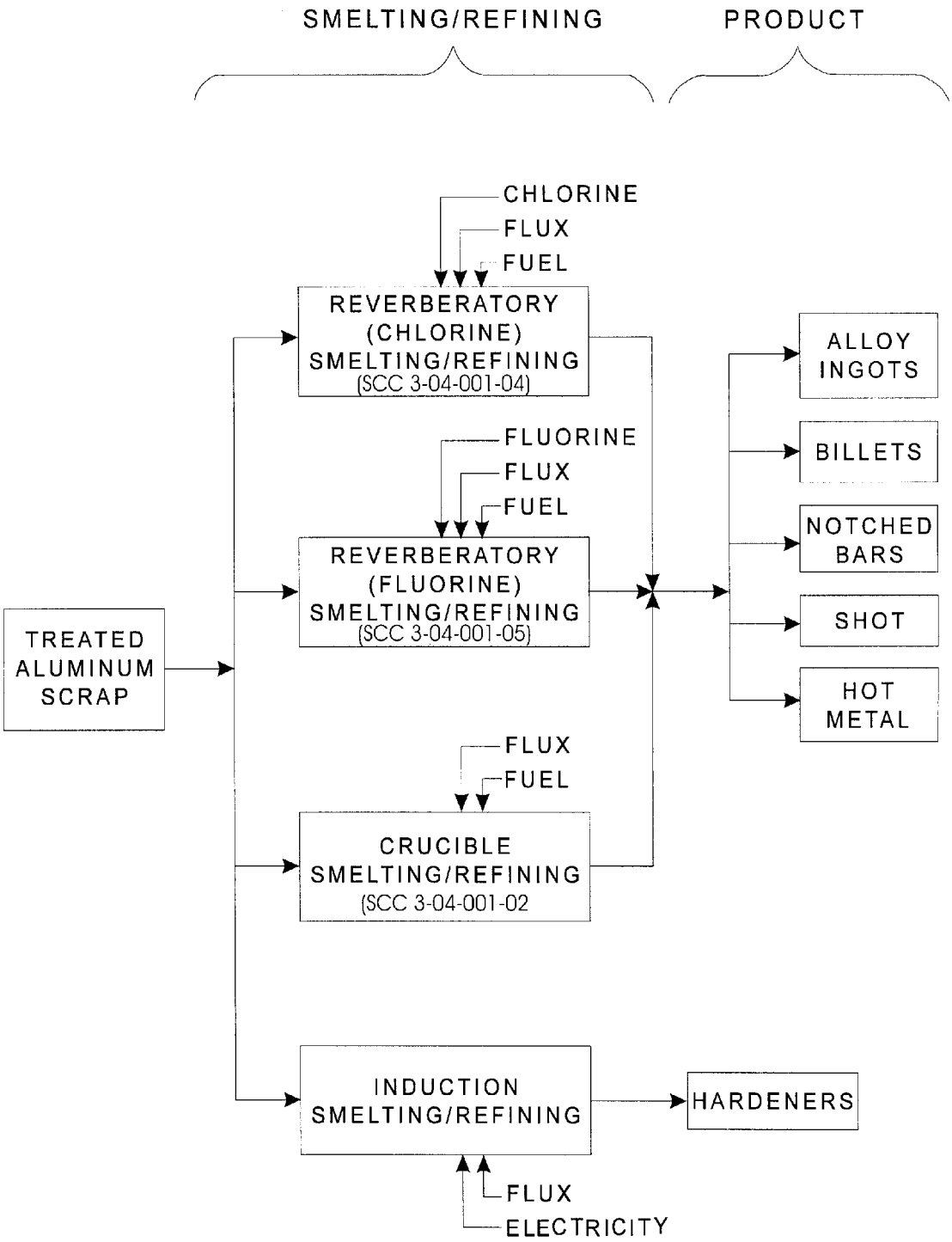

Figure 4-14. Typical Process Flow Diagram for the Secondary Aluminum Processing Industry

Source: Reference 38.

Purchased aluminum scrap undergoes inspection upon delivery and is sorted into the categories shown in Figure 4-13. Clean scrap requiring no treatment is transported to storage or is charged directly into the smelting furnace. The bulk of the scrap, however, must be manually sorted as it passes along a steel belt conveyor. Free iron, stainless steel, zinc, brass, and oversize materials are removed. The sorted scrap then goes to appropriate scrap treating processes, if necessary, or is charged directly to the smelting furnace. The more common scrap treatment processes are discussed in the following paragraphs.

Sorted scrap is conveyed to a ring crusher or hammer mill where the material is shredded and crushed, and the iron is torn away from the aluminum. The crushed material passes over vibrating screens to remove dirt and fines, and tramp iron is removed by magnetic drums and/or belt separators. Baling equipment compacts bulky aluminum scrap into bales.

Pure aluminum cable with steel reinforcement or plastic insulation is cut by alligator-type shears and granulated or further reduced in hammer mills to separate the iron core and the plastic coating from the aluminum. Magnetic processing removes the iron and air classification separates the insulation. Borings and turnings, in most cases, are treated to remove cutting oils, greases, moisture, and free iron. The processing steps involved are (1) crushing, (2) drying to remove oil and moisture, (3) screening to remove aluminum fines, (4) removing iron magnetically, and (5) storing the clean dried borings in tote boxes.

Several types of residue from primary and secondary aluminum plants contain recoverable amounts of aluminum. Aluminum is recovered from hot and cold drosses by batch fluxing in rotary furnaces. In the dry milling process, cold aluminum dross and other residues are processed by milling, screening, and concentrating to reduce oxides and non-metallic materials to fine powders, yielding a product which is 60 to 70 percent aluminum.

Drosses, skimmings, and slags are treated by leaching to remove fluxing salts and other nonrecoverable materials. First, the raw material is fed into a long, rotating drum or an attrition or ball mill, from which soluble contaminants are leached. The washed material is then screened to remove fines and dissolved salts and is dried and passed through a magnetic

separator to remove ferrous materials. The non-magnetic materials are then stored or charged directly to the smelting furnace.

Aluminum foil is treated by roasting to separate carbonaceous materials associated with the aluminum.

Sweating is a pyrometallurgical process using open-flame reverberatory furnaces to recover aluminum from scrap with high iron content. The aluminum and other constituents with low-melting temperatures melt, trickle down the hearth, through a grate, and into molds or collecting pots. The materials with higher-melting temperatures, including iron, brass, and oxidation products formed during the sweating process, remain in the furnace until they are removed. Treated aluminum scrap is transferred to the smelting/refining operations for refinement into finished products.

In smelting/refining operations, reverberatory furnaces are commonly used to convert clean, sorted scrap, sweated pigs, or untreated scrap to ingots, shot, or hot metal. The scrap is first mechanically charged to the furnace, often through charging wells designed to introduce chips and light scrap below the surface of a previously melted charge ("heel"). Batch processing is generally practiced for alloy ingot production, and continuous feeding and pouring are generally used for products having less strict specifications.

Cover fluxes are used to prevent oxidation of the melt caused by air contact. Solvent fluxes react with non-metallic materials, such as burned coating residues and dirt, to form insoluble materials that float to the surface as part of the slag. Alloying agents are charged to the furnace in amounts determined by product specifications. Nitrogen or other inert gases can be injected into the molten metal to help raise dissolved gases (typically hydrogen) and intermixed solids to the surface.

Demagging reduces the magnesium content of the molten charge from approximately 0.3 to 0.5 percent (typical scrap value) to about 0.1 percent (typical product line alloy specification). When demagging with chlorine gas, chlorine is injected under pressure

through carbon lances to react with magnesium and aluminum as it bubbles to the surface. Other chlorinating agents or fluxes, such as anhydrous aluminum chloride or chlorinated organic compounds, are sometimes used.

In the skimming step, contaminated semi-solid fluxes (dross, slag, or skimmings) are ladled from the surface of the melt and removed through the forewell. The melt is then cooled before pouring.

The reverberatory (fluorine) process is similar to the reverberatory (chlorine) smelting/refining process, except that aluminum fluoride (AlF_3) is employed in the demagging step instead of chlorine. The AlF_3 reacts with magnesium to produce molten metallic aluminum and solid magnesium fluoride salt, which floats to the surface of the molten aluminum and is skimmed off.

The crucible smelting/refining process is designed to produce harder aluminum alloys by blending pure aluminum and hardening agents in an electric induction furnace. The process steps include charging scrap to the furnace, melting, adding and blending the hardening agent, skimming, pouring, and casting into notched bars.

4.6.3 Emissions and Emission Control Techniques

Each processing step in the secondary aluminum industry is a potential source of lead emissions, which are generally emitted as PM. Lead emissions will be a small fraction of total particulate emissions and will vary with the lead content of the scrap. Table 4-10 presents lead emission factors for specific processing units.

Data for lead emissions from secondary aluminum processing facilities was extremely limited. Currently, emissions data from secondary aluminum facilities are being

TABLE 4-10. LEAD EMISSION FACTORS FOR SECONDARY ALUMINUM PRODUCTION

SCC Number	Emission Source	Control Device	Emission Factor in lb/ton (kg/Mg)[a]	Emission Factor Range in lb/ton (kg/Mg)[a]	Emission Factor Rating	Reference
3-04-001-09	Burning/Drying	Venturi Scrubber	4.36×10^{-3} (2.18×10^{-3})	2.02×10^{-3} - 7.04×10^{-3} (1.01×10^{-3} - 3.52×10^{-3})	U	39
		Baghouse	1.04×10^{-5} (5.18×10^{-6})	6.76×10^{-6} - 1.48×10^{-5} (3.38×10^{-6} - 7.40×10^{-6})	U	39
		Multiple Cyclones	2.16×10^{-2} (1.08×10^{-2})	2.10×10^{-2} - 2.26×10^{-2} (1.05×10^{-2} - 1.13×10^{-2})	U	40
3-04-001-14	Reverberatory Furnace	Baghouse	1.4×10^{-3} (7.0×10^{-4})[b]	1.0×10^{-3} - 2.2×10^{-3} (5.0×10^{-4} - 1.1×10^{-3})[b]	D	41

[a] Emission factors are expressed in lb (kg) of pollutant emitted per ton (Mg) of aluminum produced, except as noted.
[b] Emission factors are expressed in lb (kg) of pollutant emitted per ton (Mg) of aluminum processed.

collected for inclusion in the secondary aluminum MACT, which may augment the information provided here.

There is potential for particulate emissions from several processing steps, including crushing/screening, shredding/classifying, bailing, burning/drying, dross processing, roasting, smelting/refining, and demagging. Particulate emissions may also be released by leaching operations during drying. Fumes may be emitted from fluxing reactions. Lead emission levels from each of these processes depend on the lead content of the feed introduced to each unit step.

Typical control devices at secondary aluminum operations include baghouses, multicyclones, scrubbers, and local ventilation. Although, these have been designed primarily for PM control, in controlling PM, lead emissions are controlled.

4.7 IRON AND STEEL FOUNDRIES

4.7.1 Source Location

There were approximately 756 iron and steel foundries in the United States in 1992 based on a survey conducted by the EPA to support development of the iron and steel foundry Maximum Achievable Control Technology (MACT) standard.[42] In general, foundries are located in areas of heavy industry and manufacturing, especially areas where iron and steel are produced (e.g., the Great Lakes States).

4.7.2 Process Description

Iron and steel foundries can be defined as those that produce gray, white, ductile, or malleable iron and steel castings. Both cast irons and steels are solid solutions of iron, carbon, and various alloying materials. Although there are many types of iron and steel, groups can be distinguished by their carbon content. Cast iron typically contains 2 percent carbon or greater; cast steel usually contains less than 2 percent carbon.[40]

Iron castings are used in most types of mechanical equipment, including motor vehicles, farm machinery, construction machinery, petroleum industry equipment, electrical motors, and iron and steel industry equipment.

Steel castings are used in motor vehicles, railroad equipment, construction machinery, aircraft, agricultural equipment, ore refining machinery, and chemical manufacturing equipment.[43] Steel castings are classified on the basis of their composition and heat treatment, which determine their end use. Classifications include carbon, low-alloy, general-purpose-structural, heat-resistant, corrosion-resistant, and wear-resistant.

The following four basic operations are performed in all iron and steel foundries:

- Storage and handling of raw materials;
- Melting of scrap or ingot metal;
- Transfer of the hot molten metal into molds; and
- Preparation of the molds to hold the molten metal.

Other processes present in most, but not all, foundries include:

- Sand preparation and handling;
- Mold cooling and shakeout;
- Casting cleaning, heat treating, and finishing;
- Coremaking; and
- Pattern making.

A generic process flow diagram for iron and steel foundries is shown in Figure 4-15. Figure 4-16 identifies the emission points in a typical iron and steel foundry.

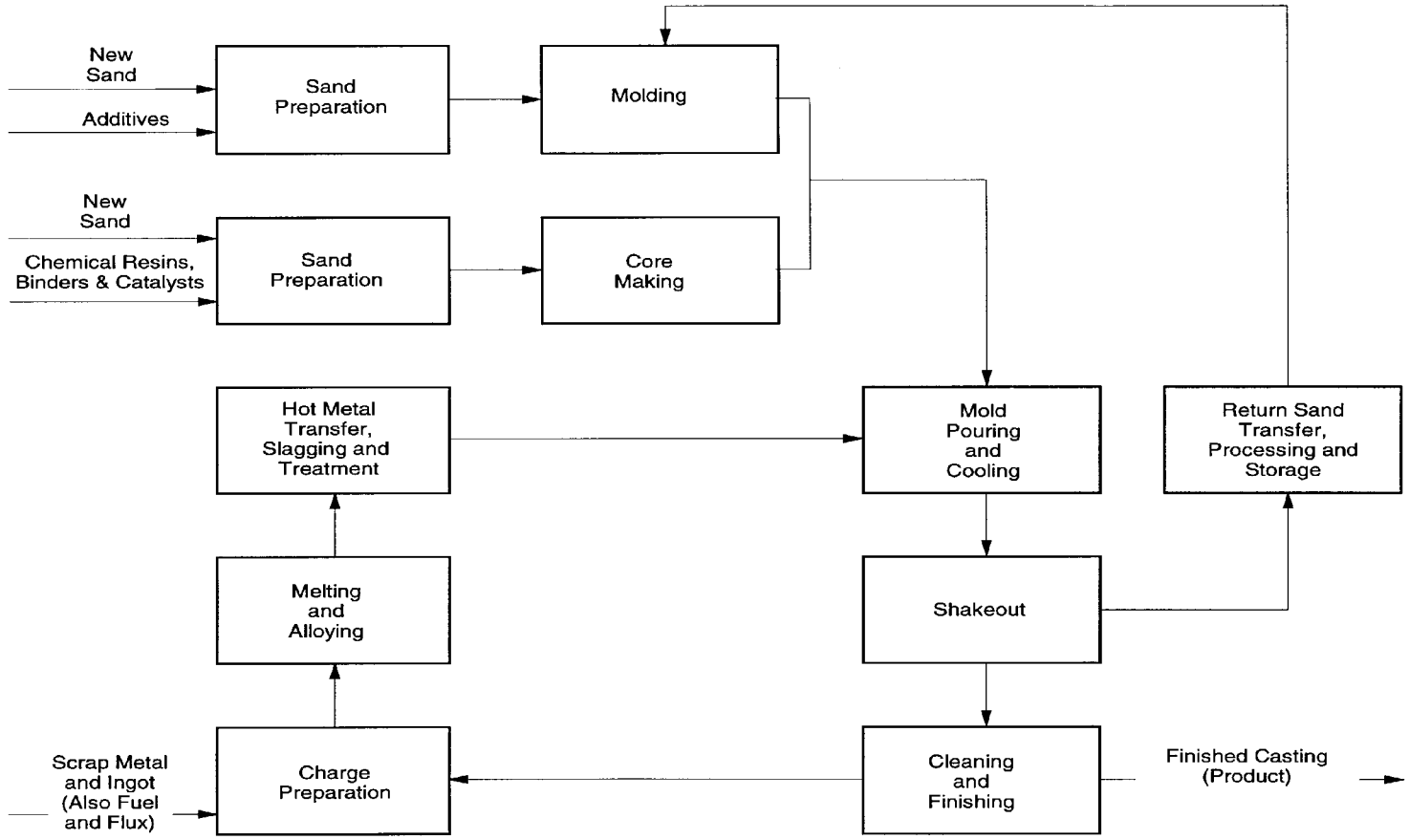

Figure 4-15. Process Flow Diagram for a Typical Sand-Cast Iron and Steel Foundry

Source: Reference 43.

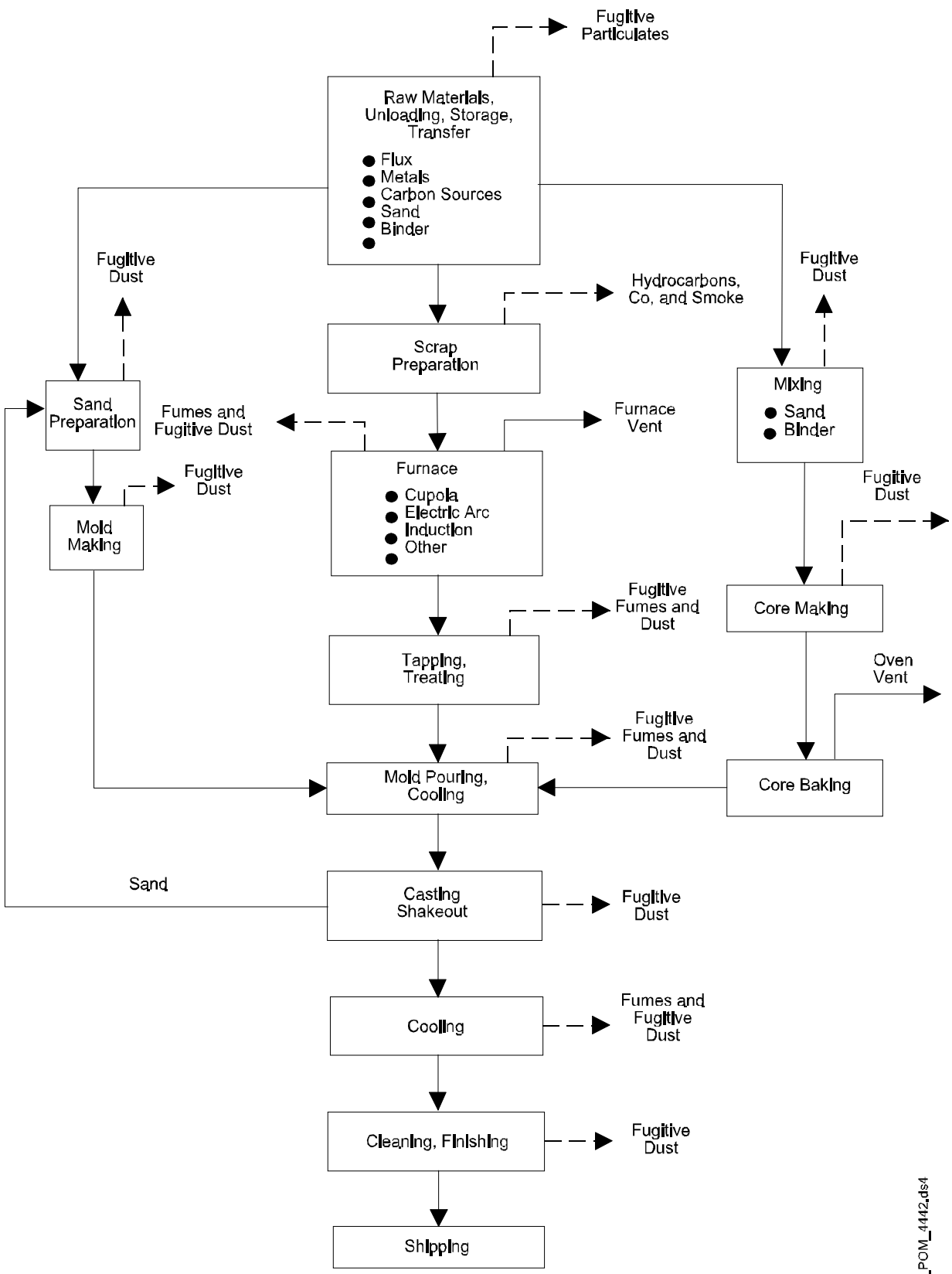

Figure 4-16. Emission Points in a Typical Iron and Steel Foundry

Source: Reference 44

Metal Melting Process

The highest amount of metal (by volume) in iron and steel foundries is melted in cupolas. Electric arc furnaces (EAFs) and induction furnaces are also commonly used. Cupolas are charged with alternate layers of coke, metallics, and fluxes. Combustion air is introduced into the cupola through tuyeres located at the base. The heat produced by the burning coke melts the iron, which flows down and is tapped from the bottom of the cupola. Fluxes combine with non-metallic impurities in the charge and form slag, which is removed through tap holes located above the level of the metal tap hole. Cupola capacities range mostly from 1 to 30 tons (1 to 27 Mg) per hour, with a few large units capable of producing close to 100 tons (90 Mg) per hour. Larger furnaces are operated for several days at a time with inspections and cleanings between melt cycles.[45]

Iron and steel castings are produced in a foundry by injecting or pouring molten metal into cavities of a mold made of sand, metal, or ceramic material. The use of EAFs and induction furnaces is increasing. Steel foundries rely almost exclusively on EAFs or induction furnaces for melting purposes.

In all types of foundries, when the poured metal has solidified, the molds are separated and the castings removed from the mold flasks on a casting shakeout unit. Cutoff, abrasive (shotblasting) cleaning, grinding, and heat treating are performed as necessary. The castings are then inspected and shipped to plants of other industries for machining and/or assembly into final products.[43]

In a typical foundry operation, charges to the melting unit are sorted by size and density and cleaned (as required) prior to being put into the melter. Charges consist of scrap metal, ingot, carbon (coke), and flux. Prepared charge materials are placed in crane buckets, weighed, and transferred into the melting furnace or cupola. The charge in a furnace or cupola is heated until it reaches a certain temperature and the desired product chemistry of the melt has been attained. After the desired product is obtained, the molten metal is poured out of the furnace into various-size transfer ladles and then into the molds holding furnaces.

Mold and Core Production

The casting or mold pouring and cooling operations in iron and steel foundries are suspected to be a source of lead emissions. In addition to casting, mold preparation and casting shakeout (removal from the mold) activities are also suspected as lead emission sources. Lead emissions from these processes are believed to be small, although test data are not available to quantify actual lead emissions.

4.7.3 Emission Control Techniques

Lead emissions depend mostly on the scrap metal quality and control technologies. Control technologies commonly used to control lead emissions from iron and steel foundry metal melting operations include baghouses and wet scrubbers. Additionally, lead emissions due to coke combustion may be reduced by substituting natural gas for coke as a heat source. Potential lead emissions from molding, casting, and shakeout are fugitive in nature. Fugitive emissions from such sources are generally controlled with local hooding or building ventilation systems that are ducted to a control device (predominantly baghouses).[45]

4.7.4 Emissions

Lead emission factors for several iron foundry processes were available. These emission factors are presented in Table 4-11.

4.8 ORE MINING, CRUSHING, AND GRINDING

4.8.1 Source Description

Lead emissions are generated by the mining, crushing, and grinding of three primary nonferrous metal ores: lead, zinc, and copper. Lead and zinc ores are normally mined underground, whereas copper ores are normally mined in open pits.[46] Lead, zinc, and copper occur in various amounts in all three ore types. If the metal content of two or more metals is high

TABLE 4-11. LEAD EMISSION FACTORS FOR IRON AND STEEL FOUNDRIES

SCC Number	Emission Source	Control Device	Emission Factor in lb/ton (kg/Mg)[a]	Emission Factor Range in lb/ton (kg/Mg)[a]	Emission Factor Rating	Reference
3-04-003-01	Iron Foundry - Cupola	None	---	1.00×10^{-1} - 1.10 (5.00×10^{-2} - 1.10)	B	47
		Afterburner/ Venturi Scrubber	1.56×10^{-3} (7.80×10^{-4})[b]	---	U	3
		Baghouse	2.67×10^{-3} (1.34×10^{-3})	1.39×10^{-3} - 4.45×10^{-3} (6.95×10^{-4} - 2.23×10^{-3})	U	48
3-04-003-02	Iron Foundry - Reverberatory Furnace	None	---	1.20×10^{-2} - 1.40×10^{-1} (6.00×10^{-3} - 7.00×10^{-2})	B	47
3-04-003-03	Iron Foundry - Electric Induction Furnace	None	---	9.00×10^{-3} - 1.00×10^{-1} (4.45×10^{-3} - 5.00×10^{-2})	B	47
3-04-003-20	Iron Foundry - Casting	Afterburner/ Venturi Scrubber	4.80×10^{-3} (2.40×10^{-3})[b]	---	U	3

[a] Emission factors are expressed in lb (kg) of pollutant emitted per ton (Mg) of iron/steel produced, except as noted.
[b] Emission factors are expressed in lb (kg) of pollutant emitted per ton (Mg) of material processed.

"---" means data not available.

enough for economical extraction, the ore is listed as a mixed ore (e.g., lead-zinc, copper-lead). Except where otherwise indicated, this section is derived from *Control Techniques for Lead Air Emissions.*[18]

4.8.2 Process Description

Lead, zinc, and copper ores are generally concentrated in a liquid medium using settling and flotation. In all but a few cases, the metal is combined with sulfur and/or oxygen in the ore. Lead, zinc, and copper are usually found together in varying percentages in ore deposits.[46] Depending on the amount of each of these metals in the ore and on the potential economic return, the metals are either separated from the ore or discarded in the tailings.

The ore in the underground mines is disintegrated by light-weight percussive and rotary-percussive drilling machines. Power shovels, front-end loaders, scrapers, and mucking machines load the pulverized ore into electric or diesel-powered motorized trains operating on heavy-gauge tracks, or into trackless shuttle cars. The ore is commonly run through a primary crusher underground and then conveyed by skip loader, rail tram, or conveyor belt (depending on the mine depth) to the surface, where classifying and additional grinding occur. Figure 4-17 illustrates a typical ore crushing and grinding operation.

Lead and zinc ores are concentrated to 45 to 75 percent before going to the smelter. Depending on the mineral and gauge material, the ore is crushed and ground to a size based on an economic balance between the recoverable metal values and the cost of grinding. Standard jaw, gyratory, and cone crushers, vibrating or trommel screens, and rod and ball mills are used to reduce the ore to powder in the 65- to 325-mesh range. Through gravity and/or selective flotation, the finely divided particles of copper, lead, and zinc are separated from the gangue and are cleaned, thickened, filtered, and dried.

Copper ores are handled in essentially the same manner as zinc and lead ores. Open-pit mining for copper, copper-lead, copper-zinc, and copper-lead-zinc ores is centered

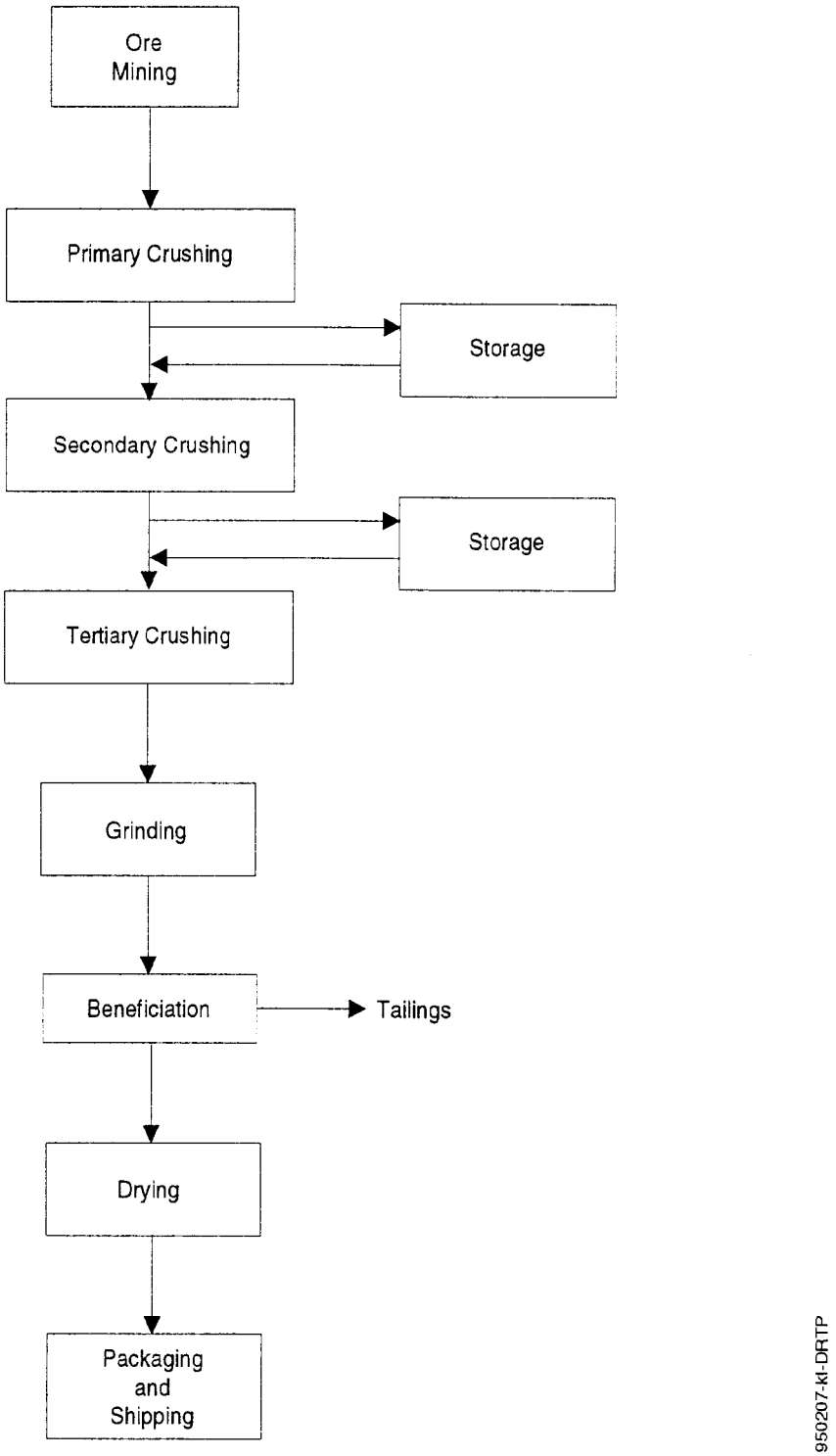

Figure 4-17. Process Diagram for Ore Mining and Crushing

Source: Reference 46.

primarily in the Western U.S. in arid or semi-arid areas. The ore and gangue are loosened and pulverized by explosives, scooped up by power shovels or other mechanical equipment, and loaded into trucks, rail trains, or cars for transport to the concentrator. The ore is then processed in the same manner as lead and zinc ores.

4.8.3 Emissions

Lead emissions are basically fugitive in nature and are caused by drilling, blasting, loading, conveying, screening, unloading, crushing, and grinding operations.[46] The emissions from actual ore mining operations are contained in underground mines. Lead emission factors from available literature sources are presented in Table 4-12. Lead emissions from lead, copper, or zinc ore mining are dependent upon the lead content of the ore. Ores with greater lead content produce greater lead emission factors. Mixed-ore mining produces relatively constant emission rates, although the lead content of the ore varies.

4.8.4 Emission Control Techniques

Because of the diversity of particulate emission sources in ore mining and operations, a variety of control methods and techniques have been used. Dust-suppression techniques are the most commonly used. They are designed to prevent PM from becoming airborne and are applicable to both process and fugitive dust sources. Particulate emissions such as those generated by crushing operations can be captured using local hooding and ventilation and collected in control devices. Emission sources and applicable control options are listed in Table 4-13.

4.9 BRASS AND BRONZE PROCESSING

4.9.1 Source Description

Brass and bronze are generally considered to be copper-based alloys, with zinc, tin, and other metals such as lead, aluminum, manganese, and silicon as secondary components.

TABLE 4-12. LEAD EMISSION FACTORS FOR LEADBEARING ORE CRUSHING AND GRINDING

SCC Number	Emission Source	Control Device	Emission Factor in lb/ton (kg/Mg)[a]	Emission Factor Range in lb/ton (kg/Mg)[a]	Emission Factor Rating
3-03-031-01	Lead Ore (5.1% Pb content)	None	3.00×10^{-1} (1.50×10^{-1})	---	B
3-03-031-02	Zinc Ore (0.2% Pb content)	None	1.20×10^{-2} (6.00×10^{-3})	---	B
3-03-031-03	Copper Ore (0.2% Pb content)	None	1.20×10^{-2} (6.00×10^{-3})	---	B
3-03-031-04	Lead-Zinc Ore (2.0% Pb content)	None	1.20×10^{-1} (6.00×10^{-2})	---	B
3-03-031-05	Copper-Lead Ore (2.0% Pb content)	None	1.20×10^{-1} (6.00×10^{-2})	---	B
3-03-031-06	Copper-Zinc Ore (0.2% Pb content)	None	1.20×10^{-2} (6.00×10^{-3})	---	B
3-03-031-07	Copper-Lead-Zinc Ore (2.0% Pb content)	None	1.20×10^{-1} (6.00×10^{-2})	---	B

Source: Reference 49

[a] Emission factors are expressed in lb (kg) of pollutant emitted per ton (Mg) of ore processed.

"---" means data not available.

TABLE 4-13. EMISSION SOURCES AND CONTROL DEVICES

Operation or Source	Control Options
Drilling	Liquid injection (water or water plus a wetting agent) Capturing and venting emissions to a control device
Blasting	No control Good blasting practices
Loading	Water wetting
Hauling (emissions from roads)	Water wetting Treatment with surface agents Soil stabilization Paving Traffic control
Crushing	Wet-dust suppression systems Capturing and venting emissions to a control device
Screening	Same as for crushing
Conveying (transfer points)	Same as for crushing
Stockpiling	Stone ladders Stacker conveyors Water sprays at conveyor discharge
Conveying	Covering Wet-dust suppression
Windblown dust from stockpiles	Water wetting Surface active agents Covering Windbreaks
Windblown dust on roads	Oiling Surface active agents Soil stabilization Paving Sweeping

Source: Reference 18

In 1987, the production of brass and bronze ingots totalled 203,934 tons (185,058 Mg).[18] Of this total, about 19 percent consisted of tin bronze, aluminum bronze, and nickel bronze, which do not contain appreciable amounts of lead. The remaining 81 percent consisted of leaded red and semi-red brass, high-leaded tin bronze, yellow brass, and manganese bronze, all of which contain significant amounts of lead. Except where otherwise indicated, this section is derived from *Control Technologies for Lead Air Emissions.*[18]

4.9.2 Process Description

Figure 4-18 illustrates the processes involved in the production of brass and bronze alloys. The principal processes include scrap metal pretreatment and smelting. Feed materials consist primarily of high-grade copper and copper alloy (brass and bronze) scrap.

Scrap pretreatment can be accomplished using several different techniques in combination or separately, depending on the type and grade of scrap to be treated. Mechanical, pyrometallurgical, and hydro-metallurgical processes may be used. Generally, the feed scrap is first concentrated by manual and mechanical means, including manual sorting, stripping, shredding, magnetic separation, and briquetting. Pyrometallurgical processes may include sweating to remove low-melting metals such as lead, solder, and babbitt; burning to remove insulation from wire or cable scrap; and drying to eliminate volatile oils and cutting fluids from machine shop scrap. Hydro-metallurgical processes include floatation and leaching.[34]

Melting, smelting, and alloying are performed in a variety of furnace types, including stationary and rotary reverberatory furnaces, electric furnaces, and crucible or pot furnaces. First, the pretreated and clean scrap, along with fluxes, are charged to the melting furnace. The charge materials are then melted by direct or indirect heat supplied by gas or oil combustion in fossil fuel-fired furnaces, and by electric arc resistance or induction in the electric furnaces. Metal oxides and other impurities in the melt react with fluxes to form a slag, which is skimmed off and generally discarded. Alloying metals are added as required to bring the mixture to the desired final composition. In addition, air and oxygen may be blown into the smelt to

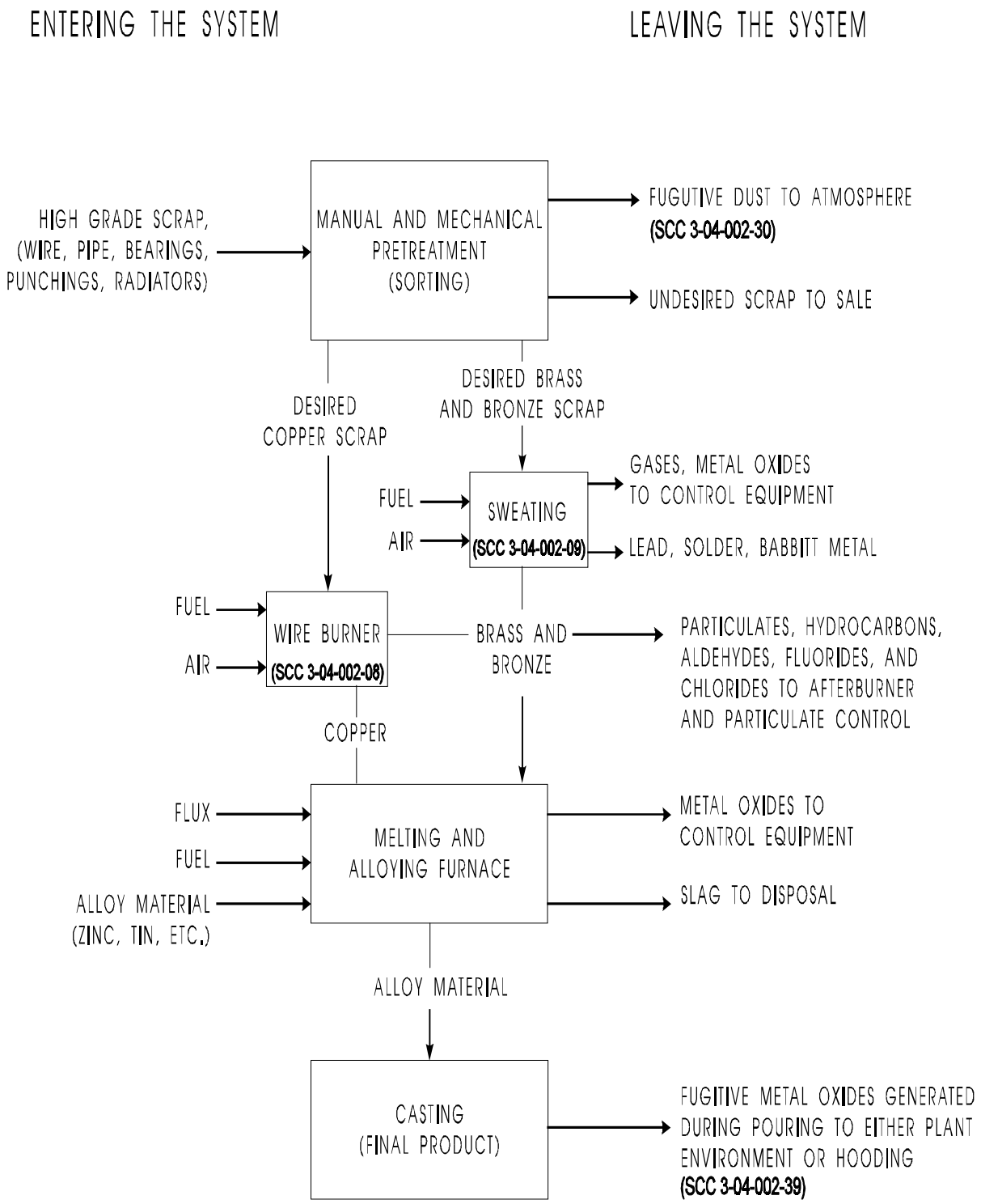

Figure 4-18. Brass and Bronze Alloys Production Processes

Source: Reference 34.

oxidize excess zinc. After the desired final composition is reached, the refined metal product is poured or tapped into ingots or other cast shapes.[34]

4.9.3 Emissions

Scrap treatment by mechanical and hydrometallurgical processes at brass and bronze manufacturing facilities produces little or no emissions. Pyrometallurgical treatment processes may generate substantial emissions, including combustion products and contaminants, but few metal oxides such as lead oxide. Wire burning generates much PM, consisting largely of unburned combustibles. Lead may be emitted as PM from wire burning depending on the lead content of the charge. Scrap drying and cutting produces large amounts of soot and hydrocarbons but little or no metal oxides such as lead oxide. Sweating operations may produce small amounts of metal oxides, which are typically controlled by baghouses.

Air pollutants emitted from brass and bronze smelting furnaces consist of products of combustion, dusts, and metallic fumes resulting from the oxidation and condensation of the more volatile metals such as lead, zinc, and others. The lead fraction of the PM generated will vary according to fuel type, alloy composition, furnace type, smelting temperature, and other operational factors. Exhaust gas parameters for an uncontrolled brass and bronze reverberatory furnace are presented in Table 4-14. Table 4-15 shows production data and emission factors.

TABLE 4-14. CHARACTERISTICS OF UNCONTROLLED EXHAUST GAS FROM A BRASS AND BRONZE REVERBERATORY FURNACE

Parameters	Standard International Units	English Units
Gas flow rate[a]	4.5 $m^3/s*Mg*h^{-1}$ product	8600 acfm/tph product
Temperature[b]	925 - 1315 C	1700 - 2400 °F
Grain loading	0.12 - 9.4 g/m^3	0.05 - 4.1 gr/scf
Particle size distribution	0.03 - 0.5 mm (majority)	
Lead content of particulate	high-leaded 58% wt yellow and red 15% wt other brass and bronze 7% wt	

Source: Reference 18

[a] Flow rates can vary according to the hooding arrangement. Volume given is at 250°F (120°C).
[b] Temperature is usually reduced to 250°F (120°C).

TABLE 4-15. BRASS AND BRONZE PRODUCTION AND LEAD EMISSIONS IN 1992

Product	Production[a] tons (Mg)	Pb Emission Factor[b] lb/ton (kg/Mg)
High-leaded alloys[c]	21,285 (19,309)	50 (25)
Red and Yellow lead alloys[d]	119,986 (108,880)	13.2 (6.6)
Other alloys[e]	21,803 (19,785)	5.0 (2.5)
Total	163,073 (147,974)	

[a] The U.S. Bureau of Mines provided total lead alloy production for 1992. The breakdown of production for each alloy type was not available. Therefore, the 1992 production estimates for each alloy type are based on the breakdown of total lead production for each alloy type in 1986. Total lead alloy production was estimated to be 163,073 tons (147,974 Mg). Source: Reference 18, 53
[b] Source: Reference 18
[c] Includes all production of high-leaded tin bronze; 90 percent of production for manganese bronze; and silicon brass and bronze.
[d] Includes all production of leaded red brass, semi-red brass, and yellow brass.
[e] Includes all production for copper-base hardness and master alloys, miscellaneous alloys, 10 percent of manganese bronze, and silicon brass and bronze.

SECTION 5.0
EMISSIONS OF LEAD AND LEAD COMPOUNDS FROM COMBUSTION SOURCES

This section contains process descriptions, available emission factor data, and source locations for source categories that emit lead and lead compounds during combustion. These source categories include fuel combustion in external and internal combustion engines; incineration of various types of waste, including municipal waste, industrial waste, sewage sludge, medical waste, hazardous waste, and scrap tires; and drum and barrel reclamation and crematories.

There are few emission controls that are dedicated solely to reducing lead emissions from combustion sources. However, the control strategies used to reduce PM emissions have been found to be effective in controlling lead emissions in particulate form. Where a specific emission control strategy has been identified to reduce lead emissions from a particular combustion source discussed in this section, that control strategy is discussed as part of the process description for that source. In many cases throughout this section, emission factor data are provided for both controlled and uncontrolled combustion units that are typically found in a particular source category.

5.1 STATIONARY EXTERNAL COMBUSTION

The combustion of solid, liquid, and gaseous fuels such as coal, wood, fuel oil, and natural gas has been shown to be a source of lead emissions. Lead emission rates depend on both fuel characteristics and combustion process characteristics. Emissions of lead originate from lead compounds contained in fuels and emitted during combustion.[51,52,53] Because metals such as lead only change forms (chemical and physical states) during combustion and are never destroyed, the

amount of lead in the original fuel or waste will be equal to the amount of lead found in the ash or emitted in the effluent gas.[54,55]

Lead concentrations in coal depend on the type of coal. Example specific lead concentrations in coal are as follows: anthracite coal contains approximately 7 ppm lead; bituminous coal contains 14 ppm lead; subbituminous coal contains 6 ppm lead; and lignite coal contains 7 ppm lead.[56] Likewise, the lead concentration in fuel oil also depends on the type of oil. Residual oil averages about 1 ppm lead by weight, while the lead content of distillate oil ranges from 0.1 to 0.5 ppm lead by weight.[57,58] Wood has been reported to have a lead content of 20 ppm.[59]

Lead and lead compound emissions may be reduced from combustion sources by using PM control devices, lower combustion and control device temperatures, and controlling feed chlorine content.[60] Each of these lead reduction techniques is discussed briefly below.

In general, use of PM control devices in combustion/air pollution control systems can be viewed as a surrogate for controlling emissions of lead (and other metals).[55] The most effective means of controlling lead emissions to the atmosphere are minimizing lead vaporization in the combustion zone and maximizing small particle collection in the Air Pollution Control Device (APCD). Lead compounds, like many heavy metal compounds, vaporize at elevated temperatures and, as temperatures drop, only a fraction of the vaporized metal condenses. The remaining vaporized metal can escape through the PM APCD.

During the combustion process, lead and other metals volatilize and then, upon cooling, condense on all available particulate surface area. The submicrometer particles with very high surface areas can carry a very high concentration of condensed lead. This phenomenon is known as "fine particle enrichment." There are three general factors favoring fine particle enrichment of lead:[55]

- High particulate surface area;
- Large number of particles; and

- Low flue gas temperatures.

There is some evidence that fine particle enrichment of lead on PM is not as prevalent at higher flue gas temperatures. It is believed that as long as the flue gas temperatures remain high, the metals tend to remain volatilized, such that they do not condense and bond with PM.[55]

Another factor that influences the extent of lead emissions is chlorine content. The chlorine content of the combusted fuel or waste increases the sensitivity of lead emissions to bed temperature. When a high chlorine content is present, lead will volatilize at lower temperatures due to the high volatility of lead chlorides ($PbCl_2$) versus oxides (PbO). Monitoring and limiting the feed chlorine content reduces the volatility of lead, allowing more lead to condense onto PM for more effective lead emissions control.

The primary stationary combustion sources emitting lead compounds are boilers, furnaces, heaters, stoves, and fireplaces used to generate heat and/or power in the residential, utility, industrial, and commercial use sectors. A description of combustion sources, typical emission control equipment, and lead emission factors for each of these major use sectors is provided in the sections that follow.

5.1.1 Source Location

Fuel economics and environmental regulations affect regional use patterns for combustion sources. Most of the utility coal-firing capability in the United States is east of the Mississippi River, with the significant remainder being in the Rocky Mountain region. Natural gas is used primarily in the South Central States and California. Oil is predominantly used in Florida and the Northeast. Information on precise utility plant locations can be obtained by contacting utility trade associations, such as the Electric Power Research Institute in Palo Alto, California (415-855-2000), the Edison Electric Institute in Washington, D.C. (202-828-7400), or the U.S. Department of Energy (DOE) in Washington, D.C. Publications by EPA and DOE on the utility industry are useful in determining specific facility locations, sizes, and fuel use.

Industrial and commercial coal combustion sources are located throughout the United States, but tend to be concentrated in areas of industry and larger population. Most of the coal-fired industrial boiler sources are located in the Midwest, Appalachian, and Southeast regions. Industrial wood-fired boilers tend to be located almost exclusively at pulp and paper, lumber products, and furniture industry facilities. These industries are concentrated in the Southeast, Gulf Coast, Appalachian, and Pacific Northwest regions. Trade associations such as the American Boiler Manufacturers Association in Arlington, Virginia and the Council of Industrial Boiler Owners in Fairfax Station, Virginia can provide information on industrial boiler locations and trends.[61,62]

Section 5.1.2 presents process descriptions and available emission factors for residential heating. Section 5.1.3 presents process descriptions for utility, industrial, and commercial fuel combustion. Section 5.1.4 presents available emission factors for utility, industrial, and commercial fuel combustion.

5.1.2 Residential Heating

The residential sector includes furnaces and boilers burning coal, oil, and natural gas, stoves and fireplaces burning wood, and kerosene heaters. All units in this sector are designed to heat individual homes. Residential combustion sources generally are not equipped with PM or gaseous pollutant control devices. With coal- and wood-fired residential sources, changes in stove design and operating practice in recent years have lowered PM, CO, and hydrocarbon emissions from these sources. Changes include modified combustion air flow control, greater thermal control and heat storage, and the use of combustion catalysts. Such changes are also expected to reduce lead emissions.[63,64]

Residential Coal Combustion

Process Description--Coal is not widely used for residential heating in the United States. Only 0.3 percent of the total coal consumption in 1990 was for residential use.[65]

Although combustion units burning coal are minor sources of lead emissions, they may be important local sources in areas where a large number of residences rely on coal for heating.

There are a wide variety of coal-burning stoves in use. These include boilers, furnaces, and stoves that are designed to burn coal, and wood-burning stoves that burn coal. These units may be either hand-fed or automatically-fed. Boilers and warm-air furnaces are usually stoker-fed and are automatically controlled by a thermostat. Stoves are less sophisticated, generally hand-fed, and less energy efficient than boilers and furnaces. Lead emissions from all of these units depend on the concentration of lead in the coal.

Emissions--A 1979 EPA study reported average lead emission factors for a residential coal-burning boiler and furnace. These emission factors, shown in Table 5-1, represent total lead particulate emissions. Although these factors are dated, they should be representative of current lead emissions from these sources for two reasons. First, these emissions depend on the concentration of lead in the coal used and, second, emission controls still remain uncommon among these sources.[66]

Residential Distillate Oil Combustion

Process Description--Distillate oil is the second most important home heating fuel behind natural gas. (Residual oil is seldom used in the residential sector.)[67] The use of distillate oil-fired heating units is concentrated in the Northeast. In 1991, Connecticut, Maine, Massachusetts, New Hampshire, Rhode Island, Vermont, Delaware, District of Columbia, Maryland, New Jersey, New York, and Pennsylvania accounted for approximately 72 percent of residential distillate oil sales.[68]

Residential oil-fired heating units are available in a number of design and operating variations. These variations include burner and combustion chamber design, excess air, and heating medium. Residential systems typically operate only in an “on” or “off” mode and at a constant fuel-firing rate, unlike commercial and industrial applications, where load modulation is the general practice.[70] In distillate oil-fired heating units, fuel oil is atomized into

TABLE 5-1. LEAD EMISSION FACTORS FOR RESIDENTIAL COAL COMBUSTION

SCC Number	Emission Source	Control Device	Average Emission Factor in lb/ton (kg/Mg)[a]	Emission Factor Range in lb/ton (kg/Mg)[a]	Emission Factor Rating
A21-04-002-000	Bituminous/ Subbituminous Coal - All Combustor Types	None	2.00×10^{-2} (1.00×10^{-2})	---	U
A21-04-001-000	Anthracite Coal - All Combustor Types	None	1.60×10^{-2} (8.00×10^{-3})	---	U

Source: Reference 69

[a] Emission factors are expressed in lb (kg) of pollutant emitted per ton (Mg) of coal combusted.

"---" means data are not available.

finer droplets for combustion. Finer droplets generally result in more complete combustion and less PM formation.

Emissions--Lead emissions from oil combustion depend primarily on the grade, composition of the fuel, and the level of equipment maintenance. Secondary contributions would be the type and size of the combustion equipment and the firing and loading practices used. The extent of particulate and lead emissions depends directly on the grade of oil fired. The lighter distillate oils result in significantly lower particulate formation than do the heavier and dirtier residual oils. In addition, residual oils typically contain substantially higher lead levels than do distillate oils.

Residential combustion units are less sophisticated than utility and industrial combustion units. For this reason, they normally burn distillate oil to keep emissions to a minimum.[57,58] Average emission factors for residential distillate oil-fired furnaces are presented in Table 5-2.

Residential Natural Gas Combustion

Process Description--Natural gas is the most widely used fuel for home heating purposes. More than half of all homes in the United States are heated by natural gas combustion.[71] Gas-fired residential heating systems are generally less complex and easier to maintain than oil-burning units because the fuel burns cleaner and no atomization is required. Residential gas burners typically are built of the same basic design. Natural aspiration is used where the primary air mixes with the gas as it passes through the distribution pipes. Secondary air enters the furnace around the burners. Flue gases then pass through a heat exchanger and a stack. As with oil-fired systems, there is usually no APCD installed on gas systems. Excess air, residence time, flame retention devices, and maintenance are the key factors in controlling PM (including lead) emissions from these units.

Emissions--Emissions testing data for lead from gas-fired residential units have been extremely scarce, probably because the expected emissions are low and this source has not

TABLE 5-2. EMISSION FACTORS FOR RESIDENTIAL DISTILLATE OIL-FIRED FURNACES

SCC Number	Emission Source	Control Device	Average Emission Factor in lb/MMBtu (kg/Joule)[a]	Emission Factor Range in lb/MMBtu (kg/Joule)[a]	Emission Factor Rating
A21-04-004-000	Distillate (No. 2 oil) Oil-fired Furnaces	None	2.2×10^{-4} (9.5×10^{-14})	2.44×10^{-2} - 3.08×10^{-2} (2.92×10^{-6} - 3.96×10^{-6})	U

Source: Reference 72

[a] Emission factors are expressed in lb (kg) of pollutant emitted per MMBtu (Joule) of heat input.

been identified as a priority for testing. As a result, there are no available emission factors for this source.

5.1.3 Process Descriptions for Utility, Industrial, and Commercial Fuel Combustion

Utility Sector

Utility boilers burn coal, oil, natural gas, and wood to generate steam for electricity generation. Fossil fuel-fired utility boilers comprise about 72 percent [or 497,000 megawatts (MW)] of the generating capacity of U.S. electric power plants. Of these fuels, coal is the most widely used, accounting for approximately 60 percent of the U.S. fossil fuel-powered electricity generating capacity. Natural gas represents about 25 percent and oil represents the remaining 15 percent.[73]

A utility boiler consists of several major subassemblies, as shown in Figure 5-1. These subassemblies include the fuel preparation system, air supply system, burners, the furnace, and the convective heat transfer system. The fuel preparation system, air supply, and burners are primarily involved in converting fuel into thermal energy in the form of hot combustion gases. The last two subassemblies transfer the thermal energy in the combustion gases to the superheated steam that operates the steam turbine and produces electricity.[73]

Utility boilers are generally identified by their furnace configuration. Different furnace configurations used in utility boilers include tangentially-fired, wall-fired, cyclone-fired, stoker-fired, and fluidized bed combustion (FBC) boilers. Some of these furnace configurations are designed primarily for coal combustion, while others are also used for oil or natural gas combustion. The furnaces types most commonly used for firing oil and natural gas are the tangentially-fired and wall-fired boiler designs.[74] Each of these furnace types is described below.

Tangentially-fired Boiler--The tangentially-fired boiler is based on the concept of a single flame zone within the furnace. The fuel-air mixture in a tangentially-fired boiler projects from the four corners of the furnace along a line tangential to an imaginary cylinder located

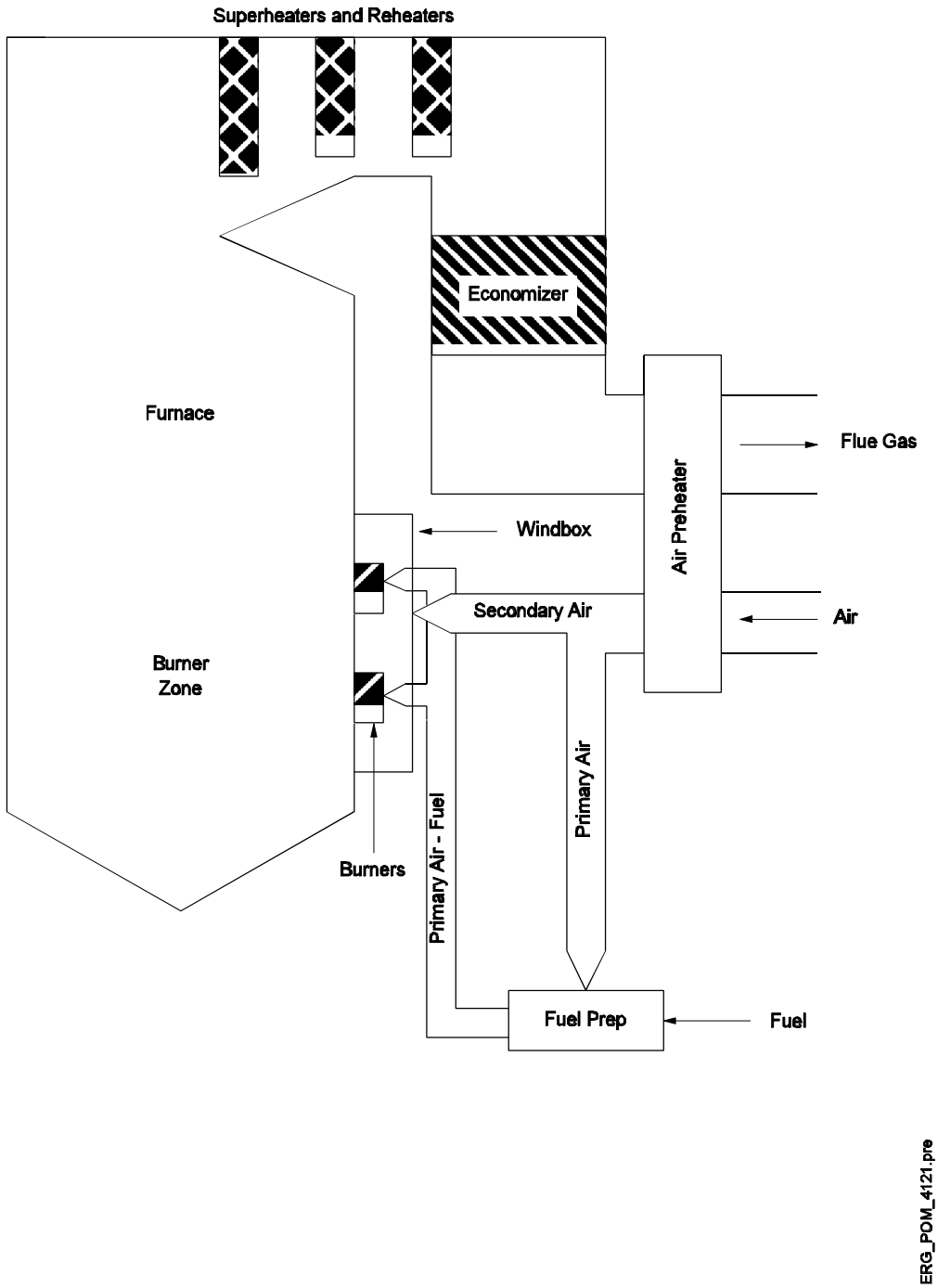

Figure 5-1. Simplified Boiler Schematic

Source: Reference 73.

along the furnace centerline. When coal is used as the fuel, the coal is pulverized in a mill to the consistency of talcum powder (i.e., so that at least 70 percent of the particles will pass through a 200 mesh sieve), entrained in primary air, and fired in suspension.[75] As fuel and air are fed to the burners, a rotating "fireball" is formed. By tilting the fuel-air nozzle assembly, this "fireball" can be moved up and down to control the furnace exit gas temperature and to provide steam temperature control during variations in load. Tangentially-fired boilers commonly burn (pulverized) coal. However, oil or gas may also be burned.[73]

Wall-fired Boiler--The wall-fired boiler, or normal-fired boiler, is characterized by multiple, individual burners located on a single wall or on opposing walls of the furnace (Figure 5-2). As with tangentially-fired boilers, when coal is used as the fuel it is pulverized, entrained in primary air, and fired in suspension. In contrast to tangentially-fired boilers that produce a single flame zone, each of the burners in a wall-fired boiler has a relatively distinct flame zone. Various wall-fired boiler types exist, including single-wall, opposed-wall, cell, vertical, arch, and turbo. Wall-fired boilers may burn (pulverized) coal, oil, or natural gas.[73]

Cyclone-fired Boiler--In the cyclone-fired boiler, fuel and air are burned in horizontal, cylindrical chambers, producing a spinning, high-temperature flame. Cyclone-fired boilers are almost exclusively (crushed) coal-fired. The coal is crushed to a 4-mesh size and admitted with the primary air in a tangential fashion. The finer coal particles are burned in suspension, while the coarser particles are thrown to the walls by centrifugal force.[74] Some units are also able to fire oil and natural gas.[73]

Fluidized Bed Combustion Boiler--Fluidized bed combustion is a newer boiler technology that is not as widely used as the other, more conventional boiler types. In a typical FBC, crushed coal in combination with inert material (sand, silica, alumina, or ash) and/or sorbent (limestone) are maintained in a highly turbulent suspended state by the upward flow of primary air (Figure 5-3). This fluidized state promotes uniform and efficient combustion at lower furnace temperatures, between 1,575 and 1,650°F (860 and 900°C), compared to 2,500 and 2,800°F (1,370 and 1,540°C) for conventional coal-fired boilers. Fluidized bed combustors have been developed to operate at both atmospheric and pressurized conditions.[73]

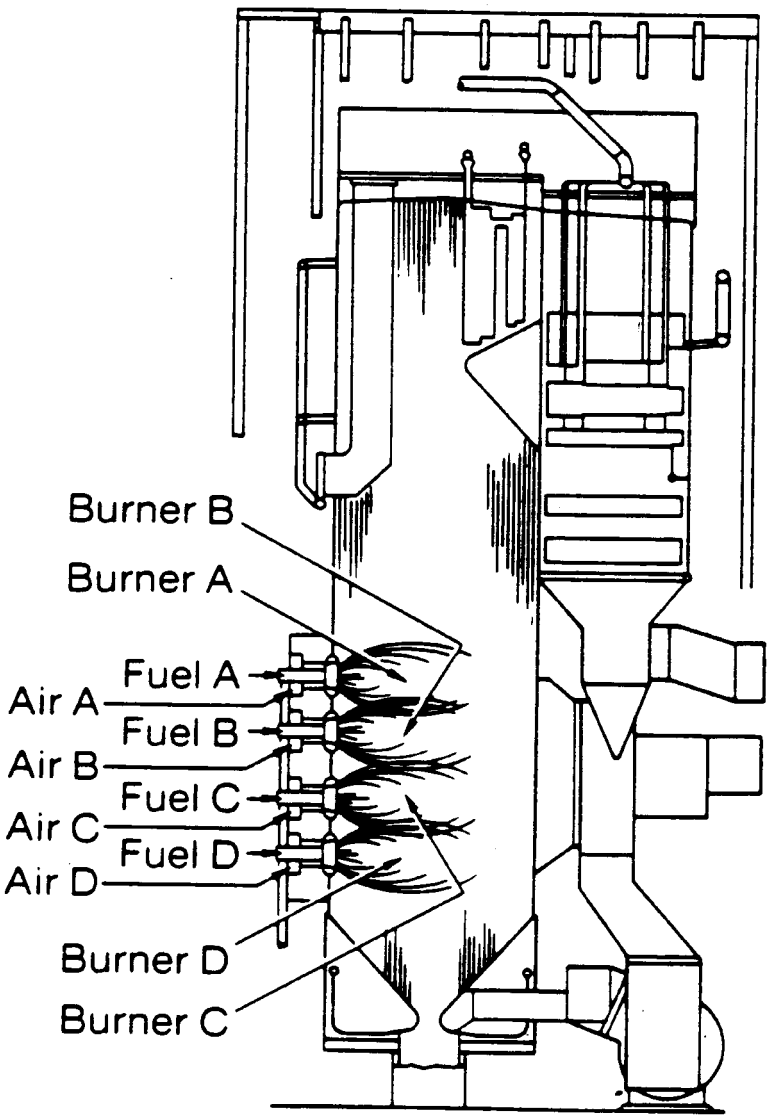

ERG_POM_412c.pre

Figure 5-2. Single Wall-fired Boiler

Source: Reference 73.

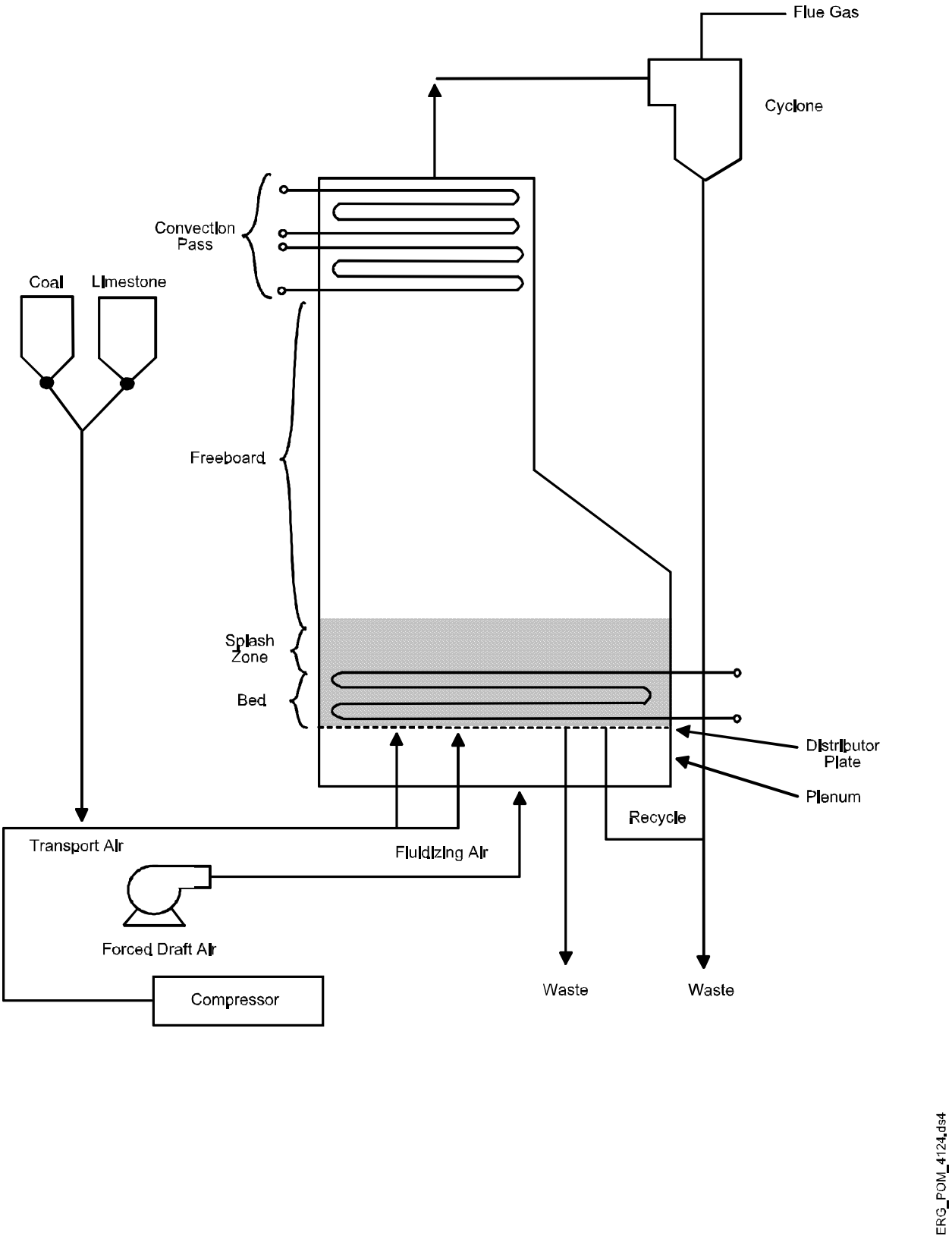

Figure 5-3. Simplified Atmospheric Fluidized Bed Combustor Process Flow Diagram

Source: Reference 73.

Stoker-fired Boiler--Instead of firing coal in suspension as in the boilers described above, the mechanical stoker can be used to burn coal in fuel beds. Mechanical stokers are designed to feed coal onto a grate within the furnace. The most common stoker type used in the utility industry is the spreader stoker (Figure 5-4). In the spreader stoker, a flipping mechanism throws crushed coal into the furnace and onto a moving fuel bed (grate). Combustion occurs partly in suspension and partly on the grate.[75]

Emission Control Techniques--Utility boilers are highly efficient and are among the best controlled of all combustion sources. Existing emission regulations for total PM have necessitated controls on coal- and oil-fired utility sources. Emission controls are not required on natural gas boilers because, relative to coal and oil units, uncontrolled emissions are inherently low.[64] Baghouses, ESPs, wet scrubbers, and multicyclones have been used to control PM in the utility sector. As described in other source category sections, lead condenses on PM, which is easily controlled by PM control technologies. Particulate lead, specifically fine particulate, is controlled most effectively by baghouses or ESPs. Depending on their design, wet scrubbers are potentially effective in controlling particulate lead. Multicyclones are ineffective at capturing fine particles of lead and, therefore, are a poor control system for lead emissions.[63,64]

Lead emissions from utility boilers are commonly controlled using an SO_2 control technology known as lime/limestone flue gas desulfurization (FGD). This technology employs a wet scrubber for SO_2 removal and is often preceded by an ESP, which accomplishes the bulk of PM control. Wet FGD/ESP systems, while controlling lead condensed on PM at the entrance to the ESP, are relatively inefficient for control of vapor-phase lead. However, most lead emissions are condensed on PM and are not emitted in the vapor phase.[63,64]

A more recently applied SO_2 control technique for utility boilers is spray drying. In this process, the gas stream is cooled in the spray dryer, but it remains above the saturation temperature. A fabric filter or an ESP is located downstream of the spray dryer, thus controlling both particulate-phase lead emissions and vapor-phase lead emissions that condense before they reach the baghouse or ESP.[63,64]

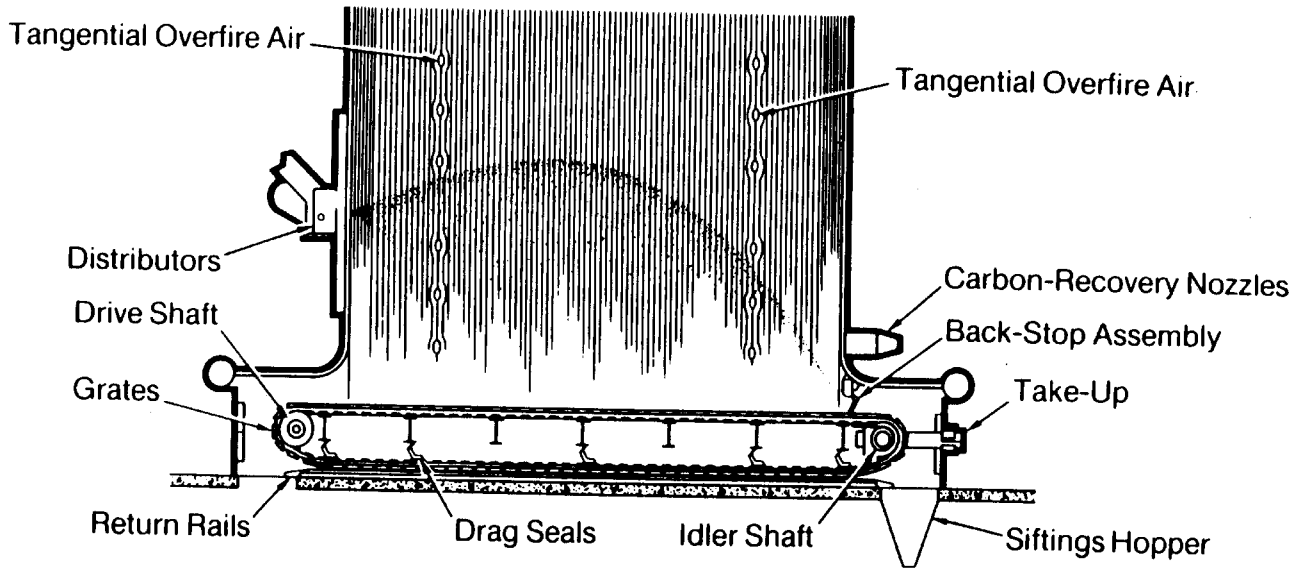

Figure 5-4. Spreader Type Stoker-fired Boiler

Source: Reference 73.

Industrial/Commercial Sector

Industrial boilers are widely used in manufacturing, processing, mining, and refining, primarily to generate process steam, electricity, or space heat at the facility. Only a limited amount of electricity is generated by the industrial sector; only 10 to 15 percent of industrial boiler coal consumption and 5 to 10 percent of industrial boiler natural gas and oil consumption are used for electricity generation.[76] Commercial boilers are used to provide space heating for commercial establishments, medical institutions, and educational institutions.

In collecting survey data to support its Industrial Combustion Coordinated Rulemaking (ICCR), the EPA compiled information on a total of 69,494 combustion boiler units in the industrial and commercial sectors.[259] While this number likely underestimates the total population of boilers in the industrial and commercial sectors (due to unreceived survey responses and lack of information on very small units) it provides an indication of the large number of sources included in this category.

Of the units included in the ICCR survey database, approximately 70% were classified in the natural gas fuel subcategory, 23% in the oil (distillate and residual) subcategory, and 6% in the coal burning subcategory. These fuel subcategory assignments are based on the units burning only greater than 90% of the specified fuel for that subcategory. All other units (accounting for the other 1% of assignments) are assigned to a subcategory of "other fossil fuel."[259]

Other fuels burned in industrial boilers are wood wastes, liquified petroleum gas, and kerosene. Wood waste is the only non-fossil fuel discussed here since most lead emissions are attributed to the combustion of wood fuel. The burning of wood waste in boilers is confined to those industries where it is available as a by-product. It is burned both to obtain heat energy and to alleviate possible solid waste disposal problems. Generally, bark is the major type of wood waste burned in pulp mills. In the lumber, furniture, and plywood industries, either a mixture of wood and bark, or wood alone, is frequently burned. As of 1980, the most recent data identified,

there were approximately 1,600 wood-fired boilers operating in the United States with a total capacity of over 100,000 MMBtu/hr (30,000 MW thermal).[78]

Many of the same boiler types used in the utility sector are also used in the industrial/commercial sector; however, the average size boiler used in the industrial/ commercial sector is substantially smaller than the average size boiler used in the utility sector. In addition, a few boiler designs are used only by the industrial/commercial sector. For a general description of the major subassemblies and key thermal processes that occur in boilers, refer to Figures 5-1 to 5-4 in the section on Utility Sector Process Description and the accompanying discussion.

Stoker-fired Boiler--Instead of firing coal in suspension (like the boilers described in the Utility Sector Process Description section), mechanical stokers can be used to burn coal in fuel beds. All mechanical stokers are designed to feed coal onto a grate within the furnace. The most common stoker types in the industrial/commercial sector are overfeed and underfeed stokers. In overfeed stokers, crushed coal is fed from an adjustable gate above onto a traveling or vibrating grate below. The crushed coal burns on the fuel bed as it progresses through the furnace. Conversely, in underfeed stokers, crushed coal is forced upward onto the fuel bed from below by mechanical rams or screw conveyors.[73,75]

Water-tube Boilers--In water-tube boilers, water is heated as it flows through tubes surrounded by circulating hot gases. These boilers represent the majority (i.e., 57 percent) of industrial and commercial boiler capacity (70 percent of industrial boiler capacity).[76] Water-tube boilers are used in a variety of applications, from supplying large amounts of process steam to providing space heat for industrial and commercial facilities. These boilers have capacities ranging from 9.9 to 1,494 MMBtu/hr (2.9 to 439.5 MW thermal), averaging about 408 MMBtu/hr (120 MW thermal). The most common types of water-tube boilers used in the industrial/commercial sector are wall-fired and stoker-fired boilers. Tangentially-fired boilers and FBC boilers are less commonly used.[77] Refer to Figures 5-1 to 5-4 and the accompanying discussion in the section on Utility Sector Process Description for more detail on these boiler designs.

Fire-tube and Cast Iron Boilers--Two other heat transfer methods used in the industrial/commercial sector are fire-tube and cast iron boilers. In fire-tube boilers, hot gas flows through tubes that are surrounded by circulating water. Fire-tube boilers are not available with capacities as large as water-tube boilers, but they are also used to produce process steam and space heat. Most fire-tube boilers have a capacity between 1.4 and 25 MMBtu/hr (0.4 to 7.3 MW thermal). Most installed fire-tube boilers burn oil or gas and are used primarily in commercial/institutional applications.[77]

In cast iron boilers, the hot gas is also contained inside the tubes that are surrounded by the water being heated, but the units are constructed of cast iron instead of steel. Cast iron boilers are limited in size and are used only to supply space heat. Cast iron boilers range in size from less than 0.34 to 9.9 MMBtu/hr (0.1 to 2.9 MW thermal).[77]

Wood Waste Boilers--The burning of wood waste in boilers is primarily confined to those industries where wood is available as a by-product. Wood is burned both to obtain heat energy and to alleviate solid waste disposal problems. Wood waste may include large pieces such as slabs, logs, and bark strips as well as cuttings, shavings, pellets, and sawdust.[78]

Various boiler firing configurations are used to burn wood waste. One configuration that is common in smaller operations is the dutch oven or extension type of furnace with a flat grate. This unit is used widely because it can burn very high-moisture fuels. Fuel is fed into the oven through apertures in a firebox and is fired in a cone-shaped pile on a flat grate. The burning is accomplished in two stages: (1) drying and gasification, and (2) combustion of gaseous products. The first stage takes place in a cell separated from the boiler section by a bridge wall. The combustion stage takes place in the main boiler section.[78]

In another type of boiler, the fuel-cell oven, fuel is dropped onto suspended fixed grates and is fired in a pile. The fuel cell uses combustion air preheating and positioning of secondary and tertiary air injection ports to improve boiler efficiency.[78]

In many large operations, more conventional boilers have been modified to burn wood waste. These modified units may include spreader stokers with traveling grates or vibrating grate stokers, as well as tangentially-fired or cyclone-fired boilers. Refer to Figures 5-1 to 5-4 and the accompanying discussion in the section on Utility Sector Process Description for more detail on these types of boilers. The spreader stoker, which can burn dry or wet wood, is the most widely used of these configurations. Fuel is dropped in front of an air jet that casts the fuel out over a moving grate. The burning is carried out in three stages: (1) drying, (2) distillation and burning of volatile matter, and (3) burning of fixed carbon. These operations often fire natural gas or oil as auxiliary fuel. Firing an auxiliary fuel helps to maintain constant steam when the wood supply fluctuates or to provide more steam than can be generated from the wood supply alone.[78]

Sander dust is often burned in various boiler types at plywood, particle board, and furniture plants. Sander dust contains fine wood particles with a moisture content of less than 20 percent by weight. The dust is fired in a flaming horizontal torch, usually with natural gas as an ignition aid or as a supplementary fuel.[78]

A recent development in wood-firing is the FBC (refer to Figures 5-1 to 5-4 and the accompanying discussion in Utility Sector Process Description for more detail on this boiler type). Because of the large thermal mass represented by the hot inert bed particles, FBCs can handle fuels with high moisture content (up to 70 percent, total basis). Fluidized bed combustors can also handle dirty fuels (up to 30 percent inert material). Wood material is pyrolyzed faster in a fluidized bed than on a grate due to its immediate contact with hot bed material.[78]

The composition of wood waste is expected to have an impact on lead emissions. The composition of wood waste depends largely on the industry from which it originates. Wood waste fuel can contain demolition debris like plastics, paint, creosote-treated wood, glues, synthetics, wire, cable, insulation, etc., which are potential sources of lead emissions. Pulping operations, for example, produce great quantities of bark along with sand and other noncombustibles. In addition, when fossil fuels are co-fired with wood waste, there is potential for additional lead emissions from the lead content of the fossil fuel.[79]

Waste Oil Combustion--Waste oil is another type of fuel that is burned primarily in small industrial/commercial boilers and space heaters. Space heaters (small combustion units generally less than 250,000 Btu/hr [0.1 MW] heat input) are common in automobile service stations and automotive repair shops where supplies of waste crankcase oil are available.[80] Waste oil includes used crankcase oils from automobiles and trucks, used industrial lubricating oils (such as metal working oils), and other used industrial oils (such as heat transfer fluids). Due to a breakdown of the physical properties of these oils and contamination by other materials, these oils are considered waste oils when they are discarded.[81]

The federal government has developed regulations for waste oil fuel under the Resource Conservation and Recovery Act (RCRA). The EPA has determined that as long as used oil is recycled (which includes burning it for energy recovery as well as re-refining it or other processes), it is not considered a hazardous waste under RCRA 40 CFR 261.1.[82] However, if a facility does burn used oil, that facility is subject to certain requirements under RCRA.

EPA has established two categories of waste fuel: "on-specification" and "off-specification." If the lead levels of the waste oil are 100 ppm or less, the waste oil is classified as "on-specification;" if the lead levels are greater than 100 ppm, the waste oil is classified as "off-specification" (40 CFR 279.11).[83]

If a facility is burning "on-specification" waste oil for energy recovery, that facility is only subject to certain reporting and recordkeeping requirements (40 CFR 279.11).[86] If a facility burns the waste oil in a space heater with heat input capacity less than 0.5 million Btu/hr (0.15 Mg) and vents the exhaust to the ambient air, that facility is not subject to any requirements (40 CFR 279.23).[84]

A facility burning "off-specification" waste oil for energy recovery must comply with additional requirements, including verification to EPA that the combusted oil was not mixed with other hazardous wastes (40 CFR Subpart G).[88]

Boilers designed to burn No. 6 (residual) fuel oils or one of the distillate fuel oils can be used to burn waste oil, with or without modifications for optimizing combustion. As an alternative to boiler modification, the properties of waste oil can be modified by blending it with fuel oil to the extent required to achieve a clean-burning fuel mixture.

Coal Combustion--A very small amount of coal is used in the industrial/ commercial sector. Coal accounts for only 18 percent of the total firing capacity of fossil fuel used. The majority of coal combustion occurs in the utility sector. Refer to Figures 5-1 to 5-4 and the accompanying discussion in Utility Sector Process Description for more detail about these boiler types.

Emission Control Techniques--The amount of lead emissions from industrial/commercial boilers depends primarily on two factors: (1) the type of fuel burned, and (2) the type of boiler used. The secondary influences on lead emissions are the operating conditions of the boiler and the APCD used.

Fly ash injection, one type of control commonly used in large wood-fired boilers to improve fuel efficiency, may increase particulate lead emissions. With fly ash injection, a greater amount of carbon is introduced into the boiler which, in turn, increases the amount of fine PM. Fine PM is more difficult to collect with the APCD; the fine PM escapes through the APCD uncontrolled, thereby increasing lead emissions.[75]

Emission controls for industrial boilers and their effectiveness in reducing lead emissions are very similar to those previously described for utility boilers. PM control in the industrial sector is achieved with baghouses, ESPs, wet scrubbers, and multicyclones. FGD systems for SO_2 control are used less frequently in the industrial sector than in the utility sector. Generally, in the industrial sector, SO_2 regulations are met by burning lower-sulfur-content fuels.[63,64]

PM emissions from oil-fired industrial boilers generally are not controlled under existing regulations because emission rates are low. Some areas may limit SO_2 emissions from

oil-firing by specifying the use of lower-sulfur-content oils. Natural gas-fired industrial boilers are also generally uncontrolled because of very low emissions.[63,64]

Wood-fired industrial boilers are typically controlled by multicyclones followed by venturi or impingement-type wet scrubbers for PM control. Some wood-fired boilers use ESPs for PM control. The effect of both control systems on lead emissions reduction is estimated to be similar to that obtained at coal-fired units using the same technology (i.e., potentially effective PM and vaporous lead control with scrubbers, and effective PM lead control but no vaporous lead control with ESPs).[63,64]

5.1.4 Emission Factors for Utility, Industrial, and Commercial Fuel Combustion

Extensive lead emissions data for utility, industrial, and commercial stationary external combustion sources are available in the literature. Because state and federal air pollution regulations often require emissions testing for toxic air pollutants, a current database of lead emissions from these fuel combustion sources exists.

Emission factors for utility, industrial, and commercial stationary external combustion source categories, grouped according to the type of fuel burned, are presented in Tables 5-3 to 5-19 and discussed under the following sub-headings:

- Wood waste combustion:
  - -- Utility boilers (Table 5-3),
  - -- Industrial boilers (Table 5-4),
  - -- Commercial/institutional boilers (Table 5-5);
- Natural gas combustion:
  - -- Utility boilers (Tables 5-6 and 5-7);

- Coal combustion:
  - -- Utility boilers (Tables 5-8 and 5-9),
  - -- Industrial boilers (Table 5-10),
  - -- Commercial/institutional boilers (Table 5-11);
- Oil combustion:
  - -- Utility boilers (Table 5-12 and 5-13),
  - -- Industrial boilers (Table 5-14),
  - -- Commercial/institutional boilers (Table 5-15);
- Waste oil combustion:
  - -- Industrial boilers (Table 5-16),
  - -- Commercial/institutional boilers (Table 5-17);
- Solid waste combustion:
  - -- Utility boilers (Table 5-18);
- Miscellaneous combustion:
  - -- Industrial boilers (Table 5-19).

Wood Waste Combustion

Lead emission factors for wood waste combustion in utility, industrial, and commercial boilers are presented in Tables 5-3, 5-4, and 5-5, respectively. These emission factors are widely applicable to all utility, industrial, and commercial wood waste combustion SCC categories.[73] However, a wide range of boiler sizes, boiler and control device configurations, and fuel characteristics is reflected by these composite emission factors. For this reason, if site-specific information is available to characterize an individual combustion source more accurately, it is recommended that the reader locate the appropriate process-specific emission factor presented in the applicable table.

TABLE 5-3. LEAD EMISSION FACTORS FOR WOOD WASTE-FIRED UTILITY BOILERS

SCC Number	Emission Source	Control Device	Average Emission Factor in lb/ton (kg/Mg)[a]	Emission Factor Range in lb/ton (kg/Mg)[a]	Emission Factor Rating	Reference
1-01-009-01	Wood Waste-fired Boiler (Bark-fired)	None	2.90×10^{-3} (1.45×10^{-3})	---	D	86
1-01-009-02	Wood Waste-fired Boiler (Wood/Bark-fired)	ESP	1.60×10^{-5} (8.00×10^{-6})	---	D	86
		Scrubber	3.50×10^{-4} (1.75×10^{-4})	---	D	86
		Multiple Cyclone with Flyash Reinjection	3.20×10^{-4} (1.60×10^{-4})	---	D	86
		Multiple Cyclone without Flyash Reinjection	3.20×10^{-4} (1.60×10^{-4})	---	D	86
1-01-009-03	Wood Waste-fired Boiler (Wood-fired)	ESP	1.10×10^{-3} (5.50×10^{-4})	---	D	86
		Multiple Cyclone without Flyash Reinjection	3.10×10^{-4} (1.55×10^{-4})	---	D	86
		None	2.9×10^{-3} (1.45×10^{-3})	---	U	87
		Limestone Injection, Thermal de- NO_x with Ammonia Injection, Water Treatment, Multi-Cyclone, Fabric Collector	4.49×10^{-6} lb/MMBtu[b] (1.93×10^{-15} kg/Joule)	1.4×10^{-7} - 9.41×10^{-6} lb/MMBtu[b] (6.00×10^{-17} - 4.10×10^{-15} kg/Joule)	U	88

[a] Emission factors are expressed in lb (kg) of pollutant emitted per ton (Mg) of wood waste combusted, except as noted. Emission factors are based on wet, as-fired wood waste with 50 percent moisture and a higher heating volume of 4,500 Btu/lb.
[b] Emission factors are expressed in lb (kg) of pollutant emitted per MMBtu (Joule) of heat input.

"---" means data are not available.
ESP = Electrostatic Precipitator.

TABLE 5-4. LEAD EMISSION FACTORS FOR WOOD WASTE-FIRED INDUSTRIAL BOILERS

SCC Number	Emission Source	Control Device	Average Emission Factor in lb/ton (kg/Mg)[a]	Emission Factor Range in lb/ton (kg/Mg)	Emission Factor Rating	Reference
1-02-009-01	Wood Waste-fired Boiler (Bark-fired, >50,000 lb steam)	ESP - Medium Efficiency	1.50×10^{-6} lb/MMBtu[b] (6.46×10^{-16} kg/Joule)	1.30×10^{-6} - 1.70×10^{-6} lb/MMBtu[b] (5.60×10^{-16} - 7.33×10^{-16} kg/Joule)	U	89
		None	2.90×10^{-3} (1.45×10^{-3})	---	D	86
1-02-009-02	Wood Waste-fired Boiler (Wood/Bark-fired, >50,000 lb steam)	Multiple Cyclone with Flyash Reinjection	3.20×10^{-4} (1.60×10^{-4})	---	D	86
		ESP	1.60×10^{-5} (8.00×10^{-6})	---	D	86
		Scrubber	3.50×10^{-4} (1.75×10^{-4})	---	D	86
		Multiple Cyclone without Flyash Reinjection	3.20×10^{-4} (1.60×10^{-4})	---	D	86
1-02-009-03	Wood Waste-fired Boiler (Wood-fired, >50,000 lb steam)	Wet Scrubber - Medium Efficiency	1.60×10^{-5} lb/MMBtu[b] (6.89×10^{-15} kg/Joule)	1.10×10^{-5} - 2.50×10^{-5} lb/MMBtu[b] (4.74×10^{-15} - 1.08×10^{-14} kg/Joule)	U	90
		Multiple Cyclone without Flyash Reinjection/Wet Scrubber - Medium Efficiency	4.00×10^{-5} lb/MMBtu[b] (1.72×10^{-14} kg/Joule)	3.20×10^{-4} - 5.00×10^{-4} lb/MMBtu[b] (1.38×10^{-13} - 2.15×10^{-13} kg/Joule)	U	91
		Multiple Cyclone without Flyash Reinjection	3.10×10^{-4} (1.55×10^{-4})	---	D	86
		ESP	1.10×10^{-3} (5.50×10^{-4})	---	D	86

TABLE 5-4. LEAD EMISSION FACTORS FOR WOOD WASTE-FIRED INDUSTRIAL BOILERS (CONTINUED)

SCC Number	Emission Source	Control Device	Average Emission Factor in lb/ton (kg/Mg)[a]	Emission Factor Range in lb/ton (kg/Mg)	Emission Factor Rating	Reference
1-02-009-03 (continued)	Wood Waste-fired Boiler (Wood-fired, >50,000 lb steam)	Multiple Cyclone without Flyash Reinjection/ESP - Medium Efficiency	2.25×10^{-6} lb/MMBtu[b] (9.70×10^{-16} kg/Joule)	2.10×10^{-6} - 2.40×10^{-6} lb/MMBtu[b] (9.05×10^{-16} - 1.03×10^{-15} kg/Joule)	U	92
1-02-009-04	Wood Waste-fired Boiler (Bark-fired, <50,000 lb steam)	None	2.90×10^{-3} (1.45×10^{-3})	---	D	86
1-02-009-05	Wood Waste-fired Boiler (Wood/Bark-fired, <50,000 lb steam)	Multiple Cyclone with Flyash Reinjection	3.20×10^{-4} (1.60×10^{-4})	---	D	86
		ESP	1.60×10^{-5} (8.00×10^{-6})	---	D	86
		Scrubber	3.50×10^{-4} (1.75×10^{-4})	---	D	86
		Multiple Cyclone without Flyash Reinjection	3.20×10^{-4} (1.60×10^{-4})	---	D	86
1-02-009-06	Wood Waste-fired Boiler (Wood-fired, <50,000 lb steam)	Multiple Cyclone without Flyash Reinjection	3.10×10^{-4} (1.55×10^{-4})	---	D	86
		ESP	1.10×10^{-3} (5.50×10^{-4})	---	D	86
		Scrubber	1.14×10^{-5} lb/MMBtu[b] (4.91×10^{-15} kg/Joule)	---	U	93

[a] Emission factors are expressed in lb (kg) of pollutant emitted per ton (Mg) of wood waste combusted, except as noted. Emission factors are based on wet, as-fired wood waste with average properties of 50 percent moisture and 4,500 Btu/lb higher heating value.
[b] Emission factors are expressed in lb (kg) of pollutant emitted per MMBtu (Joule) of heat input.

"---" means data are not available.
ESP = Electrostatic Precipitator.

TABLE 5-5. LEAD EMISSION FACTORS FOR WOOD WASTE-FIRED COMMERCIAL/INSTITUTIONAL BOILERS

SCC Number	Emission Source	Control Device	Average Emission Factor in lb/ton (kg/Mg)[a]	Emission Factor Range in lb/ton (kg/Mg)[a]	Emission Factor Rating
1-03-009-01	Wood/Bark-fired Boiler (Bark-fired)	None	2.90×10^{-3} (1.45×10^{-3})	---	D
1-03-009-02	Wood/Bark-fired Boiler (Wood/Bark-fired)	Multiple Cyclone with Flyash Reinjection	3.20×10^{-4} (1.60×10^{-4})	---	D
		Scrubber	3.50×10^{-4} (1.75×10^{-4})	---	D
		ESP	1.60×10^{-5} (8.00×10^{-6})	---	D
		Multiple Cyclone without Flyash Reinjection	3.20×10^{-4} (1.60×10^{-4})	---	D
1-03-009-03	Wood/Bark-fired Boiler (Wood-fired)	Multiple Cyclone without Flyash Reinjection	3.10×10^{-4} (1.55×10^{-4})	---	D
		ESP	1.10×10^{-3} (5.50×10^{-4})	---	D

Source: Reference 86

[a] Emission factors are expressed in lb (kg) of pollutant emitted per ton (Mg) of wood waste combusted. Emission factors are based on wet, as-fired wood waste with 50 percent moisture and a higher heating value of 4,500 Btu/lb.

"---" means data are not available.

ESP = Electrostatic Precipitator.

The average emission factors for utility wood waste-fired boilers are presented in Table 5-3. The emission factors represent a range of control configurations and wood waste compositions.[86]

Average emission factors for industrial wood waste-fired boilers are presented in Table 5-4. Several of the emission factors are based on a comprehensive toxic air emission testing program in California. The study, conducted by the Timber Association of California (TAC), tested boiler types with capacities greater than 50,000 lb (22,680 kg) of steam per hour, including fuel cell, dutch oven, stoker, air injection, and fluidized bed combustors. The summarized results of the study were used to obtain the average lead emission factors. The emission factors represent a range of boiler designs and capacities, control configurations, and wood waste compositions. The range of control devices represented in the sample set included multiple cyclones, ESPs, and wet scrubbers. Sampling was conducted using CARB Method 431, which captures particulate lead.[89,90,91]

Wood waste-fired commercial/institutional boilers average emission factors are presented in Table 5-5. These emission factors represent a range of control configurations and wood waste compositions.[86] Many of these same emission factors can be found in the utility, commercial/institutional, and industrial wood waste-fired tables. This duplication is expected because the same types of boilers and waste composition are found in all three industry categories.

Natural Gas Combustion

There were few data available for deriving lead emission factors for natural gas-fired utility boilers. Based on the limited data available, it is unclear whether there are significant lead emissions from these boilers. Tables 5-6 and 5-7 present lead emission factors for natural gas fired boilers.

TABLE 5-6. LEAD EMISSION FACTORS FOR NATURAL GAS - FIRED UTILITY BOILERS FROM AP-42

SCC Number	Emission Source	Control Device	Average Emission Factor in lb/ton (kg/Mg)[a]	Emission Factor Range in lb/ton (kg/Mg)[a]	Emission Factor Rating	Reference
1-01-006-04	Natural Gas Boiler	[b]	2.71×10^{-4}	---	E	94

[a] To convert from lb/million ft^3 to Kg/million m^3 multiply by 16.0.
[b] Data for boilers controlled with overfire air and flue gas recirculation.

TABLE 5-7. LEAD EMISSION FACTORS FOR NATURAL GAS - FIRED BOILERS FROM UTILITY STUDY

Emission Source	Control Device	Median Factor (lb/trillion BTU	Emission Factor Rating	Reference
Gas Fired Units	None	0.37	U	95

Coal Combustion

Lead emission factors for coal-fired utility boilers are presented in Tables 5-8 and 5-9. The tables include composite emission factors for anthracite, bituminous pulverized wet-bottom, and bituminous pulverized dry-bottom boilers. The emission factors include particulate lead.[55]

Lead emission factors for coal-fired industrial and commercial/institutional boilers are listed in Tables 5-10 and 5-11, respectively. Composite emission factors for two industrial boiler design categories, pulverized bituminous dry-bottom boilers and bituminous stokers, are presented. Control configurations include uncontrolled and multicyclone controlled. Both sets of lead emission factors represent particulate lead emissions.[76,98,99]

AP-42, Section 1.1 also includes an equation for bituminous coal, subbituminous coal and lignite combustion. This equation can be used for both controlled and uncontrolled boilers. The equation is also applicable to all typical firing configurations of utility, industrial and commercial/industrial boilers. The equation for lead is as follows:

$$\text{Lead emissions (lb/10}^{12}\text{ BTU)} = 3.4 \left[\left(\frac{C}{A} * PM \right)^{0.8} \right]$$

where:

C	=	concentration of metal in the coal, parts per million by weight (ppmwt)
A	=	weight fraction of ash in the coal. For example, 10% ash is 0.1 ash fraction
PM	=	site-specific emission factor for total particulate matter, lb/10^6 Btu.

The factors produced by the equation should be applied to heat input.[97]

TABLE 5-8. LEAD EMISSION FACTORS FOR COAL-FIRED UTILITY BOILERS

SCC Number	Emission Source	Control Device	Average Emission Factor in lb/ton (kg/Mg)[a]	Emission Factor Range in lb/ton (kg/Mg)[a]	Emission Factor Rating	Reference
1-01-001-02	Anthracite Coal Traveling Grate Overfeed Stoker	None	8.90×10^{-3} (4.45×10^{-3})	---	E	96
1-01-002-01	Bituminous Coal: Pulverized: Wet Bottom	None	5.07×10^{-4} lb/MMBtu[b] (2.18×10^{-13} kg/Joule)	---	E	97
1-01-002-02	Bituminous Coal: Pulverized: Dry Bottom	None	5.07×10^{-4} lb/MMBtu[b] (2.18×10^{-13} kg/Joule)	---	E	97
		ESP, FF or venturi scrubber	4.20×10^{-4} lb/ton[c] (2.10×10^{-4} kg/Mg)	---	A	97
1-01-002-03	Bituminous Coal: Cyclone Furnace	None	5.07×10^{-4} lb/MMBtu[b] (2.18×10^{-13} kg/Joule)	---	E	97
		ESP, FF or venturi scrubber	4.20×10^{-4} lb/ton[c] (2.10×10^{-4} kg/Mg)	---	A	97
1-01-002-04	Bituminous Coal: Spreader Stoker	None	5.07×10^{-4} lb/MMBtu[b] (2.18×10^{-13} kg/Joule)	---	E	97
1-01-002-05	Bituminous Coal: Traveling Grate (Overfeed) Stoker	None	5.07×10^{-4} lb/MMBtu[b] (2.18×10^{-13} kg/Joule)	---	E	97
1-01-002-21	Subbituminous Coal: Pulverized: Wet Bottom	None	5.07×10^{-4} lb/MMBtu[b] (2.18×10^{-13} kg/Joule)	---	E	97

TABLE 5-8. LEAD EMISSION FACTORS FOR COAL-FIRED UTILITY BOILERS (CONTINUED)

SCC Number	Emission Source	Control Device	Average Emission Factor in lb/ton (kg/Mg)[a]	Emission Factor Range in lb/ton (kg/Mg)[a]	Emission Factor Rating	Reference
1-01-002-22	Subbituminous Coal: Pulverized: Dry Bottom	None	5.07×10^{-4} lb/MMBtu[b] (2.18×10^{-13} kg/Joule)	---	E	97
		ESP, FF or venturi scrubber	4.20×10^{-4} lb/ton[c] (2.10×10^{-4} kg/Mg)	---	A	97
1-01-002-23	Subbituminous Coal: Cyclone Furnace	None	5.07×10^{-4} lb/MMBtu[b] (2.18×10^{-13} kg/Joule)	---	E	97
		ESP, FF or venturi scrubber	4.20×10^{-4} lb/ton[c] (2.10×10^{-4} kg/Mg)	---	A	97
1-01-002-24	Subbituminous Coal: Spreader Stoker	None	5.07×10^{-4} lb/MMBtu[b] (2.18×10^{-13} kg/Joule)	---	E	97
1-01-002-25	Subbituminous Coal: Traveling Grate (Overfeed) Stoker	None	5.07×10^{-4} lb/MMBtu[b] (2.18×10^{-13} kg/Joule)	---	E	97

[a] Emission factors are expressed in lb (kg) of pollutant emitted per ton (Mg) of coal combusted, except as noted.
[b] Emission factors are expressed in lb (kg) of pollutant emitted per MMBtu (Joule) of heat input.
[c] Emission factor should be applied to coal feed, as fired.

"---" means data are not available.

TABLE 5-9. LEAD EMISSION FACTORS FOR COAL-FIRED BOILERS FROM UTILITY STUDY

Emission Source	Control Device	Median Factor (lb/trillion BTU)	Emission Factor Rating	Reference
Coal Fired Units	PM Control	4.8	U	95
	PM/SO_2 Control	5.8	U	95

TABLE 5-10. LEAD EMISSION FACTORS FOR COAL-FIRED INDUSTRIAL BOILERS

SCC Number	Emission Source	Control Device	Average Emission Factor in lb/ton (kg/Mg)[a]	Emission Factor Range in lb/ton (kg/Mg)[a]	Emission Factor Rating	Reference
1-02-001-04	Anthracite Coal Traveling Grate (Overfeed) Stoker	None	8.90×10^{-3} (4.45×10^{-3})	---	E	96
1-02-002-01	Bituminous Coal Pulverized: Wet Bottom	None	5.07×10^{-4} lb/MMBtu[b] (2.18×10^{-13} kg/Joule)	---	E	97
1-02-002-02	Bituminous Coal Pulverized Coal: Dry Bottom	None	5.07×10^{-4} lb/MMBtu[b] (2.18×10^{-13} kg/Joule)	---	E	97
		ESP, FF, or venturi scrubber	4.20×10^{-4} lb/ton[c] (2.10×10^{-4} kg/Mg)	---	A	97
1-02-002-03	Bituminous Coal Cyclone Furnace	None	5.07×10^{-4} lb/MMBtu[b] (2.18×10^{-13} kg/Joule)	---	E	97
		ESP, FF, or venturi scrubber	4.20×10^{-4} lb/ton[c] (2.10×10^{-4} kg/Mg)	---	A	97
1-02-002-04	Bituminous Coal Spreader Stoker	None	5.07×10^{-4} lb/MMBtu[b] (2.18×10^{-13} kg/Joule)	---	E	97
1-02-002-05	Bituminous Coal Overfeed Stoker	None	5.07×10^{-4} lb/MMBtu[b] (2.18×10^{-13} kg/Joule)	---	E	97
1-02-002-06	Bituminous Coal Underfeed Stoker	None	2.24×10^{-1} (1.12×10^{-1})	---	U	76
1-02-002-13	Bituminous Coal Wet Slurry	None	9.89×10^{-3} (4.95×10^{-3})	---	U	93
1-01-002-21	Subbituminous Coal: Pulverized: Wet Bottom	None	5.07×10^{-4} lb/MMBtu[b] (2.18×10^{-13} kg/Joule)	---	E	97

TABLE 5-10. LEAD EMISSION FACTORS FOR COAL-FIRED INDUSTRIAL BOILERS (CONTINUED)

SCC Number	Emission Source	Control Device	Average Emission Factor in lb/ton (kg/Mg)[a]	Emission Factor Range in lb/ton (kg/Mg)[a]	Emission Factor Rating	Reference
1-01-002-22	Subbituminous Coal: Pulverized: Dry Bottom	None	5.07×10^{-4} lb/MMBtu[b] (2.18×10^{-13} kg/Joule)	---	E	97
		ESP, FF, or venturi scrubber	4.20×10^{-4} lb/ton[c] (2.10×10^{-4} kg/Mg)	---	A	97
1-01-002-23	Subbituminous Coal: Cyclone Furnace	None	5.07×10^{-4} lb/MMBtu[b] (2.18×10^{-13} kg/Joule)	---	E	97
		ESP, FF, or venturi scrubber	4.20×10^{-4} lb/ton[c] (2.10×10^{-4} kg/Mg)	---	A	97
1-01-002-24	Subbituminous Coal: Spreader Stoker	None	5.07×10^{-4} lb/MMBtu[b] (2.18×10^{-13} kg/Joule)	---	E	97
1-01-002-25	Subbituminous Coal: Traveling Grate (Overfeed) Stoker	None	5.07×10^{-4} lb/MMBtu[b] (2.18×10^{-13} kg/Joule)	---	E	97

[a] Emission factors are expressed in lb (kg) of pollutant emitted per ton (Mg) of coal combusted, except as noted.
[b] Emission factors are expressed in lb (kg) of pollutant emitted per MMBtu (Joule) of heat input.
[c] Emission factor should be applied to coal feed, as fired.
"---" means data are not available.

TABLE 5-11. LEAD EMISSION FACTORS FOR COAL-FIRED COMMERCIAL/INSTITUTIONAL BOILERS

SCC Number	Emission Source	Control Device	Average Emission Factor in lb/ton (kg/Mg)[a]	Emission Factor Range in lb/ton (kg/Mg)[a]	Emission Factor Rating	Reference
1-03-001-02	Anthracite Coal Traveling Grate (Overfeed) Stoker	None	8.90×10^{-3} (4.45×10^{-3})	---	E	96
1-03-002-08	Bituminous Coal Underfeed Stoker	Multiple Cyclone without Flyash Reinjection	1.21×10^{-3} (6.05×10^{-4})	---	U	98
1-03-002-03	Bituminous Coal Cyclone Furnace	None	5.07×10^{-4} lb/MMBtu[b] (2.18×10^{-13} kg/Joule)	---	E	97
		ESP, FF, or venturi scrubber	4.20×10^{-4} lb/ton (2.10×10^{-4} kg/Mg)[c]	---	A	97
1-03-002-05	Bituminous Coal Pulverized: Wet Bottom	None	5.07×10^{-4} lb/MMBtu[b] (2.18×10^{-13} kg/Joule)	---	E	97
1-03-002-06	Bituminous Coal Pulverized Coal: Dry Bottom	None	5.07×10^{-4} lb/MMBtu[b] (2.18×10^{-13} kg/Joule)	---	E	97
		ESP, FF, or venturi scrubber	4.20×10^{-4} lb/ton (2.10×10^{-4} kg/Mg)[c]	---	A	97
1-03-002-07	Bituminous Coal Overfeed Stoker	None	5.07×10^{-4} lb/MMBtu[b] (2.18×10^{-13} kg/Joule)	---	E	97
1-03-002-09	Bituminous Coal Spreader Stoker	None	5.07×10^{-4} lb/MMBtu[b] (2.18×10^{-13} kg/Joule)	---	E	97
1-03-002-21	Subbituminous Coal: Pulverized: Wet Bottom	None	5.07×10^{-4} lb/MMBtu[b] (2.18×10^{-13} kg/Joule)	---	E	97

TABLE 5-11. LEAD EMISSION FACTORS FOR COAL-FIRED COMMERCIAL/INSTITUTIONAL BOILERS (CONTINUED)

SCC Number	Emission Source	Control Device	Average Emission Factor in lb/ton (kg/Mg)[a]	Emission Factor Range in lb/ton (kg/Mg)[a]	Emission Factor Rating	Reference
1-03-002-22	Subbituminous Coal: Pulverized: Dry Bottom	None	5.07×10^{-4} lb/MMBtu[b] (2.18×10^{-13} kg/Joule)	---	E	97
		ESP, FF, or venturi scrubber	4.20×10^{-4} lb/ton (2.10×10^{-4} kg/Mg)[c]	---	A	97
1-03-002-23	Subbituminous Coal: Cyclone Furnace	None	5.07×10^{-4} lb/MMBtu[b] (2.18×10^{-13} kg/Joule)	---	E	97
		ESP, FF, or venturi scrubber	4.20×10^{-4} lb/ton (2.10×10^{-4} kg/Mg)[c]	---	A	97
1-03-002-24	Subbituminous Coal: Spreader Stoker	None	5.07×10^{-4} lb/MMBtu[b] (2.18×10^{-13} kg/Joule)	---	E	97
1-03-002-25	Subbituminous Coal: Traveling Grate (Overfeed) Stoker	None	5.07×10^{-4} lb/MMBtu[b] (2.18×10^{-13} kg/Joule)	---	E	97

[a] Emission factors are expressed in lb (kg) of pollutant emitted per ton (Mg) of coal combusted, except as noted.
[b] Emission factors are expressed in lb (kg) of pollutant emitted per MMBtu/Joule of heat input.
[c] Emission factor should be applied to coal feed, as fired.
"---" means data are not available.

Oil Combustion

Lead emission factors for oil-fired utility boilers are presented in Tables 5-12 and 5-13. Lead emission factors for oil-fired industrial and commercial/institutional boilers are presented in Tables 5-14 through 5-17.

Emission factors for specific utility boiler and control device configurations are also listed in Table 5-12, as are emission factors for residual oil and distillate oil combustion.

Lead emission factors for oil-fired industrial boilers are presented in Table 5-14. The data used in factor development came from the testing of two uncontrolled units. Testing was conducted using CARB Method 436. The emission factors represent particulate lead.[100]

A lead emission factor for oil-fired commercial/institutional boilers is provided in Table 5-15. The average emission factor is based on a boiler with a rated capacity of less than 10 MMBtu/hr (2.9 MW).[101]

Lead emission factors for industrial and commercial/institutional waste oil combustion are shown in Tables 5-16 and 5-17, respectively. Emission factors are available for two basic types of uncontrolled space heaters: a vaporizing pot-type burner and an air atomizing burner. The use of both blended and unblended fuels is reflected in these factors.

Solid Waste Combustion

Lead emission factors for solid-waste fired utility boilers are presented in Table 5-18.

Miscellaneous Combustion

Lead emission factors for industrial boilers firing other fuel types (i.e., solid waste refuse-derived fuel) are presented in Table 5-19.

TABLE 5-12. LEAD EMISSION FACTORS FOR OIL-FIRED UTILITY BOILERS

SCC Number	Emission Source	Control Device	Average Emission Factor in lb/MMBtu (kg/Joule)[a]	Emission Factor Range in lb/MMBtu (kg/Joule)[a]	Emission Factor Rating	Reference
1-01-004-01	Residual Oil-fired Boiler: No. 6 Oil, Normal Firing	None	1.0×10^{-5} (4.33×10^{-15})	---	C	102
		Flue Gas Recirculation	2.17×10^{-5} (9.35×10^{-15})	1.26×10^{-5} - 2.83×10^{-5} 5.43×10^{-15} - 1.22×10^{-14})	U	103
1-01-004-04	Residual Oil-fired Boiler: No. 6 Oil, Tangential Firing	None	1.0×10^{-5} (4.33×10^{-15})	---	C	102
1-01-004-05	Residual Oil-fired Boiler: No. 5 Oil, Normal Firing	None	1.60×10^{-5} (6.89×10^{-15})	---	U	104
1-01-005-01	Distillate Oil Grades 1 and 2 Oil	None	8.90×10^{-6} (3.84×10^{-15})	---	E	102

[a] Emission factors are expressed in lb (kg) of pollutant emitted per MMBtu (Joule) of heat input.

"---" means data are not available.

TABLE 5-13 LEAD EMISSION FACTORS FOR OIL-FIRED UTILITY BOILER FROM UTILITY STUDY

Emission Source	Control Device	Median Factor (lb/trillion BTU)	Emission Factor Rating	Reference
Oil-Fired Units	PM Control	2.6	U	95
	PM/SO_2 Control	9.0	U	95

TABLE 5-14. LEAD EMISSION FACTORS FOR OIL-FIRED INDUSTRIAL BOILERS

SCC Number	Emission Source	Control Device	Average Emission Factor in lb/MMBtu (kg/Joule)[a]	Emission Factor Range in lb/MMBtu (kg/Joule)[a]	Emission Factor Rating
1-02-004-01	Residual Oil Grade 6 Oil	None	1.00×10^{-5}[(b)] (4.33×10^{-15})		C
1-02-005-01	Distillate Oil Grades 1 and 2 Oil	None	8.90×10^{-6} (3.84×10^{-15})	---	E

Source: Reference 102

[a] Emission factors are expressed in lb (kg) of pollutant emitted per MMBtu (Joule) of heat input.
[b] Emission factor is in lb x 10^3 gal, to convert to kb/10^3 L, multiply by 0.12.
"---" means data are not available.

TABLE 5-15. LEAD EMISSION FACTORS FOR OIL-FIRED COMMERCIAL/INSTITUTIONAL BOILERS

SCC Number	Emission Source	Control Device	Average Emission Factor in lb/MMBtu (kg/Joule)[a]	Emission Factor Range in lb/MMBtu (kg/Joule)[a]	Emission Factor Rating
1-03-004-01	Residual Oil Grade 6 Oil	None	1.00×10^{-5}[(b)] (4.33×10^{-15})	---	C
1-03-005-01	Distillate Oil Grades 1 and 2 Oil	None	8.90×10^{-6} (3.84×10^{-15})	---	E

Source: Reference 102

[a] Emission factors are expressed in lb (kg) of pollutant emitted per MMBtu (Joule) of heat input.
[b] Emission factor is in lb/10^3 gal, to convert to kg/10^3 L, multiply by 0.12.
"---" means data are not available.

TABLE 5-16. LEAD EMISSION FACTORS FOR WASTE OIL-FIRED INDUSTRIAL BOILERS

SCC Number	Emission Source	Control Device	Average Emission Factor in lb/1000 gal (kg/kL)[a]	Emission Factor Range in lb/1000 gal (kg/kL)[a]	Emission Factor Rating	Reference
1-02-013-02	Waste Oil	None	1.68 (2.01×10^{-1})	---	U	105
1-05-001-13	Waste Oil Air Atomized Burner	None	50L[b] (6.0L)	---	D	106

[a] Emission factors are expressed in lb (kg) of pollutant emitted per 1000 gallons (kL) of oil combusted.
[b] L=weight % lead in fuel. Multiply numeric value by L to obtain emission factor.
"---" means data are not available.

TABLE 5-17. LEAD EMISSION FACTORS FOR WASTE OIL-FIRED COMMERCIAL/INSTITUTIONAL BOILERS

SCC Number	Emission Source	Control Device	Average Emission Factor in lb/1000 gal (kg/kL)[a]	Emission Factor Range in lb/1000 gal (kg/kL)[a]	Emission Factor Rating	Reference
1-01-013-02	Waste Oil	None	1.68 (2.01×10^{-1})	---	U	23
1-05-002-13	Waste Oil Air Atomized Burner	None	50L[b] (6.0L)	---	D	106

[a] Emission factors are expressed in lb (kg) of pollutant emitted per 1000 gallons (kL) of oil combusted.
[b] L=weight % lead in fuel. Multiply numeric value by L to obtain emission factor.

"---" means data are not available.

TABLE 5-18. LEAD EMISSION FACTORS FOR SOLID WASTE-FIRED UTILITY BOILERS

SCC Number	Emission Source	Control Device	Average Emission Factor in lb/ton (kg/Mg)[a]	Emission Factor Range in lb/ton (kg/Mg)[a]	Emission Factor Rating	Reference
1-01-012-01	Solid Waste	None	2.65×10^{-1} (1.33×10^{-1})	2.00×10^{-1} - 3.40×10^{-1} (1.00×10^{-1} - 1.70×10^{-1})	U	108
		ESP	1.24×10^{-4} lb/MMBtu (5.34×10^{-14} kg/Joule)[b]	8.15×10^{-5} - 2.04×10^{-4} lb/MMBtu (1.51×10^{-14} - 3.78×10^{-14} kg/Joule)[b]	C	108
		Spray Dryer/Absorber/ESP	$<2.66 \times 10^{-4}$ ($<1.33 \times 10^{-4}$)	$<1.30 \times 10^{-4}$ - 3.66×10^{-4} ($<6.50 \times 10^{-5}$ - 1.83×10^{-4})	U	109

[a] Emission factors are expressed in lb (kg) of pollutant emitted per ton (Mg) of waste combusted, except as noted.
[b] Emission factors are expressed in lb (kg) of pollutant emitted per MMBtu (Joule) of heat input.

"---" means data are not available.

ESP = Electrostatic Precipitator.

TABLE 5-19. LEAD EMISSION FACTORS FOR MISCELLANEOUS INDUSTRIAL BOILERS

SCC Number	Emission Source	Control Device	Average Emission Factor in lb/ton (kg/Mg)[a]	Emission Factor Range in lb/ton (kg/Mg)[a]	Emission Factor Rating
1-02-012-02	Solid Waste Refuse-derived Fuel	None	1.30×10^{-1} (6.50×10^{-2})	---	U

Source: Reference 23

[a] Emission factors are expressed in lb (kg) of pollutant emitted per ton (Mg) of waste combusted.

"---" means data are not available.

5.2 STATIONARY INTERNAL COMBUSTION SOURCES

5.2.1 Source Description

Internal combustion sources for electricity generation and industrial application are grouped into two types: gas turbines and reciprocating engines.

Stationary gas turbines are applied in electric power generators, in gas pipeline pump and compressor drives, and various process industries. Gas turbines greater than 3 MW are used in electricity generation for continuous, peaking, or standby power. The primary fuels used are natural gas and distillate (No. 2) fuel oil.[107]

Reciprocating internal combustion engines may be classified as spark ignition and compression ignition. Spark ignition engines are fueled by volatile liquids such as gasoline, while compression ignition engines use liquid fuels of low volatility, such as kerosene and distillate oil (diesel fuel).[110]

In compression ignition engines, combustion air is compression-heated in the cylinder and diesel fuel oil is then injected into this hot air. Ignition is spontaneous because the air is above the autoignition temperature of the fuel. Spark ignition engines initiate combustion with an electrical discharge. Usually, fuel is mixed with air in a carburetor (for gasoline) or at the intake valve (for natural gas), but fuel can also be injected directly into the cylinder.[111]

The rated power of gasoline and diesel internal combustion engines covers a substantial range: up to 250 hp (186 kW) for gasoline engines and greater than 600 hp (447 kW) for diesel engines. The primary domestic use of large stationary diesel engines (greater than 600 hp) is in oil and gas exploration and production. These engines supply mechanical power to operate drilling (rotary table), mud pumping, and hoisting equipment and may also operate pumps or auxiliary power generators.[112] Stationary natural gas-fired spark ignition engines of over 5,000 hp and natural gas-fired turbines of over 10,000 hp exist.

5.2.2 Emissions

Air emissions from the flue gas stack are the only emissions from electricity generation, industrial turbines, and reciprocating engines. Turbines firing distillate or residual oil may emit trace metals carried over from the metals content of the fuel.

An emissions assessment study of internal combustion sources developed in 1979 presents a lead emission factor for distillate oil-fired gas turbines of 5.8×10^{-5} lb/MMBtu (25 picogram/joule [pg/J]).[110] More recent test results for distillate oil-fired gas turbines indicate an average lead emission factor of 2.9×10^{-5} lb/MMBtu.[113] The data used to develop these emission factors are limited and may not be representative of a specific source or population of sources. However, the emission factors provide order-of-magnitude levels of lead emissions for turbines fired with distillate oil. Emissions of trace elements, including lead, from the gas-fired gas turbine tested during the 1979 study were insignificant.[110]

If the fuel analysis is known, the metals content of the fuel should be used for flue gas emission factors, assuming all metals pass through the turbine.[107] The average fuel analysis result can be used to calculate emissions based on fuel usage or stack exhaust flow measurements. Potential emissions based on the trace element content of distillate oils have been calculated and compared with measured stack emissions.[110] In almost all cases, the potential emissions were higher than the measured emissions. Limited lead emissions and lead emission factors were available for the other emission sources indicated in this section.

5.3 MUNICIPAL WASTE INCINERATION

5.3.1 Source Location

As of January 1992, there were 160 municipal waste combustor (MWC) plants operating in the United States with capacities greater than 40 tons/day (36 Mg/day), with a total capacity of approximately 110,000 tons/day (100,000 Mg/day) of municipal solid waste (MSW). It is projected that by 1997, total MWC capacity will approach 165,000 tons/day

(150,000 Mg/day), which represents approximately 28 percent of the estimated total amount of MSW that will be generated in the United States by the year 2000.[114] Table 5-20 lists the geographical distribution of MWC units and statewide capacities.[115]

5.3.2 Process Description

MWCs burn garbage and other nonhazardous solid waste, commonly called MSW. Three main types of combustors are used to combust MSW: mass burn, refuse-derived fuel-fired (RDF), and modular. Each type is discussed in this section.

Mass Burn Combustors

In mass burn units, MSW is combusted without any preprocessing other than removal of items too large to go through the feed system. In a typical mass burn combustor, refuse is placed on a grate that moves through the combustor. Combustion air in excess of stoichiometric amounts is supplied both below (underfire air) and above (overfire air) the grate. Mass burn combustors are erected at the site (as opposed to being prefabricated) and range in size from 50 to 1,000 tons/day (46 to 900 Mg/day) of MSW throughput per unit. Mass burn combustors can be divided into mass burn/waterwall (MB/WW), mass burn/rotary waterwall (MB/RC), and mass burn/refractory wall (MB/REF) designs.

The walls of a MB/WW combustor are constructed of metal tubes that contain pressurized water and recover radiant heat for production of steam and/or electricity. A typical MB/WW combustor is shown in Figure 5-5. With the MB/RC combustor, a rotary combustion chamber sits at a slight angle and rotates at about 10 revolutions per hour, causing the waste to advance and tumble as it burns. The combustion cylinder consists of alternating water tubes and perforated steel plates. Figure 5-6 illustrates a simplified process flow diagram for a MB/RC. MB/REF designs are older and typically do not include any heat recovery. One type of MB/REF combustor is shown in Figure 5-7.

TABLE 5-20. SUMMARY OF GEOGRAPHICAL DISTRIBUTION OF MWC FACILITIES

State	Number of MWC Facilities	State MWC Capacity in tons/day (Mg/day)	Percentage of Total U.S. MWC Capacity
Alabama	2	990 (900)	1
Alaska	2	170 (150)	<1
Arkansas	5	380 (350)	<1
California	3	2,560 (2,330)	2
Connecticut	9	6,660 (6,050)	6
Delaware	1	600 (550)	<1
District of Columbia	1	1,000 (910)	1
Florida	14	17,350 (15,770)	16
Georgia	1	500 (450)	<1
Hawaii	1	2,760 (2,510)	2
Idaho	1	50 (45)	<1
Illinois	1	1,600 (1,450)	1
Indiana	1	2,360 (2,150)	2
Iowa	1	200 (180)	<1
Maine	4	1,870 (1,700)	2

TABLE 5-20. SUMMARY OF GEOGRAPHICAL DISTRIBUTION OF MWC FACILITIES (CONTINUED)

State	Number of MWC Facilities	State MWC Capacity in tons/day (Mg/day)	Percentage of Total U.S. MWC Capacity
Maryland	3	3,810 (3,460)	3
Massachusetts	10	10,340 (9,400)	9
Michigan	5	4,820 (4,380)	4
Minnesota	13	5,330 (4,850)	5
Mississippi	1	150 (140)	<1
Missouri	1	78 (71)	<1
Montana	1	72 (65)	<1
New Hampshire	4	860 (780)	1
New Jersey	6	5,820 (5,290)	5
New York	15	12,510 (11,370)	11
North Carolina	4	780 (710)	1
Ohio	4	4,800 (4,360)	4
Oklahoma	2	1,230 (1,120)	1
Oregon	3	810 (740)	1
Pennsylvania	6	7,200 (6,550)	6

TABLE 5-20. SUMMARY OF GEOGRAPHICAL DISTRIBUTION OF MWC FACILITIES (CONTINUED)

State	Number of MWC Facilities	State MWC Capacity in tons/day (Mg/day)	Percentage of Total U.S. MWC Capacity
Puerto Rico	1	1,040 (950)	1
South Carolina	2	840 (760)	1
Tennessee	4	1,480 (1,350)	1
Texas	4	240 (220)	<1
Utah	1	400 (360)	<1
Virginia	9	6,840 (6,220)	6
Washington	5	1,500 (1,360)	1
Wisconsin	9	1,360 (1,240)	1
TOTAL	160	111,400 (101,200)	100

Source: Reference 115

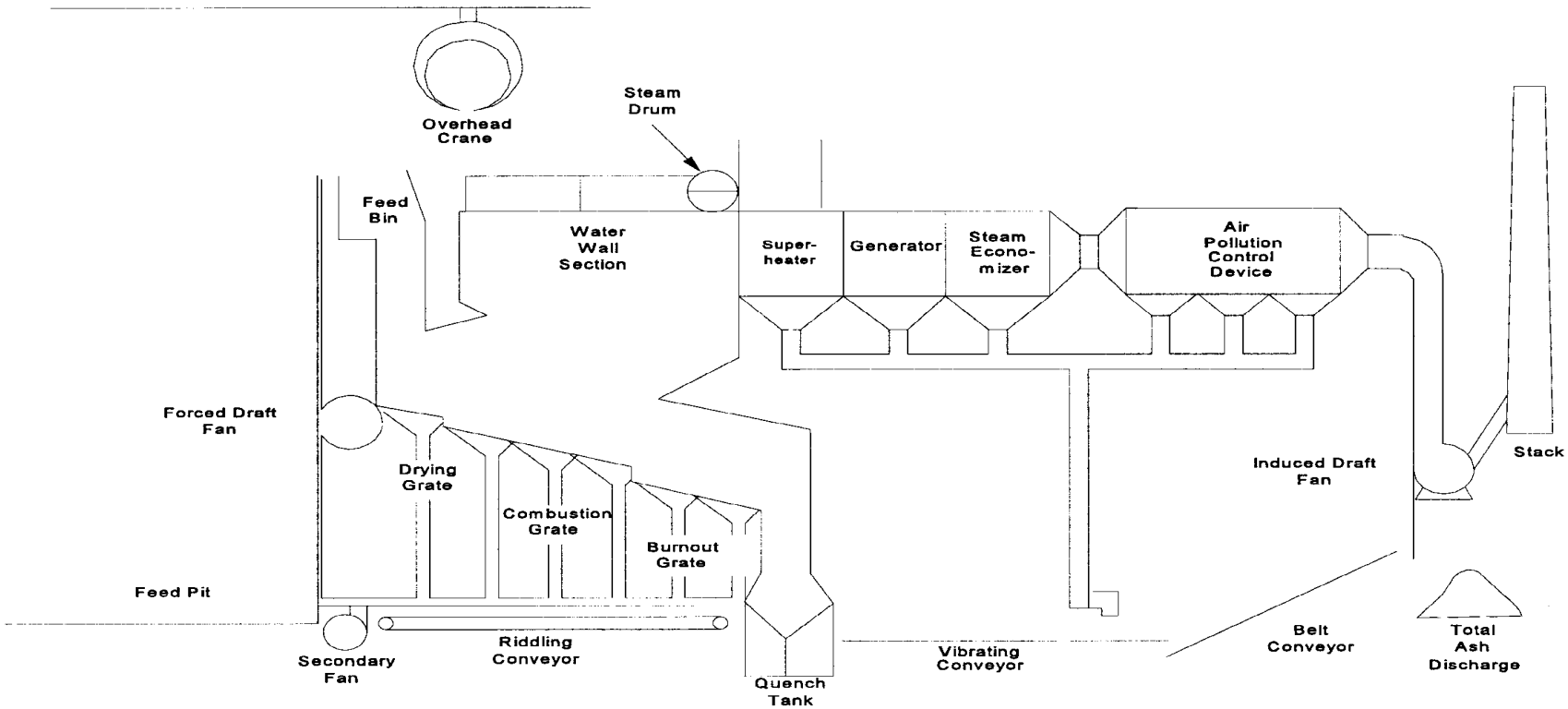

Figure 5-5. Typical Mass Burn Waterwall Combustor

Source: Reference 114.

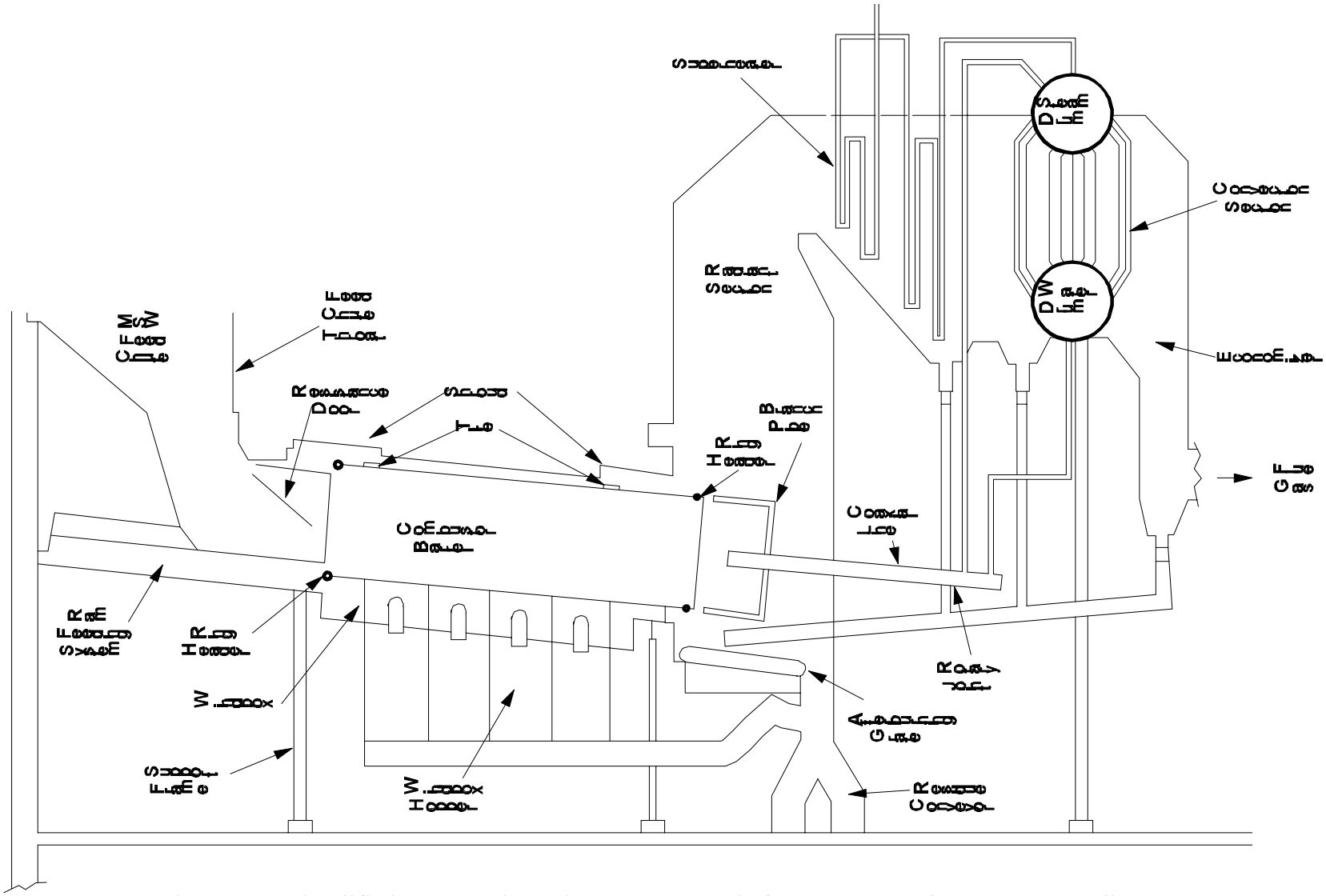

Figure 5-6. Simplified Process Flow Diagram, Gas Cycle for a Mass Burn/Rotary Waterwall Combustor

Source: Reference 114.

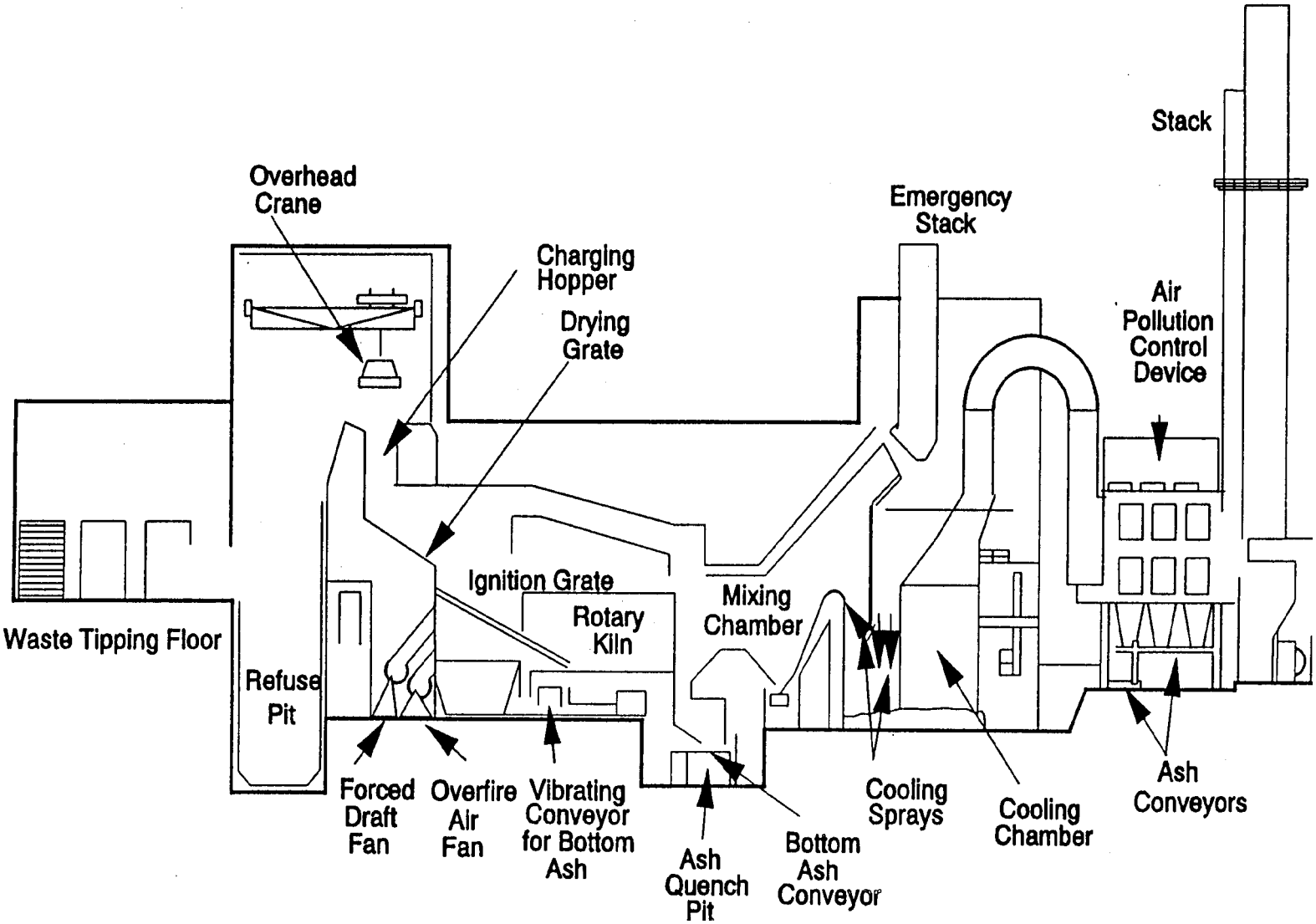

Figure 5-7. Mass Burn Refractory-Wall Combustor with Grate/Rotary Kiln

Source: Reference 114.

RDF-Fired Combustors

RDF-fired combustors burn processed waste that varies from shredded waste to finely divided fuel suitable for co-firing with pulverized coal. Combustor sizes range from 320 to 1,400 tons/day (290 to 1,300 Mg/day). There are three major types of RDF-fired combustors: dedicated RDF combustors, which are designed to burn RDF as a primary fuel; coal/RDF co-fired combustors; and fluidized-bed combustors (FBCs), where waste is combusted on a turbulent bed of limestone, sand, silica or aluminum.

A typical RDF-fired combustor is shown in Figure 5-8 . Waste processing usually consists of removing noncombustibles and shredding, which generally raises the heating value and provides a more uniform fuel. The type of RDF used depends on the boiler design. Most boilers designed to burn RDF use spreader stokers and fire fluff RDF in a semi-suspension mode.

Modular Combustors

Modular combustors are similar to mass burn combustors in that they burn waste that has not been pre-processed, but they are typically shop-fabricated and generally range in size from 5 to 140 tons/day (4 to 130 Mg/day) of MSW throughput. One of the most common types of modular combustors is the starved-air or controlled-air type, which incorporates two combustion chambers. A process diagram of a typical modular starved-air (MOD/SA) combustor is presented in Figure 5-9. Air is supplied to the primary chamber at sub-stoichiometric levels. The incomplete combustion products (CO and organic compounds) pass into the secondary combustion chamber, where additional air is added and combustion is completed. Another design is the modular excess air (MOD/EA) combustor, which consists of two chambers, similar to MOD/SA units, but is functionally like the mass burn unit in that it uses excess air in the primary chamber.

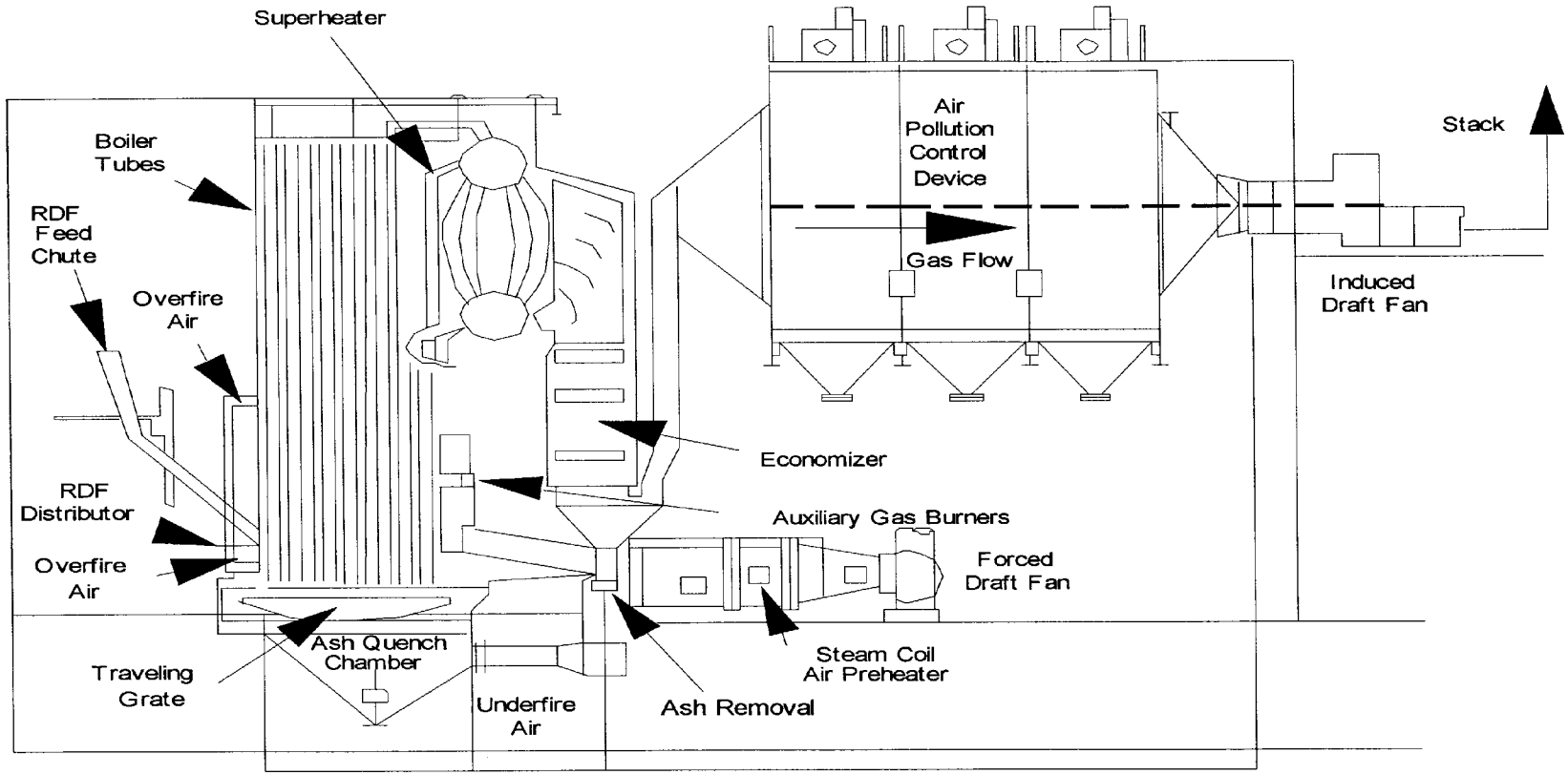

Figure 5-8. Typical RDF-Fired Spreader Stoker Boiler

Source: Reference 114.

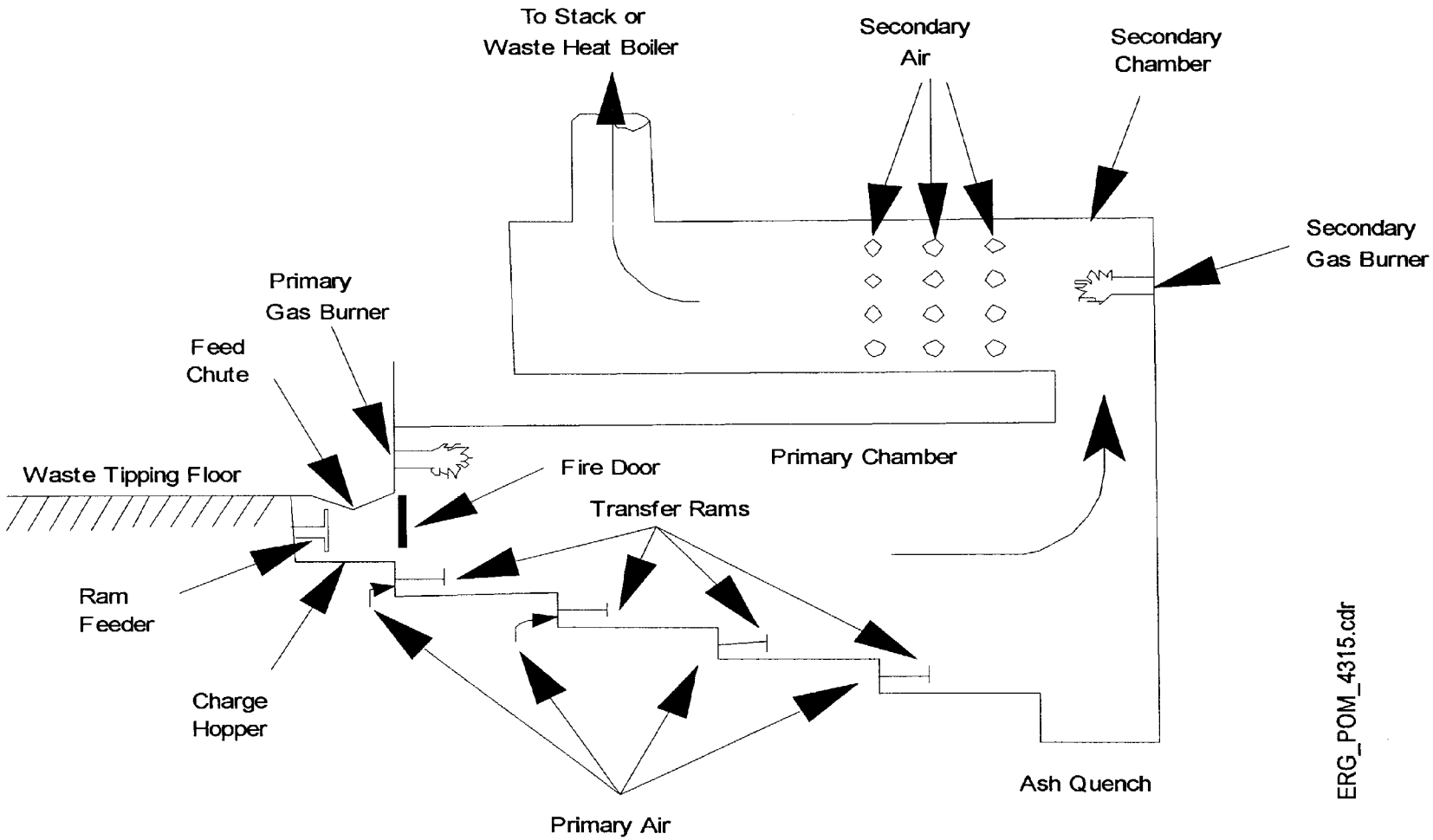

Figure 5-9. Typical Modular Starved-Air Combustor with Transfer Rams

Source: Reference 114.

Emission Control Techniques

Lead is present in a variety of MSW streams, including paper, inks, batteries, and metal cans, but is most prevalent in plastics. Lead is used to make dyes and stabilizers that protect plastics from thermal and photo degradation. Because of the wide variability in MSW composition, lead emissions are highly variable and are independent of combustor type. Because the vapor pressure of lead is such that condensation develops onto particulates in the flue gas, lead can be effectively removed by a PM control device.[114]

Because lead is usually emitted from MWCs in particulate form, the control of lead is most frequently accomplished through the use of an ESP or fabric filter (FF), which are common PM control techniques. Although other PM control technologies (e.g., cyclones, electrified gravel beds, and venturi scrubbers) are available, they are not as effective as the ESP or FF at removing PM and so are seldom used on existing systems.[114] Well-designed ESPs and FFs operated at 450°F (230°C) or less remove over 97 percent of lead and other metals.[116]

The most common types of ESPs are plate-and-wire units, in which the discharge electrode is a bottom-weighted or rigid wire, and flat plate units, which use flat plates rather than wires as the discharge electrode. As a general rule, the greater the amount of collection plate area, the greater the PM collection efficiency. After the charged particles are collected on the grounded plates, the resulting dust layer is removed from the plates by rapping or washing and collected in a hopper. As the dust layer is removed, some of the collected PM becomes re-entrained in the flue gas. To ensure good PM collection efficiency during plate cleaning and electrical upsets, ESPs have several fields located in series along the direction of flue gas flow that can be energized and cleaned independently. Particles re-entrained when the dust layer is removed from one field can be recollected in a downstream field. Because of this phenomenon, increasing the number of fields generally improves PM removal efficiency.[114]

5.3.3 Emissions

Available lead emission factor data for several types of MWCs are provided in Table 5-21. The column labeled "Emission Source" identifies the main characteristics of each incinerator type. For some types of incinerators, a range of factors is provided that represents different sample test runs of the same source. Generally, there is a wide range in the emission factors associated with MWCs. This range is attributable to the variability of waste compositions and to the operating practices and effectiveness of control devices.[117] Waste composition can differ from one MWC unit to another, especially where the permit specifications for the accepted waste are different. For example, an MWC with a permit that prohibits the burning of lead-acid batteries will have lower lead emissions than an MWC with a permit that does not prohibit such burning. Because of this variability, the factors shown in Table 5-21 must be used cautiously and may not be representative of other MWCs.

5.4 INDUSTRIAL AND COMMERCIAL WASTE INCINERATION

5.4.1 Source Location

Commercial waste incinerators are generally located in urbanized, metropolitan areas with highly concentrated populations. Locations of industrial waste incinerators parallel those of the industries that use them for waste disposal. The lumber and wood products, primary metals, and printing industries are the greatest users of incinerators for waste disposal. Lumber and wood producers are primarily in the Southeast and Northwest. Primary metals plants are predominantly in the Midwest, the Mideast, and the Southwest. The printing industry is essentially distributed nationwide.[64] There are numerous industrial and commercial waste incinerators across the country; no specific information on locations of individual incinerators was identified.

TABLE 5-21. LEAD EMISSION FACTORS FOR MUNICIPAL WASTE COMBUSTION SOURCES

SCC Number	Emission Source	Control Device	Average Emission Factor in lb/ton (kg/Mg)[a]	Emission Factor Range in lb/ton (kg/Mg)[a]	Emission Factor Rating	Reference
5-01-001-01	Starved-Air: Multiple-Chamber	None	1.20×10^{-1} (6.00×10^{-2})	---	U	23
		ESP	2.82×10^{-3} (1.41×10^{-3})	---	C	114
5-01-001-02	Mass Burn: Single-Chamber	None	1.80×10^{-1} (9.00×10^{-2})	---	U	23
5-01-001-03	Refuse-derived Fuel	None	2.01×10^{-1} (1.00×10^{-1})	---	C	114
		ESP	3.66×10^{-3} (1.83×10^{-3})	---	A	114
		Spray Dryer/FF	1.04×10^{-3} (5.20×10^{-4})	---	D	114
		Spray Dryer/ESP	1.16×10^{-3} (5.80×10^{-4})	---	B	114
5-01-001-04	Mass Burn: Refractory Wall Combustor	None	2.13×10^{-1} (1.07×10^{-1})	---	A	114
		Spray Dryer/FF	2.61×10^{-4} (1.31×10^{-4})	---	A	114
		Spray Dryer/ESP	9.15×10^{-4} (4.58×10^{-4})	---	A	114
		Dry Sorbent Injection/FF	2.97×10^{-4} (1.49×10^{-4})	---	C	114
		Dry Sorbent Injection/ESP	2.90×10^{-3} (1.45×10^{-3})	---	E	114
		ESP	3.00×10^{-3} (1.50×10^{-3})	---	A	114

TABLE 5-21. LEAD EMISSION FACTORS FOR MUNICIPAL WASTE COMBUSTION SOURCES (CONTINUED)

SCC Number	Emission Source	Control Device	Average Emission Factor in lb/ton (kg/Mg)[a]	Emission Factor Range in lb/ton (kg/Mg)[a]	Emission Factor Rating	Reference
5-01-001-05	Mass Burn: Waterwall Combustor	None	2.13×10^{-1} (1.07×10^{-1})	---	A	114
		Spray Dryer/FF	2.61×10^{-4} (1.31×10^{-4})	---	A	114
		Spray Dryer/ESP	9.15×10^{-4} (4.58×10^{-4})	---	A	114
		Dry Sorbent Injection/FF	2.97×10^{-4} (1.49×10^{-4})	---	C	114
		Dry Sorbent Injection/ESP	2.90×10^{-3} (1.45×10^{-3})	---	E	114
		ESP	3.00×10^{-3} (1.50×10^{-3})	---	A	114
5-01-001-06	Mass Burn: Rotary Waterwall Combustor	None	2.13×10^{-1} (1.07×10^{-1})	---	A	114
		Spray Dryer/FF	2.61×10^{-4} (1.31×10^{-4})	---	A	114
		Spray Dryer/ESP	9.15×10^{-4} (4.58×10^{-4})	---	A	114
		Dry Sorbent Injection/FF	2.97×10^{-4} (1.49×10^{-4})	---	C	114
		Dry Sorbent Injection/ESP	2.90×10^{-3} (1.45×10^{-3})	---	E	114
		ESP	3.00×10^{-3} (1.50×10^{-3})	---	A	114

TABLE 5-21. LEAD EMISSION FACTORS FOR MUNICIPAL WASTE COMBUSTION SOURCES (CONTINUED)

SCC Number	Emission Source	Control Device	Average Emission Factor in lb/ton (kg/Mg)[a]	Emission Factor Range in lb/ton (kg/Mg)[a]	Emission Factor Rating	Reference
5-01-001-07	Modular Excess Air Combustor	None	2.13×10^{-1} (1.07×10^{-1})	---	A	114
		Spray Dryer/FF	2.61×10^{-4} (1.31×10^{-4})	---	A	114
		Spray Dryer/ESP	9.15×10^{-4} (4.58×10^{-4})	---	A	114
		Dry Sorbent Injection/FF	2.97×10^{-4} (1.49×10^{-3})	---	C	114
		Dry Sorbent Injection/ESP	2.90×10^{-3} (1.45×10^{-3})	---	E	114
		ESP	3.00×10^{-3} (1.50×10^{-3})	---	A	114

[a] Emission factors are expressed in lb (kg) of pollutant emitted per ton (Mg) of waste incinerated.

"---" means data are not available.

ESP = Electrostatic Precipitator.
FF = Fabric Filter.

5.4.2 Process Description

Similar to municipal waste incinerators, some solid waste is also incinerated in industrial and commercial facilities. Most individual waste incinerators at these sites are subject to State and local air quality regulations, such that these units have varying degrees of emissions control. Most incinerators are equipped with afterburners, and newer incinerators may have scrubbers or ESPs.[64]

Industrial wastes combusted in incinerators consist primarily of processing wastes and plant refuse containing paper, plastic, rubber, textiles, and wood. Because of the variety of manufacturing operations, waste composition is highly variable among plants, but may be fairly consistent within a plant. Industrial waste incinerators have basically the same design as small municipal waste incinerators. Available data indicate that approximately 91 percent of the units are multichamber designs, 8 percent are single-chamber designs, and 1 percent are rotary kiln or fluidized bed design.

About 1,500 of the estimated 3,800 industrial incinerators are used for volume reduction, 640 units (largely in the petroleum and chemical industries) are used for toxicity reduction, and the remaining 1,700 units are used for resource recovery, primarily at copper wire and electric motor plants.[64]

Commercial waste incinerators, typically small, multichamber incinerators, are used to reduce the volume of wastes from large office and living complexes, schools, and commercial facilities. Over 90 percent of such units require firing of an auxiliary fuel. Emissions controls are generally not present on commercial units.[64]

Lead emissions from industrial and commercial waste incineration are a function of waste composition, incinerator design and operating practices, and incinerator emissions control equipment. Both the incineration of wastes and the combustion of incinerator auxiliary fuel may be sources of lead emissions. Incinerator design and operating practices affect waste mixing, residence time in the flame zone, combustion stoichiometry, and other factors that contribute to

the amount of lead emissions generated. The type of emissions control used dictates whether lead in the form of PM or a gaseous pollutant is controlled and to what extent. Generally, lead emissions exist in both particulate and some gaseous forms, with available data indicating that particulate lead emissions often predominate. Incinerators with emission controls designed primarily for PM collection may be accomplishing most of the lead emissions control.

5.4.3 Emissions

At the time this report was compiled, there were no available emission factors for lead emissions from industrial/commercial waste incinerators. Most of the incinerators used by commercial and industrial facilities are multichamber designs. The process and control device configurations for incinerators at industrial and commercial facilities are the same as those used by municipalities. The emission factors for municipal incinerators, however, would not be accurate to use for industrial and commercial facilities because these two types of facilities incinerate different types of waste. The waste streams at industrial and commercial sites are highly variable. One plant might burn wood protected with lead-based paint, which would yield high lead emissions. Another plant might burn wooden boxes and pallets that have low lead content. As a result, very little data has been developed that accurately characterizes lead emissions from industrial/commercial incinerators.

5.5 SEWAGE SLUDGE INCINERATORS

5.5.1 Source Location

There are approximately 200 sewage sludge incineration plants operating in the United States.[118] Most sewage sludge incinerators (SSIs) are located in the eastern United States, although there are a significant number on the West Coast. New York has the largest number of facilities with 33; Pennsylvania and Michigan have the next largest number with 21 and 19 sites, respectively.[119]

5.5.2 Process Description

The first step in the process of sewage sludge incineration is dewatering the sludge. Sludge is generally dewatered until it is about 15 to 30 percent solids, at which point it will burn without supplemental fuel. After dewatering, the sludge is sent to the incinerator for combustion. The two main types of SSIs currently in use are the multiple-hearth furnace (MHF) and the fluidized-bed combustor (FBC). Over 80 percent of the identified operating SSIs are MHFs and about 15 percent are FBCs. The remaining SSIs co-fire MSW with sludge.[120]

Multiple-Hearth Furnaces

A cross-sectional diagram of a typical MHF is shown in Figure 5-10. The basic MHF is a vertically oriented cylinder. The outer shell is constructed of steel and lined with refractory material and surrounds a series of horizontal refractory hearths. A hollow cast iron rotating shaft runs through the center of the hearths. Cooling air is introduced into the shaft, which extends above the hearths. Attached to the central shaft are the rabble arms, which extend above the hearths. Each rabble arm is equipped with a number of teeth approximately 6 inches in length and spaced about 10 inches apart. The teeth are shaped to rake the sludge in a spiral motion, alternating in direction from the outside in to the inside out between hearths. Burners, which provide auxiliary heat, are located in the sidewalls of the hearths.

In most MHFs, partially dewatered sludge is fed onto the perimeter of the top hearth. The rabble arms move the sludge through the incinerator by raking the sludge toward the center shaft, where it drops through holes located at the center of the hearth. In the next hearth, the sludge is raked in the opposite direction. This process is repeated in all of the subsequent hearths. The effect of the rabble motion is to break up solid material to allow better surface contact with heat and oxygen. A sludge depth of about 1 inch is maintained in each hearth at the design sludge flow rate.

Under normal operating conditions, 50 to 100 percent excess air must be added to an MHF to ensure complete combustion of the sludge. Besides enhancing contact between the

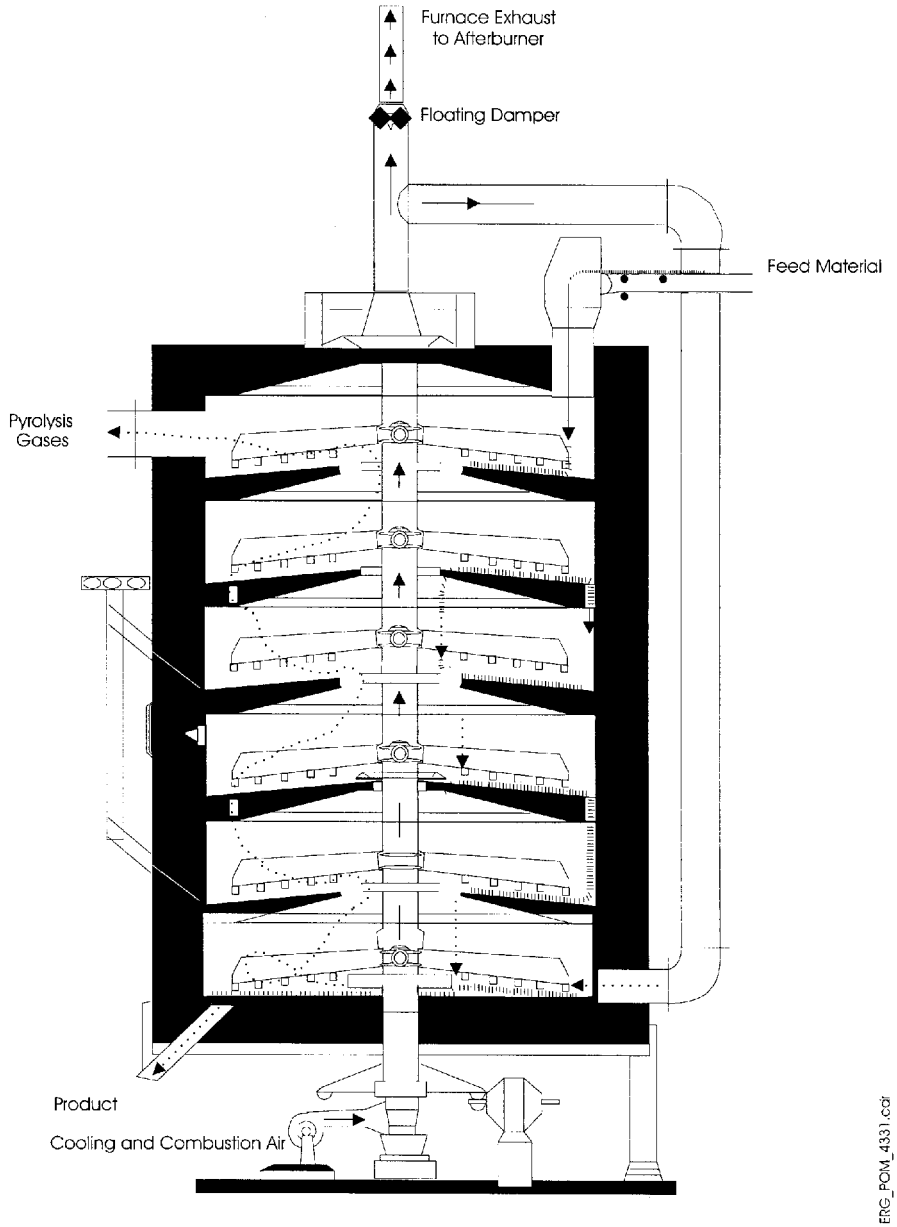

Figure 5-10. Typical Multiple-Hearth Furnace

Source: Reference 120.

fuel and the oxygen in the furnace, these relatively high rates of excess air are necessary to compensate for normal variations in both the organic characteristics of the sludge feed and the rate at which it enters the incinerator. When an inadequate amount of excess air is available, only partial oxidation of the carbon will occur, with a resultant increase in emissions of CO, soot, and hydrocarbons. Too much excess air, on the other hand, can cause increased entrainment of particulate and unnecessarily high auxiliary fuel consumption.[120]

Fluidized-Bed Combustors

Figure 5-11 shows the cross-section diagram of an FBC. FBCs consist of a vertically oriented outer shell constructed of steel and lined with refractory material. Tuyeres (nozzles designed to deliver blasts of air) are located at the base of the furnace within a refractory-lined grid. A bed of sand approximately 2.5 feet (0.75 meters) thick rests upon the grid. Two general configurations can be distinguished based on how the fluidizing air is injected into the furnace. In the hot windbox design, the combustion air is first preheated by passing it through a heat exchanger, where heat is recovered from the hot flue gases. Alternatively, ambient air can be injected directly into the furnace from a cold windbox.

Partially dewatered sludge is fed into the lower portion of the furnace. Air injected through the tuyeres at a pressure of 3 to 5 pounds per square inch gauge (20 to 35 kilopascals) simultaneously fluidizes the bed of hot sand and the incoming sludge. Temperatures of 1,400 to 1,700°F (750 to 925°C) are maintained in the bed. As the sludge burns, fine ash particles are carried out of the top of the furnace. Some sand is also removed in the air stream and must be replaced at regular intervals.

Combustion of the sludge occurs in two zones. Within the sand bed itself (the first zone), evaporation of the water and pyrolysis of the organic materials occur nearly simultaneously as the temperature of the sludge is rapidly raised. In the freeboard area (the second zone), the remaining free carbon and combustible gases are burned. The second zone functions essentially as an afterburner.

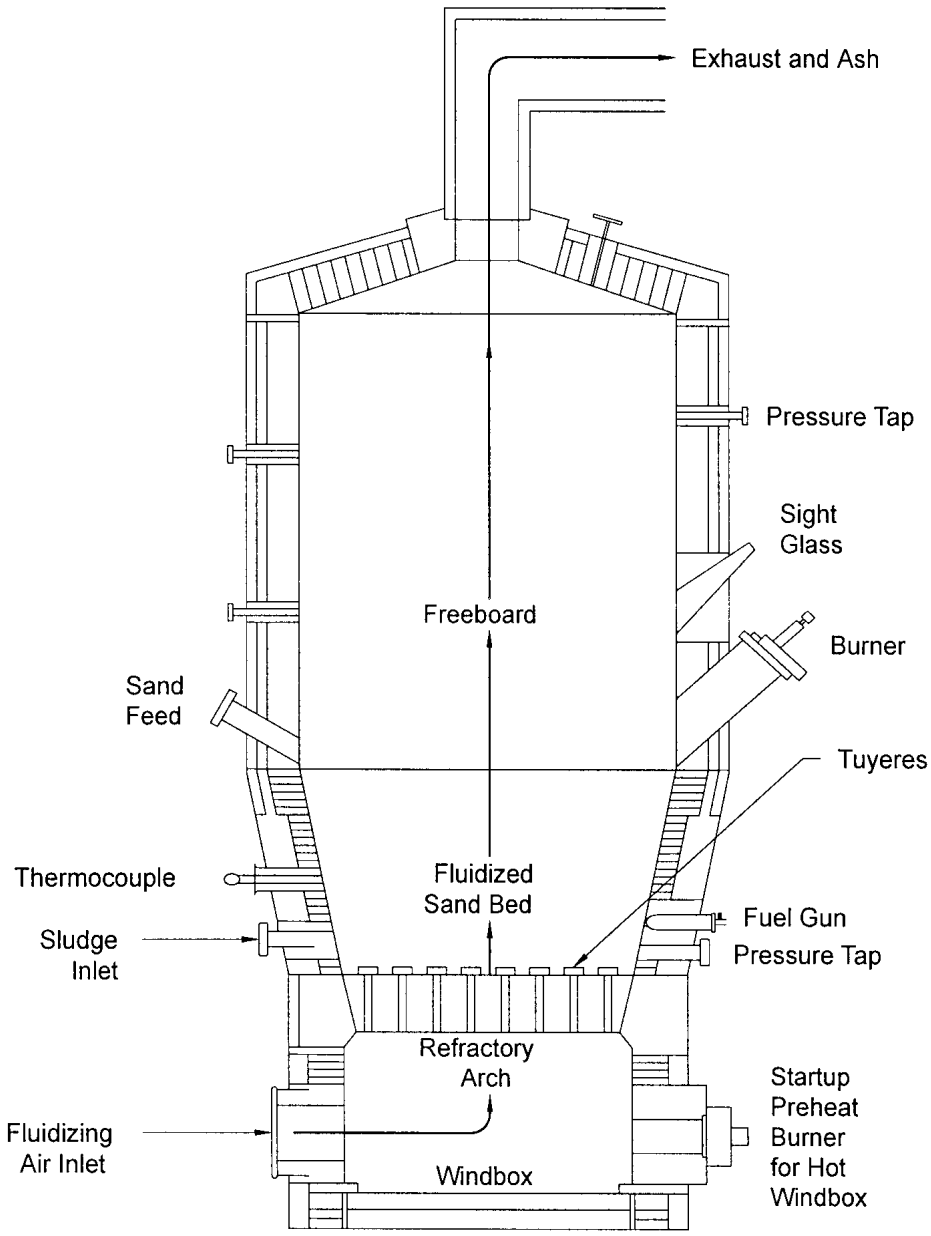

Figure 5-11. Fluidized-Bed Combustor

Source: Reference 120.

Fluidization achieves nearly ideal mixing between the sludge and the combustion air; the turbulence facilitates the transfer of heat from the hot sand to the sludge. A FBC improves the burning atmosphere, such that a limited amount of excess air is required for complete combustion of the sludge. Typically, FBCs can achieve complete combustion with 20 to 50 percent excess air, about half the excess air required by MHFs. As a consequence, FBCs generally have lower fuel requirements than MHFs.[120]

Emission Control Techniques

The emission rates of lead in SSIs are affected by the following conditions:

- Sludge metal content;
- Operating bed temperature;
- Sludge chlorine content;
- Flow patterns leading to solids drop-out ahead of APCD; and
- APCD control efficiency as a function of particle size.

Clearly, the quantity of lead in the feed sludge is the basic scalar of emissions. Lead in sludge arises from several sources, including industrial discharges (especially plating wastes), corrosion of outtake plumbing materials, street runoff (especially deposited lead compounds from lead-containing paints), and numerous lesser domestic and industrial activities. The lead content varies from day to day, reflecting a diversity of waste types.

The temperature of the combustion environment influences the behavior of lead emissions because of the following sequence of events during incineration:

1. At elevated temperatures, many heavy metal compounds (including lead) vaporize. The higher the temperature, the larger the fraction of lead that is vaporized.

2. As temperatures drop, a fraction of the lead condenses. Condensation takes place in proportion to available surface area.

3. Collection of the lead condensed on the PM occurs while passing through the APCD system.

Sludge chlorine content increases the sensitivity of lead emissions to bed temperature, such that the lead volatilizes at a lower temperature than if there were no chlorine in the sludge. This behavior is due to the high volatility of the metal chlorides ($PbCl_2$) versus metal oxides (PbO).[60] Monitoring and limiting the sludge chlorine content allows more lead to condense onto PM for more effective lead emissions control.

Lead emissions may be reduced by using PM control devices, reducing incinerator and APCD temperatures, and controlling sludge chlorine content. The types of existing SSI PM controls include low-pressure-drop spray towers, wet cyclones, high-pressure-drop venturi scrubbers, and venturi/impingement tray scrubber combinations. A few ESPs and baghouses are employed, primarily where sludge is co-fired with MSW. The most widely used PM control device applied to an MHF is the impingement tray scrubber. Older units use the tray scrubber alone; combination venturi/impingement tray scrubbers are widely applied to newer MHFs and some FBCs.[120]

5.5.3 Emissions

Table 5-22 presents lead emission factors for SSIs. The factors presented cover the two main incinerator types: MHFs and FBCs. Again, as the emission factor tables for the other types of incinerators (previously discussed) show, PM type control technologies offer the greatest efficiency for reducing lead emissions.

5.6 MEDICAL WASTE INCINERATION

Medical waste incinerators (MWIs) burn both infectious ("red bag" and pathological) medical wastes and non-infectious general hospital wastes. The primary purposes of MWIs are to (1) render the waste innocuous, (2) reduce the volume and mass of the waste, and (3) provide waste-to-energy conversion.

TABLE 5-22. LEAD EMISSION FACTORS FOR SEWAGE SLUDGE INCINERATOR SOURCES

SCC Number	Emission Source	Control Device	Average Emission Factor in lb/ton (kg/Mg)[a]	Emission Factor Range in lb/ton (kg/Mg)[a]	Emission Factor Rating	Reference
5-01-005-15	Multiple-hearth Furnace	None	1.00×10^{-1} (5.00×10^{-2})	---	B	120
		Single Cyclone/Venturi Scrubber	6.00×10^{-3} (3.00×10^{-3})	---	E	120
		Single Cyclone	6.00×10^{-2} (3.00×10^{-2})	---	E	120
		ESP	2.00×10^{-3} (1.00×10^{-3})	---	E	120
		Venturi Scrubber	1.80×10^{-3} (9.00×10^{-4})	---	E	120
		Venturi Scrubber/Wet ESP	1.80×10^{-4} (9.00×10^{-5})	---	E	120
		Venturi Scrubber/ Impingement-type Wet Scrubber	6.00×10^{-2} (3.00×10^{-2})	---	B	120
		Venturi Scrubber/ Impingement-type Wet Scrubber/Afterburner	1.00×10^{-1} (5.00×10^{-2})	---	E	120
		Impingement-type Wet Scrubber	4.00×10^{-2} (2.00×10^{-2})	---	E	120
		Single Cyclone/Venturi Scrubber/Impingement Scrubber	2.20×10^{-2} (1.10×10^{-2})	---	E	120

TABLE 5-22. LEAD EMISSION FACTORS FOR SEWAGE SLUDGE INCINERATOR SOURCES (CONTINUED)

SCC Number	Emission Source	Control Device	Average Emission Factor in lb/ton (kg/Mg)[a]	Emission Factor Range in lb/ton (kg/Mg)[a]	Emission Factor Rating	Reference
5-01-005-16	Fludized Bed	None	4.00×10^{-2} (2.00×10^{-2})	---	E	120
		FF	1.00×10^{-5} (5.00×10^{-6})	---	E	120
		Impingement-type Wet Scrubber	6.00×10^{-3} (3.00×10^{-3})	---	E	120
		Venturi Scrubber Impingement-type Wet Scrubber	1.60×10^{-1} (8.00×10^{-2})	---	E	120
		Venturi Scrubber/ Impingement-type Wet Scrubber/ESP	2.00×10^{-6} (1.00×10^{-6})	---	E	120

5.6.1 Source Location

There are an estimated 6,000 MWIs in the United States, located at such facilities as hospitals, pharmaceutical companies, research facilities, nursing homes, and other institutions and companies that incinerate medical waste.[55] It is estimated that 90 percent of the nation's 6,872 hospitals (where the majority of MWIs are located) have some type of on-site incinerator, if only a small unit for incinerating special or pathological waste.[55]

5.6.2 Process Description

Three main types of incinerators are used as MWIs: controlled-air or starved-air, excess-air, and rotary kiln. The majority (>95 percent) of incinerators are controlled-air units. A small percentage (<2 percent) are excess-air, and less than 1 percent were identified as rotary kiln. The rotary kiln units tend to be larger and typically are equipped with air pollution control devices. Approximately two percent of all MWIs are equipped with air pollution control devices.[121]

Controlled-Air Incinerators

Controlled-air incineration is the most widely used MWI technology, and now dominates the market for new systems at hospitals and similar medical facilities. This technology is also known as two-stage incineration or modular combustion. Figure 5-12 presents a schematic diagram of a typical controlled-air unit.[121]

Combustion of waste in controlled-air incinerators occurs in two stages. In the first stage, waste is fed into the primary, or lower, combustion chamber, which is operated with less than the stoichiometric amount of air required for combustion. Combustion air enters the primary chamber from beneath the incinerator hearth (below the burning bed of waste). This air is called primary or underfire air. In the primary (starved-air) chamber, the low air-to-fuel ratio dries and facilitates volatilization of the waste and most of the residual carbon in the ash burns.

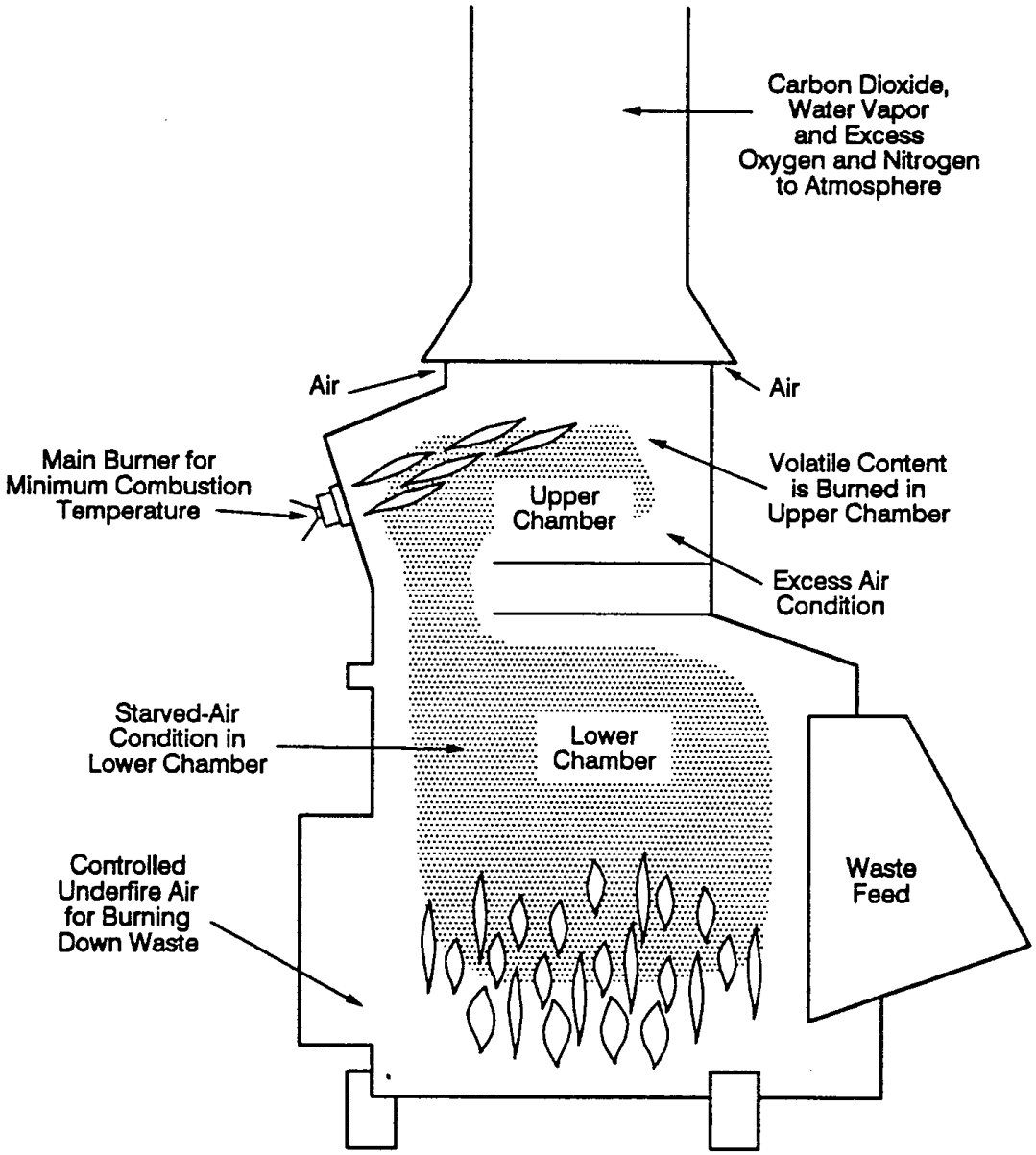

Figure 5-12. Controlled-Air Incinerator

Source: Reference 121.

At these conditions, combustion gas temperatures are relatively low (1,400 to 1,800°F [760 to 980°C]).[121]

In the second stage, excess air is added to the volatile gases formed in the primary chamber to complete combustion. Secondary chamber temperatures are higher than primary chamber temperatures--typically 1,800 to 2,000°F (980 to 1,095°C). Depending upon the heating value and moisture content of the waste, additional heat may be needed. Additional heat can be provided by auxiliary burners located at the entrance to the secondary (upper) chamber to maintain desired temperatures.[121]

Waste feed capacities for controlled-air incinerators range from about 75 to 6,500 lb/hr (0.6 to 50 kg/min) (at an assumed fuel heating value of 8,500 Btu/lb [19,700 kJ/kg]). Waste feed and ash removal can be manual or automatic, depending on the unit size and options purchased. Throughput capacities for lower-heating-value wastes may be higher because feed capacities are limited by primary chamber heat release rates. Heat release rates for controlled-air incinerators typically range from about 15,000 to 25,000 Btu/hr-ft^3 (430,000 to 710,000 kJ/hr-m^3).[121]

Excess-Air Incinerators

Excess-air incinerators are typically small, modular units. They are also referred to as batch incinerators, multiple-chamber incinerators, or "retort" incinerators. Excess-air incinerators are typically a compact cube with a series of internal chambers and baffles. Although they can be operated continuously, they are usually operated in batch mode.[121]

Figure 5-13 presents a schematic for an excess-air unit. Typically, waste is manually fed into the combustion chamber. The charging door is then closed, and an afterburner is ignited to bring the secondary chamber to a target temperature (typically 1,600 to 1,800°F [870 to 980°C]). When the target temperature is reached, the primary chamber burner ignites. The waste is dried, ignited, and combusted by heat provided by the primary chamber burner, as well as by radiant heat from the chamber walls. Moisture and volatile components in the waste

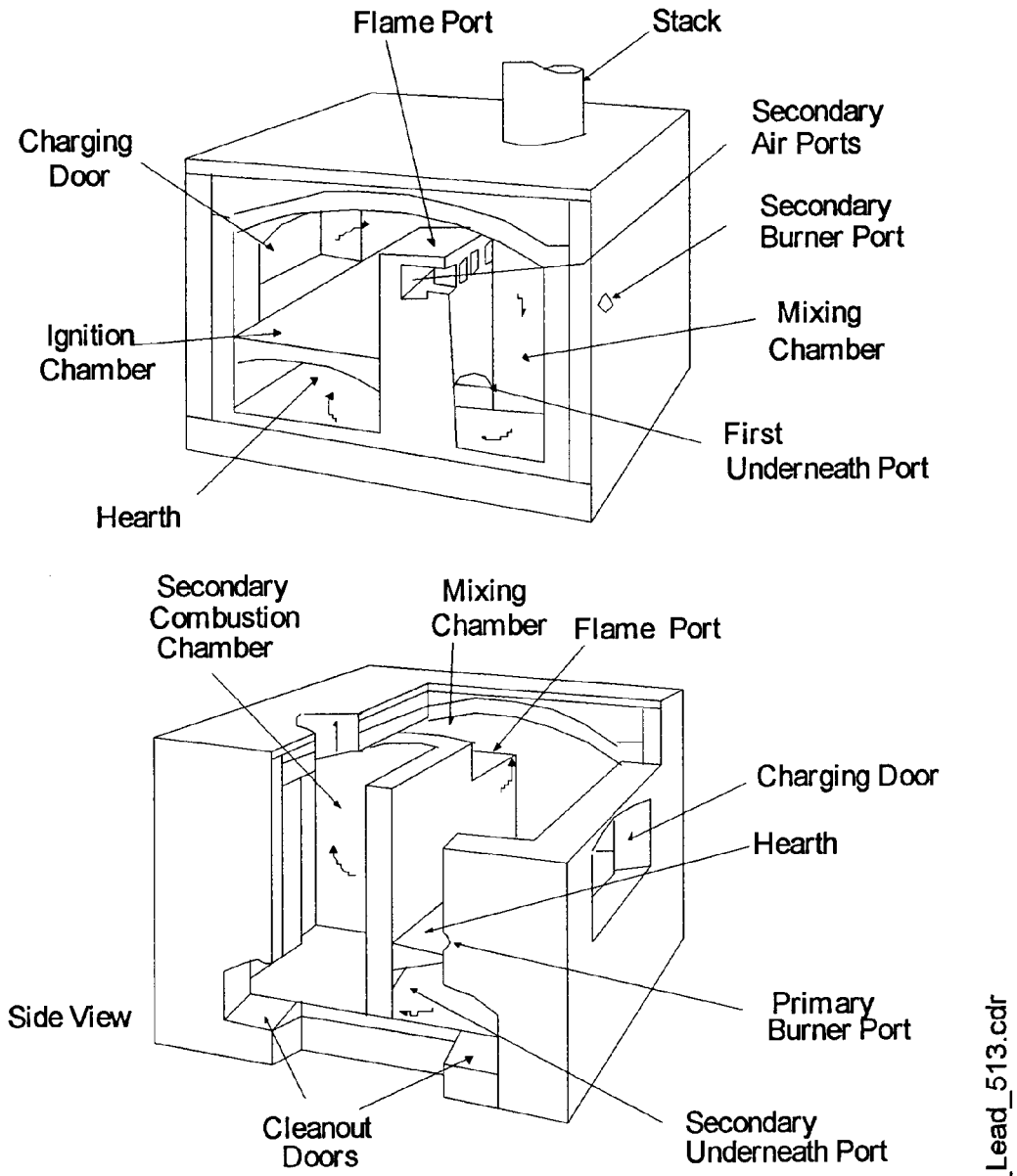

ERG_Lead_513.cdr

Figure 5-13. Excess-Air Incinerator

Source: Reference 121.

are vaporized and pass (along with combustion gases) out of the primary chamber and through a flame port that connects the primary chamber to the secondary or mixing chamber. Secondary air is added through the flame port and is mixed with the volatile components in the secondary chamber. Burners are also installed in the secondary chamber to maintain adequate temperatures for combustion of volatile gases. Gases exiting the secondary chamber are directed to the incinerator stack or to an air pollution control device. After the chamber cools, ash is manually removed from the primary chamber floor and a new charge of waste can be added.[121]

Incinerators designed to burn general hospital waste operate at excess air levels of up to 300 percent. If only pathological wastes are combusted, excess air levels near 100 percent are more common. The lower excess air helps maintain higher chamber temperature when burning high-moisture waste. Waste feed capacities for excess-air incinerators are usually 500 lb/hr (3.8 kg/min) or less.[121]

Rotary Kiln Incinerators

Rotary kiln incinerators are also designed with a primary chamber, where the waste is heated and volatilized, and a secondary chamber, where combustion of the volatile fraction is completed. The primary chamber consists of a slightly inclined, rotating kiln in which waste materials migrate from the feed end to the ash discharge end. The waste throughput rate is controlled by adjusting the rate of kiln rotation and the angle of inclination. Combustion air enters the primary chamber through a port. An auxiliary burner generally is used to start combustion and maintain desired combustion temperatures.

Figure 5-14 presents a schematic diagram of a typical rotary kiln incinerator. Volatiles and combustion gases pass from the primary chamber to the secondary chamber. The secondary chamber operates at excess air. Combustion of the volatiles is completed in the secondary chamber. Because of the turbulent motion of the waste in the primary chamber, solids burnout rates and particulate entrainment in the flue gas are higher for rotary kiln incinerators than for other incinerator designs. As a result, rotary kiln incinerators generally have add-on gas-cleaning devices.[121]

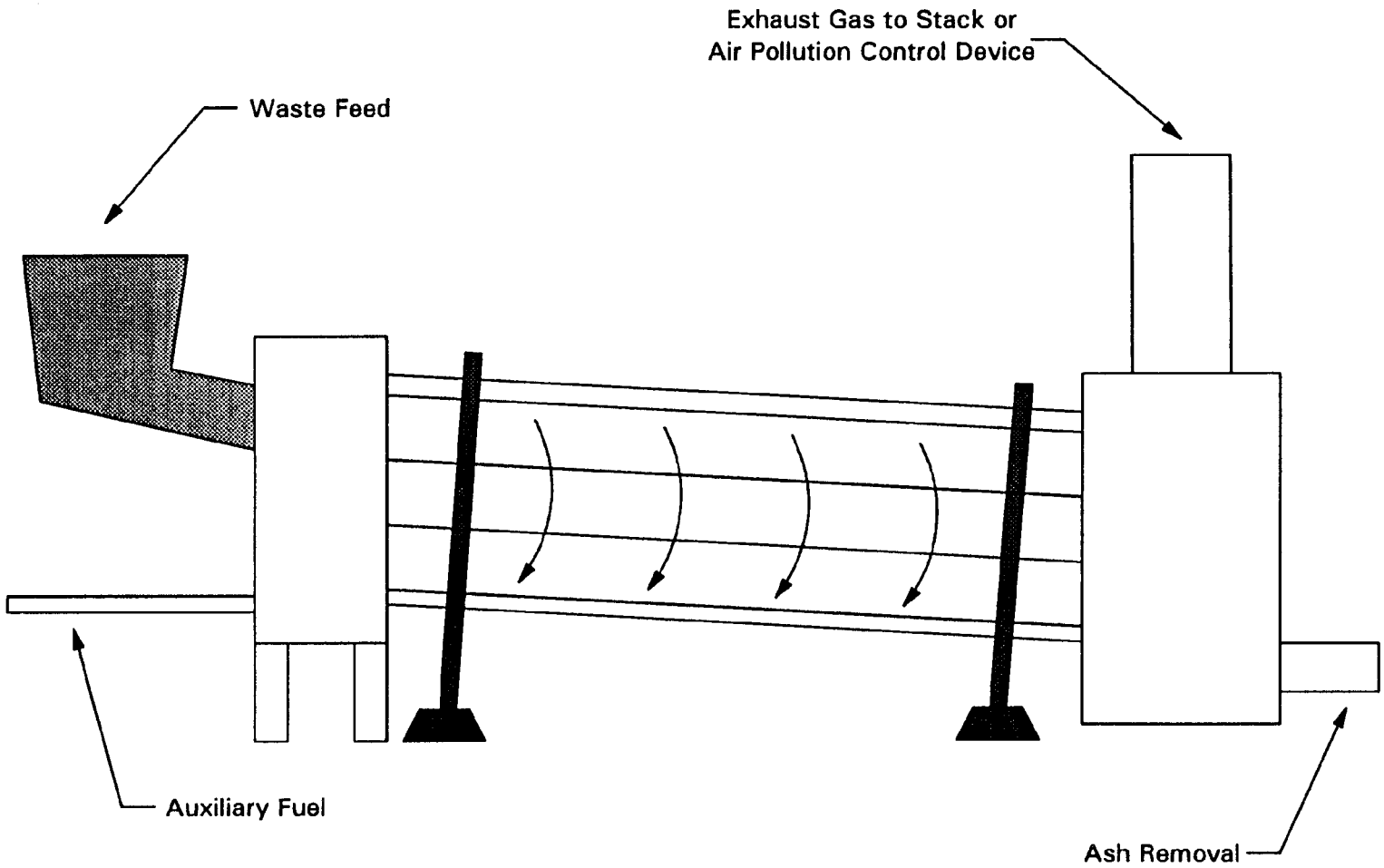

Figure 5-14. Rotary Kiln Incinerator

Source: Reference 121.

Emission Control Techniques

Medical waste contains toxic metals such as lead. Lead is found in many materials, including plastics, paper, inks, and electrical cable insulation. However, the primary source of lead appears to be plastics. Lead is used to make dyes and stabilizers that protect plastics from thermal and photo-degradation. The dyes made from lead are used to color plastic bags; thus, some of the lead emissions from MWIs could be due simply to the "red bags" that infectious waste is placed in. During incineration, lead only changes forms (chemical and physical states) but is not destroyed. Lead can be emitted from incinerators on small particles capable of penetrating deeply into human lungs.[122]

A majority of lead and other metal emissions is in the form of PM, and a minority is in vapor form. Particulate emissions of lead from the incineration of medical wastes are determined by three major factors:

1. Suspension of noncombustible inorganic materials containing lead;
2. Incomplete combustion of combustible lead materials; and
3. Condensation of lead-based vaporous materials (these materials are mostly inorganic matter).

Emissions of noncombustible materials result from the suspension or entrainment of ash by the combustion air added to the primary chamber of an incinerator. The more air that is added, the more likely that noncombustibles become entrained. Particulate emissions from incomplete combustion of combustible materials result from improper combustion control of the incinerator. Condensation of vaporous materials results from noncombustible substances that volatilize at primary combustion chamber temperatures with subsequent cooling in the flue gas. These materials usually condense on the surface of other fine particles.[122]

Typically, two strategies are used to minimize metals emissions: (1) combustion control in the primary chamber so as to inhibit vaporization or entrainment of metals, and

(2) capture of any metals that do escape by APCDs. Both of these strategies are discussed below. The key APCD parameters used are specific to the device that is used.

Combustion Control--Most MWIs are simple single-chamber units with an afterburner located in the stack. The ability of batch incinerators to control lead emissions is limited because only the temperature in the stack is usually monitored.

Most new incinerators are starved-air units. The primary chamber is designed to operate at low temperatures and low gas flow rates. This minimizes the amount of materials entrained or vaporized.

To ensure that lead emissions are minimized, operators must maintain the primary chamber at the temperatures and gas flow rates for which it was designed. Usually the only parameter that system operators can directly control is feed rate. High feed rates can lead to high temperatures and high gas velocities. Thus, many operators carefully control the feed rate. The feed rate is reduced when primary temperatures increase. Keeping the temperature low enables the lead to condense on different sizes of particles, which are then easily trapped by PM control devices.

APCD Control--When lead reaches the APCD, it is present in one of three forms. Non-volatile lead is present on large entrained particles. Lead that has vaporized and recondensed is usually enriched on fly-ash particles with diameters less than 1 micron. Extremely volatile lead is present as vapor.[122] The majority of lead emissions are in the first two forms and are controlled by PM control devices. Generally, particulate control is a surrogate for lead control in an incinerator/air pollution control system.[55]

5.6.3 Emissions

The available lead emission factors for MWIs are presented in Table 5-23. As with the other types of incinerators, waste composition is a critical factor in the amount of lead emitted from MWIs.

TABLE 5-23. LEAD EMISSION FACTORS FOR MEDICAL WASTE COMBUSTION SOURCES

SCC Number	Emission Source	Control Device	Average Emission Factor in lb/ton (kg/Mg)[a]	Emission Factor Range in lb/ton (kg/Mg)[a]	Emission Factor Rating	Reference
5-01-005-05	Other Incineration Pathological/Rotary Kiln	None	1.24×10^{-1} (6.20×10^{-2})	---	E	121
5-01-005-05	Other Incineration Pathological/ Controlled Air	None	7.28×10^{-2} (3.64×10^{-2})	---	B	121
5-01-005-05	Other Incineration Pathological	Wet Scrubber - High Efficiency	6.98×10^{-2} (3.49×10^{-2})	---	E	121
		Wet Scrubber - Medium Efficiency/FF	1.60×10^{-3} (8.00×10^{-4})	---	E	121
		FF	9.92×10^{-5} (4.96×10^{-5})	---	E	121
		Spray Dryer/ FF	1.89×10^{-4} (9.45×10^{-5})	---	E	121
		Spray Dryer/Carbon Injection/FF	7.38×10^{-5} (3.69×10^{-5})	---	E	121
		Dry Sorbent Injection/ ESP	4.70×10^{-3} (2.35×10^{-3})	---	E	121
		Dry Sorbent Injection/FF	6.25×10^{-5} (3.12×10^{1})	---	E	121
		Dry Sorbent Injection/ Carbon Injection/FF	9.27×10^{-5} (4.64×10^{-5})	---	E	121
		Dry Sorbent Injection/FF/Scrubber	5.17×10^{-5} (2.59×10^{-5})	---	E	121
		Wet Scrubber - Low Efficiency	7.94×10^{-2} (3.97×10^{-2})	---	E	121

TABLE 5-23. LEAD EMISSION FACTORS FOR MEDICAL WASTE COMBUSTION SOURCES (CONTINUED)

SCC Number	Emission Source	Control Device	Average Emission Factor in lb/ton (kg/Mg)[a]	Emission Factor Range in lb/ton (kg/Mg)[a]	Emission Factor Rating	Reference
5-02-005-05	Commercial - Incineration - Pathological	None (Rotary Kiln Incinerator)	1.24×10^{-1} (6.20×10^{-2})	---	E	121
		Afterburner	6.50×10^{-4} (3.30×10^{-4})	5.30×10^{-4} - 7.60×10^{-4} (2.70×10^{-4} - 3.80×10^{-4})	E	123
		FF	9.92×10^{-5} (4.96×10^{-5})	---	E	121
		Wet Scrubber - High Efficiency	6.98×10^{-2} (3.49×10^{-2})	---	E	121
		Wet Scrubber - Medium Efficiency/FF	1.60×10^{-3} (8.00×10^{-4})	---	E	121
		Spray Dryer/FF	1.89×10^{-4} (9.45×10^{-5})	---	E	121
		Spray Dryer/Carbon Injection/FF	7.38×10^{-5} (3.69×10^{-5})	---	E	121
		Dry Sorbent Injection/ESP	4.70×10^{-3} (2.35×10^{-3})	---	E	121
		Dry Sorbent Injection/Carbon Injection/FF	9.27×10^{-5} (4.64×10^{-5})	---	E	121
		Dry Sorbent Injection/FF	6.25×10^{-5} (3.13×10^{-5})	---	E	121
		None (Controlled Air Incinerator)	7.28×10^{-2} (3.64×10^{-2})	---	B	121
		Dry Sorbent Injection/ FF/Scrubber	5.17×10^{-5} (2.59×10^{-5})	---	E	121

TABLE 5-23. LEAD EMISSION FACTORS FOR MEDICAL WASTE COMBUSTION SOURCES (CONTINUED)

SCC Number	Emission Source	Control Device	Average Emission Factor in lb/ton (kg/Mg)[a]	Emission Factor Range in lb/ton (kg/Mg)[a]	Emission Factor Rating	Reference
5-02-005-05 (continued)	Commercial - Incineration - Pathological	Wet Scrubber - Low Efficiency	7.94×10^{-2} (3.97×10^{-2})	---	E	121

[a] Emission factors are expressed in lb (kg) of pollutant emitted per ton (Mg) of waste incinerated.

"---" means data are not available.

ESP = Electrostatic Precipitator.
FF = Fabric Filter.

The lead emission factors were developed from tests at facilities burning red bag waste, pathological waste, and/or general hospital waste. Red bag waste is defined as any waste generated in the diagnosis or immunization of human beings or animals; pathological waste is defined as any human and animal remains, tissues, and cultures; and general hospital waste was defined as a mixture of red bag waste and municipal waste generated by the hospital.

As with other combustion sources, the presented emission factors are highly dependent upon the composition of the waste. For example, the difference in the emission factors presented in Table 5-23 for both a high efficiency and medium efficiency wet scrubber applied to an MWI is expected to be more a function of the lead content of the waste burned than scrubber efficiency.

5.7 HAZARDOUS WASTE INCINERATION

Hazardous waste, as defined by 40 CFR Part 261, includes a wide variety of waste materials.[124] Hazardous wastes are produced in the form of liquids (e.g., waste oils, halogenated and nonhalogenated solvents, other organic liquids, and pesticides/herbicides) and sludges and solids (e.g., halogenated and nonhalogenated sludges and solids, dye and paint sludges, resins, and latex). The lead content of hazardous waste varies widely, but lead could be emitted from the incineration of any of these types of hazardous waste. Based on a 1986 study, total annual hazardous waste generation in the United States was approximately 292 million tons (265 million metric tons).[125] Only a small fraction of the waste (less than 1 percent) was incinerated. MACT standards for hazardous waste combustors and Portland cement manufacturing were proposed May 2, 1997 and March 24, 1998, respectively. These proposed standards should reduce lead emissions.

Based on an EPA study conducted in 1983, the major types of hazardous waste streams incinerated were spent nonhalogenated solvents and corrosive and reactive wastes contaminated with organics. Together, these accounted for 44 percent of the waste incinerated. Other prominent wastes included hydrocyanic acid, acrylonitrile bottoms, and nonlisted ignitable wastes.[126]

Industrial kilns, boilers, and furnaces are used to burn hazardous waste. They use the hazardous waste as fuel to produce commercial products such as cement, lime, iron, asphalt, or steam. In fact, the majority of hazardous waste generated in the United States is currently disposed of in cement kilns. Lead emissions from cement kilns are discussed in Section 5.13. Hazardous waste, which is an alternative to fossil fuels for energy and heat, is used at certain commercial facilities as a supplemental fuel. In the process of producing energy and heat, the hazardous wastes are subjected to high temperatures for a sufficient time to volatilize metals in the waste.

5.7.1 Source Location

Currently, 162 permitted or interim status incinerator facilities, having 190 units, are in operation in the United States. Another 26 facilities are proposed (i.e., new facilities under construction or permitting).[127] Of the above 162 facilities, 21 facilities are commercial facilities that burn about 700,000 tons of hazardous waste annually.[128] The remaining 141 are on-site or captive facilities and burn about 800,000 tons of waste annually.

5.7.2 Process Description

Hazardous waste incineration employs oxidation at high temperatures (usually 1,650°F [900°C] or greater) to destroy the organic fraction of the waste and reduce volume. A diagram of the typical process component options in a hazardous waste incineration facility is provided in Figure 5-15. The diagram shows the major subsystems that may be incorporated into a hazardous waste incineration system: waste preparation and feeding, combustion chamber(s), air pollution control, and residue/ash handling.

Five types of hazardous waste incinerators are currently available and in operation: liquid injection, rotary kiln, fixed-hearth, fluidized-bed, and fume injection.[129]

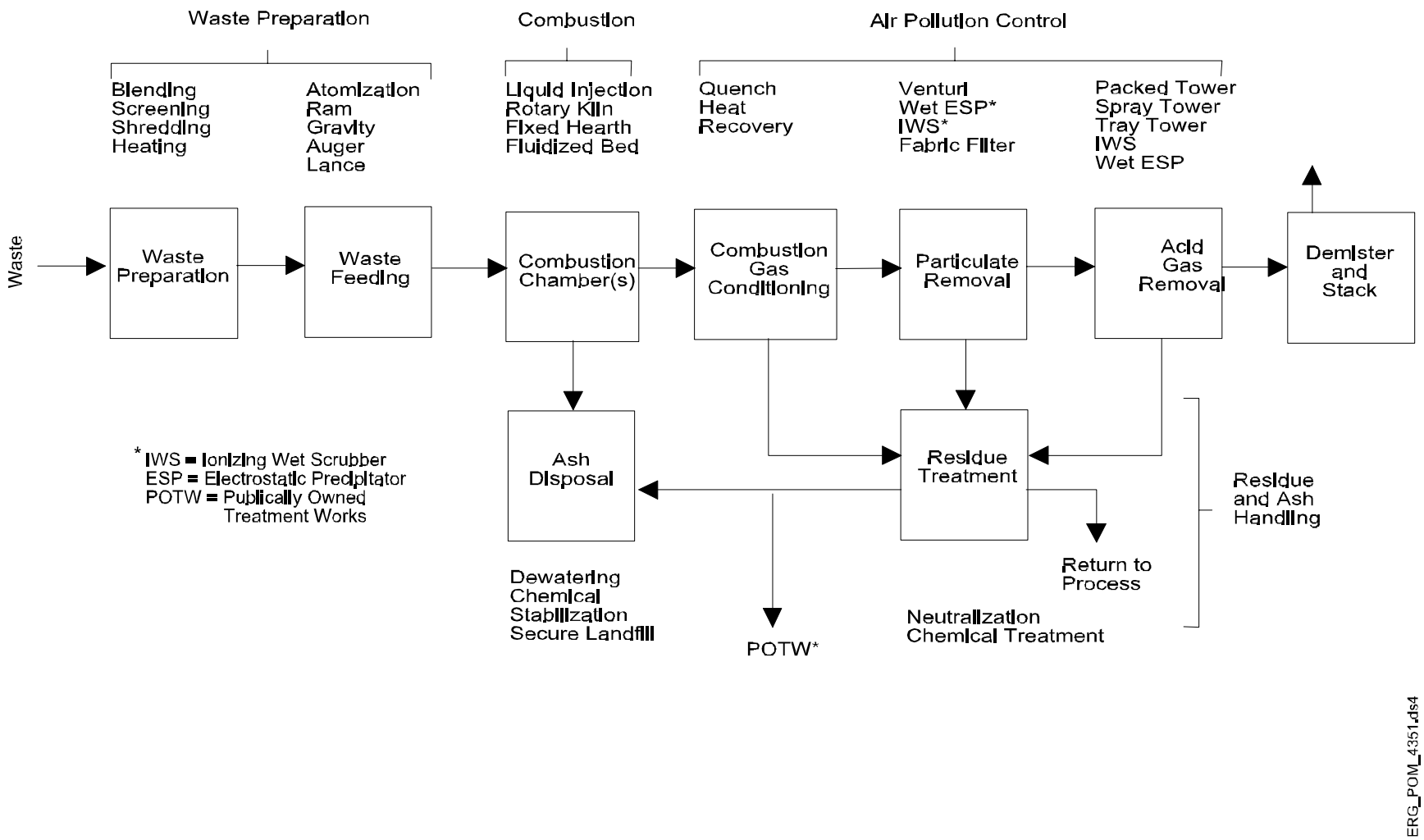

Figure 5-15. Typical Process Component Options in a Hazardous Waste Incineration Facility

Source: Reference 125.

Additionally, a few other technologies have been used for incineration of hazardous waste, including ocean incineration vessels and mobile incinerators. These processes are not in widespread use in the United States and are not discussed below.

Liquid Injection Incinerators

Liquid injection combustion chambers are used for pumpable liquid waste, including some low-viscosity sludges and slurries. Liquid injection units are usually simple, refractory-lined cylinders (either horizontally or vertically aligned) equipped with one or more waste burners. The typical capacity of liquid injection units is about 8 to 28 million Btu/hour (8.4 to 29.5 GJ/hour). Figure 5-16 presents a schematic diagram of a typical liquid injection unit.[125,129]

Rotary Kiln Incinerators

Rotary kiln incinerators are used for destruction of solid wastes, slurries, containerized waste, and liquids. Because of their versatility, these units are most frequently used by commercial off-site incineration facilities. Rotary kiln incinerators generally consist of two combustion chambers: a rotating kiln and an afterburner. The rotary kiln is a cylindrical refractory-lined shell mounted on a slight incline. The primary function of the kiln is to convert solid wastes to gases, which occurs through a series of volatilization, destructive distillation, and partial combustion reactions. The typical capacity of these units is about 10 to 60 million Btu/hour (10.5 to 63.3 GJ/hour).

Figure 5-17 presents a schematic diagram of a typical rotary kiln unit. An afterburner is connected directly to the discharge end of the kiln. The afterburner is used to ensure complete combustion of flue gases before their treatment for air pollutants. A tertiary combustion chamber may be added if needed. The afterburner itself may be horizontally or vertically aligned, and functions on much the same principles as the liquid injection unit described above. Both the afterburner and the kiln are usually equipped with an auxiliary fuel-firing system to control the operating temperature.

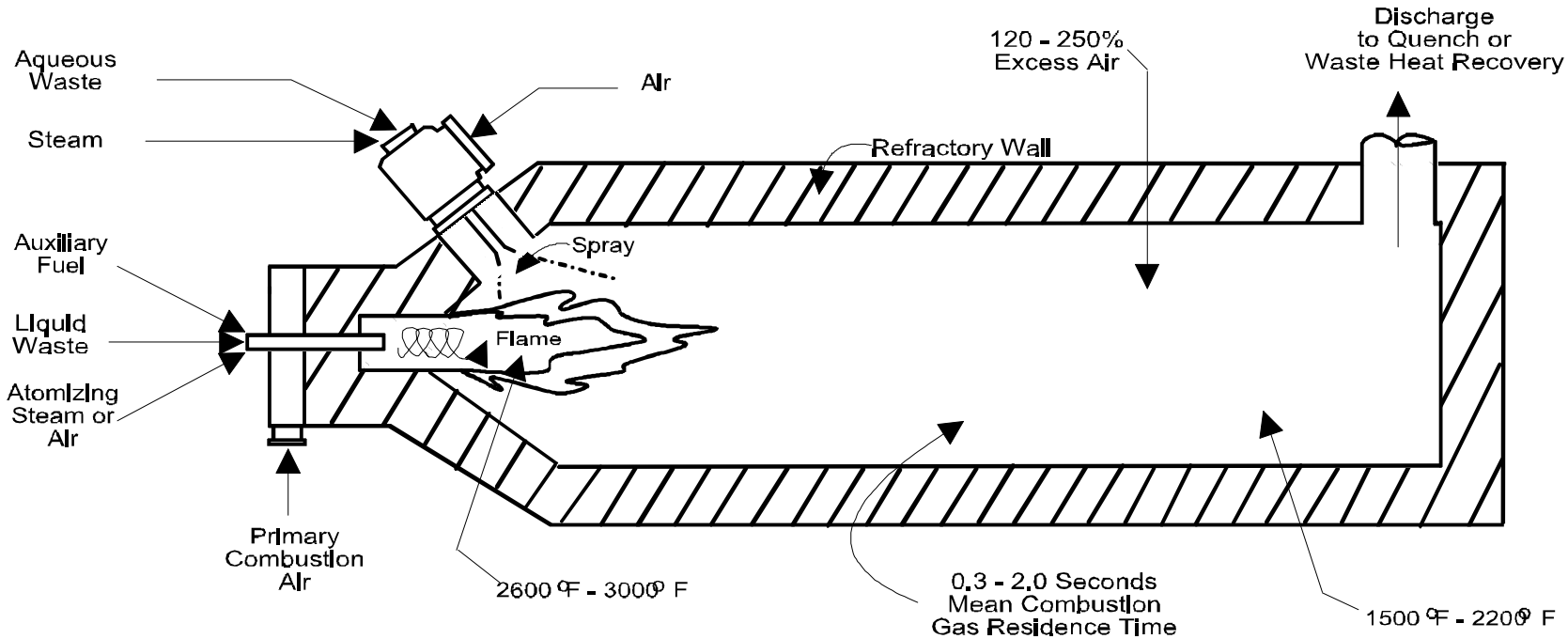

ERG_POM_4352.dsr

Figure 5-16. Typical Liquid Injection Combustion Chamber

Source: Reference 125.

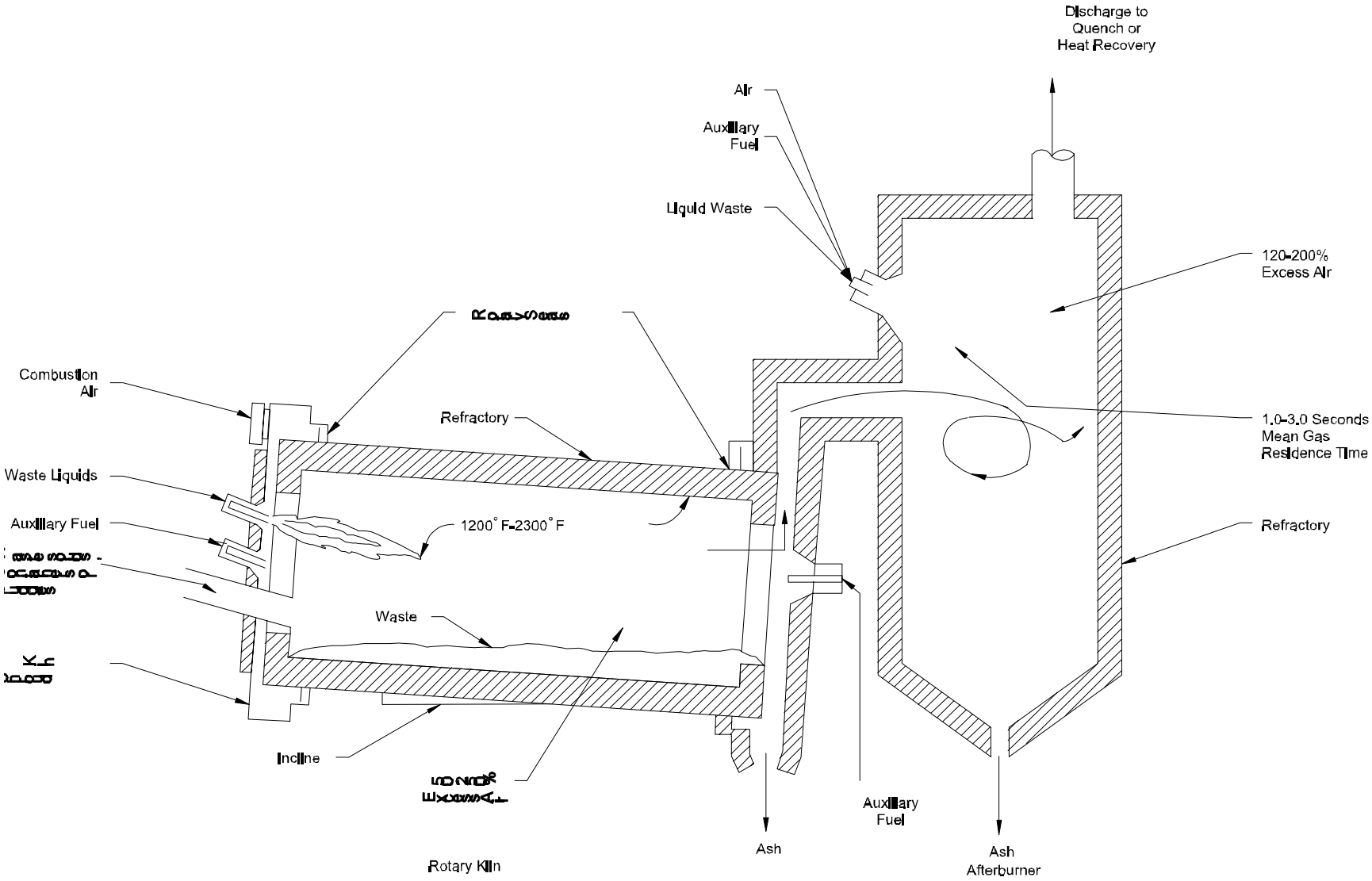

Figure 5-17. Typical Rotary Kiln/Afterburner Combustion Chamber

Source: Reference 125.

ERG_PB_517.ds4

Fixed-Hearth Incinerators

Fixed-hearth incinerators (also called controlled-air, starved-air, or pyrolytic incinerators) are the third major technology used for hazardous waste incineration. Figure 5-18 presents a schematic diagram of a typical fixed-hearth unit.[125,129] This type of incinerator may be used for the destruction of solid, sludge, and liquid wastes. Fixed-hearth units tend to be of smaller capacity (typically 5 million Btu/hour [5.3 GJ/hour]) than liquid injection or rotary kiln incinerators because of physical limitations in ram feeding and transporting large amounts of waste materials through the combustion chamber.

Fixed-hearth units consist of a two-stage combustion process similar to that of rotary kilns. Waste is ram-fed into the primary chamber and burned at about 50 to 80 percent of stoichiometric air requirements. This starved-air condition causes most of the volatile fraction to be destroyed pyrolitically. The resultant smoke and pyrolysis products pass to the secondary chamber, where additional air and, in some cases, supplemental fuel, is injected to complete the combustion.[125]

Fluidized-Bed Incinerators

Fluidized-bed incinerators (combustors), which were described in Section 5.5.2 of this report, have only recently been applied to hazardous waste incineration. FBCs used to dispose of hazardous waste are very similar to those used to incinerate sewage sludge except for their additional capability of handling liquid wastes.

FBCs are suitable for disposing of combustible solids, liquids, and gaseous wastes. They are not suited for irregular or bulky wastes, tarry solids, or other wastes that leave residues in the bed.[130] Fluidized-bed combustion chambers consist of a single refractory-lined combustion vessel partially filled with inert granular material (e.g., particles of sand, alumina, and sodium carbonate).[125] The typical capacity of this type of incinerator is 45 million Btu/hour (47.5 GJ/hour).

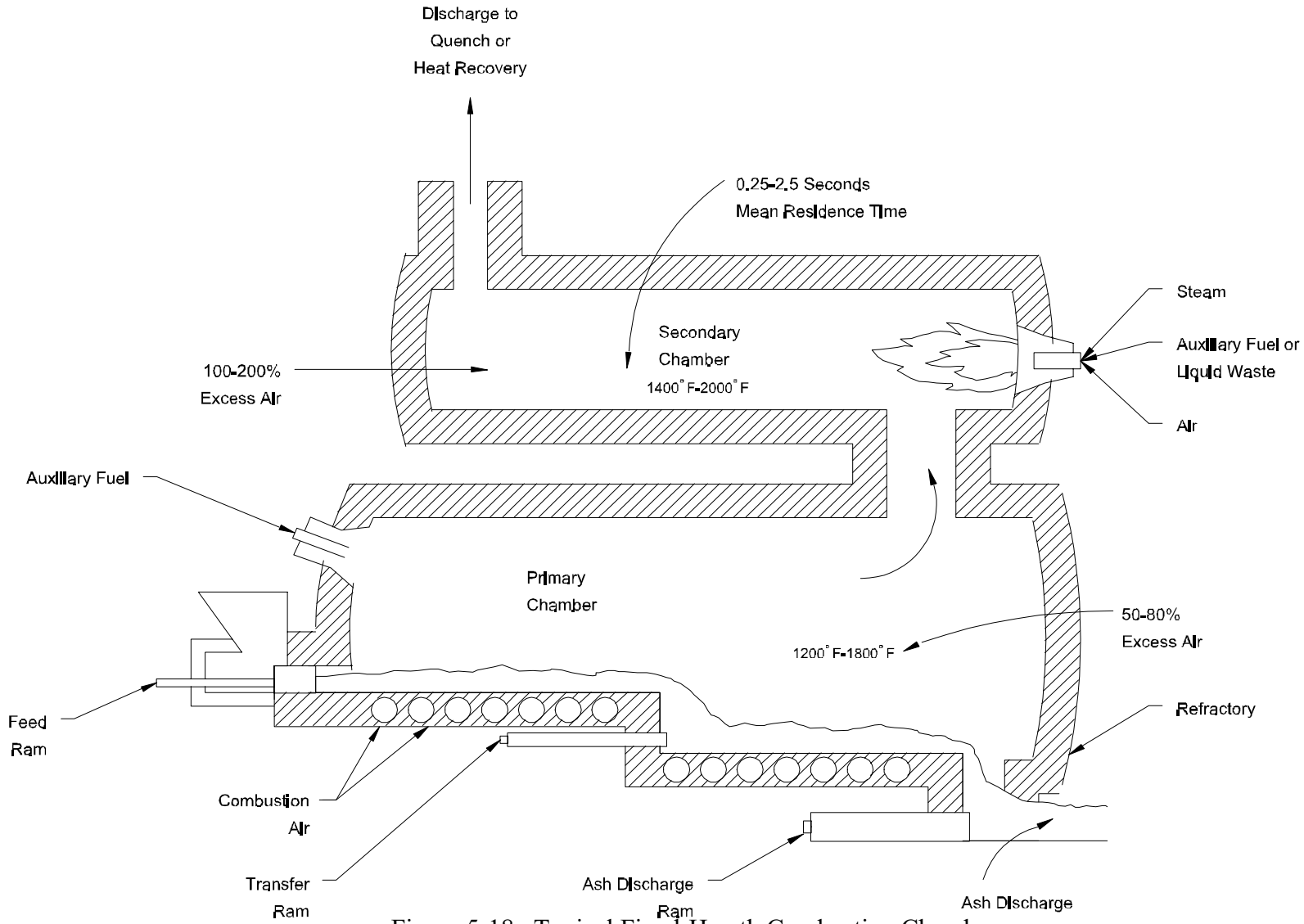

Figure 5-18. Typical Fixed-Hearth Combustion Chamber

ERG_PB_518.ds4

Source: Reference 125.

Fume Injection Incinerators

Fume injection incinerators are used exclusively to destroy gaseous or fume wastes. The combustion chamber is comparable to that of a liquid-injection incinerator (Figure 5-16) in that it usually has a single chamber, is vertically or horizontally aligned, and uses nozzles to inject the waste into the chamber for combustion. Waste gases are injected by pressure or atomization through the burner nozzles. Wastes may be combusted solely by thermal or catalytic oxidation.

Emission Control Techniques

The types of incinerators used for hazardous waste combustion are similar to the incinerators used by the other combustion sources discussed earlier in this section. However, the components in the hazardous waste stream vary extensively. The hazardous waste stream may include a variety of liquid, solid, or sludge wastes considered hazardous by RCRA. The hazardous waste stream may also include wastes generated by a variety of sources (e.g., medical, municipal, and sewage sludge).

Controlling lead emissions is partly accomplished by monitoring the temperature of the combustion bed and the feed chlorine content. Lead compounds vaporize at elevated temperatures. The higher the temperature, the larger the fraction of lead vaporized. As the temperature drops, a fraction of the lead condenses. Collection of lead condensed on PM occurs in the APCD. Controlling lead emissions is accomplished using the same type of PM control devices described in Section 5.3.

Chlorine content increases the sensitivity of lead emissions to bed temperature, causing the lead to volatilize at a lower temperature than if there were no chlorine present in the feed. This behavior is due to the high volatility of lead chlorides ($PbCl_2$) versus lead oxides (PbO). Monitoring and limiting the sludge chlorine content allows more lead to condense onto PM for more effective lead emissions control.[60] The PM is then easily captured by ESP or fabric filter control devices.

5.7.3 Emissions

The composition of the hazardous waste varies tremendously in the hazardous waste incineration industry, causing the lead content of the waste stream to vary widely. For example, burning lead-based paint may result in significant lead emissions, while burning halogenated solvents may result in no lead emissions. The lead content of the waste being combusted dictates whether or not significant lead emissions occur.

Because of limited data available on hazardous waste incineration emissions, no emission factors for lead are reported here. However, lead emissions are expected from this source because lead-containing components comprise part of the hazardous waste stream. The variability of the waste is too great to produce any factors that could represent an average incinerator scenario.

5.8 DRUM AND BARREL RECLAMATION

5.8.1 Source Location

Approximately 2,800,000 to 6,400,000 55-gallon drums are incinerated annually in the United States.[131] This estimate is based on the assumptions that there are 23 to 26 incinerators currently in operation, with each incinerator handling 500 to 1,000 drums per day, and operating 5 days a week with 14 days down time for maintenance. The exact locations of these incinerators could not be determined from the available data.

5.8.2 Process Description

Lead emissions have been detected in the stack gases from drum reclamation facilities.[132] These facilities typically consist of a furnace that is used to heat the drums to an elevated temperature in order to destroy any residual materials in the containers. The drums are then repaired, repainted, relined, and sold for reuse. The drums processed at these facilities come from a variety of sources, such as the petroleum and chemical industries.[133]

The furnaces are fired by an auxiliary fuel such as oil or natural gas. The used drums are typically loaded onto a conveyor, which carries them through the heat treatment zone. As the drums proceed through this process, any residual contents, paint, and interior linings are burned off or disintegrated. Lead formation can occur from either the heat treatment of the barrels or from the combustion of the auxiliary fuel.

5.8.3 Emissions

Only one test report was found that measured emissions of specific lead compounds from a drum reclamation facility.[132] The tested facility recycles 55-gallon drums. No information was available concerning the physical or chemical characteristics of the residual waste in the drums or of the auxiliary fuel type used to fire the furnace. The drum furnace consists of a boiler at 1400°F (760°C) and an afterburner at 1600°F (871°C) as an emissions control device. Table 5-24 shows the lead emission factor developed for this facility.

The emission factor for drum reclamation should be used cautiously because the nature of the residual waste product can vary greatly from facility to facility, which will likely affect lead emissions. The type of auxiliary fuel used can also have a significant effect on lead emissions from these facilities.

5.9 SCRAP TIRE INCINERATION

Most facilities that burn scrap tires use the tires to supplement a primary fuel, such as wood. This section addresses only those facilities that burn scrap tires as their sole fuel. The primary purpose of these facilities is to recover energy from the combustion of scrap tires.

5.9.1 Source Location

The EPA's Office of Solid Waste has estimated that approximately 26 million scrap tires were incinerated in the United States in 1990.[134] This equates to approximately

TABLE 5-24. LEAD EMISSION FACTORS FOR DRUM AND BARREL RECLAMATION SOURCES

SCC Number	Emission Source	Control Device	Average Emission Factor in lb/barrel (g/barrel)[a]	Emission Factor Range in lb/barrel (g/barrel)[a]	Emission Factor Rating
3-09-025-01	Drum Reclamation: Drum Burning Furnace	None	3.50×10^{-4} (1.59×10^{-1})	---	E

Source: Reference 132

[a]Emission factors are expressed in lb (g) of pollutant emitted per barrel of waste incinerated.

"---" means data are not available.

11 percent of the 242 million scrap tires generated in 1990. The use of scrap tires as fuel increased significantly during the late 1980s, and is expected to continue to increase.[134]

In December 1991, there were two operational, dedicated tire-to-energy facilities in the United States: the Modesto Energy Project in Westley, California, and the Exter Energy Company in Sterling, Connecticut. In 1993, the Erie Energy Project was built in Lackawanna, New York. The total capacity for all three plants combined could approach almost 25,000,000 tires per year (4,500,000 at the Modesto plant, and 10,000,000 each at the Exter and Erie plants).[135]

5.9.2 Process Description

The following process description is based on the operations at the Modesto Energy Facility in Westley, California. The Modesto facility consists of two whole-tire boilers that generate steam from the combustion of the scrap tires. Tires from a nearby supply pile are fed into a hopper located adjacent to the pile. Tires are then fed into the boilers at a rate of 350 to 400 tires per hour for each boiler. The boilers can accommodate tires as large as 4 feet in diameter made of rubber, fiberglass, polyester, and nylon.

The tires are burned on reciprocating stoker grates in the combustion chamber at the bottom of the boilers. The grate configuration allows air flow above and below the tires, which aids in complete combustion. The boilers are operated above 2,000°F (1,093°C) to ensure complete combustion of organic compounds emitted by the burning tires. The heat generated by the burning of the tires causes the water contained in the pipes of the refractory brickwork that lines the boiler to turn into steam. The high-pressure steam is then forced through a turbine for the generation of power. After exiting the boiler chamber, exhaust gases pass through the large fabric filter.

5.9.3 Emissions

Although no lead emission factors were identified specifically for scrap tire incinerators, this source category is included as a potential source of lead emissions. Lead emission factors for open burning of scrap tires are identified in Section 5.10, "Open Burning of Scrap Tires." The data presented in that section show that lead is a component of tires and, as a result, is emitted from the combustion of tires. It is expected that lead emissions are also present in emissions from incinerators that burn scrap tires. However, because of differences in the combustion and APCD design and operation, emission factors from open burning of scrap tires are not representative of scrap tire incinerators.

5.10 OPEN BURNING OF SCRAP TIRES

5.10.1 Source Location

Open burning of scrap tires can occur at permitted landfills that stockpile scrap tires, at closed landfills that already contain scrap tires, and at illegal dumpsites where tires are discarded. The fires can start by accident or are intentionally set by arsonists, and thus are often unpredictable as to where and when they will occur.

5.10.2 Process Description

Approximately 240 million vehicle tires are discarded annually.[136] Although viable methods for recycling exist, less than 25 percent of discarded tires are recycled; the remaining 175 million are discarded in landfills, stockpiles, or illegal dumps.[136] Although it is illegal in many States to dispose of tires by open burning, fires often occur at tire stockpiles and through illegal burning activities. These fires generate a huge amount of heat and are difficult to extinguish (some tire fires continue for months). Lead is a component of tires and is emitted from the combustion of these tires.

5.10.3 Emissions

Table 5-25 contains emission factors for the open burning of tires.[137] The average emission factor presented represents the average of tests performed on the simulated open burning of chunk (defined as one-quarter or one-sixth of an entire tire) and shredded tires. When estimating emissions from an accidental tire fire, note that emissions from burning tires are generally dependent on the burn rate of the tire.

5.11 CREMATORIES

5.11.1 Source Location

In 1991, there were about 400,000 cremations in more than 1,000 crematories located throughout the United States. Table 5-26 lists the number of crematories located in each State and the estimated number of cremations performed in each State.[138]

5.11.2 Process Description

Crematory incinerators used for human cremation at funeral homes, mortuaries, cemeteries, and crematories are normally of an excess air design. They utilize secondary chamber (afterburner) and primary chamber (ignition) burners fueled by liquified petroleum (LP) gas or natural gas. Burner capacities are generally between 750,000 and 1,500,000 BTUs per hour per burner. Late model units have burner modulation capability to regulate chamber temperatures and conserve fuel. Incineration rates range from 100 to 250 pounds of remains per hour.

Preheating and a minimum secondary chamber temperature, typically ranging from 1,400°F to 1,800°F, may be requirements. Although not suitable for this batch load type of incinerator, the same requirements are occasionally applied to the primary chamber.

TABLE 5-25. LEAD EMISSION FACTORS FOR OPEN BURNING OF SCRAP TIRES

SCC Number	Emission Source	Control Device	Average Emission Factor in lb/ton (kg/Mg)[a]	Emission Factor Range in lb/ton (kg/Mg)[a]	Emission Factor Rating
5-03-002-03	Open Burning of Shredded Automobile Tires	None	2.00×10^{-4} (1.00×10^{-4})	---	C
	Burning of Chunk Automobile Tires	None	6.70×10^{-4} (3.35×10^{-4})	---	C

Source: Reference 137

[a] Emission factors are expressed in lb (kg) of pollutant emitted per ton (Mg) of waste incinerated.

"---" means data are not available.

TABLE 5-26. 1991 U.S. CREMATORY LOCATIONS BY STATE

State	No. of Crematories	No. of Cremations	State	No. of Crematories	No. of Cremations
Alabama	6	1,313	Montana	15	3,234
Alaska	6	860	Nebraska	7	1,710
Arizona	31	13,122	Nevada	12	6,343
Arkansas	13	2,435	New Hampshire	6	2,348
California	142	89,233	New Jersey	16	16,557
Colorado	27	9,537	New Mexico	10	3,140
Connecticut	10	5,528	New York	38	24,625
Delaware	4	1,062	North Carolina	27	6,884
District of Columbia	0	NA	North Dakota	1	NA
Florida	97	59,213	Ohio	42	16,109
Georgia	15	4,786	Oklahoma	10	2,120
Hawaii	8	3,937	Oregon	36	11,272
Idaho	13	2,637	Pennsylvania	46	16,867
Illinois	47	17,557	Rhode Island	5	2,446
Indiana	25	4,743	South Carolina	12	2,422
Iowa	14	3,042	South Dakota	3	NA
Kansas	10	2,029	Tennessee	9	2,451
Kentucky	6	1,548	Texas	39	13,795
Louisiana	5	2,466	Utah	6	1,210
Maine	4	3,469	Vermont	5	1,902
Maryland	18	6,300	Virginia	26	7,738
Massachusetts	13	10,611	Washington	49	18,466
Michigan	40	17,460	West Virginia	6	762
Minnesota	20	7,296	Wisconsin	28	7,293
Mississippi	4	693	Wyoming	3	NA
Missouri	23	6,105			

Source: Reference 138
NA = not available.

The human remains and cremation container, generally made of cardboard or wood, are loaded onto the primary chamber hearth and the primary burner is ignited to begin the cremation process. The remains may be raked at the midpoint of the cremation to uncover unburned material and speed the process. The average cremation takes from 1 1/2 to 3 hours, after which the incinerator is allowed to cool for a period of at least 30 minutes so that the remains can be swept from the hearth.[139]

5.11.3 Emissions

Evaluation tests on two propane-fired crematories at a cemetery in California were conducted through a cooperative effort with the Sacramento Metropolitan Air Quality Management District to determine HAP emissions from a crematory.[140] The units were calibrated to operate at a maximum of 1.45 MMBtu per hour. Emissions testing was performed over a two-week period. Thirty-six bodies were cremated during the test period. The body, cardboard, and wood process rates for each test were reported.

Sampling, recovery, and analysis for lead were performed in accordance with CARB Method 436. Emission factors developed from these data are presented in Table 5-27.

5.12 PULP AND PAPER INDUSTRY

Chemical wood pulping involves the extraction of cellulose from wood by dissolving the lignin that binds the cellulose fibers. Kraft pulping is the major form of chemical wood pulping in the United States, accounting for approximately 85 percent of pulp production[141] and is expected to continue as the dominant pulping process.[142,143] Semi-chemical and acid sulfite pulping constitute 6 and 4 percent of domestic pulp production, respectively.[141]

Four processes associated with the pulp and paper industry have been identified as potential sources of lead emissions: chemical-recovery furnaces, smelt-dissolving tanks, lime kilns, and power boilers. The following sections focus on the pulp mill thermal chemical-recovery processes associated with potential lead emissions. Lead emissions from wood waste

TABLE 5-27. LEAD EMISSION FACTOR FOR CREMATORIES

SCC Number	Emission Source	Control Device	Average Emission Factor in lb/body (kg/body)[a]	Emission Factor Rating
3-15-021-01	Crematory Stack	None	6.62×10^{-5} (3.01×10^{-5})	U

Source: Reference 140

Note: Average weight per body incinerated: body = 141 lb (64 kg); wrapping material = 4 lb (2 kg) cardboard, 3 lb (1.4 kg) wood.

[a] Emission factors are in lb (kg) per body.

and fossil fuel-fired industrial power boilers are not specific to the pulp and paper industry; see Section 5.1.

5.12.1 Kraft Recovery Furnaces and Smelt-Dissolving Tanks

Source Location

The distribution of kraft pulp mills in the United States in 1997 is shown in Table 5-28. Kraft pulp mills are located primarily in the southeast, whose forests provide over 60 percent of U.S. pulpwood.

Process Description

The kraft pulping process involves the cooking or digesting of wood chips at an elevated temperature (340 to 360°F [about 175°C]) and pressure (100 to 135 psig) in white liquor, which is a water solution of sodium sulfide (Na_2S) and sodium hydroxide (NaOH). The lignin that binds the cellulose fibers is chemically dissolved by the white liquor in a tall, vertical digester. This process breaks the wood into soluble lignin and alkali-soluble hemicellulose and insoluble cellulose or pulp. A typical kraft pulping and recovery process is shown in Figure 5-19.

Two types of digester systems are used in chemical pulping: batch and continuous. In a batch digester, the contents of the digester are transferred to an atmospheric tank (usually referred to as a blow tank) after cooking is completed (2 to 6 hours). In a continuous digester, wood chips and white liquor continuously enter the system from the top while pulp is continuously withdrawn from the bottom into a blow tank. In both types of digesters, the entire contents of the blow tank are diluted and pumped to a series of brownstock washers, where the spent cooking liquor is separated from the pulp. The pulp, which may then be bleached, is pressed and dried into the finished product.

TABLE 5-28. DISTRIBUTION OF KRAFT PULP MILLS IN THE UNITED STATES (1997)

State	Number of Mills
Alabama	14
Arizona	1
Arkansas	7
California	2
Florida	7
Georgia	12
Idaho	1
Kentucky	2
Louisiana	10
Maine	7
Maryland	1
Michigan	3
Minnesota	2
Mississippi	6
Montana	1
New Hampshire	1
New York	1
North Carolina	6
Ohio	1
Oklahoma	1
Oregon	7
Pennsylvania	3
South Carolina	6
Tennessee	2
Texas	6
Virginia	4
Washington	6
Wisconsin	4
Total	124

Source: Reference 144

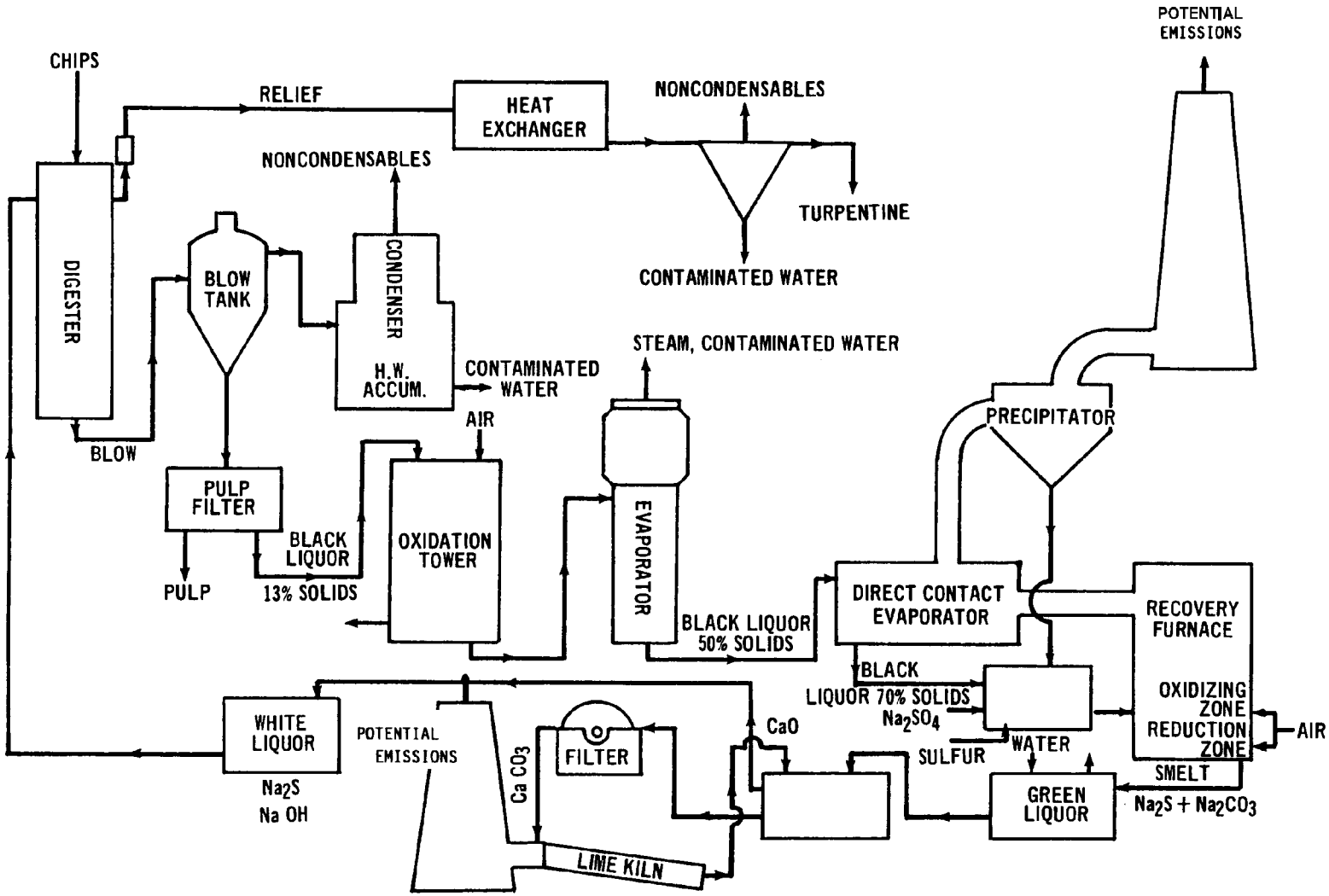

Figure 5-19. Typical Kraft Pulping and Recovery Process

Source: Reference 145.

POM_9411.ds4

The balance of the kraft process is designed to recover the cooking chemicals and heat. The diluted spent cooking liquor, or weak black liquor, which is 12 to 18 percent dissolved solids, is extracted from the brownstock washers and concentrated in a multiple-effect evaporator system to about 55 percent solids. The liquor is then further concentrated to 65 percent solids (strong black liquor) in a direct contact evaporator (DCE) or a nondirect contact evaporator (NDCE), depending on the configuration of the recovery furnace in which the liquor is combusted. DCE and NDCE recovery furnace schematics are shown in Figures 5-20 and 5-21, respectively.

In older recovery furnaces, the furnace's hot combustion gases concentrate the black liquor in a DCE prior to combustion. NDCEs include most furnaces built since the early 1970s and modified older furnaces that have incorporated recovery systems that eliminate conventional DCEs. These NDCEs use a concentrator rather than a DCE to concentrate the black liquor prior to combustion. In another type of NDCE system, the multiple-effect evaporator system is extended to replace the direct contact system.

The strong black liquor is sprayed into a recovery furnace with air control to create both reducing and oxidizing zones within the furnace chamber. The combustion of the organics dissolved in the black liquor provides heat for generating process steam and, more importantly, for reducing sodium sulfate (Na_2SO_4) to Na_2S to be reused in the cooking process. Na_2SO_4, which constitutes the bulk of the particulates in the furnace flue gas, is recovered and recycled by an ESP. After combustion, most of the inorganic chemicals present in the black liquor collect as a molten smelt (containing sodium carbonate [Na_2CO_3] and Na_2S) at the bottom of the furnace, where they are continuously withdrawn into a smelt-dissolving tank. Molten smelt in the smelt-dissolving tank is contacted with mill water or weak wash (the filtrate from lime mud washing) to form green liquor.

In addition to straight kraft process liquor, semi-chemical pulping process spent liquor, known as brown liquor, may also be recovered in kraft recovery furnaces. The semi-chemical pulping process is a combination of chemical and mechanical pulping processes

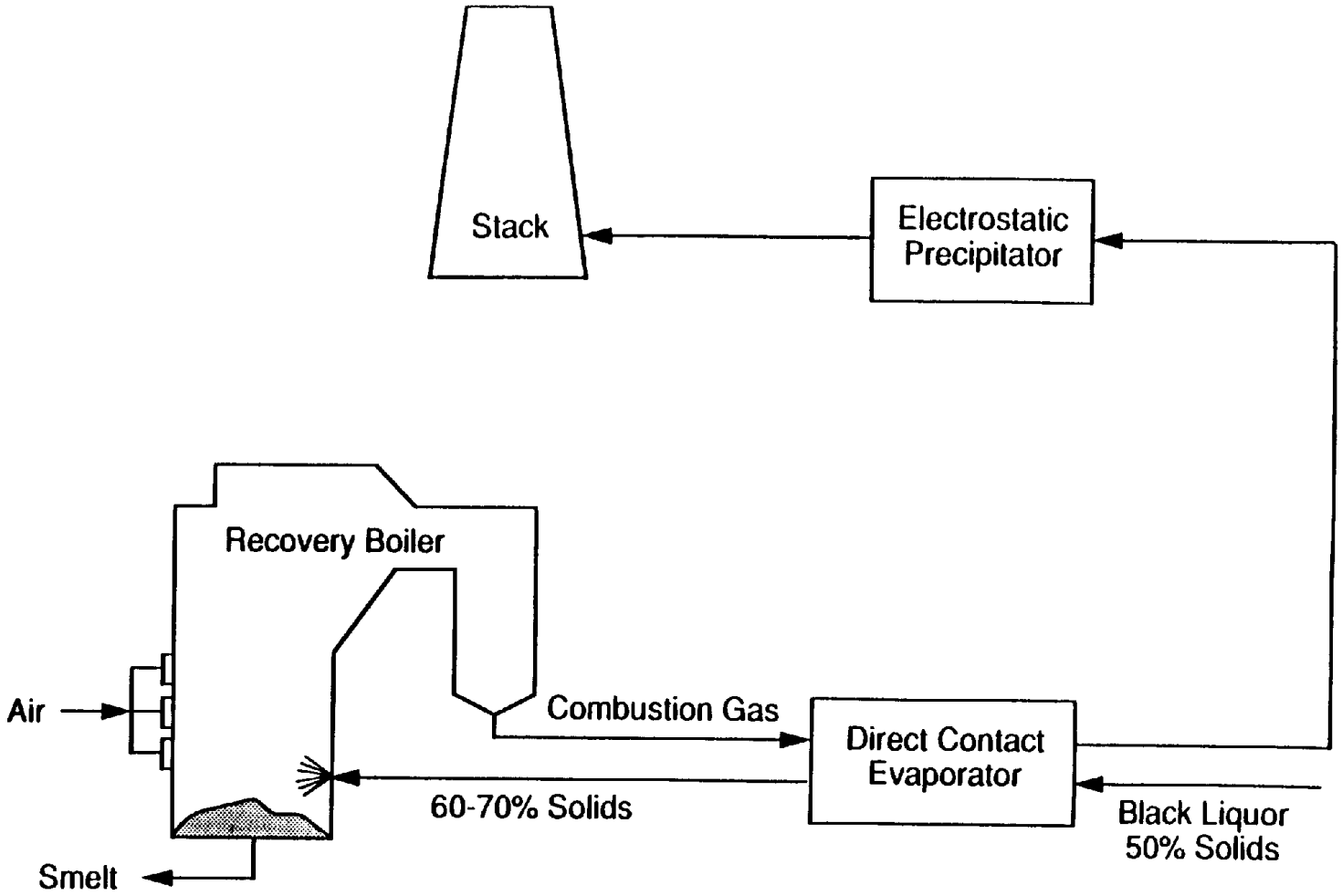

Figure 5-20. Direct Contact Evaporator Recovery Boiler

Source: Reference 146.

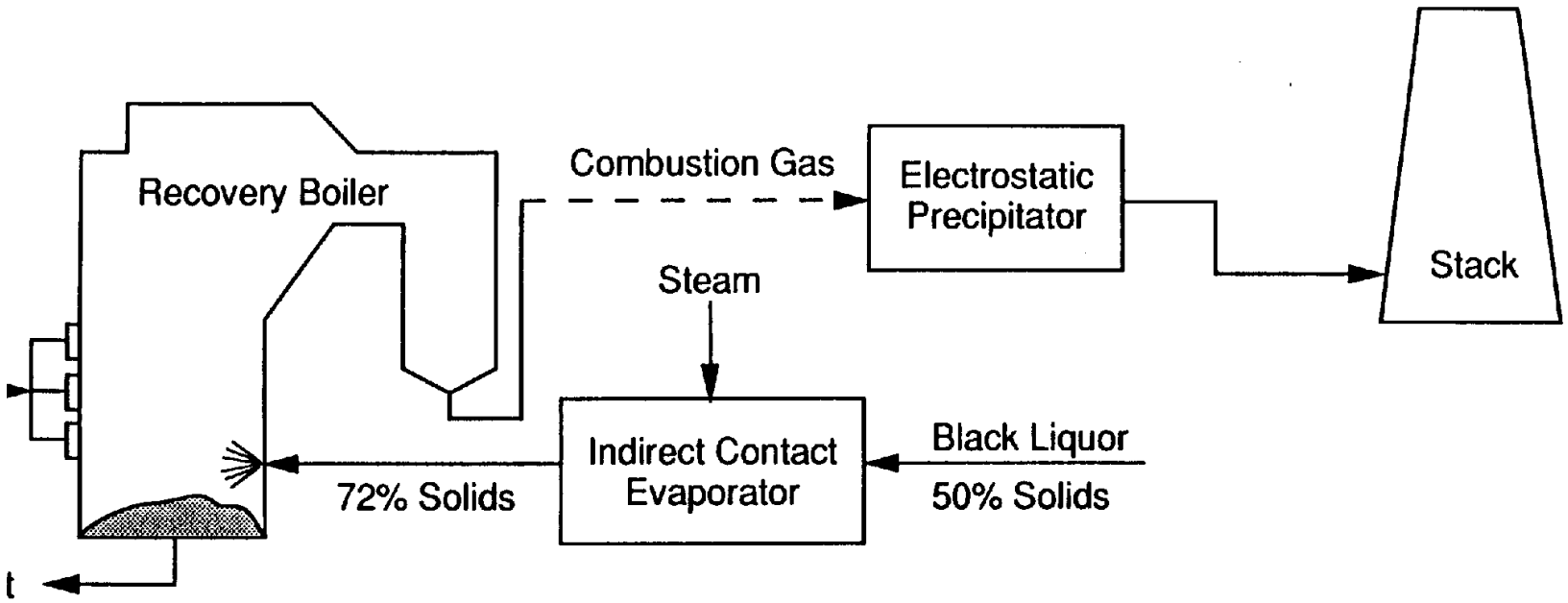

Figure 5-21. Non-direct Contact Evaporator Recovery Boiler

Source: Reference 146.

that was developed to produce high-yield chemical pulps. In the semi-chemical process, wood chips are partially digested with cooking chemicals to weaken the bonds between the lignin and the wood. Oversize particles are removed from the softened wood chips and the chips are mechanically reduced to pulp by grinding them in a refiner. The most common type of semi-chemical pulping is referred to as neutral sulfite semi-chemical (NSSC). The major difference between the semi-chemical process and the kraft/sulfite pulping process is that the semi-chemical digestion process is shorter and wood chips are only partially delignified. Some semi-chemical pulp mills are, as of 1997, using chemical recovery.[144] Also, as mentioned above, some mills combine spent liquor from the on-site semi-chemical process with spent liquor from the adjacent kraft process for chemical recovery.[141]

Particulate emissions from the kraft recovery furnaces consist primarily of Na_2SO_4 and Na_2CO_3, with some sodium chloride. Particulate emissions also contain lead, but only in minute quantities because lead is found as a contaminant in process chemicals and in trace amounts in wood. Particulate control and, therefore, lead control on recovery furnaces is achieved with ESPs, including both wet- and dry-bottom and, to a lesser extent, with scrubbers. Further particulate control is necessary for DCEs equipped with either a cyclonic scrubber or a cascade evaporator because these devices are generally only 20 to 50 percent efficient for particulates.[145] Most often in these cases, an ESP is employed after the DCE for an overall particulate control efficiency range of 85 percent to more than 99 percent. At existing mills, auxiliary scrubbers may be added to supplement older and less efficient primary particulate control devices. No specific data were available in the literature documenting lead control efficiencies for ESPs and scrubbers on kraft black liquor recovery furnaces.

Emissions

Emission factors for lead from kraft recovery furnaces were developed from data provided by the National Council for Air and Stream Improvement, an industry environmental research organization.[147,148] Kraft furnace/control configurations represented included a DCE recovery furnace equipped with an ESP and scrubber in series, a DCE recovery furnace equipped

with only an ESP, an NDCE recovery furnace equipped with an ESP and scrubber in series, and an NDCE recovery furnace equipped with only an ESP. Emissions data were also provided for smelt-dissolving tanks (3). Lead emission factors for kraft black liquor recovery furnaces and smelt-dissolving tanks are presented in Table 5-29.

5.12.2 Lime Kilns

Source Location

Lime kilns are located at kraft process pulp mills. (See Table 5-28 for kraft pulp mill source locations reported in 1993.)

Process Description

In the kraft process, green liquor from the smelt-dissolving tanks is clarified and reacted with burnt lime (CaO) in a lime slaker. Following a series of causticizing vessels, the resultant white liquor is clarified to yield Na_2S + NaOH (aqueous white liquor) and lime mud or calcium carbonate ($CaCO_3$). The white liquor is recycled to the digestion process and the lime mud is calcined in a lime kiln to regenerate CaO.[146]

A lime kiln is a counter current, inclined tube process heater designed to convert lime mud ($CaCO_3$) to CaO for reuse in the causticizing of kraft liquor. A process flow diagram for a lime kiln is shown in Figure 5-22. The rotary kiln is the most common lime kiln design used in the kraft pulp and paper industry. Rotary lime kilns range from 8 to 13 ft (2.4 to 4.0 m) in diameter, and from 100 to 400 ft (30 to 120 m) in length. Lime kilns predominantly fire natural gas, with some units firing distillate and/or residual fuel oil. Many facilities incinerate non-condensible gases (NCG) from pulping source vents in lime kilns to control total reduced sulfur (TRS) emissions. Temperatures in the kiln can range from 300 to 500°F (150 to 260°C) at the upper or wet end to 2200 to 2400°F (1200 to 1300°C) at the hottest part of the calcination zone near the lower or dry end.[146,149]

TABLE 5-29. LEAD EMISSION FACTORS FOR KRAFT PROCESS RECOVERY FURNACES AND SMELT DISSOLVING TANKS

SCC Number	Emission Source	Control Device	Average Emission Factor in lb/10^6 ton (kg/10^6 Mg)[a]	Emission Factor Range in lb/10^6 ton (kg/10^6 Mg)[a]	Emission Factor Rating
3-07-001-04	Direct Contact Evaporator Kraft Recovery Furnace	ESP, ESP/Wet Scrubber	9.5×10^1 (4.8×10^1)	---	D
3-07-001-10	Nondirect Contact Evaporator Kraft Recovery Furnace	ESP, ESP/Wet Scrubber	1.2×10^2 (5.9×10^1)	---	D
3-07-001-05	Smelt Dissolving Tank	Demister, Venturi Scrubber	2.3×10^1 (1.2×10^1)	---	D

Source: Reference 147,148

[a]Emission factors are in lb (kg) of pollutant emitted per million tons (Mg) of black liquor solids (BLS) processed.

"---" means data are not available.

ESP = Electrostatic Precipitator.

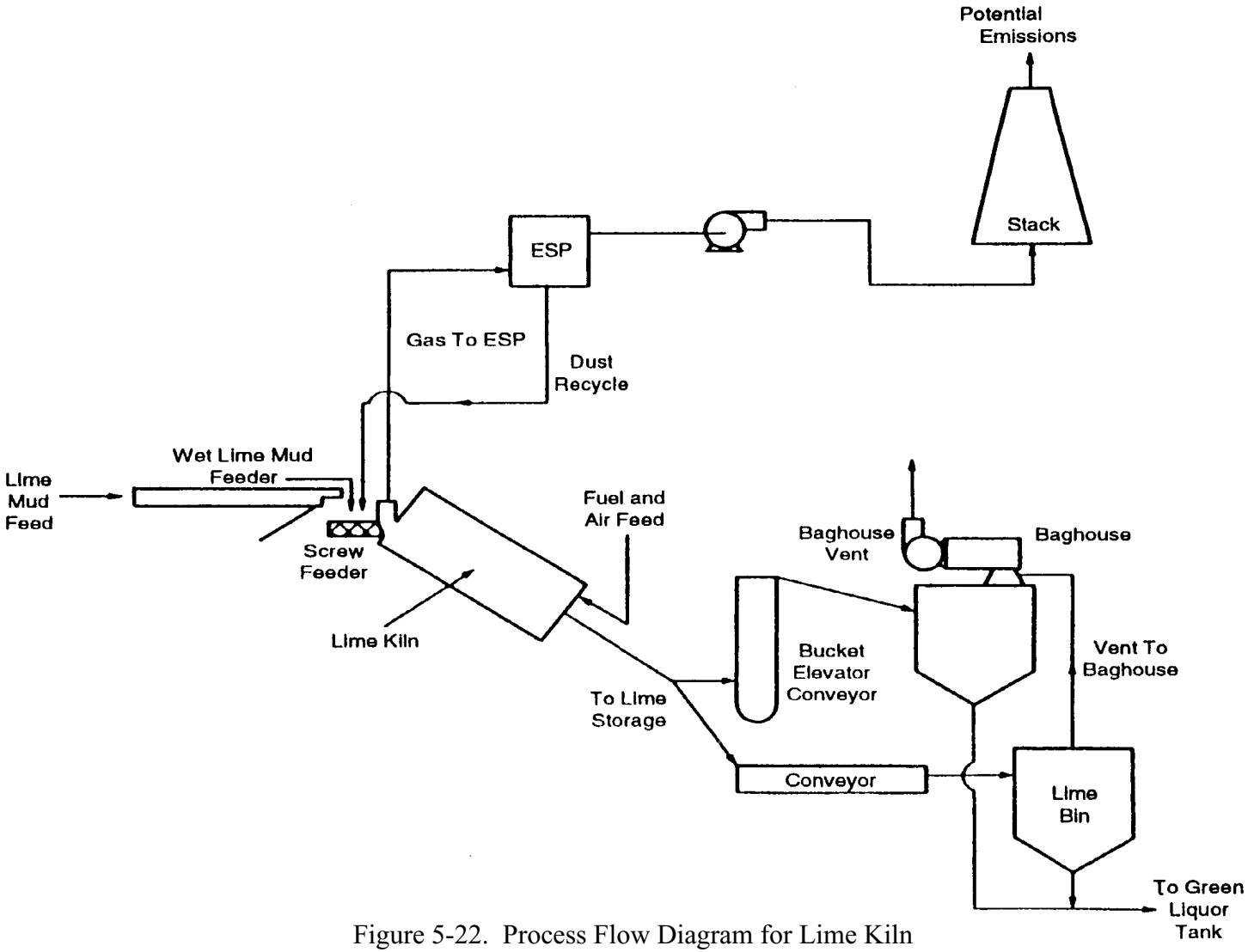

Figure 5-22. Process Flow Diagram for Lime Kiln

Source: Reference 146.

Emissions of concern from lime kilns include PM, largely in the form of calcium salts; some of the PM also contains lead. Emissions of lead from lime kilns are likely due to the lead content of the lime mud with some contribution from the combustion of fossil fuel (natural gas or fuel oil). The most common PM control technologies used on lime kilns are scrubbers (some ESPs are also used). Scrubbers on lime kilns use either fresh water or clean condensates from pulping sources as a scrubbing medium. Small amounts of caustic solution may be added to the scrubbing solution to scrub TRS & SO_2. Lime kiln scrubber designs include impingement, venturi, and cyclonic scrubbers.[150]

Emissions

Lead emission factors for uncontrolled and scrubber-controlled lime kilns are presented in Table 5-30.

5.12.3 Sulfite Recovery Furnaces

Source Location

Sulfite recovery furnaces are located at sulfite process pulp mills. Table 5-31 shows the distribution of sulfite pulp mills in the United States in 1997 according to information compiled in support of EPA's pulp and paper industry MACT standard development.

Process Description

Although not as commonplace, the acid sulfite pulp production process is similar to the kraft process except that different chemicals are used for cooking. Sulfurous acid is used in place of a caustic solution to dissolve wood lignin. To buffer the cooking solution, a bisulfite of sodium, magnesium, calcium, or ammonium is used. Digestion occurs under high temperature and pressure, as in the kraft process, in either batch mode or continuous digesters. Following digestion and discharge of the pulp into an atmospheric blow pit or dump tank, the spent sulfite

TABLE 5-30. LEAD EMISSION FACTORS FOR LIME KILNS

SCC Number	Emission Source	Control Device	Average Emission Factor in lb/ton (kg/Mg)	Emission Factor Range in lb/ton (kg/Mg)	Emission Factor Rating	Reference
3-07-001-06	Lime Kiln	None	1.09×10^{-4} (5.44×10^{-5})[a]	1.86×10^{-5} - 1.21×10^{-4}	U	151
		Scrubber	1.41×10^{4} (7.07×10^{3})[b]	---	D	147,148

[a] Emission factors in lb (kg) per air dry ton (Mg) of pulp produced.
[b] Emission factors in lb (kg) per million tons (Mg) of calcium oxide (lime) produced.

"---" means data are not available.

TABLE 5-31. DISTRIBUTION OF SULFITE PULP MILLS IN THE UNITED STATES (1997)

State	Number of Mills
Alaska	1
Florida	1
Maine	1
New York	1
Pennsylvania	1
Washington	5
Wisconsin	4
Total	14

Source: Reference 144

liquor, known as red liquor, may be treated and discarded, incinerated, or sent through a recovery process for recovery of heat and chemicals. Additionally, chemicals can be recovered from gaseous streams such as those from red stock washers. The cost of the soluble bases, with the exception of calcium, makes chemical recovery economically feasible.[141,145] A simplified process schematic of magnesium-based sulfite pulping and chemical recovery is shown in Figure 5-23.

Chemical recovery in the sulfite process involves the concentration of weak red liquor in multiple effect evaporators and DCEs to strong red liquor (55 to 60 percent solids). This liquor is sprayed into a furnace and burned, producing steam for mill processes. When magnesium-base liquor is burned, magnesium oxide is recovered from the flue gas in a multicyclone. The collected magnesium oxide is then water-slaked and used as circulation liquor in a series of venturi scrubbers designed to absorb SO_2 from the flue gas to form bisulfite solution for use in the cook cycle.

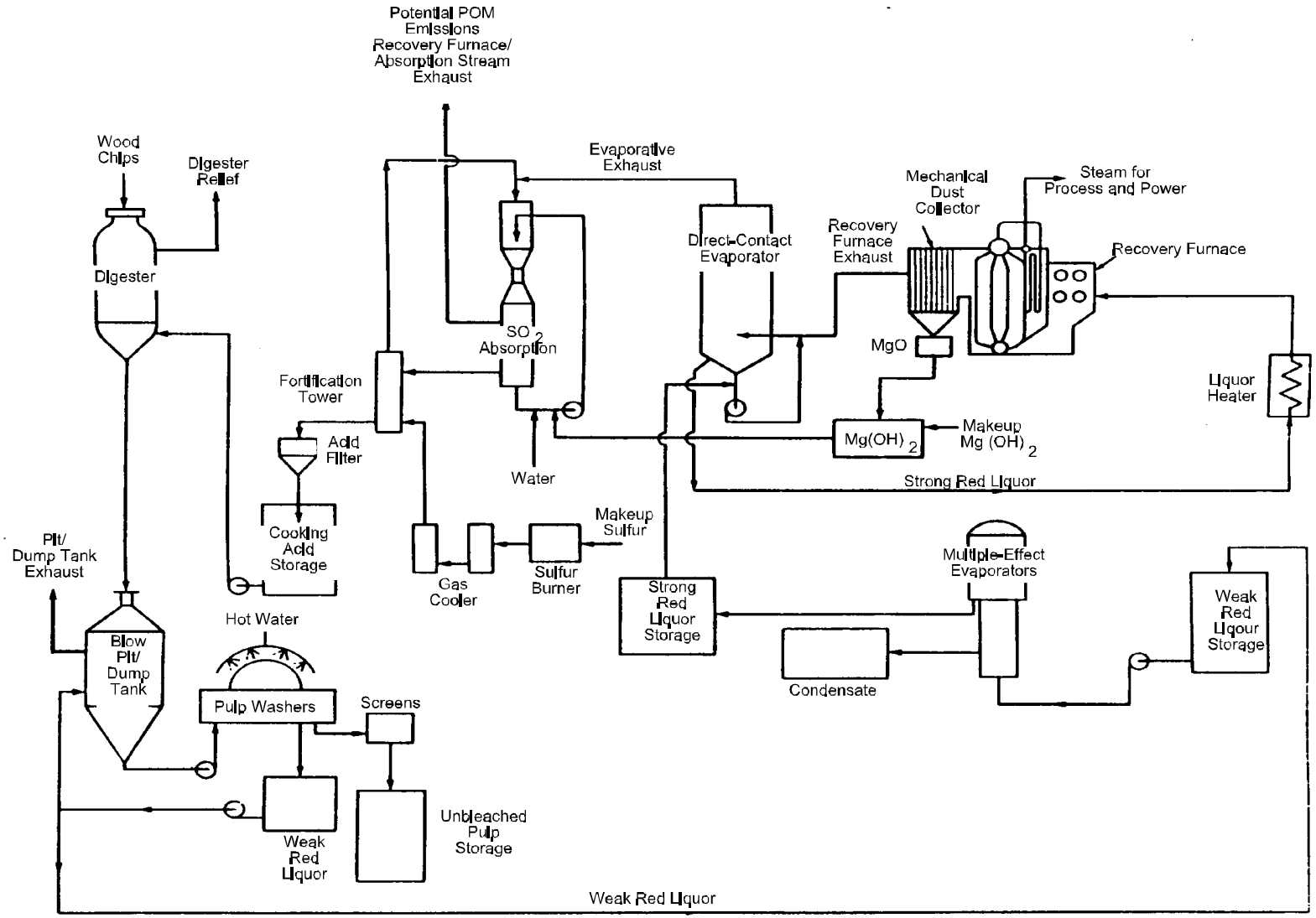

Figure 5-23. Process Diagram for Magnesium-Based Sulfite Pulping and Chemical Recovery

Source: Reference 145.

Several processes for chemical recovery from sodium-base liquor are based upon the combustion of concentrated liquor in a kraft-type recovery furnace. The resultant smelt is similar in composition to that produced by combustion of kraft liquor. The commercial approaches to convert sodium-base smelt chemicals into regenerated cooking liquor include Sivola-Lurgi, Tampella, Storm, Mead, and Rayonier.[152] Sulfite mills that do not practice chemical recovery require an acid plant to fulfill total sulfite demand. This is accomplished by rotary or spray sulfur burners equipped with heat exchangers and SO_2-absorbing scrubbers.

Emissions

As with the kraft process, lead exists only as a contaminant in process chemicals and in trace amounts in wood and is, therefore, found in minute quantities. Only one emission factor was available in the literature for lead from an uncontrolled sulfite recovery furnace. The lead emission factor is presented in Table 5-32.

5.13 PORTLAND CEMENT MANUFACTURING

Two processes, the wet and dry processes, can be used to manufacture Portland cement. Based on 1990 U.S. cement kiln capacity data, an estimated 68 percent of Portland cement is manufactured using the dry process. A description of the wet and dry processes and the emissions resulting from the various operations is presented below.

5.13.1 Source Location

In 1990, there were a total of 212 U.S. cement kilns with a combined total clinker capacity of 81.1×10^6 tons (73.5×10^6 Mg). Of this total, 11 kilns with a combined capacity of 2.0×10^6 tons (1.8×10^6 Mg) were inactive. More than 30 raw materials are used to manufacture Portland cement. These materials can be classified into four basic classes of raw materials: calcarious, siliceous, argillaceous, and ferriferous. The 201 active kilns had a clinker capacity of

TABLE 5-32. LEAD EMISSION FACTORS FOR SULFITE PROCESS RECOVERY FURNACES

SCC Number	Emission Source	Control Device	Average Emission Factor in lb/10^6 ton (kg/10^6 Mg)[a]	Emission Factor Range in lb/10^6 ton (kg/10^6 Mg)[a]	Emission Factor Rating
3-07-002-22	Sulfite Recovery Furnace	None	1.70×10^1 (8.5)	---	D

Source: Reference 147,148

[a]Emission factors in lb (kg) per million tons (Mg) of red liquor solids (RLS) processed.

"---" means data are not available.

79.1×10^6 tons (71.8×10^6 Mg). The name, location, and clinker capacity of each kiln is presented in Table 5-33.

5.13.2 Process Description

Figure 5-24 presents a basic flow diagram of the Portland cement manufacturing process. The process can be divided into four major steps: raw material acquisition and handling, kiln feed preparation, pyroprocessing, and finished cement grinding.

The initial step in the production of Portland cement manufacturing is raw materials acquisition. Calcium, which is the element of highest concentration in Portland cement, is obtained from a variety of calcareous raw materials, including limestone, chalk, marl, sea shells, aragonite, and an impure limestone known as "natural cement rock." The other raw materials--silicon, aluminum, and iron--are obtained from ores and minerals such as sand, shale, clay, and iron ore. Lead is expected to be present in the ores and minerals extracted from the earth. The only potential source of lead emissions from raw material acquisition would be due to wind-blown particulate-containing lead from the quarry operations. Lead emissions are expected to be negligible from these initial steps in Portland cement production.

The second step involves preparation of the raw materials for pyroprocessing (thermal treatment). Raw material preparation includes a variety of blending and sizing operations designed to provide a feed with appropriate chemical and physical properties. The raw material processing differs for wet processes and dry processes. At facilities where the dry process is used, the moisture content in the raw material, which can range from less than 1 percent to greater than 50 percent, is reduced to less than 1 percent. Lead emissions can occur during this drying process, but are anticipated to be very low because the drying temperature is much below the boiling point of lead. At some facilities, heat for drying is provided by the exhaust gases from the pyroprocessor. At facilities where the wet process is used, water is added to the raw material during the grinding step, thereby producing a pumpable slurry containing approximately 65 percent solids.

TABLE 5-33. PORTLAND CEMENT PRODUCTION FACILITIES

Company and location	No./type of kiln	Clinker capacity[a] 10^3 Mg/yr	Clinker capacity[a] 10^3 tons/yr
Alamo Cement Co.			
San Antonio, TX	1-Dry	680	750
Allentown Cement Co., Inc.			
Blandon, PA	2-Dry	844	930
Armstrong Cement & Sup. Co.			
Cabot, PA	2-Wet	281	310
Ash Grove Cement Co.			
Nephi, UT	1-Dry	544	600
Louisville, NE	2-Dry	872	961
Durkee, OR	1-Dry	454	500
Foreman, AR	3-Wet	857	945
Montana City, MT	1-Wet	254	280
Chanute, KS	2-Wet	450	496
Inkom, ID	2-Wet	191	210
Blue Circle, Inc.			
Ravena, NY	2-Wet	1,390	1,532
Atlanta, GA	2-Dry	555	612
Tulsa, OK	2-Dry	544	600
Calera, AL	2-Dry	544	600
Boxcrow Cement			
Midlothian, TX	1-Dry	907	1,000
Calaveras Cement Co.			
Redding, CA	1-Dry	591	651
Tehachapi, CA	1-Wet	386	425
California Portland Cement			
Mojave, CA	1-Dry	943	1,039
Colton, CA	2-Dry	680	750
Rillito, AZ	4-Dry	966	1,065
Capitol Cement Corporation			
Martinsburg, WV	3-Wet	746	822
Capitol Aggregates, Inc.			
San Antonio, TX	1-Dry/1-Wet	456/319	503/352
Carlow Group			
Zanesville, OH	2-Wet	547	603
Centex			
Laramie, WY	1-Dry	418	461
La Salle, IL	1-Dry	372	410
Fernley, NV	2-Dry	376	415

TABLE 5-33. PORTLAND CEMENT PRODUCTION FACILITES (CONTINUED)

Company and location	No./type of kiln	Clinker capacity[a] 10^3 Mg/yr	Clinker capacity[a] 10^3 tons/yr
Continental Cement Co., Inc.			
Hannibal, MO	1-Wet	544	600
Dixon-Marquette			
Dixon, IL	4-Dry	475	524
Dragon Products Company			
Thomaston, ME	1-Wet	413	455
Essroc Materials			
Nazareth, PA	1-Dry	874	963
Speed, IN	2-Dry	863	951
Bessemer, PA	1-Dry/1-Wet	295/191	325/211
Frederick, MD	2-Wet	336	370
Logansport, IN	2-Wet	367	404
Florida Crushed Stone			
Brooksville, FL	1 - Dry	518	571
Giant Cement Company			
Harleyville, SC	4 - Wet	789	870
Gifford-Hill & Co., Inc.			
Harleyville, SC	1 - Dry	560	617
Oro Grande, CA	7 - Dry	1,041	1,148
Riverside, CA	2 - Dry	100	110
Glens Falls Cement Co.			
Glens Falls, NY	1-Dry	450	495
Hawaiian Cement Company			
Ewa Beach, HI	1-Dry	239	263
Heartland Cement Company			
Independence, KS	4-Dry	305	336
Hercules Cement Company			
Stockertown, PA	3-Dry	656	723

TABLE 5-33. PORTLAND CEMENT PRODUCTION FACILITES (CONTINUED)

Company and location	No./type of kiln	Clinker capacity[a] 10^3 Mg/yr	Clinker capacity[a] 10^3 tons/yr
Holnam, Inc.			
Theodore, AL	1-Dry	1,308	1,442
Clarksville, MO	1-Wet	1,190	1,312
Holly Hill, SC	2-Wet	991	1,092
Mason City, IA	2-Dry	806	888
Florence, CO	3-Wet	780	860
Fort Collins, CO	1-Dry	448	494
Dundee, MI	2-Wet	880	970
Artesia, MS	1-Wet	457	504
Seattle, WA	1-Wet	429	473
Three Forks, MT	1-Wet	283	312
Ada, OK	2-Wet	544	600
Tijeras, NM	2-Dry	448	494
Saratoga, AR	2-Wet	335	369
Morgan, UT	2-Wet	298	328
Independent Cement Corp.			
Catskill, NY	1-Wet	464	512
Hagerstown, MD	1-Dry	452	498
Kaiser Cement Corp.			
Permanente, CA	1-Dry	1,452	1,600
Keystone Cement Company			
Bath, PA	2-Wet	546	602
Kosmos Cement Co.			
Louisville, KY	1-Dry	657	724
Pittsburgh, PA	1-Wet	357	394
LaFarge Corporation			
New Braunfels, TX	1-Dry	865	954
Buffalo, IA	1-Dry	778	858
Demopolis, AL	1-Dry	655	722
Grand Chain, IL	2-Dry	1,076	1,186
Alphena, MI	5-Dry	1,773	1,954
Whitehall, PA	3-Dry	689	760
Sugar Creek, MO	2-Dry	437	482
Paulding, OH	2-Wet	445	490
Fredonia, KS	2-Wet	347	382
Lehigh Portland Cement			
Mason City, IA	1-Dry	689	760
Leeds, AL	1-Dry	591	651
Cementon, NY	1-Wet	506	558
Union Bridge, MD	4-Dry	900	992
Mitchell, IN	3-Dry	689	760
York, PA	1-Wet	90	99
Waco, TX	1-Wet	73	81

TABLE 5-33. PORTLAND CEMENT PRODUCTION FACILITES (CONTINUED)

Company and location	No./type of kiln	Clinker capacity[a] 10^3 Mg/yr	Clinker capacity[a] 10^3 tons/yr
Lone Star Industries			
Cape Girardeau, MO	1-Dry	1,002	1,104
Greencastle, IN	1-Wet	649	715
Oglesby, IL	1-Dry	422	465
Pryor, OK	3-Dry	623	687
Nazareth, PA	4-Dry	565	623
Sweetwater, TX	3-Dry	449	495
Medusa Cement Co.			
Charlevoix, MI	1-Dry	1,237	1,364
Clinchfield, GA	1-Dry/1-Wet	508/187	560/206
Wampum, PA	3-Dry	638	703
Mitsubishi Cement Corp.			
Lucerne Valley, CA	1-Dry	1,514	1,669
Monarch Cement Company			
Humboldt, KS	3-Dry	611	674
Des Moines, IA	2-Wet	272	300
National Cement Company			
Ragland, AL	1-Dry	767	845
Natl. Cement Co. of California			
Lebec, CA	1-Dry	590	650
North Texas Cement			
Midlothian, TX	3-Wet	816	900
Phoenix Cement Company			
Clarkdale, AZ	3-Dry	640	705
Rinker Portland Cement Corp.			
Miami, FL	2-Wet	512	564
River Cement Company			
Festus, MO	2-Dry	1,070	1,179
RMC Lonestar			
Davenport, CA	1-Dry	726	800
Roanoke Cement Company			
Cloverdale, VA	5-Dry	1,013	1,117
Signal Mountain Cement Co.			
Chattanooga, TN	2-Wet	408	450
South Dakota Cement			
Rapid City, SD	1-Dry/2-Wet	408/287	450/316

TABLE 5-33. PORTLAND CEMENT PRODUCTION FACILITES (CONTINUED)

Company and location	No./type of kiln	Clinker capacity[a] 10^3 Mg/yr	Clinker capacity[a] 10^3 tons/yr
Southdown, Inc.			
Victorville, VA	2-Dry	1,406	1,550
Brooksville, FL	2-Dry	1,089	1,200
Knoxville, TN	1-Dry	544	600
Fairborn, OH	1-Dry	553	610
Lyons, CO	1-Dry	408	450
Odessa, TX	2-Dry	499	550
St. Mary's Peerless Cement Co.			
Detroit, MI	1-Wet	533	610
Tarmac Florida, Inc.			
Medley, FL	3-Wet	933	1,028
Texas Industries			
New Braunfels, TX	1-Dry	689	759
Midlothian, TX	4-Wet	1,139	1,256
Texas-Lehigh Cement Co.			
Buda, TX	1-Dry	895	987
Total capacity reported	135-Dry/79-Wet	73,532	81,056

Source: Reference 153

[a] Kilns reported as inactive in 1990:

			Clinker capacity 10^3 Mg/year	Clinker capacity 10^3 tons/year
Ash Grove Cement	Foreman, AR	1 kiln	246	271
California Portland Cement	Rillito, AZ	2 kilns	245	270
Holnam, Inc.	Florence, CO	2 kilns	334	368
Lone Star Industries	Sweetwater, TX	1 kiln	150	165
Medusa Cement Company	Clinchfield, GA	1 kiln	187	206
Monarch Cement Company	Des Moines, IA	2 kilns	272	300
Tarmac Florida	Medby, FL	2 kilns	334	368
		Total active capacity	71,764	79,108

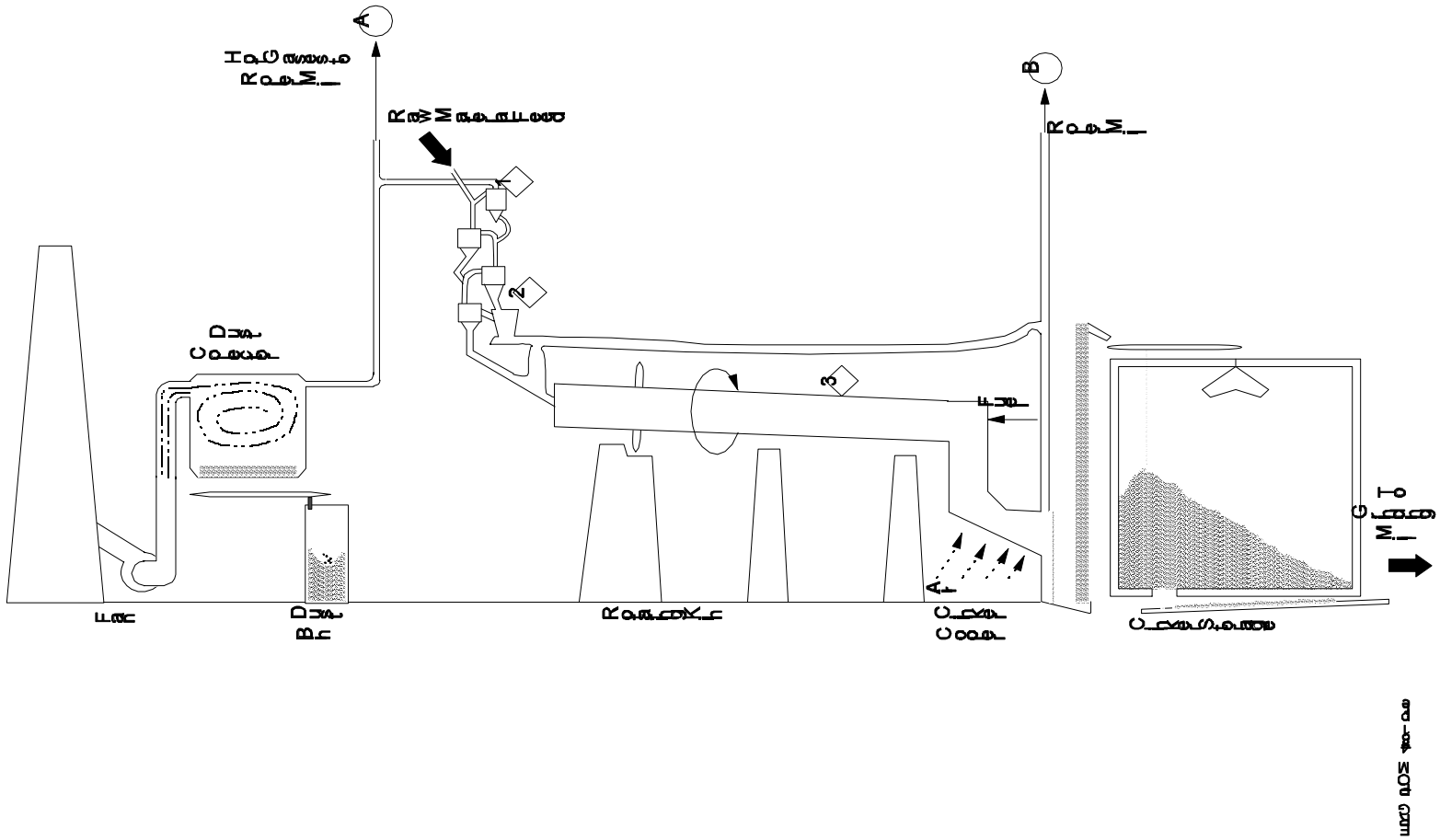

Figure 5-24. Process Flow Diagram of Portland Cement Manufacturing Process

Source: Reference 154,155.

Pyroprocessing of the raw material is carried out in the kiln, which is the heart of the Portland cement manufacturing process. During pyroprocessing, the raw material is transformed into clinkers, which are gray, glass-hard, spherically shaped nodules that range from 0.125 to 2.0 in. (0.32 to 5.1 cm) in diameter. The chemical reactions and physical processes that take place during pyroprocessing include the following:

1. Evaporation of uncombined water from raw materials as material temperature increases to 212°F (100°C).

2. Dehydration as the material temperature increases from 212°F (100°C) to approximately 800°F (430°C) to form the oxides of silicon, aluminum, and iron.

3. Calcination, during which carbon dioxide (CO_2) is evolved between 1,650°F (900°C) and 1,800°F (982°C) to form calcium oxide.

4. Reaction of the oxides in the burning zone of the rotary kiln to form cement clinker at temperatures of about 2,750°F (1,510°C).

The rotary kiln is a long, cylindrical, slightly inclined, refractory-lined furnace. The raw material mix is introduced into the kiln at the elevated end, and the combustion fuels are usually introduced into the kiln at the lower end in a countercurrent manner. The rotary motion of the kiln transports the raw material from the elevated end to the lower end. Fuel such as coal or natural gas, or occasionally oil, is used to provide energy for calcination. Lead is present in coal and oil. Use of other fuels such as chipped rubber, petroleum coke, and waste solvents is becoming increasingly popular.

Combustion of fuel during the pyroprocessing step contributes to potential lead emissions. Lead may also be present in the waste-derived fuel mentioned above. Because lead evaporates at 2,950°F (1,620°C), which is above normal kiln operating temperatures, much of the lead present in the raw materials is expected to be incorporated into the clinker. Most of the lead that is volatilized in the hot end of the kiln condenses onto PM upon cooling and is either removed in the downstream equipment, such as the APCD, or removed in the bypass gases or the preheater.

Pyroprocessing can be carried out using one of five different processes: wet, semi-dry, dry, dry with a preheater, and dry with a preheater/precalciner. These processes essentially accomplish the same physical and chemical steps described above. The last step in the pyroprocessing is the cooling of the clinker. This step recoups up to 30 percent of the heat input to the kiln system, locks in desirable product qualities by freezing mineralogy, and makes it possible to handle the cooled clinker with conventional conveying equipment. Finally, after the cement clinker is cooled, a sequence of blending and grinding operations is carried out to transform the clinker into finished Portland cement.

5.13.3 Emission Control Techniques

With the exception of the pyroprocessing operations, the emission sources in the Portland cement industry can be classified as either process emissions or fugitive emissions. The primary pollutant resulting from the fugitive sources is PM, which contains a fraction of lead. The control measures used for these fugitive dust sources are comparable to those used throughout the mineral products industries.

Process fugitive emission sources include materials handling and transfer, raw milling operations in dry process facilities, and finish milling operations. Typically, particulate emissions from these processes are captured by a ventilation system vented to fabric filters. Because the dust from these units is returned to the process, they are considered to be process units as well as air pollution control devices. The industry uses shaker, reverse air, and pulse jet filters, as well as some cartridge units, but most newer facilities use pulse jet filters. For process fugitive operations, the different systems are reported to achieve typical outlet PM loadings of 0.02 grains per actual cubic foot (gr/acf) (45 milligrams per cubic meter [mg/m^3]). Because the lead is in particle form, the performance of these systems relative to lead control is expected to be equivalent to this overall particulate performance. However, no data are available on lead performance of fugitive control measures.

In the pyroprocessing units, PM emissions are controlled by fabric filters (reverse air, pulse jet, or pulse plenum) and ESPs. The reverse air fabric filters and ESPs typically used to

control kiln exhausts are reported to achieve outlet PM loadings of 0.02 gr/acf (45 mg/m^3). Clinker cooler systems are controlled most frequently with pulse jet or pulse plenum fabric filters. A few gravel bed filters have been used on clinker coolers.

5.13.4 Emissions

Lead emission factor data are presented in Table 5-34. The principal source of lead emissions is expected to be from the kiln. The majority of the lead input from the raw materials and fuels is incorporated into the clinker. Lead volatilized from the kiln is either removed in the bypass gases, the preheater, or the APCD. Small quantities of emissions would be expected during raw materials processing and mixing in the form of fugitive dust containing naturally occurring quantities of lead compounds in raw materials.

Processing steps that occur after the calcining process in the kiln would be expected to be a much smaller source of emissions than the kiln. Emissions resulting from all processing steps include particulate matter. Additionally, emissions from the pyroprocessing step include other products of fuel combustion such as sulfur dioxide (SO_2), nitrogen oxides (NO_x), carbon dioxide (CO_2), and carbon monoxide (CO). Carbon dioxide from the calcination of limestone will also be present in the flue gas.

TABLE 5-34. LEAD EMISSION FACTORS FOR PORTLAND CEMENT MANUFACTURING FACILITIES

SCC Number	Emission Source	Control Device	Average Emission Factor lb/ton (kg/Mg)	Emission Factor Range lb/ton (kg/Mg)	Emission Factor Rating	Reference
3-05-006-06	Dry Process Kilns	FF	7.50×10^{-5} (3.75×10^{-5})[a]	---	D	155
		ESP	7.10×10^{-4} (3.55×10^{-4})[a]	---	D	155
		None	1.20×10^{-1} (6.00×10^{-2})[b]	---	U	23
3-05-006-13	Dry Process Raw Material Grinding or Drying	None	4.00×10^{-2} (2.00×10^{-2})[a]	---	U	23
3-05-006-17	Dry Process Clinker Grinding	None	4.00×10^{-2} (2.00×10^{-2})[b]	---	U	23
3-05-006-22	Dry Process Preheater Kilns	FF	7.50×10^{-5} (3.75×10^{-5})[a]	---	D	155
		ESP	7.10×10^{-4} (3.55×10^{-4})[a]	---	D	155
3-05-006-23	Dry Process Preheater/ Precalcinator Kiln	FF	7.50×10^{-5} (3.75×10^{-5})[a]	---	D	155
		ESP	7.10×10^{-4} (3.55×10^{-4})[a]	---	D	155
3-05-007-06	Wet Process Kilns	ESP	7.10×10^{-4} (3.55×10^{-4})[a]	---	D	155
		FF	7.50×10^{-5} (3.75×10^{-5})[a]	---	D	155
		None	1.00×10^{-1} (5.00×10^{-2})[b]	---	U	23

TABLE 5-34. LEAD EMISSION FACTORS FOR PORTLAND CEMENT MANUFACTURING FACILITIES (CONTINUED)

SCC Number	Emission Source	Control Device	Average Emission Factor lb/ton (kg/Mg)	Emission Factor Range lb/ton (kg/Mg)	Emission Factor Rating	Reference
3-05-007-17	Wet Process Clinker Grinding	None	2.00×10^{-2} (1.00×10^{-2})[b]	---	U	23

[a] Emission factors are expressed in lb (kg) of pollutant emitted per ton (Mg) of cement produced.
[b] Emission factors are expressed in lb (kg) of pollutant emitted per ton (Mg) of clinker produced.

"---" means data are not available.

ESP = Electrostatic Precipitator.
FF = Fabric Filter.

SECTION 6.0
EMISSIONS OF LEAD AND LEAD COMPOUNDS FROM OTHER SOURCES

6.1 PRESSED AND BLOWN GLASS

6.1.1 Source Description

The most recent estimate available for the amount of lead used in the manufacture of glass and ceramics in the United States is from 1986. During that year, 44,960 tons (40,800 Mg) of lead were consumed.[156] Based on an average lead content of 28 percent for leaded glasses, an estimated 160,500 tpy (145,700 Mg/yr) of leaded glass were produced.

Adding lead to glass imparts unique qualities, including the following:

- Brilliance;
- High refractive index/high dispersion without coloring;
- Economic melting temperatures, which allows a long working range suitable to traditional methods of handworking and machining;
- High density;
- Softness, to permit cutting and decorating;
- Chemistry suitable to acid polishing; and
- High durability.[157]

Lead glass is basically composed of silica sand and lead oxide. The lead oxide content usually ranges from 12 to 60 percent, although some types may contain as much as 92 percent lead oxide.

Lead-containing glasses are used primarily in optical glasses (such as binoculars, microscopes, telescopes), lead crystal, and cathode ray tubes for televisions, computers, and video game screens. Demand for lead for use in glass has remained stable over the past few years for most applications, with the exception of cathode ray tubes, where growth in use reflects an increased demand for video and computer terminals.[158] The 1992 TRI listed pressed and blown glass as the third largest category for lead air emissions. The 15 facilities reporting lead emissions in the 1992 TRI are listed in Table 6-1.[159]

6.1.2 Process Description

The following three basic operations are performed in all leaded glass manufacturing facilities:

- Raw material preparation;
- Melting; and
- Forming.

A generic process flow diagram for leaded glass manufacturing facilities is shown in Figure 6-1.

First, raw material, including silica sand, limestone, soda ash, and litharge (PbO) are received separately at a production facility called a batch plant. The coarse materials are crushed and stored in segregated bins, transferred to a weigher, and then mixed with cullet (recycled glass) to ensure homogeneous melting. Batch weighing and mixing systems may be operated manually or may be fully automated. In preparing the high-density components for manufacturing leaded glass, most plants use high-intensity, rotating-barrel type mixers, which tumble the batch upon itself in a revolving drum or double cone. The mixture is held in a batch storage bin until it is fed to the melting furnace.

TABLE 6-1. GLASS MANUFACTURERS (SIC 3229) IN THE UNITED STATES REPORTING LEAD AND LEAD COMPOUND EMISSIONS UNDER SARA 313

Facility	Location
Corning Asahi Video Products Co.[a]	State College, PA
Corning Inc. Fall Brook Plant	Corning, NY
Corning Inc. Stueben Plant	Corning, NY
Corning, Inc.	Danville, VA
General Electric Company	Niles, OH
GTE Products Corporation	Central Falls, RI Versailles, KY
Lancaster Glass Corporation[b]	Lancaster, OH
Lenox Crystal, Inc.	Mount Pleasant, PA
OI-NEG TV Products, Inc.[a]	Columbus, OH Perrysburg, OH Pittston, PA
Schott Glass Technologies, Inc.	Duryea, PA
St. George Crystal Ltd.	Jeannette, PA
Thomson Consumer Electronics[a]	Circleville, OH
Total	

Source: Reference 159

[a] This source manufactures components for cathode ray tubes.
[b] The only glass manufacturer (SIC 3229) in the 1992 TRI that reported lead compound emissions instead of lead emissions.

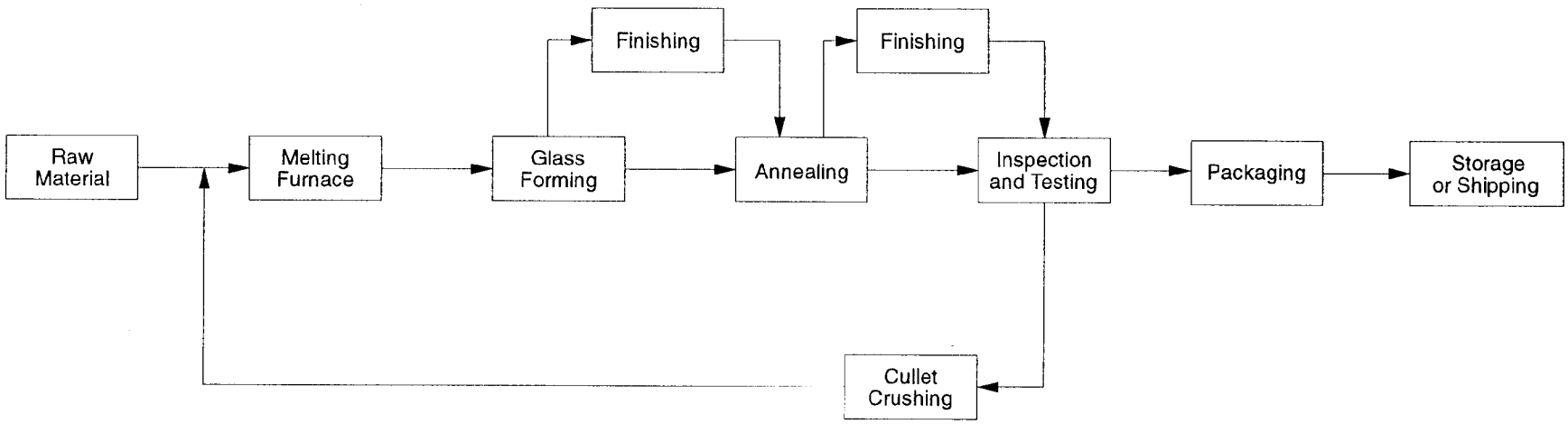

Figure 6-1. Glass Manufacturing Process

Source: Reference 160.

Next, these raw materials are melted in a melting furnace to form glass. Production of leaded glass requires heat to convert the raw material litharge to a homogeneous melt that turns to a rigid glass upon cooling. Lead that has been melted at a high temperature is introduced into the raw material, where it becomes incorporated into the glass matrix.[157] The glass furnaces are charged continuously or intermittently by means of manual or automatic feeders. Production of low-viscosity glass--such as crystal, which requires special production techniques--is carried out in day tanks. These tanks, usually built from refractory brick, are typically heated rapidly by one to three pairs of oil or gas burners.[161] In addition, electric "boosting" may or may not be employed to add control over glass composition.[161] In the furnace, the mixture of materials is held in a molten state at about 2,800°F (1,540°C) until it acquires the homogenous character of glass. It is then cooled gradually in other sections of the furnace to about 2,200°F (1,200°C) to make it viscous enough to form.

Finally, the molten material is drawn from the furnace and worked on forming machines by a variety of methods, including pressing, blowing, drawing, or rolling to produce the desired product.

The end product undergoes finishing (decorating or coating) and annealing (removing unwanted stress areas in the glass). Any damaged or undesirable glass is transferred back to the batch plant to be used as cullet.

6.1.3 Emissions

Air emissions from leaded glass manufacturing occur in three areas: raw material blending and transport, melting, and forming and finishing. Fugitive dust is produced by the blending and transport process. In most cases, fabric filters are used on silos and the transport system to confine the particulate emissions. Lead emissions from the raw material preparation and forming and finishing operations are generally considered to be negligible.

The glass melting furnace is the principal source of lead emissions from a glass plant. The main lead compounds found in the furnace discharges are lead carbonates from

gas-heated furnaces and lead sulfates from liquid fuel-fired furnaces.[162] The composition and rate of emissions from glass melting furnaces vary considerably, depending upon the composition of glass being produced and, to a lesser extent, upon the design and operating characteristics of the furnace. Emissions consist primarily of products of combustion and entrained PM.

The use of fully electric furnaces is estimated to reduce lead compound emissions by a factor of 4 to 10.[162] Other methods used to control emissions include:

- Use of raw materials with a lower content of fines;
- Maintenance of free moisture of the batch at about 4 to 5 percent;
- Control of the air-to-fuel ratio;
- Reduction of air flow rate on the furnace.[163]

Emissions can be further reduced by lowering furnace temperature by such means as increasing broken glass ratios, modifying batch preparation, and by increasing the amount of electrical boosting.[163]

If these techniques are inadequate for meeting desired emission levels, a baghouse provides the most effective means of controlling particulate emissions. Collection efficiencies have exceeded 99 percent on certain types of glass furnaces. Full-scale units are operating with filtering velocities of 1 to 2 fpm (0.5 to 1 cm/s). Precautions must be taken, however, to address problems associated with acid gases and high temperatures. SO_2 and SO_3 in the furnace exhaust may cause severe acid corrosion, and hot off-gases cause deterioration of the bag material. Bags made of felted Nomex, silicone-treated glass fiber, and Dacron have been used effectively in these applications.[163]

Wet scrubbers have proven relatively ineffective in collecting submicron-size particulate that are characteristic of glass furnace emissions. Test of a low-pressure-drop wet centrifugal scrubber showed an overall efficiency of only 52 percent. Higher-energy venturi

scrubbers require a pressure drop of over 50 in. H_20 (13 kPa) to achieve an efficiency of approximately 97 percent.[163]

Tests on certain glass furnaces controlled by ESPs showed efficiencies between 80 and 90 percent.[163]

The composition and rate of emissions from glass melting furnaces vary considerably, depending on the composition of glass being produced and, to a large extent, on the design and operating characteristics of the furnace. Emissions consist primarily of products of combustion and entrained PM.

One emission factor for uncontrolled lead emissions from leaded glass manufacturing is presented in Table 6-2.[160] Based on the type of controls currently used in the glass manufacturing industry (baghouses, venturi scrubbers, ESPs), an overall control efficiency of at least 90 percent is expected.

TABLE 6-2. LEAD EMISSION FACTOR FOR GLASS MANUFACTURING

SCC Number	Emission Source	Control Device	Average Emission Factor in lb/ton (kg/Mg)	Emission Factor Rating
3-05-014	All processes	Uncontrolled	5 (2.5)	B

Source: Reference 160.

6.2 LEAD-ACID BATTERY PRODUCTION

6.2.1 Source Description

Today's major use of lead is in lead-acid storage batteries. The electrical systems of vehicles, ships, and aircraft depend on such batteries for start-up and, in some cases, batteries provide the actual motive power. The battery industry is divided into two main production sectors: starting, lighting, and ignition (SLI) batteries and industrial/traction batteries.

The Battery Council International (BCI) reported a 1992 SLI battery production of 81.07 million units. This total includes both original equipment market and replacement market automotive-type batteries. Using the BCI estimate of about 18-20 lb lead per unit, the lead consumption for this sector was 768,600 tons. The industrial/traction (stationary/motive power) sector was estimated to have consumed 220,500 tons of lead.[50]

There are 65 lead-acid battery manufacturing facilities in the United States.[164,165] Table 6-3 lists these battery manufacturing facilities and their location.

6.2.2 Process Description [166]

Figure 6-2 presents a flow diagram for lead-acid battery production. Lead-acid storage batteries are produced from lead alloy ingots and lead oxide. The lead oxide may be produced by the battery manufacturer or may be purchased from a supplier. Lead oxide is produced either by the ball mill process or the Barton process. Both processes incorporate a baghouse for product recovery and to control air emissions.

Battery manufacturing begins with grid casting and paste mixing. Battery grids are manufactured by either casting or stamping operations. In the casting operation, lead alloy ingots are charged to a melting pot; the molten lead then flows into molds that form the battery grids. These grids may be connected in a continuous strip (concast) or cast into doublets. The stamping operation consists of cutting or stamping the battery grids from lead sheets. The paste mixing operation is conducted in a batch-type process to make paste for application to the grids. A mixture of lead oxide powder, water, and sulfuric acid produces a positive paste. The negative paste is made with the same ingredients in slightly different proportions with the addition of an expander (generally a mixture of barium sulfate, carbon black, and organic fibers). Pasting machines then force these pastes into the interstices of the grids to make plates. Concast plates are then cut apart into single plates for curing in a controlled atmosphere.

TABLE 6-3. LEAD-ACID BATTERY PRODUCTION FACILITIES

Company	Location[a]
Battery Builders Inc.	Naperville, IL
C&D Charter Power Systems, Inc.	Leola, PA
	Conyers, GA
	Attica, IN
	Hugeunt, NY
Daniell Battery Mfg. Co.	Baton Rouge, LA
Douglas Battery Mfg. Co.	Winston-Salem, NC
	North Kansas City, MO
Eagle-Picher Ind. Inc.	Socorro, NM
East Penn Manufacturing Co., Inc.	Lyon Station, PA
Enpak, Inc.	Memphis, TN
Exide Corp.	Burlington, IA
	Frankfurt, IN
	Laureldale, PA
	Harrisburg, PA
	Manchester, IA
	Salina, KS
	Greer, SC
	Bristol, TN
Hawker Energy Prods. Inc.	Warrenburg, MO
GMC Delco Remy Division	Fitzgerald, GA
	Anaheim, CA
	Olathe, KS
	Muncie, IN
	New Brunswick, NJ

TABLE 6-3. LEAD-ACID BATTERY PRODUCTION FACILITIES (CONTINUED)

Company	Location[a]
GNB Inc.	City of Industry, CA
	Farmers Branch, TX
	Florence, MS
	Kankakee, IL
	Columbus, GA
	Fort Smith, AR
GNB Inc. ABD	Shreveport, LA
GNB Inc. Battery Technologies Inc.	Dunmore, PA
GNB Industrial Battery Co.	Kansas City, KS
Industrial Battery Eng.	Sun Valley, CA
Interspace/Concorde Battery Corp.	West Covina, CA[b]
Johnson Controls Battery Group, Inc.	Canby, OR
	Holland, OH
	Middletown, DE
	Geneva, IL
	Forton, CA
	Tampa, FL
	St. Joseph, MO
	Winston-Salem, NC
	Milwaukee, WI
KW Battery Co.	Skokie, IL
Power Battery Co., Inc.	Paterson, NJ
Powerflow Sys. Inc.	Terrell, TX[b]
Power Source Inc.	Ooltewah, TN[b]
Ramcar Batteries Inc.	City of Commerce, CA
Standard Ind. Inc.	San Antonio, TX[b]
Superior Battery Mfg. Co., Inc.	Russell Springs, KY

TABLE 6-3. LEAD-ACID BATTERY PRODUCTION FACILITIES (CONTINUED)

Company	Location[a]
Surrette America	Northfield, NH
Teledyne Battery Prods.	Redlands, CA
Trojan Battery Co.	Santa Fe Springs, CA
	Lithonia, GA
Universal Tool & Engineering Co.	Indianapolis, IN[b]
U.S. Battery Mfg. Inc.	Evans, GA
U.S. Battery Mfg. Co. & Battery	Corona, CA[b]
Voltmaster Co., Inc.	Corydon, IA[b]
Yuasa-Exide Inc.	Hays, KY
	Richmond, KY
	Laureldale, PA
	Sumter, SC

Source: Reference 24,164,165

[a] These facilities reported lead emissions during 1993, unless otherwise noted. Lead emissions are in the form of compounds, most often lead oxides. Lead emissions are not emitted to the air as elemental lead, but they are measured as lead.

[b] Facility reported emissions of lead compounds.

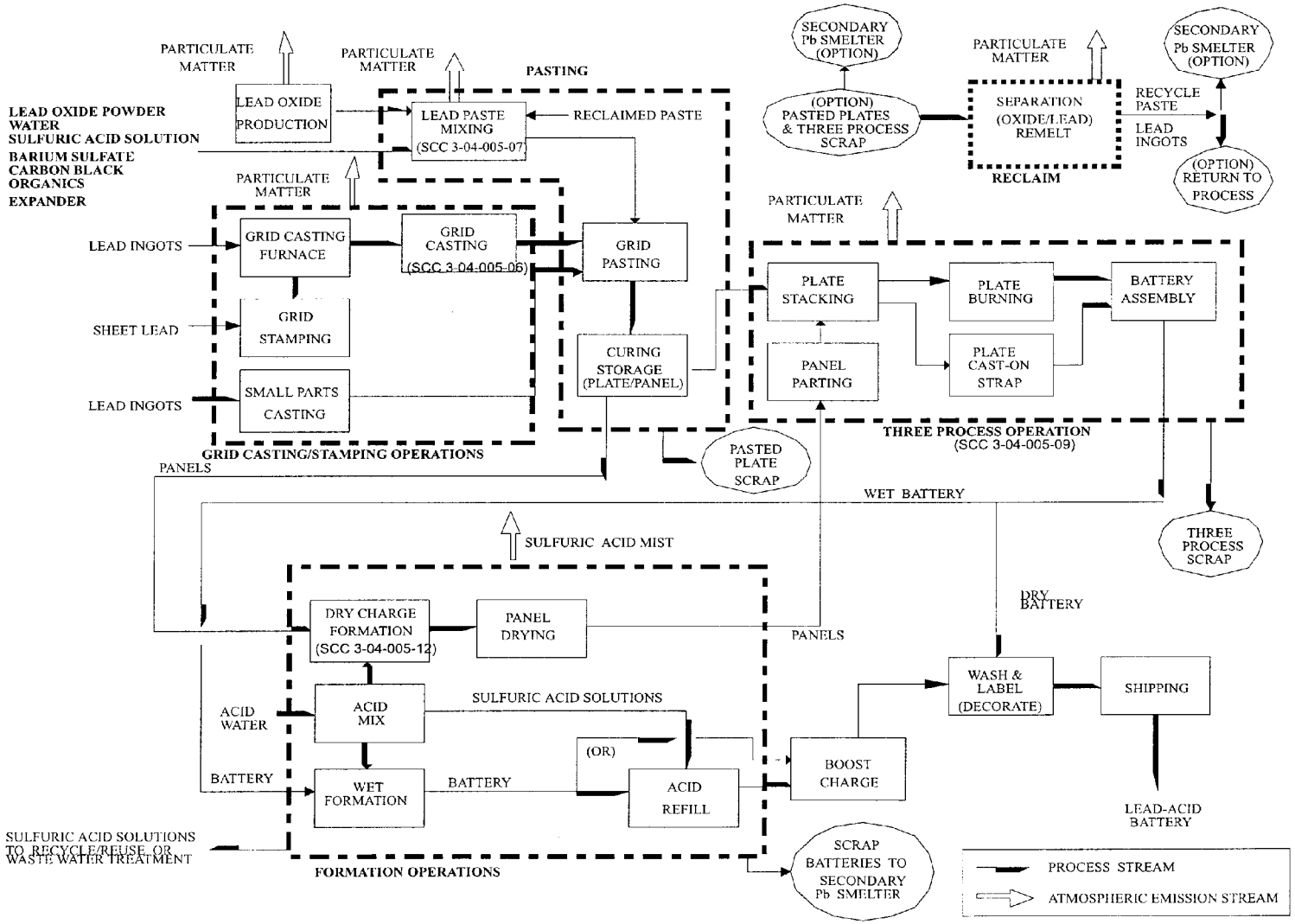

Figure 6-2. Process Flow Diagram for Lead-Acid Battery Production

Source: Reference 166.

After the plates are cured, they are sent to the three-process operation of plate stacking, plate burning, and element assembly into the battery case. In this operation, the doublet plates are first cut apart and, depending on whether they are dry-charged or to be wet-formed, they are stacked in an alternating positive and negative block formation with insulators between them. These insulators are made of non-conductive materials such as plastic or glass fiber. During the burning operation, leads are welded to tabs on each positive or negative plate, fastening the assembly (element) together. An alternative to this operation is the cast-on strap connection, where molten lead is poured around and between the plate tabs to form the connection. Then a positive tab and negative tab are independently welded to produce an element. The completed elements are then automatically placed into battery cases either before formation (wet batteries) or after formation (dry batteries). A top is placed on the battery case. The posts on the case top are welded to two individual points that connect the positive and negative plates to the positive and negative posts, respectively.

During formation, the inactive lead oxide-sulfate paste is chemically converted into an active electrode. Lead oxide in the positive plates is oxidized to lead peroxide; in the negative plates it is reduced to metallic lead. The unformed plates are placed in a dilute sulfuric acid solution. The positive plates are connected to the positive pole of a direct current (dc) source and the negative plates are connected to the negative pole of the dc source. In the wet formation process, the elements are assembled into the battery case before forming. After forming, the spent acid may be dumped and fresh acid added, and a boost charge is added to complete the battery. In the dry formation process, the individual plates may be assembled into elements first, and then formed in large tanks of sulfuric acid or formed as individual plates. The formed elements from either method are placed in the battery cases, the positive and negative parts of the elements are connected to the positive and negative terminals of the battery, and the batteries are shipped dry.

Defective parts are either reclaimed at the battery plant or are sent to a secondary lead smelter for recycling. Lead reclamation facilities at battery plants are generally pot-type furnaces for non-oxidized lead. Approximately 1 to 4 percent of the lead processed at a typical lead-acid battery plant is recycled through reclamation as paste or metal.

6.2.3 Emissions [165,166]

Lead oxide emissions result from the discharge of air used in the lead oxide production process. Fabric filtration is generally used as part of the process control equipment to collect particulate emissions from lead oxide facilities.

Lead and other particulate matter are generated in several operations within storage battery production, including grid casting, lead reclamation, slitting, small parts casting, and during the three-process operation. These particulates are usually collected by ventilation systems and ducted through fabric filters (baghouses).

Significant emissions of lead oxide may result during the first step of the paste mixing operation when dry ingredients are charged to the mixer. These emissions are usually collected and ducted through a baghouse (or impingement wet scrubber). Also, during the second step, when moisture is present in the exhaust stream from acid addition, emissions from the paste mixer are generally collected and ducted to either an impingement scrubber or fabric filter. Emissions from grid casting machines, lead reclamation facilities, and the three-process operation are sometimes processed by impingement wet scrubbers, but normally through a baghouse.

Sulfuric acid mist emissions are generated during the formation operation. These emissions are significantly higher for dry formation processes than for wet formation processes because wet formation takes place in battery cases and dry formation is conducted in open tanks (a practice which is decreasing within the industry). Wet formation processes usually do not require control. Emissions of sulfuric acid mist from dry formation processes can be reduced by more than 95 percent by the use of mist eliminators or scrubbers. Also, acid mist emissions from dry formation are commonly controlled by the application of surface foaming agents over the acid baths or receptacles. Other emission control practices are water sprays and good work practices in general.

Emission reductions of 99 percent and above can be obtained when fabric filters are used to control slitting, paste mixing, and three-process operations. The use of scrubbers to

control emissions from paste mixing and grid casting operations, and at lead reclamation facilities, can result in emissions reductions of 85 percent or better.

Many lead-acid battery manufacturing plants use central vacuum systems for general housekeeping practices. However, these units may be subject to the New Source Performance Standards (NSPS) for lead-acid battery manufacture as an "other lead emitting source." The industry typically uses fabric filters to control exhaust emissions from these vacuum systems.

Fabric filters have become an accepted method for controlling emissions from grid casting and lead reclamation. Also, since the original NSPS development project, two new lead control techniques have been applied to various facilities manufacturing lead-acid batteries. These are the use of cartridge collectors as primary control devices and the use of high efficiency particulate air (HEPA) filters for secondary collection. Specifically, cartridge collectors and HEPA filters can be used in grid casting, paste mixing, lead oxide manufacturing, the three-process operation, or lead reclamation.

Table 6-4 presents lead emission factors for lead-acid battery manufacturing operations and lead oxide production. The emission factors presented include lead and its compounds, expressed as elemental lead. Controlled emission factors expressed in terms of lead emissions per lead processed or production were not readily available. Therefore, the appropriate control efficiency should be applied to the uncontrolled factors. Bag filters and scrubbers are the most commonly used controls for lead acid batteries.[24] Emissions data for lead-acid battery manufacturing facilities, including grid casting, paste mixing, lead oxide manufacturing, three-process operation, lead reclamation, and formation are presented in the EPA document *Review of New Source Performance Standards for Lead-Acid Battery Manufacture*.[165]

TABLE 6-4. LEAD EMISSION FACTORS FOR LEAD-ACID BATTERY PRODUCTION

SCC Number	Emission Source	Control Device	Average Emission Factor in lb/1000 batteries (kg/1000 batteries)[a]	Emission Factor Range in lb/1000 batteries (kg/1000 batteries)[a]	Emission Factor Rating	Reference
3-04-005-05	Total Production	None	---	1.53×10^{1} - 1.77×10^{1} (6.95 - 8.05)	U	166
3-04-005-06	Grid Casting	None	---	7.70×10^{-1} - 9.00×10^{-1} (3.50×10^{-1} - 4.09×10^{-1})	B	166
		Rotoclone	6.73×10^{-2} (3.06×10^{-2})	6.10×10^{-2} - 8.00×10^{-2} (2.77×10^{-2} - 3.64×10^{-2})	U	92
3-04-005-07	Paste Mixing	None	---	1.10 - 2.49 (5.00×10^{-1} - 1.13)	B	166
		Wet Scrubber - Medium Efficiency	4.00×10^{-4} (2.00×10^{-4})[b]	---	U	22
3-04-005-08	Lead Oxide Mill (Baghouse Outlet)	FF	---	1.10×10^{-1} - 1.20×10^{-1} (5.00×10^{-2} - 5.50×10^{-2})	C	166
3-04-005-09	Three-process Operation	None	---	1.06×10^{1} - 1.46×10^{1} (4.82 - 6.64)	B	166
		FF	3.77×10^{-1} (1.71×10^{-1})	2.40×10^{-1} - 4.59×10^{-1} (1.09×10^{-1} - 2.09×10^{-1})	U	92
3-04-005-10	Lead Reclaiming Furnace	None	---	7.70×10^{-1} - 1.38 (3.50×10^{-1} - 6.27×10^{-1})	B	166
		Scrubber	1.01×10^{-1} (5.05×10^{-2})[b]	6.40×10^{-2} - 1.42×10^{-1} (3.20×10^{-2} - 7.10×10^{-2})[b]	U	168
3-04-005-11	Small Parts Casting	None	1.00×10^{-1} (4.60×10^{-2})	---	C	166
3-04-005-12	Formation	None	---	---		166

[a] Emission factors are expressed in lb (kg) of lead emitted per 1000 batteries produced, except where noted.
[b] Emission factors are expressed in lb (kg) of lead emitted per ton (Mg) of lead produced.
"---" means data are not available.

6.3 LEAD OXIDES IN PIGMENTS

Lead oxide is used primarily in the manufacture of lead-acid storage batteries (see Section 6.2). It is also useful as a pigment in paints and ceramic glazes. The principal oxides of lead include litharge, lead dioxide, and red lead. Black oxide, the most widely used form of lead oxide, consists of a mixture of litharge and finely divided metallic lead. Red lead is a major lead pigment. Other lead pigments include white lead, lead chromates, and leaded zinc oxides. Total lead oxide production in the United States in 1995 was 68,013 tons, excluding lead oxide used in batteries (61,700 Mg).[167]

6.3.1 Source Location

The distribution of facilities manufacturing lead oxides in lead pigments in the United States is presented in Table 6-5.

6.3.2 Process Description

Lead Oxides

Lead Monoxide--Most lead oxides and many of the major lead pigments are derived from lead monoxide, in a form called litharge. There are four principal processes for producing high-grade litharge:

- Metallic lead is partially oxidized and milled to a powder, which is charged into a reverberatory furnace at about 1,100°F (590°C) to complete the oxidation to ordinary "chemical litharge;"
- Pig lead is oxidized and stirred in a reverberatory furnace or rotary kiln to form lead monoxide;
- Molten lead is run into a cupelling furnace held at about 1,800°F (1,020°C), and molten litharge is produced; and
- Molten lead at about 950°F (510°C) is atomized into a flame where it burns vigorously, producing "sublimed" or "fumed" litharge.

TABLE 6-5. U.S. FACILITIES MANUFACTURING LEAD OXIDES IN PIGMENTS

Lead Oxides	
Lead Monoxide	
Admiral Chemical Co.	Peabody, Massachussetts
ASARCO Incorporated	Denver, Colorado
Eagle-Picher Industries, Inc., Electronics Division, Chemicals Department	Joplin, Missouri
Great Western Inorganics	Golden, Colorado
Hammond Lead Products, Inc.	Hammond, Indiana Pottstown, Pennsylvania
Johnson Matthey, Inc., Aesar/Alfa	Wardhill, Massachusetts
Micron Metals, Inc., Atlantic Equipment Engineers Division	Bergenfield, New Jersey
Oxide & Chemical Corporation	Brazil, Indiana Lancaster, Ohio
Pacific Dunlap	Columbus, Georgia
Quenell Enterprises, Inc., Daelco Division	City of Commerce, California
Lead Dioxide	
Aithaca Chemical Corporation	Uniondale, New York
Eagle-Picher Industries, Inc., Electronics Division, Chemicals Department	Joplin, Missouri
Hammond Croton, Inc.	South Plainfield, New Jersey
PSI Chemicals Division, Pluess & Staufer International, Inc.	Stamford, Connecticut
Spectrum Chemical Manufacturing Corporation	Gardena, California
Lead Pigments	
Red Lead	
Hammond Lead Products, Inc.	Hammond, Indiana Pottstown, Pennsylvania
Oxide & Chemical Corporation	Brazil, Indiana
Spectrum Chemical Manufacturing Company	Gardena, California
Robert I. Webber Co., Inc.	City of Commerce, California Stamford, Connecticut
White Lead	
Hammond Lead Products, Inc., Halstab Division	Hammond, Indiana
National Chemical Co., Inc.	Chicago, Illinois

TABLE 6-5. U.S. FACILITES MANUFACTURING LEAD OXIDES IN PIGMENTS (CONTINUED)

Lead Chromate	
Aithaca Chemical Corporation	Uniondale, New York
ALL-Chemic, Ltd.	Fort Lee, New Jersey
Cookson Pigments, Inc.	Newark, New Jersey
Engelhard Corporation, Pigments and Additives Division	Louisville, Kentucky
Kikuchi Color & Chemicals Corp. U.S.A.	Paterson, New Jersey
Mineral Pigments Corporation, Chemical Color Division	Beltsville, Maryland
National Chemical Co., Inc.	Chicago, Illinois
Spectrum Chemical Manufacturing Company	Gardena, California
Wayne Pigment Corporation	Milwaukee, Wisconsin
Lead Antimonate Yellow Pyrochlore	
Ferro Corporation, Coatings, Colors & Electronic Materials Group, Color Division	Cleveland, Ohio

Source: References 169,170,171

In all cases, the product must be cooled quickly to below 570°F (300°C) to avoid formation of red lead.[163]

Black Oxides--Black oxide typically contains 60 to 80 percent litharge and 20 to 40 percent finely divided metallic lead. It is used exclusively in the manufacture of lead-acid storage batteries, specifically in the production of battery paste. It is usually produced by the Barton process, but is also produced by the ball mill process. In both processes, a baghouse is used for product recovery.

The Barton process is shown in Figure 6-3. Lead ingots are first melted and then fed into a vessel or pot, where the molten lead is rapidly stirred and atomized into small droplets. The droplets of molten lead are then oxidized by air drawn through the pot and conveyed to a product recovery system, which typically consists of a settling chamber, cyclone, and baghouse.

In the ball mill process, shown in Figure 6-4, lead pigs or ingots are charged with air into a ball mill. Oxidation is initiated by the heat generated by the tumbling lead ingots. During milling, the lead oxide that forms on the surface of the ingots and fine particles of unoxidized lead are broken off, forming a fine dust that is removed from the mill by a circulating air stream. Air flow through the mill, the temperature of the charge, and the weight of the charge are controlled to produce a specified ratio of lead oxide to finely divided metallic lead. Centrifugal mills and/or cyclones are used to collect large particles, while the finer particles are collected in a baghouse.

Lead Dioxide--Lead dioxide is a vigorous oxidizing agent used in a number of chemical process industries. It decomposes to lower oxides rather easily, releasing oxygen. It is commercially produced either by the treatment of an alkaline red lead slurry with chlorine, or by anodic oxidation of solutions of lead salts. The amount of lead dioxide produced is insignificant and of little commercial importance.[163]

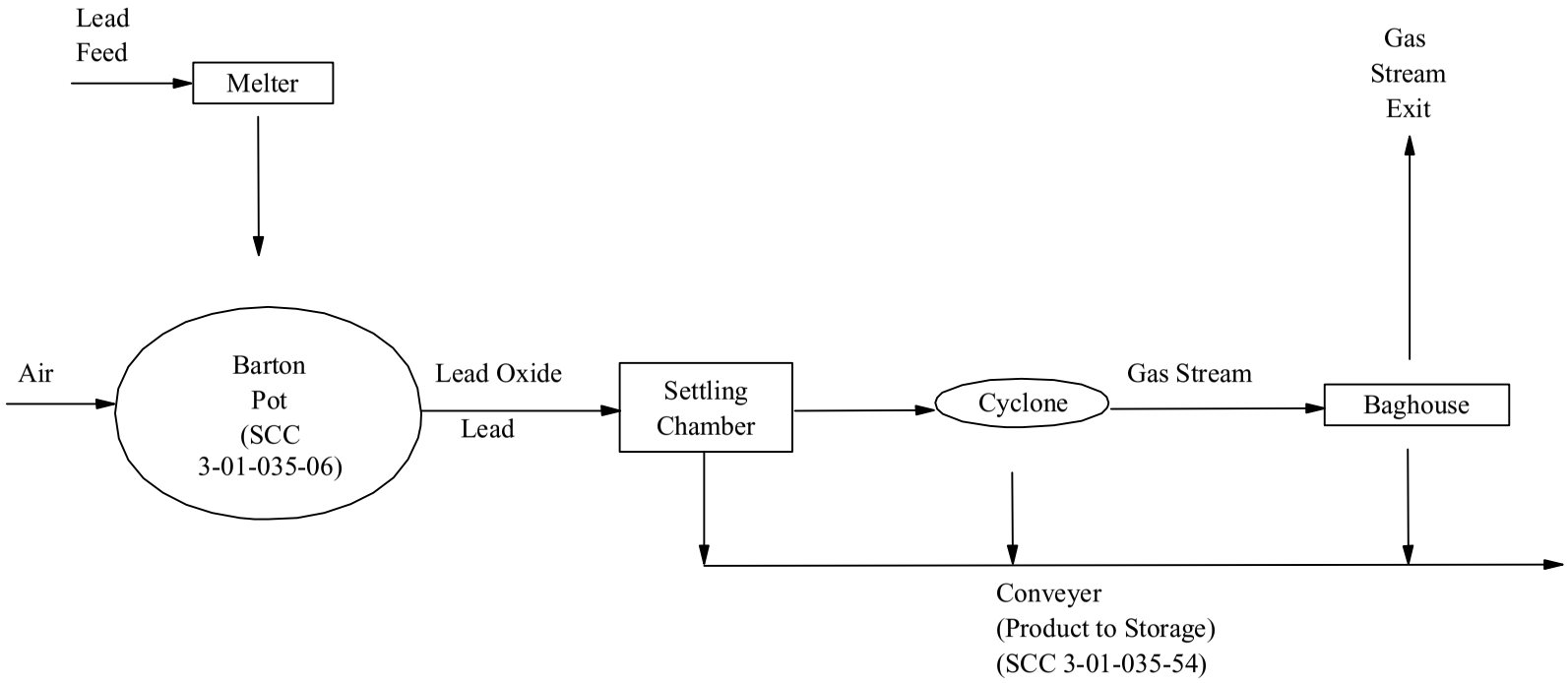

Figure 6-3. Barton Pot Process for Lead Oxide Manufacture

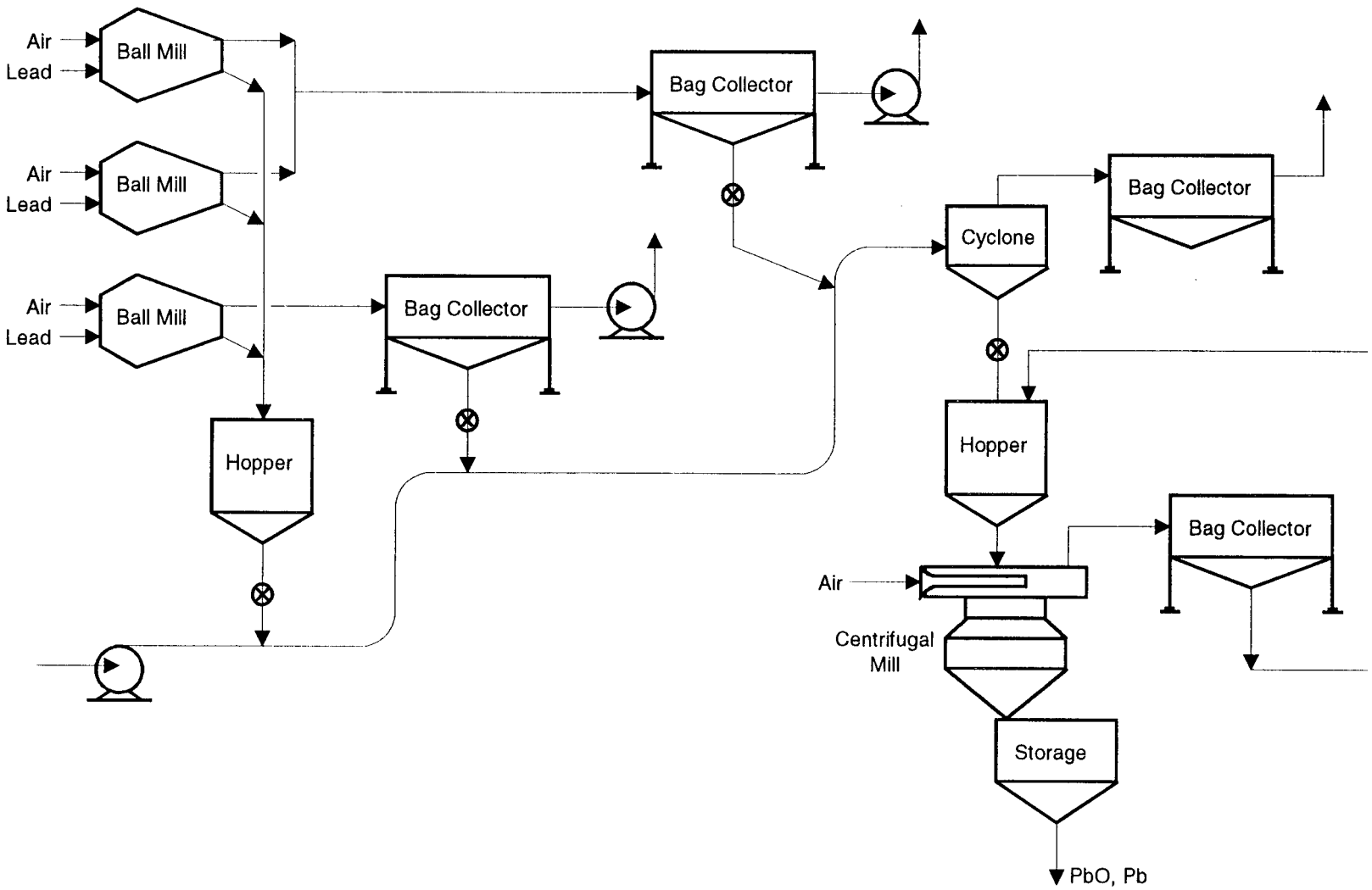

Figure 6-4. Ball Mill Process for Lead Oxide Manufacture

Lead Pigments

Red Lead--Red lead, also called minium, is used principally in ferrous metal protective paints. The manufacture of red lead begins by charging litharge into a reverberatory furnace held at 900 to 950°F (480 to 510°C). The litharge is oxidized until a specified amount of lead monoxide is converted to Pb_3O_4. A typical red lead manufacturing plant will produce 30 tons (27 Mg) of red lead per day.

White Lead--The commercial varieties of white lead include basic carbonate white lead, basic sulfate white lead, and basic lead silicate. Manufacture of basic carbonate white lead is based on the reaction of litharge with acetic acid. The product of this reaction is then reacted with carbon dioxide to form lead carbonate, which is contained in a slurry and recovered by wet filtration and drying. Other white leads are made either by a chemical or a fuming process. The chemical process is like that described above except that other mineral dioxides are used in place of carbon dioxide. The fuming process differs in that the product is collected in a baghouse rather than by wet slurry filtration and drying.

Lead Chromate--Chromate pigments are generally manufactured by precipitation or calcination. A commonly used process is the reaction of lead nitrate solution with sodium chromate solution:

$$Pb(NO_3)_2 + Na_2(CrO_4) = PbCrO_4 + 2NaNO_3$$

The lead nitrate solution can be made using either lead monoxide or by reacting molten lead with nitric acid.

Leaded Zinc Oxides--Leaded zinc oxides are used almost entirely as white pigments for exterior oil-base paints. Leaded zinc oxides are produced either by smelting and cofuming combinations of zinc and lead sulfide ores or by mechanically blending separately

prepared fractions of zinc oxide and basic lead sulfate. The first process involves heating the two materials to produce a fume, which is cooled and collected in a baghouse.

6.3.3 Emissions

Lead Oxides

Exhaust gas characteristics typical of those associated with the manufacture of litharge and black oxide, using the ball mill and Barton processes, are summarized in Table 6-6. Based on an average lead emission rate of 0.44 lb/ton (0.22 g/kg) product and consumption of 65,600 tons (59,600 Mg) of lead for other oxides, an estimated 14 tons (13 Mg) of lead was emitted into the atmosphere by lead oxide production facilities (other than storage battery production) in 1991.[172]

Lead Pigments

Red Lead--Collection of dust and fume emissions from the production of red lead is an economic necessity. Consequently, particulate emissions are minimal. Particulate emissions after a baghouse have been measured at 1.0 lb/ton (0.5 g/kg) product.[163] Only lead monoxide and oxygen go into the production of red lead, so most of the particulate emissions can be assumed to be lead.

Data on emissions from the production of white lead pigments, leaded zinc oxides, and chrome pigments are not available.

Baghouses, usually preceded by dry cyclones or settling chambers, are the universal choice for the recovery of lead oxides and most pigments. The baghouses used are generally mechanical shaker types, and are operated at air-to-cloth ratios ranging from 1 to 3 fpm (0.5 to 1.5 cm/s). Other types, including pulse jet units, have also been used. Dry cyclones and/or settling chambers are usually installed upstream of the baghouse to capture larger particles and provide cooling. Performance data on several baghouse installations servicing lead oxide

TABLE 6-6. CHARACTERISTICS OF UNCONTROLLED EXHAUST GAS FROM LEAD OXIDE BALL MILL AND BARTON POT PROCESSES

Parameters	English Units	Standard International Units
Gas flow rate	2,300 acfm/tph Pb charged	1.2 $m^3/s.Mg.h^{-1}$ Pb charged
Temperature	250°F	120°C
Grain loading	3 to 5 gr/scf	7 to 11 g/m^3
Particle size distribution, wt%	0 to 1 µm - 4% 1 to 2 µm - 11% 2 to 3 µm - 23%	4% 11% 23%
Lead emission factor[a]	0.44 lb/ton product	0.22 g/kg product

Source: Reference 173

[a] Emissions are after a baghouse, which is considered process equipment.

production facilities are presented in Table 6-7. Collection efficiencies in excess of 99 percent are generally considered achievable.

Lead emission factors found in the literature for the manufacture of lead oxides and lead pigments are presented in Table 6-8. The emission factors for lead oxide production were assigned an E rating because of high variabilities in test run results and nonisokinetic sampling.

6.4 LEAD CABLE COATING

6.4.1 Source Description

About 90 percent of the lead cable covering produced in the United States is on lead-cured jacketed cables and 10 percent is on lead-sheathed cables.[174] Approximately 7,000 tons of lead were consumed for lead cable sheathing production in 1996.[175] Today, lead sheathing is only being used on power cables with voltage levels generally greater than 10 kV.

TABLE 6-7. PERFORMANCE TEST RESULTS ON BAGHOUSES SERVING LEAD OXIDE FACILITIES

	Barton Pot	Hammermill Furnace	Hammermill Furnace
Control system	Settling chamber/ cyclone/baghouse	Cyclone/baghouse	Cyclone/baghouse
Test point	Outlet	Outlet	Inlet
Particulate emissions:			
gr/dscf	0.032 - 0.056	0.012	32.9
g/m^3	0.074 - 0.13	0.028	75.7
lb/ton product	0.41 - 0.85	0.057	
gr/kg product	0.21 - 0.43	0.028	
Lead emissions:			
gr/dscf	0.024 - 0.046	0.008	30.3
g/m^3	0.055 - 0.11	0.018	69.7
lb/ton product	0.30 - 0.69	0.042	
gr/kg product	0.15 - 0.35	0.021	

Source: Reference 173

TABLE 6-8. LEAD EMISSION FACTORS FOR MANUFACTURE OF LEAD OXIDE IN PIGMENTS

SCC Number	Emission Source	Control Device	Average Emission Factor in lb/ton (kg/Mg)[a]	Emission Factor Rating
Lead Oxide Production				
3-01-035-06	Barton pot	None	4.40×10^{-1} (2.20×10^{-1})	E
3-01-035-07	Calciner	None	1.40×10^{1} (7.0)	E
		Baghouse	5.00×10^{-2} (2.50×10^{-2})	E
Pigment Production				
3-01-035-10	Red Lead	None	9.00×10^{-1} (4.50×10^{-1})	B
3-01-035-15	White Lead	None	5.50×10^{-1} (2.75×10^{-1})	B
3-01-035-20	Lead Chromate	None	1.30×10^{-1} (6.50×10^{-2})	B

Source: Reference 12

[a] Emission factors are expressed in lb (kg) of pollutant emitted per ton (Mg) of oxide/pigment produced.

6.4.2 Process Description

The manufacture of cured jacketed cables involves a stripping/remelt operation because an unalloyed lead cover that is applied in the vulcanizing treatment during the manufacture of rubber-insulated cable must be stripped from the cable and remelted. Lead coverings are applied to insulated cable by hydraulic or screw-type presses. Molten lead is continuously fed into the press, where it solidifies as it is extruded onto a cable.[174] Continuous extruders are the most prevalent means of producing lead-sheathed power cable. Continuous extruders have largely replaced the ramp-press equipment widely used prior to 1950.[176]

Extrusion rates for typical presses are 3,000 to 15,000 lb/hr (1.3 to 6.8 Mg/hr). A lead melting kettle supplies lead to the press, which is heated either electrically or with a combustion-type burner.

6.4.3 Emissions

The melting kettle is the only source of atmospheric lead emissions in lead sheathing production. Fumes from these kettles are exhausted to the atmosphere. Table 6-9 presents uncontrolled lead emission factors for cable covering.

Cable sheath reliability and quality relate directly to the oxide content of the sheath. Because of lead density, flotation of lead oxides from the melting and holding kettles used to feed the extruder is possible. To minimize introduction of oxygen into the lead bath, modern melting pots use pneumatically operated lids and splash prevention devices on the ingot loading mechanism.[176]

Further control is provided by controlling the height of the overflow channel from the melting pot to the holding pot by properly spacing the baffles to prevent oxide movement along the direction of metal flow and bottom tapping of the holding pot.[176]

Emissions data from facilities with any type of emission controls are scarce or unavailable. Also, the percentage of facilities having any type of controls in place is unknown.

Cable covering processes do not usually include particulate collection devices. However, fabric filters, scrubbers, or cyclones can be installed to reduce lead emissions at different control efficiency levels. Process modifications to minimize emissions include lowering and controlling the melt temperature, enclosing the melting unit, and using fluxes to provide a cover on the melt.

TABLE 6-9. LEAD EMISSION FACTOR FOR LEAD CABLE COATING

SCC Number	Process/Emission Source	Control Device	Average Emission Factor lb/ton (kg/Mg)[a]	Emission Factor Range lb/ton (kg/Mg)[a]	Emission Factor Rating
3-04-040-01	Cable Covering	None	5.00×10^{-1} (2.50×10^{-1})	---	C

Source: Reference 57,174

[a] Emission factors are expressed in lb (kg) of lead emitted per ton (Mg) lead processed.

"---" means data are not available.

6.5 FRIT MANUFACTURING

Frit is a homogeneous melted mixture of inorganic materials that is used in enameling iron and steel and in glazing porcelain and pottery. Frit renders soluble and hazardous compounds (such as lead) inert by combining them with silica and other oxides. Frit also is used in bonding grinding wheels, to lower vitrification temperatures, and as a lubricant in steel casting and metal extrusion.[177]

6.5.1 Process Description

Frit is prepared by fusing a variety of minerals in a furnace and then rapidly quenching the molten material. The constituents of the feed material depend on whether the frit is to be used as a ground coat or as a cover coat. For cover coats, the primary constituents of the raw material charge include silica, fluorspar, soda ash, borax, feldspar, zircon, aluminum oxide, lithium carbonate, magnesium carbonate, and titanium oxide. The constituents of the charge for a ground coat include the same compounds plus smaller amounts of metal oxides such as cobalt oxide, nickel oxide, copper oxide, and manganese oxide.[177]

To begin the process, raw materials are shipped to the manufacturing facility by truck or rail and are stored in bins. Next, the raw materials are carefully weighed in the correct proportions. The raw batch is then dry mixed and transferred to a hopper prior to being fed into the smelting furnace. Although pot furnaces, hearth furnaces, and rotary furnaces have been used to produce frit in batch operations, most frit is now produced in continuous smelting furnaces. Depending on the application, frit smelting furnaces operate at temperatures of 1700° to 2700°F (930° to 1480°C). If a continuous furnace is used, the mixed charge is fed by screw conveyor directly into the furnace. Continuous furnaces operate at temperatures of 2000° to 2600°F (1090° to 1430°C). When smelting is complete, the molten material is passed between water-cooled metal rollers that limit the thickness of the material, and then it is quenched with a water spray that shatters the material into small glass particles called frit.[177]

After quenching, the frit is milled by either wet or dry grinding. If the latter, the frit is dried before grinding. Frit produced in continuous furnaces generally can be ground without drying, and it is sometimes packaged for shipping without further processing. Wet milling of frit is no longer common. However, if the frit is wet-milled, it can be charged directly to the grinding mill without drying. Rotary dryers are the devices most commonly used for drying frit. Drying tables and stationary dryers also have been used. After drying, magnetic separation may be used to remove iron-bearing material. The frit is finely ground in a ball mill, into which clays and other electrolytes may be added, and then the product is screened and stored. The frit product then is transported to on-site ceramic manufacturing processes or is prepared for shipping. In recent years, the electrostatic deposition spray method has become the preferred method of applying frit glaze to surfaces. Frit that is to be applied in that manner is mixed during the grinding step with an organic silicon encapsulating agent, rather than with clay and electrolytes. Glaze application to ceramics is discussed in more detail in Section 6.6. Figure 6-5 presents a process flow diagram for frit manufacturing.[177]

6.5.2 Emissions

When frit containing lead oxides is being manufactured, lead emissions are created by the frit smelting operation in the form of dust and fumes. These emissions consist primarily of condensed lead oxide fumes that have volatilized from the molten charge.[177]

Lead emissions from the furnace can be minimized by careful control of the rate and duration of raw material heating, to prevent volatilization of the more fusible charge materials. Lead emissions from rotary furnaces also can be reduced with careful control of the rotation speed, to prevent excessive dust carryover. Venturi scrubbers and fabric filters are the devices most commonly used to control emissions from frit smelting furnaces, and fabric filters are commonly used to control emissions from grinding operations. No information is available on the type of emission controls used on quenching, drying, and materials handling and transfer operations.[177] Also, no lead emission factors for frit manufacturing were identified.

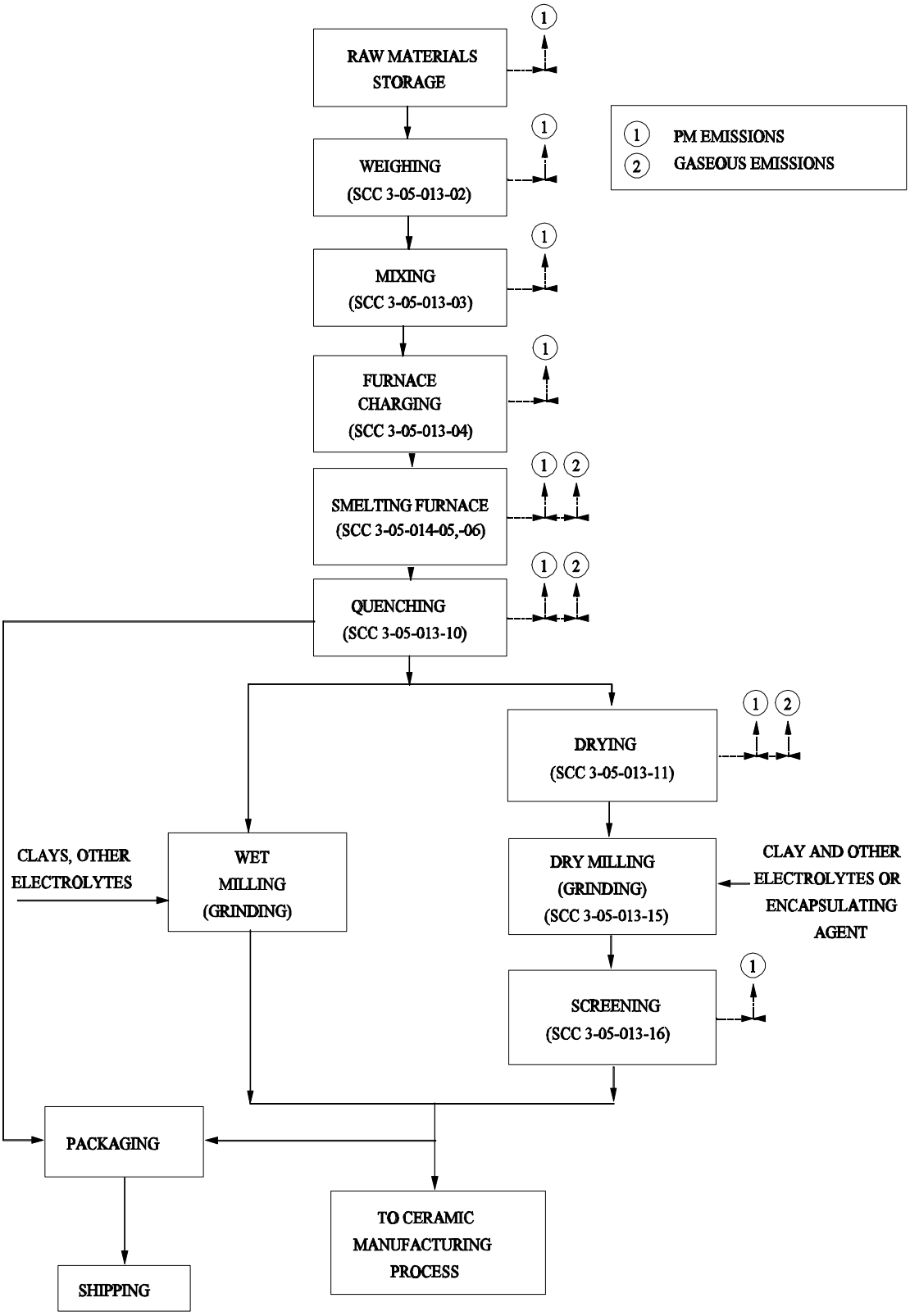

Figure 6-5. Process Flow Diagram for Frit Manufacturing

6.6 CERAMICS AND GLAZES

Glazes are applied to clay-based ceramic products to provide a shiny, generally smooth surface and to seal the clay.[178] Adding lead to glazes dramatically improves their chemical durability and heightens color, helping them to withstand detergent attack. Lead gives a smooth, durable hygienic surface that resists scratching. Lead also allows the glaze to be melted and fluxed easily. Lead increases the strength of the bond between glaze and substrate.[179]

Basic carbonate white lead [$2PbCO_3 \bullet Pb(OH)_2$] has been the preferred leaded glaze used in ceramic manufacture for hundreds of years. White lead has varied applications in whiteware glazes, particularly for fine china and commercial artware. White lead has a small particle size and lower particle density, making it capable of suspending a glaze without the presence of clays or organic binders. However, white lead and other lead oxides are more soluble than other forms of lead, and because the lead leaches out over time, they are being phased out by the ceramic industry.[14]

The ceramics industry is addressing this solubility problem by adding lead to glaze in frit form. The frit is a ground mixture of two or more compounds. For example, lead monosilcate ($PbO \bullet 0.67SiO_2$), which is considered one of the most economical methods for introducing lead into a glaze, contains 85 percent PbO and 15 percent SiO_2. The frit form desolubilizes and detoxifies the lead compounds. The frit also allows the glazes to be fired at lower temperatures and creates a more uniform glaze. The fritted glaze usually includes clay or organic binders, which ensure that the glaze adheres to the ceramic and does not dust off prior to firing.[14] Frits are usually manufactured by frit manufacturers rather than ceramic manufacturers. (See Section 6.3 for a list of frit manufacturers.)

Since the 1970s, attention has been focused on the use of lead glazes in china dishes and the tendency for lead from the glaze to leach into food. This tendency toward leachability depends upon several factors, including glaze composition, firing conditions, pH (e.g., orange, tomato juices, vinegar), temperature, and physical state of food (liquid, moist), duration of food contact.

The following presents a brief history of the regulatory drivers influencing lead reduction in ceramics. The U.S. Food and Drug Administration (FDA) set informal guidelines in 1971 for levels of lead leaching from ceramic products. These levels were tightened in 1979. They are now being further reduced because new information shows that lead can pose health hazards. The guideline levels for lead leaching from ceramic waste are being reduced as follows:

- From 7.0 to 3.0 ppm for plates, saucers, and other flatware;
- From 5.0 to 2.0 ppm for small hollowware, such as cereal bowls (but not cups and mugs);
- From 5.0 to 0.5 ppm, for cups and mugs;
- From 2.5 to 1.0 ppm for large (greater than 1.1 liters) hollowware such as bowls (but not pitchers).[180]

These guideline levels for ceramics are expected to reduce lead emissions from ceramic manufacturers. However, the leaded glaze content of certain non-food ceramic products (such as tiles) is not expected to be affected. A list of ceramicware manufacturers in the United States is presented in Table 6-10; a list of ceramic tile manufacturers in the United States is presented in Table 6-11.

In addition to lead in ceramic glazes, metal cookware is often enameled because of the heat resistance, ease of cleaning, permanent color, and corrosion resistance of enamel. Typical enamel compositions for aluminum cookware contain 35 to 42 percent lead monoxide.[14] A list of manufacturers of enamels for stove and range use is presented in Table 6-12.

A breakout of U.S. consumption of lead specific to ceramic products is not available. However, total consumption of lead oxides in glass and ceramic products and paint was estimated at 59 tons (53 Mg) in 1992.[50]

TABLE 6-10. MANUFACTURERS OF CERAMICWARE

Facility	Location
Bennington Potters, Inc	Bennington, VT
Buffalo China, Inc.[a]	Buffalo, NY
Burden China Co., Inc.	El Monte, CA
Ebaz Systems, Inc.	Williamsburg, VA
Frankoma Pottery[a]	Sapulpa, OK
Haeger Potteries, Inc.[a]	Dundee, IL
Homer Laughlin China Co.	Newell, WV
Innovative Ceramic Corporation	East Liverpool, OH
Kingwood Ceramic, Inc.	East Palestine, OH
Lenox Inc.[b]	Pomona, NJ Kinston, NC
Mayer China Co.	Beaver Falls, PA
Nelson McCoy Ceramic Co.	Roseville, OH
Pewabic Pottery	Detroit, MI
Sterling China Co.[c]	Wellsville, OH
Syracuse China Corporation	Syracuse, NY

Source: Reference 181

[a] Listed in the 1992 TRI under SIC code 3269 (Pottery Products, NEC). Source Reference 159
[b] Listed in the 1992 TRI under SIC code 3262 (Vitreous China Table & Kitchenware). Source Reference 159.
[c] Listed in the 1992 TRI without an SIC code. Source Reference 159.

TABLE 6-11. DECORATIVE CERAMIC TILE MANUFACTURERS

Facility	Location
Acme Brick Co.	Fort Worth, TX
American Olean Tile Co., Inc.[a]/Dal-Tile Corporation[b]	Lansdale, PA
Dal-Tile Corporation	Dallas Texas
Florida Tile[b]	Lakeland, FL
Monarch Tile[b]	Florence, AL
American Marazzi[b]	Sunnyvale, TX
Bennington Potters, Inc.	Bennington, VT
Lone Star Ceramics Co.	Dallas, TX
Mannington Ceramic Tile, Inc.	Lexington, NC
Metropolitan Ceramics, Inc.	Canton, OH
Pewabic Pottery	Detroit, MI
Stark Ceramics, Inc.[c]	East Canton, OH
Winburn Tile Manufacturing Co.	Little Rock, AR

Source: Reference 181.

[a] Listed in the 1992 TRI under SIC code 3253 (Ceramic Wall and Floor Tile) with reported lead compound emissions of 2 lb/yr. Source Reference 159.
[b] Source: Reference 184
[c] Listed in the 1992 TRI under SIC code 3251 (Brick and Structural Clay Tile). Source Reference 159.

TABLE 6-12. MANUFACTURERS OF ENAMELS FOR STOVE AND RANGE USE

Facility	Location
A.O. Smith, Protective Coatings Division	Florence, KY
Randolph Products Co.	Carlstadt, NJ
Schenectady Chemicals	Schenectady, NY
Ferro Corporation, Frit Division	Cleveland, OH
Chit-Vit Corporation	Urbana, OH
Sterling Group	Sewickley, PA

Source: Reference 183

6.6.1 Process Description

Prior to glaze application, the frit and other glaze materials are ground in a ball mill until they reach a particular size distribution that will permit uniform application, but not so fine that the lead exceeds solubility standards.[14]

Leaded glaze is applied to ceramics either by spraying or dipping.[178] Spraying is probably the most common method of glaze application in the ceramic industry. Various types of automatic glaze sprayers have been developed. These sprayers may be circular or a straight conveyor line. They are generally capable of rotating the ware and have multiple spray guns, which can be oriented according to the item being sprayed, allowing even application of glaze thickness.[14]

Dipping is an older process for glaze application, and is generally used only on shapes that are not conducive to spraying. Flat surfaces (such as wall tile) can be glazed using a waterfall technique--passing the tiles under a thin falling sheet of glaze.[14]

6.6.2 Emissions

When leaded glazes are used, lead is emitted during the glaze spraying phase. One uncontrolled emission factor for lead measured from a spray booth stack during ceramic glaze spraying is presented in Table 6-13. The glaze being used during this test contained 28.3 weight percent lead monosilicate. The test was conducted using combined EPA Methods 5 and 12 sampling trains.[184] Although no lead emission factors were identified for other steps in the ceramic process, lead emissions can also occur during the firing of glazes.[185] Two emission control options frequently used at ceramic kilns are (1) the limestone gravel-bed filter, and (2) dry scrubbing.[185]

Because of the special properties that lead imparts to ceramic glazes, it will continue to be used in the ceramic industry. However, work is continuing in the United States to identify ways to lower the lead solubilities of commercial ceramic frits.[14]

6.6.3 Piezoelectric Ceramics

Lead-based ceramics are reported to be "critically important" to the electronics industry. These are piezoelectric materials, which are used to convert mechanical to electrical energy. Currently, the most widely used piezoelectric ceramic is lead zirconate titanate (PZT). Some of the applications for piezoelectric ceramics include igniters for gas appliances, cigarette lighters, remote control of appliances, tone generators, and electronic displays. These ceramics contain 60 to 64 percent lead (65 to 69 percent lead oxide).[14] Multilayer ceramic capacitors are becoming more widely used in electronic circuits, especially with the trend toward miniaturization and surface-mount technology.[186] A list of PZT manufacturers as well as manufacturers using PZT in electronic applications is presented in Table 6-14.

TABLE 6-13. LEAD EMISSION FACTOR FOR CERAMIC/GLAZE APPLICATION

SCC Number	Emission Source	Control Device	Average Emission Factor in lb/ton (kg/Mg)[a]	Emission Factor Rating
3-09-060-01	Ceramic Glaze Spraying - Spray Booth	None	3.0 (1.5)	B

Source: Reference 184

[a] Emission factors are expressed in lb (kg) of pollutant emitted per ton (Mg) of ceramic glaze applied.

TABLE 6-14. MANUFACTURERS OF LEAD ZIRCONATE TITANATE (PZT) AND MANUFACTURERS OF PIEZOELECTRONICS

Facility	Location
American Piezo Ceramics, Inc.	Mackeyville, PA
Bullen Ultrasonics, Inc.	Eaton, OH
Cerac Inc.	Milwaukee, WI
Channel Products, Inc.	Chesterland, OH
Channel Technologies, Inc.	Santa Barbara, CA
Edo Corp., Electro Ceramic Division[a]	Salt Lake City, UT
Enprotech Corporation	Pittsburgh, PA
Hoechst CeramTec North America, Inc.	Mansfield, MA
International Transducer, Inc.	Santa Barbara, CA
Materials Research & Analysis (MRA) Laboratories, Inc.	North Adams, MA
Motorola, Inc. Ceramics Products[a]	Albuquerque, NM
NTK Technical Ceramics	Springfield, NJ
	Mesa, AZ
Piezo Kinetics, Inc.	Bellefonte, PA
Radio Materials Corporation	Attica, IN
Tam Ceramics, Inc.	Niagara Falls, NY
Ultran Labs, Inc.	State College, PA
Ultrasonic Powders, Inc.	South Plainfield, NJ
Vernitron Corp., Piezoelectric Division	Cleveland, OH

Source: Reference 181

[a] Listed in the 1992 TRI under SIC code 3679 (Electronic Components, NEC). Source: Reference 159.

Process Description

The process for manufacturing a multilayer ceramic capacitor (MLCC) is shown in Figure 6-6. The process begins with casting a ceramic film on a removable substrate, such as a plastic film. When the film is dry, it is punched into squares, and multiple internal electrode patterns are screened onto it. These films are then stacked and laminated by applying heat and pressure to form a green MLCC bar. This bar is cut into individual MLCC chips and then fired. End termination electrodes are applied by dip-coating both ends of the chip and firing at 1472°F (800°C) to connect the internal electrodes.[186]

Emissions

Lead emissions are expected to occur during PZT manufacture, handling of raw materials, casting, and ceramic firing. Because these PZT ceramics require no glazing, lead emissions are expected to be much lower than those from manufacture of ceramics and decorative tiles. No lead emission factors were identified for PZT ceramic manufacturers.

6.7 MISCELLANEOUS LEAD PRODUCTS

The following categories (in decreasing order of lead usage) are the most significant sources of lead emissions in the miscellaneous lead products group: ammunition, type metal, and other metallic lead products (including bearing metals, and pipe and sheet lead). Since 1992, U.S. can manufacturers no longer use lead solder. Also, the EPA has recently proposed a regulation under the Toxic Substances Control Act to prohibit the manufacture of lead-containing fishing sinkers.[187] Therefore, neither can solder nor fishing sinkers are included as miscellaneous lead products in this section. Also, information on abrasive grain processing is included in this section. Available information indicates that this process is likely to emit metals (including lead) as constituents of the feed material.

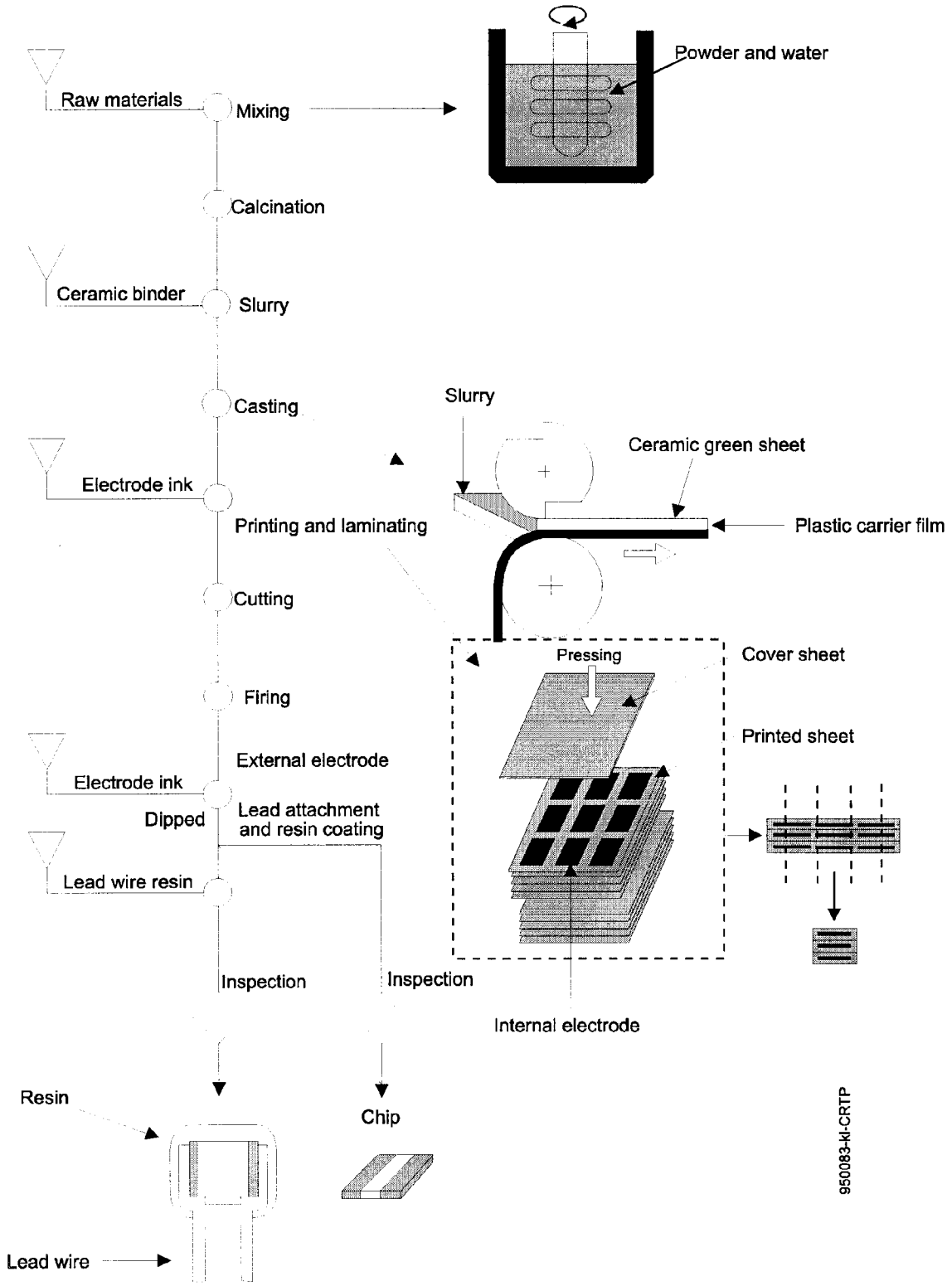

Figure 6-6. Multilayer Ceramic Capacitor Manufacturing Process

6.7.1 Ammunition

Lead is consumed and emitted in the manufacture of ammunition. Approximately 58,000 tons of lead were consumed for ammunition production in 1996.[175] Lead used in the manufacture of ammunition is processed by melting and alloying before it is cast, sheared, extruded, swaged, or mechanically worked in the production of lead shot or lead-filled ammunition. Some lead is also reacted to form lead azide or lead styphnate, a detonating agent.

Emissions

A lead emission factor for ammunition production is presented in Table 6-15. The emission factor represents a manufacturing scenario where little or no air pollution control equipment was used. Lead emissions from ammunition manufacturing are controlled by fabric filters, wet scrubbers and/or cyclone separators, depending on the manufacturing situation.[188]

A total of 206 facilities manufacturing small arms ammunition (Standard Industrial Classification - 3482) nationwide were identified as being potential sources of lead emissions.[189]

There is not enough evidence to indicate that large weapons manufacturing facilities (Standard Industrial Classification - 3483) emit significant amounts of lead.[189]

6.7.2 Type Metal Production

Lead type has been used primarily in the letterpress segment of the printing industry. However, in the late 1980s, the printing industry started phasing out the use of lead type. The use of lead type has decreased in the last few years, but still continues to be used at some facilities. Lead typemaking processes are classified according to the methods of producing the final product: linotype, monotype, and stereotype. Because type metal is recycled many times before it is spent, the quantity of type metal actually processed in a particular year can not be calculated.

TABLE 6-15. LEAD EMISSION FACTORS FOR MISCELLANEOUS LEAD PRODUCTS

SCC Number	Process/Emission Source	Control Device	Average Emission Factor in lb/ton (kg/Mg)	Emission Factor Range in lb/ton (kg/Mg)	Emission Factor Rating	Reference
3-04-051-01	Ammunition	None	<1.0 ($<5.0 \times 10^{-1}$)	---	C	57,174
3-04-051-02	Bearing Metals	None	Negligible	---	C	57,174
3-04-051-03	Other Metallic Lead Processes	None	1.5 (7.5×10^{-1})	---	C	57,174
3-05-035-05	Abrasive Grain Processing/Washing/Drying	Wet Scrubber	4.4×10^{-3} (2.2×10^{-3})	---	E	190

"---" means data are not available.
Based on 1973 data.

Process Description

Linotype and monotype processes produce a mold; the stereotype process produces a plate. All three processes are closed-cycle. The type is cast from a molten lead alloy and then remelted after printing. A small amount of virgin metal is added periodically to the melting pot to adjust the alloy and meet make-up requirements.

All type metal is an alloy consisting mainly of lead and much smaller amounts of antimony and tin. Each constituent provides a desired metallurgical characteristic for a slug (a solid bar with raised letters in a line) or other form of type-casting. Lead constitutes 60 to 85 percent of the type metal because it has a low melting point. Antimony lends hardness to the alloy and minimizes contraction as the metal cools. The antimony expands as the slug solidifies, providing a clear type face. Tin gives both strength and fluidity to the type metal and provides a smooth and even surface to the slug.

Emissions[174]

The melting pot is the major source of emissions in type metal production. Melting the dirty recycled type metal, contaminated with printing ink, paper, and other impurities, generates smoke that contains hydrocarbons as well as lead particulates. Only small quantities of particulates are created by the oxidation of lead after the meltdown because of the protection afforded by the layer of dross on the metal surface. Limited test data indicate that lead may comprise as much as 35 percent of the total amount of PM emitted.[191,192] Table 6-16 presents lead emission factors for type metal production.

The transferring and pouring of the molten metal into the molds may produce fuming because of surface oxidation of the metal. The trimming and finishing operations emit lead particles. However, the particles are typically large in size and tend to settle out in the vicinity of the trimming saws and finishing equipment.

TABLE 6-16. LEAD EMISSION FACTOR FOR TYPE METAL PRODUCTION

SCC Number	Emission Source	Control Device	Average Emission Factor in lb/ton (kg/Mg)[a]	Emission Factor Range in lb/ton (kg/Mg)[a]	Emission Factor Rating
3-06-001-01	Type Metal Production/ Remelting	[b]	2.5×10^{-1} (1.3×10^{-1})	---	C

Source: References 31,173,194

[a] Emission factor is expressed in lb (kg) of pollutant emitted per ton (Mg) of lead processed.
[b] The emission factor is an industry average. Typical control devices utilized by the industry are cyclones, wet scrubbers, fabric filters, and electrostatic precipitators, which may be used in various combinations.

"---" means data are not available.

The most frequently controlled sources at hot metal printing facilities are the main melting pots and drossing areas. Linotype melting pots and finishing equipment do not require emission controls when they are operated properly. Emission control devices in current use include wet scrubbers, baghouses, and electrostatic precipitators. These can be used in various combinations. During drossing, the enclosure doors are opened and pot emissions may enter the plant atmosphere unless vented to a control device or to the outside.

6.7.3 Other Metallic Lead Products

Lead is also consumed and emitted in the manufacture of other metallic lead products such as bearing metals, caulking lead, pipe and sheet lead, casting metals, solder, and terne metal. Lead is also used for galvanizing, annealing, and plating. Approximately 68,100 tons of lead were consumed in the manufacturing operations of these metallic lead products in 1991.[193]

Process Description

Lead is used in the manufacture of bearing metals by alloying it with copper, bronze, antimony, and tin to form various alloys. Bearings are used in electric motors, machines,

and engines. In the manufacturing of other metallic lead products, lead is usually processed by melting and casting, followed by mechanical forming operations.

Emissions

Table 6-15 presents a lead emission factor for manufacturing processes of miscellaneous metallic lead products. Uncontrolled emissions from bearing metals operations are considered negligible. There is little or no published information on control techniques or practices used for these sources.

6.7.4 Abrasive Grain Processing

Abrasive grain manufacturers produce materials for use by bonded and coated abrasive product manufacturers during production of abrasive products.

Process Description[190]

The most commonly used abrasive materials for abrasive grain manufacturing are silicon carbide and aluminum oxides. These synthetic materials account for as much as 80 to 90 percent of the abrasive grains produced domestically. Other materials used for abrasive grains are cubic boron nitride (CBN), synthetic diamonds, and several naturally occurring minerals such as garnet and emery. The use of garnet as an abrasive grain is decreasing. CBN is used for machining the hardest steels to precise forms and finishes. The largest application of synthetic diamonds has been in wheels for grinding carbides and ceramics. Natural diamonds are used primarily in diamond-tipped drill bits and saw blades for cutting or shaping rock, concrete, grinding wheels, glass, quartz, gems, and high-speed tool steels. Other naturally occurring abrasive materials (including garnet, emery, silica sand, and quartz) are used in finishing wood, leather, rubber, plastics, glass, and softer metals.

Silicon carbide is manufactured in a resistance arc furnace charged with a mixture of approximately 60 percent silica sand and 40 percent finely ground petroleum coke. A small

amount of sawdust is added to the mix to increase its porosity so that the CO formed during the process can escape freely. Common salt is added to the mix to promote the carbon-silicon reaction and remove impurities in the sand and coke. During the heating period, the furnace core reaches approximately 4,000°F (2,200°C), at which point a large portion of the load crystallizes. At the end of the run, the furnace contains a core of loosely knit silicon carbide crystals surrounded by unreacted or partially reacted raw materials. The silicon carbide crystals are removed to begin processing into abrasive grains.

Fused aluminum oxide is produced in pot-type electric arc furnaces with capacities of several tons. Before processing, bauxite, the crude raw material, is calcined at about 1,740°F (950°C) to remove both free and combined water. The bauxite is then mixed with ground coke (about 3 percent) and iron borings (about 2 percent). An electric current is applied and the intense heat, on the order of 3,700°F (2,000°C), melts the bauxite and reduces the impurities that settle to the bottom of the furnace. As the fusion process continues, more bauxite mixture is added until the furnace is full. The furnace is then emptied and the outer impure layer is stripped off. The core of aluminum oxide is then removed to be processed into abrasive grains.

CBN is synthesized in crystal form from hexagonal boron nitride, which is composed of atoms of boron and nitrogen. The hexagonal boron nitride is combined with a catalyst such as metallic lithium at temperatures in the range of 3,000°F (1,650°C) and pressures of up to 1,000,000 pounds per square inch (psi) (6,895,000 kilopascals [kPa]).

Synthetic diamond is manufactured by subjecting graphite in the presence of a metal catalyst to pressures in the range of 808,000 to 1,900,000 psi (5,571,000 to 13,100,000 kPa) at temperatures in the range of 2,500 to 4,500°F (1,400 to 2,500°C).

Figure 6-7 presents a process flow diagram for abrasive grain processing. Abrasive grains for both bonded and coated abrasive products are made by graded crushing and close sizing of either natural or synthetic abrasives. Raw abrasive materials first are crushed by primary crushers and then reduced by jaw crushers to manageable size, approximately

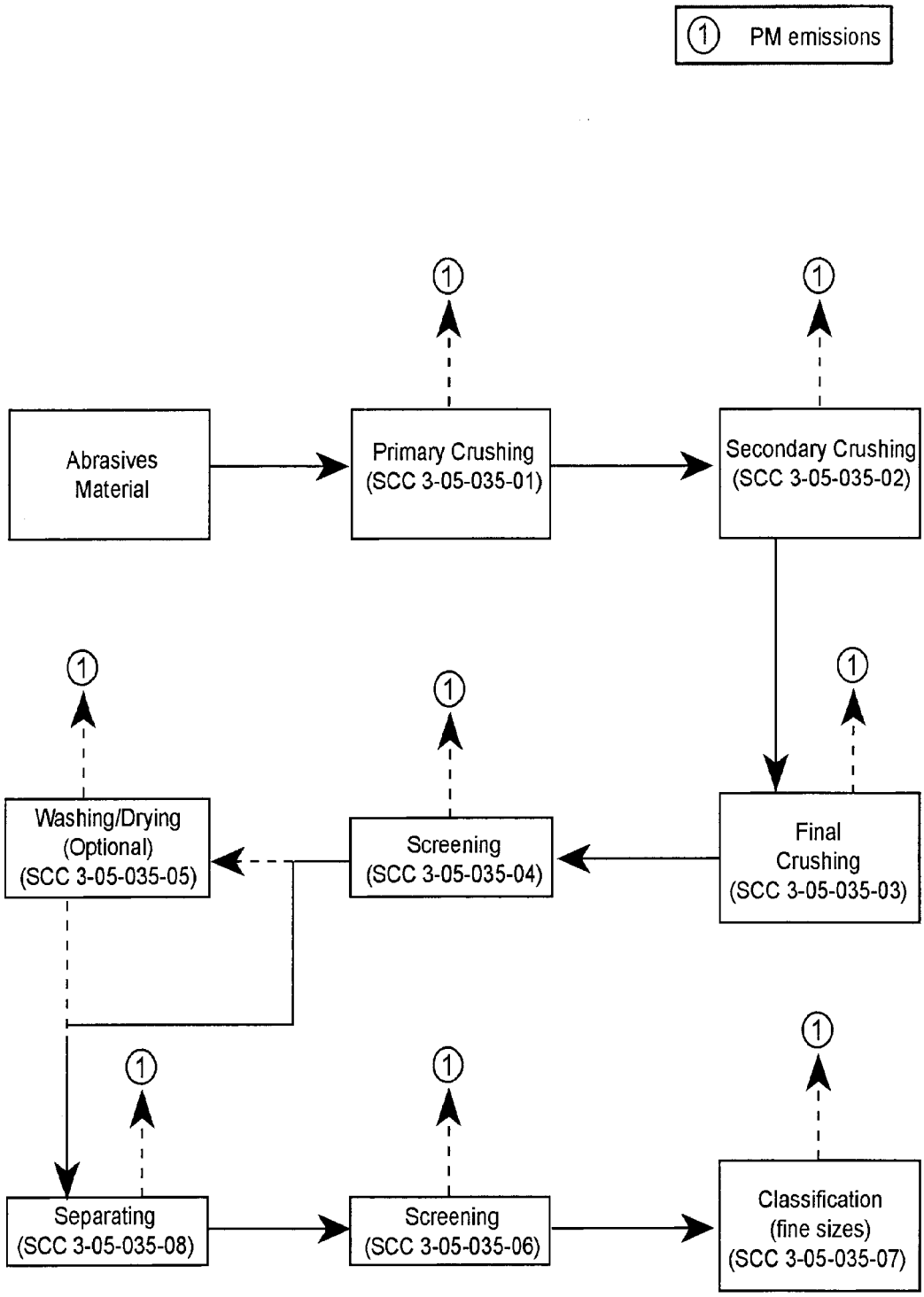

Figure 6-7. Flow Diagram for Abrasive Grain Processes

Source: Reference 190.

0.75 inches (in) (19 millimeters [mm]). Final crushing is usually accomplished with roll crushers that break up the small pieces into a usable range of sizes. The crushed abrasive grains are then separated into specific grade sizes by passing them over a series of screens. If necessary, the grains are washed in classifiers to remove slimes, dried, and passed through magnetic separators to remove iron-bearing material before they are again closely sized on screens. This careful sizing is necessary to prevent contamination of grades by coarser grains. Sizes finer than 250 grit (0.10 mm) are separated by hydraulic flotation and sedimentation or by air classification.

Emissions [190]

Little information is available on emissions from the manufacture of abrasive grains and products.

Emissions from the production of synthetic abrasive grains, such as aluminum oxide and silicon carbide, are likely to consist primarily of PM, PM_{10}, and CO from the furnaces. Aluminum oxide processing takes place in an electric arc furnace and involves temperatures up to 4,710°F (2,600°C) with raw materials of bauxite ore, silica, coke, iron borings, and a variety of minerals that include chromium oxide, cryolite, pyrite, and silane. This processing is likely to emit fluorides, sulfides, and metal constituents of the feed material.

The primary emissions from abrasive grain processing consist of PM and PM_{10} from the crushing, screening, classifying, and drying operations. PM is also emitted from materials handling and transfer operations. Table 6-15 presents a lead emission factor developed from the results of a metals analysis conducted on a rotary dryer controlled by a wet scrubber in an abrasive grain processing facility.

Fabric filters preceded by cyclones are used at some facilities to control PM emissions from abrasive grain production. This configuration of control devices can attain controlled emission concentrations of 37 micrograms per dry standard cubic meter (0.02 grains per dry standard cubic foot) and control efficiencies in excess of 99.9 percent. Little other information is available on the types of controls used by the abrasives industry to control PM

emissions. However, it is assumed that other conventional devices such as scrubbers and electrostatic precipitators can be used to control PM emissions from abrasives grain and products manufacturing.

6.8 SOLDER MANUFACTURING

6.8.1 Source Description

A small fraction of the total lead produced is transformed into solder. Lead content in solder can range from 0 to over 50 percent. Industrial trends are showing an increased demand for lead-free solder, partially in response to the June 1988 amendments to the Safe Drinking Water Act, which set limits of 0.02 percent lead in solders and fluxes and 8 percent lead in pipe and fittings used in public water supply systems and facilities connected to them. Lead used in soldered food and soft drink cans declined steadily through the 1980s. As of November 1991, cans made with lead-containing solder were no longer manufactured in the United States.[195]

In 1989, the solder manufacturing industry was comprised of 175 facilities involved in melting and realloying solder into ingots, extruding or stamping solder, and/or paste solder production. Lead emissions from the solder manufacturing industry are estimated as negligible.[196]

6.8.2 Process Description

Lead and tin pigs are melted and blended in a kettle. The alloy is cast into billets in the slug molds and put into a press, where it is hydraulically extruded at 15,000 psi through holes 1/2 inch in diameter. The solder is wire-spooled and put through a drawing machine to produce threads of varying diameters. After extrusion, wire stock can go to the rolling mills (rather than being spooled), where it is formed into a solder ribbon from which washers are stamped.[197]

Paste solder is produced by alloying various amounts of tin and lead or silver or lead oxide. The alloy is put into a powder form by centrifuging or spraying. The solder powder is mixed with a vehicle (water-based or other solvents plus additional ingredients).[197]

The main processes of solder manufacturing--melting and paste solder production--are similar to the melting phase and paste production, respectively, in lead-acid battery production. Refer to Section 6.2 for the process description of lead-acid battery production.[196]

6.8.3 Emissions

Studies conducted by EPA concluded that the solder manufacturing industry is a minimal source of lead emissions. This research identified two areas of solder manufacturing as potential sources of lead emissions, the lead melting process and solder paste production. Lead emissions from these sources occur by the same mechanism as lead emissions from lead-acid battery production, but the amount of lead released is expected to be much less because of the lower lead content of the alloy produced by solder manufacturing. Uncontrolled lead emissions from paste solder production are estimated to be small because the size and density of the particles have settling velocities sufficient to prevent migration to the atmosphere.[196]

Lead emissions from solder manufacturing facilities are estimated to be decreasing because of a higher demand for lead-free solder. Many solder producers are substituting tin/antimony or tin/antimony/silver solders for the previously manufactured lead solders. Table 6-17 presents a controlled emission factor that was developed from emissions test data.

Lead will generally be emitted in particulate form from solder manufacturing facilities. Therefore, control devices effective for PM removal include fabric filters and scrubbers. Refer to Section 6.2.3 for a more detailed description of devices used to control emissions from lead-acid battery facilities, which are similar in process to solder manufacturing facilities.

TABLE 6-17. LEAD EMISSION FACTOR FOR SOLDER MANUFACTURING FACILITIES

SCC Number	Emission Source	Control Device	Average Emission Factor in lb/ton (kg/Mg)[a]	Emission Factor Range in lb/ton (kg/Mg)[a]	Emission Factor Rating
3-04-004-14	Lead Melting Pot	Afterburner/ Scrubber	4.6×10^{-2} (2.3×10^{-2})	---	D

Source: Reference 198

[a] Emission factors are expressed in lb (kg) of lead emitted per ton (Mg) of materials processed.

"---" means data are not available.

6.9 ELECTROPLATING (INCLUDING PRINTED CIRCUIT BOARDS)

6.9.1 Source Description

Electroplating is used to coat base materials with lead or to act as a means of soldering printed circuit boards. With advances in the electronics industry creating complex parts, the use of electroplating has grown dramatically. Currently, electroplating can easily and efficiently complete 30,000 or more connections on a single circuit board. Table 6-18 presents those companies that are involved with lead electroplating operations.

6.9.2 Process Description

A flow diagram for a typical electroplating process for the coating of parts other than printed circuit boards is presented in Figure 6-8. Prior to plating, the parts undergo a series of pretreatment steps to smooth the surface of the part and to remove any surface soil, grease, or oil. Pretreatment steps include polishing, grinding, and/or degreasing of the part to prepare for plating. The part being plated is rinsed after each step in the process to prevent carry-over of solution that may contaminate the baths used in successive process steps.

Polishing and grinding are performed to smooth the surface of the part. Degreasing is performed either by dipping the part in organic solvents or by vapor degreasing the

TABLE 6-18. LEAD ELECTROPLATING MANUFACTURERS

Company	Location
CP Chemicals Inc.	Fort Lee, NJ
CuTech Inc.	Hatfield, PA
Enthone-OMI Inc.	New Haven, CT
GSP Metals & Chemicals Corp.	Los Angeles, CA
General Chemical Corp.	Parsippany, NJ
Harstan Div., Chemtech Industries Inc.	St. Louis, MO
JacksonLea, A Unit of Jason Inc.	Conover, NC
LeaRonal Inc.	Freeport, NY
MacDermid Inc.	Waterbury, CT
Maclee Chemical Co., Inc.	Chicago, IL
McGean-Rohco Inc.	Cleveland, OH
Pitt Metals & Chemicals Inc.	McDonald, PA
Quin-Tec Inc.	Warren, MI
Shipley Co., Inc.	Newton, MA
Taskem Inc.	Brooklyn Heights, OH
Technic Inc.	Pawtucket, RI
Transene Co., Inc.	Rowley, MA

Source: Reference 199.

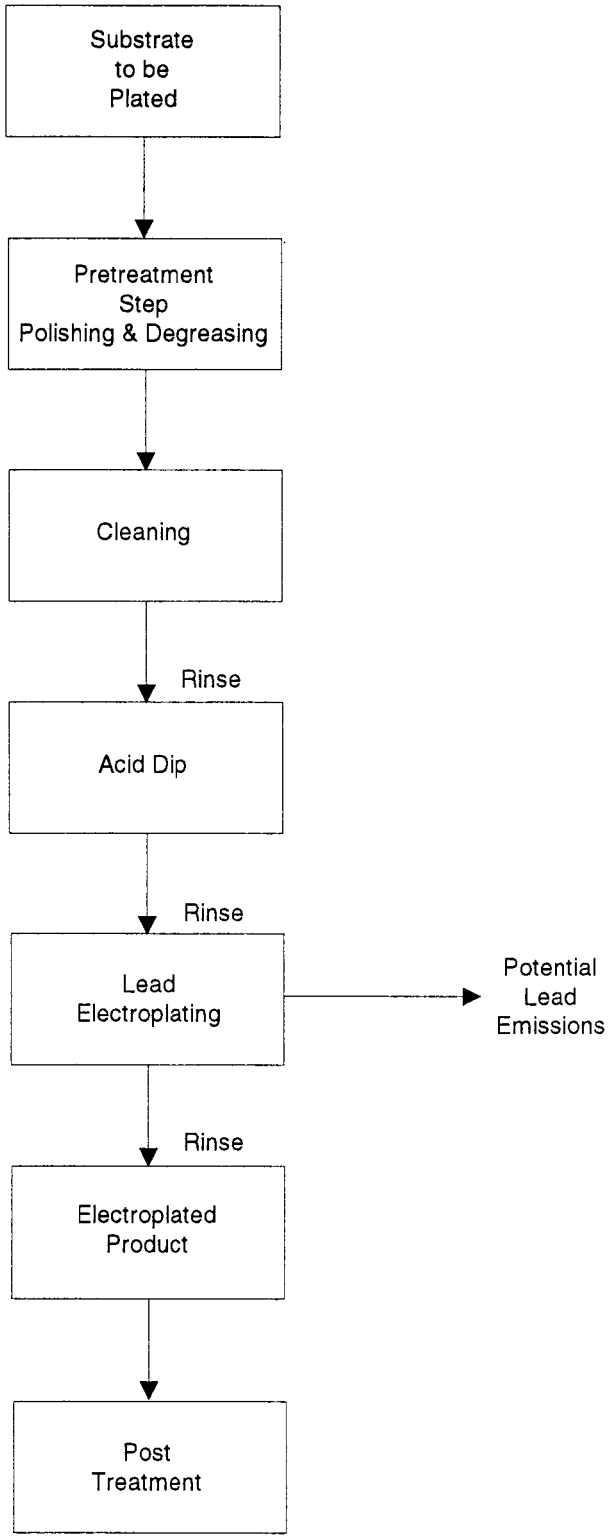

Figure 6-8. General Electroplating Process Flow Diagram

950200-kl-DRTP

Source: Reference 200.

part using organic solvents. The exact pretreatment steps used depend upon the amount of soil, grease, or oil on the parts. Following pretreatment, the parts are transferred to the plating tank.

In lead plating, the part(s) is placed in a tank and connected into the electrical circuit as the cathode. If small parts are to be plated, the parts are first placed in a plating barrel or on a plating rack. The plating barrel or plating rack is then placed in the tank and connected into the electrical circuit. As current is applied, lead ions in solution are drawn to the negatively charged cathode where they undergo reduction, resulting in the deposition of lead onto the part. The efficiency of the plating bath is based on the amount of current that is consumed in the deposition reaction versus the amount of current that is consumed by other side reactions.

Following plating, the part is thoroughly rinsed. Post-treatment of the part may be necessary.

Tin/lead solder is used in the production of circuit boards in two ways:

- Tin/lead solder is applied to the boards in the manufacturing process to protect the copper from etching during production and from oxidizing, allowing the circuit board to be stored for long periods of time.
- Tin/lead solder is used to attach components to the circuit board.

The American Electronics Association (AEA) advises that a major reason that tin/lead solder is used is because it is a conductive material that bonds aggressively. The low melting point of tin/lead solder is often preferred because of the reduced probability of thermal shock to soldered assemblies during high speed soldering operations. In addition to its ability to bond aggressively at a relatively low temperature, tin/lead solder has other advantageous physical properties, including: good wicking tendencies, i.e., the tendency to produce strong bonds by traveling up the holes to mount components to some printed circuit boards; pliancy to resist breakage from vibration; and good electrical conductivity.

Manufacturing circuit boards involves the application of tin/lead solder to maintain the circuit boards' solderability by protecting the copper boards from oxidizing. The oldest manufacturing technique employs the application of tin/lead plating to the circuit board. This process begins with a copper clad circuit board--a laminate such as fiberglass or epoxy that has been coated with copper on one or both sides. Tin/lead solder is used as a protective pattern of "etch resist," which is deposited on the copper surface, and the unwanted copper is etched away. This technique produces a copper clad circuit pattern protected by tin/lead plating.

Manufacturers of circuit boards now employ a solder-mask-over-bare copper technique that reduces the amount of solder needed in basic circuit board production. This technique is referred to as "hot air leveling." Using this technique, a solder mask, which is an organic coating such as epoxy, is applied to the bare copper board. The circuit board is then dipped into liquid tin/lead solder and forced air is used to blow excess solder back into the liquid solder (hence the term, "hot air leveling"). With this process, tin/lead solder is applied only to the joints where the components will be attached, which is about 25 percent of the exposed copper on the board, as compared to covering 100 percent of the exposed copper on the board with the tin/lead plating method.

Both tin/lead plating and hot air leveling are presently in use in the electronics manufacturing industry; however, a comparison of the frequency of use of each process is not available.

In both types of manufacturing, additional solder is applied to the circuit boards to attach the components. The soldering process is defined as a metallurgical joining method using a filler metal (the solder) with a melting point below 600°F (316°C). According to AEA, the most common soldering technique for both printed circuit board manufacturing and electronic component assembling is wave soldering. This process employs a bath of solder through which the circuit boards pass. In the assembly operations, automated equipment places electronic components on or in the printed circuit boards prior to soldering.

Surface mount assembly and through-hole assembly are two technologies used to attach electrical components to the circuit boards. With surface mount technology, components are attached directly to the circuit boards without drilling or punching holes. Without holes, the components can be densely packed on the board, thereby reducing the size of the board. Texas Instruments cites a 40 percent reduction in size of the printed circuit board assembly over through-hole technology when surface mount technology is used. With through-hole technology, the leads of the electrical components are placed in holes that have been drilled in the circuit board. Usually, the circuit board is soldered on the side from which the leads protrude.[201]

For the purposes of electroplating solder on printed circuit boards, stannous fluoborate, lead fluoborate, and fluoborate acid, in various proportions, can be used for plating all percentages of tin-lead (solder), 100 percent lead and 100 percent tin. The bath requires boric acid for stability and an addition agent, usually a liquid peptone or a non-protein liquid. The addition agent provides the following advantages: (a) the solution remains clear, (b) the grain structure of the deposit is improved, (c) the throwing power of the bath is improved, and (d) better rinsing is possible and drag-out is reduced.[202]

6.9.3 Emissions

Lead emissions potentially occur from the plating stage of the electroplating process. However, these emissions are estimated to be low.

6.10 STABILIZERS IN RESINS

Due to its excellent insulation properties, lead is used as a component of heat stabilizers in resins. Heat stabilizers prevent the thermal degradation of resins that are exposed to elevated temperatures or ultra-violet light and weathering during end use. Lead-containing stabilizers are usually lead salts of long-chain organic acids. Typical lead stabilizers include the following compounds:[203]

- Diabasic lead stearate $[3PbO \cdot PB(C_{17}H_{35}COO)_2]$,

- Hydrous tribasic lead sulfate ($3PbO \cdot PbSO_4H_2O$),
- Dibasic lead phthalate [$2PbOPb(OCO)_2C_6H_4$], and
- Dibasic lead phosphate ($2PbO \cdot PbHPO_3\sqrt{1/2H_2O}$).

These lead-containing stabilizers are used primarily in polyvinyl chloride (PVC), vinyl chloride copolymers, and PVC blends.[204] PVC is generally regarded as one of the most versatile of polymers because of its compatibility with many other materials, such as plasticizers, fillers, and other polymers. A list of manufacturers of heat stabilizers containing lead is presented in Table 6-19.

The major use of lead-stabilized PVC is in construction applications with a long life--for cable jacketing, conduits, and other building applications (such as siding, rainwater-resistant products, window framing, and general trim).[158] Lead-stabilized PVC is also used for various types of piping and fittings, including larger diameter drain and sewer pipe.[205,206]

Other likely applications of lead-stabilized PVC include consumer products (such as appliance housings, sporting and recreational items, footwear, luggage, credit/bank cards, floppy disk jackets, window shades, blinds and awnings, industrial and garden hoses) and transportation applications (such as automobile upholstery and tops).[205]

Demand for lead stabilizers in plastics increased steadily during the 1980s due to increased demand for PVC products related to construction activity.[206] Since that time, demand has remained relatively stable. In the 1992 Toxic Release Inventory, there were 53 facilities reporting lead and lead compound emissions from the manufacture of resins and plastics.[159] These facilities are listed in Table 6-20 and probably represent some of the major lead-stabilized resin and plastic manufacturers in the United States.

Products used in residential and commercial construction currently account for 70 percent of all PVC sold.[206] Because lead is primarily used as a heat-stabilizer in these products, a list of PVC manufacturers in the United States is presented in Table 6-21.

TABLE 6-19. MANUFACTURERS OF HEAT STABILIZERS CONTAINING LEAD[a]

Facility	Location
Akzo Chemical Division	New Brunswick, NJ
Hammond Lead Products, Halsted Division	Hammond, IN
Mooney Chemicals, Inc.	Cleveland, OH
M-R-S Chemicals Inc.	Maryland Heights, MO
Synthetic Products Co.	Cleveland, OH
RT Vanderbilt Co., Inc.	Norwalk, CT

Source: Reference 207.

[a] Includes dibasic lead phthalate, dibasic lead phosphite, and tribasic lead sulphate.

Due to increasing pressure from state and federal agencies, U.S. manufacturers of heavy-metal heat stabilizers (including lead) are focusing research and development on finding an acceptable alternative. Some of these replacement heat stabilizers under development include magnesium-zinc, barium-zinc, and tin stabilizers.[208]

6.10.1 Process Description

Lead stabilizer production can be a highly variable process because many of the stabilizers are custom-blended for specific applications. Probably the most commonly used lead stabilizer is tribasic lead sulfate, a fine white powder that is made by boiling aqueous suspensions of lead oxide and lead sulfate. The anhydrous compound decomposes at 1,643°F (895°C). The addition of 2 to 7 percent tribasic lead sulfate to flexible and rigid PVC provides efficient, long-term, economical heat stability.[209]

Addition of the heat stabilizer additives occurs as part of the overall production of the formulated PVC resins. Formulation of the resin normally uses a blender system and, depending upon the particular PVC product, may be a batch or continuous operation.

TABLE 6-20. MANUFACTURERS OF RESINS AND PLASTICS REPORTING LEAD AND LEAD COMPOUND EMISSIONS IN THE 1992 TOXIC CHEMICALS RELEASE INVENTORY

Facility	Location
SIC 2821: Plastics Materials and Resins	
Ampacet Corporation	Deridder, LA
BF Goodrich Company, Geovinyl Division	Pedricktown, NJ
BF Goodrich Company	Louisville, KY Avon Lake, OH
North American Plastics Inc.	Madison, MS Prairie, MS
Synergistics Inc.	Howell Township, NJ
Union Carbide Chemicals and Plastics	Texas City, TX
Vista Chemical Company, Polymers Division	Aberdeen, MS
SIC 3089: Plastics Products	
American Wire & Cable Company	Olmsted Township, OH
Conex of Georgia Inc.	Greensboro, GA
KW Plastics of California	Bakersfield, CA
Lancer Dispersions Inc.	Akron, OH
RIMTEC Corporation	Burlington, NJ
WITCO Richardson Battery Parts	Philadelphia, MS
WITCO Corporation, Richardson Battery	Indianapolis, IN
SIC 3087: Custom Compound Purchased Resins	
Allied Products Corporation Coz Division	Northbridge, MA
Crown Wire & Cable Company	Taunton, MA
Gary Chemical Corporation	Leominster, MA
Heller Performance Polymers Inc.	Visalia, CA
KW Plastics	Troy, AL
Lynn Plastics Corporation	Lynn, MA

TABLE 6-20. MANUFACTURERS OF RESINS AND PLASTICS REPORTING LEAD AND LEAD COMPOUND EMISSIONS IN THE 1992 TOXIC CHEMICALS RELEASE INVENTORY (CONTINUED)

Facility	Location
Manner Plastic Materials Inc.	Rancho Dominguez, CA
Pantasote Inc., Plastic & Materials, Vinyl Compounds	Passaic, NJ
Plastics Color Chip Inc.	Asheboro, NC
PMS Consolidated	Somerset, NJ Elk Grove Village, IL Saint Peters, MO
Reed Plastics Corporation, Sandoz	Holden, MA Grand Prairie, TX
Spectra Polymer Company Inc.	Ashburnham, MA
Teknor Color Company	Henderson, KY
Teknor Apex Company	Pawtucket, RI
Vista Performance Polymers	Mansfield, MA Jeffersontown, KY
SIC 3079: Miscellaneous Plastics Products	
PVC Compounders, Inc.	Kendallville, IN
SIC 3081: Unsupported Plastic Films & Sheet	
Gencorp Polymer Products - Rigid Plastics Division	Newcomerstown, OH

Source: Reference 159.

TABLE 6-21. POLYVINYL CHLORIDE MANUFACTURERS IN THE UNITED STATES

Facility	Location	Capacity (millions of lb)
Borden Chemicals and Plastics Partnership	Geismar, LA	500
	Illiopolis, IL	350
CertainTeed Corporation	Lake Charles, LA	260
Formosa Plastics Corporation U.S.A.	Baton Rouge, LA	865
	Delaware City, DE	130
	Point Comfort, TX	1,050
The BFGoodrich Company, BFGoodrich Chemical Group	Avon Lake, OH	300
	Deer Park, TX	325
	Henry, IL	60
	Louisville, KY	400
	Pedricktown, NJ	370
Georgia Gulf Corporation	Delaware City, DE	150
	Plaquemine, NJ	840
The Goodyear Tire & Rubber Company, General Products Division	Niagara Falls, NY	115
Keysor-Century Corporation	Saugus, CA	60
Occidental Chemical Corporation, Polymers & Plastics, Vinyls Division	Baton Rouge, LA	450
	Burlington, NJ (south)	150
	Pottstown, PA	250
	Pasadena, TX	1,400
Shintech Incorporated	Freeport, TX	2,400
Union Carbide Corporation, Solvents & Coatings Materials Division	Texas City, TX	140
Vista Chemical Company, Olefins & Vinyl Division	Aberdeen, MS	440
	Oklahoma City, OK	400
Vygen Corporation	Ashatbula, OH	125
Westlake PVC Corporation	Pensacola, FL	200
Total		12,030

Source: Reference 169, 206.

The primary process used to manufacture lead-stabilized PVC in the United Sates is suspension polymerization. In this process, the vinyl chloride monomer is finely dispersed in water with vigorous agitation. At this point, monomer-soluble initiators and lead stabilizers in suspension are used. The particular sequence of stabilizer addition depends upon the processing method to be used (e.g., calendaring, extrusion, injection molding). The molecular weight of the PVC can be controlled by varying the temperature, where the molecular weight increases as the temperature increases.[206]

6.10.2 Emissions

No information is available for the specific types of emission control devices used to control lead emissions resulting from production of lead stabilizers or lead-containing PVC products. One potential source of lead emissions is materials handling, especially since lead stabilizers are used in powder form. Lead emissions may occur when lead stabilizers are added to the PVC resins during formulation and prior to processing the PVC resin.

Lead emissions may also be present during subsequent phases: drying, extruding, molding, grinding, weighing, packaging. However, emissions from these sources are expected to be minimal since temperatures necessary to volatilize significant quantities of lead compounds would thermally destroy the resin and other organic constituents.

No emission factors are published for this process, and no test data are available to allow calculation of an emission factor.

6.11 ASPHALT CONCRETE

6.11.1 Source Location

In 1983, there were approximately 2,150 companies operating an estimated 4,500 hot-mix asphalt plants in the United States.[210] More recently, the number has fallen to about 3,600 plants.[211] Approximately 40 percent of these companies operate only a single plant.

Plants are usually located near the job site, so they are concentrated in areas with an extensive highway and road network.[210] Additional information on the location of individual hot-mix asphalt facilities can be obtained by contacting the National Asphalt Pavement Association in College Park, Maryland.

6.11.2 Process Description

To produce hot-mix asphalt (also referred to as asphalt concrete), aggregate, which is composed of gravel, sand, and mineral filler, is heated to eliminate moisture and then mixed with hot asphalt cement. The resulting hot mixture is pliable and can be compacted and smoothed. When it cools and hardens, hot-mix asphalt provides a waterproof and durable pavement for roads, driveways, parking lots, and runways.

There are three types of hot-mix asphalt plants operating in the United States: batch-mix, continuous-mix, and drum-mix. Batch-mix and continuous-mix plants separate the aggregate drying process from the mixing of aggregate with asphalt cement. Drum-mix plants combine these two processes. Production capacities for all three types of plants range from 40 to 600 tons (36 to 544 Mg) of hot mix per hour. Almost all plants in operation are of either the batch-mix or drum-mix type. Less than 0.5 percent of operating hot-mix plants are of the continuous-mix design.[211]

Aggregate, the basic raw material of hot-mix asphalt, consists of any hard, inert mineral material. Aggregate typically comprises between 90 and 95 percent by weight of the asphalt mixture. Because aggregate provides most of the load-bearing properties of a pavement, the performance of the pavement depends on selection of the proper aggregate.

Asphalt cement is used as the binding agent for aggregate. It prevents moisture from penetrating the aggregate and acts as a cushioning agent. Typically, asphalt cement constitutes 4 to 6 percent by weight of a hot-mix asphalt mixture.[210] Asphalt cement is obtained from the distillation of crude oil. It is classified into grades under one of three systems. The most

commonly used system classifies asphalt cement based on its viscosity at 140°F (60°C). The more viscous the asphalt cement, the higher its numerical rating.

The asphalt cement grade selected for different hot-mix asphalts depends on the type of pavement, climate, and type and amount of traffic expected. Generally, asphalt pavement bearing heavy traffic in warm climates requires a harder asphalt cement than pavement subject to either light traffic or cold climate conditions.

Another material used significantly in the production of new or virgin hot-mix asphalt is recycled asphalt pavement (RAP), which is pavement material that has been removed from existing roadways. RAP is now used by virtually all companies in their hot-mix asphalt mixtures. The Surface Transportation Assistance Act of 1982 encourages recycling by providing a 5-percent increase in Federal funds to State agencies that recycle asphalt pavement. Rarely does the RAP comprise more than 60 percent by weight of the new asphalt mixture. Twenty-five percent RAP is typical in batch plants, and 40 to 50 percent RAP mixtures are typical in drum-mix plants.[210]

The primary processes of a typical batch-mix hot-mix asphalt facility are illustrated in Figure 6-9.[211] The moisture content of the stockpiled aggregate at the plant usually ranges from 3 to 5 percent. The moisture content of recycled hot-mix asphalt typically ranges from 2 to 3 percent. The different sizes of aggregate are typically transported by front-end loader to separate cold-feed bins and metered onto a feeder conveyor belt through gates at the bottom of the bins. The aggregate is screened before it is fed to the dryer to keep oversize material out of the mix.

The screened aggregate is then fed to a rotating dryer with a burner at its lower (discharge) end that is fired with fuel oil, natural gas, or propane. In the production of hot-mix asphalt, the majority of lead emissions can be expected from the rotating dryer. The dryer removes moisture from the aggregate and heats the aggregate to the proper mix temperature. Lead emissions occur primarily from fuel combustion. Aggregate temperature at the discharge end of the dryer is about 300°F (149°C). The amount of aggregate that a dryer can heat depends

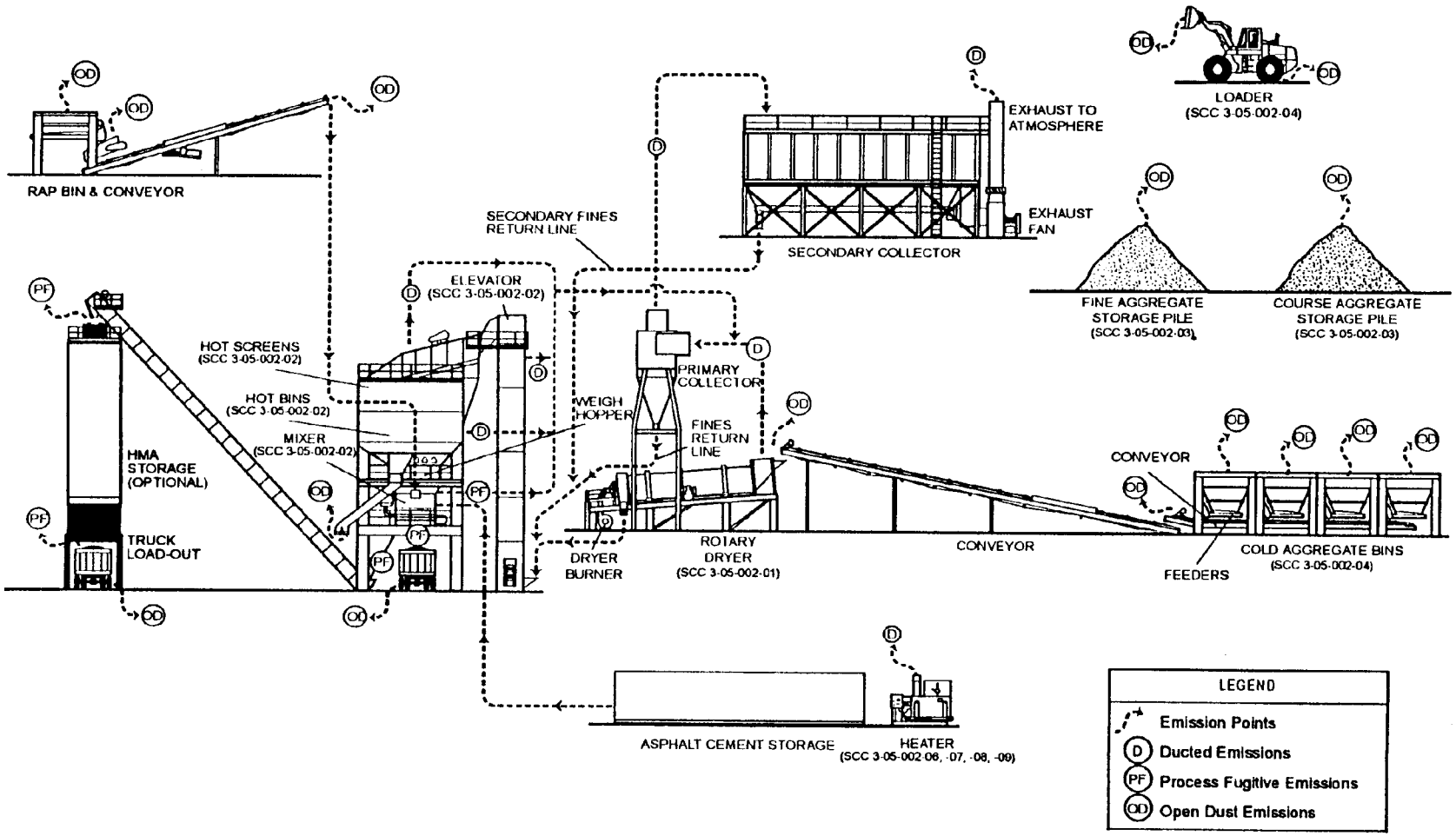

Figure 6-9. General Process Flow Diagram for Batch-Mix Asphalt Paving Plants

Source: Reference 211.

on the size of the drum, the size of the burner, and the moisture content of the aggregate. As the amount of moisture to be removed from the aggregate increases, the effective production capacity of the dryer decreases.

Vibrating screens segregate the heated aggregate into bins according to size. A weigh hopper meters the desired amount of the various sizes of aggregate into a pugmill mixer. The pugmill typically mixes the aggregate for 15 seconds before hot asphalt cement from a heated tank is sprayed into the pugmill. The pugmill thoroughly mixes the aggregate and hot asphalt cement for 25 to 60 seconds. The finished hot-mix asphalt is either loaded directly into trucks or held in insulated and/or heated storage silos. Depending on the production specifications, the temperature of the hot-mix asphalt product mix can range from 225 to 350°F (107 to 177°C) at the end of the production process.

Continuous-mix plants are very similar in configuration to batch plants. Asphalt cement is continuously added to the aggregate at the inlet of the mixer. The aggregate and asphalt cement are mixed by the action of rotating paddles while being conveyed through the mixer. An adjustable dam at the outlet end of the mixer regulates the mixing time and also provides some surge capacity. The finished mix is transported by a conveyor belt to either a storage silo or surge bin.[210]

Drum-mix plants dry the aggregate and mix it with the asphalt cement in the same drum, eliminating the need for the extra conveyor belt, hot bins and screens, weigh hopper, and pugmill of batch-mix plants. The drum of a drum-mix plant is much like the dryer of a batch plant, but it typically has more flights than do batch dryers to increase veiling of the aggregate and to improve overall heat transfer. The burner in a drum-mix plant emits a much bushier flame than does the burner in a batch plant. The bushier flame is designed to provide earlier and greater exposure of the virgin aggregate to the heat of the flame. This design also protects the asphalt cement, which is injected away from the direct heat of the flame.[210]

Initially, drum-mix plants were designed to be parallel-flow, as depicted in Figure 6-10. Recently, the counterflow drum-mix plant design shown in Figure 6-11 has become

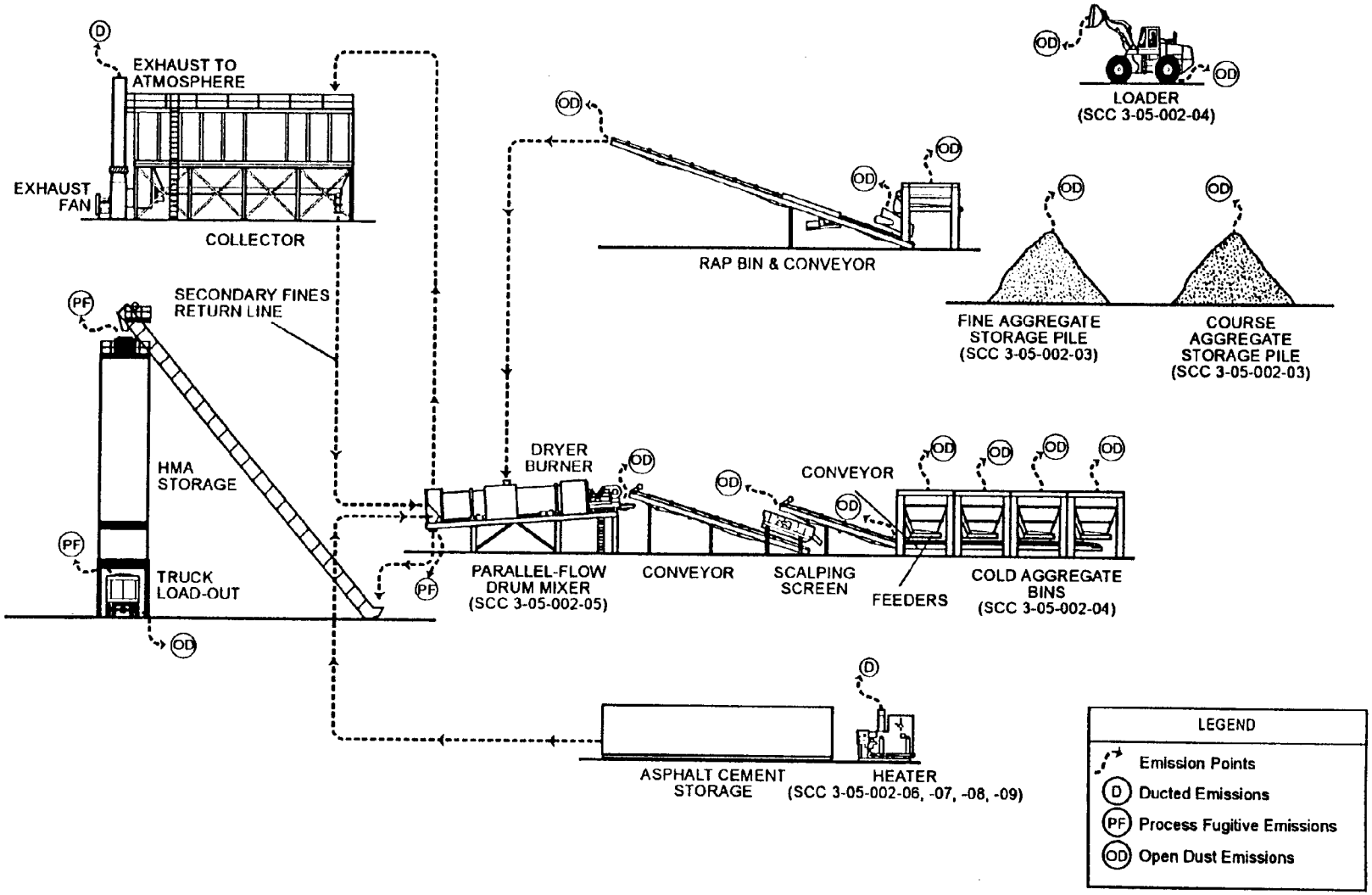

Figure 6-10. General Process Flow Diagram for Drum-Mix Asphalt Paving Plants

Source: Reference 211.

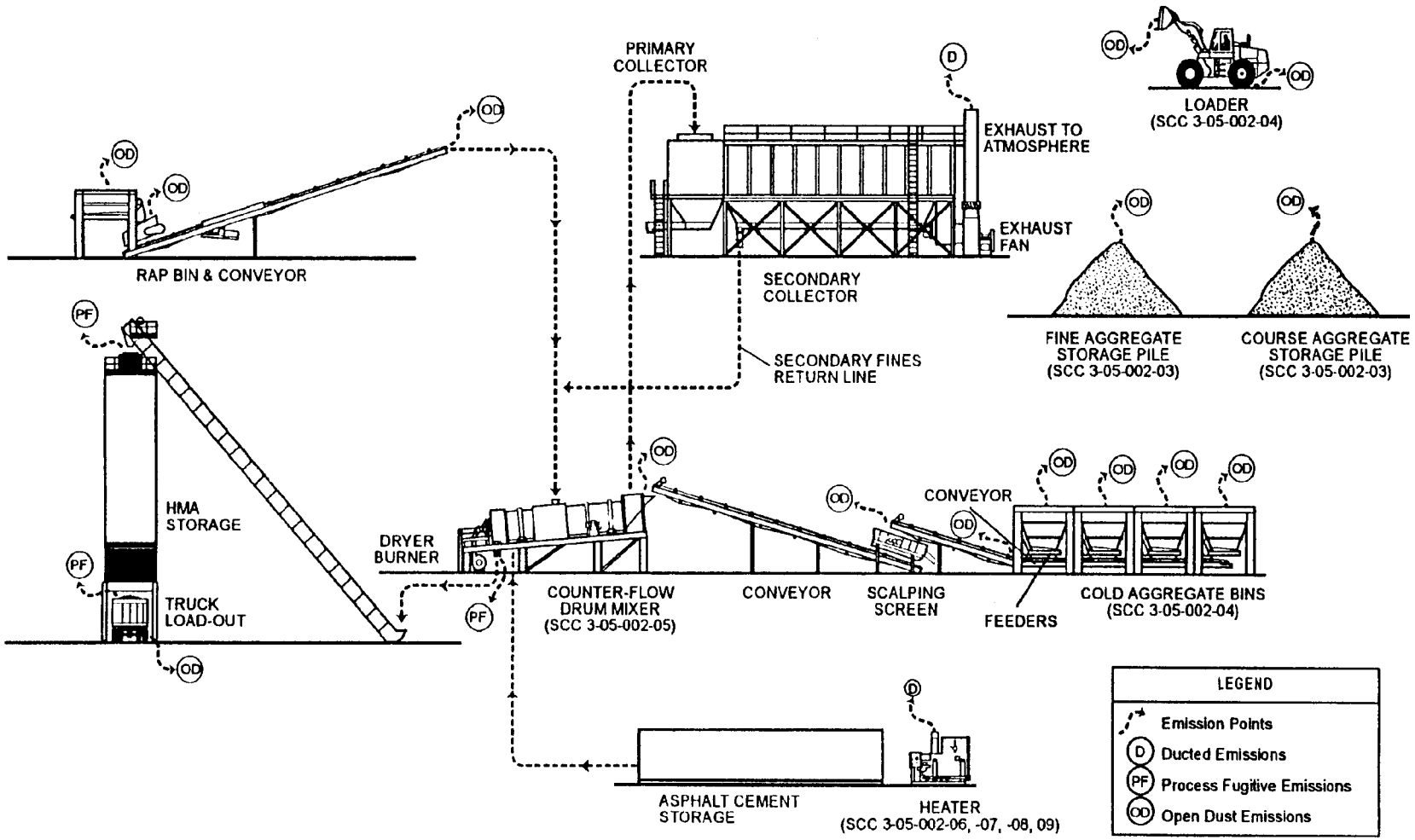

Figure 6-11. General Process Flow Diagram for Counterflow Drum-Mix Asphalt Paving Plants

Source: Reference 211.

popular.[211] The parallel flow drum-mix process is a continuous-mixing type process using proportioning cold feed controls for the process materials. Aggregate, which has been proportioned by gradations, is introduced to the drum at the burner end. As the drum rotates, the aggregates and the combustion products move toward the other end of the drum in parallel. Liquid asphalt cement flow is controlled by a variable flow pump that is electronically linked to the virgin aggregate and RAP weigh scales. The asphalt cement is introduced in the mixing zone midway down the drum in a lower temperature zone along with any RAP and PM from collectors. The mixture is discharged at the end of the drum and conveyed to a surge bin or storage silos. The exhaust gases also exit the end of the drum and pass on to the collection system.[211]

In a counterflow drum-mix plant, the material flow in the drum is opposite or counterflow to the direction of the exhaust gases. In addition, the liquid asphalt cement mixing zone is located behind the burner flame zone so as to remove the materials from direct contact with hot exhaust gases. Liquid asphalt cement flow is still controlled by a variable flow pump and is injected into the mixing zone along with any RAP and PM from primary and secondary collectors.[211]

Of the 3,600 active hot-mix asphalt plants in the United States, approximately 2,300 are batch-mix plants, 1,000 are parallel-flow drum-mix plants, and 300 are counterflow drum-mix plants. About 85 percent of plants being constructed today are of the counterflow drum-mix design; batch-mix plants and parallel-flow drum-mix plants account for 10 percent and 5 percent respectively.[211]

Emission Control Techniques

Emissions of lead from hot-mix asphalt plants most likely occur because of fuel combustion in the aggregate rotary dryers, but some emissions from the aggregate during the drying process are possible. These emissions are most often controlled by wet scrubbers or baghouses.[211]

6.11.3 Emissions

Emissions from hot-mix asphalt plants were reexamined recently for the purpose of updating the information contained in the EPA's *Compilation of Air Pollutant Emission Factors*, commonly referred to as AP-42. Representative batch-mix and drum-mix plants (both parallel and counterflow) were selected for testing. Emissions from hot-oil heaters used to warm stored asphalt concrete were also evaluated. Lead emissions from hot-mix plants can result from fuel combustion, aggregate mixing and drying, and asphalt heating. The only lead emissions found from these tests were from the drying process. These lead emission factors are provided in Tables 6-22 and 6-23.[212]

6.12 APPLICATION OF PAINTS

Leaded house paints were common up until the mid-1950s. In 1971, the Lead-Based Paint Poisoning Prevention Act prohibited the use of paints containing more than 1 percent lead by weight in the nonvolatile portion of liquid paints or in the dried film on all interior and exterior surfaces accessible to children in residential structures. In 1972, the FDA ordered a reduction of the lead content of paints used in and around households to 0.5 percent in 1973 and 0.06 percent in 1975. Further legislation in 1976 required the Department of Housing and Urban Development to prohibit lead-based paint in residential structures built or rehabilitated with federal assistance. Also, the Department of Health, Education, and Welfare banned lead paints from cooking and eating utensils, and the Consumer Products Safety Commission prohibited lead paints on toys and furniture. As a result, the use of white lead in paints for these consumer applications has plummeted in recent years.[213]

Although the use of lead paint has dramatically decreased in these consumer products, leaded paint is still used in certain applications. The major uses of lead-based paints today are as metal primers in automobile refinishing, as anti-corrosive undercoating in the automobile industry, for public works applications (such as bridges and roads), as traffic paint, in art materials, and in marine applications (such as boats and buoys).[213,217]

TABLE 6-22. LEAD EMISSION FACTORS FOR BATCH-MIX HOT-MIX ASPHALT PLANTS

SCC Number	Emission Source	Control Device	Average Emission Factor in lb/ton (kg/Mg)[a]	Emission Factor Range in lb/ton (kg/Mg)[a]	Emission Factor Rating	Reference
3-05-002-01	Rotary Dryer	FF	7.4×10^{-7} (3.7×10^{-7})	---	D	212
		Wet Scrubber - Medium Efficiency	3.10×10^{-6} (1.55×10^{-6})	$<2.30 \times 10^{-6}$ - 3.9×10^{-6} ($<1.15 \times 10^{-6}$ - 1.95×10^{-6})	U	214
		Wet Scrubber - Medium Efficiency/Single Cyclone	1.03×10^{-6} (5.15×10^{-7})	6.80×10^{-7} - 1.24×10^{-6} (3.40×10^{-7} - 6.20×10^{-7})	U	215
		Single Cyclone/Baghouse	2.00×10^{-6} (1.00×10^{-6})	1.08×10^{-6} - 2.77×10^{-6} (5.40×10^{-7} - 1.39×10^{-6})	U	216
		Multiple Cyclone without Fly Ash Reinjection/Baghouse	2.08×10^{-7} (1.04×10^{-7})	3.74×10^{-7} - 4.10×10^{-6} (1.87×10^{-7} - 2.05×10^{-6})	U	92
		None	4.0 (2.0)	---	U	22

[a] Emission factors are expressed in lb (kg) of pollutant emitted per ton (Mg) of waste incinerated.

"---" means data are not available.

FF = Fabric Filter.

TABLE 6-23. LEAD EMISSION FACTOR FOR DRUM-MIX HOT-MIX ASPHALT PLANTS

SCC Number	Emission Source	Control Device	Average Emission Factor in lb/ton (kg/Mg)[a]	Emission Factor Range in lb/ton (kg/Mg)[a]	Emission Factor Rating
3-05-002-05	Drum Dryer	FF	3.30×10^{-6} (1.70×10^{-6})	---	D

Source: Reference 212.

[a] Emission factors are expressed in lb (kg) of pollutant emitted per ton (Mg) of hot mix asphalt produced.

"---" means data are not available.

FF = Fabric Filter.

The future trend for the paint industry is to identify substitutes for the lead compounds currently being used. However, there is no perfect substitute that can impart all of the properties of lead, which include color, brightness, cost effectiveness, insolubility, opacity, nonbleeding in solvents, and durability. At present, substitutes of acceptable quality exist for only some of these uses.[217] The major current uses of lead-based paints are discussed briefly below.

6.12.1 Source Description

Automotive Industry and Automobile Refinishing

Because lead enhances the corrosion protection and durability of surface coatings, products such as paints and primers containing lead are frequently used to coat autobody surfaces and in automobile refinishing shops.[218] White-basic lead silicochromate is used in the electrodeposition of water-based coatings for the automotive industry. Its use in this application has increased because of its capability to be tinted to a variety of colors.[213]

Industrial Applications

Red lead is used as a rust-inhibitive pigment in paints for structural steel, such as bridges and support beams.[213] Basic lead silicochromate, which can be thinned with either solvent or water, is also used for its excellent anti-corrosive properties in industrial and maintenance paints.[13] The use of lead as an anti-corrosive in steel primers is decreasing because of containment costs required for application/removal. In certain applications, titanium oxide (TiO_2) is being substituted for lead.[217]

Machinery Finishes/Traffic Paints

Lead chromates are added to paints because they are inexpensive and provide durability in exterior applications. Chrome orange is used in machinery finishes, such as farm equipment and trucks. Chrome yellow is used in traffic paints--for highway stripes and markings, as well as curb markings, guard railings, and crosswalks. The pigment constitutes 25 percent of the total weight of the paint.[213] In 1990, about 40 million pounds of lead chromate were produced in the United States, and an additional 8 million pounds were imported.[219]

Artists Paints

Oil colors contain large amounts of pigment, ranging from 30 percent for toners to as high as 80 percent with dense pigments such as white leads.[213]

Marine Coatings

Anti-corrosive coatings are also used for marine applications, such as ship hulls, buoys, and offshore towers. Red lead has been used extensively for this purpose; however, zinc dust has largely replaced red lead. Basic lead silicochromate is also being used for corrosion protection.[213]

6.12.2 Process Description

For some of the categories discussed above, paint is applied using a surface coating operation (such as automobiles, farm machinery, buoys, boats). For other categories, the paint is applied (either by spraying or brushing) directly on the structure or item once it has been erected (such as bridges, beams, marine towers, curbs, roads). Because the variety of applications is so diverse, detailed process descriptions are not included in this document.

Industrial surface coating operations use several different methods to apply coatings to substrates. The type of surface coating operation used will depend upon the type of product being coated, coating requirements, and the method of application. The more commonly used techniques include electrodeposition (EDP), spraying, dipping, flow coating, and brushing.

In the automobile industry, EDP is used to apply anti-corrosion lead-based paints to the underbody of vehicles. In EDP, a dc voltage is applied between the coating bath (or carbon or stainless-steel electrodes in the bath) and the part to be coated. The part (acting as either the cathode or anode) is dipped into the bath. The coating particles in the bath are attracted to the part because they have an opposite charge. The result is a very evenly applied coating. The coatings used in EDP are waterbased. Transfer efficiencies for this process are generally greater than 95 percent.[220]

Spraying operations are normally performed in a spray booth using one of the following spray application methods: air atomization; airless atomization; air-assisted airless; high-volume, low pressure (HVLP); and electrostatic methods. All of these techniques are used in automobile refinishing. Air atomization is also used to apply traffic markings.[220]

Dip coating involves briefly immersing the substrate in a tank containing a bath of paint. The object is slowly removed from the tank allowing excess paint to drain back into the tank. Flow coating is used on articles which cannot be dipped due to their buoyancy. In this operation, the coating material is fed through overhead nozzles, distributing the paint in a steady

stream over the article to be coated. Excess paint is allowed to drain from the coated object and is then recycled.[220]

6.12.3 Emissions

Lead emissions from paint application occur as the paint is applied--during spraying, brushing, or dipping. Lead emissions may also occur from the paint blending tank or during the drying and curing operations. Lead would be emitted as PM. Equipment used to control PM emissions from spray booth operations include baffle plates, filter pads, or water curtains.[220]

No specific emission factors for lead were identified for any of the paint application source categories.

6.13 SHOOTING RANGES AND EXPLOSIVE ORDNANCE DISPOSAL SITES

6.13.1 Source Description

This section presents information on two potential lead-emitting sources: shooting ranges and explosive ordnance disposal (EOD) sites. Shooting ranges include indoor firing ranges and gun clubs. Many shooting ranges nationwide were identified as being potential sources of lead emissions.[221,222]

Various materials and explosives are regularly destroyed at ordnance disposal sites within military facilities. These facilities use open burn/open detonation (OB/OD) treatment processes to eliminate the hazardous properties of reactive waste munitions. As materials are combusted or exploded during the OB/OD treatment processes, chemical byproducts of incomplete combustion are emitted into the atmosphere.

6.13.2 Emissions

Lead is emitted from the firing of small arms ammunition with lead projectiles and/or lead primers, but the explosive charge does not contribute to lead emissions.

Indoor shooting ranges may expose firing personnel to lead during indoor shooting practices and qualification exercises. OSHA regulations may apply to indoor range situations. Ventilation systems at indoor shooting ranges should be designed with enough air flow from the firing line toward the target area to effectively remove the airborne lead generated during firing of conventional ammunition. New bullet traps are also available to reduce lead exposure generated from trap impact.

Lead emissions from small arms can be reduced by using different ammunition types and/or special leadfree primers. The Department of Defense and ammunition manufacturers are undertaking an R&D effort to develop lead free ammunition. Zinc bismuth, tungsten, nickel and plastic (among other items) are being considered as potential alternatives. None are currently available for widespread use and most are being considered for practice ammunition only. No emission factors were available for indoor shooting activities.[223]

In general, EOD processes generate relatively small quantities of pollutants. Chemical emission rates from an OB/OD event depend on the quantity and type of propellant treated and the method of treatment. Emissions originate either from the combustion or detonation of the propellant and primer material or nonenergetic waste (i.e., containers and other waste associated with the propellant) or vaporization of the nonenergetic waste (i.e., casings surrounding the propellant) during combustion. The list of propellant wastes to potentially be treated at an OB/OD facility is fairly extensive.

Table 6-24 presents lead emission factors for various categories of propellants. All emission factors are in gram emitted per gram of material burned or detonated. Each type of propellant represents a fairly different material. TNT represents a specific type of explosive. The double-based and composite-based propellants are nitroglycerin- and nitrocellulose-based

TABLE 6-24. UNCONTROLLED LEAD EMISSION FACTORS FOR EOD ACTIVITIES

Propellant Tested	Uncontrolled Average Emission Factor lb emitted/lb detonated (g emitted/g detonated)	Uncontrolled Emission Factor Range lb emitted/lb detonated (g emitted/g detonated)	Emission Factor Rating	Reference
TNT	4.1×10^{-4} (4.1×10^{-4})	---	U	221
Double-based Propellant (DB)	1.3×10^{-2} (1.3×10^{-2})	---	U	222
Composite-based Propellant (CB)	9.4×10^{-5} (9.4×10^{-5})	---	U	222
20-mm High-explosive Incendiary Cartridges	1.8×10^{-3} (1.8×10^{-3})	---	U	222
40-mm High-explosive Cartridges	1.3×10^{-3} (1.3×10^{-3})	---	U	221
M18A1 Claymore Antipersonnel Mine	5.3×10^{-7} (5.3×10^{-7})	---	U	221
T45E7 Adapter-booster	7.7×10^{-4} (7.7×10^{-4})	---	U	221
PBAN-Ammonium Perchlorate Propellant	2.2×10^{-6} (2.2×10^{-6})	---	U	224
CTPB-Ammonium Perchlorate Propellant	2.3×10^{-6} (2.3×10^{-6})	---	U	224
PEG/PBAN	1.0×10^{-6} (1.0×10^{-6})	---	U	224

Note: SCC assignment is not applicable to this category.

"---" means data are not available.

PEP; the 20-mm high-explosive incendiary and 40-mm high-explosive rounds represent RDX (2,3,5-trinitro-1,3,5-trazine) propellants with a variety of binders and additives. The M18A1 Claymore mine is primarily comprised of C4 plastic explosive with a high RDX component. The T45E7 booster represents a tetryl-based explosive. Finally, the PBAN/CTPB/PEG propellants represent ammonium perchlorate and nitrate propellants with different types of binders and stabilizers.

6.14 RUBBER PRODUCTS

Lead compounds may be added to rubber products as pigments, fillers, activators, vulcanizers, curing additives, and plasticizers. In some cases, lead metal may be included in the rubber product, such as lead-sheathed hosing.[225]

Lead is used as a pigment for rubber products that require color differentiation or for aesthetic appeal. Some uses of lead as a pigment in rubber products include white wall tires and markings on sporting goods such as basketballs.[225] Sometimes lead chromates are used as pigments when bright yellow or orange colors are desired.[226] Recent interest has developed in eliminating the use of lead-based pigments. However, lead pigments have several desirable qualities that are difficult to match, including heat and light stability, and low formulation and processing costs.[226]

Lead compounds used as activators and vulcanizers in rubber product include litharge (lead oxide), lead peroxide, and lead stearate. Litharge is used as a vulcanizing agent for chloroprene and polyethylacrylate natural and synthetic rubber. As an activator, litharge accelerates the curing rate and scorch time of rubber and is often combined with other accelerators.[227] As an activator, litharge is used primarily in natural, styrene-butadiene, and nitrile rubbers. Red oxide and white lead are also used as activators. Table 6-25 lists some rubber products that may contain lead.[225]

According to the Department of Commerce, 1,650 tons (1,500 Mg) of lead were consumed by the rubber industry in 1990, with about 10 percent used for pigments. The majority of this lead was consumed in manufacturing lead sheathed hosing and for making molds for the

TABLE 6-25. END USES OF RUBBER THAT MAY CONTAIN LEAD

Tires	Tank linings
Inner tubes	High-voltage insulators
Cable coverings	Hose
Seals	Conveyor belts and belting
Automotive radiator and heating hosing	Gaskets
Footwear	Flexible bellows
Vehicle suspension and body supports	Piers and boat bumpers
Bridge bearings	Springs
Vibration insulators	Packaging
"O" rings	Rubber-coated fabric
Sealants	Mats and matting
Jar rings	Flooring
Miscellaneous sporting goods	Miscellaneous sundries

Source: Reference 225.

manufacturing process.[225] Table 6-26 lists rubber product manufacturing facilities reporting lead and lead compound emissions in the 1992 Toxic Release Inventory.

6.14.1 Process Description

An emulsion process is frequently used during the manufacture of rubber (such as styrene-butadiene rubber). In this process, scrubbed monomer is dispersed in water, and additives (such as litharge, which is used as an activator) are mixed during the polymerization stage. After the polymerization reaction is complete, the polymer emulsion is blended and stored as a finished latex for subsequent processing into end products.[228]

TABLE 6-26. RUBBER PRODUCT MANUFACTURING FACILITIES IN THE UNITED STATES REPORTING LEAD AND LEAD COMPOUND EMISSIONS IN 1992 UNDER SARA 313

Facility	Location
SIC 3069: Fabricated Rubber Products	
Ashtabula Rubber Company	Ashtabula, OH
Elastochem Inc.	Chardon, OH
Goodyear Tire & Rubber Company	Norfolk, NE
Kennedy Company, Inc.	Scottsboro, AL
Mach-I Compounding	Macedonia, OH
Polymerics Inc.	Cuyahoga Falls, OH
Rhein Chemie Corporation	Trenton, NJ
SIC 3052: Rubber & Plastics Hose & Belting	
Aeroquip Corporation	Mountain Home, AR Forest City, NC
Boston Industrial Products	Hohenwald, TN
Dayco Products Inc.	Ocala, FL Alliance, NE
Gates Rubber Company	Galesburg, IL Iola, KS
Rhein Chemie Corporation	Trenton, NJ
Uniroyal Goodrich Tire Company	Opelika, AL

Source: Reference 159.

6.14.2 Emissions

Although no emission factors for lead from rubber manufacturing were identified in the literature, lead emissions from this process are expected during the materials handling stage (especially since the additives are in particulate form) and while the additives are being combined with the monomers, catalysts, and other compounds during the polymerization step.

SECTION 7.0
EMISSIONS OF LEAD AND LEAD COMPOUNDS FROM MOBILE SOURCES

7.1 GENERAL

Elemental lead and lead alloys are used in the manufacture and operation of vehicles. For example, lead is used in connecting electrical components, and antimonial lead is used in bearings. The positive plate grids in automobile batteries are made of an alloy of lead, antimony, tin, arsenic, and copper. Lead is also an anticorrosive additive in automobile paint primers. Combining lead and tin produces an alloy referred to as turn or turnplate, which is used to make corrosion-resistant gas tanks.[229] Lead is also an additive in automotive plastics and is included in ceramic electrical components. Despite this widespread use of lead in vehicles, the largest source of lead emissions from vehicles is from fuel combustion.

Lead has been used in motor gasoline since the 1920s to boost octane and provide lubrication for intake and exhaust valves. The lead compounds function by decomposing in the combustion cycle to form metal oxide particles. The particles interrupt the hydrocarbon chain branching reactions that cause rapid combustion, known as "knock." Lead anti-knock compounds foiled 1970 catalytic converter technologies developed to reduce hydrocarbon, carbon monoxide, and nitrogen oxide emissions. This led to the development of lead-free fuel in the early 1970s.[230]

The 1970 Clean Air legislation permitted the regulation of fuel additives, established a schedule for reducing lead additives, and required automobile manufacturers to design and construct vehicles that could run on low-lead and unleaded fuel. The phase-down of leaded gasoline in highway motor vehicles began in 1973. Section 211(n) of the CAA prohibits

the manufacture of highway engines requiring leaded gasoline after 1992. In January 1992, remaining lead additives used in fuels were banned for use in on-road vehicles in California. The final deadline for the abolition of all lead-containing highway vehicle fuels was December 31, 1995.

The lead levels in leaded gasoline have been gradually reduced from the industrial average of 2.5 g lead/gal (0.66 g/L) leaded gasoline in the 1970s to 0.0002 g lead/gal (5.283×10^{-5} g/L) unleaded gasoline in 1991 (see Table 7-1). Since 1982, the majority of gasoline fuel sold for motor vehicles is lead-free. Currently, less than 1 percent of gasoline motor vehicle fuel is leaded (see Table 7-2). As of 1995, only one gasoline refinery continues to produce gasoline with lead additives.[231] The fuel that currently has the greatest lead content is aviation gasoline (2 to 4 g lead/gal [0.528 to 1.057 g/L]). The petroleum industry may continue to make and market gasoline produced with lead additives for non motor vehicle uses, including use as fuel in aircraft, racing cars, and non-road engines such as farm equipment engines and marine engines.[231] Diesel fuel is assumed to contain quantities of lead that are insignificant compared to gasoline fuel.[17,158]

7.1.1 Leaded Fuels

The two most common lead anti-knock additives are tetraethyl lead (TEL) and tetramethyl lead (TML). TEL and TML, both high in octane, lubricate intake and exhaust valves and help reduce engine knock.[230] In 1990, 93 percent of highway fuel lead additives were TEL, and the remaining 7 percent were TML. The composition and properties of TEL and TML are shown in Table 7-3.

The manufacture of TEL and TML compounds for use in gasoline was discontinued in the United States in May 1991.[232] The plants that manufactured alkylated lead compounds have been dismantled.[232,233,234] However, TEL is still manufactured in Canada and Europe and imported by a few companies in the United States to produce leaded gasoline.[232,235,236]

TABLE 7-1. LEAD CONTENT OF MOTOR VEHICLE FUELS

	Lead Content (g/gal)	
Year	Leaded	Unleaded
1974	2.07	0.014
1975	1.82	0.014
1976	2.02	0.014
1977	2.03	0.014
1978	1.76	0.010
1979	1.76	0.016
1980	1.33	0.0286
1981	1.01	0.009
1982	1.02	0.005
1983	0.83	0.003
1984	0.84	0.006
1985	0.59	0.002
1986	0.31	0.002
1987	0.15	0.001
1988	0.15	0.001
1989	0.002	0.002
1990	0.0004	0.0004
1991	0.0002	0.0003

Source: Reference 237.

TABLE 7-2. FUEL SALES

Year	Finished Motor Fuel (thousand barrels)		Aviation Gasoline
	Leaded	Unleaded	
1981	1,213,144	1,190,347	11,147
1982	1,142,590	1,243,032	9,306
1983	1,085,813	1,331,271	9,444
1984	990,051	1,459,410	8,692
1985	885,144	1,608,217	9,969
1986	795,697	1,771,738	11,673
1987	833,668	1,896,420	9,041
1988	490,805	2,194,340	9,705
1989	299,770	2,374,899	9,427
1990	140,571	2,500,170	8,910
1991	92,041	2,531,403	8,265
1992	38,502	2,621,411	8,133

Source: Reference 238.

The blend of TEL and TML used in motor vehicle fuel depends upon the grade of gasoline being produced. For regular gasolines (i.e., below about 93 RON [research octane number for all distillate fractions of the gasoline]), TEL is usually the preferred anti-knock additive. For premium gasolines where elevating RON is important, TEL is normally preferred for lead concentrations below 1.514 g lead/gal (0.40 g/L). Above this level, mixtures of TEL and TML may be more beneficial. For premium gasolines where MON (motor octane number--a guide to the anti-knock performance of a fuel under relatively severe driving conditions) is important, mixtures of TEL and TML are again likely to produce the best results. For premium gasolines where R100°C (research octane number of the fraction of gasoline distilled up to 100°C) is important, TML, or mixtures of TML with TEL, are likely to be most beneficial.[230]

Leaded fuels also contain 1,2-dibromoethane and 1,2-dichloroethane. These chemicals act as lead scavengers, preventing a buildup of lead compounds in the combustion

TABLE 7-3. COMPOSITION AND PROPERTIES OF TEL AND TML

	TEL	TML
COMPOSITION, WT %		
Lead Alkyl	61.5	50.8
1,2-dibromoethane	17.9	17.9
1,2-dichloroethane	18.8	18.8
Dye, diluent, inhibitor, etc.	1.8	12.5
Lead content, wt%	39.39	39.39
PROPERTIES		
Specific Gravity, 20°/4°C	1.6	1.58
Vapor pressure @ 20° C mbar	67	87
Boiling point of lead alkyl, °C	200 (decomposes)	110

Source: Reference 230.

chamber. These lead deposits can flake off and cause valve burning by holding valves off their seats, thus allowing the hot combustion gases to escape past the valves. During combustion, lead and halogenated additives combine to form lead halides that are exhausted from the engine.[230]

Of the different aviation fuels currently in use, only aviation gasoline contains lead as an anti-knock compound. Jet kerosene and JP-4 do not contain lead additives. Aviation gasoline is used in reciprocating piston-engine aircraft and is therefore more prevalent in civil aviation and general commercial aviation. There are two grades of aviation gasoline: low-lead, which has a lead concentration of 2 g lead/gal (0.528 g/L) aviation gasoline, and high-lead, which has a lead concentration of 4 g lead/gal (1.057 g/L) aviation gasoline. Only TEL is used in leaded aircraft fuel.[239]

Due to the economics of producing leaded gasoline, fewer refineries and blending facilities are producing it. This has caused the Federal Aviation Administration and the General Aviation Manufacturer's Association to begin a cooperative research program to develop an

unleaded gasoline for aircraft. The two organizations have set a goal to develop an American Standard for Testing and Material (ASTM) specification for unleaded gasoline for aircraft by 1995 and the goal of eliminating the use of leaded gasoline in aircraft by 1998.[240]

Although Section 211(n) of the CAA does not require a lead phase-down of aviation fuels, the aircraft fuel industry is currently developing standards for unleaded aviation gasoline, but continues to rely on leaded fuels.

7.1.2 Unleaded Fuels

Refiners began producing unleaded gasoline in the early 1970s for automobiles equipped with catalytic converters. As a result of the 1990 CAA amendments, lead additives in gasoline were replaced by high-octane hydrocarbon fractions with properties suitable for gasoline blending. Straight-run refinery products, for example, have comparatively low-octane numbers. On the other hand, aromatics, isoparaffins, and olefins produced from catalytic cracking and reforming processes have much higher octane numbers. Adjusting the relative amount of these hydrocarbon fractions results in gasolines with different octane numbers.[241] Still, a trace amount of lead remains in unleaded gasoline. This lead is picked up as it passes through refinery processes and fuel distribution systems that had previously contained leaded gasoline. These trace amounts may not exceed 0.05 grams of lead per gallon. At this level, catalytic control devices are still protected.[231]

7.2 EVAPORATIVE EMISSIONS FROM FUEL DISTRIBUTION FOR MOBILE SOURCES

Calculated TML evaporative profiles are two orders of magnitude greater than TEL profiles because the vapor pressure of TML (23 mm Hg at 68°F) is two orders of magnitude higher than that of TEL (0.2 mm Hg at 68°F). The difference between TML and TEL varies relative to ambient temperatures, with lower temperatures producing the greatest differences.

The TML weight fraction can be applied to leaded gasoline throughput to estimate TML emissions. The TML emission factor can be adjusted for different ambient temperatures, as noted in the following equation:

$$TML_{gas} = \frac{1.321 \times 10^{0.60 - \left(\frac{1289.8}{T + 219}\right) + \left(\frac{900}{T + 233}\right)}}{6900 + 1.015 \times 10^{0.60 - \left(\frac{1289.8}{T + 219}\right) + \left(\frac{900}{T + 233}\right)}}$$

where: TML_{gas} = TML vapor phase fraction (mass TML emitted/mass leaded gasoline throughput)
T = Temperature (°C)

Similarly, the TEL weight fraction can be applied to leaded gasoline throughput to estimate TEL emissions. To adjust TEL emission factors for different ambient temperatures, the following equation can be used:

$$TEL_{gas} + \frac{1.934 \times 10^{1.451 - \left(\frac{1789.6}{T + 195}\right) + \left(\frac{900}{T + 233}\right)}}{6200 + 1.563 \times 10^{1.451 - \left(\frac{1789.6}{T + 195}\right) + \left(\frac{900}{T + 233}\right)}}$$

where: TEL_{gas} = TEL vapor phase fraction (mass TEL emitted/mass leaded gasoline throughput)
T = Temperature (°C)

TEL emissions from the distribution of aviation fuel can be estimated using the following equation:

$$TEL_{avgas} = \frac{79.25 \times 10^{0.914 - \left(\frac{1789.6}{T + 195}\right) + \left(\frac{1115.86}{T + 228}\right)}}{6900 - 62.35 \times 10^{0.914 - \left(\frac{1789.6}{T + 195}\right) + \left(\frac{1115.86}{T + 228}\right)}}$$

where: TEL_{avgas} = TEL vapor phase fraction (mass TEL emitted/mass leaded aviation gasoline throughput)
T = Temperature (°C)

In general, most TEL and TML evaporative emissions from leaded fuel distribution are relatively small. In 1990, 5 percent of highway fuel sold in the United States was leaded. Given that the lead concentration of leaded fuel used in the EPA study (0.85 g/gal), and the lead concentrations in current unleaded fuels (0.0003 g/gal) are approximately three orders of magnitude different, and given that the quantity of fuel distributed is approximately two orders of magnitude different, total evaporative emissions from fuel distribution should be less for unleaded than for leaded fuel. By the end of 1995, the lead content of all motor vehicle fuels will be reduced to zero, making the highway fuel distribution category a negligible source.

7.3 COMBUSTION EMISSIONS

Vehicles designed and operated on leaded gasoline exhaust 75 percent of the lead in the fuel. For catalytically equipped vehicles operating on unleaded gasoline, 40 percent of the lead burned is emitted into the atmosphere. Lead is retained in the catalyst (45 percent), crankcase oil (25 percent), combustion chamber, and the rest of the exhaust system (30 percent).[242,243]

This information can be used to approximate lead emissions from mobile combustion sources using the following equation:

$$E_{cf} = L_f \times \frac{R_f}{100} \times F_f$$

where: E_{cf} = Emission of lead from vehicle combustion for leaded or unleaded fuel "f" (g/year)
L_f = Lead content of fuel "f" (g/gal)
R_f = Amount of lead released for fuel type "f" (75 percent for vehicles designed for, and using, leaded gasoline, and 40 percent for vehicles designed for, and using, unleaded gasoline)
F_f = Fuel throughput (gal/year)

For a more precise estimate of mobile combustion emissions, use of the EPA/ Office of Mobile Sources (OMS) PART5 Mobile Emission Model is recommended. The reader is cautioned that modeling results are only estimates, not actual emissions, and have the potential for being over or under estimated.

Presently, there are no emission factors to characterize lead emissions from aircraft fuel combustion. The equation used to characterize motor vehicle emissions may be used, but will probably lead to an underestimation of emissions because of differences in engine design, exhaust system configurations, and operation.

7.4 ROAD DUST

Several studies have shown that lead from atmospheric deposition can be reintrained by vehicles as road dust.[244-248] This section provides estimation procedures for this source derived from a U.S. EPA report entitled *Estimating and Controlling Fugitive Lead Emissions from Industrial Sources*.[249]

7.4.1 Paved Roads

Open dust fugitive emissions from paved roads depend upon the loose surface material and traffic characteristics of the road. These emissions have been determined to vary directly in proportion to the surface material loading and silt content of the road. The surface material loading is the amount of loose dust on the road surface and is measured in units of mass of material per unit area. (Surface material loading for a specific road is typically expressed in units of mass per unit length of road.) The silt content is the percentage of silt (i.e., particles less than or equal to 75 microns in diameter) in the loose surface dust. Some typical values for silt loading on industrial paved roads are presented in Table 7-4. Other factors that affect industrial paved road fugitive emissions include the volume of traffic, number of traffic lanes, average vehicle weight, and the degree to which vehicles travel on nearby unpaved areas (thereby allowing more dust to be deposited on the paved road). This last factor is known as the industrial

TABLE 7-4. INDUSTRIAL PAVED ROAD SILT LOADINGS

Industry	No. of sites[a]	No. of samples[a]	Silt, percent w/w		No. of travel lanes	Silt loading, g/m^2	
			Range	Mean		Range	Mean
Copper smelting	1	3	15.4 - 21.7	19.0	2	188 - 400	292
Iron and steel production	6	20	1.1 - 35.7	12.5	2	0.09 - 79	12
Asphalt batching	1	3	2.6 - 4.6	3.3	1	76 - 193	120
Concrete batching	1	3	5.2 - 6.0	5.5	2	11 - 12	12
Sand and gravel processing	1	3	6.4 - 7.9	7.1	1	53 - 95	70

Source: Reference 249.

[a] The data presented in this table are based on an EPA-sponsored sampling and analysis program, for which the number of samples specified in the table were collected at the specified number of sites.

augmentation factor and ranges in value from 1.0 to 7.0. Higher values indicate greater fugitive dust emissions. Typical values for this factor are found in Table 7-5.

The magnitude of fugitive lead emissions (or emissions of any other substance) may be estimated by direct proportion with the percent by weight of lead (or substance of concern) in the silt fraction. Because of variations from location to location, site-specific data should be used for all of the above-mentioned factors whenever possible.

The fugitive lead emission factor for industrial paved roads in units of kilograms per vehicle kilometer traveled (kg/VKT), or pounds per vehicle mile traveled (lb/VMT), can be determined by the following modified equation for total suspended particulate emissions:

$$E = 0.22\ I \left(\frac{C}{100}\right) \left(\frac{4}{n}\right) \left(\frac{s}{10}\right) \left(\frac{L}{280}\right) \left(\frac{W}{2.7}\right)^{0.7} \text{ (kg/VKT)}$$

$$E = 0.22\ I \left(\frac{C}{100}\right) \left(\frac{4}{n}\right) \left(\frac{s}{10}\right) \left(\frac{L}{1,000}\right) \left(\frac{W}{3}\right)^{0.7} \text{ (lb/VMT)}$$

TABLE 7-5. TYPICAL VALUES FOR PAVED ROAD INDUSTRIAL AUGMENTATION FACTOR (I)

I[a]	Conditions
1.0	Travel on paved roads only
3.5	Travel on paved roads with unpaved shoulders--20 percent of vehicles travel with one set of wheels on shoulder
7.0	Traffic enters from unpaved roads

Source: Reference 249.

[a] Values are dimensionless.

where:

E	=	emission factor, kg/VKT (lb/VMT)
I	=	industrial augmentation factor (dimensionless)
C	=	average percent by weight of lead in the silt fraction
n	=	number of traffic lanes
s	=	average surface material silt content, percent
L	=	average surface dust loading, kg/km (lb/mile)
W	=	average vehicle weight, Mg (ton)

To estimate lead emissions from paved road dust, the developed emission factors should be applied to local VMT data.

7.4.2 Unpaved Roads

Fugitive dust emissions from unpaved roads, like paved road fugitive emissions, are directly proportional to the silt content of the surface material. In addition, fugitive lead emissions can be estimated by direct proportion with the lead content in the silt fraction. Unpaved road fugitive dust emissions are also proportional to the mean vehicle speed, mean vehicle weight, and mean number of wheels. Fugitive emissions from unpaved roads are also affected by the rainfall frequency. For particles under 30 microns in diameter, a particle size multiplier must also be included in the computation of emissions. However, for total suspended particulate emissions, which is the concern here, the value of this factor is assumed to be unity, and it may be dropped from the equation.

The fugitive lead emission factor for unpaved roads per unit of vehicle distance traveled can be estimated by the following modified equation for total suspended particulates:

$$E = (1.7)\left(\frac{C}{100}\right)\left(\frac{s}{12}\right)\left(\frac{S}{48}\right)\left(\frac{W}{2.7}\right)^{0.7}\left(\frac{w}{4}\right)^{0.5}\frac{(365 - p)}{365} \text{ (kg/VKT)}$$

$$E = (5.9)\left(\frac{C}{100}\right)\left(\frac{s}{12}\right)\left(\frac{S}{30}\right)\left(\frac{W}{3}\right)^{0.7}\left(\frac{w}{4}\right)^{0.5}\frac{(365 - p)}{365} \text{ (lb/VMT)}$$

where:

E	=	emission factor, kg/VKT (lb/VMT)
C	=	percent by weight of lead in the silt fraction
s	=	average silt content of road surface material, percent
S	=	average vehicle speed, km/h (mil/h)
W	=	average vehicle weight, Mg (ton)
w	=	average number of wheels (dimensionless)
p	=	number of days with ≥0.254 mm (0.01 in) of precipitation per year

Measured silt values for a number of industries are given in Table 7-6. The number of wet days per year, p, for the geographical area of interest should be determined from local climatic data. As with paved road fugitive dust emission factors, the use of site-specific data is strongly encouraged.

To estimate lead emissions from unpaved road dust, the developed emission factors should be applied to local VMT data.

TABLE 7-6. TYPICAL SILT CONTENT VALUES OF SURFACE MATERIAL ON INDUSTRIAL AND RURAL UNPAVED ROADS

Industry	Road Use or Surface Material	Plant Sites[a]	Test Samples[a]	Silt, percent by weight	
				Range	Mean
Copper smelting	Plant road	1	3	15.9 - 19.1	17.0
Iron and steel production	Plant road	9	20	4.0 - 16.0	8.0
Sand and gravel processing	Plant road	1	3	4.1 - 6.0	4.8
Stone quarrying and processing	Plant road	1	5	10.5 - 15.6	14.1
Taconite mining and processing	Haul road	1	12	3.7 - 9.7	5.8
	Service road	1	8	2.4 - 7.1	4.3
Western surface coal mining	Access road	2	2	4.9 - 5.3	5.1
	Haul road	3	21	2.8 - 18	8.4
	Scraper road	3	10	7.2 - 25	17
	Haul road (freshly graded)	2	5	18 - 29	24
Rural roads	Gravel	1	1	N/A	5.0
	Dirt	2	5	5.8 - 68	28.5
	Crushed limestone	2	8	7.7 - 13	9.6

Source: Reference 249.

[a] The data presented in this table are based on an EPA-sponsored sampling and analysis program, for which the number of samples specified in this table were collected at the specified number of sites.

N/A = Not applicable.

SECTION 8.0
SOURCE TEST PROCEDURES

The EPA has published reference methods for measuring lead in ambient air and lead contained in stack gas emissions. *EPA Reference Method for the Determination of Lead in Suspended Particulate Matter Collected from Ambient Air* was first published in the *Federal Register* on October 5, 1978, and was last revised on July 1, 1987.[250] The EPA has also published Method 12 and draft Method 29 for measuring lead in stack gases. Method 12 was first published in the *Federal Register* on January 14, 1980 and last revised on November 14, 1990 and is used to sample for only total inorganic lead in stack gases.[251] Draft Method 29 was first published in the *Federal Register* on July 17, 1991 as part of the boiler and industrial furnace regulations and is used to sample for total inorganic and organic lead and other metals in stack gases. EPA Method 29 was finalized on April 25, 1996 and is included in Appendix A of 40 CFR Part 60.

Sections 8.1 and 8.2 of this report summarize the field sampling procedures for measuring lead in ambient air and stack gases, respectively. Section 8.3 describes the different analytical techniques used to analyze and measure the amount of lead collected in ambient air and stack gas samples.

8.1 AMBIENT AIR SAMPLING METHODS

Ambient air concentrations of lead in suspended PM can be measured using *EPA Reference Method for the Determination of Lead in Suspended Particulate Matter Collected from Ambient Air*.[250] Figure 8-1 shows a simplified diagram of the components of the high-volume ambient air sampling equipment for lead. The equipment is mounted in an enclosed

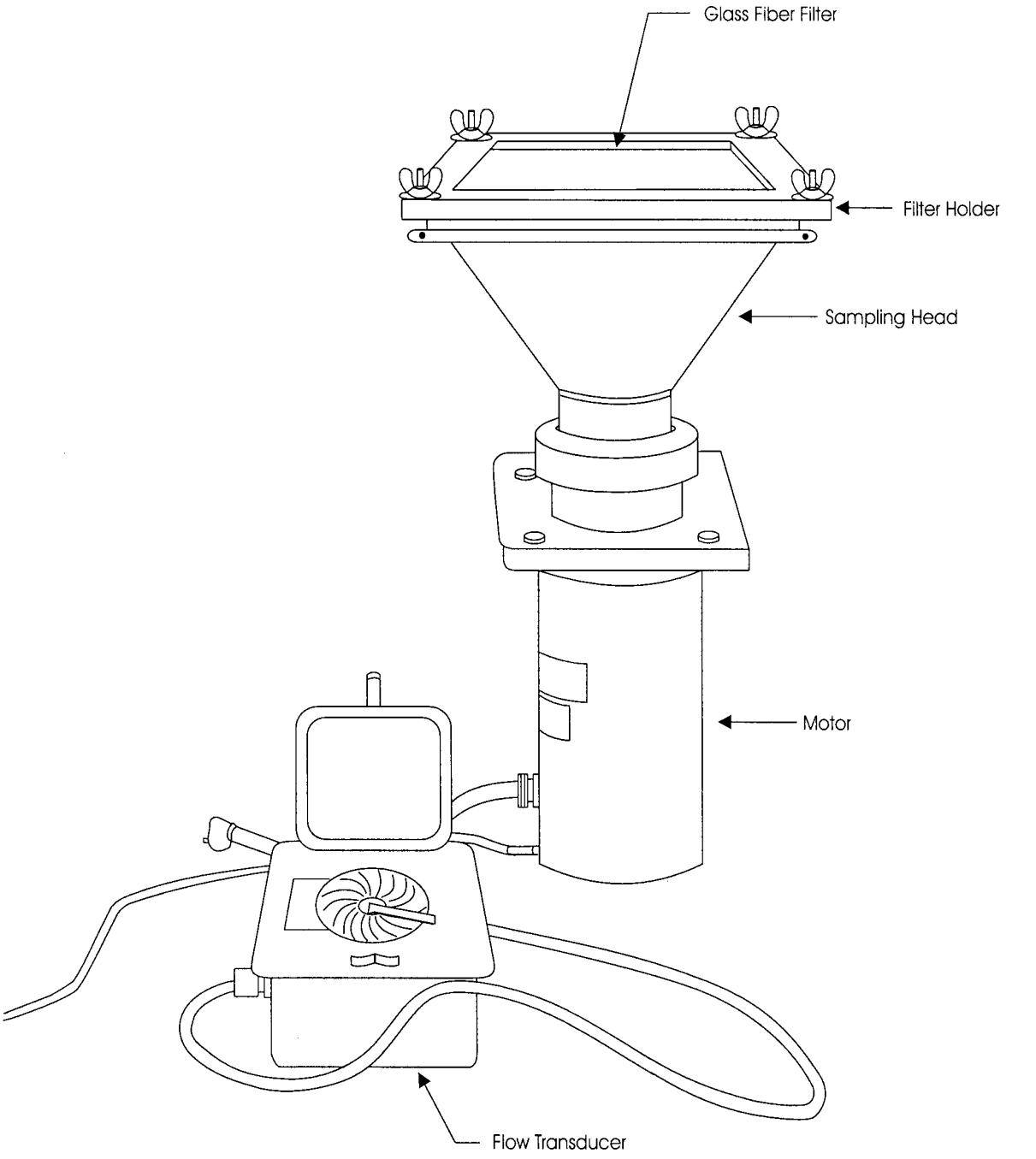

Figure 8-1. Components of a High-Volume Ambient Air Sampler for Lead

Source: Reference 253.

shelter equipped with a roof. Ambient air is drawn under the roof of the shelter through a pre-weighed glass-fiber filter. Figure 8-2 shows a simplified diagram of the air flow through a high-volume sampler located in a shelter.[253] The high-volume sampler should be operated for 24 hours at an average flow rate of 1.7 cubic meters per minute (m^3/min). The primary and secondary national ambient air quality standards for lead are 1.5 micrograms per cubic meter (µg/m^3) averaged over a calendar quarter. For determining compliance with the primary and secondary national ambient air quality standards for lead, at least one 24-hour sample must be collected every six days except during periods or seasons exempted by the Regional EPA Administrator.[254]

After sampling, the filter is removed and sent to a laboratory for analysis. The filter is weighed several times until a constant weight is measured and then the filter is digested in an acid solution and analyzed for total lead content either by atomic absorption spectrophotometry (AAS) or inductively coupled plasma emission spectroscopy (ICP). The typical range in the amount of lead collected by use of this method is 0.07 to 7.5 µg/m^3 assuming an upper linear range of analysis of 15 micrograms per milliliter (µg/mL) and an air volume of 2,400 cubic meters (m^3).

The major advantage to the high-volume lead sampling method is the low detection limit that can be achieved (i.e., 0.07 to 7.5 µg lead/m^3). Another advantage is that the ambient air sample is collected over a 24-hour period, which encompasses all types of weather conditions, particularly temperature changes, and the range of emission source activities that occur throughout a 24-hour period.

One disadvantage of the high-volume sampling method is that it was designed for sampling only total inorganic lead compounds in suspended PM. Inorganic lead cannot be speciated and most organic lead compounds cannot be detected. A second disadvantage is that the high-volume method is very dependent on meteorological conditions. Any change in wind speed or direction and any amount of precipitation can influence the sample results. To interpret the effects of weather conditions on the sample results, meteorological data must be recorded during the sampling period.

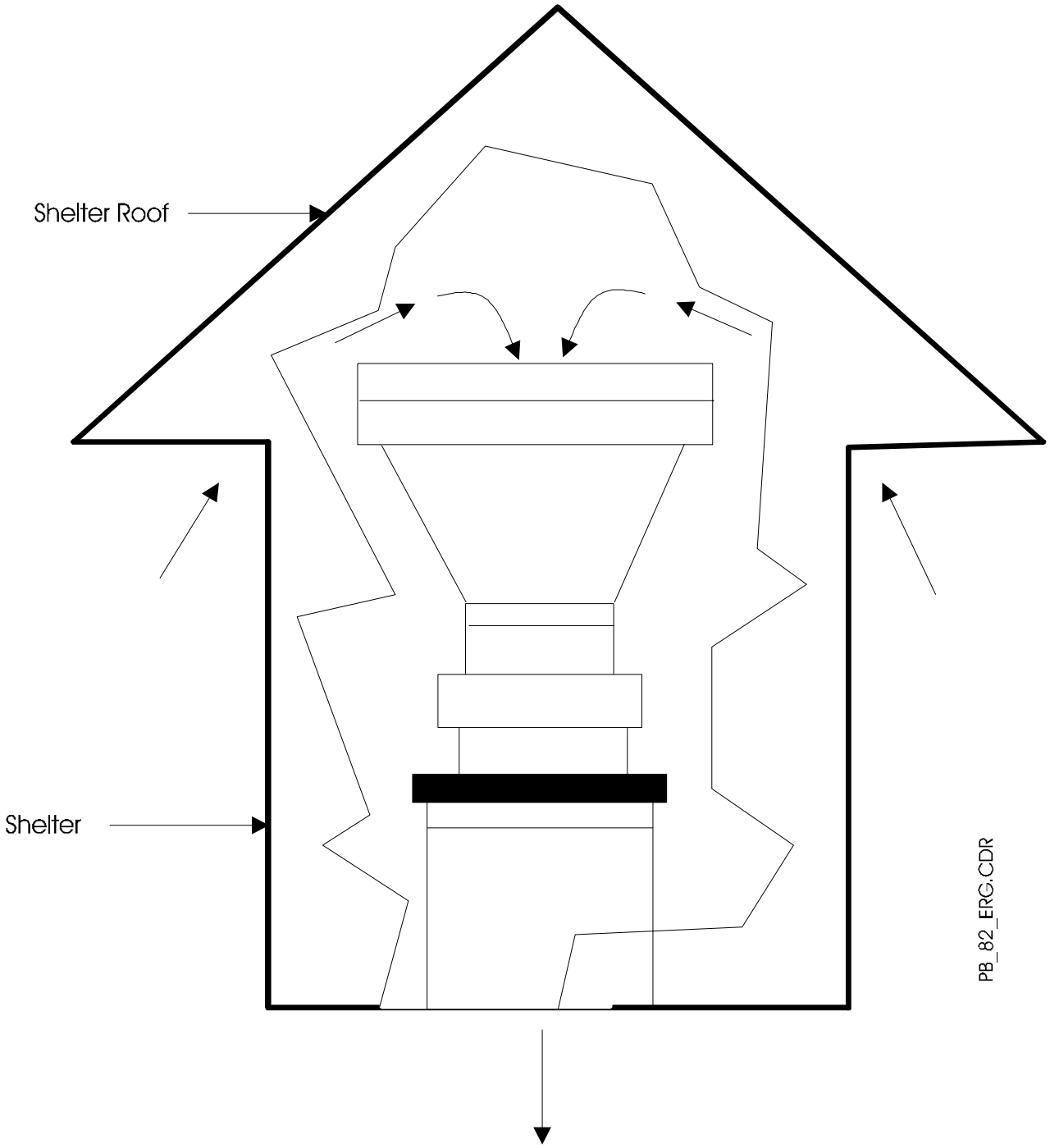

Figure 8-2. Air Flow through a High-Volume Sampler in a Shelter

Source: Reference 253.

8.2 STATIONARY SOURCE SAMPLING METHODS

Two methods are available for sampling stack gas concentrations of lead: EPA Method 12 and EPA Method 29.[251,252] Method 12 is used to sample for only total inorganic lead. EPA Method 29 is used to sample for total inorganic and organic lead and other metals in a stack. These two methods are described on the following pages.

8.2.1 EPA Method 12 - Methodology for the Determination of Metals Emissions in Exhaust Gases from Hazardous Waste Incineration and Similar Combustion Sources

Method 12 (also called a multi-metals train) can be used to sample PM and total inorganic lead (i.e., elemental lead and inorganic lead compounds) isokinetically from stack gases. A diagram of the Method 12 sampling train is shown in Figure 8-3. Particulate lead is collected through a glass nozzle and probe onto a glass-fiber filter and in a dilute nitric acid solution in the impingers. The nozzle and probe are washed with dilute nitric acid and the wash, filter, and impinger solution are sent to a laboratory, where they are digested in an acid solution and analyzed for total lead content by AAS or ICP.

The exact run time and volume samples vary from source to source depending on the required detection limit. Typically, Method 12 sampling is conducted for 2 hours to sample approximately 2.55 m^3 of stack gas. The lower range of detection for this method is 25 µg of total lead. The upper range can be extended considerably by diluting the sample prior to analysis.

The major advantage to Method 12 is that the method was designed to sample for inorganic lead compounds from a wide variety of industrial processes, and the method has been validated. The stack gas stream is sampled isokinetically, which provides an accurate emission rate. Method 12 is also extremely flexible. The length of sample runs and the sample volume collected can be adjusted depending on the expected concentration of the stack gas stream. The disadvantage is that Method 12 cannot be used to speciate inorganic lead compounds or to sample for organic lead compounds.

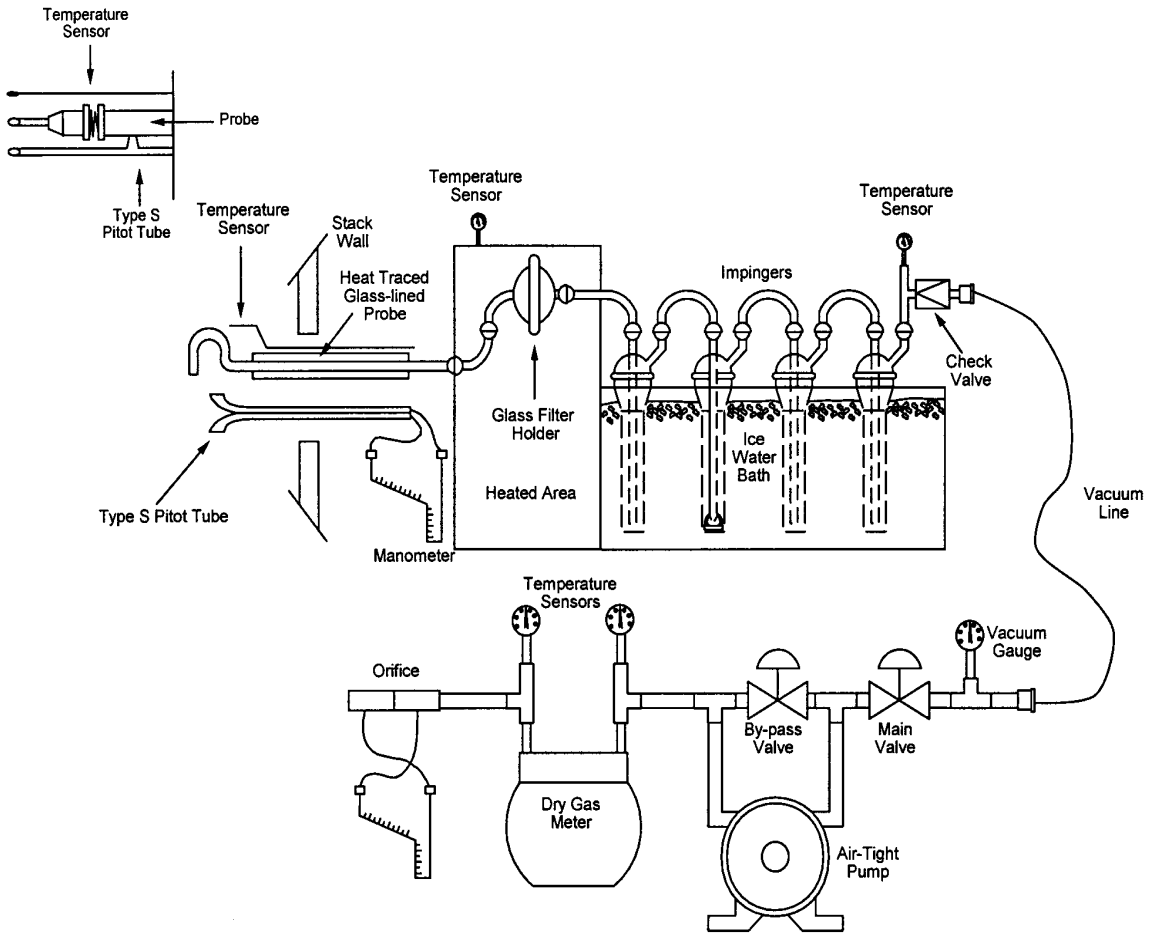

Figure 8-3. Method 12 Sampling Train

Source: Reference 251.

8.2.2 EPA Method 29 - Determination of Metals Emissions from Stationary Sources

EPA Method 29 can be used to sample PM and total inorganic and organic lead compounds isokinetically from stack gases. The Method 29 sampling train is a modified EPA reference Method 5 sampling train and is shown in Figure 8-4.

Particulate lead with a particle size diameter greater than or equal to 0.3 micrometers is collected through a glass nozzle and probe onto a pre-weighed glass-fiber filter. Particulate lead with a particle size diameter less than 0.3 micrometers and lead compounds in the vapor phase pass through the filter and are collected in a dilute nitric acid/hydrogen peroxide solution in the impingers. The nozzle and probe are washed with dilute nitric acid and the wash, filter, and impinger solution are sent to a laboratory, where they are digested in an acid solution and analyzed for lead content either by AAS or ICP. The samples collected on the filter and in the impinger solution can be analyzed separately to differentiate between the amount of particulate lead and lead in the gas phase.

The exact run time and volume sampled varies from source to source depending on the required detection limit. Typically, the Method 29 train is run for 2 hours and samples approximately 2.55 m^3 of stack gas. The lower range of detection for this method is 25 µg of total lead. The upper range can be extended considerably by diluting the sample prior to analysis.

This method is applicable to the determination of antimony (sb), arsenic (As), barium (Ba), beryllium (Be), cadmium (Cd), chromium (Cr), cobalt (Co), copper (Cu), lead (Pb), manganese (Mn), Mercury (Hg), nickel (Ni), phosphorous (P), selenum (Se), silver (Ag), thallium (Ti), and zinc (Zn). Although it is the preferred method for sampling stack gas streams and can measure several metals at one time, the method cannot be used to speciate inorganic or organic lead compounds.

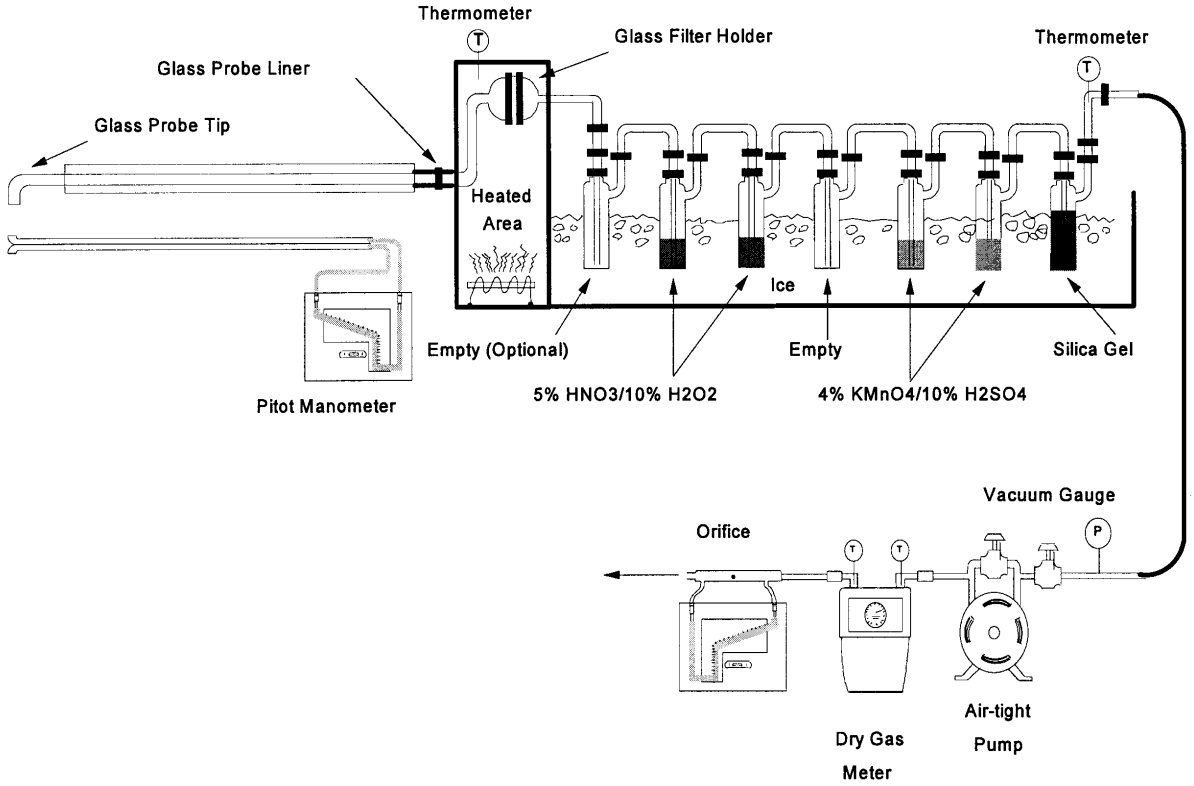

Figure 8-4. Method 29 Sampling Train

Source: Reference 252.

8.3 ANALYTICAL TECHNIQUES FOR THE MEASUREMENT OF LEAD

The most common technique for measuring total lead in air samples is spectroscopy. The two spectroscopic techniques used most by environmental laboratories are AAS and ICP. AAS is the most common method used to measure total lead. The advantages to AAS are that the method is simple, rapid, and applicable to a large number of metals. Samples other than drinking water must be acid-digested prior to analysis. Two types of AAS methods for measuring total lead are direct aspiration (flame) and graphite furnace.

The second most common technique for measuring total lead in air samples is ICP, which allows simultaneous, or sequential, determination of several metals in a sample during a single analytical measurement. Air samples must be acid-digested prior to analysis.

8.3.1 Direct Aspiration (Flame) Atomic Absorption Spectroscopy

Method 7420 specifies the procedure for analyzing air samples for total lead using direct-aspiration (flame) AAS.[256] In direct-aspiration (flame) AAS, a sample is aspirated and atomized in an air/acetylene flame. A light beam from a hollow cathode lamp whose cathode is made of the element being measured is directed through the flame into a monochromator, and onto a detector that measures the amount of light absorbed. Absorption depends upon the presence of free, unexcited ground-state atoms in the flame. Because the wavelength of the light beam is characteristic of only the element being measured, the light energy absorbed by the flame is a measure of the concentration of that element in the sample. The detection limit for lead is 100 micrograms per liter (µg/L). The optimum concentration ranges are from 1,000 to 20,000 µg per sample. If direct-aspiration (flame) AAS techniques do not provide adequate sensitivity, graphite furnace techniques can be used.

8.3.2 Graphite Furnace Atomic Absorption Spectroscopy

Method 7421 specifies the procedure for analyzing air samples for total lead using graphite furnace AAS.[257] The principle of graphite furnace AAS is essentially the same as for direct-aspiration (flame) AAS, except a furnace rather than a flame is used to atomize the sample. In graphite furnace AAS, a representative aliquot of a sample is placed in a graphite tube in the furnace, evaporated to dryness, charred, and atomized. The radiation from a given excited element is passed through the vapor containing ground-state atoms of that element. The intensity of the transmitted radiation decreases in proportion to the amount of the ground-state element in the vapor. The metal's atoms to be measured are placed in the beam of radiation by increasing the temperature of the furnace, thereby causing the injected specimen to be volatized. A monochromator isolates the characteristic radiation from the hollow cathode lamp or electrodeless discharge lamp, and a photosensitive device measures the attenuated transmitted radiation. The detection limit for lead is 1.0 µg/L. The optimum concentration ranges are from 5 to 100 µg per sample.

The major advantage of this technique is that it affords extremely low detection limits. It is the easiest technique to perform on relatively clean samples. Because this technique is so sensitive, however, interferences can be a problem; finding the optimum combination of digestion, heating times, temperatures, and matrix modifiers can be difficult for complex matrices.

8.3.3 Inductively Coupled Plasma Atomic Emission Spectroscopy

Method 6010A specifies the procedures for analyzing air samples for total lead using ICP.[258] The ICP method measures element-emitted light by optical spectrometry. The sample is nebulized and the resulting aerosol is transported to the plasma torch, where excitation occurs. Characteristic atomic-line emission spectra are produced by radio-frequency inductively coupled plasma. The spectra are dispersed by a grating spectrometer, and the intensities of the lines are monitored by photomultiplier tubes. The photocurrents from the photomultiplier tubes

are processed and controlled by a computer. The detection limit for lead is 42 µg/L. The optimum concentration range varies with the make and model of the instrument used.

The primary advantage of ICP is that it allows simultaneous or rapid sequential determination of many elements in a short time. The primary disadvantage is background radiation from other elements and the plasma gases. Although all ICP instruments utilize high-resolution optics and background correction to minimize these interferences, analysis for traces of metals in the presence of a large excess of a single metal is difficult.

SECTION 9.0

REFERENCES

1. U.S. EPA. *National Air Pollutant Emission Trends 1900-1995*. EPA-454/R-96-007. Research Triangle Park, North Carolina: U.S. Environmental Protection Agency, Office of Air Quality Planning and Standards, Oct. 1996.

2. Shiroma, Genevieve A., CARB, Letter to Dennis Beauregard, EPA. Comments on draft report, locating and estimating air emissions of lead and lead compounds (August 15, 1996).

3. U.S. EPA Source Test Information Retrieval System (STIRS). U.S. Environmental Protection Agency, Office of Air Quality Planning and Standards, 1994.

4. U.S. EPA Factor Information Retrieval System Version 3.0 (FIRE 3.0). Research Triangle Park, North Carolina: U.S. Environmental Protection Agency, Office of Air Quality Planning and Standards, September 1994.

5. U.S. EPA. *Procedures for Preparing Emission Factor Documents*. EPA-454/R-95-015. Research Triangle Park, North Carolina: U.S. Environmental Protection Agency, Office of Air Quality Planning and Standards, November 1997.

6. Greninger, D., V. Kollonitsch, and C.H. Kline (Charles H. Kline & Co., Inc.). *Lead Chemicals*. New York, New York: International Lead Zinc Research Organization, Inc. (ILZRO), 1975.

7. *The Merck Index: An Encyclopedia of Chemicals, Drugs, and Biologicals*, 10th ed. Rathway, New Jersey: Merck and Company, Inc., 1976. p. 776.

8. *Kirk-Othmer Encyclopedia of Chemical Technology*. 3rd ed. Volume 14. New York, New York: John Wiley and Sons, Inc., 1978. pp. 98-101.

9. Considine, D.M. *Chemical and Process Technology Encyclopedia*. New York, New York: McGraw-Hill Book Company, 1974. p. 681.

10. Sutherland, C.A., E.F. Milner, R.C. Kerby, and H. Teindl. Lead. *Ullmann's Encyclopedia of Industrial Chemistry*. 5th ed. Volume A15. B. Elvers, H. Hawkins, and Schultz, G. eds. Federal Republic of Germany: VCH, 1989. pp. 193 to 247.

11. Hawley's Condensed Chemical Dictionary. 12th ed. R.J. Lewis, Sr., ed. New York, New York: Von Nostrand Reinhold, 1993. pp. 686 to 693.

12. U.S. EPA. *Compilation of Air Pollutant Emission Factors*, 5th ed. (AP-42), Vol. I: Stationary Point and Area Sources, Section 12.16: Lead Oxide and Pigment Production. Research Triangle Park, North Carolina: U.S. Environmental Protection Agency, Office of Air Quality Planning and Standards, 1995. p. 12.16-1.

13. American Chemical Society. *Chemcyclopedia 1995*, Volume 1. Washington, D.C.: American Chemical Society, 1995. p. 139.

14. Nordyke, J.S. *Lead in the World of Ceramics.* Columbus, Ohio: American Ceramic Society, 1984.

15. Sax, N. Dangerous Properties of Industrial Materials, 1993.

16. Woodbury, W.D. *Annual Report 1992*, Lead. Washington, D.C.: U.S. Department of Interior, Bureau of Mines, October 1993.

17. OECD. *Risk Reduction Monograph No. 1: Lead*. Paris, France: Environment Directorate, Organization for Economic Co-operation and Development, 1993.

18. U.S. EPA. *Control Techniques for Lead Air Emissions*, Unpublished Draft. Research Triangle Park, North Carolina: U.S. Environmental Protection Agency, Office of Air Quality Planning and Standards, Emission Standards Division, 1990.

19. Woodbury, W.D. *Annual Report 1990, Lead*. Washington, D.C.: Bureau of Mines, U.S. Department of the Interior, U.S. Government Printing Office, April 1992.

20. U.S. EPA. *Compilation of Air Pollutant Emission Factors*, 5th ed. (AP-42), Vol. I: Stationary Point and Area Sources, Section. Section 12.6: Primary Lead Smelting. Research Triangle Park, North Carolina: U.S. Environmental Protection Agency, Office of Air Quality Planning and Standards, 1995.

21. U.S. EPA. *Secondary Lead Smelting Background Information Document for Proposed Standards*, Volume 1. EPA-450/R-94-024a. Research Triangle Park, North Carolina: U.S. Environmental Protection Agency, Office of Air Quality Planning and Standards, June 1994. pp. 2-1 to 2-36.

22. U.S. EPA. *Assessment of the Controllability of Condensible Emissions*. EPA-600/8-90-075. Research Triangle Park, North Carolina: U.S. Environmental Protection Agency, Air and Energy Engineering Research Laboratory, October 1990.

23. U.S. EPA. *Compilation of Air Pollutant Emission Factors*, 4th ed. (AP-42), Vol. I: Stationary Point and Area Sources, Supplements A, B, and C. Research Triangle Park, North Carolina: U.S. Environmental Protection Agency, Office of Air Quality Planning and Standards, 1985.

24. Weinberg, David. Letter to Dennis Beauregard, EPA. Comments on draft report, Locating and Estimating Air Emissions of Lead and Lead Compounds (August 15, 1996).

25. Hall, R.M. and J.L. Gittleman. *Control Technology for Metal Reclamation Industries at Sanders Lead Company Inc.* CT-202-11a. Cincinnati, Ohio: U.S. Department of Health and Human Services, Engineering Control Technology Branch, Division of Physical Sciences and Engineering, NIOSH, July 1993. pp. 1-8.

26. U.S. EPA. *Secondary Lead Smelting Background Information Document for Proposed Standards.*, Volume 1. EPA-450/R-94-024a. Research Triangle Park, North Carolina: U.S. Environmental Protection Agency, Office of Air Quality Planning and Standards, June 1994. pp. 3-1 to 3-13.

27. U.S. EPA. Primary Copper Smelters. *National Emission Standards for Hazardous Air Pollutants (NESHAP)*, Final Summary Report. ESD Project No. 91/61. Research Triangle Park, North Carolina: U.S. Environmental Protection Agency, Office of Air Quality Planning and Standards, Emission Standards Division, July 1995.

28. U.S. EPA. *Compilation of Air Pollutant Emission Factors*, 5th ed. (AP-42), Vol. I: Stationary Point and Area Sources, Section. Section 12.11: Secondary Lead Processing. Research Triangle Park, North Carolina: U.S. Environmental Protection Agency, Office of Air Quality Planning and Standards, 1995.

29. U.S. EPA. *Secondary Lead Smelting Background Information Document for Proposed Standards*, Volume 2: Appendices, Appendix A. EPA-450/R-94-024b. Research Triangle Park, North Carolina: U.S. Environmental Protection Agency, Office of Air Quality Planning and Standards, 1994.

30. Pacific Environmental Services, Inc. *Draft Final Test Report, East Penn Manufacturing Company, Secondary Lead Smelter*, Volume I, Appendices A and B. Research Triangle Park, North Carolina: Pacific Environmental Services, Inc, March 15, 1994.

31. U.S. EPA. *Control Techniques for Lead Air Emissions*, Vol. II, Chapter 4 to Appendix B. EPA-450/2-77-012. Research Triangle Park, North Carolina: U.S. Environmental Protection Agency, Office of Air Quality Planning and Standards, Emission Standards Division, 1977.

32. U.S. EPA. *Compilation of Air Pollutant Emission Factors*, 5th ed. (AP-42), Vol. I: Stationary Point and Area Sources, Section. Section 12.3: Primary Copper Smelting. Research Triangle Park, North Carolina: U.S. Environmental Protection Agency, Office of Air Quality Planning and Standards, 1995.

33. Jolly, J. (Bureau of Mines, U.S. Department of the Interior, Washington, D.C.). Facsimile concerning capacities of U.S. copper smelters. January 23, 1993.

34. U.S. EPA. *Compilation of Air Pollutant Emission Factors*, 5th ed. (AP-42), Vol. I: Stationary Point and Area Sources, Section. Section 12.9: Secondary Copper Smelting and Alloying. Research Triangle Park, North Carolina: U.S. Environmental Protection Agency, Office of Air Quality Planning and Standards, 1995.

35. U.S. EPA. *Compilation of Air Pollutant Emission Factors*, 5th ed. (AP-42), Vol. I: Stationary Point and Area Sources, Section. Section 12.7: Zinc Smelting. Research Triangle Park, North Carolina: U.S. Environmental Protection Agency, Office of Air Quality Planning and Standards, 1995.

36. Jolly, J. (Bureau of Mines, U. S. Department of the Interior), facsimile concerning capacities of U.S. zinc smelters. February 10, 1993.

37. Howell Metal Co. Source Test Report. New Market, VA. 1991.

38. U.S. EPA. *Compilation of Air Pollutant Emission Factors*, 5th ed. (AP-42), Vol. I: Stationary Point and Area Sources, Section. Section 12.8: Secondary Aluminum Operations. Research Triangle Park, North Carolina: U.S. Environmental Protection Agency, Office of Air Quality Planning and Standards, 1995. pp. 12.8-1 to 12.8-7.

39. California Air Resources Board. *Source Emissions Testing*, March 26, 1992. Report No. ERC-8.

40. California Air Resources Board. *Emissions Measurements for AB2588 Toxics*, September 7, 1991. Report No. ERC-32.

41. Delta Group, Inc. *Report on Compliance Testing*. CAE Project No. 5681. Muskego, Wisconsin: Delta Group, Inc., June 24, 1991.

42. Keller, P.A. (Radian Corporation) and J. Maysilles (U.S. Environmental Protection Agency). Telephone conversation concerning short form survey of iron and steel foundry locations. April 2, 1994.

43. U.S. EPA. *Electric Arc Furnaces in Ferrous Foundries - Background Information for Proposed Standards*. 3-80-020a. Research Triangle Park, North Carolina: U.S. Environmental Protection Agency, Office of Air Quality Planning and Standards, May 1980.

44. U.S. EPA. *Compilation of Air Pollutant Emission Factors*, 5th ed. (AP-42), Vol. I: Stationary Point and Area Sources, Section. Section 12.5: Iron and Steel Production. Research Triangle Park, North Carolina: U.S. Environmental Protection Agency, Office of Air Quality Planning and Standards, 1995.

45. U.S. EPA. *Emissions Factors for Iron Foundries - Criteria and Toxic Pollutants*. EPA-600/2-90-044. Cincinnati, Ohio: Control Technology Center, Office of Research and Development, 1990.

46. U.S. EPA. *Compilation of Air Pollutant Emission Factors*, 5th ed. (AP-42), Vol. I: Stationary Point and Area Sources, Section. Section 11.24: Metallic Minerals Processing. Research Triangle Park, North Carolina: U.S. Environmental Protection Agency, Office of Air Quality Planning and Standards, 1995.

47. U.S. EPA. *Compilation of Air Pollutant Emission Factors*, 5th ed. (AP-42), Vol. I: Stationary Point and Area Sources, Section. Section 12.10: Gray Iron Foundries. Research Triangle Park, North Carolina: U.S. Environmental Protection Agency, Office of Air Quality Planning and Standards, 1995.

48. California Air Resources Board. U.S. Pipe and Foundry Co. *Stack Emission Tests of the Iron Melting Cupola Dust Collector and the Ductile Treating Dust Collector*. Burlington, New Jersey: United States Pipe and Foundry Company, August 14-16, 1991. Report No. ERC-116.

49. U.S. EPA. *Compilation of Air Pollutant Emission Factors*, 5th ed. (AP-42), Vol. I: Stationary Point and Area Sources, Section. Section 12.18: Leadbearing Ore Crushing and Grinding. Research Triangle Park, North Carolina: U.S. Environmental Protection Agency, Office of Air Quality Planning and Standards, 1995.

50. Woodbury, W.D. *Annual Report 1992, Lead*. Washington, D.C.: Bureau of Mines, U.S. Department of the Interior, U.S. Government Printing Office, October 1993.

51. Shih, C. et al. "Lead Emissions from Stationary Conventional Combustion Processes, with Emphasis on Polychlorinated Compounds of Dibenzo-p-dioxin (PCDDs), Biphenyl (PCBs), and Dibenzofuran (DCDFs)." CCEA Issue Paper presented under EPA Contract No. 68-02-3138. Research Triangle Park, North Carolina: U.S. Environmental Protection Agency, Industrial Environmental Research Laboratory, January 1980.

52. National Research Council. *Particulate Polycyclic Organic Matter*. Washington, D.C.: Committee on Biologic Effects of Atmospheric Pollutants, Division of Medical Sciences, National Academy of Sciences, 1972.

53. National Research Council. *Polycyclic Aromatic Hydrocarbons: Evaluation of Sources and Effects*. Washington, D.C.: Committee on Pyrene and Selected Analogues, Board on Toxicology and Environmental Health Hazards, Commission on Life Sciences, National Academy Press, 1983.

54. Khan, R.M. "Clean Energy from Waste and Coal." Developed from a symposium sponsored by the Division of Fuel Chemistry of the 202nd National Meeting of the American Chemical Society. New York, New York: August 29-30, 1991.

55. U.S. EPA. *Locating and Estimating Air Toxic Emissions from Medical Waste Incinerators*. EPA-454/R-93-053. Research Triangle Park, North Carolina: U.S. Environmental Protection Agency, Office of Air Quality Planning and Standards, October 1993.

56. U.S. EPA. *Correlation of Coal Properties with Environmental Control Technology Needs for Sulfur and Trace Elements*. Contract No. 68-02-3171. Research Triangle Park, North Carolina: U.S. Environmental Protection Agency, Industrial Environmental Research Laboratory, 1983.

57. Davis, W.E. *Emission Study of Industrial Sources of Lead Air Pollutants, 1970*. Contract No. 68-02-0271. Leawood, Kansas: W.E. Davis and Associates, April 1973.

58. Smith, W.S. *Atmospheric Emissions from Fuel Oil Combustion*, Taft Sanitary Engineering Center. Cincinnati, Ohio: U.S. Department of Health Education and Welfare, November 1962.

59. Mass Burn MSW Incineration Study. *Waste Analysis, Sampling, Testing, and Evaluation (WASTE) Program: Effect of Waste Stream Characteristics on MSW Incineration: The Fate and Behavior of Metals*. Vol. II: Technical Report. Burnaby, British Columbia: A.J. Chandler & Associates Ltd., 1993.

60. Niessen, W.R. and R.C. Porter. Methods for Estimating Trace Metal Emissions from Fluidized Bed Incinerators using Advanced Air Pollution Control Equipment. *Air and Waste*. 8:2-3, 1991.

61. U.S. EPA. *Locating and Estimating Air Emissions from Sources of Polycyclic Organic Matter (POM)*. EPA-450/4-84-007p. Research Triangle Park, North Carolina: U.S. Environmental Protection Agency, September 1987.

62. Air & Waste Management Association. *Air Pollution Engineering Manual*, A.J. Buonicore and W. Davis, eds. New York, New York: Van Nostrand Reinhold, 1992.

63. Mead, R.C., G.W. Brooks, and B.K. Post. *Summary of Trace Emissions from and Recommendations of Risk Assessment Methodologies for Coal and Oil Combustion Sources*. EPA Contract No. 68-02-3889, Work Assignment 41. Research Triangle Park, North Carolina: U.S. Environmental Protection Agency, Pollutant Assessment Branch, July 1986.

64. Kelly, M.E. *Sources and Emissions of Polycyclic Organic Matter*. EPA 450/5-83-010b. Research Triangle Park, North Carolina: U.S. Environmental Protection Agency, 1983. pp. 5-9 to 5-44.

65. Energy Information Administration. *State Energy Data Report*. DOE/EIA-0214(90). Washington, D.C.: Office of Energy Markets and End Uses, 1992. pp. 31-32.

66. U.S. EPA. *Source Assessment: Residential Combustion of Coal*. Research Triangle Park, North Carolina: U.S. Environmental Protection Agency, Office of Energy, Minerals, and Industry, January 1979.

67. McCrillis, R.C., and R.R. Watts. *Analysis of Emissions from Residential Oil Furnaces*. Research Triangle Park, North Carolina: U.S. Environmental Protection Agency, Air and Energy Research Laboratory and Health Effects Research Laboratory, 1992. 92-110.06. pp. 1-9.

68. Energy Information Administration. *Fuel Oil and Kerosene Sales 1990*. DOE/EIA-00535(90). Washington, D.C.: Office of Oil and Gas, 1991. p. 11.

69. DeAngelis, D.G., and R.B. Reznik. *Source Assessment: Residential Combustion of Coal*. EPA-600/2-79-019a. Research Triangle Park, North Carolina: U.S. Environmental Protection Agency, Industrial Environmental Research Laboratory, 1979. p. 52.

70. Suprenant, N.F., R.R. Hall, K.T. McGregor, and A.S. Werner. *Emissions Assessment of Conventional Stationary Combustion Systems*, Volume 1: Gas- and Oil-fired Residential Heating Sources. Research Triangle Park, North Carolina: U.S. Environmental Protection Agency, Industrial Environmental Research Laboratory, 1979. pp. 19-20.

71. Ryan, J.V., and R.C. McCrillis. "Analysis of Emissions from Residential Natural Gas Furnaces." Report No. 94-WA75A.04. Paper presented at 87th Annual Meeting and Exhibition of the Air and Waste Management Association. Cincinnati, Ohio: June 19-24, 1994. pp. 2-9.

72. U.S. EPA. *Vermont Used Oil Analysis and Waste Oil Furnace Emissions Study*. Waterbury, Vermont: Vermont Agency of Natural Resources, Department of Environmental Conservation, Air Pollution Control Division and Hazardous Materials Division, September 1994

73. U.S. EPA. *Alternative Control Techniques Document - NO_x Emissions from Utility Boilers*. EPA-453/R-94-023. Research Triangle Park, North Carolina: U.S. Environmental Protection Agency, Office of Air Quality Planning and Standards, March 1994.

74. Shih, C.C. et al. *Emissions Assessment of Conventional Stationary Combustion Systems*, Volume III: External Combustion Sources for Electricity Generation. EPA-600/7-81-003a. Washington, D.C.: U.S. Environmental Protection Agency, Office of Research and Development, November 1980. pp. 455.

75. U.S. EPA. *Compilation of Air Pollutant Emission Factors*, 5th ed. (AP-42), Vol. I: Stationary Point and Area Sources, Section 1.1: Bituminous and Subbituminous Coal Combustion. Research Triangle Park, North Carolina: U.S. Environmental Protection Agency, Office of Air Quality Planning and Standards, 1995.

76. U.S. EPA. *Fossil Fuel Fired Industrial Boilers - Background Information*, Volume 1, Chapters 1 to 9. EPA-450/3-82-006a. Research Triangle Park, North Carolina: U.S. Environmental Protection Agency, March 1982.

77 U.S. EPA. *Population and Characteristics of Industrial/Commercial Boilers in the United States*. EPA-600/7-79-178a. Research Triangle Park, North Carolina: U.S. Environmental Protection Agency, Industrial Environmental Research Laboratory, August 1979. pp. 6-37.

78. U.S. EPA. *Compilation of Air Pollutant Emission Factors*, 5th ed. (AP-42), Vol. I: Stationary Point and Area Sources, Section. Section 1.6: Wood Waste Combustion in Boilers. Research Triangle Park, North Carolina: U.S. Environmental Protection Agency, Office of Air Quality Planning and Standards, 1995.

79. Buonicore, A.J. and W.T. Davis, eds. *Air Pollution Engineering Manual*. New York: Air and Waste Management Association, 1992. pp. 257-260.

80. U.S. EPA. *Compilation of Air Pollutant Emission Factors*, 5th ed. (AP-42), Vol. I: Stationary Point and Area Sources, Section. Section 1.11: Waste Oil Combustion. Research Triangle Park, North Carolina: U.S. Environmental Protection Agency, Office of Air Quality Planning and Standards, 1995.

81. NRDC. *Burning Used Oil-America's Undiscovered Lead Threat.* National Resources Defense Council, 1991.

82. U.S. Code of Federal Regulations. Title 40, Protection of the Environment, Part 261--Identification and Listing of Hazardous Waste, Subpart A--General, Section 261.6--Requirements for Recylcable Materials. Washington, D.C.: U.S. Government Printing Office, July 1994. p. 43.

83. U.S. Code of Federal Regulations. Title 40, Protection of the Environment, Part 279--Standards for the Management of Used Oil, Subpart A--Applicability, Section 279.11--Used Oil Specifications. Washington, D.C.: U.S. Government Printing Office, July 1994. p. 861.

84. U.S. Code of Federal Regulations. Title 40, Protection of the Environment, Part 279--Standards for the Management of Used Oil, Subpart C--Standards for Used Oil Generators, Section 279.23--On-Site Burning in Space Heaters. Washington, D.C.: U.S. Government Printing Office, July 1994. p. 863.

85. U.S. Code of Federal Regulations. Title 40, Protection of the Environment, Part 279--Standards for the Management of Used Oil, Subpart G--Standards for Used Oil Burners who Burn Off-Specification Used Oil for Energy Recovery. Washington, D.C.: U.S. Government Printing Office, July 1994. pp. 877 to 880.

86. U.S. EPA. *Compilation of Air Pollutant Emission Factors*, 5th ed. (AP-42), Vol. I: Stationary Point and Area Sources, Section. Section 1.6: Wood Waste Combustion in Boilers. Research Triangle Park, North Carolina: U.S. Environmental Protection Agency, Office of Air Quality Planning and Standards, 1996.

87. U.S. EPA. *Compilation of Air Pollutant Emission Factors*, 4th ed. (AP-42), Vol. I: Stationary Point and Area Sources, Supplement E, Section 1.6: Wood Waste Combustion in Boilers. Research Triangle Park, North Carolina: U.S. Environmental Protection Agency, Office of Air Quality Planning and Standards, 1992.

88. California Air Resources Board. *Results of Source Testing at a Power Production Facility*. Report No. ERC-83.

89. Timber Association of California (TAC). Source Emission Testing of the Wood-Fired Boiler "C" Exhaust at Pacific Timber, Scotia, California. Performed for the Timber Association of California. Galston Technical Services, February 1991.

90. Timber Association of California (TAC). Source Emission Testing of the Wood-Fired Boiler #3 Exhaust at Georgia Pacific, Fort Bragg, California. Performed for the Timber Association of California. Galston Technical Services, February 1991.

91. Timber Association of California (TAC). Source Emission Testing of the Wood-Fired Boiler at Catalyst Hudson, Inc, Anderson, California. Performed for the Timber Association of California. Galston Technical Services, February 1991.

92. Composite. Radian FIRE Database 1993 release.

93. California Air Resources Board. *Determination of AB 2588 emissions from wood-fired boiler exhaust*. Report No. ERC-63. February 10 - 13, 1992.

94. U.S. EPA. *Compilation of Air Pollutant Emission Factors*, 5th ed. (AP-42), Vol. I: Stationary Point and Area Sources, Section. Section 1.4: Natural Gas Combustion. Research Triangle Park, North Carolina: U.S. Environmental Protection Agency, Office of Air Quality Planning and Standards, 1996.

95. Cole, J. (Research Triangle Institute). Memorandum to W. Maxwell (U.S. Environmental Protection Agency, Emissions Standards Division, 1993).

96. U.S. EPA. *Compilation of Air Pollutant Emission Factors*, 5th ed. (AP-42), Vol. I: Stationary Point and Area Sources, Section. Section 1.2: Anthracite Coal Combustion. Research Triangle Park, North Carolina: U.S. Environmental Protection Agency, Office of Air Quality Planning and Standards, Updated October, 1996.

97. U.S. EPA. *Compilation of Air Pollutant Emission Factors*, 5th ed. (AP-42), Vol. I: Stationary Point and Area Sources, Section. Section 1.1: Bituminous and Subbituminous Coal Combustion. Research Triangle Park, North Carolina: U.S. Environmental Protection Agency, Office of Air Quality Planning and Standards, 1996.

98. U.S. EPA. *Project Summary: Environmental Assessment of a Commercial Boiler Fired with a Coal/Waste Plastic Mixture*. EPA-600/57-86-011. Research Triangle Park, North Carolina: U.S. Environmental Protection Agency, Air and Energy Engineering Research Laboratory, May 1986.

99. U.S. EPA. *Compilation of Air Pollutant Emission Factors*, 5th ed. (AP-42), Vol. I: Stationary Point and Area Sources, Section. Section 1.2: Anthracite Coal Combustion. Research Triangle Park, North Carolina: U.S. Environmental Protection Agency, Office of Air Quality Planning and Standards, 1995.

100. California Air Resources Board. *AB 2588 source test results for oil-fired industrial boilers*. Report No. ERC-73. September 24, 1991.

101. U.S. EPA. *Compilation of Air Pollutant Emission Factors*, 5th ed. (AP-42), Vol. I: Stationary Point and Area Sources, Section. Section 1.3: Fuel Oil Combustion. Research Triangle Park, North Carolina: U.S. Environmental Protection Agency, Office of Air Quality Planning and Standards, 1995.

102. U.S. EPA. *Compilation of Air Pollutant Emission Factors*, 5th ed. (AP-42), Vol. I: Stationary Point and Area Sources, Section. Section 1.3: Fuel Oil Combustion. Research Triangle Park, North Carolina: U.S. Environmental Protection Agency, Office of Air Quality Planning and Standards, 1996.

103. McDannel, M.D. and L.A. Green. *Air Toxics Emissions Inventory Testing at Alamitos Unit 5*. ESR 53304-2053. Rosemead, California: Southern California Edison Company, May 1990.

104. Hopkins, K.C. and L.A. Green. *Air Toxics Emissions Testing at Morro Bay Unit 3*. CR1109-2088. San Francisco, California: Pacific Gas and Electric Company, May 1990.

105. Factor Information Retrieval System Version 3.0 (FIRE 3.0), Record Number CRI_D_532. Research Triangle Park, North Carolina: U.S. Environmental Protection Agency, September 1994.

106. U.S. EPA. *Compilation of Air Pollutant Emission Factors*, 5th ed. (AP-42), Vol. I: Stationary Point and Area Sources, Section. Section 1.11: Waste Oil Combustion. Research Triangle Park, North Carolina: U.S. Environmental Protection Agency, Office of Air Quality Planning and Standards, 1996.

107. U.S. EPA. *Compilation of Air Pollutant Emission Factors*, 5th ed. (AP-42), Vol. I: Stationary Point and Area Sources, Section. Section 3.1: Stationary Gas Turbines for Electricity Generation. Research Triangle Park, North Carolina: U.S. Environmental Protection Agency, Office of Air Quality Planning and Standards, 1995.

108. Factor Information Retrieval System Version 3.0 (FIRE 3.0). Composite. Research Triangle Park, North Carolina: U.S. Environmental Protection Agency, Office of Air Quality Planning and Standards, September 1994.

109. California Air Resources Board. *Camden Resource Recovery Facility, Unit 1 stack emissions tests conducted on October 18, 1991*. Report No. ERC-107.

110. U.S. EPA. *Emissions Assessment of Conventional Stationary Combustion Systems*, Vol. II: Internal Combustion Sources. EPA-600/7-79-029c. Research Triangle Park, North Carolina: Industrial Environmental Research Laboratory, U.S. Environmental Protection Agency, February 1979.

111. U.S. EPA. *Compilation of Air Pollutant Emission Factors*, 5th ed. (AP-42), Vol. I: Stationary Point and Area Sources, Section. Section 3.3: Gasoline and Diesel Industrial Engines. Research Triangle Park, North Carolina: U.S. Environmental Protection Agency, Office of Air Quality Planning and Standards, 1995.

112. U.S. EPA. *Compilation of Air Pollutant Emission Factors*, 5th ed. (AP-42), Vol. I: Stationary Point and Area Sources, Section. Section 3.4: Large Stationary Diesel and All Stationary Dual Fuel Engines. Research Triangle Park, North Carolina: U.S. Environmental Protection Agency, Office of Air Quality Planning and Standards, 1995.

113. Imperial Irrigation District. Source Test Report AB2588. La Verne, California: South Coast Environmental Company, February 25, 1991.

114. U.S. EPA. *Compilation of Air Pollutant Emission Factors*, 5th ed. (AP-42), Vol. I: Stationary Point and Area Sources, Section. Section 2.1: Refuse Combustion. Research Triangle Park, North Carolina: U.S. Environmental Protection Agency, Office of Air Quality Planning and Standards, 1995.

115. U.S. EPA. *Emission Factor Documentation for AP-42*, Section 2.1, Refuse Combustion. Research Triangle Park, North Carolina: U.S. Environmental Protection Agency, Office of Air Quality Planning and Standards, May 1993.

116. Standards of Performance for New Stationary Sources, Municipal Waste Combustors, 54 FR 243 IV(f), December 20, 1989.

117. World Health Organization. *Emissions of Heavy Metal and PAH Compounds from Municipal Solid Waste Incinerators*. Control Technology and Health Effects. Copenhagen, Denmark: World Health Organization, Regional Office for Europe, 1988.

118. Standards for the Use or Disposal of Sewage Sludge: Final Rules, 58 FR 9248-9404, February 19, 1993.

119. U.S. EPA. *Locating and Estimating Air Toxics Emissions from Sewage Sludge Incinerators*. EPA-450/2-90-009. Research Triangle Park, North Carolina: U.S. Environmental Protection Agency, 1990.

120. U.S. EPA. *Compilation of Air Pollutant Emission Factors*, 5th ed. (AP-42), Vol. I: Stationary Point and Area Sources, Section. Section 2.2: Sewage Sludge Incineration. Research Triangle Park, North Carolina: U.S. Environmental Protection Agency, Office of Air Quality Planning and Standards, 1995.

121. U.S. EPA. *Compilation of Air Pollutant Emission Factors*, 5th ed. (AP-42), Vol. I: Stationary Point and Area Sources, Section. Section 2.3: Medical Waste Incineration. Research Triangle Park, North Carolina: U.S. Environmental Protection Agency, Office of Air Quality Planning and Standards, 1995.

122. Huffman, G.L. and C.C. Lee. Metal Behavior During Medical Waste Incineration. *ACS Symposium Series Clean Energy from Waste and Coal*, Chapter 15. August 1991. pp. 189-194.

123. DePieno, J. (Bureau of Enforcement Operations) and M. Pratt (State of New Jersey, Department of Environmental Protection). Memorandum concerning APC Plant No. 70010, Permit/Certificate to Operate - William B. Kessler Memorial Hospital, Hammonton, New Jersey. August 10, 1989.

124. U.S. Code of Federal Regulations. Title 40, Protection of the Environment, Part 261--Identification and Listing of Hazardous Waste, Subpart A--General. Washington, D.C.: U.S. Government Printing Office, July 1, 1994.

125. Oppelt, E.T. Incineration of Hazardous Waste - A Critical Review. *Journal of Air Pollution Control Association*. 37(5):558-586, May 1987.

126. Vogel, G., et al (Mitre Corp). *Composition of Hazardous Waste Streams Currently Incinerated*. U.S. Environmental Protection Agency, April 1983.

127. U.S. EPA. *List of Hazardous Waste Incinerators*, November 1994.

128. 40 CRF Parts 60, 63, 260, 261, 264, 265, 266, 270 and 271. Federal Register, Volume 61, No. 77. Hazardous Waste Combustors: Revised Standards; Proposed Rule, April 19, 1996.

129. U.S. EPA. *Permit Writer's Guide to Test Burn Data - Hazardous Waste Incineration*. EPA-625/6-86-012. Washington, D.C.: U.S. Environmental Protection Agency, Office of Research and Development, 1986.

130. Whitworth, W.E. and L.E. Waterland. *Pilot-Scale Incineration of PCB-Contaminated Sediments from the Hot Spot of the New Bedford Harbor Superfund Site*. Jefferson, Arkansas: Acurex Corporation, January 1992.

131. U.S. EPA. *Estimating Exposure to Dioxin-like Compounds*, Vol. II: Properties, Sources, Occurrence, and Background Exposure. EPA-600/6-88-005Cb. Washington, D.C.: U.S. Environmental Protection Agency, June 1994.

132. Myers Container Corp. *Source Emission Test Results for Drum Furnace/Afterburner*. Emeryville, California: Myers Container Corp., October, 1991.

133. U.S. EPA *National Dioxin Study Tier 4- Combustion Sources:* Final Test Report Site 11 Drum and Barrel Reclamation Furnace DBR-A. EPA-450/4-8-0144. Research Triangle Park, North Carolina: U.S. Environmental Protection Agency, 1987.

134. U.S. EPA. *Summary of Markets for Scrap Tires*. EPA/530-SW-90-074b. Washington, D.C.: U.S. Environmental Protection Agency, Office of Solid Waste, 1992.

135. U.S. EPA. *Burning Tires for Fuel and Tire Pyrolysis: Air Implications*. EPA-450/3-91-024. Research Triangle Park, North Carolina: U.S. Environmental Protection Agency, Office of Air Quality Planning and Standards, December 1991. pp. 3-1 to 3-21.

136. Lemieux, P.M. and J.V. Ryan. Characterization of Air Pollutants Emitted from a Simulated Scrap Tire Fire. *Journal of the Air and Waste Management Association*, 43(#)pp. 1106-1115, August 1993.

137. U.S. EPA. *Compilation of Air Pollutant Emission Factors*, 5th ed. (AP-42), Vol. I: Stationary Point and Area Sources, Section. Section 2.5: Open Burning. Research Triangle Park, North Carolina: U.S. Environmental Protection Agency, Office of Air Quality Planning and Standards, 1995.

138. Cremation Association of North America. Cremation Statistics. *Cremationist*. Chicago, Illinois: Cremation Association of North America, 1993.

139. Springer, J.M. (Executive Director, Cremation Association of North America). Personal correspondence to Dennis Beauregard (Emission Factor Inventory Group, U.S. Environmental Protection Agency). January 31, 1996.

140. California Air Resources Board. *Emissions Testing of a Propane-Fired Incinerator at a Crematorium*. Report No. ERC-39.

141. U.S. EPA. *Pulp, Paper, and Paperboard Industry--Background Information for Proposed Air Emission Standards: Manufacturing Processes at Kraft, Sulfite, Soda, and Semi-Chemical Mills*. EPA-453/R-93-050a. Research Triangle Park, North Carolina: U.S. Environmental Protection Agency, Office of Air Quality Planning and Standards, Emission Standards Division, October 1993. pp. 2-1 to 2-22.

142. Air and Waste Management Association. *Air Pollution Engineering Manual*. Chapter 18: Wood Processing Industry. New York, New York: Van Nostrand Reinhold, 1992.

143. Dyer, H., S. Gajita, and M. Fennessey. *1992 Lockwood-Post's Directory of the Pulp, Paper and Allied Trades*. San Francisco, California: Miller Freeman Publications, 1991.

144. Dyer, H., S. Gajita, and M. Fennessey, 1997. *1997 Lockwood-Post's Director of the Pulp, Paper and Allied Trades.* San Francisco, California: Miller Freeman Publications, 1997.

145. U.S. EPA. *Compilation of Air Pollutant Emission Factors*, 5th ed. (AP-42), Vol. I: Stationary Point and Area Sources, Section. Section 10.2: Chemical Wood Pulping. Research Triangle Park, North Carolina: U.S. Environmental Protection Agency, Office of Air Quality Planning and Standards, 1995.

146. Radian Corporation. *Pulp and Paper Industry Training Session Notes*. Research Triangle Park, North Carolina: Radian Corporation, 1993.

147. Someshwar, A. (NCASI). Memorandum to Dennis Beauregard (U.S. EPA, OAQPS) concerning NCASI emissions data. March 15, 1996.

148. Someshwar, A. (NCASI). Memorandum to Jack Johnson (Radian International) concerning NCASI emissions data. May 15, 1996.

149. U.S. EPA. *Environmental Pollution Control--Pulp and Paper Industry*, Part 1: Air. EPA-625/7-76-001. Research Triangle Park, North Carolina: U.S. Environmental Protection Agency, Emission Standards Division, October 1976. pp. 11-1 to 11-11.

150. NCASI. *Compilation of Air Toxic Emission Data for Boilers, Pulp Mills, and Bleach Plants*, Technical Bulletin No. 650. New York, New York: National Council of the Paper Industry for Air and Stream Improvement, June 1993.

151. ECOSERVE. *Pooled Air Toxics Source Test Program for Kraft Pulp Mills*, Report No. 2, Simpson Paper Company, Anderson, California. Report No. 1249A. ECOSERVE, Inc., Environmental Services, November 27, 1990.

152. Smook, G.A. *Handbook for Pulp and Paper Technologists*. Atlanta, Georgia: TAPPI, 1989. pp. 148-150.

153. Portland Cement Association. *U.S. and Canadian Portland Cement Industry: Plant Information Summary*. Skokie, Illinois: Portland Cement Association, 1991.

154. Greer, W.L. (Ash Grove Cement Company, Overland Park, Kansas). Information and data submitted through PSM International Inc., Dallas, Texas, to Anne Pope, Technical Support Division, Office of Air Quality Planning and Standards, U.S. Environmental Protection Agency, Research Triangle Park, North Carolina, February 21, 1993 and May 3, 1993.

155. U.S. EPA. *Compilation of Air Pollutant Emission Factors*, 5th ed. (AP-42), Vol. I: Stationary Point and Area Sources, Section. Section 11.6: Portland Cement Manufacturing. Research Triangle Park, North Carolina: U.S. Environmental Protection Agency, Office of Air Quality Planning and Standards, 1995.

156. Smith, G. (Bureau of Mines, Department of Interior) and Norris, C. (Radian Corporation). Teleconference concerning lead consumption data for glass and ceramics. March 24, 1995.

157. OECD. *Workshop on Lead Products--Session G: Crystal Ware*. Toronto, Canada: Organization for Economic Co-operation and Development, September 14, 1994. pp. 36-38.

158. OECD. *Risk Reduction Monograph No. 1: Lead*. Paris, France: Environment Directorate, Organization for Economic Co-operation and Development, 1993. p. 54.

159. U.S. EPA. *1992 Toxic Chemical Release Inventory (SARA Title 313) Database*. Washington, D.C.: U.S. Environmental Protection Agency, Office of Toxic Substances, 1992.

160. U.S. EPA. *Compilation of Air Pollutant Emission Factors*, 5th ed. (AP-42), Vol. I: Stationary Point and Area Sources, Section. Section 11.15: Glass Manufacturing. Research Triangle Park, North Carolina: U.S. Environmental Protection Agency, Office of Air Quality Planning and Standards, 1995.

161. Elvers, B., et al., eds. *Ullmann's Encyclopedia of Industrial Chemistry*. Volume A12: Formamides to Hexamethylenediamine. Federal Republic of Germany: VCH, 1989. pp. 413 to 414.

162. Timofeeva, I.T., M.V. Shapilova, and N.A. Pankova. Ecological Assessment of Noxious Discharges During Melting of Lead Crystal. *Glass & Ceramics*. 1990(47):11-12.

163. U.S. EPA. *Evaluation of Techniques for Controlling Lead Emissions*, Unpublished Draft. Research Triangle Park, North Carolina: U.S. Environmental Protection Agency, Emissions Standards Division, Office of Air Quality Planning and Standards, 1990.

164. U.S. EPA. *1993 Toxic Chemical Release Inventory (SARA Title 313) Database*. Washington D.C.: U.S. Environmental Protection Agency, Office of Toxic Substances, 1993.

165. U.S. EPA. *Review of New Source Performance Standards for Lead-Acid Battery Manufacture*, Preliminary Draft. Research Triangle Park, North Carolina: U.S. Environmental Protection Agency, Office of Air Quality Planning and Standards, October 1989.

166. U.S. EPA. *Compilation of Air Pollutant Emission Factors*, 5th ed. (AP-42), Vol. I: Stationary Point and Area Sources, Section. Section 12.15: Storage Battery Production. Research Triangle Park, North Carolina: U.S. Environmental Protection Agency, Office of Air Quality Planning and Standards, 1995.

167. Smith, Gerald R., *Minerals Yearbook: Volume I- Metals and Minerals.* U.S. Geological Survey- Minerals Information, 1997.

168. U.S. EPA. *Lead Acid Battery Manufacture - Background Information for Proposed Standards*. EPA-450/3-79-028a. Research Triangle Park, North Carolina: U.S. Environmental Protection Agency, November 1979.

169. SRI. *1994 Directory of Chemical Producers--USA*. Menlo Park, California: SRI International, 1994.

170. *Thomas Register of American Manufacturers*. 82nd ed, Vol. 8. Products and Services Section. New York, New York: Thomas Publishing Company 1992. p. 14899.

171. *OPD Chemical Buyers Directory*. 81st ed. New York, New York: Schnell Publishing Company, 1994.

172. OECD. *Country Tables: Lead*. United States. Paris, France: Organization of Economic Co-operation and Development, 1992.

173. U.S. EPA. *Control Techniques for Lead Air Emissions* - Volume II, Chapter 4--Appendix B. EPA-450/2-77-012. Research Triangle Park, North Carolina: U.S. Environmental Protection Agency, December 1977. pp. 4-273 to 4-290.

174. U.S. EPA. *Compilation of Air Pollutant Emission Factors*, 5th ed. (AP-42), Vol. I: Stationary Point and Area Sources, Section. Section 12.17: Miscellaneous Lead Products. Research Triangle Park, North Carolina: U.S. Environmental Protection Agency, Office of Air Quality Planning and Standards, 1995.

175. International Lead Zinc Research Organization, Inc. -- Study Group. *Lead and Zinc Statistics*. London, England, June 1997.

176. Goodwin, F.E. *Recent Technological Developments for Lead Sheathed Cables*. Chicago, Illinois: 13th IEEE/PES Transmission and Distribution Conference and Exposition, April 1994.

177. U.S. EPA. *Compilation of Air Pollutant Emission Factors*, 5th ed. (AP-42), Vol. I: Stationary Point and Area Sources, Section. Section 11.14: Frit Manufacturing. Research Triangle Park, North Carolina: U.S. Environmental Protection Agency, Office of Air Quality Planning and Standards, 1995.

178. Phelps, G.W. Ceramics, General Survey. *Ullmann's Encyclopedia of Industrial Chemistry*, 5th ed., Volume A6. 1986. p. 32.

179. OECD. *Workshop on Lead Products--Session C: Ceramic Ware*. Toronto, Canada: Organization of Economic Co-operation and Development, September 15, 1994. pp. 16-19.

180. FDA. *Reducing Exposure to Lead from Ceramic Ware*. Washington, D.C.: Food and Drug Administration, November 1991.

181. American Ceramic Society, Inc. *Ceramic Source, 1990-1991*. Vol. 6. Annual Company Directory and Buyer's Guide. Westerville, Ohio: American Ceramic Society, Inc., 1990.

182. Eppler, Richard, Ph.D. Letter to Dennis Beauregard, EPA. Comments on draft report, Locating and estimating air emissions of lead and lead compounds (August 1996).

183. *Thomas Register of American Manufacturers, 1992*, 82nd ed, Vol. 5: Products and Services Section. New York, New York: Thomas Publishing Company, 1992. p. 8945.

184. Mannington Ceramic Tile, Inc. *Source Test Report*. Lexington, North Carolina: Entropy Environmentalists, Inc., September 20, 1989.

185. Hansen, L. Dry Scrubbing Controls Kiln Emissions. *American Ceramic Society Bulletin*. 73(7):60-63, July 1994.

186. Yamashita, Y. PZN-Based Relaxors for MLCCs. *American Ceramic Society Bulletin*. 73(8):74-80, August 1994.

187. Lead Fishing Sinkers; Response to Citizen's Petition and Proposed Ban, 59 FR 11122-11143, March 9, 1994.

188. Byrne, Robert, Letter to Dennis Beauregard, EPA. Comments on draft report, Locating and Estimating Air Emissions of Lead and Lead Compounds. 1996.

189. U.S. EPA. *Lead Source Targeting: Produce Data & Graphics for a Specific Group of Source Categories*, Final Report. Research Triangle Park, North Carolina: U.S. Environmental Protection Agency, Air Quality Management Division, December 30, 1993.

190. U.S. EPA. *Compilation of Air Pollutant Emission Factors*, 5th ed. (AP-42), Vol. I: Stationary Point and Area Sources, Section. Section 11.31: Bonded Adhesive Products. Research Triangle Park, North Carolina: U.S. Environmental Protection Agency, Office of Air Quality Planning and Standards, 1995.

191. Wayne County Department of Health. *Source Test, Detroit News*. Detroit, Michigan: Wayne County Department of Health, Air Pollution Control Division, 1970.

192. San Francisco Newspaper Printing Company. *Source Test*. San Francisco, California: San Francisco Newspaper Printing Company, April 13-14, 1975.

193. International Lead Zinc Research Organization, Inc. *Lead and Zinc Statistics*. Research Triangle Park, North Carolina, 1992.

194. U.S. EPA. *Atmospheric Emissions from Lead Typesetting Operation Screening Study*. EPA Contract No. 68-02-2085. Cincinnati, Ohio: U.S. Environmental Protection Agency, January 1976.

195. Reese, Ken. Getting the Lead Out. *Today's Chemist at Work*. 4(3):61-62. March 1995.

196. Hester, C. (Midwest Research Institute), D. Michelitsch (Emission Standard Division, U.S. EPA). *Assessment of Lead Emissions from the Manufacture of Solder*. EPA Contract 68-02-4379. ESD Project 88/93. Research Triangle Park, North Carolina: U.S. Environmental Protection Agency, May 5, 1989.

197. MRI. *Assessment of Lead Emissions from the Manufacture of Solder*, Interim Report. Cary, North Carolina: Midwest Research Institute, March 31, 1989.

198. Electrum Recovery Works, Inc. *Stack Test Report*. Rahway, New Jersey: Electrum Recovery Works, Inc., September 4, 1990.

199. *Metal Finishing*, Guidebook and Directory Issue. New York, New York: Elseveir Science Publishing Company. 91(1A):781, January 1993.

200. U.S. EPA. *Locating and Estimating Air Emissions from Sources of Cadmium*. EPA-454/R-93-040. Research Triangle Park, North Carolina: U.S. Environmental Protection Agency, 1993.

201. U.S. EPA. *Report of the National Technical Forum on Source Reduction of Heavy Metals in Municipal Solid Waste*. EPA 901/R-93-001. Boston, Massachusetts: U.S. Environmental Protection Agency, Waste Management Division, Region 1 (HER-CANG), September 1993.

202. Hirsh, S. Tin-Lead, Lead, and Tin Plating. *Metal Finishing*, Guidebook and Directory Issue. 91(1A):263-268, January 1993.

203. Ringwood, R. Stabilizers. *Modern Plastics Mid-October Encyclopedia Issue*. 67(11):212-216, 1990.

204. Additives. *Modern Plastics*. Vol(No):313-314, December 1992.

205. Franklin Associates. *Characterization of Products Containing Lead and Cadmium in Municipal Solid Waste in the United States, 1970 to 2000*. Pre-Publication Draft. EPA/530-SW-89-15a. Washington, D.C.: U.S. Environmental Protection Agency, January 1989.

206. Polyvinyl Chloride. *Chemical Products Synopsis*. Asbury Park, New Jersey: Mannsville Chemical Products Corporation, 1993.

207. Stabilizer Chart. *Modern Plastics Mid-October Encyclopedia Issue*. 67(11):583-858, 589, 1990.

208. Heat Stabilizers: Move Intensifies to Modify Hazardous Formulations. *Modern Plastics.* Vol(No): 61-63, September 1992.

209. Carr, D.S. Lead Compounds. *Ullmann's Encyclopedia of Industrial Chemistry*, 5th ed. Volume A16. B. Elvers, S. Hawkins, G. Schulz, eds., 1986.

210. *U.S. EPA. Second Review of New Source Performance Standards for Asphalt Concrete Plants.* EPA-450/3-85-024. Research Triangle Park, North Carolina: U.S. Environmental Protection Agency, Office of Air Quality Planning and Standards, October 1985.

211. U.S. EPA. *Compilation of Air Pollutant Emission Factors*, 5th ed. (AP-42), Vol. I: Stationary Point and Area Sources, Section. Chapter 11: Mineral Products Industry. Research Triangle Park, North Carolina: U.S. Environmental Protection Agency, Office of Air Quality Planning and Standards, 1995. pp. 11.1-1 to 11.1-5 and 11.2-1 to 11.2-5.

212. U.S. EPA. *Compilation of Air Pollutant Emission Factors*, 5th ed. (AP-42), Vol. I: Stationary Point and Area Sources, Section. Section 11.1: Hot Mix Asphalt Plants. Research Triangle Park, North Carolina: U.S. Environmental Protection Agency, Office of Air Quality Planning and Standards, 1995. pp. 11.1-17.

213. Franklin Associates. *Characterization of Products Containing Lead and Cadmium in Municipal Solid Waste in the United States, 1970 to 2000*. Pre-Publication Draft. EPA/530-SW-89=15a. Washington,D.C.: U.S. Environmental Protection Agency, January 1989. pp. 91-105.

214. Eureka Laboratories, Inc. *Compilation of Air Toxics Pollutant Emission Factors*, Volume IIB: Technical Support Information, Asphalt Concrete Plants, 1991 Edition. Appendix E, Plant 50. California: Central Valley Rock, Sand & Gravel Association, January 1991.

215. California Air Resources Board. *Source Emissions Testing of a Dryer*. Report No. ERC-11.

216. California Air Resources Board. *Source Emissions Testing of a Dryer*. Report No. ERC-12.

217. OECD. *Workshop on Lead Products--Session E: Paint/Ink*. Toronto, Canada: Organization for Economic Co-operation and Development, September 14, 1994. pp. 24-28.

218. Lombard, J. and B. Cook (Principal Investigators). *Proposed Identification of Inorganic Lead as a Toxic Contaminant*, Part A: Exposure Assessment. Technical Support Document. Sacramento, California: California Air Resources Board, Stationary Source Division, August 1993.

219. Salmon, D. (OAQPS/EPA) and C.E. Norris (Radian Corporation). Teleconference concerning the use of leaded paint in surface coating applications. March 23, 1995.

220. Air & Waste Management Association. *Air Pollution Engineering Manual*, A.J. Buonicore and W. Davis, eds. New York, New York: Van Nostrand Reinhold, 1992. pp. 361-362.

221. U.S. Air Force. *Characterization of Emissions Resulting from Thermal Treatment of Selected Explosive Munitions*. U.S. Army Dugway Proving Ground Bangbox Study. U.S. Air Force Air Combat Command, January 1994.

222. U.S. Army. *Development of Methodology and Technology for Identifying and Quantifying Emission Products from Open Burning and Open Detonation Thermal Treatment Methods*, Bangbox Test Series. U.S. Army Armament, Munitions, and Chemical Command, January 1992.

223. Juhasz, A.A. (Ballistic Research Laboratories) and Law Enforcement Standards Laboratory. *The Reduction of Airborne Lead in Indoor Firing Ranges by Using Modified Ammunition*. November, 1977.

224. UTC. *Emissions Monitoring*. United Technologies Corporation, Chemical Systems Division, June 1991.

225. Franklin Associates. *Characterization of Products Containing Lead and Cadmium in Municipal Solid Waste in the United States, 1970 to 2000*. Pre-Publication Draft. EPA/530-SW-89=15a. Washington,D.C.: U.S. Environmental Protection Agency, January 1989. pp. 115-120.

226. Gordon, S. Colorants. *Modern Plastics* Mid-October Encyclopedia Issue. New York, New York: McGraw Hill, October 1990. 67(11):167-170.

227. Greninger, D., V. Kollenitsch, and C.H. Kline (Charles H. Kline & Co., Inc.). *Lead Chemicals*. New York, New York: International Lead Zinc Research Organization (ILZRO), 1975. pp. 59 to 60.

228. U.S. EPA. *Locating and Estimating Air Emissions from Sources of 1,3-Butadiene*, Revised. EPA-450/2-89-021. Research Triangle Park, North Carolina: U.S. Environmental Protection Agency, Emissions Inventory Branch, September 1994.

229. Brady, G.S. and H.R. Clauser. *Materials Handbook*. New York, New York: McGraw Hill, Inc., 1991.

230. Owen, K., and T. Coley. *Automotive Fuels Handbook*. Warrendale, Pennsylvania: Society of Automotive Engineers, Inc., 1990.

231. Prohibition on Gasoline Containing Lead or Lead Additives for Highway Use, Draft Final Rule, 61 FR 3832-3838, February 2, 1996.

232. Vitas, J. (Alliance Technologies Corporation) and A. Pagano (E.I. DuPont de Nemours). Telecon concerning plants that manufacture alkylated lead compound in the United States and alkylated lead compounds imported into the United States. March 26, 1992.

233. Vitas, J. (Alliance Technologies Corporation) and E. Williams (Texas Air Control Board). Telecon concerning plants that manufacture alkylated lead compound in the United States. March 26, 1992.

234. Billings, R. (Radian) and J. Selsinger (E.I. DuPont De Nemours, Inc.). Telecon concerning plants that manufacture alkylated lead compounds in the United States and alkylated lead compounds imported into the United States. May 2, 1995.

235. Vitas, J. (Alliance Technologies Corporation) and K. Darmer (Shell Oil). Telecon concerning alkylated lead compounds imported into the United States and the transportation and blending of alkylated lead compounds with gasoline. March 31, 1992.

236. Vitas, J. (Alliance Technologies Corporation) and J. Caldwell (U.S. Environmental Protection Agency, Office of Mobile Sources). Telecon concerning alkylated lead compounds imported into the United States. March 31, 1992.

237. U.S. EPA. Part 5 MOBILE Model. Ann Arbor, Michigan: U.S. Environmental Protection Agency, Office of Mobile Sources, 1993.

238. U.S. Department of Energy. *Petroleum Supply Annual*. Washington D.C.: U.S. Department of Energy, Energy Information Administration, 1981 to 1993.

239. TRC Environmental Corporation. *Estimation of Alkylated Lead Emissions*, Final Report. Prepared for the U.S. Environmental Protection Agency, Office of Air Quality Planning and Standards. Research Triangle Park, North Carolina, 1993.

240. Vitas J. (Alliance Technologies Corporation) and S. Green (Dunaway & Cross). Telecon concerning the status of unleaded gasoline used by aircraft. May 11, 1992.

241. U.S. Department of Energy. *The Motor Gasoline Industry: Past, Present, and Future*. Washington D.C.: U.S. Department of Energy, Energy Information Administration, 1991.

242. Energy and Environmental Analysis, Inc. *Supplementary Guidelines for Lead Implementation Plans, Updated Projections for Motor Vehicles Lead Emissions*. EPA-460/3-85-006. Ann Arbor, Michigan: U.S. Environmental Protection Agency, 1985.

243. Carey, P.N. *Supplementary Guidelines for Lead Implementation Plans, Updated Projections for Motor Vehicles Lead Emissions*. EPA-450/2-83-002. Ann Arbor, Michigan: U.S. Environmental Protection Agency, 1983.

244. Chamberlain, A.C. Fallout of Lead and Uptake by Crops. *Atmospheric Environment*. 17(4):15, 1983.

245. Deroanne-Bauvin, J., J. Delcarte, and R. Impens. Monitoring of Lead Deposition Near Highways: A Ten Year Study. *The Science of the Total Environment*. 59(1987):257-266.

246. Harrison, R., W.R. Johnson, J.C. Ralph, and S.J. Wilson. The Budget of Lead, Copper and Cadmium for a Major Highway. *The Science of the Total Environment*. 46(1985):137-145.

247. Rice, P. Lead Emission Rates from Gasoline Engines -- A Legislative and In-use Emission Rate Study of U.K. and U.S. to 1990. *Transportation Planning and Technology*. 9:37-45, 1984.

248. Tjell, J.C., M.F. Hovmand, and H. Mosbaek. Atmospheric Lead Pollution of Grass Grown in a Background Area in Denmark. *Nature*, 280(2):425-426, August 1979.

249. Marinshaw, R. and D. Wallace (MRI). *Estimating and Controlling Fugitive Lead Emissions from Industrial Sources*. Research Triangle Park, North Carolina: U.S. Environmental Protection Agency, Office of Air Quality Planning and Standards, 1990.

250. U.S. Code of Federal Regulations. Title 40, Protection of the Environment, Part 50, Appendix G: *Reference Method for the Determination of Lead in Suspended Particulate Matter Collected from Ambient Air*. Washington D.C.: U.S. Government Printing Office, 1987. p. 770.

251. U.S. EPA. *Methodology for the Determination of Metals Emissions in Exhaust Gases from Hazardous Waste Incineration and Similar Combustion Sources*, 3rd ed., Test Methods for Evaluating Solid Waste: Physical/Chemical Methods, Method 12. SW-846. Washington, D.C.: Office of Solid Waste and Emergency Response, U.S. Environmental Protection Agency, September 1988.

252. U.S. Code of Federal Regulations. Title 40, Protection of the Environment, Part 60--Standards of Performance for New Stationary Sources, Appendix A: *Determination of Metals Emissions from Stationary Sources*, Method 29. Washington, D.C.: U.S. Government Printing Office.

253. U.S. EPA. *APTI Course 435 Atmospheric Sampling*, Student Manual. EPA 450/2-80-004. Research Triangle Park, North Carolina: U.S. Environmental Protection Agency, September 1980. pp. 4-38 and 4-51.

254. U.S. Code of Federal Regulations. Title 40, Protection of the Environment, Part 58, Subpart B: *Monitoring Criteria*. Washington D.C.: U.S. Government Printing Office, 1990. pp. 130 and 131.

255. Tomey M. (Radian Corporation). *Validation of Draft Method 29 at a Municipal Waste Combustor*, Draft Final Report. Research Triangle Park, North Carolina: U.S. Environmental Protection Agency, Office of Air Quality Planning and Standards, Emission Measurements Branch, September 30, 1992.

256. U.S. EPA. *Test Methods for Evaluating Solid Waste*, 3rd ed., Volume 1A: Laboratory Manual, Physical/Chemical Methods, Method 7420. SW-846. Washington, D.C.: U.S. Environmental Protection Agency, Office of Solid Waste and Emergency Response, November 1986. pp. 7420-1 to 7420-4.

257. U.S. EPA. *Test Methods for Evaluating Solid Waste*, 3rd ed., Volume 1A: Laboratory Manual, Physical/Chemical Methods, Method 7421. SW-846. Washington, D.C.: U.S. Environmental Protection Agency, Office of Solid Waste and Emergency Response, November 1986. pp. 7421-1 to 7421-5.

258. U.S. EPA. *Test Methods for Evaluating Solid Waste*, 3rd ed., Volume 1A: Laboratory Manual, Physical/Chemical Methods, Method 6010A. SW-846. Washington, D.C.: U.S. Environmental Protection Agency, Office of Solid Waste and Emergency Response, November 1986. pp. 6010A-1 to 6010A-16.

259. U.S. EPA. *ICCR Inventory Database Version 3.0*. Office of Air Quality Planning and Standards. ICCR Internet Website: www.epa.gov/ttn/iccr/ic16.html. March 12, 1998.

APPENDIX A

EMISSION FACTOR SUMMARY TABLE

TABLE A-1. SUMMARY OF EMISSION FACTORS BY SOURCE CLASSIFICATION CODES

SCC/AMS Code	Description	Emission Source	Control Device	Emission Factor English (Metric)	Factor Rating
3-03-010-02	Primary Lead Smelting	Blast Furnace	None	1.0×10^{-4} lb/ton (5.0×10^{-5} kg/Mg)	U
			Baghouse	6.7×10^{-2} lb/ton (3.4×10^{-2} kg/Mg)	E
			Spray Tower/FF	1.7×10^{-2} lb/ton (8.5×10^{-3} kg/Mg)	U
3-03-010-04	Primary Lead Smelting	Ore Crushing	None	3.0×10^{-1} lb/ton (1.5×10^{-1} kg/Mg)	U
			Baghouse	2.0×10^{-3} lb/ton (1.0×10^{-3} kg/Mg)	E
3-03-010-25	Primary Lead Smelting	Sinter Machine Leakage	ESP/Scrubber	3.2×10^{-2} lb/ton (1.6×10^{-2} kg/Mg)	E
3-03-010-28	Primary Lead Smelting	Tetrahedrite Drier	Baghouse	6.0×10^{-4} lb/ton (3.0×10^{-4} kg/Mg)	E
3-03-010-29	Primary Lead Smelting	Sinter Machine (weak gas)	ESP/Scrubber	1.9×10^{-2} lb/ton (9.5×10^{-3} kg/Mg)	E
3-03-010-32	Primary Lead Smelting	Ore Screening	Baghouse	2.0×10^{-3} lb/ton (1.0×10^{-3} kg/Mg)	E
3-04-004-03	Secondary Lead Smelting	Blast Furnace (Cupola)	None	1.04×10^{2} lb/ton (5.2×10^{1} kg/Mg)	C
			Wet Scrubber/FF/ Cyclone/Settling Chamber/Demister	2.9×10^{-1} (1.5×10^{-1})	C
3-04-004-04	Secondary Lead Smelting	Rotary Sweating Furnace	None	---	E
			Baghouse	2.8×10^{-2} lb/ton (1.4×10^{-2} kg/Mg)	D

TABLE A-1. SUMMARY OF EMISSION FACTORS BY SOURCE CLASSIFICATION CODES (CONTINUED)

SCC/AMS Code	Description	Emission Source	Control Device	Emission Factor English (Metric)	Factor Rating
3-04-004-04	Secondary Lead Smelting (continued)		Baghouse/scrubber	1.9×10^{-2} lb/ton (9.5×10^{-3} kg/Mg)	D
3-04-004-13	Secondary Lead Smelting	Smelting Furnace Fugitives	None	---	E
			Baghouse	1.2×10^{-2} lb/ton (6.0×10^{-3} kg/Mg)	U
3-04-004-02	Secondary Lead Smelting	Reverberatory Furnace	None	6.5×10^{1} lb/ton (3.3×10^{-1} kg/Mg)	C
3-04-004-26	Secondary Lead Smelting	Kettle Refining	None	1.0×10^{-2} lb/ton (6.0×10^{-3} kg/Mg)	C
3-04-004-14	Secondary Lead Smelting	Kettle Refining Fugitives	None	6.00×10^{-4} lb/ton (3.00×10^{-4} kg/Mg)	E
			Afterburner/FF/ Venturi Scrubber/ Demister	2.4 lb/ton (1.2 kg/Mg)	
3-04-004-09	Secondary Lead Smelting	Casting	None	1.0×10^{-2} lb/ton (5.0×10^{-3} kg/Mg)	C
3-04-004-25	Secondary Lead Smelting	Casting Fugitives	None	7.0×10^{-4} lb/ton (3.5×10^{-4} kg/Mg)	E
3-03-005-03	Primary Copper Smelting Facilities	Converter	None	2.70×10^{-1} lb/ton (0.135 kg/Mg)	C
3-04-002-42	Secondary Copper Smelting Facilities	Reverberatory Furnace [charge with other alloy (7%)]	None	5.0 lb/ton (2.5 kg/Mg)	B
3-04-002-43	Secondary Copper Smelting Facilities	Reverberatory Furnace [charge with high lead (58%)]	None	5.0×10^{1} lb/ton (2.5×10^{1} kg/Mg)	B
3-04-002-44	Secondary Copper Smelting Facilities	Reverberatory Furnace (charge with red/yellow brass)	None	1.32×10^{1} lb/ton (6.6 kg/Mg)	B
3-04-002-xx	Secondary Copper Smelting Facilities	Secondary Copper - smelting	Baghouse	1.00×10^{-3} lb/ton (5.00×10^{-4} kg/Mg)	B

TABLE A-1. SUMMARY OF EMISSION FACTORS BY SOURCE CLASSIFICATION CODES (CONTINUED)

SCC/AMS Code	Description	Emission Source	Control Device	Emission Factor English (Metric)	Factor Rating
3-04-001-09	Secondary Aluminum Production	Burning/Drying	Venturi Scrubber	4.36×10^{-3} lb/ton (2.18×10^{-3} kg/Mg)	U
			Baghouse	1.04×10^{-5} lb/ton (5.18×10^{-6} kg/Mg)	U
			Multiple Cyclones	2.16×10^{-2} lb/ton (1.08×10^{-2} kg/Mg)	U
3-04-001-14	Secondary Aluminum Production	Reverberatory Furnace	Baghouse	1.4×10^{-3} lb/ton (7.0×10^{-4} kg/Mg)	D
3-04-003-01	Iron and Steel Foundries	Iron Foundry - Cupola	None	---	B
			Afterburner/ Venturi Scrubber	1.56×10^{-3} lb/ton (7.80×10^{-4} kg/Mg)	U
			Baghouse	2.67×10^{-3} lb/ton (1.34×10^{-3} kg/Mg)	U
3-04-003-02	Iron and Steel Foundries	Iron Foundry - Reverberatory Furnace	None	---	B
3-04-003-03	Iron and Steel Foundries	Iron Foundry - Electric Induction Furnace	None	---	B
3-04-003-20	Iron and Steel Foundries	Iron Foundry - Casting	Afterburner/ Venturi Scrubber	4.80×10^{-3} lb/ton (2.40×10^{-3} kg/Mg)	U
3-03-031-01	Leadbearing Ore Crushing & Grinding	Lead Ore (5.1% Pb content)	None	3.00×10^{-1} lb/ton (1.50×10^{-1} kg/Mg)	B
3-03-031-02	Leadbearing Ore Crushing & Grinding	Zinc Ore (0.2% Pb content)	None	1.20×10^{-2} lb/ton (6.00×10^{-3} kg/Mg)	B
3-03-031-03	Leadbearing Ore Crushing & Grinding	Copper Ore (0.2% Pb content)	None	1.20×10^{-2} lb/ton (6.00×10^{-3} kg/Mg)	B
3-03-031-04	Leadbearing Ore Crushing & Grinding	Lead-Zinc Ore (2.0% Pb content)	None	1.20×10^{-1} lb/ton (6.00×10^{-2} kg/Mg)	B

TABLE A-1. SUMMARY OF EMISSION FACTORS BY SOURCE CLASSIFICATION CODES (CONTINUED)

SCC/AMS Code	Description	Emission Source	Control Device	Emission Factor English (Metric)	Factor Rating
3-03-031-05	Leadbearing Ore Crushing & Grinding	Copper-Lead Ore (2.0% Pb content)	None	1.20×10^{-1} lb/ton (6.00×10^{-2} kg/Mg)	B
3-03-031-06	Leadbearing Ore Crushing & Grinding	Copper-Zinc Ore (0.2% Pb content)	None	1.20×10^{-2} lb/ton (6.00×10^{-3} kg/Mg)	B
3-03-031-07	Leadbearing Ore Crushing & Grinding	Copper-Lead-Zinc Ore (2.0% Pb content)	None	1.20×10^{-1} lb/ton (6.00×10^{-2} kg/Mg)	B
A21-04-002-000	Residential Coal Combustion	Bituminous/ Subbituminous Coal - All Combustor Types	None	2.00×10^{-2} lb/ton (1.00×10^{-2} kg/Mg)	U
A21-04-001-000	Residential Coal Combustion	Anthracite Coal - All Combustor Types	None	1.60×10^{-2} lb/ton (8.00×10^{-3} kg/Mg)	U
A21-04-004-000	Residential Distillate Oil-fired Furnaces	Distillate (No. 2 oil) Oil-fired Furnaces	None	2.2×10^{-4} lb/MMBtu (9.5×10^{-14} kg/Joule)	U
1-01-009-01	Wood Waste-fired Utility Boilers	Wood Waste-fired Boiler (Bark-fired)	None	2.90×10^{-3} lb/ton (1.45×10^{-3} kg/Mg)	D
1-01-009-02	Wood Waste-fired Utility Boilers	Wood Waste-fired Boiler (Wood/Bark-fired)	ESP	1.60×10^{-5} lb/ton (8.00×10^{-6} kg/Mg)	D
			Scrubber	3.50×10^{-4} lb/ton (1.75×10^{-4} kg/Mg)	D
			Multiple Cyclone with/without Flyash Reinjection	3.20×10^{-4} lb/ton (1.60×10^{-4} kg/Mg)	D
1-01-009-03	Wood Waste-fired Utility Boilers	Wood Waste-fired Boiler (Wood-fired)	ESP	1.10×10^{-3} lb/ton (5.50×10^{-4} kg/Mg)	D
			Multiple Cyclone without Flyash Reinjection	3.10×10^{-4} lb/ton (1.55×10^{-4} kg/Mg)	D
			None	2.9×10^{-3} lb/ton (1.45×10^{-3} kg/Mg)	U

TABLE A-1. SUMMARY OF EMISSION FACTORS BY SOURCE CLASSIFICATION CODES (CONTINUED)

SCC/AMS Code	Description	Emission Source	Control Device	Emission Factor English (Metric)	Factor Rating
1-01-009-03	Wood Waste-fired Utility Boilers (continued)		Limestone Injection, Thermal de-NO_x with Ammonia Injection, Water Treatment, Multi-Cyclone, Fabric Collector	4.49×10^{-6} lb/MMBtu[b] (1.93×10^{-15} kg/Joule)	U
1-02-009-01	Wood Waste-fired Industrial Boilers	Wood Waste-fired Boiler (Bark-fired, >50,000 lb steam)	ESP - Medium Efficiency	1.50×10^{-6} lb/MMBtu (6.46×10^{-16} kg/Joule)	U
			None	2.90×10^{-3} lb/ton (1.45×10^{-3} kg/Mg)	D
1-02-009-02	Wood Waste-fired Industrial Boilers	Wood Waste-fired Boiler (Wood/Bark-fired, >50,000 lb steam)	Multiple Cyclone with Flyash Reinjection	3.20×10^{-4} lb/ton (1.60×10^{-4} kg/Mg)	D
			ESP	1.60×10^{-5} lb/ton (8.00×10^{-6} kg/Mg)	D
			Scrubber	3.50×10^{-4} lb/ton (1.75×10^{-4} kg/Mg)	D
			Multiple Cyclone without Flyash Reinjection	3.20×10^{-4} lb/ton (1.60×10^{-4} kg/Mg)	D
1-02-009-03	Wood Waste-fired Industrial Boilers	Wood Waste-fired Boiler (Wood-fired, >50,000 lb steam)	Wet Scrubber - Medium Efficiency	1.60×10^{-5} lb/MMBtu (6.89×10^{-15} kg/Joule)	U
			Multiple Cyclone without Flyash Reinjection/Wet Scrubber - Medium Efficiency	4.00×10^{-5} lb/MMBtu (1.72×10^{-14} kg/Joule)	U
			Multiple Cyclone without Flyash Reinjection	3.10×10^{-4} lb/ton (1.55×10^{-4} kg/Mg)	D
			ESP	1.10×10^{-3} lb/ton (5.50×10^{-4} kg/Mg)	D

TABLE A-1. SUMMARY OF EMISSION FACTORS BY SOURCE CLASSIFICATION CODES (CONTINUED)

SCC/AMS Code	Description	Emission Source	Control Device	Emission Factor English (Metric)	Factor Rating
1-02-009-03 (continued)	Wood Waste-fired Industrial Boilers	Wood Waste-fired Boiler (Wood-fired, >50,000 lb steam)	Multiple Cyclone without Flyash Reinjection/ESP - Medium Efficiency	2.25×10^{-6} lb/MMBtu (9.70×10^{-16} kg/Joule)	U
1-02-009-04	Wood Waste-fired Industrial Boilers	Wood Waste-fired Boiler (Bark-fired, <50,000 lb steam)	None	2.90×10^{-3} lb/ton (1.45×10^{-3} kg/Mg)	D
1-02-009-05	Wood Waste-fired Industrial Boilers	Wood Waste-fired Boiler (Wood/Bark-fired, <50,000 lb steam)	Multiple Cyclone with Flyash Reinjection	3.20×10^{-4} lb/ton (1.60×10^{-4} kg/Mg)	D
			ESP	1.60×10^{-5} lb/ton (8.00×10^{-6} kg/Mg)	D
			Scrubber	3.50×10^{-4} lb/ton (1.75×10^{-4} kg/Mg)	D
			Multiple Cyclone without Flash Reinjection	3.20×10^{-4} lb/ton (1.60×10^{-4} kg/Mg)	D
1-02-009-06	Wood Waste-fired Industrial Boilers	Wood Waste-fired Boiler (Wood-fired, <50,000 lb steam)	Multiple Cyclone without Flyash Reinjection	3.10×10^{-4} lb/ton (1.55×10^{-4} kg/Mg)	D
			ESP	1.10×10^{-3} lb/ton (5.50×10^{-4} kg/Mg)	D
			Scrubber	1.14×10^{-5} lb/MMBtu (4.91×10^{-15} kg/Joule)	U
1-03-009-01	Wood Waste-fired Comm/Instit. Boilers	Wood/Bark-fired Boiler (Bark-fired)	None	2.90×10^{-3} lb/ton (1.45×10^{-3} kg/Mg)	D
1-01-006-04	Natural Gas Utility Boiler	Natural Gas Boilers	Overfire Air and Flue Gas Recirculation	2.71×10^{-4} lb/ton	E
1-01-006-04	Gas-fired Utility Boiler	Gas Fired Boiler	None	.37 lb/trillion BTU	U
1-03-009-02	Wood Waste-fired Comm/Instit. Boilers	Wood/Bark-fired Boiler (Wood/Bark-fired)	Multiple Cyclone with Flyash Reinjection	3.20×10^{-4} lb/ton (1.60×10^{-4} kg/Mg)	D

TABLE A-1. SUMMARY OF EMISSION FACTORS BY SOURCE CLASSIFICATION CODES (CONTINUED)

SCC/AMS Code	Description	Emission Source	Control Device	Emission Factor English (Metric)	Factor Rating
1-03-009-02	Wood Waste-fired Comm/Instit. Boilers (continued)		Scrubber	3.50×10^{-4} lb/ton (1.75×10^{-4} kg/Mg)	D
			ESP	1.60×10^{-5} lb/ton (8.00×10^{-6} kg/Mg)	D
			Multiple Cyclone without Flyash Reinjection	3.20×10^{-4} lb/ton (1.60×10^{-4} kg/Mg)	D
1-03-009-03	Wood Waste-fired Comm/Instit. Boilers	Wood/Bark-fired Boiler (Wood-fired)	Multiple Cyclone without Flyash Reinjection	3.10×10^{-4} lb/ton (1.55×10^{-4} kg/Mg)	D
			ESP	1.10×10^{-3} lb/ton (5.50×10^{-4} kg/Mg)	D
1-01-001-02	Coal-fired Utility Boilers	Anthracite Coal Travelling Grate Overfeed Stoker	None	8.90×10^{-3} lb/ton (4.45×10^{-3} kg/Mg)	E
1-01-002-01	Coal-fired Utility Boilers	Bituminous Coal: Pulverized: Wet Bottom	None	5.07×10^{-4} lb/MMBtu (2.18×10^{-13} kg/Joule)	E
1-01-002-02	Coal-fired Utility Boilers	Bituminous Coal: Pulverized: Dry Bottom	None	5.07×10^{-4} lb/MMBtu (2.18×10^{-13} kg/Joule)	E
			ESP,FF or venturi scrubber	4.20×10^{-4}(lb/ton) 2.10×10^{-4} kg/Mg)	A
1-01-002-03	Coal-fired Utility Boilers	Bituminous Coal: Cyclone Furnace	None	5.07×10^{-4} lb/MMBtu (2.18×10^{-13} kg/Joule)	E
			ESP,FF or venturi scrubber	4.20×10^{-4}(lb/ton) 2.10×10^{-4} kg/Mg)	A
1-01-002-04	Coal-fired Utility Boilers	Bituminous Coal: Spreader Stoker	None	5.07×10^{-4} lb/MMBtu (2.18×10^{-13} kg/Joule)	E
1-01-002-05	Coal-fired Utility Boilers	Bituminous Coal: Travelling Grate (Overfeed) Stoker	None	5.07×10^{-4} lb/MMBtu (2.18×10^{-13} kg/Joule)	E

TABLE A-1. SUMMARY OF EMISSION FACTORS BY SOURCE CLASSIFICATION CODES (CONTINUED)

SCC/AMS Code	Description	Emission Source	Control Device	Emission Factor English (Metric)	Factor Rating
1-01-002-21	Coal-fired Utility Boilers	Subbituminous Coal: Pulverized: Wet Bottom	None	5.07×10^{-4} lb/MMBtu (2.18×10^{-13} kg/Joule)	E
1-01-002-22	Coal-fired Utility Boilers	Subbituminous Coal: Pulverized: Dry Bottom	None	5.07×10^{-4} lb/MMBtu (2.18×10^{-13} kg/Joule)	E
			ESP,FF or venturi scrubber	4.20×10^{-4}(lb/ton) 2.10×10^{-4} kg/Mg)	A
1-01-002-23	Coal-fired Utility Boilers	Subbituminous Coal: Cyclone Furnace	None	5.07×10^{-4} lb/MMBtu (2.18×10^{-13} kg/Joule)	E
			ESP,FF or venturi scrubber	4.20×10^{-4}(lb/ton) 2.10×10^{-4} kg/Mg)	A
1-01-002-24	Coal-fired Utility Boilers	Subbituminous Coal: Spreader Stoker	None	5.07×10^{-4} lb/MMBtu (2.18×10^{-13} kg/Joule)	E
1-01-002-25	Coal-fired Utility Boilers	Subbituminous Coal: Travelling Grate (Overfeed) Stoker	None	5.07×10^{-4} lb/MMBtu (2.18×10^{-13} kg/Joule)	E
	Coal-fired Utility Boilers	Coal-fired Unit	PM	4.8 lb/trillion BTU	U
	Coal-fired Utility Boilers	Coal-fired Unit	PM/SO^2	5.8 lb/trillion BTU	U
1-02-001-04	Coal-fired Industrial Boilers	Anthracite Coal Travelling Grate (Overfeed) Stoker	None	8.90×10^{-3} lb/ton (4.45×10^{-3} kg/Mg)	E
1-02-002-01	Coal-fired Industrial Boilers	Bituminous Coal Pulverized: Wet Bottom	None	5.07×10^{-4} lb/MMBtu (2.18×10^{-13} kg/Joule)	E
1-02-002-02	Coal-fired Industrial Boilers	Bituminous Coal Pulverized Coal: Dry Bottom	None	5.07×10^{-4} lb/MMBtu (2.18×10^{-13} kg/Joule)	E
			ESP,FF or venturi scrubber	4.20×10^{-4}(lb/ton) 2.10×10^{-4} kg/Mg)	A
1-02-002-03	Coal-fired Industrial Boilers	Bituminous Coal Cyclone Furnace	None	5.07×10^{-4} lb/MMBtu (2.18×10^{-13} kg/Joule)	E

TABLE A-1. SUMMARY OF EMISSION FACTORS BY SOURCE CLASSIFICATION CODES (CONTINUED)

SCC/AMS Code	Description	Emission Source	Control Device	Emission Factor English (Metric)	Factor Rating
1-02-002-03	Coal-fired Industrial Boilers (continued)		ESP,FF or venturi scrubber	4.20×10^{-4}(lb/ton) 2.10×10^{-4} kg/Mg)	A
1-02-002-04	Coal-fired Industrial Boilers	Bituminous Coal Spreader Stoker	None	5.07×10^{-4} lb/MMBtu (2.18×10^{-13} kg/Joule)	E
1-02-002-05	Coal-fired Industrial Boilers	Bituminous Coal Overfeed Stoker	None	5.07×10^{-4} lb/MMBtu (2.18×10^{-13} kg/Joule)	E
1-02-002-06	Coal-fired Industrial Boilers	Bituminous Coal Underfeed Stoker	None	2.24×10^{-1} lb/ton (1.12×10^{-1} kg/Mg)	U
1-02-002-13	Coal-fired Industrial Boilers	Bituminous Coal Wet Slurry	None	9.89×10^{-3} lb/ton (4.95×10^{-3} kg/Mg)	U
1-01-002-21	Coal-fired Industrial Boilers	Subbituminous Coal: Pulverized: Wet Bottom	None	5.07×10^{-4} lb/MMBtu (2.18×10^{-13} kg/Joule)	E
1-01-002-22	Coal-fired Industrial Boilers	Subbituminous Coal: Pulverized: Dry Bottom	None	5.07×10^{-4} lb/MMBtu (2.18×10^{-13} kg/Joule)	E
			ESP,FF or venturi scrubber	4.20×10^{-4}(lb/ton) 2.10×10^{-4} kg/Mg)	A
1-01-002-23	Coal-fired Industrial Boilers	Subbituminous Coal: Cyclone Furnace	None	5.07×10^{-4} lb/MMBtu (2.18×10^{-13} kg/Joule)	E
			ESP,FF or venturi scrubber	4.20×10^{-4}(lb/ton) 2.10×10^{-4} kg/Mg)	A
1-01-002-24	Coal-fired Industrial Boilers	Subbituminous Coal: Spreader Stoker	None	5.07×10^{-4} lb/MMBtu (2.18×10^{-13} kg/Joule)	E
1-01-002-25	Coal-fired Industrial Boilers	Subbituminous Coal: Travelling Grate (Overfeed) Stoker	None	5.07×10^{-4} lb/MMBtu (2.18×10^{-13} kg/Joule)	E
1-03-001-02	Coal-fired Comm/Inst. Boilers	Anthracite Coal Travelling Grate (Overfeed) Stoker	None	8.90×10^{-3} lb/ton (4.45×10^{-3} kg/Mg)	E

TABLE A-1. SUMMARY OF EMISSION FACTORS BY SOURCE CLASSIFICATION CODES (CONTINUED)

SCC/AMS Code	Description	Emission Source	Control Device	Emission Factor English (Metric)	Factor Rating
1-03-002-08	Coal-fired Comm/Inst. Boilers	Bituminous Coal Underfeed Stoker	Multiple Cyclone without Flyash Reinjection	1.21×10^{-3} lb/ton (6.05×10^{-4} kg/Mg)	U
1-03-002-03	Coal-fired Comm/Inst. Boilers	Bituminous Coal Cyclone Furnace	None	5.07×10^{-4} lb/MMBtu (2.18×10^{-13} kg/Joule)	E
			ESP,FF or venturi scrubber	4.20×10^{-4}(lb/ton) 2.10×10^{-4} kg/Mg)	A
1-03-002-05	Coal-fired Comm/Inst. Boilers	Bituminous Coal Pulverized: Wet Bottom	None	5.07×10^{-4} lb/MMBtu (2.18×10^{-13} kg/Joule)	E
1-03-002-06	Coal-fired Comm/Inst. Boilers	Bituminous Coal Pulverized Coal: Dry Bottom	None	5.07×10^{-4} lb/MMBtu (2.18×10^{-13} kg/Joule)	E
			ESP,FF or venturi scrubber	4.20×10^{-4}(lb/ton) 2.10×10^{-4} kg/Mg)	A
1-03-002-07	Coal-fired Comm/Inst. Boilers	Bituminous Coal Overfeed Stoker	None	5.07×10^{-4} lb/MMBtu (2.18×10^{-13} kg/Joule)	E
1-03-002-09	Coal-fired Comm/Inst. Boilers	Bituminous Coal Spreader Stoker	None	5.07×10^{-4} lb/MMBtu (2.18×10^{-13} kg/Joule)	E
1-03-002-21	Coal-fired Comm/Inst. Boilers	Subbituminous Coal: Pulverized: Wet Bottom	None	5.07×10^{-4} lb/MMBtu (2.18×10^{-13} kg/Joule)	E
1-03-002-22	Coal-fired Comm/Inst. Boilers	Subbituminous Coal: Pulverized: Dry Bottom	None	5.07×10^{-4} lb/MMBtu (2.18×10^{-13} kg/Joule)	E
			ESP,FF or venturi scrubber	4.20×10^{-4}(lb/ton) 2.10×10^{-4} kg/Mg)	A
1-03-002-23	Coal-fired Comm/Inst. Boilers	Subbituminous Coal: Cyclone Furnace	None	5.07×10^{-4} lb/MMBtu (2.18×10^{-13} kg/Joule)	E
			ESP,FF or venturi scrubber	4.20×10^{-4}(lb/ton) 2.10×10^{-4} kg/Mg)	A
1-03-002-24	Coal-fired Comm/Inst. Boilers	Subbituminous Coal: Spreader Stoker	None	5.07×10^{-4} lb/MMBtu (2.18×10^{-13} kg/Joule)	E

TABLE A-1. SUMMARY OF EMISSION FACTORS BY SOURCE CLASSIFICATION CODES (CONTINUED)

SCC/AMS Code	Description	Emission Source	Control Device	Emission Factor English (Metric)	Factor Rating
1-03-002-25	Coal-fired Comm/Inst. Boilers	Subbituminous Coal: Travelling Grate (Overfeed) Stoker	None	5.07×10^{-4} lb/MMBtu (2.18×10^{-13} kg/Joule)	E
1-01-004-01	Oil-fired Utility Boilers	Residual Oil-fired Boiler: No. 6 Oil, Normal Firing	None	1.00×10^{-5} lb/MMBtu (4.33×10^{-15} kg/Joule)	E
			Flue Gas Recirculation	2.17×10^{-5} lb/MMBtu (9.35×10^{-15} kg/Joule)	U
1-01-004-04	Oil-fired Utility Boilers	Residual Oil-fired Boiler: No. 6 Oil, Tangential Firing	None	1.00×10^{-5} lb/MMBtu (4.33×10^{-15} kg/Joule)	E
1-01-004-05	Oil-fired Utility Boilers	Residual Oil-fired Boiler: No. 5 Oil, Normal Firing	None	1.60×10^{-5} lb/MMBtu (6.89×10^{-15} kg/Joule)	U
	Oil-fired Utility Boilers	Oil-fired Units	PM Control	2.6 lb/trillion BTU	U
	Oil-fired Utility Boilers	Oil-fired Units	PM/SO_2 Control	9.0 lb/trillion BTU	U
1-01-005-01	Oil-fired Utility Boilers	Distillate Oil Grades 1 and 2 Oil	None	8.90×10^{-6} lb/MMBtu (3.84×10^{-15} kg/Joule)	E
1-02-004-01	Oil-fired Industrial Boilers	Residual Oil Grade 6 Oil	None	1.00×10^{-5} lb/MMBtu (4.33×10^{-15} kg/Joule)	E
1-02-005-01	Oil-fired Industrial Boilers	Distillate Oil Grades 1 and 2 Oil	None	8.90×10^{-6} lb/MMBtu (3.84×10^{-15} kg/Joule)	E
1-03-004-01	Oil-fired Comm/Indust Boilers	Residual Oil Grade 6 Oil	None	1.00×10^{-5} lb/MMBtu (4.33×10^{-15} kg/Joule)	E
1-03-005-01	Oil-fired Comm/Indust Boilers	Distillate Oil Grades 1 and 2 Oil	None	8.90×10^{-6} lb/MMBtu (3.84×10^{-15} kg/Joule)	E
1-02-013-02	Waste Oil-fired Industrial Boilers	Waste Oil	None	1.68 lb/1000 gal (2.01×10^{-1} kg/kL)	U

TABLE A-1. SUMMARY OF EMISSION FACTORS BY SOURCE CLASSIFICATION CODES (CONTINUED)

SCC/AMS Code	Description	Emission Source	Control Device	Emission Factor English (Metric)	Factor Rating
1-05-001-13	Waste Oil-fired Industrial Boilers	Waste Oil Air Atomized Burner	None	50x L lb/1000 gal (6.0 x L kg/kL)	D
1-01-013-02	Waste Oil-fired Comm/Inst Boilers	Waste Oil	None	1.68 lb/1000 gal (2.01×10^{-1} kg/kL)	U
1-05-002-13	Waste Oil-fired Comm/Inst Boilers	Waste Oil Air Atomized Burner	None	50x L lb/1000 gal (6.0 x L[1] kg/kL)	D
1-01-012-01	Solid Waste-fired Utility Boilers	Solid Waste	None	2.65×10^{-1} lb/ton (1.33×10^{-1} kg/Mg)	U
			ESP	1.24×10^{-4} lb/MMBtu (5.34×10^{-14} kg/Joule)	C
			Spray Dryer/Absorber/ESP	$<2.66 \times 10^{-4}$ lb/ton ($<1.33 \times 10^{-4}$ kg/Mg)	U
1-02-012-02	Miscellaneous Industrial Boilers	Solid Waste Refuse-derived Fuel	None	1.30×10^{-1} lb/ton (6.50×10^{-2} kg/Mg)	U
5-01-001-01	Municipal Waste Combustion Sources	Starved-Air: Multiple-Chamber	None	1.20×10^{-1} lb/ton (6.00×10^{-2} kg/Mg)	U
			ESP	2.82×10^{-3} lb/ton (1.41×10^{-3} kg/Mg)	C
5-01-001-02	Municipal Waste Combustion Sources	Mass Burn: Single-Chamber	None	1.80×10^{-1} lb/ton (9.00×10^{-2} kg/Mg)	U
5-01-001-03	Municipal Waste Combustion Sources	Refuse-derived Fuel	None	2.01×10^{-1} lb/ton (1.00×10^{-1} kg/Mg)	C
			ESP	3.66×10^{-3} lb/ton (1.83×10^{-3} kg/Mg)	A
			Spray Dryer/FF	1.04×10^{-3} lb/ton (5.20×10^{-4} kg/Mg)	D
			Spray Dryer/ESP	1.16×10^{-3} lb/ton (5.80×10^{-4} kg/Mg)	B

[1]L = weight percent lead in fuel. Multiply numeric value by L to obtain emission factor.

TABLE A-1. SUMMARY OF EMISSION FACTORS BY SOURCE CLASSIFICATION CODES (CONTINUED)

SCC/AMS Code	Description	Emission Source	Control Device	Emission Factor English (Metric)	Factor Rating
5-01-001-04	Municipal Waste Combustion Sources	Mass Burn: Refractory Wall Combustor	None	2.13×10^{-1} lb/ton (1.07×10^{-1} kg/Mg)	A
			Spray Dryer/FF	2.61×10^{-4} lb/ton (1.31×10^{-4} kg/Mg)	A
			Spray Dryer/ESP	9.15×10^{-4} lb/ton (4.58×10^{-4} kg/Mg)	A
			Dry Sorbent Injection/FF	2.97×10^{-4} lb/ton (1.49×10^{-4} kg/Mg)	C
			Dry Sorbent Injection/ESP	2.90×10^{-3} lb/ton (1.45×10^{-3} kg/Mg)	E
			ESP	3.00×10^{-3} lb/ton (1.50×10^{-3} kg/Mg)	A
5-01-001-05	Municipal Waste Combustion Sources	Mass Burn: Waterwall Combustor	None	2.13×10^{-1} lb/ton (1.07×10^{-1} kg/Mg)	A
			Spray Dryer/FF	2.61×10^{-4} lb/ton (1.31×10^{-4} kg/Mg)	A
			Spray Dryer/ESP	9.15×10^{-4} lb/ton (4.58×10^{-4} kg/Mg)	A
			Dry Sorbent Injection/FF	2.97×10^{-4} lb/ton (1.49×10^{-4} kg/Mg)	C
			Dry Sorbent Injection/ESP	2.90×10^{-3} lb/ton (1.45×10^{-3} kg/Mg)	E
			ESP	3.00×10^{-3} lb/ton (1.50×10^{-3} kg/Mg)	A
5-01-001-06	Municipal Waste Combustion Sources	Mass Burn: Rotary Waterwall Combustor	None	2.13×10^{-1} lb/ton (1.07×10^{-1} kg/Mg)	A
			Spray Dryer/FF	2.61×10^{-4} lb/ton (1.31×10^{-4} kg/Mg)	A

TABLE A-1. SUMMARY OF EMISSION FACTORS BY SOURCE CLASSIFICATION CODES (CONTINUED)

SCC/AMS Code	Description	Emission Source	Control Device	Emission Factor English (Metric)	Factor Rating
5-01-001-06	Municipal Waste Combustion Sources (continued)		Spray Dryer/ESP	9.15×10^{-4} lb/ton (4.58×10^{-4} kg/Mg)	A
			Dry Sorbent Injection/FF	2.97×10^{-4} lb/ton (1.49×10^{-4} kg/Mg)	C
			Dry Sorbent Injection/ESP	2.90×10^{-3} lb/ton (1.45×10^{-3} kg/Mg)	E
			ESP	3.00×10^{-3} lb/ton (1.50×10^{-3} kg/Mg)	A
5-01-001-07	Municipal Waste Combustion Sources	Modular Excess Air Combustor	None	2.13×10^{-1} lb/ton (1.07×10^{-1} kg/Mg)	A
			Spray Dryer/FF	2.61×10^{-4} lb/ton (1.31×10^{-4} kg/Mg)	A
			Spray Dryer/ESP	9.15×10^{-4} lb/ton (4.58×10^{-4} kg/Mg)	A
			Dry Sorbent Injection/FF	2.97×10^{-4} lb/ton (1.49×10^{-3} kg/Mg)	C
			Dry Sorbent Injection/ESP	2.90×10^{-3} lb/ton (1.45×10^{-3} kg/Mg)	E
			ESP	3.00×10^{-3} lb/ton (1.50×10^{-3} kg/Mg)	A
5-01-005-15	Sewage Sludge Incinerator Sources	Multiple-hearth Furnace	None	1.00×10^{-1} lb/ton (5.00×10^{-2} kg/Mg)	B
			Single Cyclone/Venturi Scrubber	6.00×10^{-3} lb/ton (3.00×10^{-3} kg/Mg)	E
			Single Cyclone	6.00×10^{-2} lb/ton (3.00×10^{-2} kg/Mg)	E
			ESP	2.00×10^{-3} lb/ton (1.00×10^{-3} kg/Mg)	E

TABLE A-1. SUMMARY OF EMISSION FACTORS BY SOURCE CLASSIFICATION CODES (CONTINUED)

SCC/AMS Code	Description	Emission Source	Control Device	Emission Factor English (Metric)	Factor Rating
5-01-005-15	Sewage Sludge Incinerator Sources (continued)		Venturi Scrubber	1.80×10^{-3} lb/ton (9.00×10^{-4} kg/Mg)	E
			Venturi Scrubber/Wet ESP	1.80×10^{-4} lb/ton (9.00×10^{-5} kg/Mg)	E
			Venturi Scrubber/ Impingement-type Wet Scrubber	6.00×10^{-2} lb/ton (3.00×10^{-2} kg/Mg)	B
			Venturi Scrubber/ Impingement-type Wet Scrubber/Afterburner	1.00×10^{-1} lb/ton (5.00×10^{-2} kg/Mg)	E
			Impingement-type Wet Scrubber	4.00×10^{-2} lb/ton (2.0×10^{-2} kg/Mg)	E
			Single Cyclone/Venturi Scrubber/Impingement Scrubber	2.20×10^{-2} lb/ton (1.10×10^{-2} kg/Mg)	E
5-01-005-16	Sewage Sludge Incinerator Sources	Fludized Bed	None	4.00×10^{-2} lb/ton (2.00×10^{-2} kg/Mg)	E
			FF	1.00×10^{-5} lb/ton (5.00×10^{-6} kg/Mg)	E
			Impingement-type Wet Scrubber	6.00×10^{-3} lb/ton (3.00×10^{-3} kg/Mg)	E
			Venturi Scrubber Impingement-type Wet Scrubber	1.60×10^{-1} lb/ton (8.00×10^{-2} kg/Mg)	E
			Venturi Scrubber/ Impingement-type Wet Scrubber/ESP	2.00×10^{-6} lb/ton (1.00×10^{-6} kg/Mg)	E
5-01-005-05	Medical Waste Combustion Sources	Other Incineration Pathological/Rotary Kiln	None	1.24×10^{-1} lb/ton (6.20×10^{-2} kg/Mg)	E

TABLE A-1. SUMMARY OF EMISSION FACTORS BY SOURCE CLASSIFICATION CODES (CONTINUED)

SCC/AMS Code	Description	Emission Source	Control Device	Emission Factor English (Metric)	Factor Rating
5-01-005-05	Medical Waste Combustion Sources	Other Incineration Pathological/ Controlled Air	None	7.28×10^{-2} lb/ton (3.64×10^{-2} kg/Mg)	B
5-01-005-05	Medical Waste Combustion Sources	Other Incineration Pathological	Wet Scrubber - High Efficiency	6.98×10^{-2} lb/ton (3.49×10^{-2} kg/Mg)	E
			Wet Scrubber - Medium Efficiency/FF	1.60×10^{-3} lb/ton (8.00×10^{-4} kg/Mg)	E
			FF	9.92×10^{-5} lb/ton (4.96×10^{-5} kg/Mg)	E
			Spray Dryer/ FF	1.89×10^{-4} lb/ton (9.45×10^{-5} kg/Mg)	E
			Spray Dryer/Carbon Injection/FF	7.38×10^{-5} lb/ton (3.69×10^{-5} kg/Mg)	E
			Dry Sorbent Injection/ ESP	4.70×10^{-3} lb/ton (2.35×10^{-3} kg/Mg)	E
			Dry Sorbent Injection/FF	6.25×10^{-5} lb/ton (3.12×10^{-1} kg/Mg)	E
			Dry Sorbent Injection/ Carbon Injection/FF	9.27×10^{-5} lb/ton (4.64×10^{-5} kg/Mg)	E
			Dry Sorbent Injection/FF/Scrubber	5.17×10^{-5} lb/ton (2.59×10^{-5} kg/Mg)	E
			Wet Scrubber - Low Efficiency	7.94×10^{-2} lb/ton (3.97×10^{-2} kg/Mg)	E
5-02-005-05	Medical Waste Combustion Sources	Commercial - Incineration - Pathological	None (Rotary Kiln Incinerator)	1.24×10^{-1} lb/ton (6.20×10^{-2} kg/Mg)	E
			Afterburner	6.50×10^{-4} lb/ton (3.30×10^{-4} kg/Mg)	E
			FF	9.92×10^{-5} lb/ton (4.96×10^{-5} kg/Mg)	E

TABLE A-1. SUMMARY OF EMISSION FACTORS BY SOURCE CLASSIFICATION CODES (CONTINUED)

SCC/AMS Code	Description	Emission Source	Control Device	Emission Factor English (Metric)	Factor Rating
5-02-005-05	Medical Waste Combustion Sources (continued)		Wet Scrubber - High Efficiency	6.98×10^{-2} lb/ton (3.49×10^{-2} kg/Mg)	E
			Wet Scrubber - Medium Efficiency/FF	1.60×10^{-3} lb/ton (8.00×10^{-4} kg/Mg)	E
			Spray Dryer/FF	1.89×10^{-4} lb/ton (9.45×10^{-5} kg/Mg)	E
			Spray Dryer/Carbon Injection/FF	7.38×10^{-5} lb/ton (3.69×10^{-5} kg/Mg)	E
			Dry Sorbent Injection/ESP	4.70×10^{-3} lb/ton (2.35×10^{-3} kg/Mg)	E
			Dry Sorbent Injection/Carbon Injection/FF	9.27×10^{-5} lb/ton (4.64×10^{-5} kg/Mg)	E
			Dry Sorbent Injection/FF	6.25×10^{-5} lb/ton (3.12×10^{1} kg/Mg)	E
			None (Controlled Air Incinerator)	7.28×10^{-2} lb/ton (3.64×10^{-2} kg/Mg)	B
			Dry Sorbent Injection/ FF/Scrubber	5.17×10^{-5} lb/ton (2.59×10^{-5} kg/Mg)	E
			Wet Scrubber - Low Efficiency	7.94×10^{-2} lb/ton (3.97×10^{-2} kg/Mg)	E
3-09-025-01	Drum and Barrel Reclamation Sources	Drum Reclamation: Drum Burning Furnace	None	3.50×10^{-4} lb/barrel (1.59×10^{-1} g/barrel)	E
5-03-002-03	Open Burning of Scrap Tires	Open Burning of Shredded Automobile Tires	None	2.00×10^{-4} lb/ton (1.00×10^{-4} kg/Mg)	C
		Burning of Chunk Automobile Tires	None	6.70×10^{-4} lb/ton (3.35×10^{-4} kg/Mg)	C

TABLE A-1. SUMMARY OF EMISSION FACTORS BY SOURCE CLASSIFICATION CODES (CONTINUED)

SCC/AMS Code	Description	Emission Source	Control Device	Emission Factor English (Metric)	Factor Rating
3-15-021-01	Crematories	Crematory Stack	None	4.10×10^{-8} lb/body (1.86×10^{-8} kg/body)	U
3-07-001-04	Kraft Process Recovery Furnaces & Smelt Dissolving Tanks	Direct Contact Evaporator Kraft Recovery Furnace	ESP, ESP/Wet Scrubber	9.5×10^{1} lb/10^{6} ton (4.8×10^{1} kg/10^{6} Mg)	D
3-07-001-10	Kraft Process Recovery Furnaces & Smelt Dissolving Tanks	Nondirect Contact Evaporator Kraft Recovery Furnace	ESP, ESP/Wet Scrubber	1.2×10^{2} lb/10^{6} ton (5.9×10^{1} kg/10^{6} Mg)	D
3-07-001-05	Kraft Process Recovery Furnaces & Smelt Dissolving Tanks	Smelt Dissolving Tank	Demister, Venturi Scrubber	2.3×10^{1} lb/10^{6} ton (1.2×10^{1} kg/10^{6} Mg)	D
3-07-001-06	Lime Kilns	Lime Kiln	None	1.09×10^{-4} lb/ton (5.44×10^{-5} kg/Mg)	U
			Scrubber	1.41×10^{4} lb/ton (7.07×10^{3} kg/Mg)	D
3-07-002-22	Sulfite Process Recovery Furnaces	Sulfite Recovery Furnace	None	1.70×10^{1} lb/10^{6} ton (8.5 kg/10^{6} Mg)	D
3-05-006-06	Portland Cement Manufacturing	Dry Process Kilns	FF	7.50×10^{-5} lb/ton (3.75×10^{-5} kg/Mg)	D
			ESP	7.10×10^{-4} lb/ton (3.55×10^{-4} kg/Mg)	D
			None	1.20×10^{-1} lb/ton (6.00×10^{-2} kg/Mg)	U
3-05-006-13	Portland Cement Manufacturing	Dry Process Raw Material Grinding or Drying	None	4.00×10^{-2} lb/ton (2.00×10^{-2} kg/Mg)	U
3-05-006-17	Portland Cement Manufacturing	Dry Process Clinker Grinding	None	4.00×10^{-2} lb/ton (2.00×10^{-2} kg/Mg)	U
3-05-006-22	Portland Cement Manufacturing	Dry Process Preheater Kilns	FF	7.50×10^{-5} lb/ton (3.75×10^{-5} kg/Mg)	D

TABLE A-1. SUMMARY OF EMISSION FACTORS BY SOURCE CLASSIFICATION CODES (CONTINUED)

SCC/AMS Code	Description	Emission Source	Control Device	Emission Factor English (Metric)	Factor Rating
3-05-006-22	Portland Cement Manufacturing (continued)		ESP	7.10×10^{-4} lb/ton (3.55×10^{-4} kg/Mg)	D
3-05-006-23	Portland Cement Manufacturing	Dry Process Preheater/ Precalcinator Kiln	FF	7.50×10^{-5} lb/ton (3.75×10^{-5} kg/Mg)	D
			ESP	7.10×10^{-4} lb/ton (3.55×10^{-4} kg/Mg)	D
3-05-007-06	Portland Cement Manufacturing	Wet Process Kilns	ESP	7.10×10^{-4} lb/ton (3.55×10^{-4} kg/Mg)	D
			FF	7.50×10^{-5} lb/ton (3.75×10^{-5} kg/Mg)	D
			None	1.00×10^{-1} lb/ton (5.00×10^{-2} kg/Mg)	U
3-05-007-17	Portland Cement Manufacturing	Wet Process Clinker Grinding	None	2.00×10^{-2} lb/ton (1.00×10^{-2} kg/Mg)	U
3-05-014	Processed and Blown Glass	All Processes	None	5 lb/ton (2.5 kg/Mg)	B
3-04-005-05	Lead-acid Battery Production	Overall Process	None	---	U
3-04-005-06	Lead-acid Battery Production	Grid Casting	None	---	B
			Rotoclone	6.73×10^{-2} lb/1000 batteries (3.06×10^{-2} kg/1000 batteries)	U
3-04-005-07	Lead-acid Battery Production	Paste Mixing	None	---	B
			Wet Scrubber - Medium Efficiency	4.00×10^{-4} lb/1000 batteries (2.00×10^{-4} kg/1000 batteries)	U
3-04-005-08	Lead-acid Battery Production	Lead Oxide Mill (Baghouse Outlet)	FF	---	C

TABLE A-1. SUMMARY OF EMISSION FACTORS BY SOURCE CLASSIFICATION CODES (CONTINUED)

SCC/AMS Code	Description	Emission Source	Control Device	Emission Factor English (Metric)	Factor Rating
3-04-005-09	Lead-acid Battery Production	Three-process Operation	None	---	B
			FF	3.77×10^{-1} lb/1000 batteries (1.71×10^{-1} kg/1000 batteries)	U
3-04-005-10	Lead-acid Battery Production	Lead Reclaiming Furnace	None	---	B
			Scrubber	1.01×10^{-1} lb/1000 batteries (5.05×10^{-2} kg/1000 batteries)	U
3-04-005-11	Lead-acid Battery Production	Small Parts Casting	None	1.00×10^{-1} lb/1000 batteries (4.60×10^{-2} kg/1000 batteries)	C
3-04-005-12	Lead-acid Battery Production	Formation	None	---	
3-04-040-01	Lead Cable Coating	Cable Covering	None	5.00×10^{-1} lb/ton (2.50×10^{-1} kg/Mg)	C
3-09-060-01	Ceramic/Glaze Application	Ceramic Glaze Spraying - Spray Booth	None	3.0 lb/ton (1.5 kg/Mg)	B
3-04-051-01	Miscellaneous Lead Products	Ammunition	None	<1.0 lb/ton (<5.0×10^{-1} kg/Mg)	C
3-04-051-02	Miscellaneous Lead Products	Bearing Metals	None	Negligible	C
3-04-051-03	Miscellaneous Lead Products	Other Metallic Lead Processes	None	1.5 lb/ton (7.5×10^{-1} kg/Mg)	C
3-05-035-05	Miscellaneous Lead Products	Abrasive Grain Processing/Washing/Drying	Wet Scrubber	4.4×10^{-3} lb/ton (2.2×10^{-3} kg/Mg)	E
3-06-001-01	Miscellaneous Lead Products	Type Metal Production/ Remelting	Industry Average (Cyclones, FF, ESP, or Wet Scrubber)	2.5×10^{-1} lb/ton (1.3×10^{-1} kg/Mg)	C

TABLE A-1. SUMMARY OF EMISSION FACTORS BY SOURCE CLASSIFICATION CODES (CONTINUED)

SCC/AMS Code	Description	Emission Source	Control Device	Emission Factor English (Metric)	Factor Rating
3-04-004-14	Miscellaneous Lead Products	Lead Melting Pot	Afterburner/ Scrubber	$4.6x10^{-2}$ lb/ton ($2.3x10^{-2}$ kg/Mg)	D
3-05-002-01	Batch-Mix Hot-Mix Asphalt Plants	Rotary Dryer	FF	$7.4x10^{-7}$ lb/ton ($3.7x10^{-7}$ kg/Mg)	D
			Wet Scrubber - Medium Efficiency	$3.10x10^{-6}$ lb/ton ($1.55x10^{-6}$ kg/Mg)	U
			Wet Scrubber - Medium Efficiency/Single Cyclone	$1.03x10^{-6}$ lb/ton ($5.15x10^{-7}$ kg/Mg)	U
			Single Cyclone/Baghouse	$2.00x10^{-6}$ lb/ton ($1.00x10^{-6}$ kg/Mg)	U
			Multiple Cyclone without Fly Ash Reinjection/Baghouse	$2.08x10^{-7}$ lb/ton ($1.04x10^{-7}$ kg/Mg)	U
			None	4.0 lb/ton (2.0 kg/Mg)	U
3-05-002-05	Drum-mix Hot-mix Asphalt Plants	Drum Dryer	FF	$3.30x10^{-6}$ lbs/ton ($1.70x10^{-6}$ kg/Mg)	D
No SCC/AMS code	EOD Activities	TNT	None	$4.1x10^{-4}$ lb emitted/lb treated ($4.1x10^{-4}$ g emitted/g treated)	U
	EOD Activities	Double-based Propellant (DB)	None	$1.3x10^{-2}$ lb emitted/lb treated ($1.3x10^{-2}$ g emitted/g treated)	U
	EOD Activities	Composite-based Propellant (CB)	None	$9.4x10^{-5}$ lb emitted/lb treated ($9.4x10^{-5}$ g emitted/g treated)	U

TABLE A-1. SUMMARY OF EMISSION FACTORS BY SOURCE CLASSIFICATION CODES (CONTINUED)

SCC/AMS Code	Description	Emission Source	Control Device	Emission Factor English (Metric)	Factor Rating
	EOD Activities	20-mm High-explosive Incendiary Cartridges	None	1.8×10^{-3} lb emitted/lb treated (1.8×10^{-3} g emitted/g treated)	U
	EOD Activities	40-mm High-explosive Cartridges	None	1.3×10^{-3} lb emitted/lb treated (1.3×10^{-3} g emitted/g treated)	U
	EOD Activities	M18A1 Claymore Antipersonnel Mine	None	5.3×10^{-7} lb emitted/lb treated (5.3×10^{-7} g emitted/g treated)	U
	EOD Activities	T45E7 Adapter-booster	None	7.7×10^{-4} lb emitted/lb treated (7.7×10^{-4} g emitted/g treated)	U
	EOD Activities	PBAN-Ammonium Perchlorate Propellant	None	2.2×10^{-6} lb emitted/lb treated (2.2×10^{-6} g emitted/g treated)	U
	EOD Activities	CTPB-Ammonium Perchlorate Propellant	None	2.3×10^{-6} lb emitted/lb treated (2.3×10^{-6} g emitted/g treated)	U
	EOD Activities	PEG/PBAN	None	1.0×10^{-6} lb emitted/lb treated (1.0×10^{-6} g emitted/g treated)	U

TECHNICAL REPORT DATA

(PLEASE READ INSTRUCTIONS ON THE REVERSE BEFORE COMPLETING)

1. REPORT NO. EPA-454/R-98-006	2.	3. RECIPIENT'S ACCESSION NO.
4. TITLE AND SUBTITLE LOCATING AND ESTIMATING AIR EMISSIONS FROM SOURCES OF LEAD AND LEAD COMPOUNDS		5. REPORT DATE 5/1/98
		6. PERFORMING ORGANIZATION CODE
7. AUTHOR(S)		8. PERFORMING ORGANIZATION REPORT NO.
9. PERFORMING ORGANIZATION NAME AND ADDRESS EASTERN RESEARCH GROUP, INC P O BOX 2010 MORRISVILLE, NC 27560		10. PROGRAM ELEMENT NO.
		11. CONTRACT/GRANT NO. 68-D7-0068
12. SPONSORING AGENCY NAME AND ADDRESS U. S. ENVIRONMENTAL PROTECTION AGENCY OFFICE OF AIR QUALITY PLANNING AND STANDARDS (MD-14) RESEARCH TRIANGLE PARK, NC 27711		13. TYPE OF REPORT AND PERIOD COVERED FINAL
		14. SPONSORING AGENCY CODE

15. SUPPLEMENTARY NOTES

EPA WORK ASSINGMENT MANAGER: DENNIS BEAUREGARD (919) 541-5512

16. ABSTRACT

TO ASSIST GROUPS INTERESTED IN INVENTORYING AIR EMISSIONS OF VARIOUS POTENTIALLY TOXIC SUBSTANCES, THE U.S. ENVIRONMENTAL PROTECTION AGENCY IS PREPARING A SERIES OF DOCUMENTS, SUCH AS THIS, TO COMPILE AVAILABLE INFORMATION ON SOURCES AND EMISSIONS OF THESE SUBSTANCES. THIS DOCUMENT DEALS SPECIFICALLY WITH LEAD AND LEAD COMPOUNDS. ITS INTENDED AUDIENCE INCLUDES, FEDERAL, STATE, AND LOCAL AIR POLLUTION PERSONNEL AND OTHERS INTERESTED IN LOCATING POTENTIAL EMITTERS OF LEAD AND IN MAKING GROSS ESTIMATES OF AIR EMISSIONS THEREFROM.

THIS DOCUMENT PRESENTS INFORMATION ON (1) THE TYPES OF SOURCES THAT MAY EMIT LEAD; (2) PROCESS VARIATIONS AND RELEASE POINTS FOR THESE SOURCES; AND (3) AVAILABLE EMISSIONS INFORMATION INDICATING THE POTENTIAL FOR LEAD RELEASES INTO THE AIR FROM EACH OPERATION.

17. KEY WORDS AND DOCUMENT ANALYSIS

a. DESCRIPTORS	b. IDENTIFIERS/OPEN ENDED TERMS	c. COSATI FIELD/GROUP
LEAD AND LEAD COMPOUNDS AIR EMISSION SOURCES TOXIC SUBSTANCES EMISSION ESTIMATION		

18. DISTRIBUTION STATEMENT UNLIMITED	UNCLASSIFIED	21. NO. OF PAGES 391
	UNCLASSIFIED	22. PRICE