United States
Environmental Protection
Agency

Office of Air Quality
Planning and Standards
Research Triangle Park NC 27711

EPA-340/1-83-017
January 1983

Stationary Source Compliance Series

EPA

Kraft Pulp Mill Inspection Guide

EPA-340/1-83-017

Kraft Pulp Mill Inspection Guide

by

PEDCo Environmental, Inc.
11499 Chester Road
Post Office Box 46100
Cincinnati, Ohio 45246-0100

Contract No. 68-01-6310
Work Assignment No. 65
PN 3660-1-65

John R. Busik, Project Officer
Robert C. Marshall, Task Manager

U.S. ENVIRONMENTAL PROTECTION AGENCY
Stationary Source Compliance Division
401 M Street, S.W.
Washington, D.C. 20460

January 1983

DISCLAIMER

This report was prepared by PEDCo Environmental, Inc. Cincinnati, Ohio, under Contract No. 68-01-6310, Work Assignment No. 65. It has been reviewed by the Stationary Source Compliance Division of the Office of Air Quality Planning and Standards, U.S. Environmental Protection Agency and approved for publication. Approval does not signify that the contents necessarily reflect the views and policies of the U.S. Environmental Protection Agency. Mention of trade names or commercial products is not intended to constitute endorsement or recommendation for use. Copies of this report are available from the National Technical Information Services, 5285 Port Royal Road, Springfield, Virginia 22161.

CONTENTS

	Page
Figures	viii
Tables	xiii
Acknowledgment	xvi
Executive Summary	xvii
1. Introduction	1
1.1 Purpose and Scope	1
1.1.1 Level I	2
1.1.2 Level II	2
1.1.3 Level III	3
1.1.4 Level IV	4
1.2 Continuous Compliance	4
1.3 Organization of Inspection Guide	5
1.4 Industry Overview	7
1.5 Regulation Under the Clean Air Act	13
1.5.1 State Implementation Plan	15
1.5.2 Federal standards of performance of new sources	16
2. General Preparatory and Preinspection Procedures	21
2.1 File Review	21
2.2 Safety Precautions	22
2.2.1 Exposure to hydrogen sulfide	32
2.2.2 Exposure to chlorine	32
2.3 Safety and Inspection Equipment	35
2.4 Preentry Observations	36
2.5 On-Site Inspection Checklists	37
3. Kraft Pulping Processes	53
3.1 Wood Handling Department	53

CONTENTS (continued)

		Page
3.1.1	Process description	53
3.1.1.1	Debarking	53
3.1.1.2	Chipping	57
3.1.1.3	Knotting and screening	60
3.1.1.4	Storage and transfer	63
3.1.2	Sources of emissions and control	65
3.1.3	Malfunctions	70
3.1.4	Inspection of wood handling department	70
3.2	Pulping Department	72
3.2.1	Process description	72
3.2.1.1	Pulp digester	72
3.2.1.2	Batch digester (blow)	74
3.2.1.3	Digester relief and turpentine recovery	78
3.2.1.4	Continuous digester	81
3.2.1.5	Pulp washing	81
3.2.1.6	Black liquor concentration (evaporation)	84
3.2.1.7	Condensate stripping	91
3.2.1.8	Black liquor oxidation	97
3.2.2	Sources of emissions and control	99
3.2.2.1	Digester and blow tanks	99
3.2.2.2	Washer hood vents	101
3.2.2.3	Evaporator condenser	101
3.2.2.4	Condensate stripping	104
3.2.2.5	Black liquor oxidation	104
3.2.2.6	TRS scrubbers	104
3.2.2.7	Incineration systems	104
3.2.2.8	Lime kiln incineration	104
3.2.3	Malfunctions	107
3.2.3.1	Digester relief systems	107
3.2.3.2	Digester blow system	107
3.2.3.3	Multiple-Effect evaporators	110
3.2.3.4	Black liquor oxidation	111
3.2.3.5	TRS vent control system	111
3.2.4	Inspection of pulping department	111
3.2.4.1	Digester	114
3.2.4.2	Digester relief	115

CONTENTS (continued)

		Page
3.2.4.3	Brown stock washers	115
3.2.4.4	Multiple-Effect evaporators	115
3.2.4.5	Black liquor oxidation	122
3.2.4.6	Condensate stripping	122
3.3	Chemical Recovery	122
3.3.1	Recovery boiler	122
3.3.1.1	Process description	126
3.3.1.2	Sources of emissions	134
3.3.1.3	Control	145
3.3.1.4	Boiler malfunctions	164
3.3.1.5	ESP malfunctions	167
3.3.1.6	Inspection of recovery boiler	183
3.3.2	Smelt dissolving tank	208
3.3.2.1	Process description	208
3.3.2.2	Sources of emission and control	210
3.3.2.3	Malfunctions	215
3.3.2.4	Inspection of the smelt dissolving tank area	215
3.4	Causticizing Department	223
3.4.1	Process description	223
3.4.1.1	Green liquor preparation	225
3.4.1.2	White liquor preparation	225
3.4.1.3	Lime mud washing	227
3.4.1.4	Calcining	227
3.4.2	Emission sources	228
3.4.3	Control	229
3.4.4	Malfunctions	233
3.4.5	Inspection procedures	236
3.5	Power Boilers	243
3.5.1	Process description	244
3.5.1.1	Gas- and oil-fired boilers	246
3.5.1.2	Coal-fired power boilers	247
3.5.1.3	Wood-fired power boilers	249

CONTENTS (continued)

	Page
3.5.2 Sources of emissions	249
3.5.2.1 Gas-fired boilers	249
3.5.2.2 Oil-fired boilers	249
3.5.2.3 Coal-fired boilers	250
3.5.2.4 Bark boilers	252
3.5.3 Control techniques	252
3.5.3.1 Gas-fired boilers	252
3.5.3.2 Oil-fired boilers	253
3.5.3.3 Coal-fired boilers	253
3.5.3.4 Bark boilers	255
3.5.4 Malfunctions	255
3.5.4.1 Mechanical collectors	261
3.5.4.2 Scrubbers	264
3.5.4.3 Fabric filters	267
3.5.4.4 Electrostatic precipitators	270
3.5.5 Inspection of power boilers	274
3.5.5.1 Opacity	275
3.5.5.2 Transmissometer data	275
3.5.5.3 Boiler operating conditions	276
3.5.5.4 Flue gas volume	279
3.5.5.5 Control equipment inspections	281
3.6 Other Sources	285
3.6.1 Bleach plant	285
3.6.1.1 Process description	285
3.6.1.2 Sources of emission and control	293
3.6.1.3 Malfunctions	294
3.6.1.4 Inspection of bleach plants	294
3.6.2 Raw material handling systems	295
3.6.2.1 Process description	295
3.6.2.2 Sources of emissions and control	295
3.6.2.3 Malfunctions	297
3.6.2.4 Inspection	298

CONTENTS (continued)

	Page
4. Compliance Determinations	307
4.1 Establishing a Baseline	309
4.1.1 Recovery boiler	312
4.1.2 Smelt tank	312
4.1.3 Lime kiln	312
4.1.4 Slaker	315
4.1.5 Turpentine condenser and multiple-effect evaporators	315
4.1.6 Blow tank and hot water accumulator	315
4.2 Calculation of Emission Rates	318
4.2.1 TRS sources	318
4.2.2 Emissions from recovery boilers	318
4.2.3 Power boilers	319
4.3 Stack Test Methods	322
4.3.1 Particulate sampling	322
4.3.2 TRS sampling	323
4.3.3 SO_2 sampling	324
4.3.4 Visible emissions	324
Appendix A Summary of State regulations	A-1
Appendix B EPA Reference Methods 1-5, 17	B-1
Appendix C EPA Reference Methods 16, 16A	C-1
Appendix D EPA Reference Method 6	D-1
Appendix E EPA Reference Method 9	E-1

FIGURES

Number		Page
1-1	Geographic Location of Kraft Pulp Mills	8
2-1	Checklist for Obtaining Information During a File Review	23
2-2	Wet Scrubber Inspection Data Sheet	39
2-3	Mechanical Collector Inspection Data Sheet	43
2-4	Electrostatic Precipitator Inspection Data Sheet	45
2-5	Fabric Filter Inspection Data Sheet	49
3-1	Kraft Pulping Process	54
3-2	Drum Debarking	56
3-3	Bag Debarker	56
3-4	Ring Barker	57
3-5	Cutterhead Barker	58
3-6	Hydraulic Barker	59
3-7	Knife Barker	59
3-8	Norman Disk Chipper	61
3-9	Drum Chipper	62
3-10	Horizontal Parallel Chipper	62
3-11	Vibratory Chip Screen	64
3-12	Gyratory Chip Screen	65
3-13	Hydraulic Dump Truck for Chips	66
3-14	End-dump Freight Car and Unloading Platform for Chips	67

FIGURES (continued)

Number		Page
3-15	Rotary Freight Car Dryer for Chips (Link Belt Limited)	68
3-16	Typical Material and Air Flow for Small Woodyard	69
3-17	Pulping Process	73
3-18	Typical Digester Operating Curves	75
3-19	Typical Digester Charging Room Floor	76
3-20	Hot Water Accumulator Showing Primary and Secondary Condensers	77
3-21	Typical Batch Digester Steam Flow Rate During Blow	78
3-22	Worksheet for Calculation of Blow Weight (Steam)	79
3-23	Digester Relief and Turpentine Recovery System	80
3-24	Odor Compounds in Relief Gas after Turpentine Condenser as a Function of Condenser Outlet Temperature	82
3-25	Continuous Digester Flow Sheet	83
3-26	Vacuum Washer Flow Sheet	85
3-27	Pressure Washers Flow Sheet	86
3-28	Diffusion Washer Flow Sheet	87
3-29	Multiple-Effect Long-Tube Vertical Evaporators (Backward Feed)	89
3-30	Multi-Effect Vacuum Evaporation Plant Flow Sheet	90
3-31	Chart of Evaporator Temperatures	92
3-32	Contaminated Condensates Air Stripping Plant Flow Sheet	94
3-33	Contaminated Condensates Steam Stripping Plant Flow Sheet	95
3-34	Stripping Effciency for Different Steam-Condensate Ratios with 10 Theoretical Plants	96
3-35	Agitated Air Sparging System for Black Liquor Oxidation	98

FIGURES (continued)

Number		Page
3-36	Champion Two Stage Unagitated Strong Black Liquor Oxidation System	98
3-37	Vaporsphere Flow Equalization Gas Holders	102
3-38	Floating Cover Flow Equalization Gas Holders	102
3-39	Hotwell Gas Scrubber for 100 Metric Tons Per Hour (9400 gpm) Evaporation Plant for H_2S-Separation of 95 Percent or More	105
3-40	Noncondensable Gas Incineration System	106
3-41	Kraft Batch Digester Blow Gas Flow After Condensing and without Equalization	109
3-42	Cross Section of B&W Recovery Boiler	127
3-43	Difference in Air Systems in U.S. Recovery Boiler Designs	129
3-44	Cyclone Evaporator	130
3-45	Cascade Evaporator	130
3-46	Venturi Evaporator	131
3-47	Three Types of Indirect Contact Evaporators	133
3-48	Effect of Solids Firing Rate on Reduced Sulfur Emissions and Steam Generation Efficiency	136
3-49	Effect of Black Liquor Solids Concentration	137
3-50	Effect of Black Liquor Heating Value	137
3-51	Bed Temperature as a Function of Total Air	139
3-52	Bed Temperature as a Function of Primary Air	139
3-53	Effect of Total Air Supplied to the Unit	140
3-54	Theoretical Loss of Particulate as a Function of Percentage Increases in Primary Air	141
3-55	Effect of Primary Air Temperature	142
3-56	Effect of Sulfur-Sodium Ratio in the Black Liquor	143
3-57	Effect of Chlorine in Black Liquor	144

FIGURES (continued)

Number		Page
3-58	Basic Processes Involved in Electrostatic Precipitation	146
3-59	Typical Wet-Bottom ESP with Heat Jacket	148
3-60	Electrical Diagram for ESP T-R Set	149
3-61	Typical Weighted-Wire ESP with Drag Bottom	151
3-62	Rigid-Frame Design	152
3-63	Wet-Bottom ESP	153
3-64	Drag Chain Assembly	154
3-65	MIGI Rapper Cross Section	156
3-66	Internal Falling-Hammer Rapper Design	157
3-67	Design SCA and Efficiency of 20 Recovery Boiler ESP's	158
3-68	Superficial Velocity Versus Year Installed	159
3-69	ESP Instrumentation Diagram	161
3-70	Positions of Measuring Instruments	162
3-71	Typical Secondary Current Pattern for Unit Experiencing Salt Cake Buildup	168
3-72	Example of a Plugged Distribution Plate	174
3-73	Typical Rapper Layout on a Modern Two-Chamber Precipitator	177
3-74	Typical Pattern Generated by Insulator Tracking	180
3-75	Example of Severe Corrosion of Collection Plates	181
3-76	Example of 6-minute Average Opacity Pattern	188
3-77	Typical Opacity Monitor Output with Severe Rapping Reentrainment Losses	189
3-78	Method of Calculating Additional Moisture in the Flue Gas Stream Due to Direct-Contact Evaporator	196
3-79	Optimum Secondary Current Distribution in ESP Serving Kraft Recovery Boiler, Assuming Uniform Rapping and Wire Size in All Fields	200

FIGURES (continued)

Number		Page
3-80	Secondary Current Pattern for Two ESP Chambers; Chamber A is Having Maintenance Problems that Limit Power Input	201
3-81	Equilibrium Diagram for a Na_2CO_3-NA_2S System	209
3-82	Smelt Dissolving Tank with Water Sprays	211
3-83	Smelt Dissolving Tank with Steam Shatter Jets	212
3-84	Wire Mesh Pad Used in Smelt Dissolving Tank Vents	213
3-85	Low-Energy Entrainment Scrubber for use on Smelt Dissolving Tank Vent (Ducon Dynamic Scrubber)	214
3-86	Typical Causticizing Flow Diagram	224
3-87	Slaker-Classifier used in Typical Causticizing Plant	226
3-88	H_2S Emission from the Lime Kiln Related to NA_2S Level in the Lime Mud	230
3-89	H_2S Emission Related to Percent O_2 in the Flue Gas	230
3-90	H_2S Emission Related to the Moisture Content in the Lime Mud	231
3-91	Coal Size Distribution for Firing in a Spreader Stoker	258
3-92	Plugged Inlet Vane	263
3-93	Plugged Outlet Tube	265
3-94	Plugged Collecting Tube	266
3-95	Fabric Filter Bag Attachment Methods	269
3-96	Fly Ash Resistivity Curve	272
3-97	Flow Diagram of a Three-Stage Bleach Plant: CEH	289
3-98	Cutaway of a Vacuum Washer with Short Drop Leg	290
3-99	Chlorine Dioxide Generating System: Solvay	292
4-1	Calculation of Kraft Recovery Boiler ESP Efficiency	320

TABLES

Number		Page
1-1	Location of Kraft Pulp Mills in the United States	9
1-2	Comparison of Light Extinction Terms	15
2-1	Summary of Reported Human Health Effects of Hydrogen Sulfide	33
2-2	Summary of Reported Human Health Effects of Inhalation of Chlorine	34
3-1	Checklist for Inspection of Wood Handling Systems	71
3-2	Typical Digester Liquor Requirements	74
3-3	Main Components of Typical Kraft Mill Condensates	93
3-4	Typical Kraft Mill Condensate Compositions, Mean Values for 10 Mills	93
3-5	Summary of TRS Control Options for Pulping Department	99
3-6	Gas Flow Rates from Batch Digester	100
3-7	Typical Ranges of Digester Noncondensable Gas Flow Rates	100
3-8	Flammability Limits in Air for Kraft Noncondensable Gases	103
3-9	Flame-Spreading Velocities of Air-Mercaptan Mixtures	103
3-10	Typical Ranges of Evaporator Noncondensable Gas Flow Rates	103
3-11	Malfunctions that may Occur in Digester Relief Turpentine Recovery Systems	108
3-12	Malfunctions that may Occur in Digester Blow Tank Hot Water Accumulator Systems	110
3-13	Malfunctions that may Occur in Multiple-Effect Evaporator Systems	112

TABLES (continued)

Number		Page
3-14	Malfunctions that may Occur in Black Liquor Oxidation Systems	113
3-15	Malfunctions that may Occur in Noncondensable Gas Incineration System	113
3-16	Checklist for Inspection of Digester Blow Systems	116
3-17	Checklist for Inspection of Digester Relief Systems	118
3-18	Checklist for Inspection of Brown Stock Washer Systems	119
3-19	Checklist for Inspection of Multiple-Effect Evaporator Systems	120
3-20	Checklist for Inspection of Black Liquor Oxidation Systems	123
3-21	Checklist for Inspection of Condensate Stripping Systems	125
3-22	Summary of the Effects of Key Recovery Boiler Operating Parameters	184
3-23	Recovery Boiler Operating Parameters to be Recorded During Performance Tests or Inspections	191
3-24	Parameters to be Measured by the Inspector During Level III Inspection of Recovery Boiler ESP	207
3-25	Malfunctions that may Occur in Smelt Tank Particulate Control Systems	215
3-26	Typical Lime Kiln Mass Balance	228
3-27	Power Boiler Operating Parameters to be Recorded During Performance Tests or Level III Inspections	277
3-28	Common Letter Designations used for Bleach Agents	287
3-29	Bleaching Sequences for Sulfate Pulp	288
3-30	Bleaching Sequences for Hardwood Sulfate Pulp	291
3-31	Inspection Checklist for use in Bleach Plant	296
3-32	Inspection Checklist for Material Handling Systems	299
4-1	Summary of the Effects of Recovery Boiler and ESP Operating Parameters on Particulate and TRS Emission Rates	313

TABLES (continued)

Number		Page
4-2	Summary of the Effects of Smelt Tank and Venturi Scrubber Operating Parameters on Particulate and TRS Emission Rates	314
4-3	Summary of the Effects of Lime Kiln and Scrubber Operating Parameters on Particulate and TRS Emission Rates	316
4-4	Summary of the Effects of Shaker and Venturi Scrubber Operating Parameters on Particulate Emission Rate	317
4-5	Summary of the Effects of Turpentine Condenser and Multiple-Effect Evaporator Operating Parameters on TRS Emission Rate	317

ACKNOWLEDGMENT

This report was prepared for the U.S. Environmental Protection Agency by PEDCo Environmental, Inc., Cincinnati, Ohio. Mr. Robert Marshall was the EPA Task Manager. Mr. Thomas Ponder served as the Project Director, and Mr. Ronald Hawks was the Project Manager. The principal authors were Mr. Ronald Hawks, Mr. Gary Saunders, Mr. Douglas Orf, and Mr. David Dunbar.

EXECUTIVE SUMMARY

The purpose of this inspection guide is to provide the necessary technical information and data to support State and local inspectors in the evaluation of both new and existing kraft pulp mills with respect to continuing compliance. The guide includes a great deal of information on the overall operation of the many processes in a kraft pulp mill. This detailed process information is presented to provide the inspector with enough information to allow him or her to be conversant with plant personnel regarding the major aspects of a given source or process. By having this basic understanding of each major process, the inspector will be able to ask informed questions of plant personnel and to evaluate the source's program of continuous compliance.

In addition to providing detailed process information, the guide also provides information on the various malfunctions that can occur within each process and the affect that these malfunctions will have on the overall emissions from the process and in many cases the ability of the mill to continuously comply with the applicable Federal, State, or local regulations. In addition to the discussion of malfunctions presented in each of the major process subsections in Section 3, the reader is referred to the following tables that provide a summary of the potential malfunctions associated with each major process and the effect that these malfunctions may have on the operation of the mill and the emissions from the given process:

Table	Process	Page no.
3-11	Digester Relief Turpentine Recovery System	108
3-12	Digester Blow Tank Hot Water Accumulator System	110
3-13	Multiple-Effect Evaporator Systems	112
3-14	Black Liquor Oxidation Systems	113
3-15	Noncondensable Gas Incineration System	113
3-25	Smelt Tank	215

Because the purpose and scope of State and local agency inspections vary and the agency manpower is limited, the guide presents a discussion of four levels of compliance inspections. Each level is increasingly more complex in terms of the information that should be obtained and the evaluations to be conducted. Although the increasing complexity of each inspection level naturally increases the time required to perform each inspection, the benefits of the more complex level III inspections are substantial because the cause of most malfunctions and the lack of continuous compliance are not easily identified by Level I or II Inspections. Briefly, Level I Inspections only consist of visual emission evaluations. Level II Inspections are more detailed and require the inspector to document some of the process operating parameters that determine the allowable emission rate. Basically this level of inspection is commonly referred to as a "walk-through inspection" because the inspector walks through the plant without physically measuring any parameters or conditions. He or she does, however, record any data that may be available as a result of plant instrumentation on the rates of the major pieces of process equipment, the type and generating characteristics of the control equipment, major maintenance activities, the type and quality of fuel consumed, etc.

Level III inspections require that the inspector actually conduct some of his or her own measurements. Therefore, he or she should have equipment for measuring flue gas temperature, oxygen content and velocity, scrubber and fabric filter pressure drop, and fan motor current and revolutions per minute. The inspector may use the data he or she collects to calculate gas volumes through the control devices and to compare these values with design values. In general during a Level III inspection, the inspector should record information from plant instruments that monitor process and control device operating conditions including black liquor properties, black liquor firing rates, steam flow, steam pressure, furnace drafts, and such control device parameters as power input level, pressure drop, and flue gas velocity.

Level IV Inspections are similar to Level III Inspections except that the former is conducted during a performance compliance stack test. The information obtained during a Level IV Inspection is used to produce a comparative baseline for future Level III Inspections so that relationship between certain parameters and emissions can be established to permit both inspector and the plant personnel to monitor certain parameters to determine if the source is complying with the applicable regulation.

To assist the inspector in conducting the inspection, the guide presents a series of checklists. The checklists for the most part are used with Level III Inspections. The general information listed at the top of the checklist can, however, be used for a Level I Inspection if the basic information on the source is not already available. The checklist can also be used for Level II Inspections where the plant has a considerable amount of instrumentation available for monitoring various process or control equipment parameters. The reader is referred to the following checklists or data sheets that help to identify the type of information that should be obtained during a Level II or III Inspection:

Figure	Item	Page
2-1	File Review	23
2-2	Wet Scrubber	39
2-3	Mechanical Collector	43
2-4	Electrostatic Precipitator	45
2-5	Fabric Filter	49

Table	Item	Page
3-1	Wood Handling Systems	71
3-16	Digester Blow Systems	116
3-17	Digester Relief Systems	118
3-18	Brown Stock Washer Systems	119
3-19	Multiple-Effect Evaporator Systems	120
3-20	Black Liquor Oxidation Systems	123
3-21	Condensate Stripper Systems	125
3-23	Recovery Boiler	191
3-24	Recovery Boiler Electrostatic Precipitator	207
3-27	Power Boiler	277
3-31	Bleach Plant	296
3-32	Material Handling System	299

The guide also provides (Section 4) a detailed discussion on what the inspector should do with all the information obtained during the inspection. Procedures are presented on how to use the parameters that have been recorded in conducting the necessary calculations and how the field observations can be used to make judgements about continuous compliance. Certain process parameters can be used to monitor compliance of specific sources between compliance tests. The reader is referred to the following tables that provide information on the effects of various parameters on the overall operation of the kraft pulp mill, the particulate and TRS emissions, and the ability of the source to maintain continuous compliance.

Table	Process	Page
4-1	Recovery Boiler and Electrostatic Precipitator	312
4-2	Smelt Tank and Venturi Scrubber	313
4-3	Lime Kiln and Scrubber	315
4-4	Slaker and Venturi Scrubber	316
4-5	Turpentine Condenser and Multiple-effect Evaporator	316

In general, the particulate and SO_2 emission rates from the recovery boiler are interrelated because the primary method of SO_2 and TRS control is to convert these pollutants to sodium sulfate, which increases the particulate emission rate. The primary recovery boiler parameters that affect particulate emissions are: firing rate, primary air rate, excess air, smelt bed temperature, ESP power, ESP superficial velocity, and flue gas oxygen. A shift in many of these parameters indicates an increase in emissions.

The primary parameters that may be used to determine compliance from the smelt dissolving tank are connected with the rate of particulate generated and the condition of the control devices. Specifically the rate of generation of particulate is related to smelt rate (i.e., boiler firing rate and reduction efficiency) and the amount of particle reentrainment. The condition of the control device is related to such variables as superficial velocity and water flow rate.

Uncontrolled particulate emission rates from the kiln are primarily affected by parameters that affect the superficial velocity through the kiln,

the particle size of the kiln dust, rate of evolution of volatile particulate, and the feed rate to the kiln. The superficial velocity is a function of kiln firing rate and temperature profile. The rate of evolution of volatile particulate is related to slurry feed rate and the amount of soda present in the slurry. Parameters affecting the control device are liquid-to-gas ratio, pressure drop, and particle size. TRS emissions are related to mud washing efficiency (% sodium sulfide expressed as Na_2O), flue gas oxygen, and lime mud slurry moisture. The cold end temperature has an effect on TRS emission levels. Both the kiln excess air and temperature profile down the kiln influence the residence time and oxidation rate of TRS compounds where the kiln is used as a control device.

The rate of green liquor and calcium oxide reacted in the slaker has the strongest effect on uncontrolled particulate emissions. The amount of heat released (i.e., steam generated) and the degree of agitation are related to the reaction rates. The condition of the scrubber (i.e., water flow rate, liquor gas ratio, and pressure drop) also affects the emission rate.

The rate of TRS emissions from multiple-effect evaporators and the turpentine condenser is primarily a function of noncondensable gas volume and tail gas condenser final temperature. The rate of TRS emissions from the hot water accumulator is a function of digester operation, the condition of the primary and secondary condensers, and blow gas volume. The parameters are generally so interrelated that a single parameter analysis is not effective in predicting emissions. Generally, however, TRS emissions will increase if the condensers are plugged.

Finally, the guide presents a detailed discussion of establishing a baseline that involves documenting all pertinent operating parameters as they relate to the emission characteristics of the mill. This includes both process and control equipment parameters.

The baseline may be used for several purposes. First, for existing sources, baseline values may be obtained prior to a stack test to assist in establishing representative operating conditions. The normal range of values may be recorded during a period prior to a test, and these values may be specified in a testing protocol to establish representative conditions or used as a starting point in negotiating the testing protocol with the plant. Comparison of documented compliance test parameters with those specified in

the protocol helps to establish whether the process and control equipment were operating at the specified representative conditions. Second, for new sources, the initial compliance test establishes the operating parameter values that correspond with the measured emission rate. These values can then be compared with the design values. This provides a fixed reference point for comparison to future operating data. Third, the values of the baseline parameters provide data for evaluating routine inspection data. By knowing the effects of the various process and control equipment parameters on emissions, one can make comparisons to evaluate the direction and magnitude of any changes in performance. Fourth, documentation of the baseline data will assist in setting specific ranges on important parameters for possible inclusion in an operating permit (if required by the agency). Finally, the baseline test provides a fixed reference point for comparing long-term performance trends. Proper evaluation of the baseline data may assist in the establishment of preventive maintenance schedules as well as provide an indication of any design or installation problems. In addition, the rate at which the normal operating parameters may vary from baseline values may assist the agency in scheduling routine inspections and periodic compliance tests.

Baselining should only focus on those parameters that have a documented affect on the emission levels rather than on all possible parameters that might influence the emission levels. Collection of data that have no significance can be inefficient and counterproductive. Considerable effort can be involved in recording and analyzing all process and control equipment data normally available at a facility. The inspector must be selective as to which data to collect.

The use of the baseline for documenting deviations from normal conditions requires the establishment of a logic system for each process or control device operating parameter used. A substantial change in the parameter is evaluated based on its impact on the overall emission levels.

Once a baseline has been established the data obtained during a Level III Inspection are usually sufficient to allow the inspector to negotiate corrective action with respect to the process and control equipment without the expense of conducting a performance stack test. Many deficiencies may be corrected as a result of increased or redirected maintenance activities. The ability of inspectors to negotiate such corrective action varies from agency

to agency. The inspector must operate within his agency's guidelines with regard to negotiating compliance agreements or issuing notices of violation. In some cases the corrective action can be completed before the notices can be drafted and formally issued.

SECTION 1

INTRODUCTION

Kraft pulp mills have been and continue to be a major source of particulate matter, sulfur dioxide (SO_2), and total reduced sulfur (TRS) compound emissions. Because the processes within a kraft pulp mill are numerous and very complex, the potential emissions are a function of a number of interrelated process variables. Over the past several years, a number of concerns have been raised regarding the ability of the various sources within the kraft pulp mill to achieve continuous compliance.

1.1 PURPOSE AND SCOPE

This inspection guide is intended to provide the necessary technical information and data to support State and local inspectors in the evaluation of both new and existing kraft pulp mills. The guide includes, among other things, a brief process description of each emission source. This description is intended to provide the inspector with a basic understanding of the technical aspects of each emission source or process. The process description includes the major steps and substeps and operating conditions that can have substantial impact on both uncontrolled and controlled emission rates. It also should provide the inspector with enough information to allow him or her to be conversant with plant personnel regarding the major aspects of a given source or process. Having this basic understanding of each process makes it easier for the inspector to ask informed questions of plant personnel or to seek more detailed data from the technical literature. This guide also should provide the inspector with the necessary information to support certain permit stipulations or more extensive engineering evaluations. Certain portions of the guide provide information on those process parameters that may be used to monitor compliance of specific sources between compliance tests. Changes in these parameters may be used to document the need for more extensive operation and maintenance (O&M) to ensure continued compliance. In

those cases where a clearly defined cause and effect cannot be established for a given source, certain changes in various operating parameters can be used to support the need for a compliance test. This method of source evaluation is commonly referred to as "baselining." The baseline is generally established during a period of known compliance, typically during a compliance stack test, and includes information on both the process conditions and key control equipment operating parameters.

Through an understanding of potential malfunctions, the inspector often can work with plant personnel to reduce both the frequency and duration of excess emissions and to identify and correct those malfunctions that limit production and cause excessive maintenance costs.

Based on the knowledge that the purpose and scope of agency inspections vary and that agency manpower is limited, four levels of compliance inspections have been developed. Each level is increasingly more complex in terms of the evaluations that must be conducted. The increasing complexity of each level naturally increases the time required to perform the inspection. The benefits of the more complex inspections are substantial, however, because most malfunctions and periods of noncompliance are not easily identified by Level I or II Inspections.

The following subsections briefly describe the types of activities associated with each level of inspection. More details regarding a given source or process are presented in Section 3.

1.1.1 Level I

A Level I Inspection consists of a visual emission evaluation according to procedures set forth in EPA Method 9--Visual Determination of the Opacity of Emissions From Stationary Sources. The inspector compares the opacity with local agency emission standards by using appropriate averaging times and any exclusion periods that may be set forth in the State or local agency's regulations.

1.1.2 Level II

A Level II Inspection is more detailed and requires the inspector to document some of the process operating parameters that determine allowable emission rates. The additional information includes capacity and operating

rates of the major pieces of process equipment, the type and operating characteristics of control equipment, major maintenance activities, the type and quantity of fuel consumed, process flow diagrams, and types and quantities of raw materials consumed. This level of inspection is generally referred to as a "walk-through inspection" because the inspector just walks through the plant without physically measuring any operating parameters or conditions. If, however, oxygen monitors, temperature charts, and etc., are available, these data should be recorded. Although the inspector does obtain whatever data the plant has available on the operation of the source, which are valuable in documenting compliance, this level of inspection may overlook serious malfunctions or excess emission periods.

1.1.3 Level III

The Level III Inspection is the most complex level of inspection that is conducted as part of a routine inspection program. This level is more complete and requires substantial time, both in terms of preparation and actual execution of the inspection. The additional data acquired during a Level III Inspection result in a more accurate assessment of O&M practices. These data are invaluable in developing baseline information and in determining source compliance. Properly conducting a Level III Inspection requires that the inspector have equipment for measuring flue gas temperature, oxygen content, and velocity; scrubber and fabric filter pressure drop; and fan motor current and revolutions per minute.

The inspector may use the data he or she obtains along with any plant data and information to calculate gas volumes through control devices and to compare these flue gas values with the design values.

The inspector should also record information from plant instruments that monitor process and control device operating conditions. These variables may include black liquor properties (% solids, heat value), black liquor firing rates, steam flow, steam pressure, and furnace drafts and such control device parameters as power input level, pressure drop, and flue gas velocity.

Plant personnel routinely record operating conditions, and the inspector should compare current conditions with historic values. Serious deviations from established norms should be used to evaluate emissions trends or to determine if a compliance test is warranted.

1.1.4 Level IV

A Level IV Inspection is similar to a Level III Inspection except that the former is conducted during a performance compliance stack test. The information obtained during this inspection is used to produce a comparative baseline for future Level III Inspections.

1.2 CONTINUOUS COMPLIANCE

The Clean Air Act of 1970 required all States to prepare a state implementation plan (SIP) that set forth how the State intended to attain and maintain the National Ambient Air Quality Standards (NAAQS). Each SIP must contain among other things the necessary legal authority and emission limitations to ensure attainment and maintenance of the NAAQS.

The Clean Air Act of 1970 and the initial SIP's developed under that Act placed primary emphasis on initial compliance of sources with a set of specified emission limitations that reduced emissions sufficiently to attain the NAAQS. Less attention and consideration were initially given in the formulation of control strategies that would preserve or maintain the air quality once attainment was achieved.

Control agencies have long recognized that initial compliance does not necessarily mean future or continuing compliance. Faced with limited resources, attainment dates mandated by legislation, emission limits set by regulations, and already established source compliance dates, the agencies understandably placed a greater emphasis on promoting initial source compliance to ensure attainment of NAAQS. Now that most sources have either demonstrated initial compliance or are in the midst of a compliance-oriented program, considerable concern has been raised within the air pollution control community with respect to whether a source is operating and maintaining its control equipment. Some concern has also been raised with respect to whether a source is complying with the applicable emission limit on a continuous basis. In many cases a source can fine tune its control system and make the necessary adjustments to comply with an emission limit during a stack test conducted to certify compliance with the applicable emission limit. Once these tests have been completed, however, the control system may begin to deteriorate and the source may no longer be in compliance with the applicable emission limit.

Reasons for the possible deterioration of the control system include lack of good O&M procedures, poor or virtually no maintenance, poor design, lack of understanding on the part of the control equipment operator, lack of reliable instrumentation, poor recordkeeping or little or no evaluation of the records that are kept, or lack of any desire to make the control equipment operate properly.

State and local agency officials are deeply concerned with the lack of continuous compliance because of its potential impact on the ability of the State or local agency to attain and maintain the NAAQS. As a result, many State and local agencies are looking for ways to improve their existing surveillance, inspection, and enforcement programs to encourage sources; to properly operate and maintain their control equipment; to maintain adequate records and to use these records to avoid significant operating problems; and to continuously comply with all applicable emission limits and visible emission standards.

1.3 ORGANIZATION OF INSPECTION GUIDE

The inspection guide is basically divided into three major sections. Section 2 outlines the activities that must take place before the inspector enters the plant. The inspector should review the files that the agency has compiled on the types and quantities of various process equipment, type and sizes of control equipment, results of emission stack tests, and information from previous inspections. These files also should contain a history of complaints, malfunctions, visible emission evaluations, and previous compliance status. This section provides detailed checklists to assist the inspector in obtaining the necessary information from the files.

Section 2 also contains information concerning various safety precautions that need to be taken during the inspection and describes the type of protective clothing the inspector should wear. As indicated in the description of Level III Inspections, a variety of process monitoring equipment is necessary to obtain operating parameters for use in compliance determination. This section describes each piece of monitoring equipment and its purposes.

Section 3 is by far the largest and the most useful in terms of presenting information that the inspector can use during the actual inspection. This

section is divided according to the following six major processes or systems within a kraft pulp mill:

- Woodhandling
- Pulping
- Chemical recovery
- Causticizing
- Power boilers
- Other sources

A description and process flow sheet are provided for each of these major systems. Because kraft pulping is a complex operation, some of the process descriptions are quite detailed. This detail is necessary to provide the inspector with a sufficient understanding of the process for him or her to communicate effectively with plant personnel.

As noted earlier, the purpose of the compliance inspection is to obtain information that will allow estimation of the level of atmospheric emissions. Because many factors affect emissions, Section 3 also includes the major chemical reactions associated with each major source of emissions and the techniques used to control these emissions. Typical ranges of emissions are provided, along with collection efficiencies, flow rates, temperatures, pressure drops, power levels, etc., for the control equipment.

Although systems are designed to operate in a particular manner, frequent malfunctions can occur and can lead to improper equipment operation and, utlimately, to control equipment deterioration and excess emissions. As a result, common malfunctions and their causes, symptoms, and results are discussed for each major process or system within the kraft pulp mill.

Section 3 also describes the procedures to be used during the inspection of specific process equipment and associated control devices. Where appropriate, checklists and tables indicating typical levels of operation are provided. The specific items that need to be observed and the specific types of information that need to be recorded for each process and control device are also provided as a further aid to the inspector.

Section 4 sets forth what the inspector should do with all of the information gathered during the inspection. This section also outlines how to use

the parameters that have been recorded in conducting the necessary calculations and how the field observations can be used to make judgment decisions.

The table of contents for this inspection guide has been expanded to permit the inspector to easily locate the necessary information regarding the various processes within the kraft pulp mill, the control devices used to minimize the emissions, the inspection procedures to be used for the particular process or control device, the parameters that affect emissions, and the malfunctions that may occur. In addition, the inspector should also consult the rather extensive list of figures and tables that provide photographs or sketches of process and control equipment, inspection checklists, and other valuable information that will aid in the inspection of the source and the subsequent evaluation of the overall source's performance with respect to continuous compliance.

1.4 INDUSTRY OVERVIEW

In 1979, 25 sulfite mills in the United States produced a total of 1.8×10^6 tons of pulp, 50 neutral sulfite semichemical (NSSC) mills produced a total of 4.1×10^6 tons of pulp, and 121 kraft mills (located in 28 states) produced in excess of 38×10^6 tons of pulp. Figure 1-1 shows the relative location of the 121 kraft mills by State and Table 1-1 lists the name and exact location of these mills.[1]

The type of pulping technique used depends on the end product the type of wood available, and the general economics of the situation. The three major pulping techniques are described briefly. The sulfite technique generally uses limestone and sulfur to produce the digestion liquor. Liquid sulfur is burned to form SO_2, which is cooled and passed through a limestone-packed tower. Because of its low cost, it is not necessary to recover the chemicals from the liquor when calcium (limestone) is used. A significant water pollution occurs, however, when the chemicals are discharged. If sodium, ammonium, or magnesium bases are used, however, some byproduct recovery is practical for economic reasons. This pulping technique is simple compared with that required for kraft pulping. The pulp produced by the sulfide or acid pulping technique, which is light in color, is used for fine paper and tissue. Further processing of the pulp yields rayon or cellulose acetate.[2]

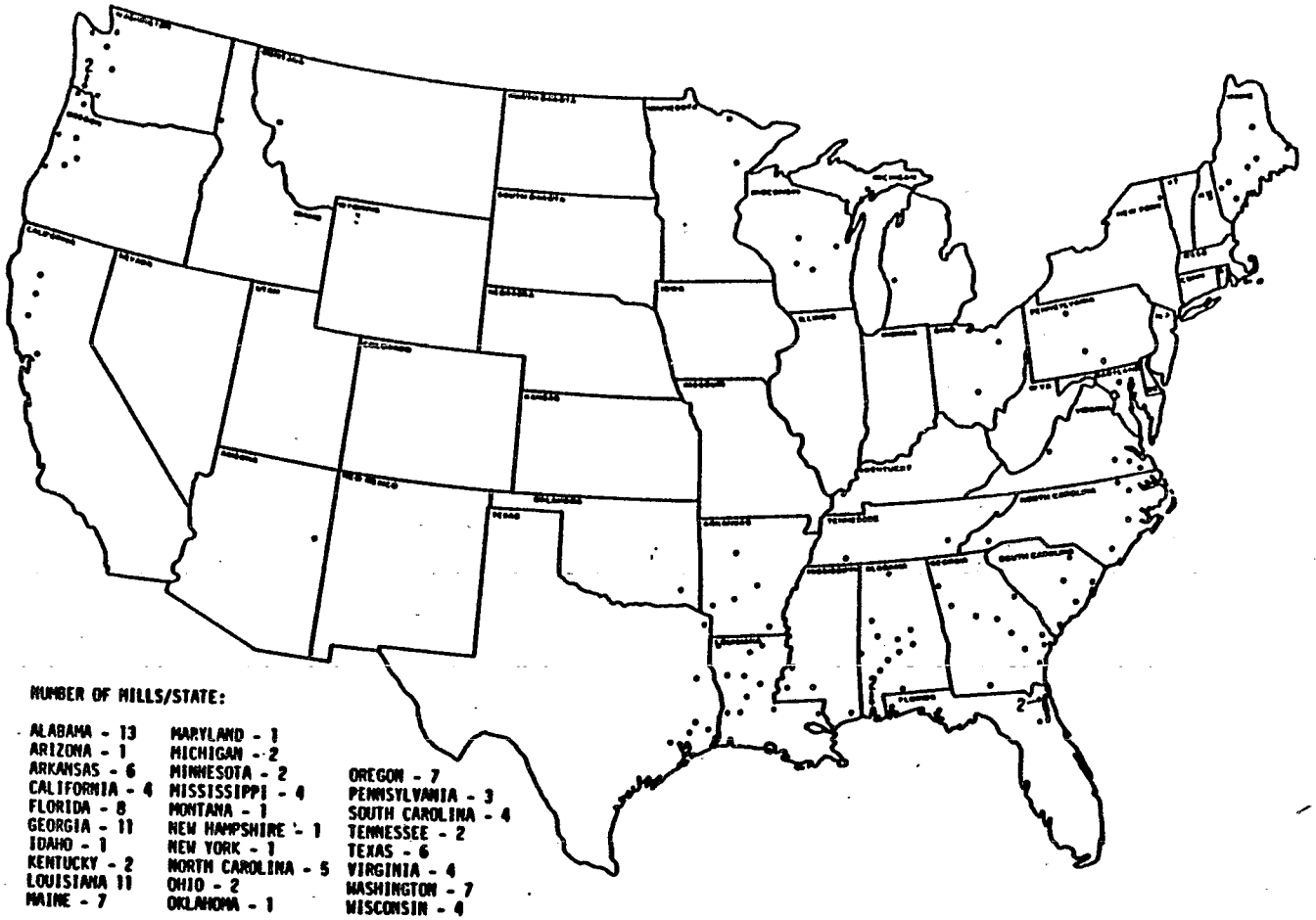

Figure 1-1. Geographic location of kraft pulp mills.

TABLE 1-1. LOCATION OF KRAFT PULP MILLS IN THE UNITED STATES

Company name	Location
Allied Paper	Jackson, Alabama
James River-Dixie Northern, Inc.	Butler, Alabama
Champion	Courtland, Alabama
Container Corp.	Brewton, Alabama
Alabama Kraft	Mahrt, Alabama
Gulf States	Demopolis, Alabama
Alabama River Pulp	Claiborne, Alabama
Hammermill	Selma, Alabama
International Paper	Mobile, Alabama
Kimberly Clark	Coosa Pines, Alabama
MacMillan Bloedel	Pine Hill, Alabama
Scott	Mobile, Alabama
Union Camp	Montgomery, Alabama
Southwest Forest	Snowflake, Arizona
Georgia Pacific	Crossett, Arkansas
Great Northern	Ashdown, Arkansas
Green Bay	Morrilton, Arkansas
International Paper	Camden, Arkansas
International Paper	Pine Bluff, Arkansas
Weyerhaeuser	Pine Bluff, Arkansas
Crown Simpson	Fairhaven, California
Fiberboard (Louisiana Pacific)	Antioch, California
Louisiana Pacific	Samoa, California
Simpson Lee	Anderson, California
Alton Box	Jacksonville, Florida
Container Corp.	Fernandina Beach, Florida
Georgia Pacific	Palatka, Florida
Southwest Forest Industries	Panama City, Florida
Procter & Gamble	Foley, Florida
St. Joe Paper Company	Port St. Joe, Florida

(continued)

TABLE 1-1 (continued)

Company name	Location
St. Regis	Jacksonville, Florida
St. Regis	Pensacola, Florida
Continental Forest	Augusta, Georgia
Continental Forest	Port Wentworth, Georgia
Brunswick	Brunswick, Georgia
Georgia Kraft	Krannert, Georgia
Georgia Kraft	Macon, Georgia
Gilman	St. Mary, Georgia
Great Northern	Cedar Springs, Georgia
Interstate	Riceboro, Georgia
ITT Rayonier	Jesup, Georgia
Owens-Illinois	Valdosta, Georgia
Union Camp	Savannah, Georgia
Potlach	Lewiston, Idaho
Western Kraft	Hawesville, Kentucky
Westvaco	Wickliffe, Kentucky
Boise Cascade	DeRidder, Louisiana
Boise Southern	Elizabeth, Louisiana
Continental Forest	Hodge, Louisiana
Crown Zellerbach	Bogalusa, Louisiana
Crown Zellerbach	St. Francisville, Louisiana
Georgia Pacific	Port Hudson, Louisiana
International Paper	Bastrop, Louisiana
International Paper	Springhill, Louisiana
Olin	West Monroe, Louisiana
Pineville	Pineville, Louisiana
Western Kraft	Campti, Louisiana
Diamond International	Old Town, Maine
Georgia Pacific	Woodland, Maine
International Paper	Jay, Maine
Lincoln	Lincoln, Maine
Scott Paper	Skowhegan, Maine

(continued)

TABLE 1-1 (continued)

Company name	Location
Oxford	Rumford, Maine
S.D. Warren	Westbrook, Maine
Westvaco	Luke, Maryland
Mead	Escanaba, Michigan
Scott	Muskegon, Michigan
Boise Cascade	International Falls, Minnesota
Potlach	Cloquet, Minnesota
International Paper	Moss Point, Mississippi
International Paper	Natchez, Mississippi
International Paper	Vicksburg, Mississippi
St. Regis	Monticello, Mississippi
Champion	Missoula, Montana
Brown	Berlin-Gorham, New Hampshire
International Paper	Ticonderoga, New York
Champion	Canton, North Carolina
Federal	Riegelwood, North Carolina
Champion	Roanoake Rapids, North Carolina
Weyerhaeuser	New Bern, North Carolina
Weyerhaeuser	Plymouth, North Carolina
Grief	Massillon, Ohio
Mead	Chillicothe, Ohio
Weyerhaeuser	Valliant, Oklahoma
American Can	Halsey, Oregon
Boise Cascade	St. Helens, Oregon
Crown Zeller bach	Clatskanie, Oregon
Georgia Pacific	Toledo, Oregon
International Paper	Gardinier, Oregon
Western Kraft	Albany, Oregon
Weyerhaeuser	Springfield, Oregon

(continued)

TABLE 1-1 (continued)

Company name	Location
Appleton	Roaring Springs, Pennsylvania
P.H. Glatfelter	Spring Grove, Pennsylvania
Penntech	Johnsonburg, Pennsylvania
Bowater	Catawba, South Carolina
International Paper	Georgetown, South Carolina
South Carolina	Florence, South Carolina
Westvaco	Charleston, South Carolina
Bowater	Calhoun, Tennessee
Packaging	Counce, Tennessee
Champion	Pasadena, Texas
International Paper	Texarkana, Texas
Owens-Illinois	Orange, Texas
Southland	Houston, Texas
Southland	Lufkin, Texas
Temple-Fostex	Evadale, Texas
Chesapeake	West Point, Virginia
Continental	Hopewell, Virginia
Union Camp	Franklin, Virginia
Westvaco	Covington, Virginia
Boise Cascade	Wallula, Washington
Crown Zellerbach	Camas, Washington
Crown Zellerbach	Port Townsend, Washington
Longview	Longview, Washington
St. Regis	Tacoma, Washington
Weyerhaeuser	Everett, Washington
Weyerhaeuser	Longview, Washington
Consolidated	Wisconsin Rapids, Wisconsin
Great Northern	Nekoosa, Wisconsin
Hammermill	Kaukauna, Wisconsin
Mosinee	Mosinee, Wisconsin

The NSSC technique uses sodium sulfite and sodium carbonate or bicarbonate as digestion chemicals. The cooking chemicals are formed by burning sulfur to form SO_2 and contacting the gas stream with sodium carbonate in an absorption tower to yield sodium sulfite. Because the cooking chemicals are usually not recovered, their disposal becomes a water pollution problem. At best, only partial recovery of the organics is possible, despite the availability of several techniques for this purpose unless the NSSC technique is part of a kraft pulp mill where the NSSC liquor is often recovered in the kraft process. The pulp quality and pulp yield are very high. The pulp is used primarily for a corrugating medium because the fibers have a very high crush strength. Hardwoods are primarily used to obtain this type of pulp. The NSSC process does not produce odors because of the lack of sulfide ions in the cooking liquor. The principal emission from this technique is SO_2.

The kraft technique, which will be explained in detail in Section 3, regenerates the white liquor used for digestion because of the expense of the cooking chemicals. Although most species of wood can be pulped, the kraft process generally uses soft woods. The fiber produced is dark in color, but it can be used for fine white papers after the pulp is bleached. It is the most widely used pulping technique,[3] despite its distinctively odorous discharge.

1.5 REGULATION UNDER THE CLEAN AIR ACT

The Clean Air Act of 1970 gave the EPA the responsibility and authority to control air pollution in the United States and its territories. One of the responsibilities included under Section 109 of the Act was the promulgation of National Ambient Air Quality Standards (NAAQS). Section 110 of the Act required the States to adopt and submit to EPA their plans for attaining and maintaining the NAAQS in all regions of the State. Thus, each State had to decide which existing emission sources should be controlled and to what extent.

In addition, Section 111 of the Clean Air Act gave EPA the authority to develop performance standards for new stationary sources. The New Source Performance Standards (NSPS) established at a national level apply to both new and modified sources. The NSPS must reflect the degree of emission reduction achievable through the application of the best system of continuous emission

reduction that the EPA Administrator (taking into consideration the cost of achieving such emission reduction, and any nonair quality, health, and environmental impact and energy requirements) determines has been adequately demonstrated for a source category.

Section 111(d) of the Clean Air Act also gives EPA the authority to establish a procedure similar to that provided by Section 110 under which each State shall submit to EPA a plan that establishes standards of performance for any existing source for any air pollutant for which air quality criteria have not been issued or which is not included on a list published under Section 108(a) or 112 but to which a standard of performance would apply if such existing source were a new source.

In addition to limiting the mass emission rate, State and local regulations also limit plume opacity for certain sources. Allowable plume opacities vary with the jurisdictions. Although a maximum allowable opacity of 20 percent is common, nearly all jurisdictions allow for periodic excursions under certain conditions. In most States the visible emission regulations are general in wording and broad in terms of overall applicability. Although some States or local agencies have identified specific source categories to which a particular opacity standard would apply, the opacity requirement in most States applies to practically all stationary sources. The most common terminology for applicability is "all existing sources." Other terms include "existing equipment," "existing facilities," "stationary sources," "process operations," and "existing installations." The use of "all existing sources" essentially makes all sources subject to the requirement. Although a few States have opacity requirements that specifically apply to fuel-burning sources or kraft pulp mills, most States have a general opacity requirement that applies to all sources, including fuel-burning sources.[4]

Visible emission regulations vary widely across the United States. The visible emission or opacity requirements are almost evenly divided between the Ringelmann chart and opacity. Some State or local agencies specify only the Ringelmann number; others specify the Ringelmann number and an equivalent opacity limit; and still others specify only an opacity limit.[4] Light transmittance (incident light flux/light flux leaving the plume), opacity, and Ringelmann are compared in Table 1-2.[4]

TABLE 1-2. COMPARISON OF LIGHT EXTINCTION TERMS

Light transmittance, %	Plume opacity, %	Ringelmann number
0	100	5
0.20	80	4
0.40	60	3
0.60	40	2
0.80	20	1
1.00	0	0

Most State and local agencies allow visible emissions to exceed a prescribed standard for some finite period of time, usually 3 to 5 minutes in any one hour, although a few agencies allow an excursion for 6 to 8 minutes in any one hour. A few agencies define the excursion (or exception) as the total minutes in a day that the standard may be exceeded. Only a very few agencies do not allow any excursion above the prescribed standard.

The one exemption that applies almost universally to opacity standards is the exclusion of uncombined water vapor from the opacity reading. This exemption is usually worded as follows, "where the presence of uncombined water is the only reason for failure of an emission to meet the requirements, such sections of the opacity requirements shall not apply."[4]

1.5.1 State Implementation Plans

Pursuant to the Clean Air Act, each State must adopt and submit to EPA a plan that provides for attainment and maintenance of the NAAQS in all areas of the State. The State Implementation Plan (SIP) must include emission limitations, schedules, timetables, and any other measures that may be necessary to ensure attainment and maintenance of the NAAQS. Each State determines the mix of emissions limitations that would be applicable to the sources within the State.

Because a kraft pulp mill is composed of several sources that emit particulate, SO_2, and TRS, a number of regulations within a given State may be applicable to some sources within a kraft pulp mill. Table A-1 in Appendix A summarizes the applicable regulations for selected States where kraft pulp mills are known to be located.

A review of Table A-1 indicates that certain sources (such as lime kilns, smelt tanks, recovery boilers, and power boilers) generally are covered by specific regulations that apply to these processes, whereas other processes are covered under the general SO_2 or particulate process regulations. In addition to subjecting processes to particulate and SO_2 requirements, some States also require that TRS to be limited to so many pounds per ton of air-dried pulp.

1.5.2 Federal Standards of Performance for New Sources

The Clean Air Act requires that EPA develop standards of performance for new stationary sources of significant air pollution. These standards, commonly known as NSPS, are based on the best system of continuous emission reduction that has been adequately demonstrated, taking into account such nonair-quality impacts as economics and energy. It should be noted that these regulations take the form of standards--not just emission limits. Thus, an NSPS provition may require monitoring, process modification, or even specific emission reduction methods.

The applicable NSPS under Subpart BB--Standards of Performance for Kraft Pulp Mills--apply to the following affected facilities within a kraft pulp mill: digester system, brown stock washer system, multiple-effect evaporator system, black liquor oxidation system, recovery furnace, smelt dissolving tank, lime kiln, and condensate stripper system. In pulp mills where kraft pulping is combined with neutral sulfite semichemical pulping, the provisions of this subpart are applicable when any portion of the material charged to an affected facility is produced by the kraft pulping operation. The NSPS for kraft pulp mills indicates the following:

STANDARD OF PARTICULATE MATTER

Process	Limit
Recovery furnace	0.10 g/dscm (0.044 gr/dscf) 35% opacity
Smelt dissolving tank	0.1 g/kg (0.2 lb/ton) black liquor solids
Lime kiln	0.15 g/dscm (0.067 gr/dscf) corrected to 10% O_2 when gaseous fuel is burned
	0.30 g/dscm (0.13 gr/dscf) corrected to 10% O_2 when liquid fossil fuel is burned

STANDARD FOR TRS

Straight kraft recovery furnace	5 ppm by volume on a dry basis, corrected to 8% O_2
Smelt dissolving tank	0.0084 g/kg (0.168 lb/ton) black liquor solids (dry weight)
Lime kiln	8 ppm by volume on a dry basis, corrected to 10% O_2
Digester system, brown stock washer system, condensate stripper system, or black liquor oxidation system that are controlled by a means other than combustion	5 ppm by volume on a dry basis, corrected to the actual O_2 content of the untreated gas stream
Digester system, brown stock washer system, multiple-effect evaporator system, black liquor oxidation system, or condensate stripper system	5 ppm by volume on a dry basis, corrected to 10% O_2*

*Unless the gases are combusted in a lime kiln subject to the NSPS provisions; or the gases are combusted in a recovery furnace subject to the NSPS provisions; or the gases are combusted with other waste gases in an incinerator or other device, or are combusted in a lime kiln or recovery furnace not subject to the NSPS provisions and are subjected to a minimum temperature of 1200°F for at least 0.5 second; or the owner or operator has demonstrated to the Administrator's satisfaction that incinerating the exhaust gases from a new, modified, or reconstructed black liquor oxidation system or brown stock washer system in an existing facility is technologically or economically not feasible. Any exempt system will become subject to the provisions of this subpart if the facility is changed so that the gases can be incinerated.

Subpart B - Adoption and Submittal of State Plans for Designated Facilities indicates that after promulgation of a standard of performance for the control of a designated pollutant from an affected facility the Administrator shall publish a guideline document containing information pertinent to control of the designated pollutant from designated facilities. The guideline document shall provide the following information:

- Information concerning known or suspected endangerment of public health or welfare caused by the designated pollutant.
- A description of the emission reduction systems that have been adequately demonstrated.
- Information on the degree of emission reduction that is achievalbe with each system.

- Incremental periods of time normally expected to be necessary for the design, installation, and startup of identified control systems.

- An emission guideline that reflects the application of the best system of emission reduction that has been adequately demonstrated for designated facilities.

- Such other information that may assist the State in developing a State plan.

Within nine months after notice of availability of a final guideline document, each State shall adopt and submit a plan for the control of the designated pollutant to which the guideline document applies. Each plan shall include emission standards and associated compliance schedules. Except as provided by 60.24(f), the emission standards shall be no less stringent than the corresponding emission guideline specified in Subpart C. Where the Administrator has determined that a designated pollutant may cause or contribute to endangerment of public welfare but that adverse effects on public health have not been demonstrated, States may balance the emission guidelines, compliance times, and other information against other factors of public concern in establishing emission standards. In addition, on a case-by-case basis for particular designated facilities the State may provide for the application of a less stringent emission standard provided that the State demonstrates with respect to such facility:

- Unreasonable cost of control resulting from plant age, location, or basic process design.

- Physical impossibility of installing necessary control equipment.

- Other factors specific to the facility that make the application of a less stringent standard significantly more reasonable.

TRS from a kraft pulp mill is a designated pollutant under 111(d) and 40 CFR 60 Subpart B. The recommended TRS emission limits for kraft pulp mills published by EPA on May 22, 1979 (44 FR 29828) are as follows:

Digester	5 ppm
Multiple-Effect Evaporators	5 ppm
Straight Recovery Furnace System Designed for Low TRS Emissions	5 ppm

All other Straight Kraft Recovery Furnace Systems	20 ppm
Cross Recovery Furnace Systems	25 ppm
Lime Kiln Systems	20 ppm
Condenser Stripper System	5 ppm
Smelt Dissolving System	0.084 g/kg of black liquor solids (dry weight)

REFERENCES FOR SECTION 1

1. U.S. Environmental Protection Agency. Standards Support and Environmental Impact Statement, Vol. I: Proposed Standards of Performance for Kraft Pulp Mills (Revised). EPA-450/2-76-014a, September 1976.

2. U.S. Environmental Protection Agency. Technology Transfer. Environmental Pollution Control, Pulp and Paper Industry, Part I, Air. EPA-625/7-76-001, October 1976.

3. Kirk-Othmer. Encyclopedia of Chemical Terminology, 2nd Ed. Vol. 16, 1970.

4. U.S. Environmental Protection Agency. Analysis of State and Federal Particulate and Visible Emission Combustion Sources. EPA-450/2-81-080, November 1981.

SECTION 2

GENERAL PREPARATORY AND PREINSPECTION PROCEDURES

Preparation is the key to a successful inspection of a kraft pulp mill. Such preparation includes:

- Becoming familiar with the various types of process and control equipment used
- Reviewing past operating practices
- Procuring and testing the necessary inspection equipment to be sure it is working properly
- Inspecting the plant's exterior to obtain information about operating practices
- Advising key plant personnel well in advance so that they are available to answer questions and take part in the inspection. The cooperation of key plant personnel is critical to the success of the inspection.

Advanced preparation on the part of the inspector can save valuable time for both the inspector and plant personnel. A well-informed and prepared inspector generates a degree of confidence that makes plant personnel more inclined to provide information critical to completing a comprehensive plant inspection.

2.1 FILE REVIEW

Baseline operating parameters for both process and control equipment should be obtained from information filed at the agency prior to the inspection. The typical source file should contain information on permit activity, previous inspections, or emission stack tests. The files generally provide descriptions of such characteristics as the size, throughput, and efficiency of the process and control equipment, which give the inspector a perspective on the overall layout and operation of the mill. The source files also contain information on citizen complaints, equipment malfunctions,

opacity levels, and the overall compliance status of the various sources at the mill. This information helps to establish a history of the processes and helps the inspector to focus attention on those processes with continuing compliance problems.

File data on previous emission stack tests and other inspections should be used to establish a baseline for comparison with future inspections or stack tests. Such information also helps to establish a normal operating range for both process and control equipment and permits the inspector to readily note any deviations.

The sample checklist in Figure 2-1 should be used to gather information from the agency files about previous abatement activities.

2.2 SAFETY PRECAUTIONS

Safety precautions must be practiced during plant inspections because heavy equipment movement, high-temperature process equipment, high-pressure steam, toxic gases, and noise are common. Because kraft pulp mills have a significant number of high-temperature processes and many of the processes are wet, extreme caution should be taken to avoid burns from high-temperature processes and the possibility of slipping and falling around the wet processes.

There are also several specific processes that are of concern in terms of the inspector's overall safety. The operation of debarkers and chippers present safety hazards because of the potential for small bark and wood particles to be ejected from these processes at extremely high rates of speed. In addition, these processes are extremely noisy, which makes it difficult to hear any vehicles that may be moving through the mill.

Another special concern is the potential for an explosion of the smelt dissolving tank or recovery boiler. When molten smelt at a temperature of approximately 1600°F is added to smelt dissolving tanks containing water and green liquor, the instantaneous transfer of heat between the smelt and the liquid produces an explosion of steam. These explosions can be on the surface of the tank or deep within the tank. Surface explosions result in a shower of smelt and green liquor that can be hazardous because of the high temperature of the material. Explosions deep within the tank, however, may blow the tank lid off or split the tank at the seam. Both types of explosion can result

NAME OF COMPANY _____

ADDRESS _____

PLANT CONTACT _____

PREVIOUS INSPECTIONS:

Date	Process(es)	Comment(s)

Date	Process(es)	Comment(s)

Figure 2-1. Checklist for obtaining information during a file review. (Continued)

Date	Process(es)	Comment(s)

Date	Process(es)	Comment(s)

Figure 2-1. Checklist for obtaining information during a file review. (Continued)

STACK TEST: (attach specific test results)

Date	Process(es)	Process rate	Emission rate	
			Actual	Allowed

COMPLAINTS:

Date	Source	Comment

MALFUNCTIONS:

Date	Source	Comment

Figure 2-1. Checklist for obtaining information during a file review. (Continued)

PROCESS INFORMATION:

A. RAW MATERIAL RECEIVING (Wood yard)

_____ Round wood

_____ Chips

_____ Sawdust

B. DEBARKING

Type _____ Number _____ Process rate _____tons/h

C. CHIPPER

Type _____ Number _____ Process rate _____tons/h

D. CHIP UNLOADING

_____ Truck _____ Rail _____ Barge

E. CHIP TRANSFER

_____ Conveyor _____ Pneumatic

Receiver _____

Control type _____

Process rate _____ tons/h

F. DIGESTERS

Type _____ batch

Number _____ Volume _____ft^3

Cook time _____ min

Pulp rate _____ ton/h

Cooks per day _____

Number of blow tanks _____

Volume _____ ft^3

Condensors primary _____

secondary _____

TRS control _____ yes _____ no

_____ Continuous

Number _____

Pulp rate _____ tons/h

TRS control _____ yes _____ no

Type _____ Scrubber _____ Incinerator _____

Figure 2-1. Checklist for obtaining information during a file review. (Continued)

G. BLACK LIQUOR OXIDATION

Weak _____ Strong _____

Air _____ O_2 _____

Type _____

Inlet sulfidity _____ g/liter Outlet sulfidity _____ g/liter

Efficiency _____%

TRS control _____ yes _____ no

Type _____ Scrubber _____ Incinerator _____

H. MULTIPLE EFFECT EVAPORATOR

Number of lines _____

Number of effects _____

Inlet black liquor solids (BLS) _____ % Outlet BLS ____ %

Feed rate _____ M lb/h

TRS control _____ yes _____ no

I. RECOVERY BOILER (complete for each boiler)

Boiler manufacturer _____

Design _____ old _____ new

Evaporator type _____ Cascade

_____ Cyclone

_____ Venturi

_____ Noncontact

Inlet BLS to evaporator _____ %

BLS to guns _____ %

Firing rate BLS _____ M lb/h

BL _____ gpm

Rated capacity _____ lb steam/h

_____ BLS/h

_____ BLS/day

_____ tons air-dried pulp (TADP)/day

Liquor heat value _____ Btu/lb BLS

Auxiliary fields _____ Natural gas _____ Residual oil

Particulate control _____ ESP

_____ Scrubber

Figure 2-1. Checklist for obtaining information during a file review. (Continued)

J. SMELT DISSOLVING TANK (complete for each tank)

Number of tanks _____

Smelt rate _____ tons/h

Control _____ Mesh pads Scrubbing media _____

_____ Low energy scrubber

_____ Venturi scrubber

_____ None

K. LIME KILN (complete for each kiln)

Capacity _____ tons/day

Fuel _____

Heat input _____ 10^6 Btu/h

Product rate _____ tons/day

Slurry solids _____ %

Slurry feed rate _____ gpm

Slurry soda _____%

Particulate control _____ Venturi _____ Low energy scrubber

TRS control _____ yes _____ no

L. SLAKER (complete for each slaker)

Capacity _____ tons/h

Green liquor _____

CaO _____

Control _____ Showers _____ Low energy scrubber

M. POWER BOILERS (complete for each boiler)

Type _____

Heat input _____ 10^6 Btu/h

Fuel _____ Coal _____ Wood _____ Oil _____ Gas

Control _____ Multicyclone

_____ Venturi

_____ ESP

_____ Baghouse

Figure 2-1. Checklist for obtaining information during a file review. (Continued)

N. BLEACH PLANT

Capacity _____ TADP/day

Number of stages _____

Bleach chemicals _____ Cl_2

_____ ClO_2

_____ Other

Control _____ Packed bed

_____ Other

Figure 2-1. Checklist for obtaining information during a file review. (Continued)

in death or serious injury to those in the area. If green liquor represents a high percentage of the liquid, the explosion is more violent and can occur at a higher temperature because the salts in the green liquor lower the boiling point of the liquid. The higher the temperature of the liquid, the less likely and less violent will be the explosion.[1,2]

Recovery boiler explosions may occur for many reasons. The most common is water/smelt interaction as a result of water tube leaks, firing of weak liquor, or the improper use of water or air lances. Between 1969 and 1973 there were 23 recovery boiler explosions caused by smelt-water contact and three caused by auxiliary fuel firing practices.

It should be noted that the possibility of a recovery boiler explosion does exist and the inspector should be familiar with the specified evacuation routes and procedures before entering the recovery boiler area.[2]

Turpentine vapors and other organic mists emitted from the digesters also create an explosion hazard. Scrubbers can be used to reduce this explosion potential.

A major safety concern at kraft pulp mills is the entry into a confined area. The cardinal rule for entering a confined area is "never trust your senses." What may appear to be a harmless situation may well be a potential threat. The three most common conditions constituting a threat are:

- Oxygen deficiency
- Presence of combustible gases and vapors
- Presence of toxic gases and vapors.

An inspector should always anticipate that any one or a combination of the above conditions might exist in a confined area such as ductwork, stack, open tanks, penthouse, or the internal portion of a wet scrubber or an ESP. Tests for flammability, oxygen deficiency, and toxicity must be made before an inspector enters a confined area. No one factor will provide more safety than the knowledge of the potential threats that may exist within the area to be inspected. Armed with this knowledge, the inspector can take appropriate precautions and use the proper equipment to minimize any potential dangers.

Many liquids used and handled in the mill are corrosive or a skin irritant. Care must be taken to avoid contact with such chemical reagents or bleach chemicals as: sodium hydroxide (NaOH), sulfuric acid (H_2SO_4), black

liquor, and white liquor. Many solids handled at the mill are also hazardous to the skin and eyes and contact should be avoided. The inspector should wear appropriate eye protection (glasses and side shields) when conducting inspections in the mill.

Because pulping is carried out at elevated temperatures and steam is used, accidental contact with heated surfaces may occur. The inspector should be constantly aware of the location of piping, duct work, or equipment that may present a potential hazard. Protective clothing (long sleeved shirts, gloves, etc.) should be worn to minimize burns as a result of accidental contacts with hot surfaces.

The inspector should remove jewlery, ties or other loose objects before entering the work area. Because of the close quarters in many mills and the possible contact with moving equipment during the process of taking measurements, any object that could become easily entangled should be removed.

In addition to the general concerns noted above, if an inspector is conducting an internal inspection of a wet scrubber or an ESP, he/she should:

- Observe interlock procedures
- Observe the confined entry procedures of isolation lockout
- Watch footing
- Never work alone
- Wear protective equipment
- Deenergize unit before entry
- Purge unit before entry
- Use grounding straps
- Never enter full or partially full hoppers (wet- or dry-bottom).

Lastly, the inspector should be aware of and obey all safety requirements set forth by plant personnel. Many mills have their own safety procedures that must be obeyed; therefore, the inspector should meet briefly with plant personnel regarding any additional safety concerns or requirements that the mill has established with respect to access to certain equipment or areas of the plant and any special safety equipment that may be required.

2.2.1 Exposure to Hydrogen Sulfide

Because of the number of sources in the mill that produce TRS emissions and the potential for the inspector to come in contact with these gases, the following is provided to inform the inspector of the effects of hydrogen sulfide exposure. Hydrogen sulfide is a colorless gas with an obnoxious odor at low concentrations. In humans, it can cause headache, conjunctivitis, sleeplessness, pain in the eyes at low concentrations, and death at high concentrations. Hydrogen sulfide is extremely toxic to humans. Initial exposure is through the respiratory tract, from which the hydrogen sulfide is carried by the blood stream to various body organs. Hydrogen sulfide in the blood can block oxygen transfer at high concentrations.[3] Prolonged exposure can also result in enzyme poisoning and irreversible nerve tissue damage.[4,5] At high concentrations (>1,000,000 $\mu g/m^3$) exposure causes death by paralysis of the respiratory center.[5] Table 2-1 summarizes the health effects associated with human exposure to hydrogen sulfide.[7]

The reported odor threshold for hydrogen sulfide varies from 1 to 45 $\mu g/m^3$.[8] At 500 $\mu g/m^3$, the odor is distinct; at 4,000 to 8,000 $\mu g/m^3$, it is offensive and intense. At 30,000 to 50,000 $\mu g/m^3$, the odor is very strong but tolerable;[6] at greater than 320,000 $\mu g/m^3$, the smell is less pungent because the olfactory nerves become paralyzed. Continued exposure to high concentrations results in a distinct reduction of odor perception as a result of olfactory fatigue.[3] At concentrations above 1,120,000 $\mu g/m^3$, no odor may be sensed and death can occur rapidly.[5] Dulling of the olfactory nerves constitutes a major danger to the inspector who is exposed to moderate to high concentrations for extended periods of time.

2.2.2 Exposure to Chlorine

The inspector should be particularly cautious while inspecting the bleach plant, where chlorine and chlorine dioxide may be used as bleaching agents. The extraction and washing of bleached pulp exposes the pulp to ambient air, where residual chlorine gas may be lost. Although these sources are hooded and vented, the possibility of exposure still exists in some cases.

Chlorine, a dense, greenish-yellow gas with a distinctive irritating odor, is a very strong oxidizing agent. This highly corrosive gas is extremely hazardous to all life forms.[9]

TABLE 2-1. SUMMARY OF REPORTED HUMAN HEALTH EFFECTS OF HYDROGEN SULFIDE[7]

Concentration, $\mu g/m^3$	Effect
1 - 45	Odor threshold.
10	Threshold or reflex effect on eye.
150	Smell slightly perceptible.
500	Smell definitely perceptible.
15,000	Minimum concentration causing eye irritation.
30,000	Maximum allowable occupational exposure for 8 hours.
30,000 - 60,000	Strongly perceptible but not intolerable smell. Minimum concentration causing lung irritation.
150,000	Olfactory fatigue in 2 to 15 minutes; irritation of eyes and respiratory tract after 1 hour; death in 8 to 48 hours.
270,000 - 480,000	No serious damage for 1 hour but intense local irritation; eye irritation in 6 to 8 minutes.
640,000 - 1,120,000	Dangerous concentration after 30 minutes or less.
1,160,000 - 1,370,000	Rapid unconsciousness, respiratory arrest, and death, possibly without odor sensation.
> 1,500,000	Immediate unconsciousness and rapid death.

Human sensitivity to chlorine gas varies greatly. Its main effect is an irritating and corrosive attack on the mucus membranes of the eyes, nose, throat, and respiratory tract.[10] High concentrations of chlorine can damage the lungs and result in pneumonia,[11] emphysema,[11] and bronchitis. In very high concentrations, damage may be severe enough to cause suffocation.[12,13] Table 2-2 summarizes the health effects attributed to chlorine exposure.[9]

TABLE 2-2. SUMMARY OF REPORTED HUMAN HEALTH EFFECTS OF INHALATION OF CHLORINE[9]

Concentration, ppm	Exposure time	Effect
< 1.0		Objective symptoms of irritation.
1		Slight symptoms after several hours exposure.
3.3	Several hours	Risk to health or life; impossible working conditions.
3-5		Tolerable for short periods of time without objective evidence or injury.
3-6		Stinging or burning sensation in the eyes, nose, and throat; sometimes headache due to irritation of the nasal sinuses.
4		Maximum amount that can be inhaled for 1 hour without serious disturbances.
4		Slight smarting of the eyes and irratation of the nose and throat.
~ 5	Working conditions	Premature aging; those exposed suffer from disease of bronchi and become predisposed to tuberculosis; teeth corrode from hydrochloric acid; inflammation or ulceration of the mucous membrane of the nose occurs.
5	30-60 minutes	Does not endanger life.
5		Noxious effect; impossible to breathe after several minutes.
10	< 1 minute	Severe coughing and eye irritation.
> 10		Immediate and delayed.
14-21	0.5-1.0 hour	Dangerous.
20	< 30 minutes	Endangers life.
50	30-60 minutes	Immediately fatal.
100	< 1 minute	Cannot be tolerated for longer than 1 minute.

The odor threshold reported in the literature is below 1,000 $\mu g/m^3$ (0.33 ppm), but it may be lower when acting in combination with hydrogen chloride.[14,15] The 8-hour threshold limit value (TLV) established by the National Institute of Occupational Safety and Health (NIOSH) is 3 mg/m^3 (1 ppm).[16] A peak of 0.5 ppm/15 min has been recommended but not adopted. The inspector should wear respiratory protection while in the bleach plant area and when working near process equipment and control devices. The plant will usually supply respirators for visitors and inspectors to use.

2.3 SAFETY AND INSPECTION EQUIPMENT

While conducting an inspection of the pulp mill, the inspector should use the appropriate protective clothing and safety equipment and follow all company rules and recommendations. Because of the potential for flying pieces of wood and bark particles, the inspector should wear safety glasses with sideshields for protection. The debarkers, chippers, and various conveying systems are the major sources of these flying wood or bark particles. Hearing protection such as ear plugs should also be used because of the high noise levels around debarkers and chippers. Steel-toed shoes and a hard hat are required for protection against overhead hazards and heavy objects. A nonslip sole shoe with ankle support is recommended. A long-sleeved shirt, gloves, and trousers should be worn for protection from the high-temperature processes and the rough texture of the delivered raw materials (wood). Neckties, hair ribbons, rings, etc., should be removed prior to the actual inspection. Dust and mist respirators should be available and used around potentially dusty operations. In some cases a gas mask may be required. In a few cases, the inspector should use a self-contained breathing apparatus when required to enter a confined area.

The equipment or instruments used during an inspection vary according to the time allotted and the level of the inspection. For example, a detailed Level III Inspection involving several days at the mill requires the following: a pitot tube and manometer for measuring the gas stream flow from each process, a manometer for measuring the pressure drop across the appropriate control equipment, a thermometer or thermocouple for measuring stack gas temperatures, a wet bulb/dry bulb thermometer and psychrometric chart for determining moisture, a tachometer for measuring fan speed, an ammeter for

measuring fan motor current, an oxygen meter for determining concentration of the exhaust gases, and a Fyrite or Orsat for determining gas composition. Some general pieces of equipment are also necessary, including 1) a flash light, 2) a stopwatch, 3) a tape measure, 4) a pressure gauge, and 5) a water-flow device.

For a less detailed Level II Inspection, the inspector may only need a camera, a compass, and a stopwatch. During a Level II Inspection, when the inspector does not make any measurements, he or she should obtain readings from plant instruments (e.g., pressure in the digesters, fuel firing rates, temperatures of stack gases) and review the data.

If permitted on mill property, a camera can be useful to document excessive opacity levels and to provide graphical descriptions of problems arising from poor maintenance and housekeeping, missing bags, or control equipment components, and the relative location of certain sources. Immediately after taking a photograph, the inspector should make a log book notation describing the situation represented in each photograph and the time, date, weather conditions, and pertinent directional information.

A compass is useful for determining directions of sources relative to each other, to the sun, and to the inspector. A stopwatch for timing visible emissions observations is also useful.

2.4 PREENTRY OBSERVATIONS

Before entering the mill property or while moving from one process operation to another, the inspector can gain considerable information by preentry observation of the mill. Sources of fugitive dust can sometimes best be observed outside the mill. The inspector should also note the weather conditions (especially precipitation and windspeed) during and prior to the inspection.

Exterior observations also provide an opportunity to observe the general housekeeping practices of the mill and give the inspector an overall picture of the mill layout for comparison with information obtained from the files. The inspector also can get an idea of the level of activity by observing the raw material and pulp moving operations, mill traffic, and processes.

While outside the mill property, the inspector can normally use a camera to photograph excessive visible emissions. Some state laws, however, prohibit the use of a camera without the prior permission of the mill. Data regarding any photographs that may be taken (e.g., date, time of day, weather conditions, position relative to the source) must be recorded immediately. In all cases, while on plant property, the inspector must get permission from plant personnel before taking photographs.

Visible emission observations are important in determining the operating conditions of some processes and their associated control equipment. When observing opacity from stacks, the inspector should follow the procedures of Federal EPA Method 9 or appropriate State agency method. Windspeed, sky condition, and other weather data should be recorded for future use because the reading may be challenged in court. A diagram is also important in identifying the particular source being observed (e.g., the No. 3 coal-fired power boiler) and the observer's position in relation to the sun and the source.

The inspector should record opacity readings on the observation form for a specified duration, depending on the local requirements. Although the regulation may specify a plume opacity below a certain average for a 6-minute period, the inspector may want to take the reading for a longer period, say 30 minutes, and determine if a 6-minute period may have exceeded the applicable limit.

Opacity readings are sometimes best obtained before the inspector enters the mill for the inspection or after he/she leaves the plant property. The inspector should compare the visual measurements with values obtained by using the plant's continuous emission monitoring equipment (if available) for the same time period. The frequency of calibration of these continuous emission monitors should be noted.

If the agency's policy is to provide the mill with a copy of the opacity readings taken during the inspection, the plant official receiving the copy should sign and date the original of the opacity readings.

2.5 ON-SITE INSPECTION CHECKLISTS

During the on-site inspection, the inspector may find it useful to have a series of checklists to record the information obtained during the inspection.

Figures 2-2 through 2-5 are examples of the types of check lists that can be used to obtain information on the process and abatement equipment. Additional copies of certain sections of the check lists should be completed if there are multiple sources for each process (i.e., three recovery boilers, three lime kilns, etc.).

LOCATION _____ DATA SHEET NO. _____

DESIGNATION _____ DATE _____

INSPECTOR(S) _____

CLAIMED CONFIDENTIAL Yes _____ No _____

A. DESCRIPTIVE INFORMATION

Wet Scrubber Type _____

Manufacturer _____

Model Number _____

Date Installed _____

Process/Source Controlled _____

Particulate Characteristics _____

B. COMPONENT INFORMATION (Describe if applicable)

1. Gas Pretreatment:

Presaturator _____

Cyclones _____

Settling Chamber _____

Other _____

2. Demister:

Cyclone _____

Chevron _____

Fiberous Mat _____

Other _____

3. Pumps:

Number _____

Recirculation _____
Pump Manufacturer

Recirculation _____
Pump Rated Horsepower

Recirculation Pump Type _____

Figure 2-2. Wet scrubber inspection data sheet. (Continued)

Data Sheet No. _____
Preparer _____
Confidential: Yes __ No __

B. COMPONENT INFORMATION (continued)

4. Fan/Motor (Specify)

Fan Manufacturer _____

Blade Type: Radial _____ Backward _____ Forward _____

Drive: Direct _____ Belt _____

Damper Position _____

Motor Manufacturer _____

Model No. _____

Rated Horsepower _____

Location: Forced Draft _____ Induced Draft _____

5. Instrumentation (Check if Applicable)

Differential Pressures:	Throat	_____	in. H_2O
	Separator	_____	in. H_2O
	Demister	_____	in. H_2O
Temperatures:	Gas Outlet	_____	^oF
	Gas Inlet	_____	^oF
	Liquor Inlet	_____	^oF
	Liquor Outlet	_____	^oF
pH:	Recirculation	_____	
	Exit Liquor	_____	
	Fan Motor Current	_____	
	Other	_____	
	Nozzle Pressure	_____	
Flow Rates:	Recirculation	_____	gpm
	Makeup	_____	gpm
	Purge	_____	gpm
Motor Current:	Fan	_____	a
	Pump	_____	a

Figure 2-2. Wet scrubber inspection data sheet. (Continued)

Data Sheet No. _____
Preparer _____
Confidential: Yes __ No __

B. COMPONENT INFORMATION (continued)

6. Materials of Construction (Specify type and gauge)

Presaturator _____

Throat _____

Scrubber Shell _____

Trays/Bed Supports _____

Mist Eliminator _____

Fan Housing _____

Figure 2-2. Wet scrubber inspection data sheet. (Continued)

Data Sheet No. _____
Preparer _____
Confidential: Yes __ No __

C. DIAGRAM

1. Sketch wet scrubber system. (Show all major components and processes controlled.)

2. Sketch wet scrubber layout

Figure 2-2. Wet scrubber inspection data sheet. (Continued)

LOCATION _____ DATA SHEET NO. _____

DESIGNATION _____ INSPECTOR(S) _____

DATE _____

CLAIMED

CONFIDENTIAL Yes _____ No _____

A. DESCRIPTIVE INFORMATION

Mechanical Collector Type

Cyclone _____ Settling Chamber _____

Cyclone Bank _____ Double Vortex Cyclone _____

Multiclone _____ Other (describe) _____

_____

Manufacturer _____

Model Number _____

Date Installed _____

Process/Source Controlled _____

Particulate Characteristics _____

_____

B. COMPONENT INFORMATION

1. Cyclone

Diameter of Body _____ ft

Cone Length _____ ft

Material of Construction _____

Gauge of Metal _____

Number of Cyclones _____

2. Hoppers

Number _____

Slope _____

Insulation: Yes _____ No _____

Heated: Yes _____ No _____

Vibrators: Yes _____ No _____

Figure 2-3. Mechanical collector inspection data sheet. (Continued)

Data Sheet No. _____
Preparer _____
Confidential: Yes __ No __

B. COMPONENT INFORMATION (continued)

3. Solids Removal (Check applicable items and provide dimensions)

Rotary Valves _____

Flapper Valves _____

Screw Conveyors _____

Pneumatic Conveyors _____

Free Fall _____

4. Fan/Motor

Fan Manufacturer _____

Model Number _____

Blade Type: Radial _____ Backward _____ Forward _____

Drive: Direct _____ Belt _____

Motor Manufacturer _____

Model Number _____

Rated Horsepower _____

RPM _____

Location: Forced Draft _____ Induced Draft _____

C. SYSTEM LAYOUT

Figure 2-3. Mechanical collector inspection data sheet. (Continued)

LOCATION _____ DATE SHEET NO. _____

DESIGNATION _____ DATE _____

INSPECTOR(S) _____

CLAIMED

CONFIDENTIAL Yes _____ No _____

A. DESCRIPTIVE INFORMATION

Electrostatic Precipitator Type _____

Manufacturer _____

Model No. _____

Date Installed _____

No. of TR Sets _____

No. of Fields in Series _____

Plate Length, Height _____ ft

Plate Area _____ ft^2

Plate Spacing _____ in.

Number of chambers _____

Bypass System: Yes _____ No _____

B. ELECTROSTATIC PRECIPITATOR LAYOUT SKETCH (each square 2 ft x 2 ft)

Figure 2-4. Electrostatic precipitator inspection data sheet. (Continued)

Data Sheet No. _____
Preparer _____
Confidential: Yes __ No __

C. COMPONENT INFORMATION

1. Gas Distribution

Perforated Plates: Inlet _____ Outlet _____

Turning Vanes: Inlet _____ Outlet _____

2. Rappers

Discharge Wires

Type _____

Number _____

Manufacturer _____

Air Pressure (if applicable) _____

Collection Plates

Type _____

Number _____

Manufacturer _____

Air Pressure (if applicable) _____

Distribution Plates/Vanes

Type _____

Number _____

Manufacturer _____

Air Pressure (if applicable) _____

Figure 2-4. Electrostatic precipitator inspection data sheet. (Continued)

Data Sheet No. _____
Preparer _____
Confidential: Yes __ No __

C. COMPONENT INFORMATION (continued)

Layout of Rappers (Show discharge wire rappers as D, collection plate rappers as C, and distribution plate rappers as X.)

3. Hoppers

Number _____

Length _____ ft

Slope _____ degrees

Level Indicator Height _____ ft from top

Insulation: Yes _____ No _____

Heating: Yes _____ No _____

Figure 2-4. Electrostatic precipitator inspection data sheet. (Continued)

Data Sheet No. _____
Preparer _____
Confidential: Yes __ No __

C. COMPONENT INFORMATION (continued)

4. Dry Bottom (Recovery Boiler)

Drag Chains: Longitude _____ Drag Chain Motor Current ____ amps
Latitude _____ Drag Chain Speed ____ rpm
Number of Chains _____ Dust Discharge to Screw _____

5. Wet Bottom (Recovery Boiler)

Number of Agitators _____
Liquid level indicator Yes _____ No _____
Liquid temperature _____ °F
Flow in _____ gal/min Flow out _____ gal/min
Percent solids in _____ Out _____

6. Instrumentation:

Primary Current _____ Gas Inlet Temperature _____
Primary Voltage _____ Level Indicator Alarm _____
Secondary Current _____ Hopper Heater Indicator Light _____
Secondary Voltage _____ Penthouse Heater Indicator Light _____

7. Shell

Material of Construction _____
Insulation: Yes _____ No _____

8. Opacity Monitor

Number _____
Manufacturer _____
Model Number _____
Location _____

9. Power Supply

Type _____
Pulse System: Yes _____ No _____
Digital Control Mode _____
Other _____

Figure 2-4. Electrostatic precipitator inspection data sheet. (Continued)

LOCATION _____ DATA SHEET NO. _____

DESIGNATION _____ DATE _____

INSPECTOR(S) _____

CLAIMED

CONFIDENTIAL Yes _____ No _____

A. DESCRIPTIVE INFORMATION

Fabric Filter Type _____

Manufacturer _____

Model No. _____

Cloth Type and Weight _____

Area _____ ft^2

Air-to-cloth Ratio _____ $ACFM/ft^2$

Pressure Drop Range _____ in. H_2O

Operating Temperature _____ °F

Collection Efficiency _____ %

Type of Bag Cleaning:

Shaker _____ Pulse Jet _____ Reverse Air _____

Frequency of Bag Cleaning _____

Bypass System: Yes _____ No _____

B. FABRIC FILTER LAYOUT SKETCH

Figure 2-5. Fabric filter inspection data sheet. (Continued)

C. COMPONENT INFORMATION

1. Hoppers

Number _____

Length _____ ft

Shape _____ degrees

Level Indicator Height _____ ft from top

Insulation: Yes ___ No ___

Heating: Yes ___ No ___

2. Shell

Material of Construction _____

Insulation: Yes ___ No ___

3. Opacity Monitor

Number _____

Manufacturer _____

Model Number _____

Location _____

Figure 2-5. Fabric filter inspection data sheet. (Continued)

REFERENCES FOR SECTION 2

1. Nelson, W. A New Theory to Explain Physical Explosions. TAPPI, March 1973.

2. Taylor, Malcolm L., and Howard S. Gardner. Causes of Recovery Boiler Explosions. TAPPI, November 1974.

3. Petri, H. The Effects of Hydrogen Sulfide and Carbon Disulfide. Staub 21(2):64, 1961.

4. Denmead, C. F. Air Pollution by Hydrogen Sulfide from a Shallow Polluted Tidal Inlet. Auckland, New Zealand. Clean Air Conference, University of New South Wales, 1962.

5. Permissible Emission Concentrations of Hydrogen Sulfide. Subcommittee on Effects of Hydrogen Sulfide of the Committee on Effects of Dust and Gas of the Verein Deutscher Ingenieure Committee on Air Purification, VDI 2107, 1960.

6. Patty, F. A. (Ed.). Industrial Hygiene and Toxicology, Vol. I. (New York: Interscience, p. 896, 1958.)

7. U.S. Department of Health, Education, and Welfare. Preliminary Air Pollution Survey of Hydrogen Sulfide. A Literature Review. Contract No. PH 22-68-25, October 1969.

8. Adams, D. F., and F. A. Young. Draft Odor Detection and Objectionability Thresholds. Washington State University Progress Report on U.S. Public Health Service Grant, 1965.

9. U.S. Department of Health, Education, and Welfare. Preliminary Air Pollution Survey of Chlorine Gas. A Literature Review. Contract No. PH 22-68-25, October 1969.

10. Heyroth, F. F. Chlorine, CL_2, in Industrial Hygiene and Toxicology, Vol. II, 2nd ed. (New York: Intersicence, 1963.)

11. Kowitz, T. A., et al. Effects of Chlorine Gas upon Respiratory Function. Arch. Environ. Health 14:545. 1967.

12. Manufacturing Chemists Association. Chemical Safety Data Sheet SD-80, Chlorine. Washington, D. C. 1960.

13. The Chlorine Institute, Inc. Chlorine Manual. New York. 1959.

14. Beck, H. Experimental Determination of Olfactory Threshold for Some Important Irritant Gases (Chlorine, Sulfur Dioxide, Ozone, Netrosyl-sulphuric Acid) and Their Manifestations of the Effect of Law Concentrations in Maa, Thesis, Wurgburg. 1959.

15. Takhirov, M. T. Determination of Limits of Allowable Concentrations of Chlorine in Atmospheric Air. U.S.S.R. Literature on Air Pollution and Related Occupational Dieseases 3:119. 1960.

16. U.S. Department of Health and Human Services. NIOSH/OSHA Pocket Guide to Chemical Hazards. September 1978.

SECTION 3

KRAFT PULPING PROCESSES

There are five major processes and several minor processes within the kraft pulp mill. The major processes are wood handling, pulping, chemical recovery, causticizing, and power generation. The minor processes include bleaching and raw material handling. Figure 3-1 is a simplified diagram of the kraft pulping process.[1] This section presents descriptions of these processes and discussions regarding the sources of emissions, the control techniques, the potential malfunctions, and the inspection techniques to be used for each process.

3.1 WOOD HANDLING DEPARTMENT

This subsection describes the processes used to receive, prepare, and transport logs to the pulping department. These processes include debarking, chipping, screening, transfer, feed preparation, and storage. Most of the emissions in the wood handling department are fugitive. The control measures generally consist of containment and water.

The major malfunctions generally involve the pluggage of the chip transfer system and discharge of the chips from the cyclone exit. The inspection of the wood handling department consists of a visual evaluation of the fugitive dust sources and a verification that the prescribed containment has not been removed. Inspections of the wood handling department are generally Level I Inspections.

3.1.1 Process Description

The major processes within the wood handling department are described briefly.

3.1.1.1 Debarking--

Depending on the location of the pulp mill with respect to the wood supply, wood is transported to the mill by railcar, truck, or barge in the

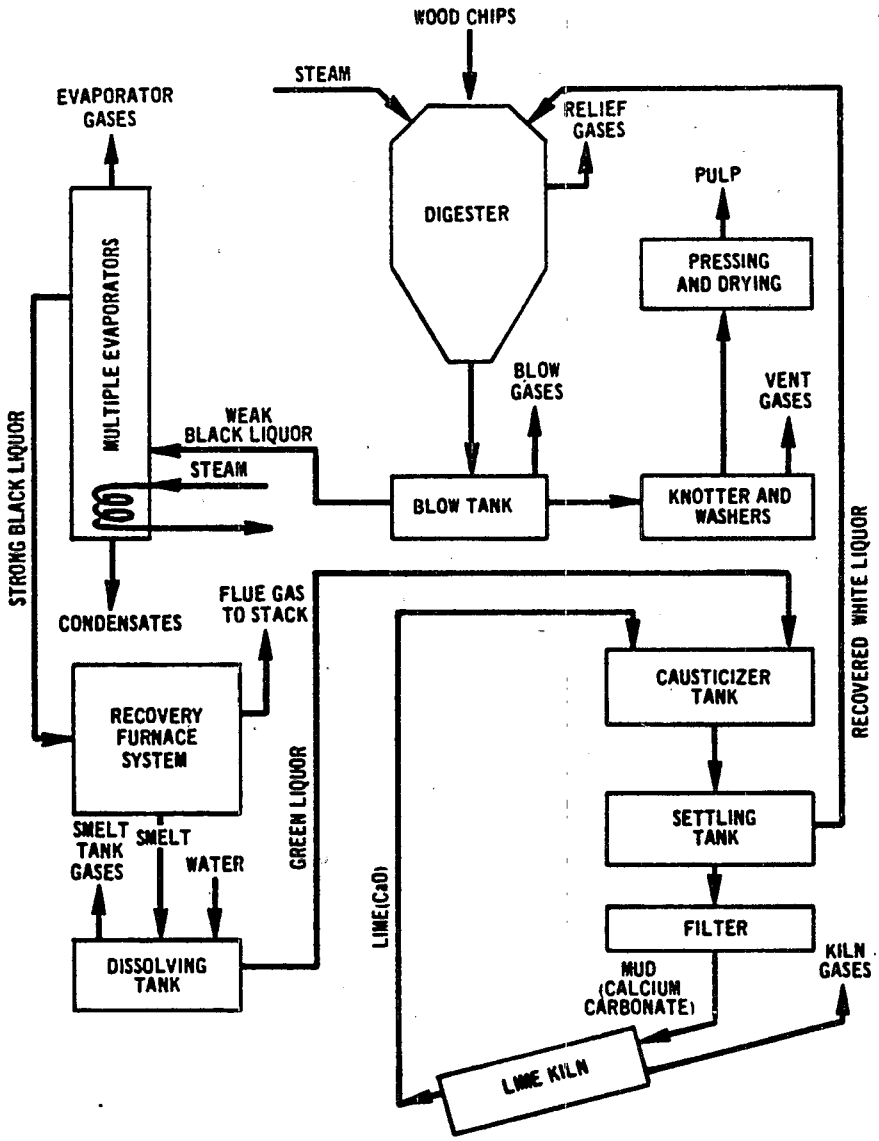

Figure 3-1. Kraft pulping process.[1]

form of chips, sawdust, shavings, or roundwood (logs). Roundwood, generally in four to eight foot lengths, is usually debarked before it is used in pulp manufacturing. Prior to the debarking, various techniques can be used to soften the bark. These include:

- Spraying the logs with water
- Soaking the logs in ponds
- Steaming the logs in special chambers

After the logs are softened, they must be slashed or cut into 4 to 8 foot lengths.

Because bark has very little useful fiber, and it contains dirt that reduces the overall pulp quality, debarking is used to improve the quality of the pulp. Several types of debarking machines are commonly used: drum, bag, ring, cutterhead, hydraulic, and knife debarkers.[2] One of the most widely used is the drum debarker (Figure 3-2). The logs are fed into an open-ended horizontally rotating cylinder shell that is 8 to 16 ft in diameter and 22 to 75 ft long. The tumbling action of the logs removes the bark by abrasion. The logs move toward the discharge end during the process, and the debarked logs are expelled. The bark removed from the logs falls through slits located along the entire length of the cylinder. Inadequately debarked logs are returned for reprocessing.

The debarking drums can be constructed of either staved sections or enclosed vat sections. Staved sections promote tumbling of the logs against each other, which removes loose pieces of bark. The enclosed vat sections are used to soak the logs in a pool of warm water to thaw the bark at mills located in areas where freezing temperatures are common. If the bark is to be used as boiler fuel, presses are often used to remove the moisture.

Figure 3-3 depicts a bag debarker that abrades the bark from the logs by jostling and rotating. The removed bark falls through holes in the base of the machine, and operation can be batch or continuous, wet or dry. Water is frequently used to thaw frozen bark.

Ring debarkers, shown in Figure 3-4, remove bark by a scraping action. Individual logs are fed axially through a rotating ring having equally spaced arms held under pressure. The removed bark is either flung from the machine or allowed to fall onto a conveyor below.[2]

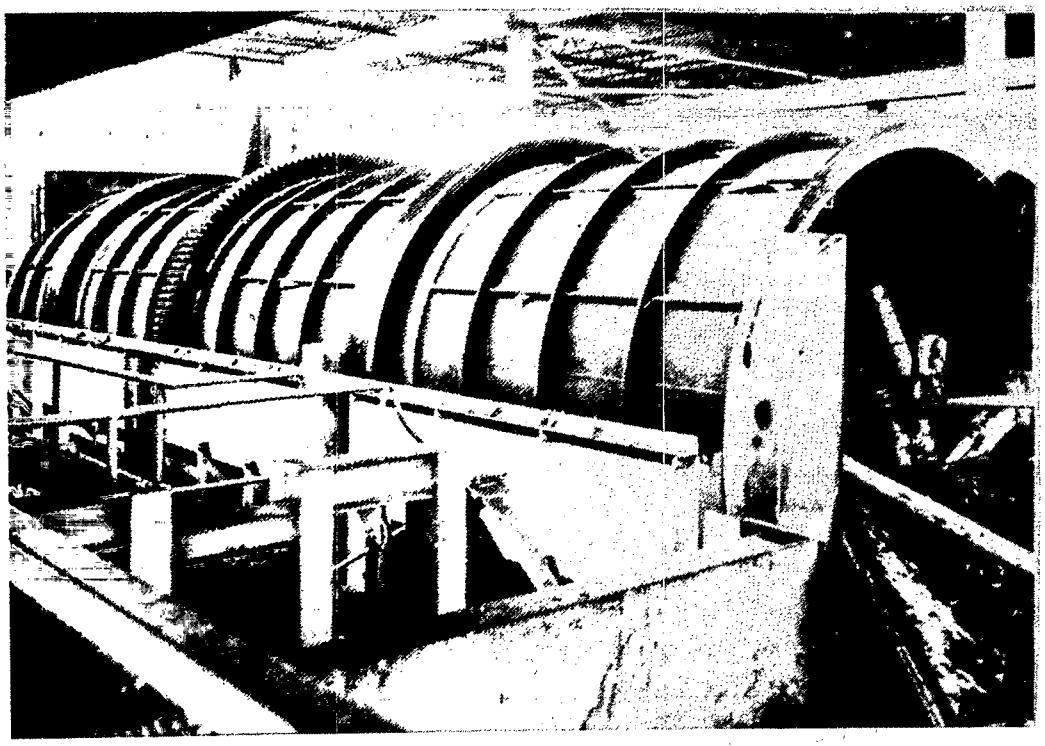

Figure 3-2. Drum debarking.

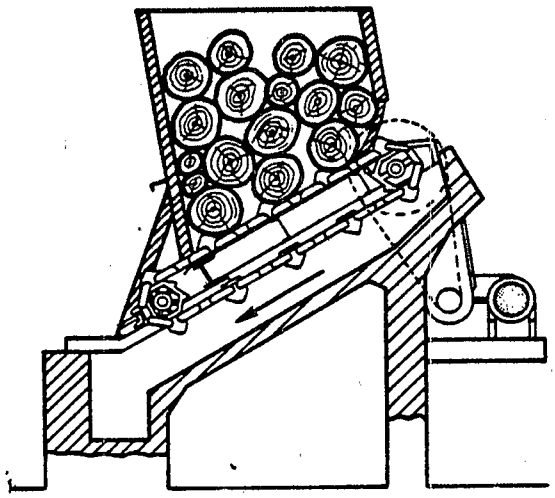

Figure 3-3. Bag debarker.

Source: Joint Textbook Committee of the Paper Industry, the Pulping of Wood, 1969. Reproduced with permission of McGraw-Hill.

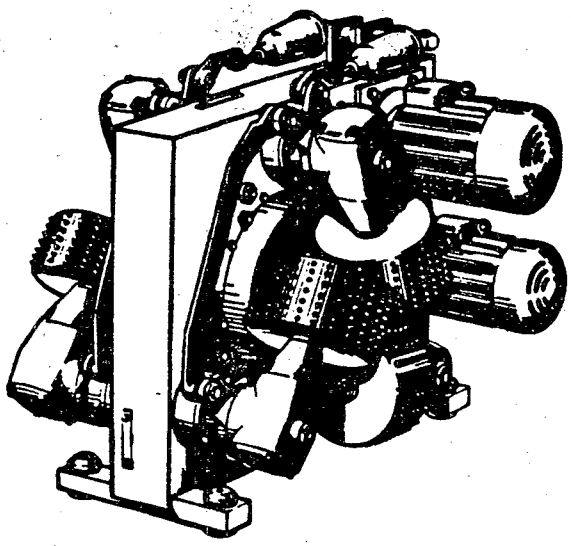

Figure 3-4. Ring barker.

Source: Joint Textbook Committee of the Paper Industry, the Pulping of Wood, 1969. Reproduced with permission of McGraw-Hill.

Figure 3-5 shows a cutterhead machine. Bark is removed from one log at a time by the milling action of the cylindrical cutterhead. Cutting edges are mounted on the longitudinal axis, which rotates parallel to the axis of the log. The removed bark is carried away by a conveyor.

Hydraulic barkers, depicted in Figure 3-6, blast the bark from the log by directing a high-pressure water stream at the surface. The logs are debarked one at a time. The water then washes away the removed bark.

Figure 3-7 shows a knife debarker that uses radially mounted knives to strip bark and wood from the surface of the log. The knives are mounted on a rotating disk.[2]

If the debarked logs have diameters too large to enter the feed spout of the chipping equipment, they are sent to a splitter that quarters them. Debarked logs that are not needed immediately are stored for later use.

3.1.1.2 Chipping--

After the logs have been debarked, they must be reduced in size so that cooking chemicals can easily penetrate the wood fibers to separate lignin and carbohydrates from the cellulose. Chippers, which will accept 4- to 8-foot

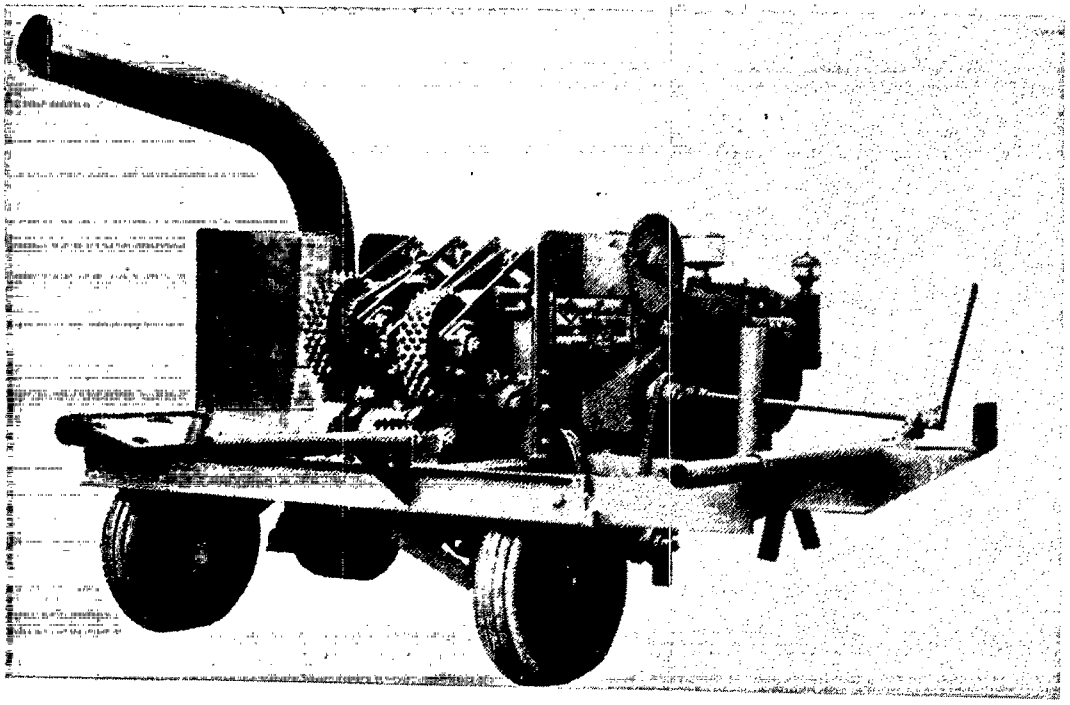

Figure 3-5. Cutterhead barker.

Source: Joint Textbook Committee of the Paper Industry, the Pulping of Wood, 1969. Reproduced with permission of McGraw-Hill.

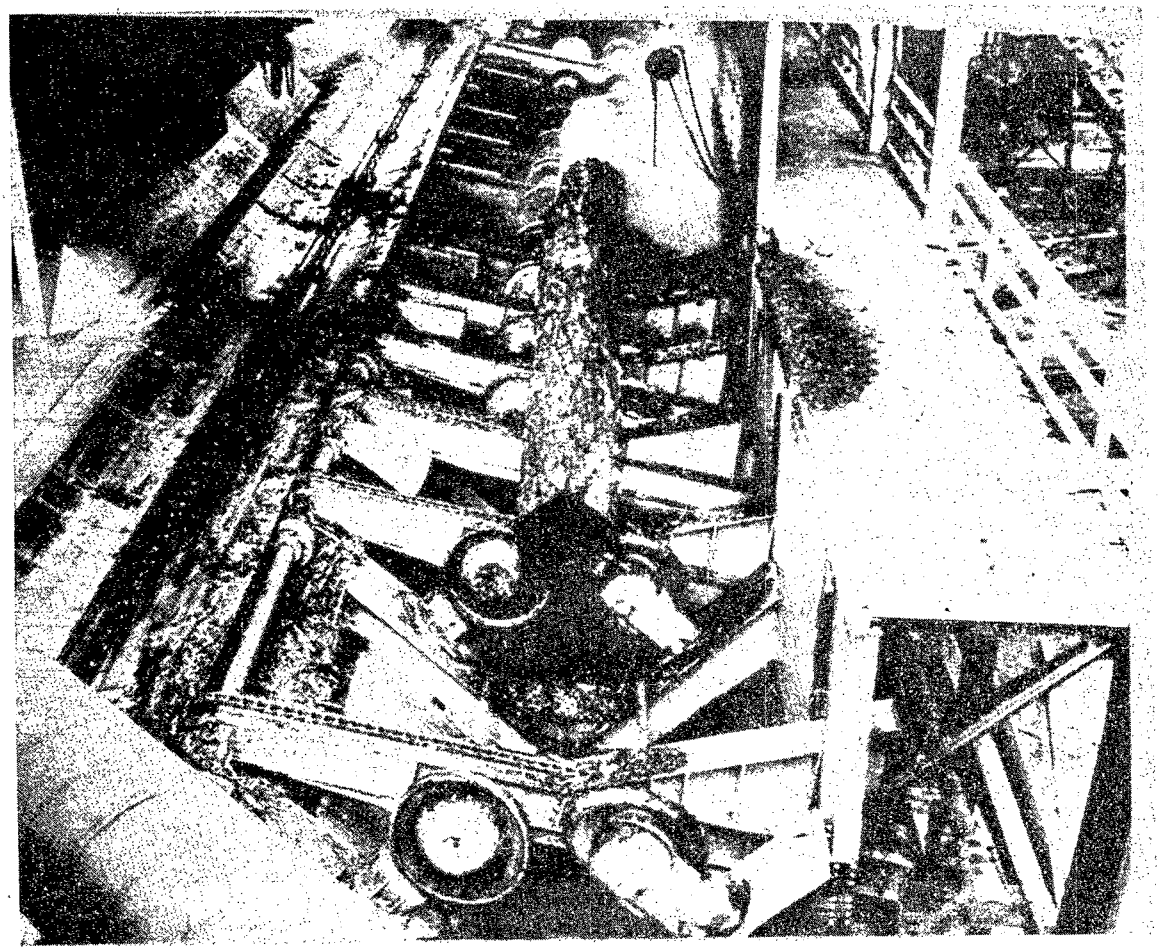

Figure 3-6. Hydraulic barker.

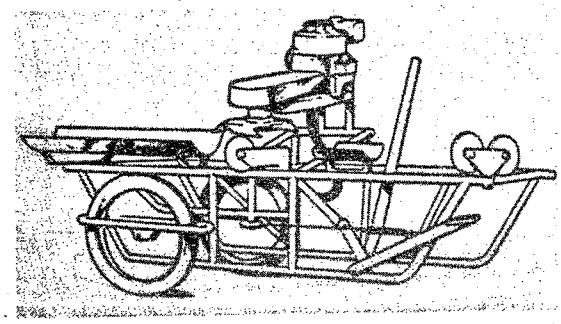

Figure 3-7. Knife barker.

Source: Joint Textbook Committee of the Paper Industry, the Pulping of Wood, 1969. Reproduced with permission of McGraw-Hill.

debarked logs, use powerful high-speed rotating knives to reduce the wood to a uniform size (about 5/8 to 3/4 inch long by 1/8 inch thick).

Among the variety of chippers used, the most common is the Norman disk chipper (Figure 3-8). The close spacing of the knives holds the log steady and prevents bouncing in the feed spout. In operation, each knife moves through a section of the log in the same direction as its bevel. The logs are cut against the grain at an angle of 35 to 52 degrees relative to their axis. At every point along the cutting edge, the bevel is directed toward the edge of the next chip slot. Every point along the knife edge exerts the same force in pulling the log into the disk. This technique reduces the bruising of the chip fibers and results in a stronger pulp.

Drum chippers (Figure 3-9) consist of an open-ended drum that rotates at 20 to 40 rpm. The drum chipper is fitted with several equally spaced cutting knives on the periphery that cut parallel to the grain of the log. The cutting assemblies consist of front knives with three cutting edges that cut trapezoidal grooves in the wood to form chips. The remaining wood is sliced off by a trailing knife to form additional chips.

The spiral horizontal parallel (HP) chipper (Figure 3-10) cuts parallel to the grain. Wood is fed into the disks mounted on a horizontal shaft arranged in a V shape. Two or more rows of knives are mounted on each disk in a spiral formation.

3.1.1.3 Knotting and Screening--

After passing through the chipper, the wood contains fines, slivers, and oversized chips. A screening operation is performed to separate rejects and fines from properly sized chips. Fines are generally less than 1/8 inch in diameter and are usually pulped separately for low-strength paper, or are burned in the bark boilers. Oversized chips are separated and removed for rechipping or recrushing and rescreening.

Rechipping often damages the chips and results in increased fines. Several types of rechippers are currently being used, but the chips receive less damage if the rechippers use knives rather than blunt hammers.

Screening generally involves two decks. The upper deck captures the oversized chips and the lower deck retains proper sized chips. Fines drop into a collection hopper below the lower deck. The kinds of screening equipment, classified according to movement mechanism, are rotary-drum, shaker,

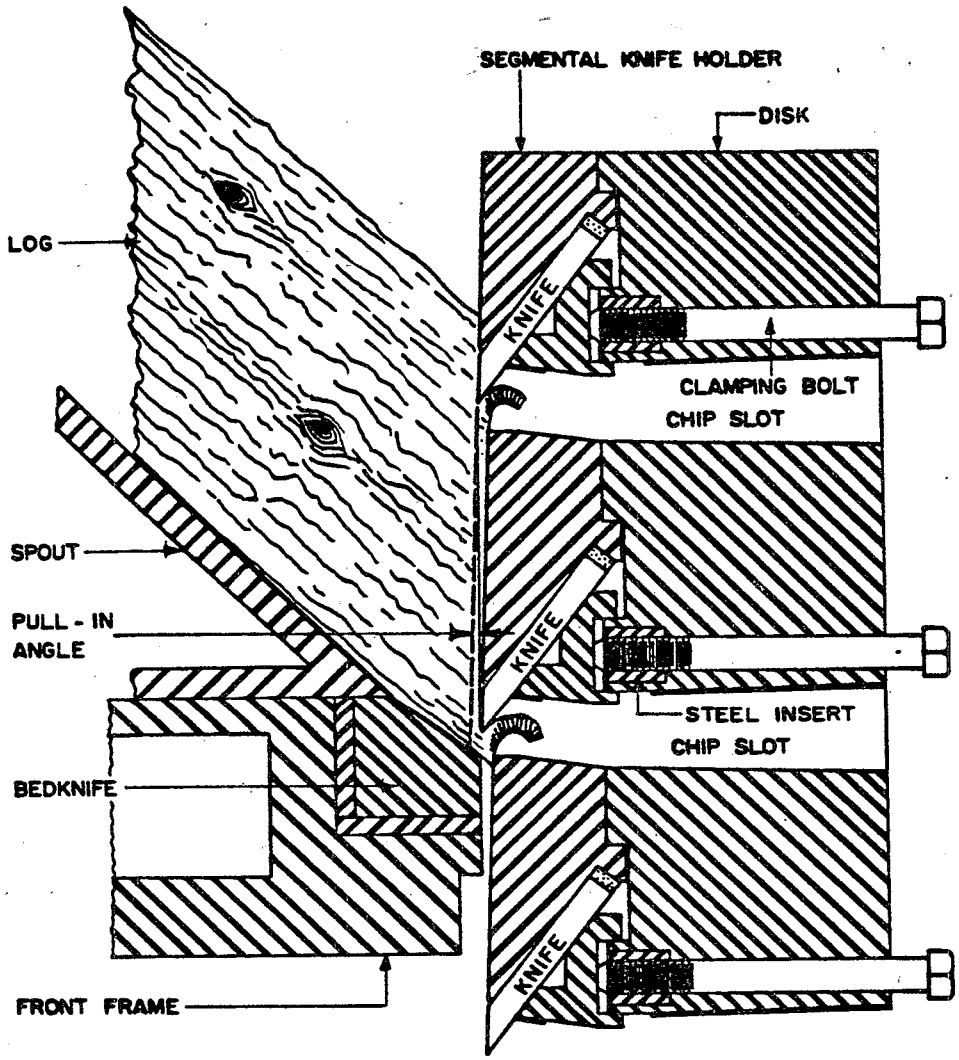

Figure 3-8. Norman disk chipper.

Source: Reproduced with permission of Carthage Machine Company, Inc.

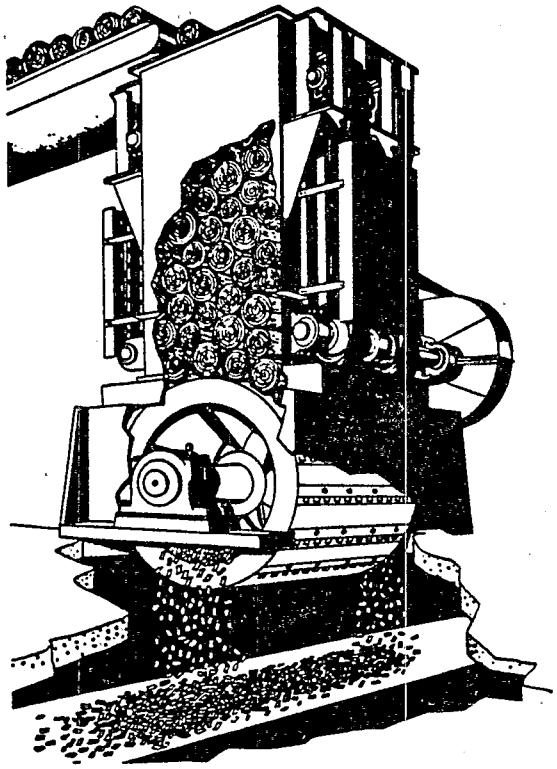

Figure 3-9. Drum chipper.

Source: Reproduced with permission of Koehring-Waterous Ltd.

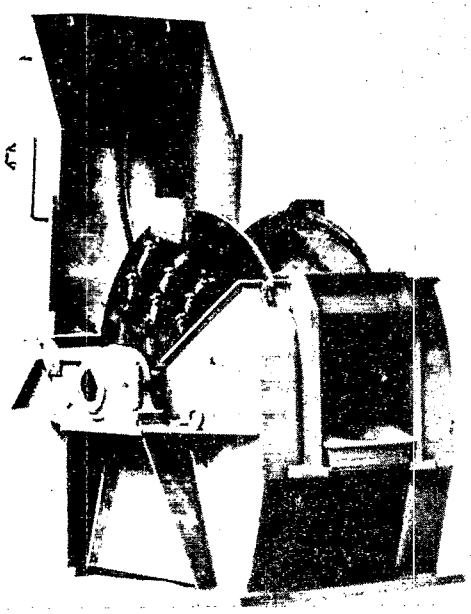

Figure 3-10. Horizontal parallel chipper.

Source: Reproduced with permission of Joint Textbook Committee of the Paper Industry, the Pulping of Wood, 1969.

vibratory, and gyratory. Vibratory and gyratory are the most efficient and the ones most often used. Vibratory screens (Figure 3-11) are inclined at approximately 25 degrees from the horizontal.[6] Gyratory screens (Figure 3-12) are inclined at 4 degrees from horizontal, and they use rubber balls that deflect against the underside of the wire mesh deck to dislodge chip particles that plug the openings.[2,7]

3.1.1.4 Storage and Transfer--

Chip feeders operating at a constant and uniform rate are used to move the chips from storage. Various equipment is used to accomplish this task, including a traveling screw, a rotary plate, a stoker, a multiple screw, and parallel drag chains. Each has its own technique for moving the chips.

Pneumatic conveying is frequently used when the chips are stored outside. A pneumatic system consists of a pipeline with a high-velocity airstream that is generated by a blower. The chips are fed into the airstream and transported to the desired point of exit.

Chips, shavings, and sawdust arrive at the mill in freight cars, semi-trailers, or trucks and must be removed to storage areas for future use. Some of the techniques used to transport the chips, shavings, and sawdust are:[8]

- Chip digger with suction unloading (for boxcars)
- Rotating nozzle suction unloading (open-top cars)
- Hydraulically operated truck dumper
- Rotary freight car dumper with gravity-dump pit
- End-dump freight car with pit.

Once the chips are removed from their transporting vehicle, they can be transported to bins, outside piles, or silos by belt conveyor, bucket elevators, or pneumatic systems. Usually the bins are loaded by overhead conveyors and unloaded by a slot at the bottom that uses a traveling screw.[8]

Pnuematic systems use cyclones as primary receivers to separate chips from the transport gas stream. The cyclones are 8 to 14 ft in diameter and typically operate at gas volumes of 4000 to 11,000 acfm. The inlet velocities are on the order of 100 to 160 ft/s. In this application, the cyclones are used as product transfer and are not considered an air pollution control device. Typical transport rates are 50 to 100 tons/h. The cyclone may be

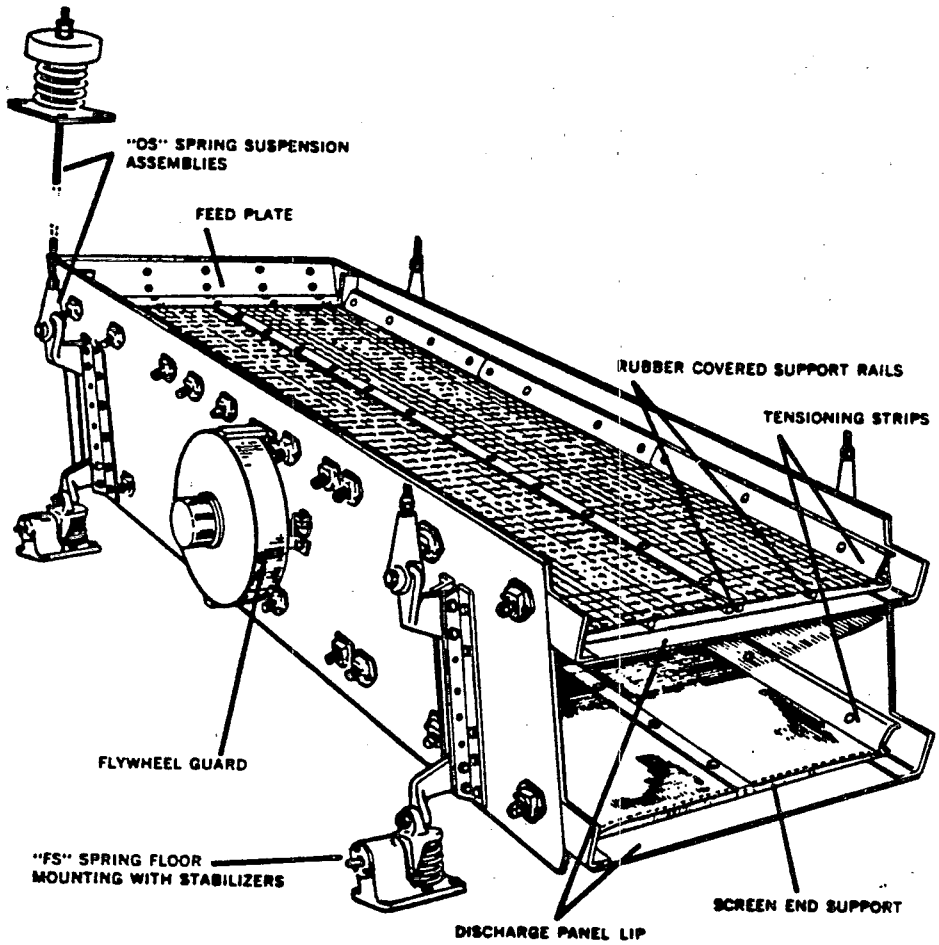

Figure 3-11. Vibratory chip screen.

Source: Reproduced with permission of W. S. Tyler Company.

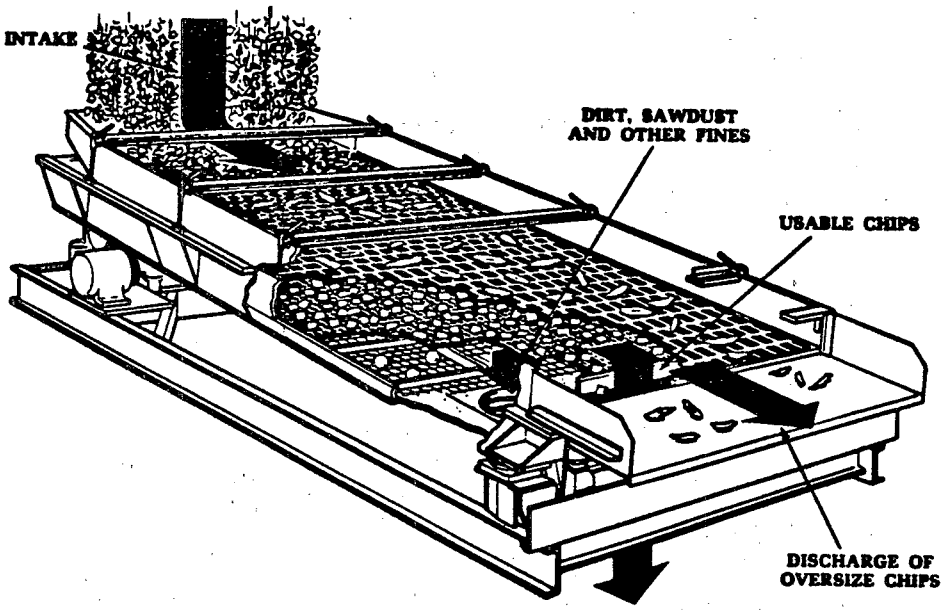

Figure 3-12. Gyratory chip screen.

Source: Reproduced with permission of ROTEX, Inc.

used to transfer the material to screens, the hammer mill, or the chip storage bins.[9]

Figure 3-13 shows a typical end-dump rail car unloading system, and Figure 3-14 shows a hydraulic truck dump system. Chips received in rail cars can be unloaded by a rotary rail car dump (Figure 3-15).[10]

Figure 3-16 shows the normal material and air flow at a small wood-handling yard.[9]

3.1.2 Sources of Emissions and Control

Most of the emissions from a woodyard, except for those from pneumatic conveying systems, are fugitive. In general, control measures consist of containment of sources and the use of water on haul roads and other traveled areas. Water may also be used on the debarkers to reduce dust and to wash the logs.

Chips that are received dry (shaving and saw dust) are also potential fugitive sources. Water is effective in reducing the emissions at transfer points.

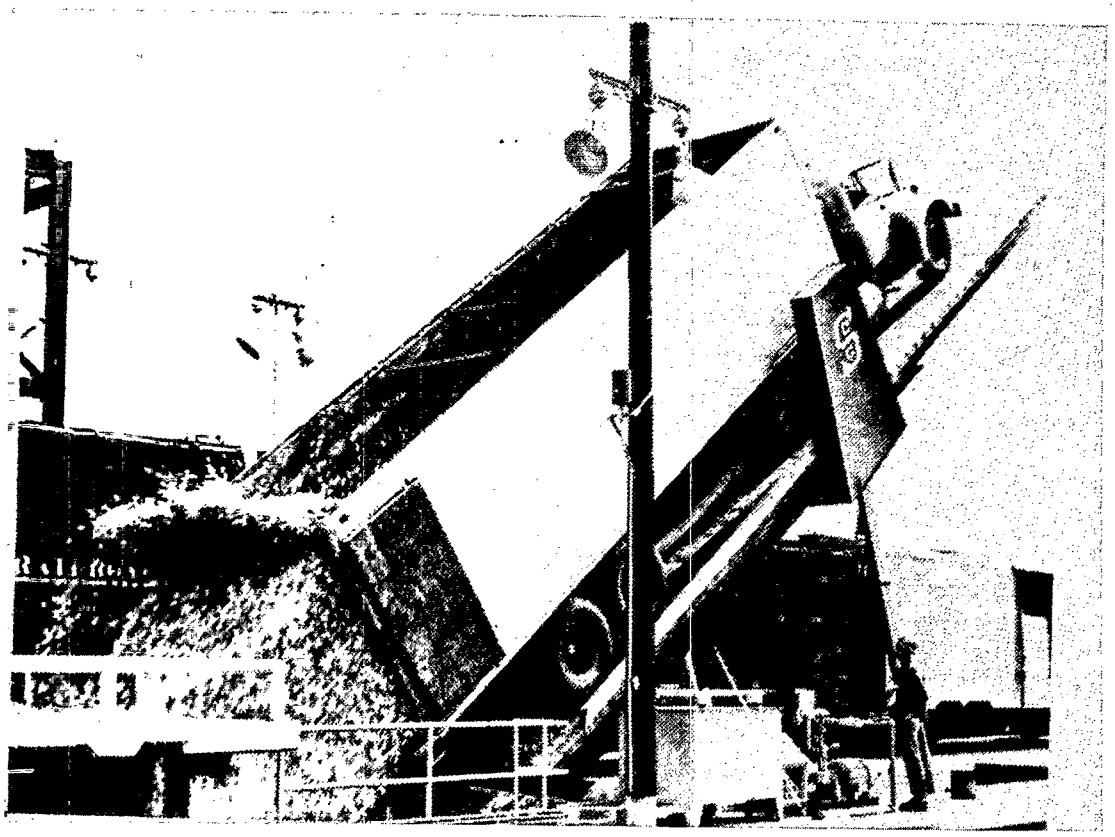

Figure 3-13. Hydraulic dump truck for chips.

Source: Reproduced with permission of Screw Conveyor Corporation.

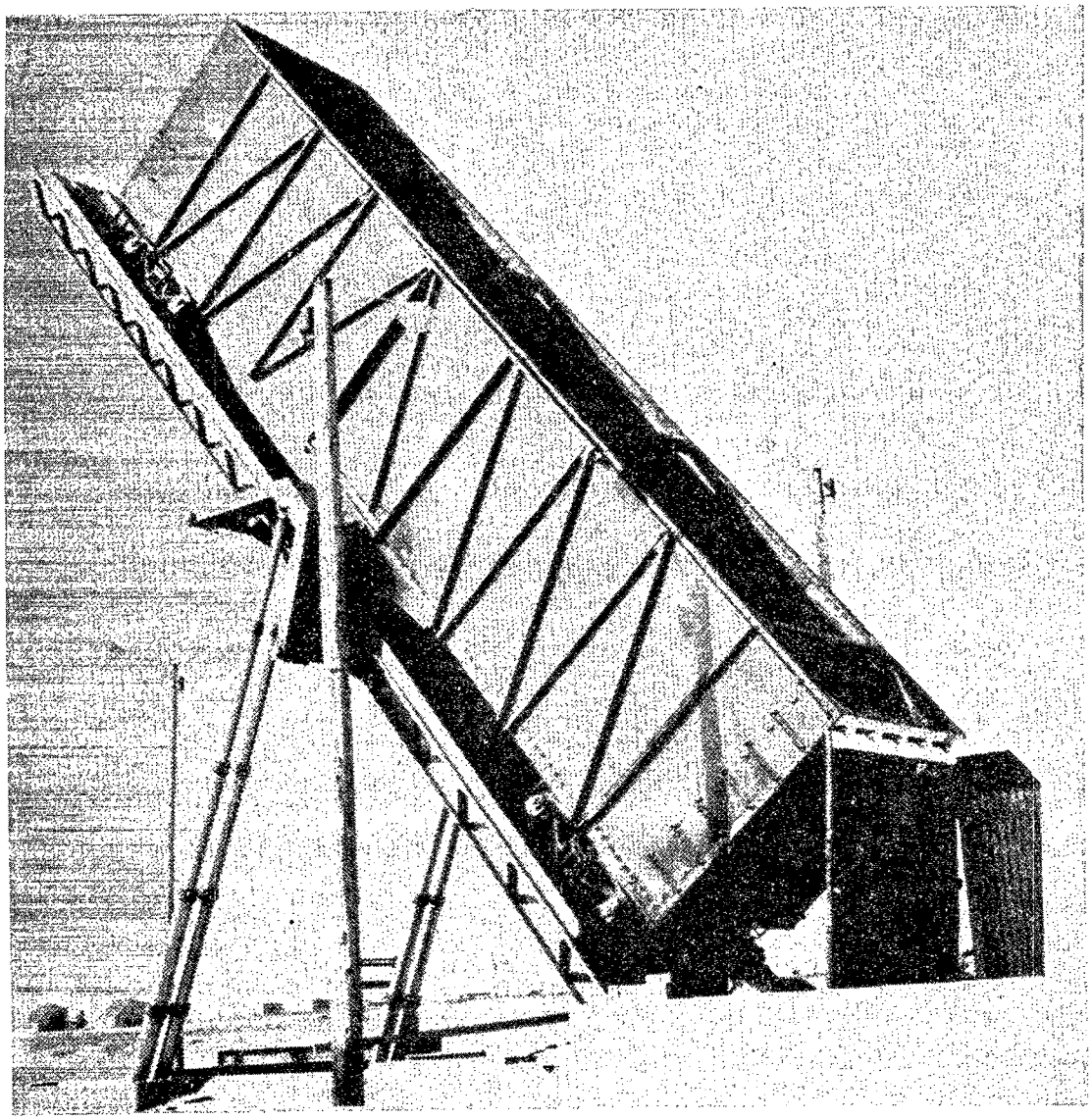

Figure 3-14. End-dump freight car and unloading platform for chips.

Source: Joint Textbook Committee of the Paper Industry, the Pulping of Wood, 1969. Reproduced with permission of McGraw-Hill.

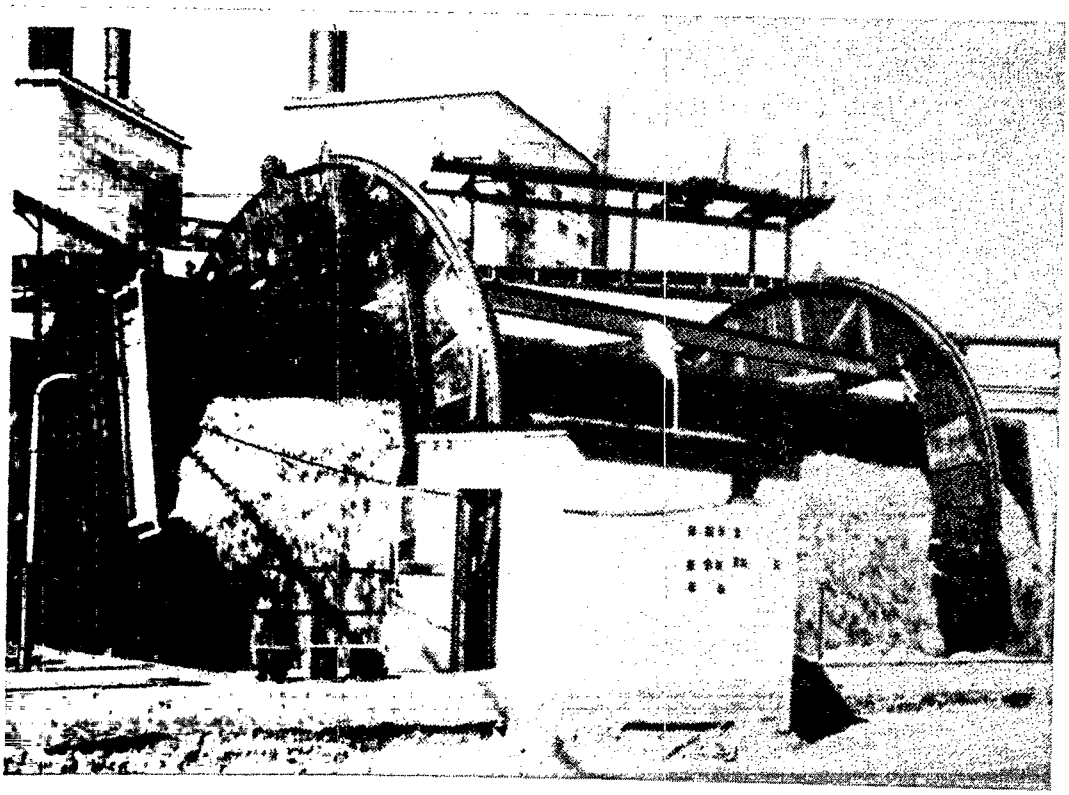

Figure 3-15. Rotary freight car dryer for chips.

Source: Joint Textbook Committee of the Paper Industry, the Pulping of Wood, 1969. Reproduced with permission of McGraw-Hill.

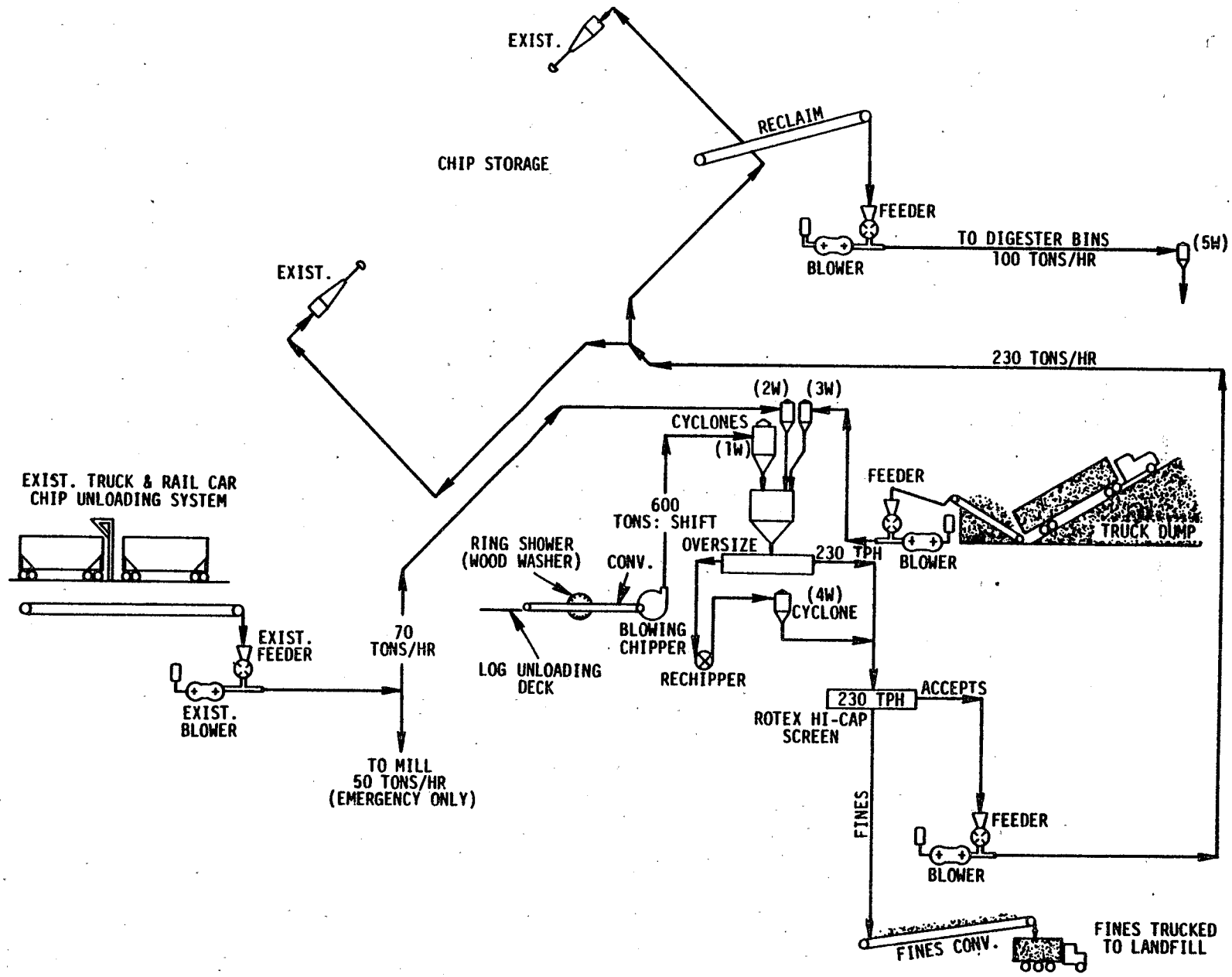

Figure 3-16. Typical material and air flow for small woodyard.[9]

In urban areas, more control is needed because of the potential nuisance to surrounding property owners. As a result, several plants within urban areas have paved the haul roads and chemically stabilized or sprayed the storage areas. Periodic sweeping and/or wetting of these haul roads has been effective in reducing emissions resulting from vehicular traffic. Minimiaing the dust around the plant side has the added benefit of reducing the carryover of dust and dirt into the pulping process.

Emissions from the pneumatic conveying cyclone are generally controlled by the use of water sprays. These water sprays can reduce cyclone emissions by 95 percent. Grain loadings from a chip transfer cyclone (14 foot diameter and 10,000 acfm) handling 100 tons/h of dry chips can range from 0.0003 to 0.034 gr/dscf. The lower value is associated with a cyclone using water sprays. A typical water injection rate is approximately 4.5 gpm (0.5 gal/1000 acfm). Green chip transfer through the same system generate an emission rate of 0.002 gr/dscf.[9]

3.1.3 Malfunctions

Malfunctions that can occur in the wood handling department involve the pluggage of the chip transfer systems and the discharge of the chips from the cyclone exit. These malfunctions usually cause a fallout problem on the plant premises, which normally can be corrected quickly.

When water sprays are used to control fugitive dust from the transfer and debarker systems, provisions must be made to prevent freezing during the winter months.

3.1.4 Inspection of Wood Handling Department

The inspection of the wood handling department consists of a visual evaluation of the fugitive dust sources and a verification that the prescribed containment has not been removed. If water spray systems are used, the inspector should verify the location of spray nozzles and visually determine if the water spray pattern is adequate.

The water flow rate should be recorded along with the water supply pressure for each system. Table 3-1 provides a checklist for process weight and control variables of the emission sources in the wood handling department. Generally the information listed in Table 3-1 can be obtained during a Level I or II inspection.

TABLE 3-1. CHECKLIST FOR INSPECTION OF WOOD HANDLING SYSTEMS

Debarker:	Type _____ Process rate _____ Control method _____ Water flow rate _____ gpm Water pressure _____ psig
Chipper:	Type _____ Process rate _____ Control method _____ Water flow rate _____ gpm Water pressure _____ psig
Screens:	Type _____ Process rate _____ Reject rate _____ Control method _____
Rechipper:	Type _____ Process rate _____ Control method _____
Truck unloading:	Type _____ Process rate _____ Control method _____
Rail car unloading:	Type _____ Process rate _____ Control method _____

Pneumatic transfer: (more than 1 repeat)

Process from _____ to _____

Process rate _____ tons/h

Gas volume _____ acfm

Cyclone diameter _____ ft

Inlet deminsions _____ x _____ in.

Inlet area _____ ft^2

Water spray flow rate _____ gpm

Duct leaks _____ Yes _____ No

3.2 PULPING DEPARTMENT

The pulping process involves many separate processes, including the cooking of the chips to produce pulp, recovery of cooking chemicals, and concentration of spent liquors. For simplicity, all of these processes are included in this subsection.

The primary emissions from the pulping department are TRS compounds which can be controlled by 1) reduction in quantity through process operation, 2) scrubbing with fresh water or alkaline solutions, or 3) incineration. The malfunctions in the pulping department involve the digester relief systems, digester blow system (hot water accumulator and blow tank), multiple-effect evaporator system, black liquor oxidation system, and the TRS Vent Control System. In general, all the major malfunctions associated with the above systems will tend to increase TRS emissions in one way or another. Several tables are presented in Section 3.2.3 that identify the potential malfunctions for each type of system, the primary effects of these malfunctions, and the subsequent results in terms of TRS emissions.

The inspection of the pulping department is generally based on information concerning equipment specifications, process procedures, process weights, and/or control equipment bypass and malfunction. Because the inability to obtain physical measurements with hand held equipment in the pulping department, inspections in the pulping department are generally limited to Level I or II. A series of check lists are presented in Section 3.2.4 that will aid the inspection in obtaining whatever information is available for the major systems in the pulping department.

3.2.1 Process Description

3.2.1.1 Pulp Digester--

The two major components of pulpwood are cellulose and lignin. The fibers of cellulose are bound by the lignin in the wood. Figure 3-17 presents a schematic of the pulping process. Wood chips are added to a reaction vessel (digester) containing cooking chemicals comprised of about 66 percent sodium hydroxide (NaOH) and 33 percent sodium sulfide (Na_2S). Some recycled black liquor is also added to the vessel. The mixture is heated to 340° to $350^{o}F$ under 100 to 135 psig of steam for 1½ to 3 hours. This process removes the lignin and carbohydrates from the pulp to free the cellulose. Sodium

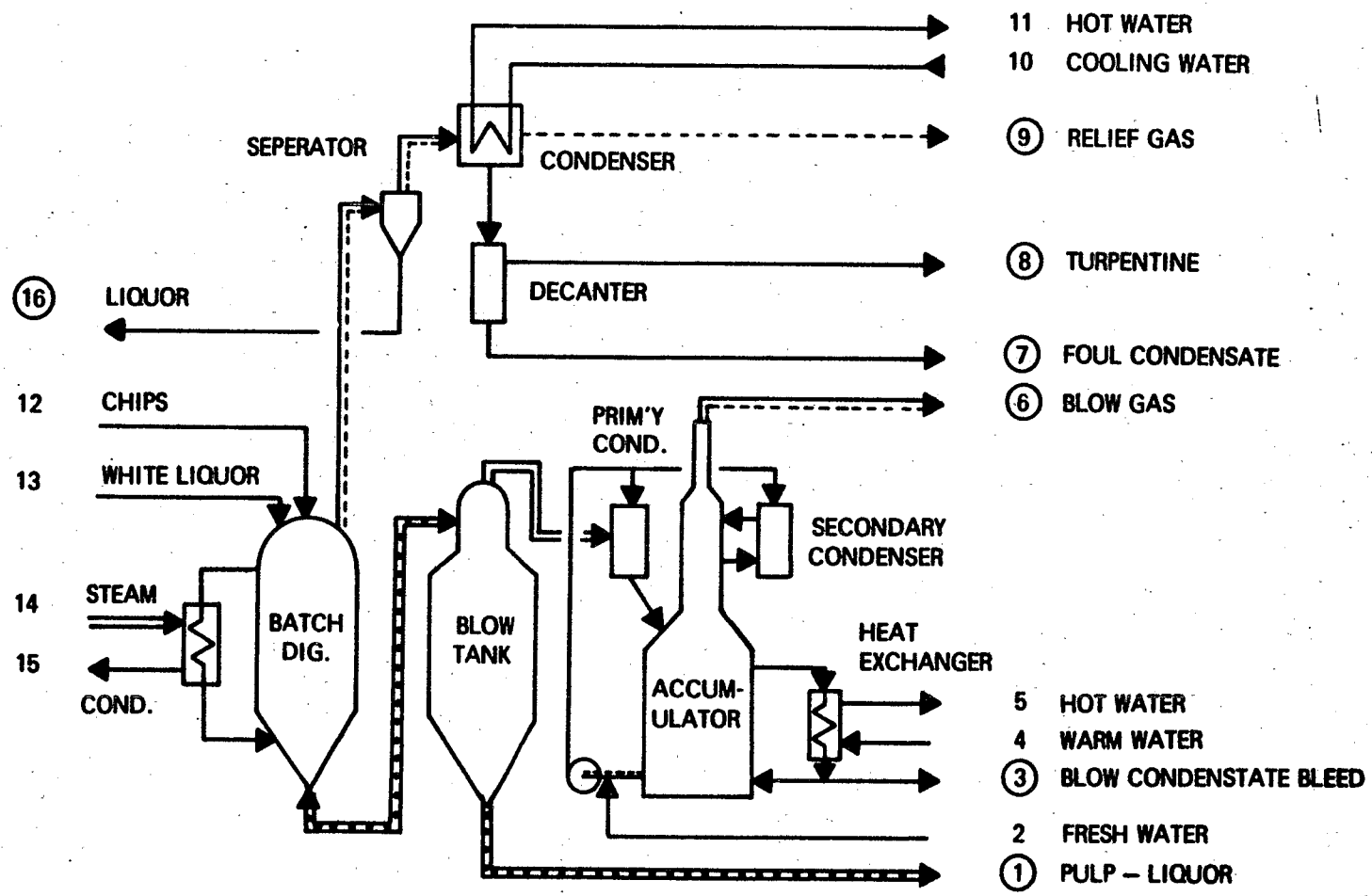

POINTS OF POSSIBLE ODOR RELEASE ARE ENCIRCLED.

Figure 3-17. Pulping process.[12]

hydroxide breaks down the fibers in the wood. Sodium sulfide, by double decomposition reaction, breaks down to liberate NaOH as it is consumed. Thus Na_2S acts as a reservoir for NaOH so that excessive amounts are not added, which would weaken the pulp. Sodium sulfide is responsible for the strength attributable to kraft pulp.

The digestion process can be either batch or continuous, and the digester can be heated directly or indirectly. The digester generally has a volume of between 3000 and 6500 ft^3 and will normally produce between 8.5 and 17.9 tons of unbleached air-dried pulp per blow. The digesters are charged with white liquor, chips, and recycled black liquor. Table 3-2 shows the typical liquor requirements for bleached paper and bag paper.[2] The liquor requirements, pulp yield, pulp strength, and cooking time are mill-specific.

TABLE 3-2. TYPICAL DIGESTER LIQUOR REQUIREMENTS[2]

Pulp type	Total liquor per blow, ft^3/TADP	White liquor per blow, ft^3/TADP	Black liquor per blow, ft^3/TADP
Bleached papers	100 - 235	80 - 120	5 - 110
Bag paper	80 - 170	65 - 115	5 - 90

A typical digester temperature/pressure chart for repeated digester batch cycles is shown in Figure 3-18.[2] The total number of potential digester blows per day may be calculated from the number of digesters and the average digester cycle time, including charging, cooking, and blowing.

Chips are charged to the digester from overhead chip bins in the pulp building. Minor steam is lost and odors are generated during charging. Removable charge chutes are used to transfer the chips. Figure 3-19 shows a typical digester charging room floor.

3.2.1.2 Batch Digester (Blow)--

During batch digestion, the pulp is held at elevated temperature and pressure. To remove the pulp from the tanks, the digester bottom is opened and the tank pressure is relieved to a blow tank. The process is referred to as a digester blow.

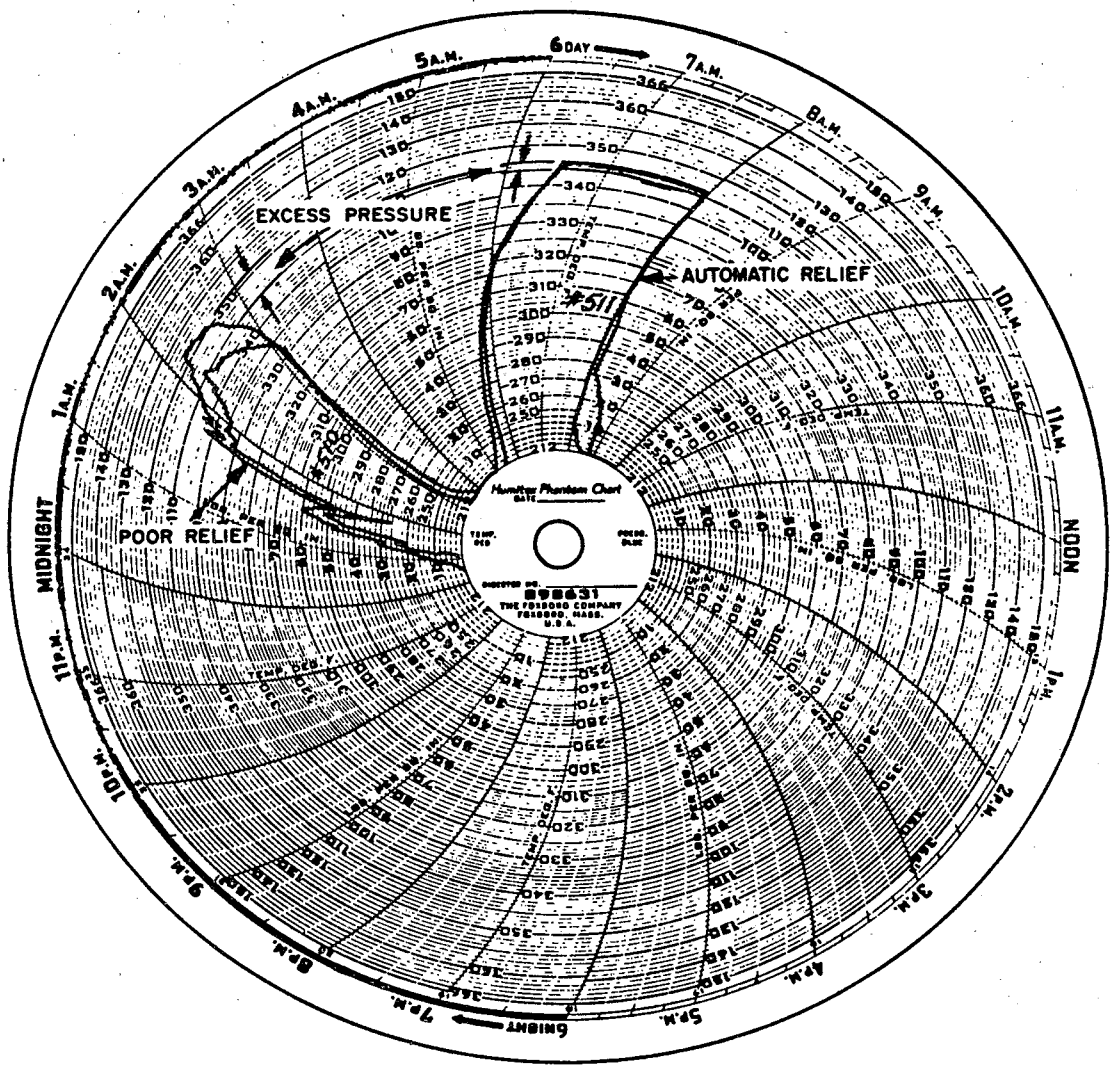

Figure 3-18. Typical digester operating curves.

Source: Joint Textbook Committee of the Paper Industry, the Pulping of Wood, 1969. Reproduced with permission of McGraw-Hill.

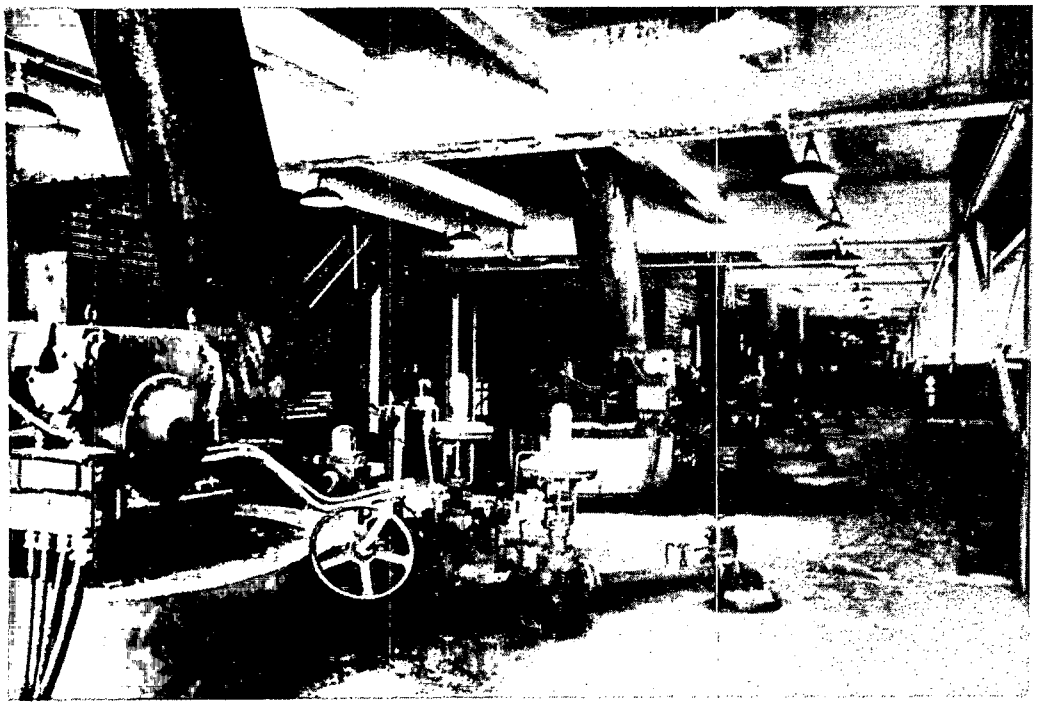

Figure 3-19. Typical digester charging room floor.

Source: Joint Textbook Committee of the Paper Industry, the Pulping of Wood, 1969. Reproduced with permission of McGraw-Hill.

Because the temperature and pressure of the digester contents are quite high, the rapid release of pressure flashes a portion of the water to steam. The amount flashed depends on the blow rate and the initial and final temperature. A large pressure vessel (blow tank) is provided for separation of the pulp from the spent cooking chemicals (black liquor) and to allow expansion volume for the evolved steam. For economical operation of the digester system, the blow tank is equipped with a hot water accumulator (Figure 3-20), which may have both primary and secondary condensers to recover heat from the flashed steam. The primary condenser is generally a direct-contact type and the secondary condenser is a tube and shell design.

Calculation of the exhaust volume from the blow can be based on liquor volume, system mass balance, and specific heats of the materials. After condensing, the gas volume is much lower, and the gas contains equilibrium moisture at 212°F and 1 atm plus any noncondensable gases and trapped air.

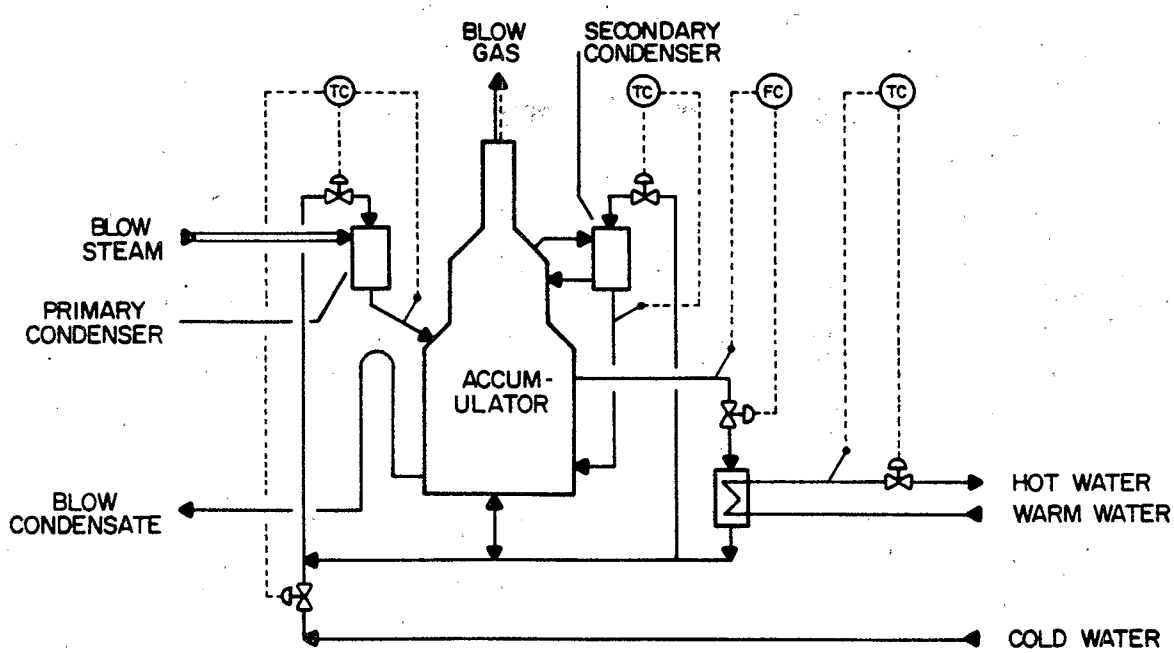

Figure 3-20. Hot water accumulator showing primary and secondary condensers.[12]

The digester blow is a significant air pollution source of TRS compounds. The reaction of the wood with white liquor sulfide generates hydrogen sulfide (H_2S), turpentine, and traces of methanol (CH_3OH), ethanol (CH_3CH_2OH), and acetone (CH_2COCH_3). The composition and quantity of digester gases will differ between batch digesters and continuous digesters. Generation rates will also differ depending on wood type, white liquor sulfidity, final cooking temperature, and cooking time.

The typical blow volume is 90 percent steam. The noncondensable portion of the blow volume is about 95 ft^3/ton of pulp.[12] The blow rate is not constant and reaches a peak during a portion of the blow period. Figure 3-21 shows a typical digester steam flow pattern.[13] The primary and secondary condensers are designed for the peak flow rate.

The digester blow volume may be calculated from the digester operating conditions and a liquor mass balance. Most of the information required to complete the calculation is available from the pulp cooking records and/or digester design data. At the end of the cooking period, the digester is

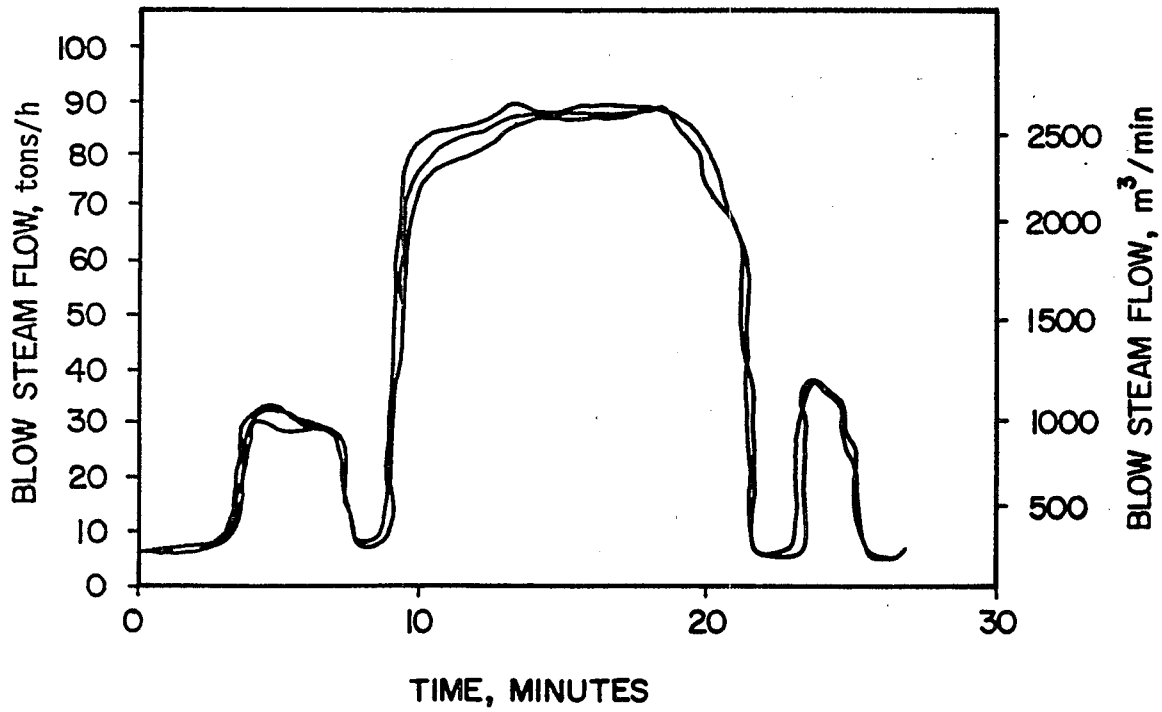

Figure 3-21. Typical batch digester steam flow rate during blow.[13]

discharged into the blow tank and the temperature drops from 350 to 220°F. Some steam is flashed during the blow period. The basic work sheet for calculating blow weight is presented in Figure 3-22.[2] The calculation represents a balance between total heat available from the liquor and total heat available from the pulp and digester shell.

3.2.1.3 Digester Relief and Turpentine Recovery--

The digester cooking cycle generates organic gases as a result of volatilization of wood oils. For maintenance of acceptable cooking pressures, the digester must be periodically vented to the atmosphere. The relief gases are passed through a liquor separator (cyclone) to remove any entrained liquor and fiber (Figure 3-23).[15] From the separator the gases are passed through a surface condenser, which removes the condensable gases (primarily turpentine and water). The condensate is passed to a decanter, where the water and organics are allowed to separate. Crude turpentine is drained off to storage and shipped to refiners.[2,12,14]

A. Weight and specific heat of black liquor discharged:

Lignin, etc.		15,800 lb
Water in chips		26,200 lb
Cooking liquor		59,000 lb
Black liquor		30,000 lb
	Total	131,000 lb
Relief vapor		-1,850 lb
Total weight of black liquor discharged		129,150 lb
Liquor specific heat		0.855

B. Weight and specific heat of moisture-free pulp discharged

Pulp weight	14,400 lb
Pulp specific heat	0.33

C. Weight and specific heat of digester shell

Shell weight	63,270 lb
Shell specific heat	0.117

Mass balance - Blow heat available, 10^6 Btu

Black liquor	(129,150)(0.855)(350-220)	= 14.355
Pulp	(14,400)(0.33)(350-220)	= 0.620
Heat from digester shell	(63,270)(0.117)(350-255)	= 0.705
Total heat		= 15.680

Latent heat of steam at $220^{o}F$ = 965

Weight of steam flashed (excluding noncondensable gases) at $220^{o}F = \frac{15,680,000}{965}$ = 16,250 lb/blow

Figure 3-22. Worksheet for calculation of blow weight (steam).[2]

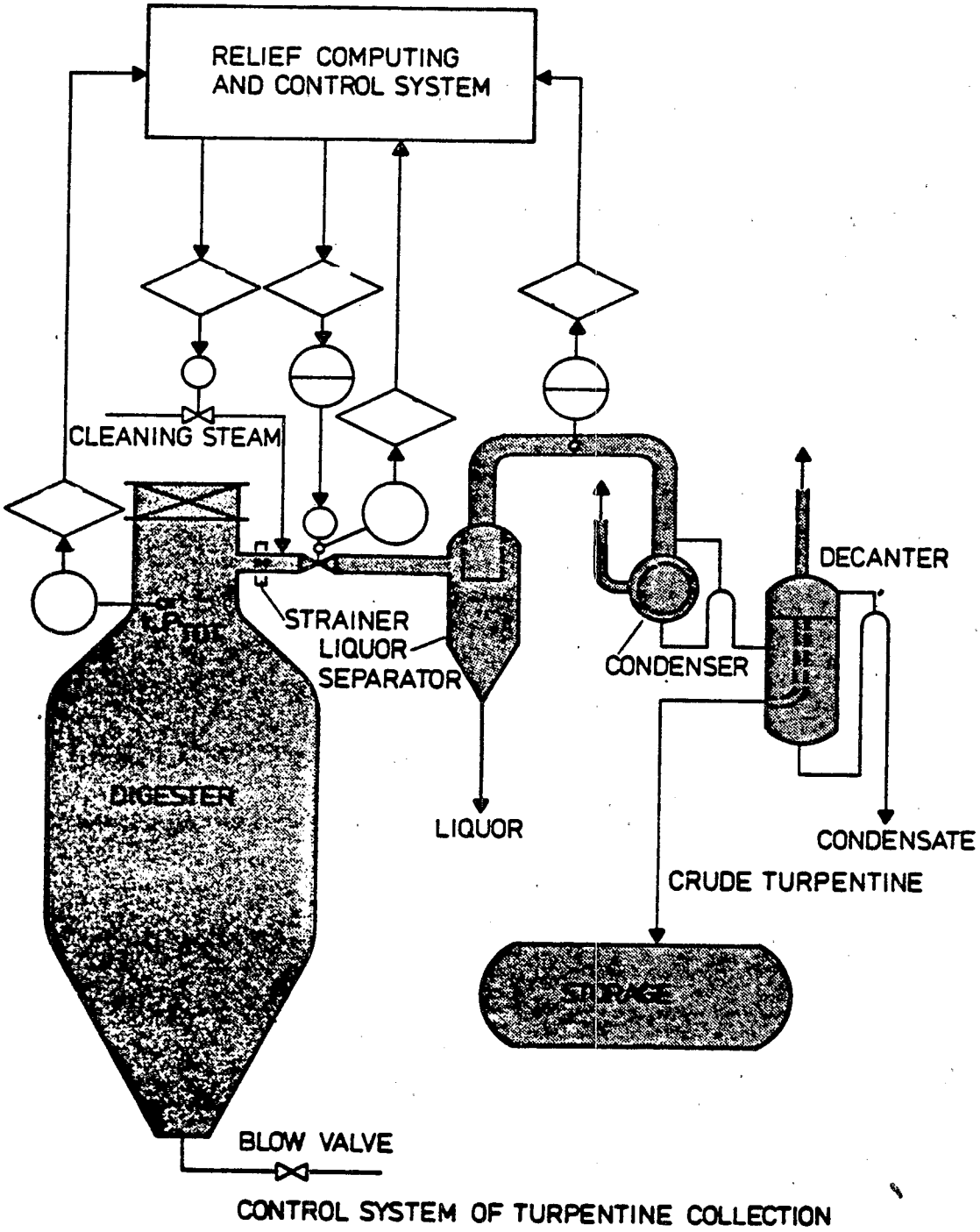

Figure 3-23. Digester relief and turpentine recovery system.[15]

Typical turpentine yields from soft wood pulping are on the order of 2 to 4 gal/TADP.[9] The turpentine yields from hardwood pulping are minimal and recovery is not practiced. Continuous digesters also generate turpentine as a result of continuous relief during pulp blowing. The yield and quality of turpentine from continuous digesters is generally inferior.[16]

The amount of condensate produced by softwood pulping is mill-specific, but is generally about 540 lb/ton of pulp. The volume of noncondensable gases produced is on the order of 32 ft^3/ton of pulp.[12]

The amount of noncondensable organic emissions present in the condenser vent is a function of the condensate outlet temperature. Figure 3-24 shows the relationship between TRS emissions and condenser outlet gas temperature.[17]

3.2.1.4 Continuous Digester--

Continuous digestion presents less of an air pollution problem than batch digestion because the gas flow is regular. Spent liquor from the digester is expanded (flashed) in two stages. The flash from the primary tank is used to impregnate chips in a presteaming vessel prior to digestion. Steam from the secondary flash tank is used for various purposes, such as turpentine recovery, hot water production, additional impregnating steam, etc. In both batch and continuous digestion when soft woods are digested, the condensate undergoes a secondary process that separates the turpentine from water. Figure 3-25 depicts this process.[12]

The water that condenses from the digestion process is used for brown stock (pulp) washing. Prior to being washed, however, the pulp goes through a knotting operation that further dilutes the fiber to 1½ percent by weight and removes oversized chips that have not been completely impregnated with white liquor. These chips are sent back through the digester, and the water is drained into filtration tanks.

3.2.1.5 Pulp Washing--

After cooking, the pulp contains a considerable quantity of chemicals and dissolved waxes, oils, and fatty acid salts. These chemicals are recoverable when converted to their original form through the recovery process.

Pulp from the blow tank is mixed with white liquor and black liquor in the blow tank and transferred to the pulp washing lines. The pulp washing lines are of the displacement-washing type. In this process the liquor and

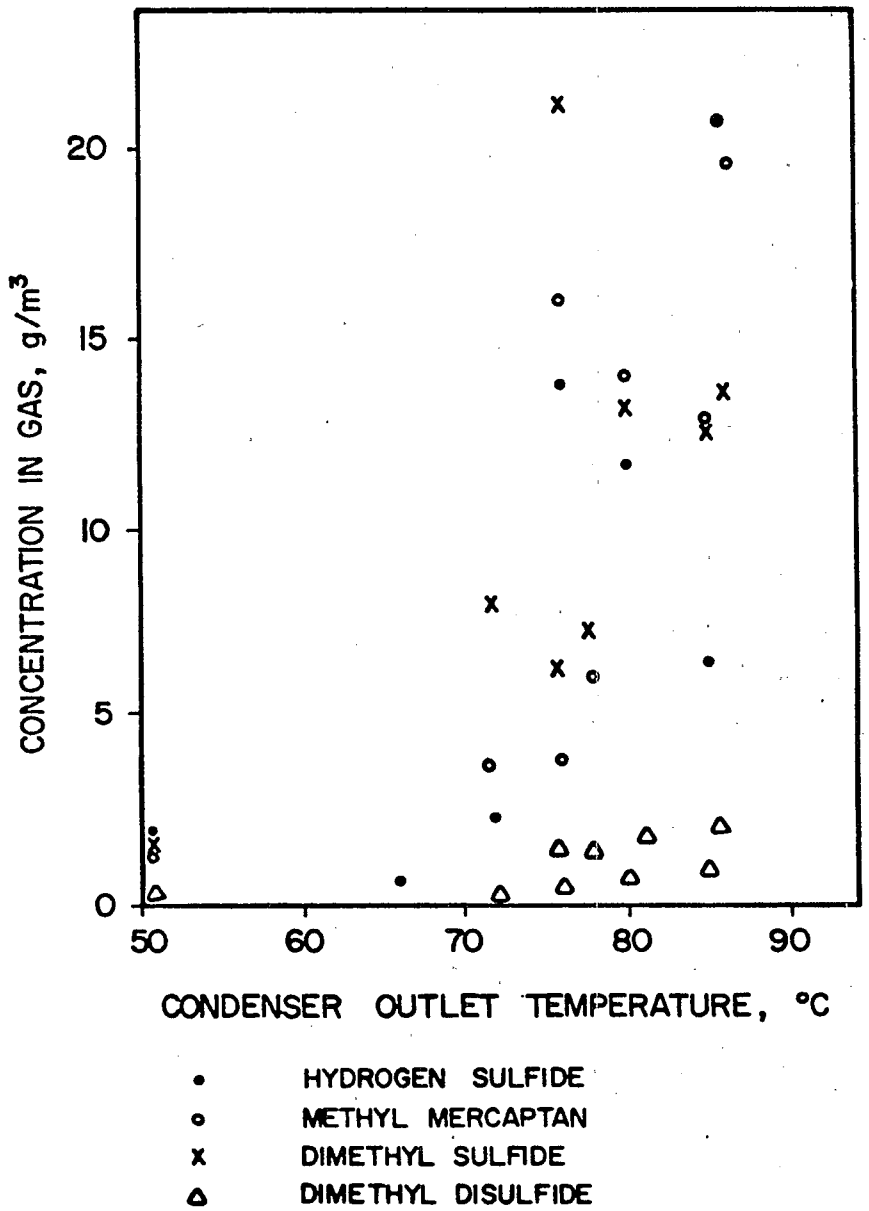

Figure 3-24. Odor compounds in relief gas after turpentine condenser as a function of condenser outlet temperature.[12,17]

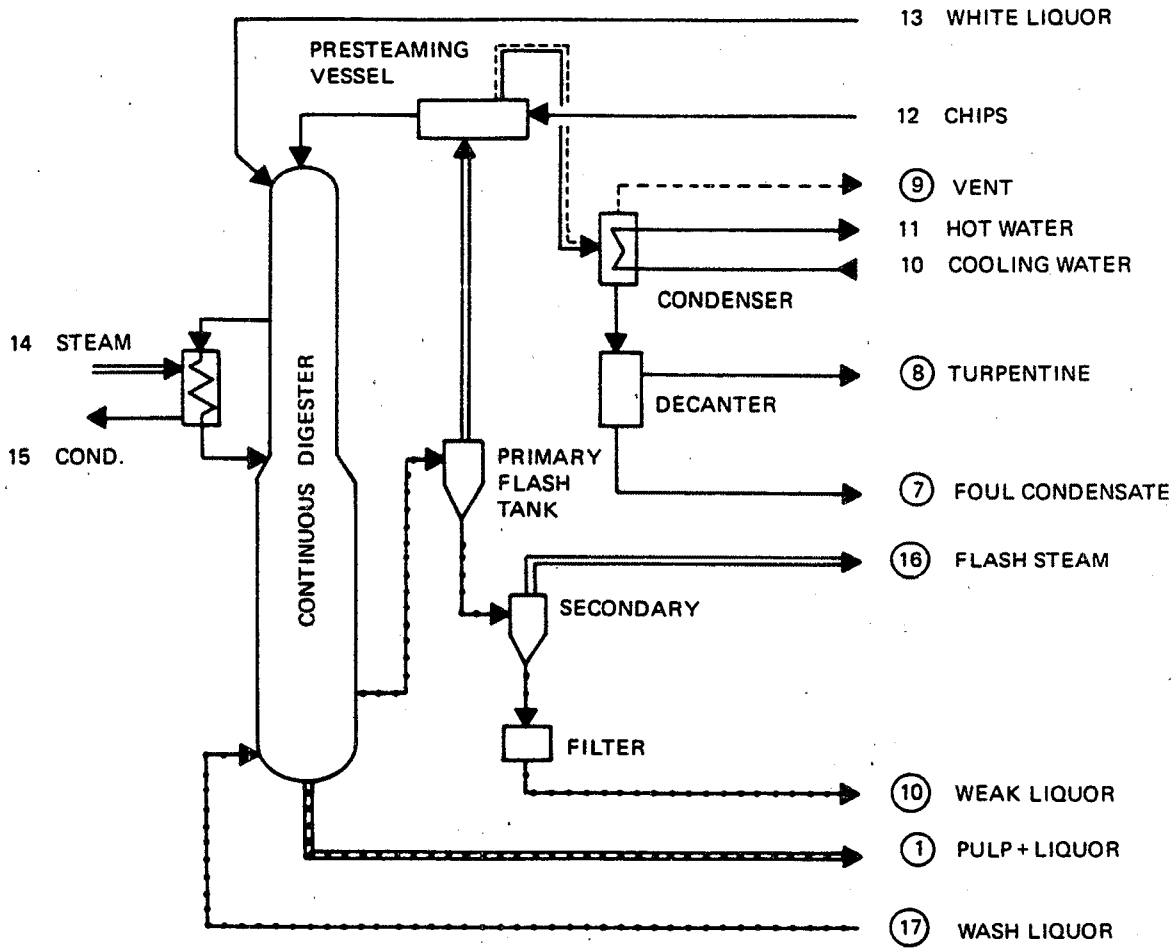

POINTS OF POSSIBLE ODOR RELEASE ARE ENCIRCLED

Figure 3-25. Continuous digester flow sheet.[12]

chemicals are displaced in the pulp by fresh water. The washing is accomplished in stages, with waste liquor being transferred countercurrent to the pulp flow. The washing usually takes place on rotary drum filters, and air is used to maintain a pressure differential over the washed pulp sheets.

The hot black liquor is exposed to large quantities of air and generates large volumes of steam. The exposure of the liquor to ambient air has two effects: 1) the reduced sulfur in the black liquor is partially oxidized, and 2) a portion of the TRS compounds is flashed through the washer vents.

Three types of pulp washers are commonly used: vacuum washers, pressure washers, and diffusion washers. In the vacuum washer, the most common (Figure 3-26),[12] the washer system has three sections: a drum, liquor tanks, and a foam tank. The foam tank and drum, which are vented to the atmosphere, are sources of TRS emissions. The drums are typically hooded in groups and vented directly through the mill building roof. The volume of gases exhausted from the drum hood is substantial (48,000 to 190,000 acfm/TADP) and the concentration of TRS gases is low (25 to 30 ppm).[12]

The pressure washer is similar to the vacuum washer, except that the drums are enclosed with recirculating pressure blowers (Figure 3-27). The quantity of air vented from the drum is smaller (less ambient air exhausted from the building), but the TRS levels in the gases are higher. Because the gas volume is smaller, TRS emissions from pressure washers can generally be controlled by incineration.

Diffusion washing usually is accomplished in a closed reactor (Figure 3-28) without air, which reduces liquor oxidation and odor emissions. The washers may be batch or continuous.

Black liquor recovered from the washers is generally between 10 and 15 percent solids by weight and is only partially oxidized. The liquor also contains recoverable amounts of tall oil soap, waxes, and fatty acids.

The washer lines contain multiple stages that have specific design pulp process weights and liquor flow rates. Operation at excessive pulp rates can result in incomplete chemical removal from the pulp and/or reduced chemical recovery through the washing liquor.

3.2.1.6 Black Liquor Concentration (Evaporation)--

The most common method of concentrating the black liquor from the brown stock washers is indirect contact with steam. Most sources prefer a multiple-effect evaporator (MEE), which is generally composed of three to seven stages.

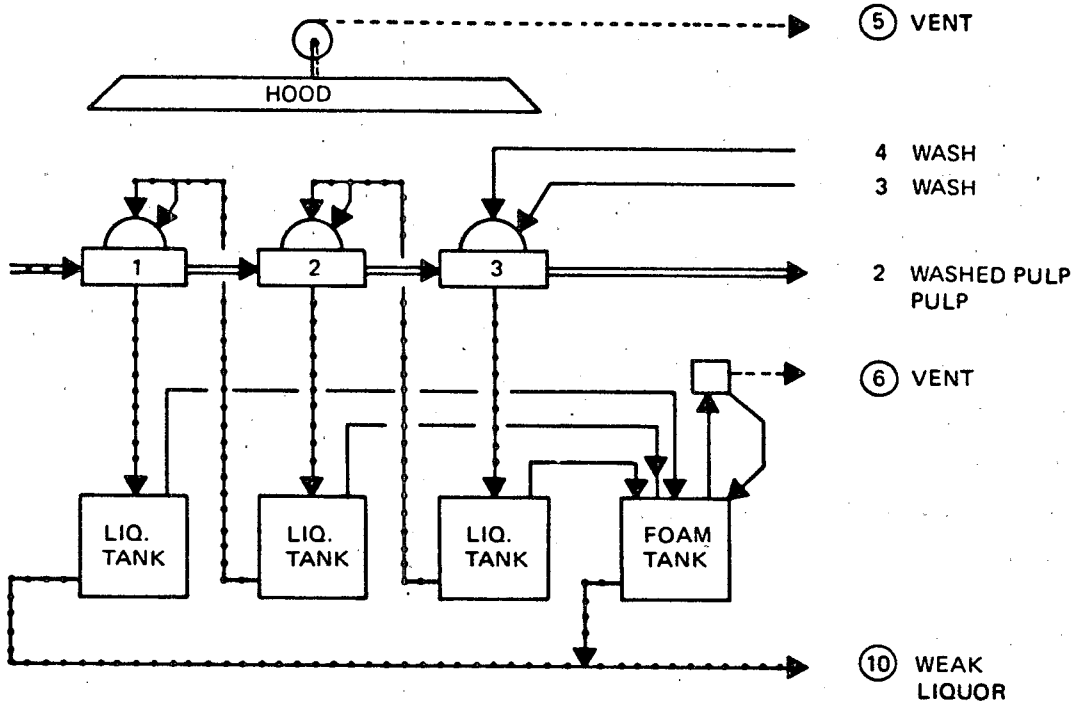

• POINTS OF POSSIBLE ODOR RELEASE ARE ENCIRCLED

Figure 3-26. Vaccum washer flow sheet.[12]

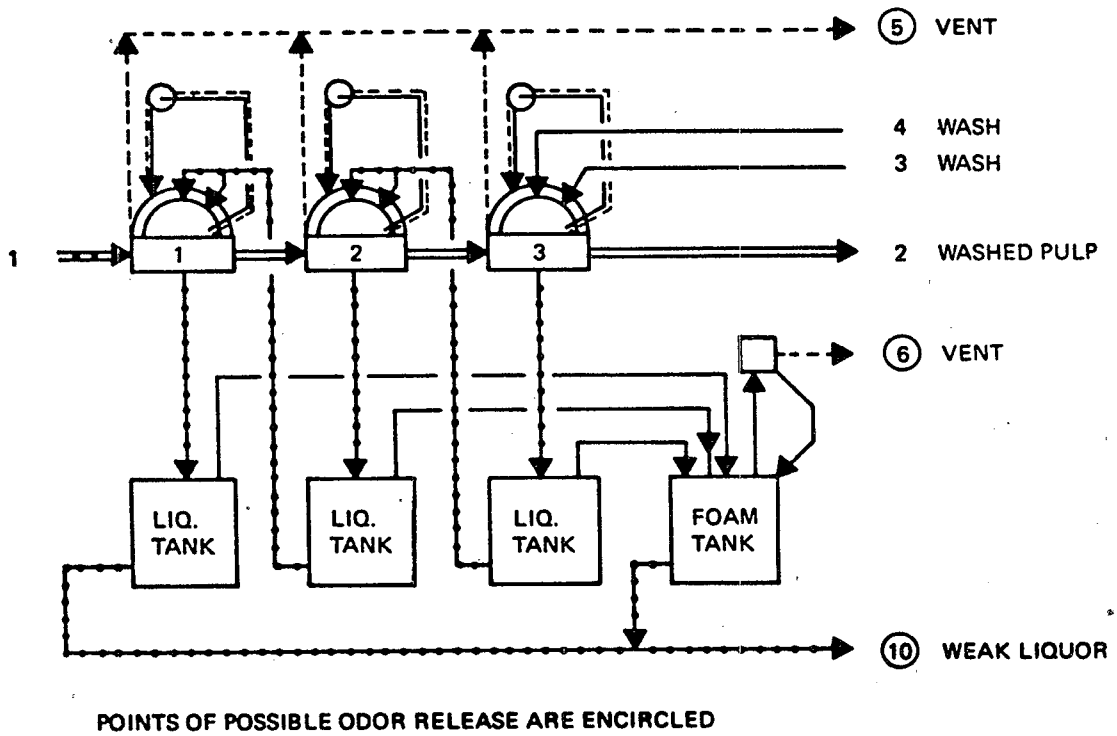

Figure 3-27. Pressure washers flow sheet.[12]

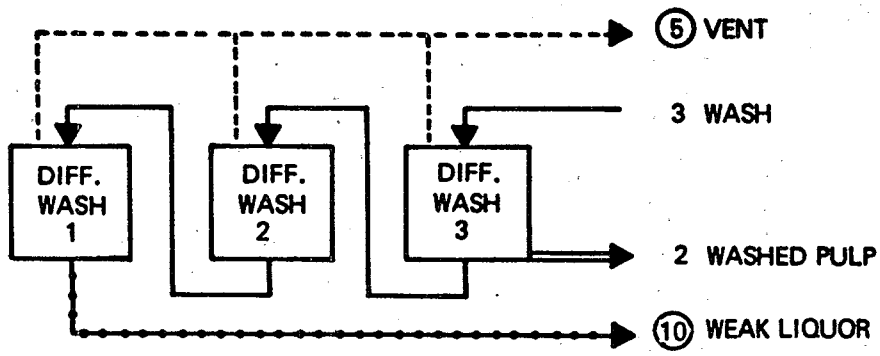

BATCH DIFFUSION WASHERS FLOW SHEET

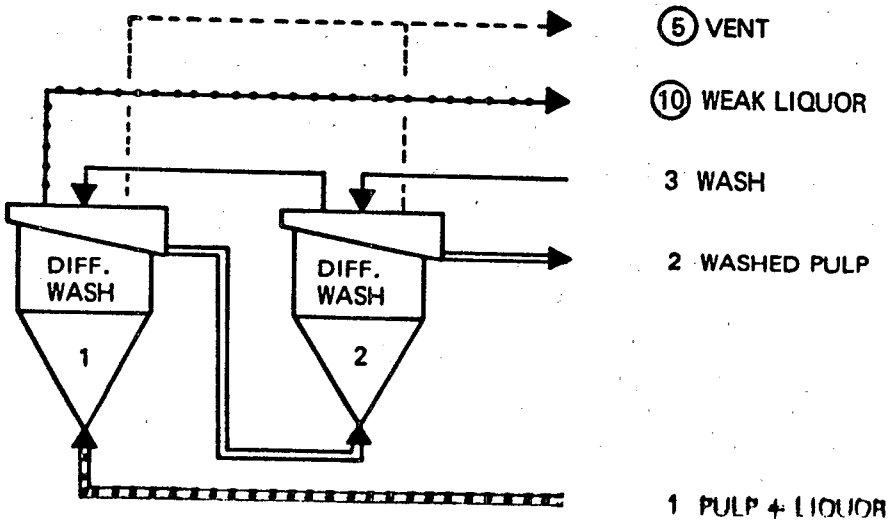

POINTS OF POSSIBLE ODOR RELEASE ARE ENCIRCLED.

CONTINUOUS DIFFUSION WASHERS FLOW SHEET

Figure 3-28. Diffusion washer flow sheet.[12]

Each line in the evaporator is normally equipped with condensate flashing, liquor preheating, hot water generating, degassing, tail steam condensing, and vacuum generating equipment (steam ejectors). Methods of liquor movement can be falling film, rising film, or forced circulation. The majority of the effects are a long-tube vertical and a shell design. As Figure 3-29 shows, the most concentrated liquor is heated by high-pressure steam.[1] The resulting steam is then used to heat the liquor in the next effect. Each effect operates at successively lower pressure, thus lowering the boiling point of the liquor.

Evaporated water vapor from the last effect is condensed in either barometric condensers (direct contact) or tube and shell noncontact (Figure 3-30) condensers with steam ejectors.[12] The vapor removal rate of the condensers must be high enough to maintain a vacuum above the vapor space in the last effect. Noncondensable gases are vented from the tail gas condenser with a small steam ejector.

Storage tanks are used between the middle effects (liquor solids 28 to 30%) to allow decanting and skimming of tall oil soap from the concentrated liquors.[18] The size (volume/height) of the soap skim tanks is defined by the vertical velocity of soap micelles in the liquor. The vertical velocity is affected by liquor pH, temperature, and micelle size.[18,19]

The storage tanks and condensate hot wells, which are generally vented to the atmosphere, are a source of TRS emissions. Noncondensable gases generated in each effect must be vented to maintain heat transfer coefficients and to prevent corrosion of the shell.[2] The venting may be accomplished by either single- or two-stage systems. Single-stage venting consists of the direct venting of each effect to a central manifold. The gases are typically vented to the secondary condenser, and noncondenables are released through the hot well or steam jet ejector.[12]

In two-stage venting the first two stages after the liquor feed stage are vented. The noncondensable gases (5 to 15% of the total vapor flow) are vented to separate condensers that are then vented to the main vacuum system.

Black liquor generally enters the MEE line at 12 to 15 percent solids and leaves the last effect at 48 to 55 percent solids. Flow rate (gallons/minute) and liquor weight through the effects are measured in total liquor flow in and out of the line plus liquor percent solids in and out of the line.

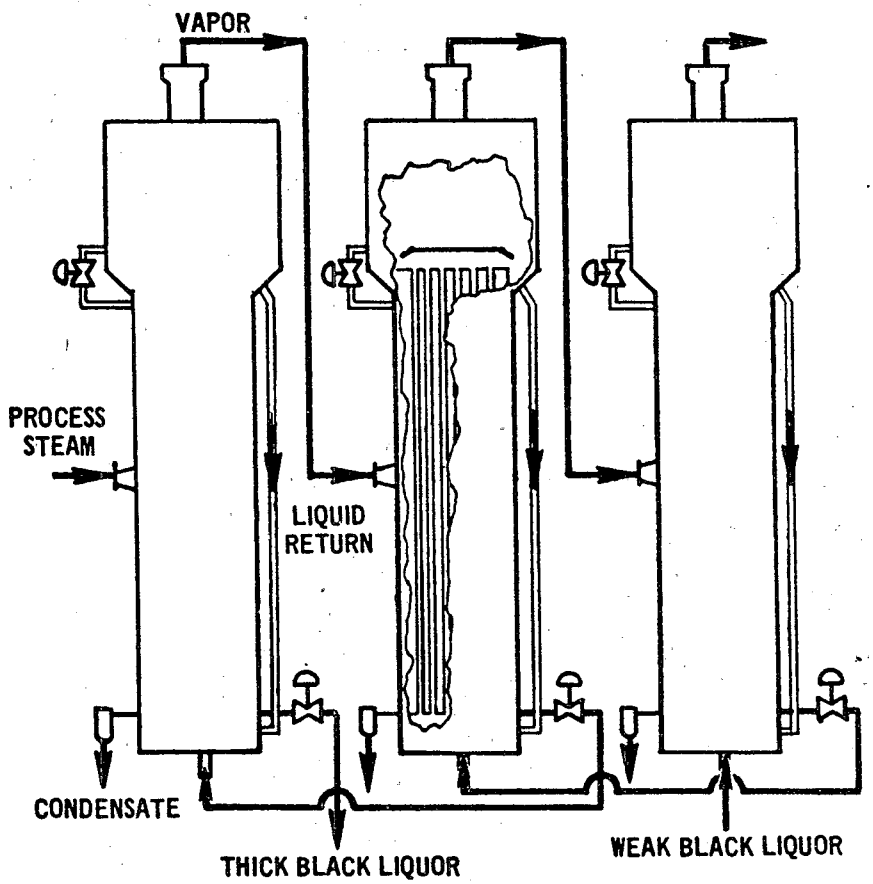

Figure 3-29. Multiple-effect, long-tube vertical evaporators (backward feed).[1]

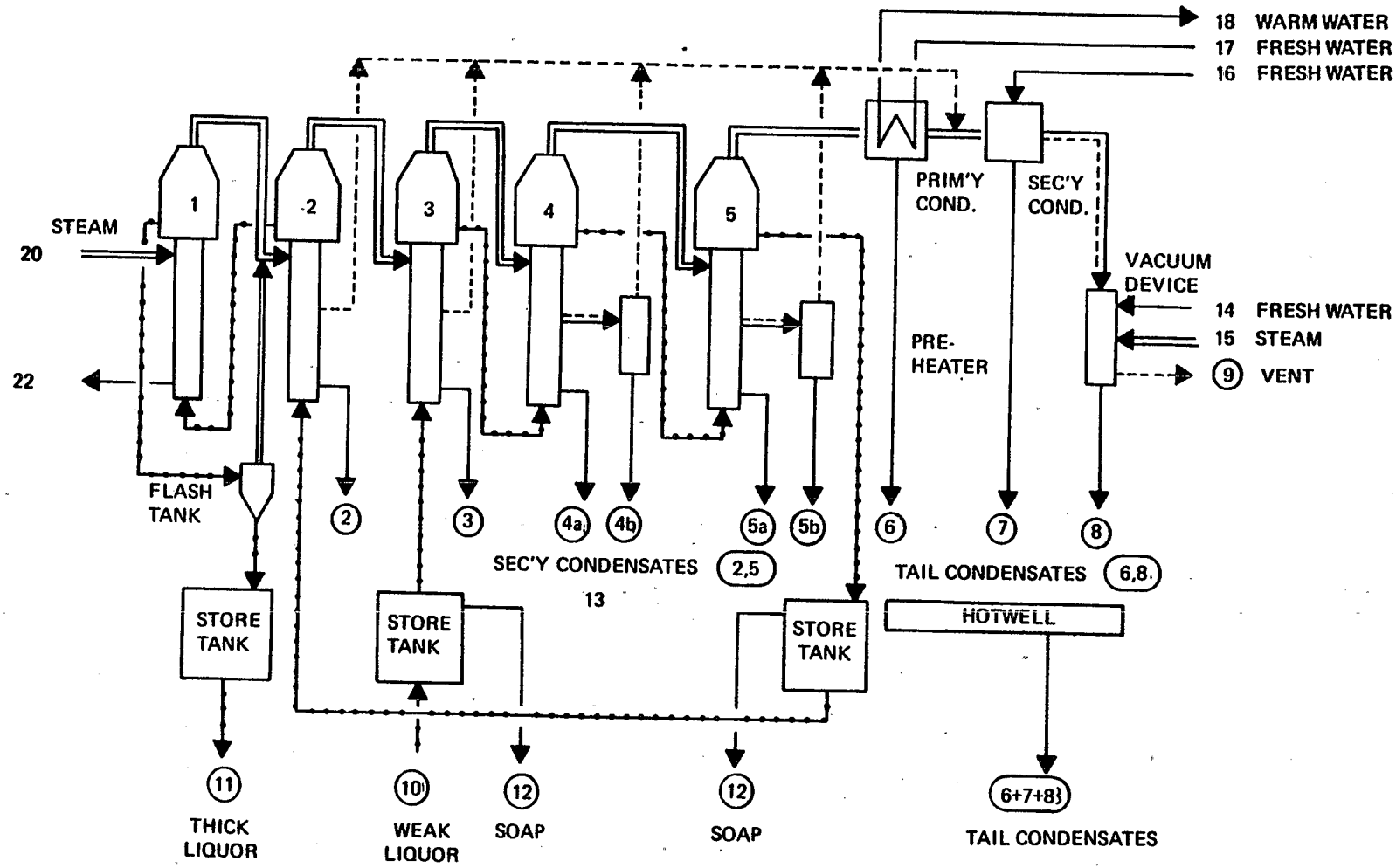

POINTS OF POSSIBLE ODOR RELEASE ARE ENCIRCLED.

Figure 3-30. Multi-effect vacuum evaporation plant flow sheet.[12]

Normally, the steam flow to the effect is also measured. Figure 3-31 shows a typical temperature chart for liquor steam system.[2]

The amount of noncondensable gases vented from the hot well and tail gas condenser may vary from mill to mill, depending on the tightness of the system and the amount of air inleakage into the system.[20,21] Published data indicate gas volumes between 10 and 400 ft^3/TADP for hot wells. A reasonable value for a southern softwood is on the order of 32 ft^3/TADP.[12]

3.2.1.7 Condensate Stripping--

Condensates from the digesters and evaporators contain odorous compounds that may be lost to the atmosphere during water treatment and storage. As a result, many new mills operate condensate treatment plants to lower water treatment biological oxygen demand (BOD) and reduce the potential loss to the atmosphere.

The organic compounds are divided into two classes, those that are wood oil bases containing no sulfur and those that are of the TRS type. The latter class generally has a very low odor threshold and is maladorous. Table 3-3 lists the main components of general mill condensate.[22,23,24]

The composition and amounts of condensates are a function of process operation, pulp yield, cooking chemicals, cooking time, and dilution. Table 3-4 presents species concentration data obtained from 10 mills.[23]

There are several ways to control condensate odor problems: reduction in quantity, segregation of clean condensate, weak liquor oxidation, chlorination, and air or steam stripping. Figure 3-32 shows a typical air stripping condensate plant flow sheet.[12] The condensates are acidified and passed through a separation column. Overall TRS removal efficiency can be as high as 95 percent.[12]

Steam stripping is similar, but the column is steam-heated and equipped with primary and secondary noncontact condensers (Figure 3-33). The column is generally a bubble-cap type containing 10 to 20 trays.[12,25]

Removal efficiency is a function of the steam-to-condensate ratio (Figure 3-34). The pH of the condensate feed also influences H_2S removal rates.[26,27] Noncondensable gases are vented from the condensers and usually incinerated in the lime kiln or power boiler.[28]

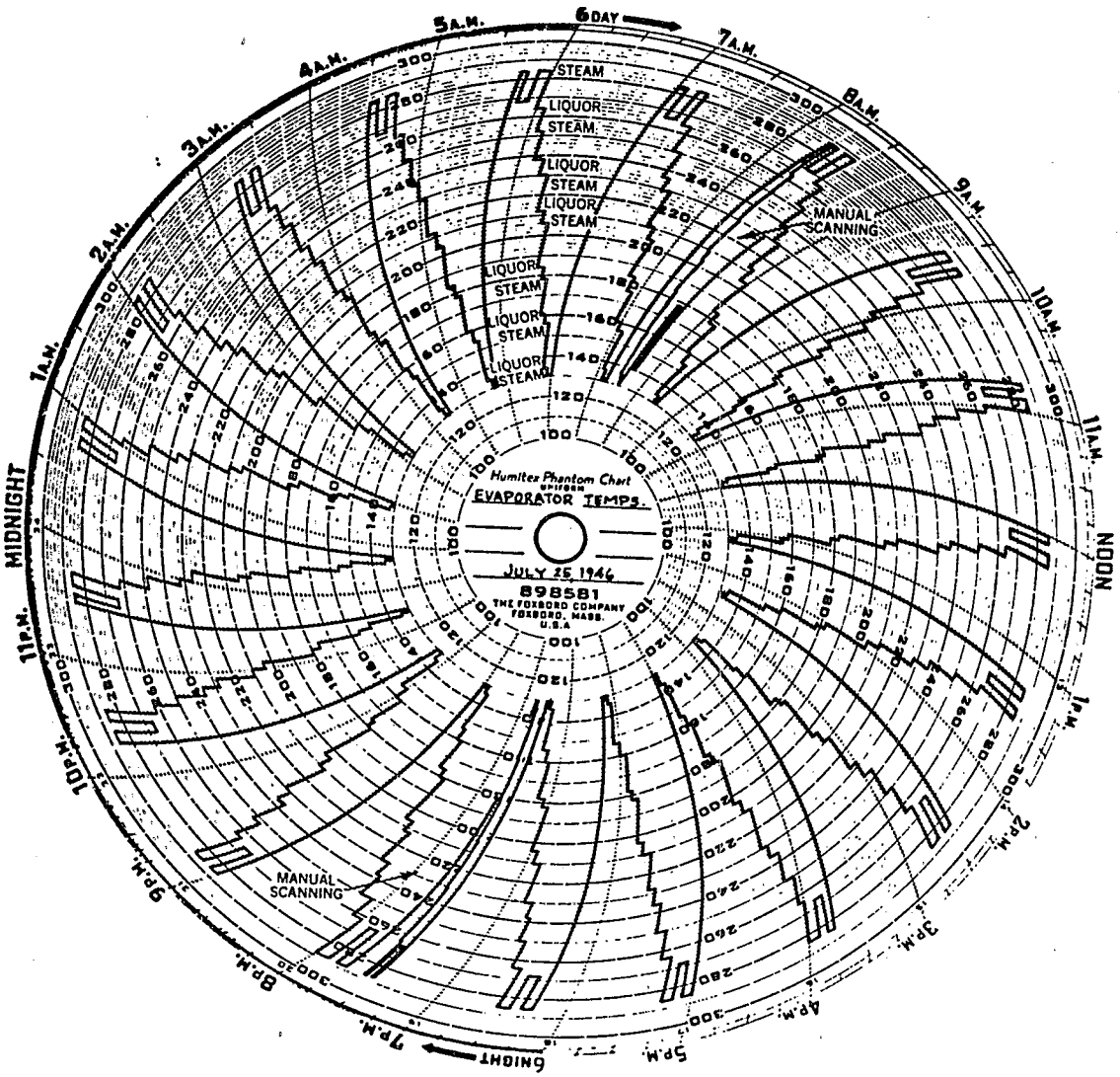

Figure 3-31. Chart of evaporator temperatures.

Source: Joint Textbook Committee of the Paper Industry, the Pulping of Wood, 1969. Reproduced with permission of McGraw-Hill.

TABLE 3-3. MAIN COMPONENTS OF TYPICAL KRAFT MILL CONDENSATES[22,23,24]

No.	Component	Boiling point, °C	(°F)	BOD, kg/kg	Sulfur, %	Odor threshold, ppb
1	CH_3OH	64.7	(148.5)	1.00	0	100,000
2	CH_3CH_2OH	78.5	(173.3)	1.23	0	10,000
3	CH_2COCH_3	56.5	(133.7)	0.67	0	100,000
4	Turpentine (Pinene)	154	(309)	-	0	-
5	H_2S	-59.6	(-75)	0.60	94	0.4-5
6	CH_3SH	7.6	(45.7)	0.07	67	0.4-3
7	CH_3SCH_3	37.5	(99.5)	0.31	52	1-10
8	CH_3SSCH_3	117	(243)	0.61	68	2-20

TABLE 3-4. TYPICAL KRAFT MILL CONDENSATE COMPOSITIONS, MEAN VALUES FOR 10 MILLS[23]

Condensate compound	Turpentine decanter, mg/liter	Means: Digester blow, mg/liter	Evaporator effects, mg/liter	Evaporator hotwell, mg/liter
H_2S	90	60	40	100
CH_3SH	250	80	10	40
CH_3SCH_3	400	70	5	7
CH_3SSCH_3	130	50	5	15
Total S	550	180	51	135
CH_3OH	6,500	4,300	10,000	1,000
CH_3CH_2OH	1,600	500	60	40
CH_3COCH_3	160	40	6	10
Total BOD	860	490	1,070	1,060

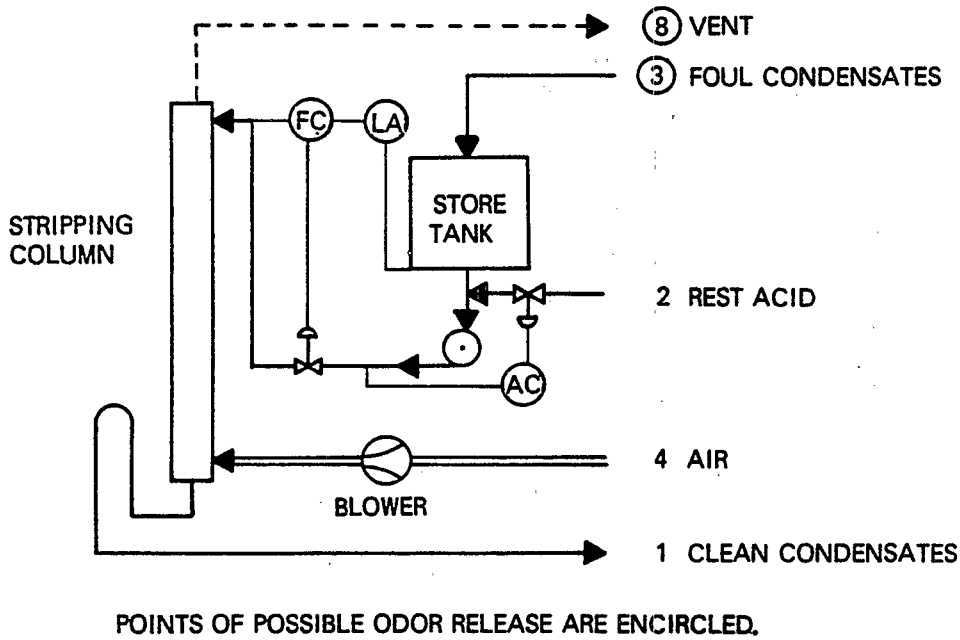

Figure 3-32. Contaminated condensates air stripping plant flow sheet.[12]

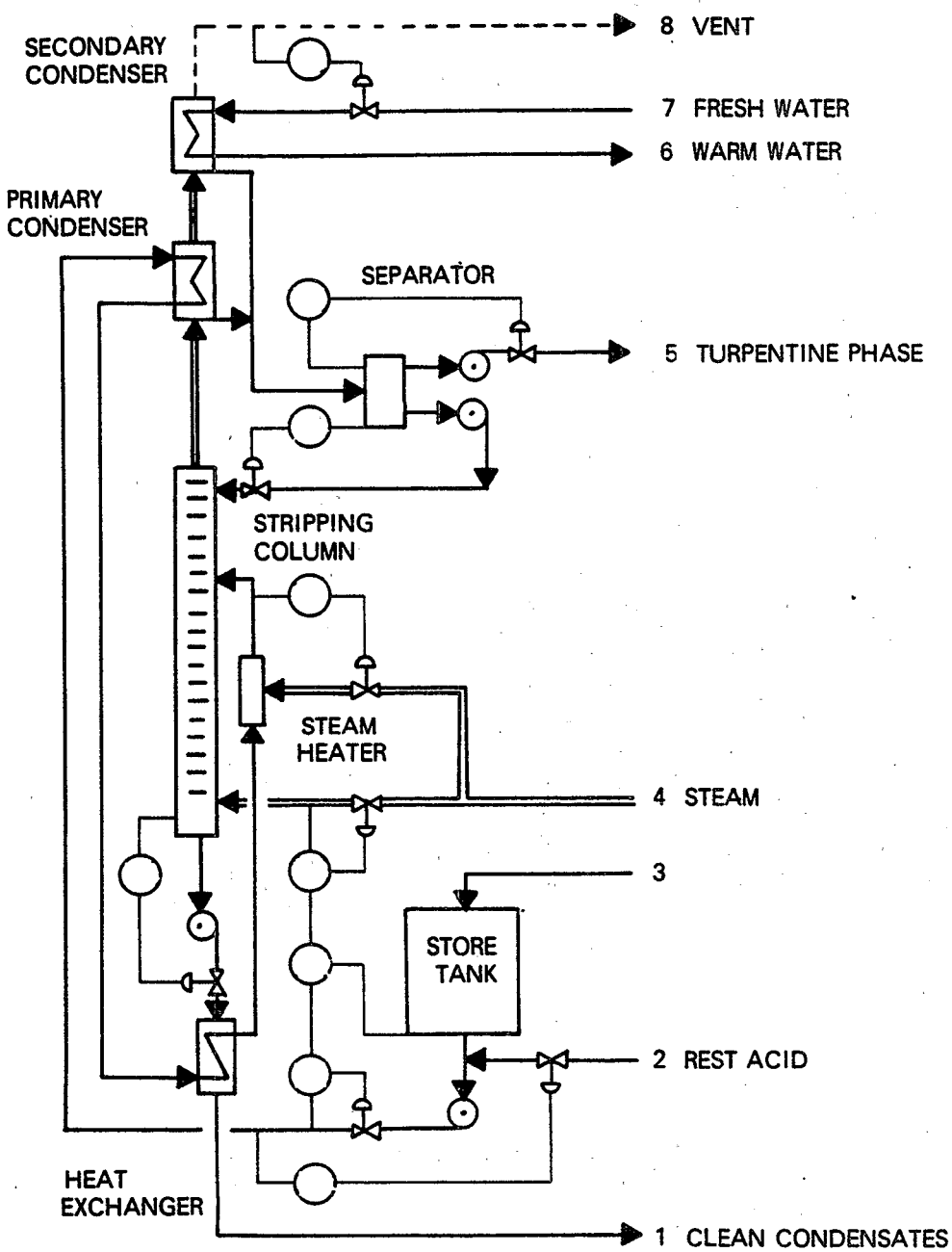

Figure 3-33. Contaminated condensates steam stripping plant flow sheet.[12]

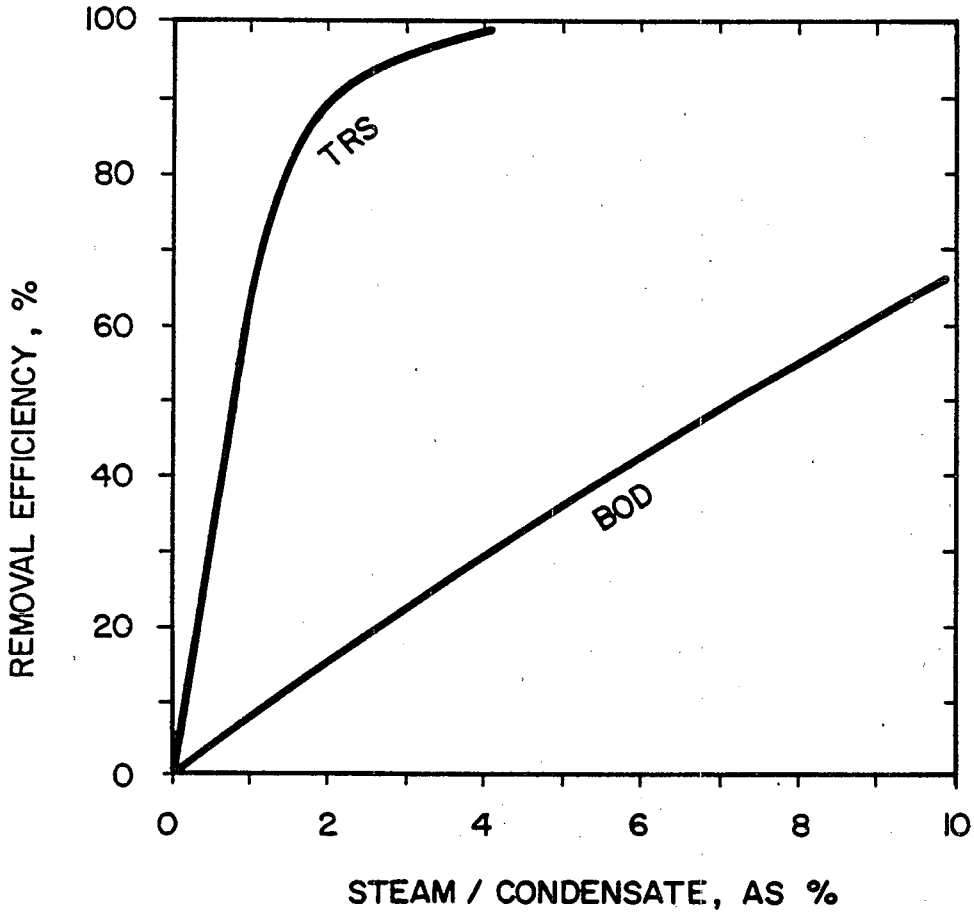

Figure 3-34. Stripping efficiency for different steam-condensate ratios at 10 theoretical plants.[12]

3.2.1.8 Black Liquor Oxidation--

If a contact evaporation is used in the chemical recovery process, the black liquor that is separated from the pulp during the washing cycle is normally oxidized with air to control the sulfide level and prevent the release of odorous compounds. As Figure 3-35 shows, the process consists of countercurrently passing the black liquor through an air stream by means of a porous diffuser,[29] sieve tray tower,[30] packed tower[31] or agitated air sparge.[32] The first two techniques are more efficient than the last two. If an inexpensive source of molecular oxygen is available, it can provide a very efficient means of oxidation. The oxidation reaction consists of converting sodium sulfide (Na_2S) to sodium thiosulfate ($Na_2S_2O_3$) according to the reaction: $2Na_2S + 2O_2 + H_2O \rightarrow Na_2S_2O_3 + 2NaOH$. The benefits derived from black liquor oxidation are that it increases the black liquor solids and therefore, improves the multiple-effect evaporation process, reduces odors, reduces the corrosion rate of metal evaporating surfaces, reduces the chemical makeup requirements for Na_2SO_4 and CaO, and increases the sulfidity of the white and green liquor, which affects pulp yield and quality. It may, however, reduce the heating value of the black liquor, and foaming may occur because of the presence of fatty acid sodium salts, particularly when using softwoods.[33] The use of molecular oxygen in place of air, however, has proved to be effective in controlling this problem. The oxidation may be carried out as weak liquor (prior to MEE) or as strong liquor after concentration. Figure 3-36 shows a typical strong liquor oxidation system.

The oxidation efficiency of the process is measured by the change in sulfide (Na_2S) of the black liquor in grams/liter. Conversion rates in excess of 99 percent are common.[35,36] Acceptable sulfidity levels in the liquor are on the order of 0.1 g/l to achieve TRS emission limits from the recovery boiler. The efficiency is a function of residence time, liquor mixing, liquor height, air flow rate, and inlet Na_2S concentration. The oxygen requirement for conversion is generally measured in cubic feet of O_2/ton of Na_2S, pounds of O_2/ton of pulp, or cubic feet of O_2/gal of black liquor.

Emissions of TRS generally come from the tank vent and are on the order of 10 to 500 ppm. The gas volume is between 16,000 and 48,000 ft^3/TADP.[12]

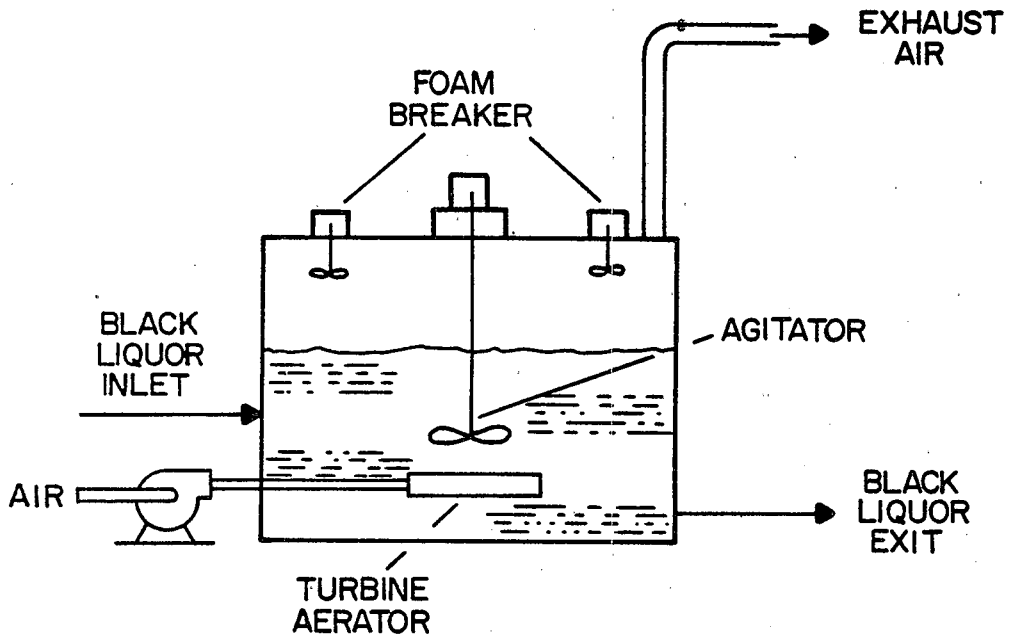

Figure 3-35. Agitated air sparging system for black liquor oxidation.[12]

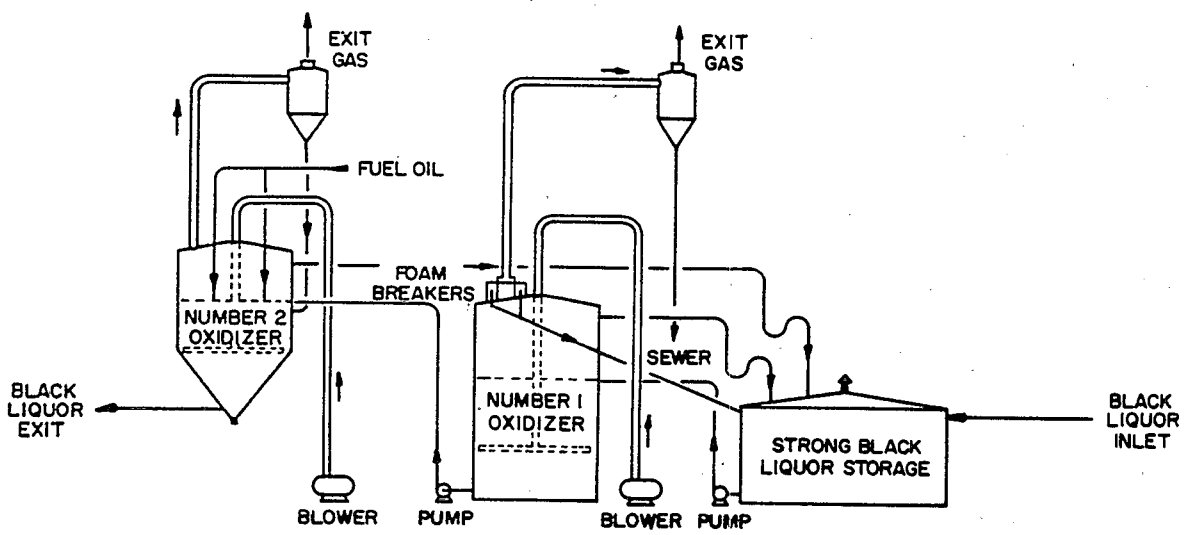

Figure 3-36. Champion two stage unagitated strong black liquor oxidation system.[34]

3.2.2 Sources of Emissions and Control

Emissions from the pulping department consist primarily of odorous gases. These gases are generally controlled by one of three methods: 1) reduction in quantity through process operation, 2) scrubbing with fresh water or alkaline solutions, or 3) incineration of noncondensable gases. Table 3-5 summarizes the control options that are available for each of the emission sources within the pulping department.

TABLE 3-5. SUMMARY OF TRS CONTROL OPTIONS FOR PULPING DEPARTMENT[12]

Emission source	Control option
Digester gases (blow and relief)	Incineration
Washer vents	Incineration[a]
Evaporator gases	Scrubbing Incineration
Condensate stripping	Incineration
Condensate water	Steam stripping Air stripping
Black liquor oxidation (tower vent)	Incineration
Tall oil reactor vent	Scrubbing

[a]Diffusion and pressure washers.

3.2.2.1 Digester and Blow Tanks--

Digester and blow tank noncondensable gases are generally low in volumetric flow rates, but high in such TRS compounds as methyl mercaptan, dimethyl sulfide, and dimethyl disulfide. The emissions from the digester and blow tanks can range from 0.5 to 5.0 lb of sulfur per ton of pulp (10 to 1000,000 ppm volume).

Gases from the relief system pass through the turpentine recovery condenser and decanting system, and the flow is relatively constant at low volumetric flow rates. When batch digesters are used, the emissions from the blow tank are periodic and can occur up to 120 times per day (depending on number of digesters and the cooking time). The time during which peak flow occurs,

however, is only 10 to 20 minutes per digester cycle.[13] The volume of gas released depends on the digester volume, the gas temperature, the moisture content, the condition of hot water accumulator condensers, and the amount of air and inert gases in the system.

The amount of gas generated also may be affected by upsets in the system. The normal practice is to blow only one digester at a time. If an upset occurs, a simultaneous blow of two digesters will generally overload the primary and secondary condensers and result in an increase in noncondensable gas treatment volume. Table 3-6 presents typical volumes during average, maximum, and upset conditions.[13]

TABLE 3-6. GAS FLOW RATES FROM BATCH DIGESTER[13]

Condition	Digester blow	
	ft^3/blow	ft^3/TADP
Average	1,600	128
Maximum	4,000	320
Upset	125,000	10,250

The amount of flow also varies between digester types, with the continuous digester generating the lowest emissions. Table 3-7 presents comparative data for both batch relief and continuous digester systems.[12]

TABLE 3-7. TYPICAL RANGES OF DIGESTER NONCONDENSABLE GAS FLOW RATES[12]

Source	Flow rate ft^3/TADP
Batch blow	15,200 - 203,500
Batch relief	10 - 3,040
Continuous	20 - 200

Because of the nature of the digester TRS emissions, scrubbing is not an effective control option. Scrubbing is effective in removing acidic TRS species, but it is not effective in removing other TRS species. For effective

destruction of all the gases, the noncondensable stream usually is incinerated in either a lime kiln or a wood-waste-fired boiler.

Because of the range of flow rates expected from the batch digester blow, it is not economically feasible to design for peak flow conditions. In most systems a gas accumulator is used to collect the blow gases and retain them to provide uniform flow to the incinerator.[37]

The most common type of flow equalization system is the vaporsphere (Figure 3-37). The sphere contains a diaphragm and flow control system for venting collected gases to the incinerator. Vaporspheres are typically 10,000 ft^3.[17,37]

A second type of gas holder is a floating-cover system in which a water seal is used (Figure 3-38).[17] Either system must be maintained to keep the gas concentration below or above the flammability limits. Table 3-8 presents the acceptable flammability limits.[38] Duct design and flash back systems are used to prevent explosions. Table 3-9 provides typical flame-spreading velocities.[39]

3.2.2.2 Washer Hood Vents--

Existing hood vents over vacuum washers are not generally controlled because of the low concentrations of the TRS in the gas stream, the large gas volume, and the high amounts of water vapor. TRS control is required of new washers under NSPS. The limit is 5 ppm by volume corrected to actual oxygen content of the gas stream. Emissions from pressure-type washers and diffusion washers may be condensed to remove water and noncondensable gases and then vented to the lime kiln or wood-waste-fired boiler to be incinerated. Because the volumeric flow rate of the gas stream is constant, the use of a gas equalization system is not required.

3.2.2.3 Evaporator Condenser--

Gases from multiple-effect evaporators (tail gas and hot well) are generally condensed to remove water and condensable organics. The remaining gas may be scrubbed or incinerated in the lime kiln. The volume of gas requiring treatment varies greatly and depends on evaporator design, condenser design, condenser temperature, and the amount of infiltrated air. Table 3-10 presents a range of gas volumes for the two types of condensers.[12]

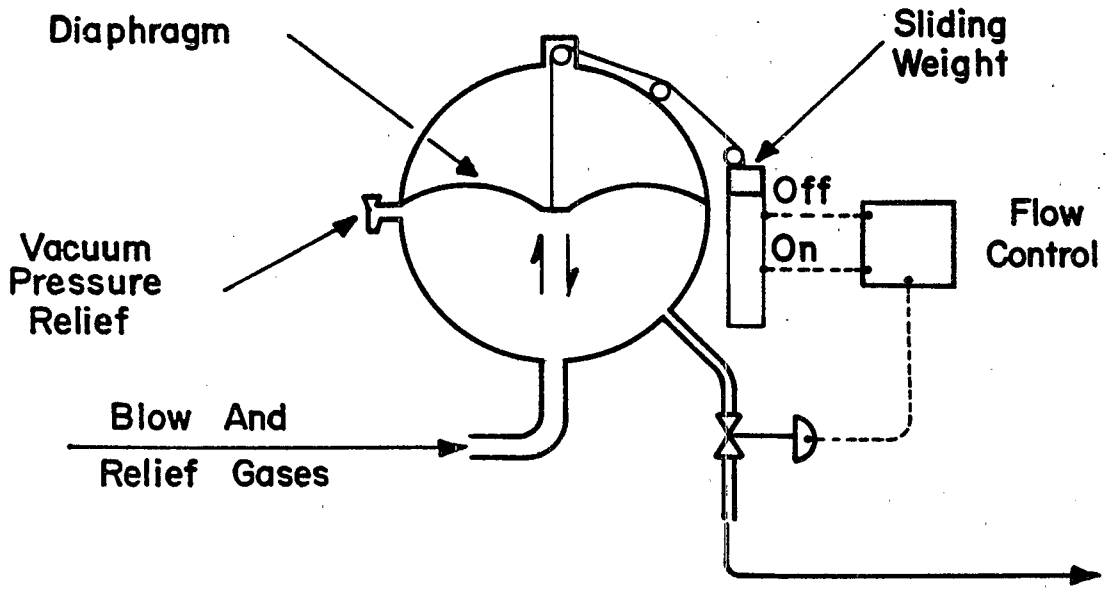

Figure 3-37. Vaporsphere flow equalization gas holders.[17,37]

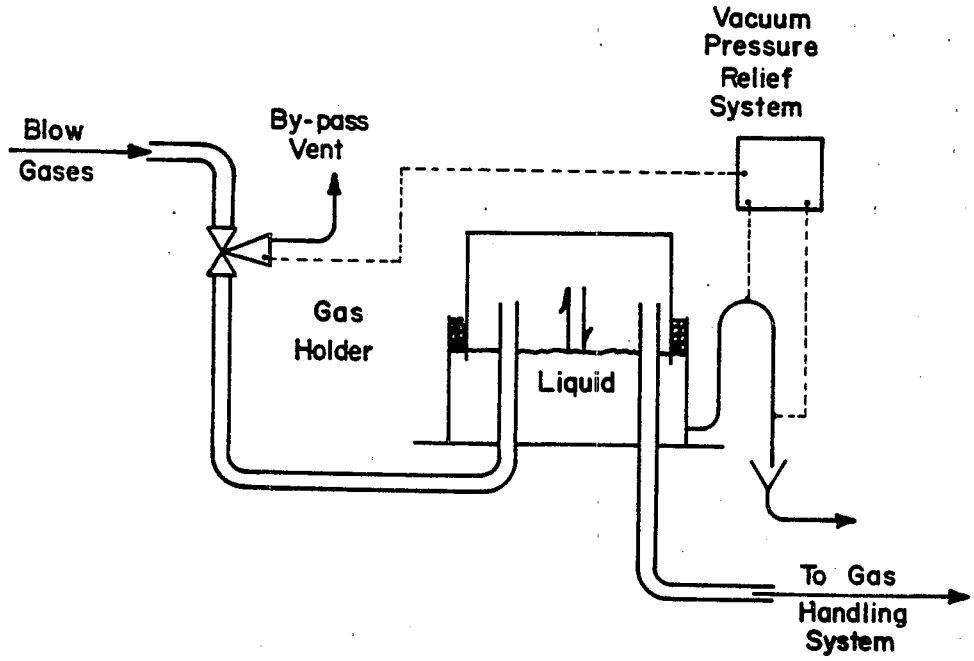

Figure 3-38. Floating cover flow equalization gas holders.[17,37]

TABLE 3-8. FLAMMABILITY LIMITS IN AIR FOR KRAFT NONCONDENSABLE GASES[38]

	Concentration, % by volume	
	Lower	Upper
H_2S	4.3	45.0
CH_3SH	3.9	21.8
CH_3SCH_3	2.2	19.7
Terpene	0.8	--

TABLE 3-9. FLAME-SPREADING VELOCITIES OF AIR-MERCAPTAN MIXTURES[39]

Mercaptan % by vol.	Flame velocity, ft/s
18.9	1.8
22.8	1.5
23.1	1.3
23.7	1.2
25.5	0.6
25.7	0.5

TABLE 3-10. TYPICAL RANGES OF EVAPORATOR NONCONDENSABLE GAS FLOW RATES[12]

Source	Flow rate, ft^3/TADP
Surface condenser	20 to 420
Jet condenser	10 to 100

The primary sulfur compounds that are emitted from the MEE are H_2S and CH_3SH. The concentrations range from 0.2 to 3.0 lb sulfur per ton of pulp (300 to 25,000 ppm volume). The alkaline scrubber is effective in reducing TRS compounds that are acidic (H_2S and CH_3SH), but it is not effective in removing CH_3SCH_3 and CH_3SSCH_3.[17]

3.2.2.4 Condensate Stripping--

Noncondensable gases from the air stripping column or steam stripping column, which are generally low in volume, are incinerated in the lime kiln or wood-waste-fired boilers.

3.2.2.5 Black Liquor Oxidation--

The gas stream from the oxidation tower vent generally contains a low concentration of TRS and is saturated with water vapor. This gas stream is generally not controlled. If control is necessary, however, a primary condenser is usually used to remove the water vapor. The gas stream volume is generally too large to be incinerated in lime kilns, but it can be vented to and incinerated in a wood-waste-fired boiler.

3.2.2.6 TRS Scrubbers--

Scrubbing a noncondensable gas stream to remove TRS compounds is generally accomplished with packed-bed scrubbers using a countercurrent flow of an alkaline liquid (white water). The packing medium can be gravel, stone, or packing rings.[17] The scrubbers can be constructed of mild steel or stainless steel (304 or 316L). The stainless steels are used where corrosion is expected.

Figure 3-39 shows a typical two stage packed bed scrubber that is applicable to noncondensable gases from multiple-effect evaporators. General liquor-to-gas ratios are on the order of 300 gal/1000 acfm of noncondensable gas. The superficial gas velocity is approximately 50 ft/min through the packed section. A mist eliminator is generally used to remove mist carryover.[40]

3.2.2.7 Incineration Systems--

A noncondensable gas incineration system may consist of a flow equalization system, condenser scrubber, rupture discs, fan, flow recorder, condensate traps, bypass vent system, flame arrestors, and the incinerator.[17] The incinerator may be the lime kiln, separate incinerator, or wood-waste-fired boiler (Figure 3-40).

3.2.2.8 Lime Kiln Incineration--

The noncondensable gases are introduced either into a dedicated burner or into the primary air system of the kiln burner for effective mixing with air to ensure complete combustion. Systems using a dedicated burner are generally

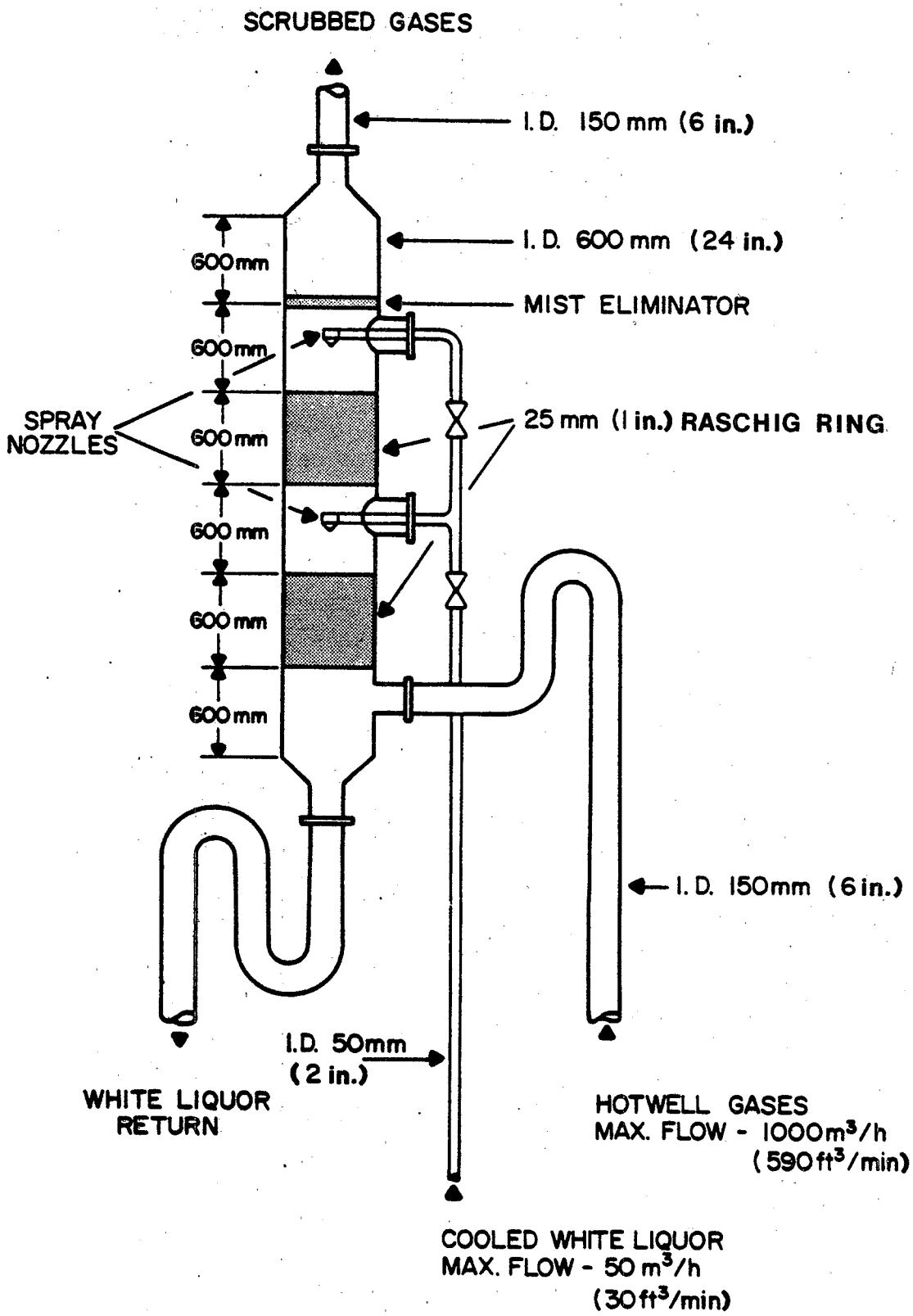

Figure 3-39. Hotwell gas scrubber for 100 metric tons per hour 9400 gpm) evaporation plant for H_2S-Separation of 95 percent or more.[40]

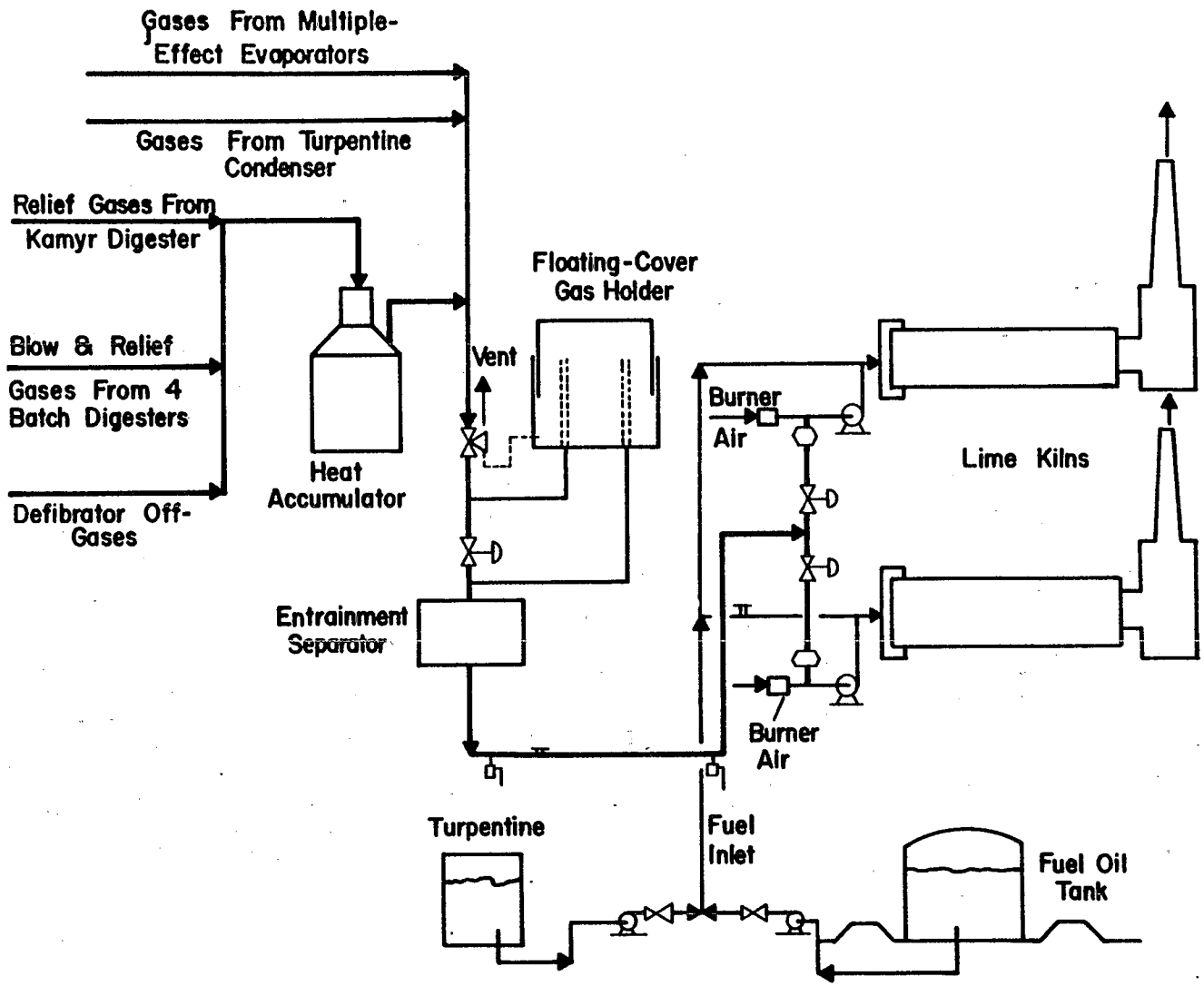

Figure 3-40. Noncondensable gas incineration system.[17]

used on a lean gas collection system. Rich gas streams are generally incinerated in the kiln. The dilution factor of the gases entering the kiln is about 50 to 1, and the gas velocity is at least 30 ft/s.[12,41]

The gases are incinerated in the lime kiln at temperatures between 2200° and 2550°F. Residence times are generally greater than 0.5 s above 1000°F and may exceed 1.5 s in longer kilns. The SO_2 generated from the combustion is adsorbed by the lime to form calcium sulfite (Ca_2 SO_3).

3.2.3 Malfunctions

The following subsections discuss process and control equipment malfunctions that have an impact on uncontrolled and controlled emission rates.

3.2.3.1 Digester Relief Systems--

Most of the operating problems that occur with digester relief systems have an impact on pulp quality, but some also have an impact on atmospheric emissions. Entrainment of air into the digester system as a result of improper charging can produce higher than normal noncondensable gas volumes. In some mills excessive liquor carryover and foaming can cause plugging of the system and fouling of the turpentine condenser.[2] Foaming can occur as a result of resins in softwoods and entrained air. Table 3-11 summarizes the malfunctions that can occur in the digester relief system.

3.2.3.2 Digester Blow System--

The primary malfunction that occurs in digester blow systems is the fouling of the hot water accumulator condensors or pluggage of the blow tank.[2,42] As the pluggage progresses the ability of the condenser to condense the flashed steam is reduced. This results in increased noncondensable gas volumes and overloading of the vent control system and gas accumulator. Serious malfunction of the condenser may cause vent gas system to be bypassed as a result of too much pressure. Figure 3-41 shows the effect of heat exchanger malfunctions on digester noncondensable gas volumes.[17,42]

Simultaneous blowing of two or more digesters can produce high noncondensable gas volumes and reduce the condenser's efficiency. Because of this increased volume, the vent system may be bypassed to the atmosphere.

If the condensers become seriously fouled, the back pressure in the digester blow system can cause fugitive emissions through duct flanges, access hatches,

TABLE 3-11. MALFUNCTIONS THAT MAY OCCUR IN DIGESTER RELIEF TURPENTINE RECOVERY SYSTEMS[2,42]

Malfunction	Primary effect	Result
Liquor carryover	Digester relief line plugging Trapped air in chips due to poor digester filling Liquor foaming when cooking resinous woods	Digester overpressure and emergency bypass relief or premature digester blow which will increase TRS emissions
	Temperature condenser plugging or fouling	Reduced condenser heat transfer and increased noncondensable gas temperature yielding increased equilibrium TRS vapor pressure and TRS emissions
Low water flow rate to turpentine condenser	Increased condenser water temperature	Increased equilibrium TRS vapor pressure and TRS emissions
Failure to close digester valve after blow	Fouling of digester blow line	Loss of digester cooking liquor, overpressure during blowing, increased digester blow volume which will increase TRS emissions

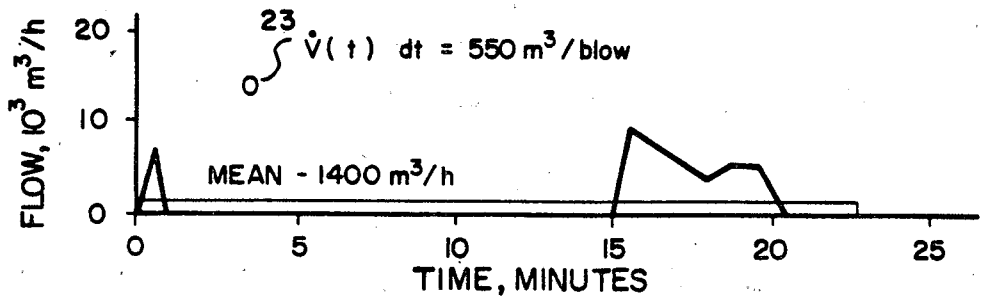

CASE 1. NORMAL OPERATIONS

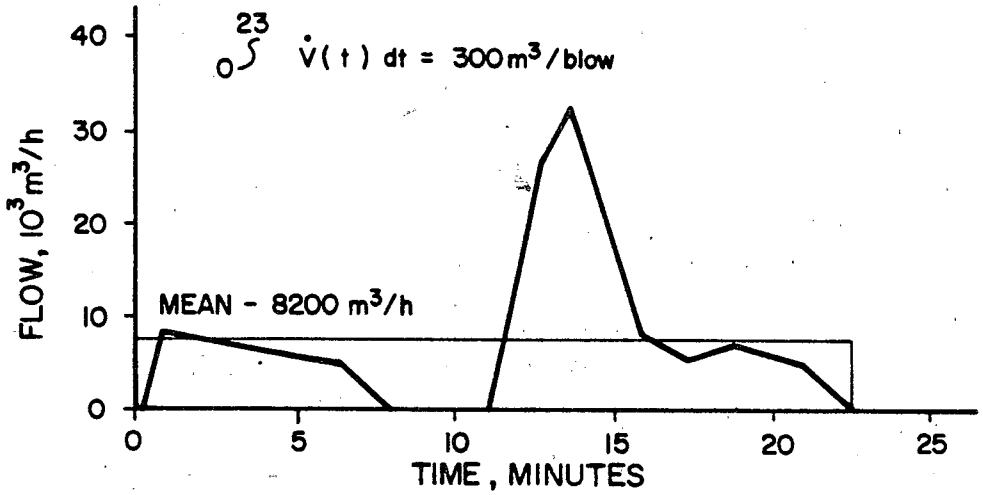

CASE 2. MALFUNCTION OF BLOW HEAT RECOVERY HEAT EXCHANGERS

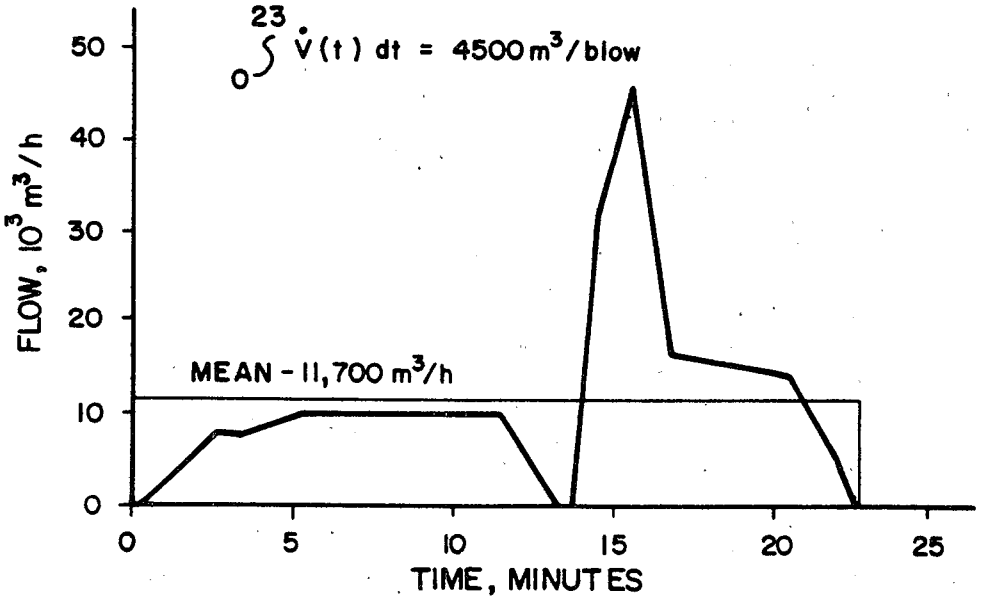

CASE 3. INCREASING MALFUNCTION OF HEAT EXCHANGERS

Figure 3-41. Kraft batch digester blow gas flow after condensing and without equalization.[17]

etc. Bypass of the primary condenser has been observed as a result of severe corrosion of the blow tank and associated ductwork. It should be noted that the concentration of TRS in these streams is very high, and the inspector should wear appropriate respirators in these areas when fugitive losses are noted.

The blow tanks are pressure-rated vessels and can be weakened by corrosion and repeated overpressure. Table 3-12 summarizes the malfunctions that may occur in the digester blow system.

TABLE 3-12. MALFUNCTIONS THAT MAY OCCUR IN DIGESTER BLOW TANK HOT WATER ACCUMULATOR SYSTEMS[2,17,42]

Malfunction	Primary effect	Result
Fouling of primary hot water accumulator, primary and secondary condensers	Reduced heat transfer and loss of condensate	Increased digester blow volume and increased TRS emissions
Low water flow rate to primary and secondary condensers or hot water accumulator	Increased condenser water temperature	Increased equilibrium TRS vapor pressure and TRS emission rates
Simultaneous digester blow	Overloading of primary and secondary condenser and/or TRS incineration system	Increased noncondensable gas volume, carryover of condensate into vent gas system, overpressure bypass to atmosphere, loss of cooking chemicals and increased TRS emissions
Corrosion of blow tank and ductwork	Fugitive condensable gases	Increased TRS emissions as a result of vent system by pass

3.2.3.3 Multiple-Effect Evaporators--

The primary malfunctions that affect evaporators are associated with fouling of the evaporator body and ambient air infiltration.[2,12,21] Both can result in reduced evaporator efficiency. Ambient air infiltration results in increased noncondensable gas volumes and reduced condenser performance, which can result in low water temperature and increased equilibrium TRS vapor pressures.[43] In systems that use alkaline scrubber noncondensable gas control,

loss of water flow, reduction in alkali content, or an increase in gas volume can result in lower mass transfer rates and increased TRS emission rates. Table 3-13 summarizes the malfunctions that may occur in multiple-effect evaporator systems.[2,12,43,44]

3.2.3.4 Black Liquor Oxidation--

Malfunctions in the black liquor oxidation system generally result in reduced oxidation efficiency (high outlet sulfidity) which produces elevated TRS concentrations from the recovery boiler. Malfunctions include reduced air flow volume, pluggage of oxygen injection system, increased black liquor flow rates, liquor foaming, and increased inlet liquor sulfidity. Table 3-14 summarizes the malfunctions that may occur.[33]

3.2.3.5 TRS Vent Control System--

The TRS vent control system collects noncondensable gases from the blow tank, hot water accumulator, and other miscellaneous systems. Increases in gas volume may exceed system design and limit the ability of the sources to be evacuated. Increased flow rates result in higher static pressure losses through the lines and may require larger gas-moving equipment.

For safety reasons, the concentration of the organic vapor must be maintained either below the lower explosive limits or above the upper explosive limits. Flash-back flame protection devices must be used to prevent explosions.

Entrained moisture must be removed from the gas stream to prevent cooling or blowout of the incinerator flame. Large variations in flow must be minimized to stabilize flame temperature and maintain acceptable residence time.[45] Table 3-15 summarizes the malfunctions associated with the noncondensable gas incineration system.

3.2.4 Inspection of Pulping Department

Because emissions from the pulping department are gaseous in nature and the gases are potentially hazardous at high concentrations, physical measurement and evaluation of emission sources are limited.

Inspections of these sources are generally based on information concerning equipment specifications, process procedures, process weights, and/or control equipment bypass and malfunction. The ability of the inspector to measure TRS concentrations with hand-held equipment is extremely limited. Errors in

TABLE 3-13. MALFUNCTIONS THAT MAY OCCUR IN MULTIPLE-EFFECT EVAPORATOR SYSTEMS[2,12,43,44]

Malfunction	Primary effect	Result
Evaporator fouling and scaling	Reduced evaporator efficiency	Reduced boiler efficiency and increased TRS emissions
Ambient air inleakage into evaporator body	Increased noncondensable gas volume	Reduced condenser efficiency and increased TRS emissions
Low condenser water flow rate	Increased condenser outlet water temperature	Increased condenser equilibrum TRS vapor pressure and TRS emissions
High inlet condenser water temperature	Increased condenser outlet water temperature	Increased condenser equilibrium TRS vapor pressure and TRS emissions
Reduced scrubber water flow rate	Reduced liquor-to-gas ratio, reduced mass transfer and adsorption	Increased TRS emissions and decreased removal efficiency
Increased scrubber gas volume	Increased superficial velocity through scrubber, reduced liquor-to-gas ratio, reduced mass transfer and adsorption, increased mist eliminator carryover	Increased TRS emissions and decreased removal efficiency
Scrubber packing flow channeling	Reduced liquor-to-gas contact, reduced mass transfer and adsorption	Increased TRS emissions and reduced removal efficiency
Liquor foaming	Liquor carryover and reduced heat transfer	Reduced evaporator efficiency, decreased final liquor solids attainable and increased TRS emissions
Separation of soap from liquor	Liquor carryover and reduced heat transfer	Reduced evaporator efficiency and increased TRS emissions
Carbonaceous deposits in evaporator body	Liquor carryover and reduced heat transfer	Reduced evaporator efficiency and increased TRS emissions

TABLE 3-14. MALFUNCTIONS THAT MAY OCCUR IN BLACK LIQUOR OXIDATION SYSTEMS

Malfunction	Primary effect	Result
Reduced air flow volume through oxidation tank	Reduced oxidation of sodium sulfide	Increased outlet liquor sulfidity and TRS emissions
Plugging of air sparge	Stratification of liquor air column and reduced contact	Increased outlet liquor sulfidity and TRS emissions
Increased liquor flow rate	Decreased liquor residence time and oxygen adsorption	Increased outlet liquor sulfidity and TRS emissions
Liquor foaming	Foam carryover limits system liquor volume and blowing rates	Increased outlet liquor sulfidity and TRS emissions
Increased inlet liquor sulfidity		Increased outlet liquor sulfidity and TRS emissions

TABLE 3-15. MALFUNCTIONS THAT MAY OCCUR IN NONCONDENSABLE GAS INCINERATION SYSTEM

Malfunction	Primary effect	Result
Increased flow volume	Exceeding system design, reduced residence time	Fugitive TRS emissions, increased TRS emissions due to incomplete combustion
Operation between lower and upper explosive limits		Potential for explosion
Low gas flow velocity	Operation below flame propagation velocity	Potential for explosion and/or fire
Entrained moisture	Flame blowout, reduced flame temperature	Increased TRS emissions as a result of incomplete combustion and potential for explosion

measurement due to interference are a major concern. In addition, some sources are vented through small pipes at high velocity, which makes it extremely difficult to measure flow.

Because the emissions are gaseous, visible emission evaluations are not useful except for fugitive emissions in the area between the blow tank and hot water accumulator. In this area the presence of a leak is observed as a condensed water plume.

Special care must be taken in such areas to avoid confined spaces in which toxic concentrations of hydrogen sulfide may accumulate. The inspector should carefully avoid any contact with process vent plumes that may contain TRS gases.

The following discussions concern information that should be documented for each process step to allow calculation of process weights, operating cycles, and control equipment performance. In many instances, the data required do not apply to the calculation of emission rates from a specific source, but are necessary for analysis of other process operations in the chemical recovery cycle.

3.2.4.1 Digester--

The inspector should determine the cooking cycle of the digester, the charge weight, the white liquor charge weight, the liquor sulfidity, and the digester volume. The number of cooks per day is an indication of the level of operation, assuming reasonably constant pulp yield.

The volume of the blow tank and blow time, together with the calculated blow volume, can be used to calculate the size of primary and secondary condensers in the hot water accumulator. The occurrence of simultaneous digester blows can overload the system. The inspector should observe the blowing operation to determine if condensable gases are being lost from ducts as a result of overpressure in the system. These fugitives bypass the TRS noncondensable gas system.

Malfunctions concerning the blow tank system occur primarily as a result of condenser plugging. The final equilibrium vapor pressure of TRS gas in the gas stream is defined by the secondary condenser temperature and gas stream pressure. In cases of condenser plugging, the heat exchange rate across the condenser and the outlet water temperature are reduced. The inspector should

review operating charts for the condenser water temperature differential (inlet/outlet) to determine if a trend is occurring that would indicate fouling.

In some systems the noncondensable gas volume is monitored and recorded by automatic instruments. The inspector should review these data to determine if peak gas flow is within the design specifications of the incineration system. It is suggested that the inspector request and maintain a process flow diagram for the noncondensable gas system. Table 3-16 provides an inspection checklist for the digester system.

3.2.4.2 Digester Relief--

The digester relief system contains significant quantities of TRS compounds and turpentine. The amount of turpentine is a function of cooking variables, wood species, and time of year. The resinous woods produce the highest quantity of turpentine. To evaluate the operation of the relief system, it is necessary to know the relief gas flow volume and cycle time. The peak loading and highest temperature represent the most critical period. The digester relief gases are condensed in a surface condenser. The inspector should determine the final outlet gas temperature of the condenser (inlet/outlet), and the vacuum if steam ejectors are used. Changes in outlet gas temperature can indicate higher emission levels as the vapor pressure increases. Table 3-17 is an inspection checklist for the digester relief system.

3.2.4.3 Brown Stock Washers--

The inspection of brown stock washers consists of determining source location, process weight, and gas volumes. Emission levels are generally low and not controlled. Table 3-18 is an inspection checklist for the brown stock washer system.

3.2.4.4 Multiple-Effect Evaporators--

The inspection of multiple-effect evaporators consists of documenting the emission points, process weights, and control equipment used. Where condensers are used, the inspector should record the cooling water flow rate, condenser surface area, gas stream pressure (where ejectors are used), and the differential water temperature (inlet/outlet). Table 3-19 is an inspection checklist for multiple-effect evaporators.

TABLE 3-16. CHECKLIST FOR INSPECTION OF DIGESTER BLOW SYSTEMS

A Digesters

Number of digesters _____

Chip charge weight _____ tons

White liquor charge weight _____ ft^3/batch

Digester volume _____ ft^3

Cook time _____ min

Blow time _____ min

Cooks per day _____

B Blow Tank

Blow tank volume _____ ft^3

Pre-blow digester temp. _____ ^oF

Final blow tank temp. _____ ^oF

Blow time _____ min

Calculated blow volume _____ lb/h[a]

C Hot Water Accumulator

Hot water accumulator condensers

_____ Primary Type _____

_____ Secondary Type _____

Primary condenser temperature _____ ^oF

Water flow _____ gpm

Secondary condenser temperature _____ ^oF

Water flow _____ gpm

Surface area _____ ft^2

D TRS Control

Noncondensable gas volume _____ acfm

Temp. _____ ^oF

Pressure _____ in H_2O (vacuum)

(continued)

TABLE 3-16 (continued)

Vapor equalizer Type _____

Volume _____ ft^3

Noncondensable gas treatment method

_____ Incineration

_____ Scrubbing

Incinerator type

_____ Catalyst

_____ Direct fire

_____ Lime kiln

_____ Wood-waste boiler

_____ Fossil fuel boiler

_____ Recovery boiler

Dilution ratio at burner _____

Explosion protection _____ yes _____ no

Type: _____ Flame arrestors

_____ Bypass vent

_____ Rupture discs

TABLE 3-17. CHECKLIST FOR INSPECTION OF DIGESTER RELIEF SYSTEMS

Number of digesters _____

Relief flow rate _____ acfm

Noncondensable gas flow _____ acfm

_____ ^{o}F

Condensor type _____

Water flow _____ gpm

Inlet temperature _____ ^{o}F

Outlet temperature _____ ^{o}F

Surface area _____ ft^2

Operating pressure _____ in. H_2O (vacuum)

Turpentine recovery _____ gal/TADP

_____ gph

Noncondensable gas treatment _____ scrubber

_____ incinerator

_____ none

TABLE 3-18. CHECKLIST FOR INSPECTION OF BROWN STOCK WASHER SYSTEMS

Number of wash lines _____

Number of stages per line _____

Washer type vacuum _____ pressure _____ diffusion _____
batch _____ continuous _____

Process weight _____ TADP/day

Outlet weak black liquor flow _____ M lb/h
_____ gpm

Outlet weak black liquor solids _____ %

Exhaust hood gas flow rate _____ acfm
Exhaust hood gas temperature _____ ^{o}F

Control method _____ incineration
_____ condenser
_____ none

Noncondensable gas flow rate _____ acfm
Condenser water flow rate _____ gpm
Condenser water inlet temp _____ ^{o}F
Condenser water outlet temp _____ ^{o}F
Condenser surface area _____ ft^2

TABLE 3-19. CHECKLIST FOR INSPECTION OF MULTIPLE-EFFECT EVAPORATOR SYSTEMS

A. Multiple-Effect Evaporators

Number of evaporator lines _____

Number of effects _____

Manufacturer _____

Inlet conditions

Black liquor flow _____ gpm

_____ M lb/h

Black liquor solids _____ %

Outlet conditions

Black liquor flow _____ gpm

_____ M lb/h

Black liquor solids _____ %

Soap recovery _____ lb/h

Control type: Tail gas _____

Hot well _____

Noncondensable gas control

Scrubber _____

Incineration _____

None _____

Weak black liquor oxidation _____ yes _____ no

B. Noncondensable gas scrubber

Type _____

Superficial velocity _____ ft/min

Liquor to gas ratio _____ gal/1000 acfm

Liquor type _____ water

_____ white liquor

_____ alkaline solution

Liquor flow rate _____ gpm

Pressure drop _____ in. H_2O

(continued)

TABLE 3-19 (continued)

Outlet gas temperature _____ ^{o}F

Liquor alkalinity _____

pH _____

C. Tail Gas Condenser/Hot Well Condenser

Number of stages _____

Condenser type _____ barometric

_____ surface

Condenser area _____ ft^2

Pressure _____ in. H_2O (vacuum)

Water flow _____ gpm

Inlet temp. _____ ^{o}F

Outlet temp. _____ ^{o}F

Condenser inlet flow _____ acfm

Temperature _____ ^{o}F

Noncondenser gas flow _____ acfm

_____ ^{o}F

3.2.4.5 Black Liquor Oxidation--

Because the black liquor oxidation system determines the emission of TRS gases from direct-contact recovery boiler systems, the evaluation of the system is directed toward the final liquor sulfidity. The inspection is directed toward determining the operating parameters that affect the oxidation efficiency of the system. Table 3-20 is an inspection checklist for black liquor oxidation systems.

3.2.4.6 Condensate Stripping--

The inspection of the stripping system consists of measuring such key operating variables as condensate pH, steam flow, air flow, and condensate flow rate. Table 3-21 is an inspection checklist for stripping systems.

3.3 CHEMICAL RECOVERY

The two major sources within the chemical recovery portion of the kraft pulp mill are the kraft recovery furnace or boiler and the smelt dissolving tank. The kraft recovery boiler is used to combust spent liquor from the pulping process. The smelt dissolving tank, located below the recovery boiler, is a large vessel that continuously receives a molten mixture of sodium sulfide and sodium carbonate from the floor of the recovery boiler.

3.3.1 Recovery Boiler

The following subsections describe the kraft recovery boiler process, identify the sources of emissions from a recovery boiler, discuss the control techniques used to minimize emissions from the recovery boiler, discuss the possible malfunctions associated with operation of the recovery boiler, and present inspection procedures for the recovery boiler and associated control equipment.

The particulate matter and TRS emission rates from the recovery boiler depend on several interrelated boiler operating variables; e.g., firing rate, black liquor heat valve, black liquor concentration, total combustion air, primary air, black liquor sulfur-to-sodium ratio, primary air temperature, char bed temperature, and black liquor chlorine content. Section 3.3.1.2 provides a detailed discussion of how these variables affect the uncontrolled emission rate of the boiler and the overall performance of the electrostatic precipitator (ESP) used to control the particulate emissions from a recovery boiler.

TABLE 3-20. CHECKLIST FOR INSPECTION OF BLACK LIQUOR OXIDATION SYSTEMS

A. Black Liquor Oxidation

Oxidation type _____ weak _____ strong

Oxidation method _____ Air
_____ Oxygen

Weak black liquor oxidation (BLOX) _____ Porous plate diffusers
_____ Sieve tray tower
_____ Packed tower
_____ Agitated air sparging
_____ Rotating fluid contactor
_____ Other _____

Strong BLOX _____ Single-stage unagitated air sparging
_____ Two-stage unagitated air sparging
_____ Agitated air sparging

Liquor flow rate _____ gpm
_____ M lb/h

Liquor solids content _____ %

Residence time _____ h

Inlet liquor sulfidity _____g/liter
Outlet liquor sulfidity _____ g/liter

Oxidation efficiency _____ %

Air flow volume _____ acfm

B. Tower vent TRS control _____ yes _____ no

Control type _____ Condenser
_____ Scrubber
_____ Incineration

(continued)

TABLE 3-20 (continued)

Condenser type _____

Surface area _____ ft^2

Water flow _____ gpm

Inlet temp _____ ^oF

Outlet temp _____ ^oF

Operating pressure _____ in. H_2O (vacuum)

Noncondensable gas volume _____ acfm

Temperature _____ ^oF

Scrubber type _____

Superficial velocity _____ ft/min

Liquor/gas ratio _____ gal/1000 acfm

Liquor type _____ Water

_____ White liquor

_____ Alkaline solution

Liquor flow rate _____ gpm

Pressure drop _____ in. H_2O

Outlet gas temperature _____ ^oF

Liquor alkalinity _____

pH _____

Incinerator type

_____ Catalyst

_____ Direct fire

_____ Lime kiln

_____ Wood-waste boiler

TABLE 3-21. CHECKLIST FOR INSPECTION OF CONDENSATE STRIPPING SYSTEMS

A. Condensate Stripping Systems

Type _____ Air _____ Steam _____

Foul condensate flow rate _____ M lb/h

_____ gpm

B. Air Stripping

Column type: Tray _____ Other _____

Number of trays _____

Tray distance _____ in.

Column diameter _____ in.

Air volume _____

Condensate inlet temperature _____ ^{o}F

Condensate pH _____

C. Steam stripping

Column type: Tray _____ Other _____

Number of trays _____

Tray distance _____ in.

Column diameter _____ in.

Steam flow _____ lb/h

Condensate inlet temperature _____ ^{o}F

Condensate pH _____

TRS and SO_2 emissions are controlled by the optimization of process variables that cause sulfurous gases to become chemically combined with sodium to form a particulate emission which is collected by the ESP.

The malfunctions that the increase emissions from the recovery boiler are generally divided into two areas: 1) those that occur as a result of furnace operation, and 2) those that occur as a part of control equipment operation. Several malfunctions that result from improper boiler operating practices also have an impact on ESP performance. Section 3.3.1.4 provides a detailed discussion of both boiler and ESP malfunctions that affect emissions. A summary table (Table 3-22 on page 184) is provided that lists the key parameters and potential malfunctions and their affect on the overall emission rates associated with recovery boiler operation.

A considerable amount of information is presented in Section 3.3.1.6 on the inspection of recovery boilers and ESP's. The specific kinds of data that should be collected (Table 3-23 on page 191) during the inspection is identified along with a discussion of the procedures and calculations that should be used to evaluate the inspection data to assess the overall continuous compliance status of the recovery boiler operation.

3.3.1.1 Process Description--

The kraft recovery boiler or furnace is an indirect water-walled steam generator used to produce steam and to recover inorganic chemicals from spent cooking liquors. The boiler consists of a large vertical combustion chamber lined with water tubes. The heat exchanger section typically consists of a low-pressure boiler, superheater, and economizer. Figure 3-42 shows a cross section of a modern Babcock and Wilcox (B&W) boiler.[12] The fuel used in the boiler is spent concentrated cooking liquor (black liquor). The liquor in the burners has a solids content of between 60 and 70 percent (depending on wood species and yield) and is made up of organic and inorganic fractions.[47,48] The organic fraction contains lignin derivatives, carbohydrates, soap, and waxes.[2,49] The inorganic portion consists primarily of sodium sulfate.

Black liquor is sprayed into the furnace at an elevated level in the combustion chamber through a number of steam or mechanical atomizing nozzles. The suspended liquor is burned as it falls through the combustion zone. The following are the major steps in the combustion process:[46]

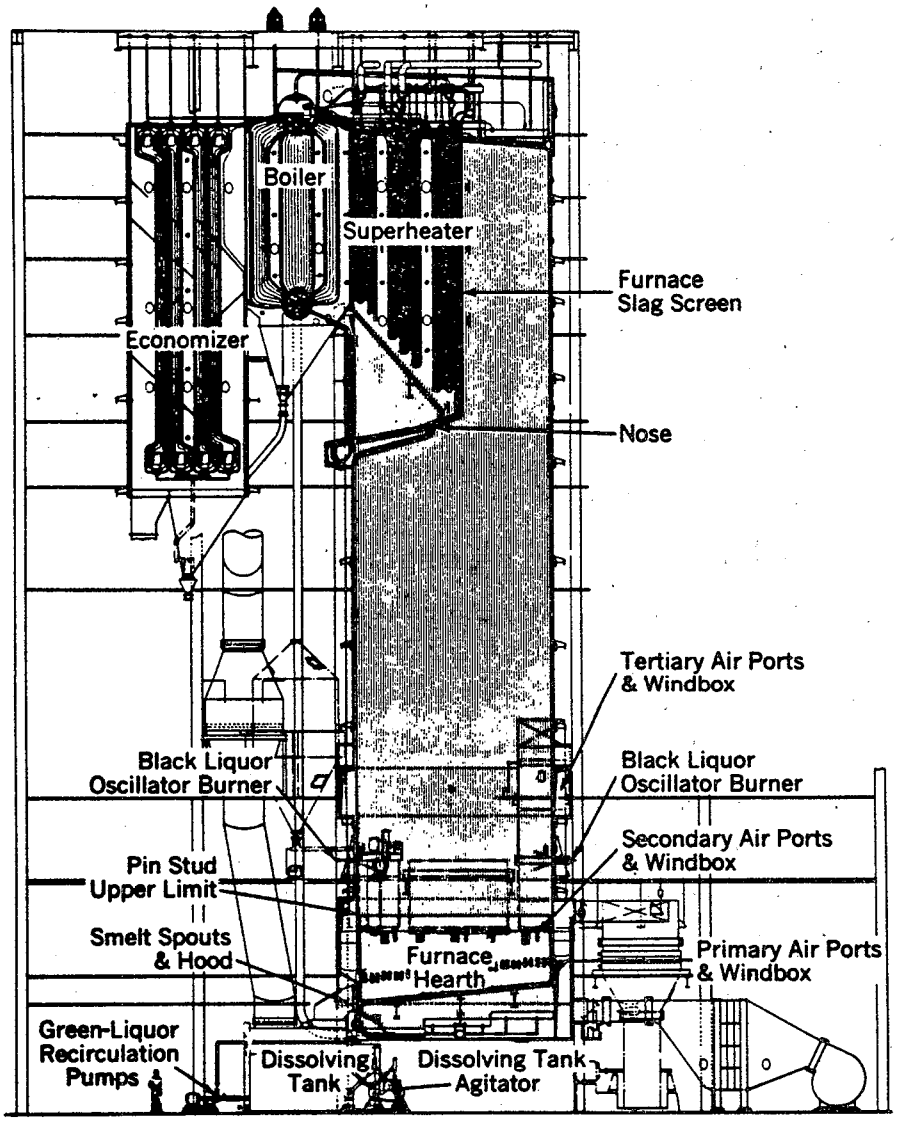

Figure 3-42. Cross section of B&W recovery boiler.[12,46]

- The liquor is dehydrated to form a char.
- The char is burned in a bed at the bottom of the furnace.
- The ash (inorganic portion) remaining after combustion of the char is exposed to active reducing conditions to convert sodium sulfate and other sodium-sulfur-oxygen compounds to sodium sulfide.
- The organic materials in the upper section of the furnace are oxidized to complete combustion.

Reduced inorganic material (smelt), which consists of a mixture of sodium sulfide and sodium carbonate, is continuously drained from the furnace. The ratio of sodium sulfide to sodium carbonate depends on the temperature and the ratio of sulfur to sodium in the fired liquor.

Combustion of the char begins on the hearth of the furnace. Air for combustion is supplied through air ports located in the furnace walls. The primary air supply is used to initiate char combustion. The primary air supply, which is introduced in the lower portion of the char, is kept to a minimum to maintain the necessary reducing conditions to convert the ash to sodium sulfide. The secondary air supply is located at a higher level in the furnace to create the oxidizing condition necessary to control the char bed height. A tertiary air supply may be used to complete combustion in the upper levels of the furnace and thereby eliminate reduced sulfur compounds. As the char bed is burned, the inorganic ash is liquified and drained to the furnace hearth, where it is reduced.

Figure 3-43 shows the location of air ports for the two major American-manufacturered recovery boilers. One uses primary, secondary, and tertiary air in finite zones or levels, and the other uses primary air with secondary air introduced tangentially.[12] Combustion gases produced by the burning of the liquor are passed through the heat exchanger section of the boiler before being exhausted to a particulate control device. The gases are cooled to about 805°F in the boiler tube bank before passing into the economizer. Temperatures of the gas leaving the economizer, which are about 750°F, are reduced in either indirect-contact or direct-contact evaporators.

There are three types of direct contact evaporators: cyclone, venturi, and cascade. Figures 3-44, 3-45, and 3-46 show the basic design for each. Cyclone evaporators concentrate the black liquor by placing it in contact

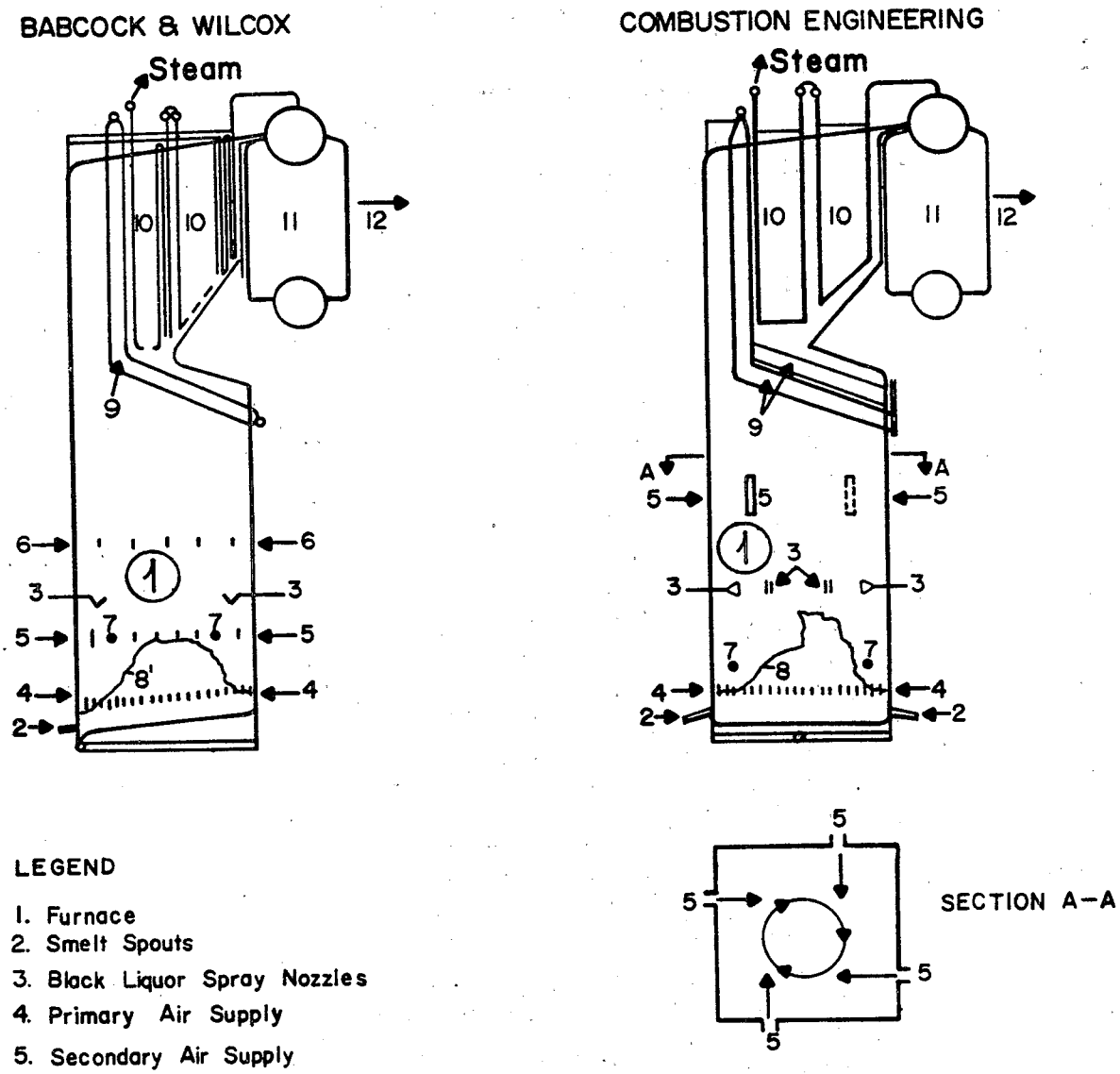

LEGEND

1. Furnace
2. Smelt Spouts
3. Black Liquor Spray Nozzles
4. Primary Air Supply
5. Secondary Air Supply
6. Tertiary Air Supply
7. Position of Char Bed Burners for Oil or Gas
8. Normal Configuration of Char Bed
8'. Same at Low Primary Air Flow and Pressure
9. Screen Tubes
10. Superheater
11. Boiler Tube Bank
12. Exit to Economizer

Figure 3-43. Difference in air systems in U.S. recovery boiler designs.[12]

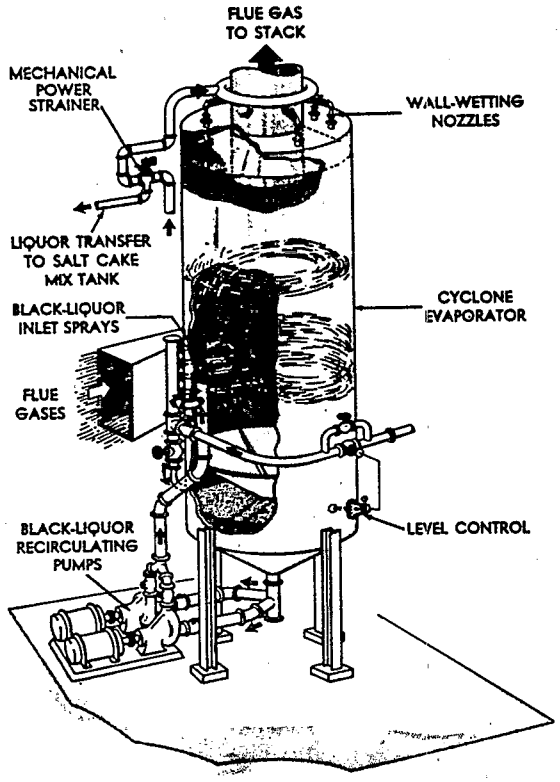

Figure 3-44. Cyclone evaporator.[48]

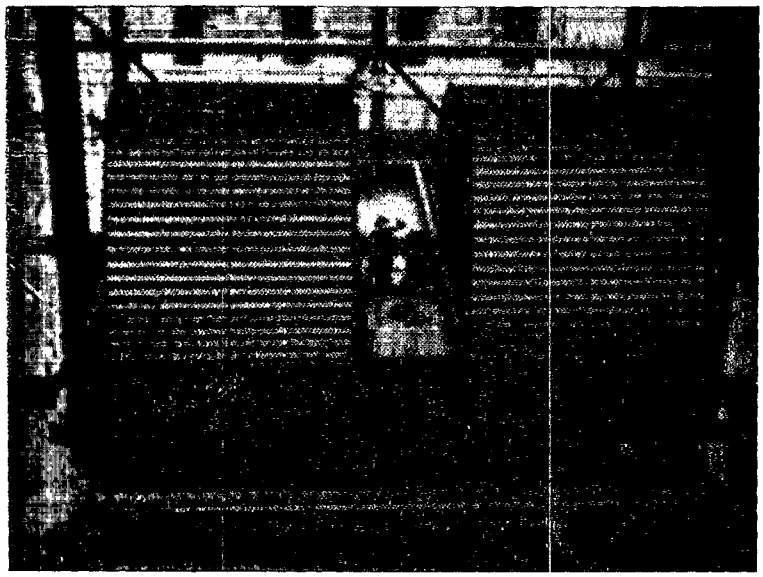

Figure 3-45. Cascade evaporator.[12]

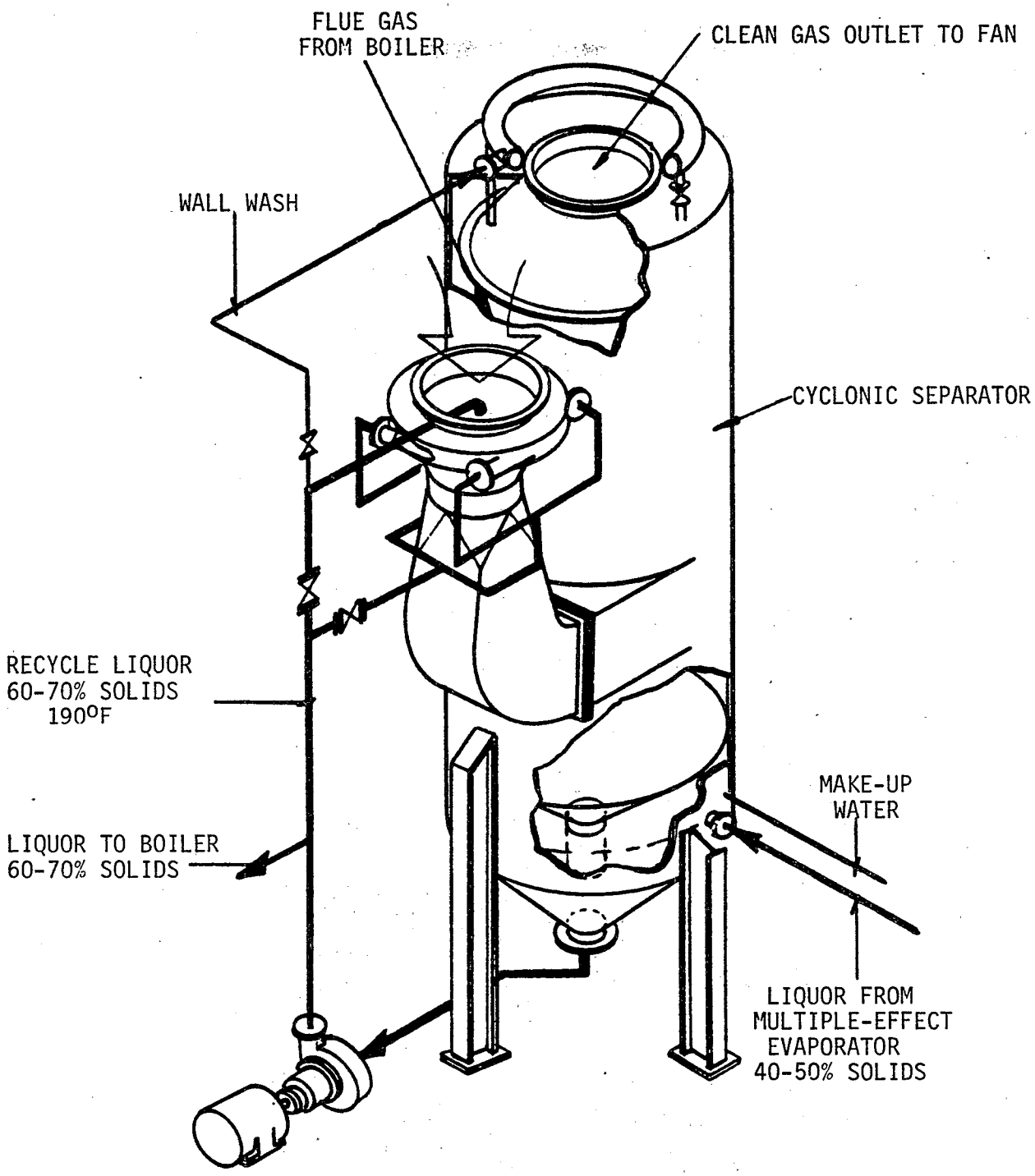

Figure 3-46. Venturi evaporator.[48]

with the high-temperature gas stream by using the wetted wall of the cyclone.[48] The cyclone removes approximately 50 percent of the uncontrolled particulate from the gas stream. A venturi evaporator concentrates black liquor by placing the flue gas in contact with liquor through the generation of liquor droplets. The droplets are generated through the shearing action of the gas stream as it passes a weir into which the liquor is being pumped. Venturi evaporators remove approximately 85 percent of the uncontrolled particulate emissions generated by the furnace when operated at 4 to 5 in. H_2O pressure drop. In the cascade evaporator, a thin film of liquor coats several tubes rotated through the flue gas stream. This type of evaporator will generally increase the black liquor solids content from 48 to 65 percent. The rate of evaporation is related to the flue gas temperature and the cascade rotation rate. The evaporator can be operated beyond design rates without substantial process upsets, and can remove up to 50 percent of uncontrolled particulate emissions from the furnace.

As a result of the direct contact of flue gases with the black liquor in the evaporator, there is considerable stripping of TRS compounds (i.e., generally H_2S) from the liquor. The loss of TRS compounds is primarily the result of a reaction between carbon dioxide (CO_2) and sodium sulfide in the liquor. Gases from the recovery boiler usually contain 12 to 15 percent CO_2. When the liquor is exposed to the gas stream, it absorbs the CO_2 and the liquor pH is decreased. The amount of H_2S released from the reaction ($Na_2S + CO_2 + H_2O \rightarrow Na_2CO_3 + H_2S$) increases as the pH is decreased and the concentration of sodium sulfide is increased. One method of reducing sodium sulfide concentration is to convert it to sodium thiosulfate through the use of black liquor oxidation.

Sulfur dioxide in the flue gas stream also can result in the release of H_2S as a result of decreasing pH. In many operations, however, the level of SO_2 is too low to have any significant effect on the H_2S emissions.

The amount of oxygen in the flue gas stream has an effect on the generation of TRS gases from the combustion process but appears to have negligible effect on the stripping of H_2S from the evaporator.

There are three types of indirect contact evaporators. Figure 3-47 shows the basic concept employed by each.[1] In general, these evaporators evaporate the liquor by use of a noncontact tube and shell design. Because the black

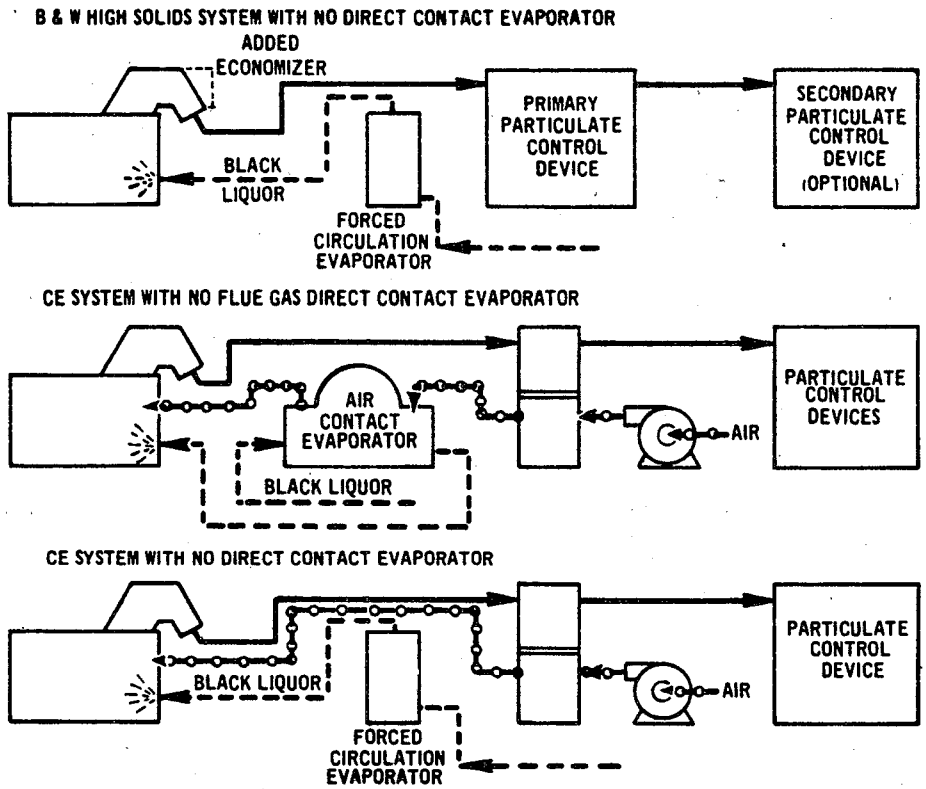

Figure 3-47. Three types of indirect contact evaporators.[1]

liquor in a noncontact evaporator design does not come in contact with the flue gas, stripping of TRS compounds is prevented. Evaporated water is condensed by using a tail gas condenser. Noncondensable gases are directed to lime kilns or into the furnace primary air system for incineration.

The high temperatures in the furnace char zone result in a partial vaporization of sodium and sulfur from the smelt. The fume is removed from the furnace with the combustion gases and condenses to a fine particulate consisting of sodium sulfate (Na_2SO_4) and sodium carbonate (Na_2CO_3).

Modern recovery boilers are sized for two process conditions: 1) the heat input to the furnace, and 2) the weight of the chemicals to be recovered. Both of these conditions affect the heat release rate as a function of furnace volume (Btu/ft^3) and furnace cross section or hearth area (Btu/ft^2). Typical design values are on the order of 9800 Btu/ft^3 (furnace volume) and 900,000 Btu/ft^2 (hearth area).[50] The exact dimensions of the furnace depend on the elemental composition, solids content, heat value, sulfidity, and chloride content of the black liquor. Deviations of 10 percent or greater in design variables should be investigated to ensure maximum efficiency.[50] The manufacturers generally consider the boiler to be overloaded when the firing rate (Btu/h) exceeds 120 percent of the rated value.

Operation outside of design values can increase emission rates as well as reduce thermal efficiency as result of tube fouling and reduced smelt recovery.

3.3.1.2 Sources of Emissions--

The uncontrolled particulate matter and TRS emission rates from the boiler depend on several interrelated boiler operating variables; e.g., firing rate [pounds of black liquor solids (BLS) per hour], black liquor heat value (Btu/pound BLS), black liquor concentration (% solids), total combustion air (excess air), primary air (% of total air), black liquor sulfur-to-sodium ratio (S/Na_2), primary air temperature (^oF), char bed temperature (^oF), and black liquor chlorine content (%).[51,52,53,54] In addition to affecting the uncontrolled emission rates, these variables can also reduce ESP performance. The following discussion addresses both of these effects.

It should be noted that reductions in TRS and SO_2 emissions from kraft furnaces result primarily from the optimization of process variables that cause sulfurous gases to become chemically combined with sodium to form a

particulate emission. Operation of the boiler under these process conditions can also result in increased uncontrolled particulate emissions in the form of sodium sulfate.

Firing Rate--The firing rate of a kraft recovery boiler is measured in pounds of black liquor solids per unit of time (either pounds BLS/24 hours or pounds BLS/hour). Given a specific heat value of the black liquor solids, percent solids in the liquor, and elemental composition of the liquor, the flue gas volume produced and boiler heat input can be defined. The firing rate of a recovery furnace is often increased to increase pulp production rates. Increasing the firing rates, usually requires an increase in the gallons per minute of the fired liquor. The firing rate is limited by the pumping capacity of the system based on the liquor temperature and viscosity.

The boiler combustion chamber is designed (i.e., sized) according to the expected heat release rate and volume of flue gas at maximum firing conditions.[54] An increase in the flue gas volume above design conditions causes an increase in vertical gas velocity through the furnace combustion zone and an increase in particulate emissions resulting from the entrainment of black liquor droplets and char particles. Thus, particulate emissions tend to increase with increased velocity. The loss of sodium-based particulate may increase as the flue gas volume is increased because of the higher gas velocities and temperatures on the hearth of the furnace. The release of sodium in the flue gas from the char bed increases as flue gas volume increases because of favorable diffusion conditions.[55] The release of sodium is also related to the temperature of the bed and is primarily the result of evaporation. The rate of evaporation depends on the diffusion conditions (gas velocity) in the zone between the flue gas and the char bed.[56,57]

An increase in flue gas volume also increases the velocity passing through the steam tubes and decreases the efficiency of heat transfer. This decrease in thermal efficiency reduces the overall boiler efficiency and increases the stack temperature. Because of the increased gas volumes and their effect on char bed temperature, TRS emissions also tend to increase with boiler firing rate. Figure 3-48 shows the effect of firing rate on TRS and steam generation rates for a typical boiler.[1]

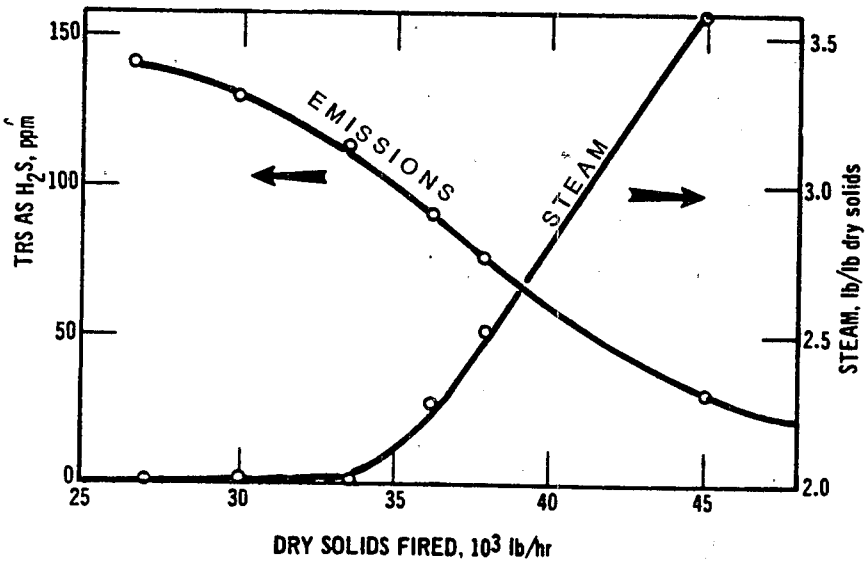

Figure 3-48. Effect of solids firing rate on reduced sulfur emissions and steam generation efficiency.[1]

Based on computer models of recovery boiler operations, the particulate emissions (gains per dry standard cubic foot) increase sharply with increases in the heat value and solids content of the black liquor (Figures 3-49 and 3-50). These changes are primarily the result of changes in the heat production rate of the char bed.[54]

Because the heat value and solids content of black liquor are dependent on a number of process variables in the pulping process (e.g., digesters, evaporators, wood species, and harvest conditions), day-to-day firing conditions and liquor properties may vary significantly.

Increased firing rates in the recovery furnace can increase flue gas flow rates. The amount of flue gas produced by the combustion of a specific black liquor can be calculated by developing a factor similar to an F-factor, which is defined by the elemental composition of the liquor. The F-factor is the measured flue gas volume (dry standard cubic feet per minute corrected to 0% flue gas oxygen) divided by the boiler black liquor solids firing rate (pounds BLS/minute). The value of the F-factor varies from mill to mill

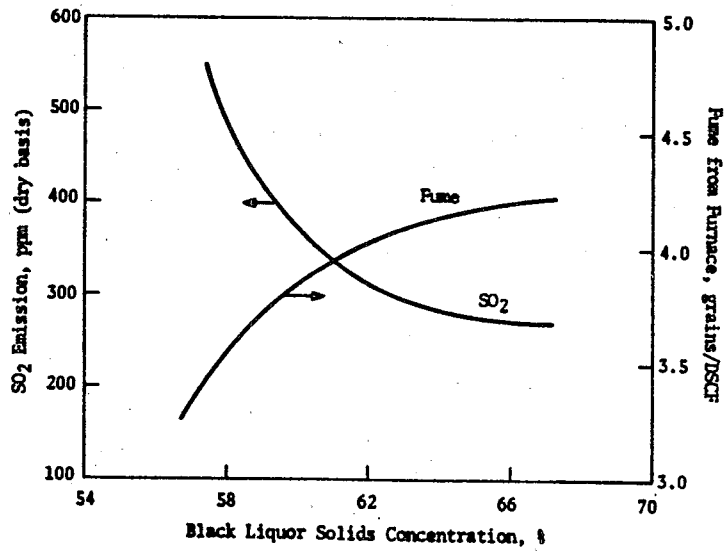

Figure 3-49. Effect of black liquor solids concentration.[54]

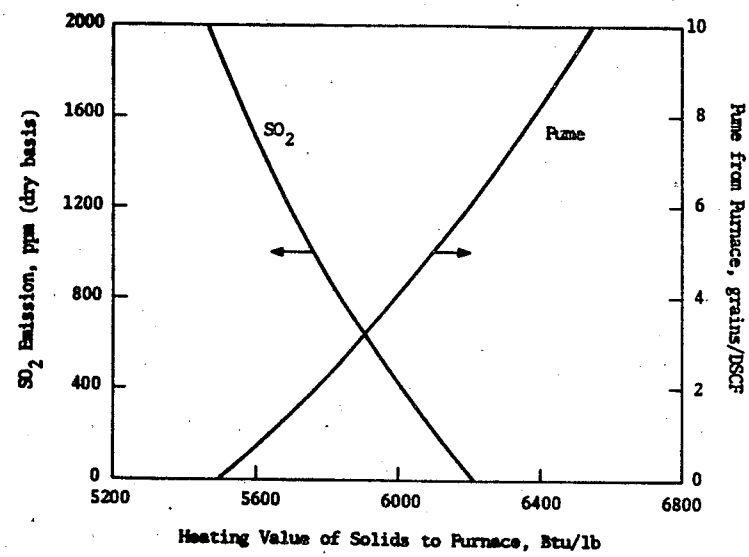

Figure 3-50. Effect of black liquor heating value.[54]

because of the variation in species, pulp yield, makeup chemicals, and evaporator operation. This value, however, is reasonably constant for a specific mill.[58]

Knowledge of the F-factor allows periodic calculation of flue gas volumes to ensure that the boiler is not exceeding design values. For a more accurate calculation of velocities in the combustion chamber and the total flue gas volumes, the F-factor must be corrected for water evaporated from the fired liquor, water of combustion, temperature, excess air, and miscellaneous additions such as steam from soot blowing.

Estimates of uncontrolled emission rates as a function of furnace firing rate are boiler-specific. Generally, the uncontrolled emission rate of a typical indirect-contact, recovery boiler is 8.0 gr/dscf. A baseline uncontrolled emission rate for use in making future comparisons generally can be obtained from the vendor's acceptance performance stack test on the ESP. In summary, increased firing rates increase both the flue gas volume and the uncontrolled particulate emission levels.

Char Bed Temperature--As the firing rates of a recovery boiler are increased, the temperature and diffusion conditions in the char bed tend to increase. This in turn leads to an increase in uncontrolled particulate emissions from the boiler. A qualitative discussion of the mechanisms by which particulate emissions are increased is presented in the remainder of this subsection. Dehydrated liquor (char) on the furnace hearth is burned at a high temperature to allow the inert portion of the liquor to be melted and drained from the hearth. A mixture of sodium sulfide and sodium carbonate must be maintained under reducing conditions to prevent oxidation to sodium oxides.

Under normal operation, elemental sodium is vaporized and reacts to form Na_2O. The rate of evaporation depends on the char bed temperature and the diffusion conditions in the smelt zone. As the sodium evaporates from the bed, it reacts with oxygen in the primary air zone to form Na_2O. The Na_2O reacts with CO_2 to form Na_2CO_3.[55]

The char bed temperature also determines the rate of sulfur released to the flue gas. Sulfur is commonly present in the flue gases as S, H_2S, SO_2, or SO_3. The higher temperatures favor the formation of SO_2 and SO_3. Sulfur in the form of S and H_2S reacts with excess oxygen in the oxidizing zones of the furnace to form SO_2 and SO_3. The Na_2CO_3 reacts with the SO_2 to form Na_2SO_3,

which is later oxidized to Na_2SO_4. Typically, the Na_2SO_4 deposits on the heat exchanger surfaces (screen tubes, superheater, and boiler tubes) and must be removed through continuous sootblowing. These deposits reduce the heat transfer and the overall efficiency of the boiler. This increases the gas temperature entering the ESP, as well as the superficial velocity. As a result, there is a tendency to overfire the boiler to achieve the required steam flow.

Computer models of smelt bed temperatures indicate that the smelt bed temperature is a function of total combustion air and primary air. Figures 3-51 and 3-52 show smelt bed temperature as a function of total and primary air, respectively.[54]

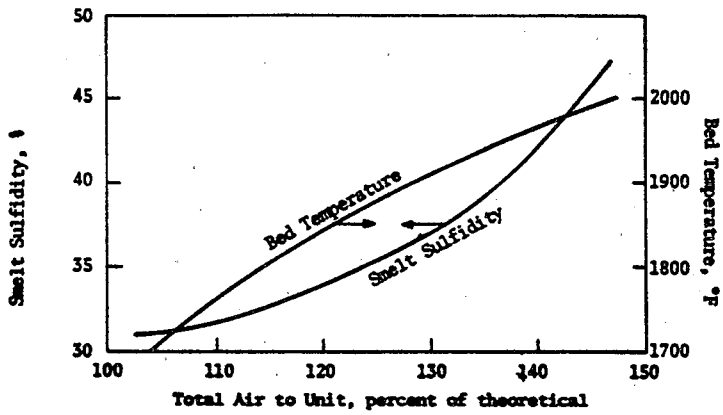

Figure 3-51. Bed temperature as a function of total air.[54]

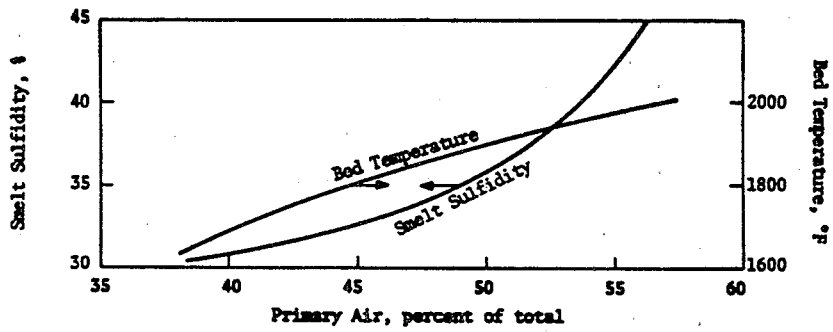

Figure 3-52. Bed temperature as a function of primary air.[54]

Boiler Excess Air--The amount of combustion air supplied to the furnace influences the chemical-thermodynamic equilibrium at the smelt bed. This determines the amount of sodium that is volatilized and ultimately lost from

the smelt bed. Figure 3-53 shows the theoretical loss of particulate from the furnace as the total air to the furnace is increased (primary air is fixed at 45%).[54]

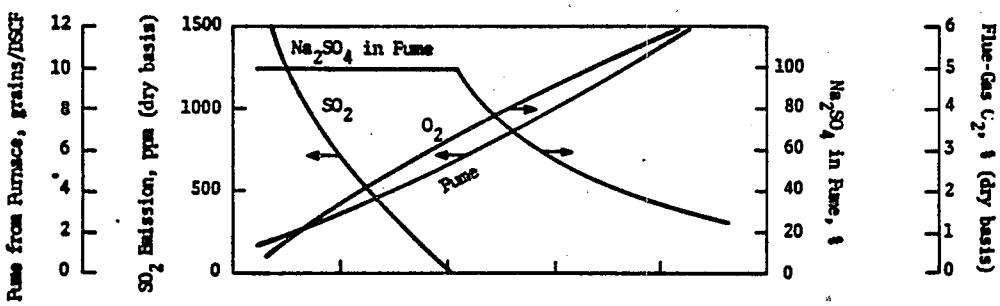

Figure 3-53. Effect of total air supplied to the unit.[54]

The amount of boiler excess air needed for complete combustion is normally between 110 and 125 percent of theoretical air (stoichiometric air). A minimum level of excess oxygen (1 to 2%) must be maintained to ensure complete combustion and reduce the formation of H_2S.[12] When the amount of excess air is above 125 percent (5% O_2 in the flue gas), the formation of SO_3 increases.[59] The formation of SO_3 and H_2SO_4 can be increased considerably if a residual fuel oil with a high content of vanadium pentoxide (V_2O_5) is fired in combination with the black liquor. The SO_3 is absorbed in the particulate at low temperatures, which makes the particulate sticky.[12] This sticky particulate fouls heating surfaces in the economizer and reduces heat transfer rates. The deposits may result in a high draft across the economizer. The particulate also causes severe operating problems when collected on the plates of the ESP. The sticky salt cake (particulate) cannot be removed effectively by boiler soot blowers or removed from the ESP plates by normal rapping intensity.[60]

Higher than normal excess air increases the volume of flue gas, which results in increased furnace vertical velocities and reduced heat transfer efficiencies. If the high excess air is caused by an increase in primary air in the char bed zone, sodium evaporation will increase along with the particulate emission rate. When the high excess air is caused by increased secondary air, the formation of SO_3 in the flue gas is more likely.

In summary, the firing of the boiler at high excess air has three effects: 1) increased particulate emission rates on an uncontrolled basis, 2) increased flue gas volume to the ESP, and 3) formation of SO_3 that reduces ESP power as a result of salt cake buildup on both the plates and the wires.

Primary Air--Primary air is required to provide complete combustion and to maintain the temperature in the char bed to prevent a condition called "blackout." The amount of air is a compromise between maintaining sufficient combustion and reducing abnormally high vertical velocities in the furnace. The total air volume (secondary plus primary) must be high enough to produce complete combustion, but be limited so as to reduce the vertical velocity in the furnace and total flue gas volume.[12] A higher velocity increases the release of sodium and sulfur from the char bed because of the increase in diffusion of the vapor from the bed. The higher volume also increases the combustion rate of char, which increases bed temperature. Figure 3-54 shows the theoretical loss of particulates as a function of percentage increases in primary air. This produces an accumulation of deposits on the heating surface of the boiler (after cooling of the gas stream and condensation of fume). This accumulation causes an increase in the particulate emissions.

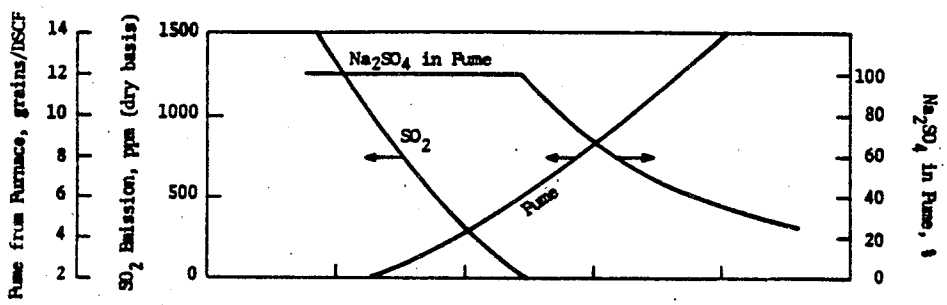

Figure 3-54. Theoretical loss of particulate as a function of percentage increases in primary air.[54]

Prolonged operation at low primary air volumes can increase char bed height, which must be reduced by an increase in bed temperature. The most common method of reducing the bed height is to increase the primary and secondary air volumes.

Secondary Air--The total amount of primary and secondary air required for combustion is between 110 and 125 percent of theoretical air (stoichiometric air). The normal limits are between 2 and 5 percent excess O_2.

The secondary air should be a minimum of 40 percent of the total air (maximum of 65 percent of the theoretical air).[12] In boilers with a high char bed, the secondary air has two purposes. The primary purpose is to complete combustion of CO gas released from the char bed as it moves up the furnace walls.[61] The secondary purpose is to provide primary air in the center of the furnace to burn the char bed.

Primary Air Temperature--The primary air temperature has a direct influence on the smelt bed temperature. An increase in the primary air temperature has the same effect as an increase in the primary air volume. Figure 3-55 shows the effect of primary air temperature.[54] In modern designs, the primary air is heated with indirect steam to approximately 400°F to increase the bed temperature. This reduces the TRS emissions from the bed and increases the emission of Na_2SO_4.[50] Changes in primary air port design are also used to increase velocities, which help to stabilize bed temperature through better air penetration.

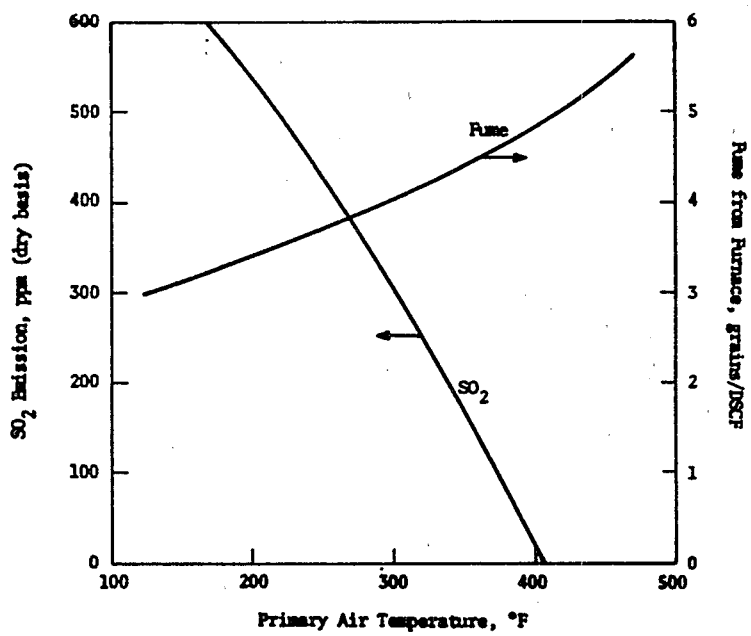

Figure 3-55. Effect of primary air temperature.[54]

Sulfur-to-Sodium Ratio--As the ratio of sulfur to sodium in black liquor increases, the amount of sodium in the smelt that is available to combine with sulfur gases is reduced. This results in an increase in SO_2 and TRS emissions and a decrease in sulfidity across the furnace. As a result, the smelt has a lower sulfidity (Figure 3-56). At sulfidity levels in excess of 30 percent it is difficult to comply with applicable TRS emission standards.[50,54]

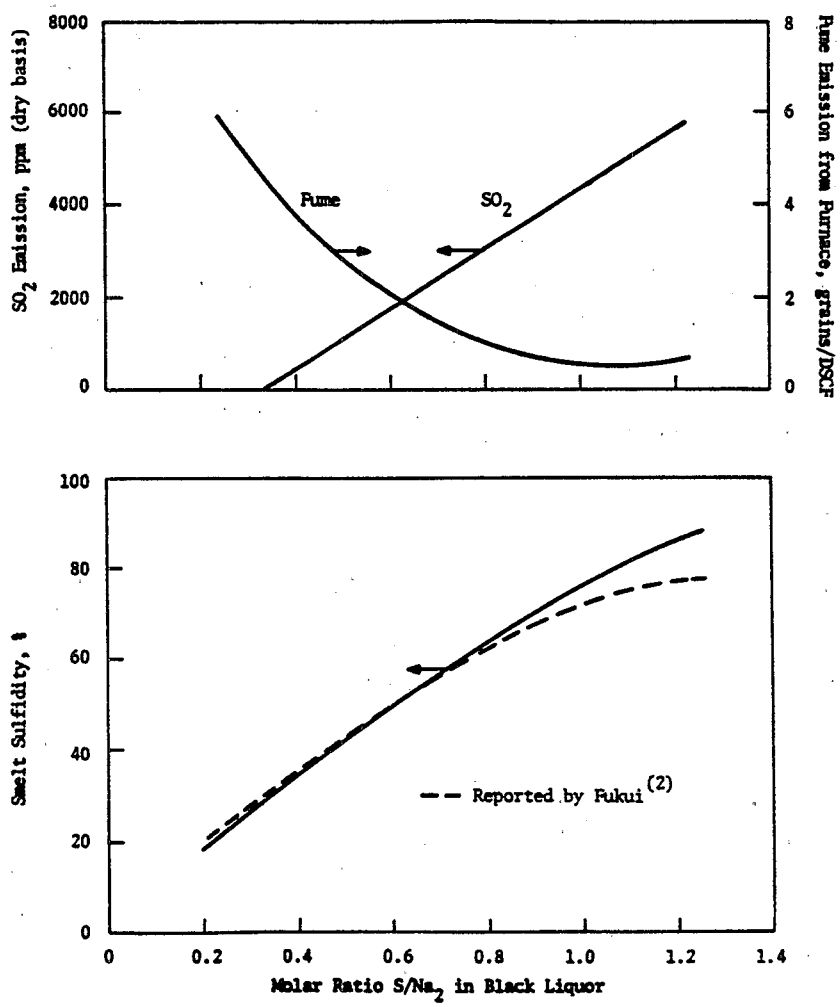

Figure 3-56. Effect of sulfur-sodium ratio in the black liquor.[54]

Chlorine in Black Liquor--Chlorine can enter the pulp process through wood-born contaminants, chemicals, or mill wastes. The most common sources are saltwater log storage and bleach plant effluent. The presence of small amounts of chlorine increases the loss of particulates from the smelt bed. The chlorine combined with sodium (NaCl) is highly volatile. Figure 3-57 shows the theoretical loss of sodium chlorides as a function of percent chlorine in the fired liquor.[54] The loss of HCl from the furnace can increase corrosion in the ESP and ductwork if significant cooling occurs as a result of inleakage or improper insulation.[60]

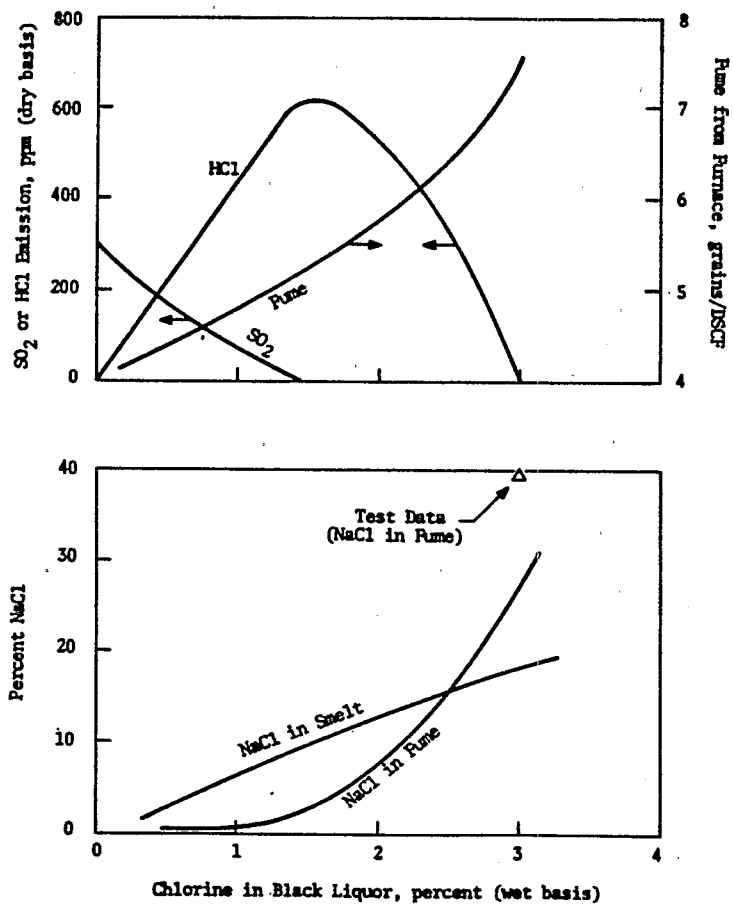

Figure 3-57. Effect of chlorine in black liquor.[54]

3.3.1.3 Control--

The primary method of controlling particulate emissions from recovery furnaces is electrostatic precipitation. At one time venturi scrubbers were used for primary and secondary particulate control on some designs; however, since their use has been discontinued, the following discussion is limited to ESP's.

Equipment Design--The three basic processes in electrostatic precipitation are 1) the transfer of an electric charge to suspended particles in the flue gas, 2) the establishment of an electric field for removing the particles to a collecting electrode, and 3) removal of the particles from the ESP with as little loss to the atmosphere as possible. Figure 3-58 illustrates the basic processes involved in electrostatic precipitation.[62]

Particulate matter is collected in an ESP by means of an electrical charge placed on the particles and a grounding surface of opposite charge. The particles move in an electrostatic field created by electrodes operating at a negative potential ranging from 30,000 to 80,000 volts. The electrodes consist of wires placed perpendicular to the gas flow between collecting plates. As the potential on the electrodes is increased, electrons are released that charge the particles passing between the wires and plates.

Depending on the size of the wire and its roughness, shape, and dust coating, changes occur in the voltage at which the electrons begin to flow (as measured by secondary current). The cloud of electrons surrounding the electrode is called a corona, and the voltage at which current occurs is defined as the corona initiation voltage.

The charged particles move to the collecting plates and bleed their charge through the dust layer. The rate of release of this charge is indicated by the secondary current. When the dust concentration in the gas stream is low, the relationship between secondary voltage and secondary current is an expression of the electrical resistance of the system.

The secondary voltage and resulting secondary current may be increased until the potential is high enough to allow a spark to occur directly through the gas stream to the plate. This results in power loss without the charging of particles. In older ESP designs, the optimum utilization of power (highest efficiency) occurred at moderate spark rates (>50/min). With the use of new

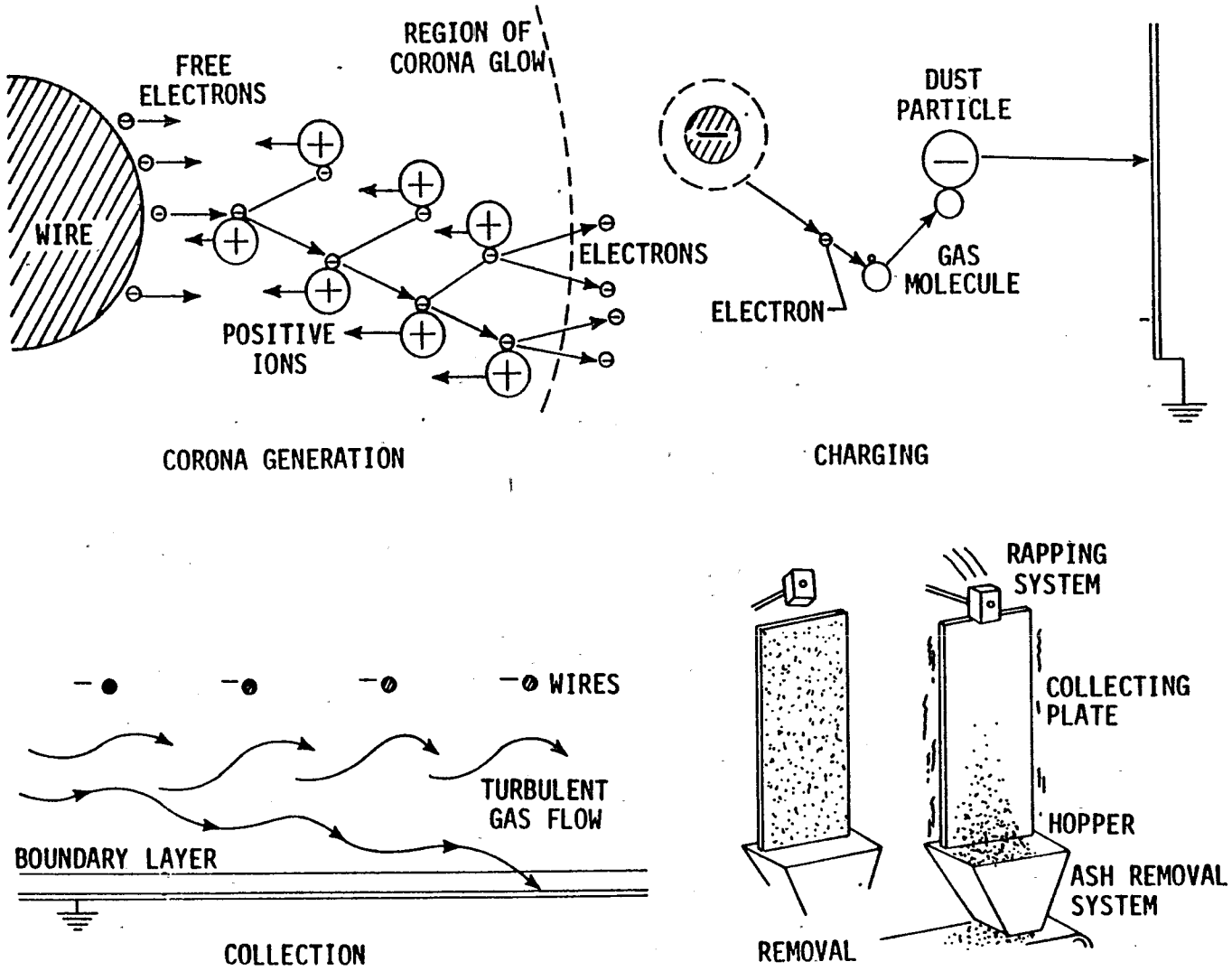

Figure 3-58. Basic processes involved in electrostatic precipitation.[62]

digital control systems that sense the occurrence of sparking, optimum power levels can be maintained without sparking or at a moderate spark rate (<50/min).

Figure 3-59 shows the general arrangement of an ESP.[62] The space between the plates is called the gas passage or lane. Although the spacing between plates varies with manufacturer, it is typically between 9 and 10 in. The electrodes (wires) are placed at equal distances between the plates (at 8-in. intervals in the direction of gas flow). The wires may be individually supported and tensioned by use of weights or rigidly held in a frame. The electrode cross section may be round, square, twisted, barbed wire, or strained barbed wire. The shape and diameter determine the corona initiation voltage.

In general, the resistance of the particle to conduct its charge to the collecting surface is defined as the particle resistivity. The high moisture content of the gas stream from recovery furnaces results in a highly conductive particle (low resistivity). This low resistivity allows the particle to release the charge quickly at the plate and to be effectively removed from the plate with moderate plate rapping.

Power is supplied to the ESP by rectified high-voltage transformers. The rectifiers may be full-wave or double half-wave design, depending on the sectionalization (chambers) of the ESP (Figure 3-60).[63]

The ESP is divided into separate collection surfaces arranged in series to allow increases in power levels as dust is removed from the gas stream and to allow individual field rapping. The total power input to each successive field increases until the transformer-rectifer (T-R) set limit is reached. Power usage by each section (field) is indicated by the product of primary voltage and current of the transformer and by the product of secondary voltage and current of the rectified power supply. The primary power level is not considered a true measurement of ESP power because of inefficiencies and losses in the transformer and rectifier. Although the secondary power readings indicate the power delivered to the ESP, in some cases they do not measure the power delivered to the particle charging mechanism because of insulator tracking, distribution losses, etc.

Because of the nature of the charging process, the collection efficiency is affected by the length of time the particles are in the electrostatic field (time of treatment). Because the physical dimensions of the ESP are fixed, the time of treatment is determined by the total gas flow rate, box

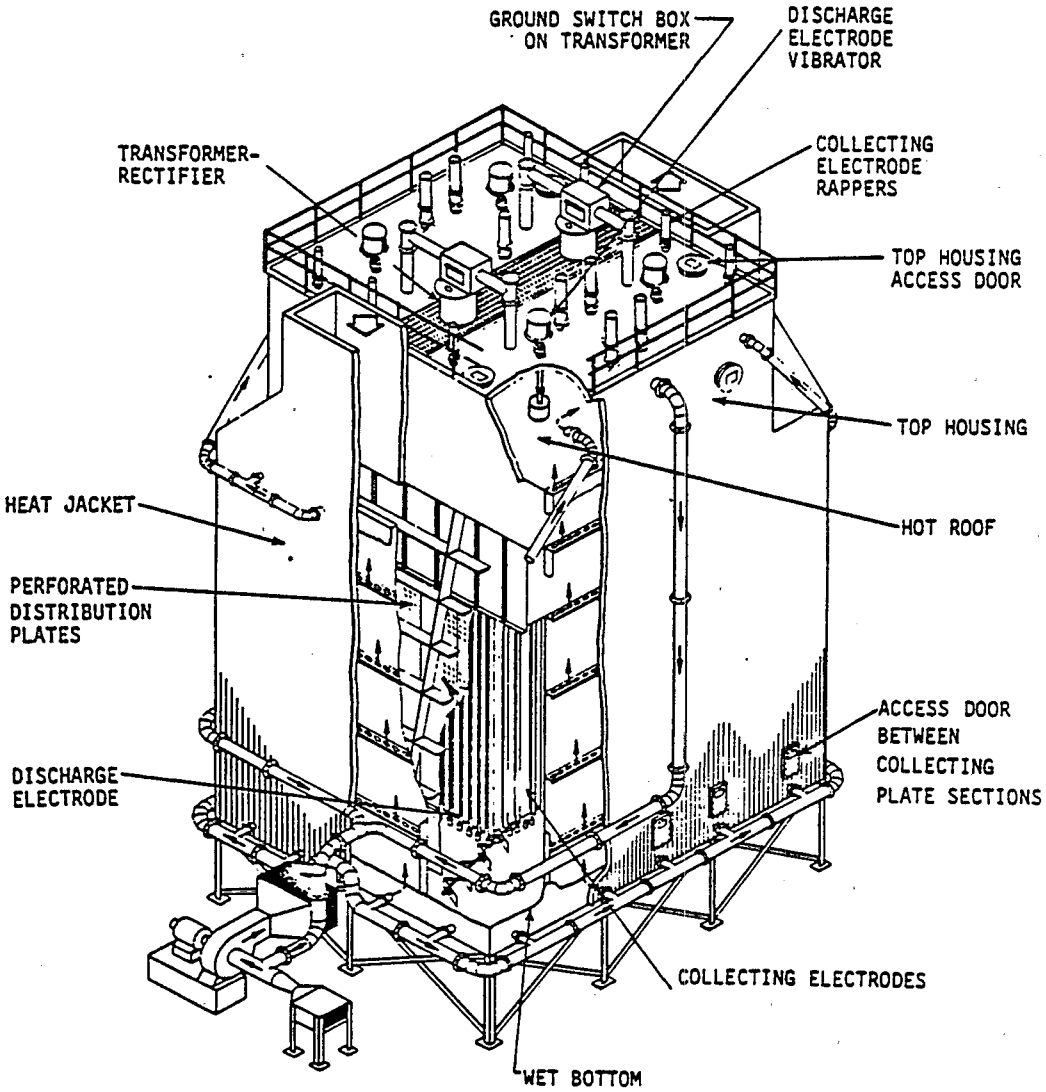

Figure 3-59. Typical wet-bottom ESP with heat jacket.[62]

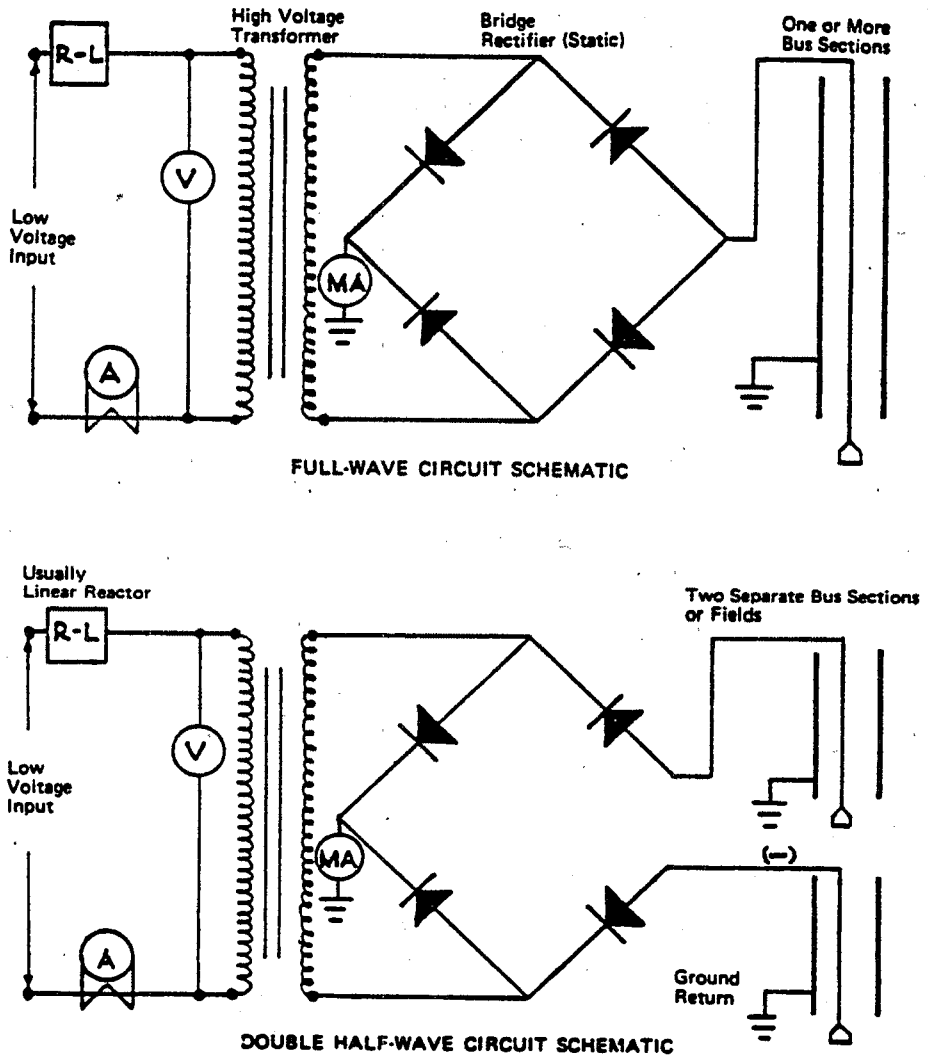

Figure 3-60. Electrical diagram for ESP T-R set.[63]

length (number of fields), and cross-sectional area; i.e., the time of treatment is defined by the superficial velocity between the plates and the box length. The deviation from the average velocity is limited to ±10 percent of the mean value.

The design amount of power to be delivered to the ESP in each field is sometimes specified in terms of the length of the wire electrodes. The inlet field is typically sized for 0.2 milliamp (mA)/ft of wire, and the outlet field may be sized for up to 0.10 mA/ft of wire.[64] Accordingly, the inlet field T-R sets are sized to be consistent with anticipated power consumption. The plate area used per 1000 acfm of gas being treated is one convenient measure of the potential collection capability of the ESP. This term is defined as the specific collection area in square feet/1000 acfm.

There are two methods of supporting the discharge electrode in recovery boiler ESP's. In the first method, referred to as the weighted-wire design, each electrode is individually supported and tensioned between the plates (Figure 3-61).[65] In the second method, referred to as a rigid-frame design, the electrode is attached to a rigid frame between the plates (Figure 3-62).[65] A modification of the second design is a rigid-pipe electrode system in which the corona is generated on the tip of spikes attached to a vertical pipe.

Collected particulate can be removed from the ESP in three ways. In the first method, referred to as a wet-bottom ESP, the salt cake is allowed to fall into an agitated pool of black liquor in the bottom of the ESP (Figure 3-63).[65] In the second method, referred to as a dry- or drag-bottom ESP, the salt cake is allowed to fall onto the flat bottom of the ESP shell, where a drag chain physically moves the material to a discharge screw (Figure 3-64).[65] The third method of dust removal consists of a pyramid-shaped hopper with rotary air locks and slide-gate discharges. This design is not often used in recovery boiler ESP designs because the hopper tends to plug.

To remove the particulate from the discharge electrodes and collection plates, the ESP collecting surfaces are vibrated or rapped. Rapping equipment falls into three main categories: electrical, physical, and pneumatic. The electrical rappers consist of MIGI (magnetic impulse gravity impact) rappers and vibrators. The physical rappers are rotating falling hammers, either internal or external to the ESP. The pneumatic rappers are air

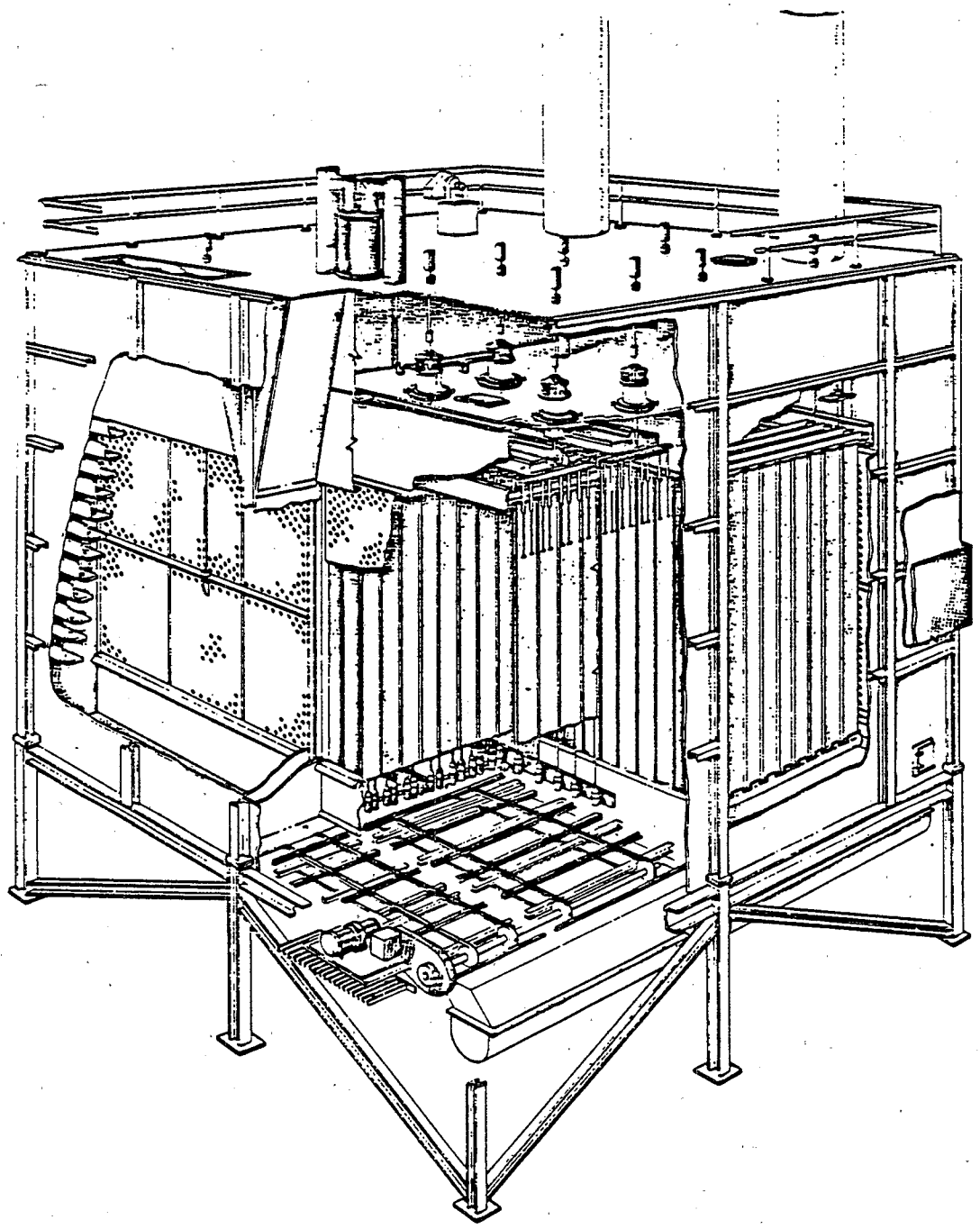

Figure 3-61. Typical weighted-wire ESP with drag bottom.[65]

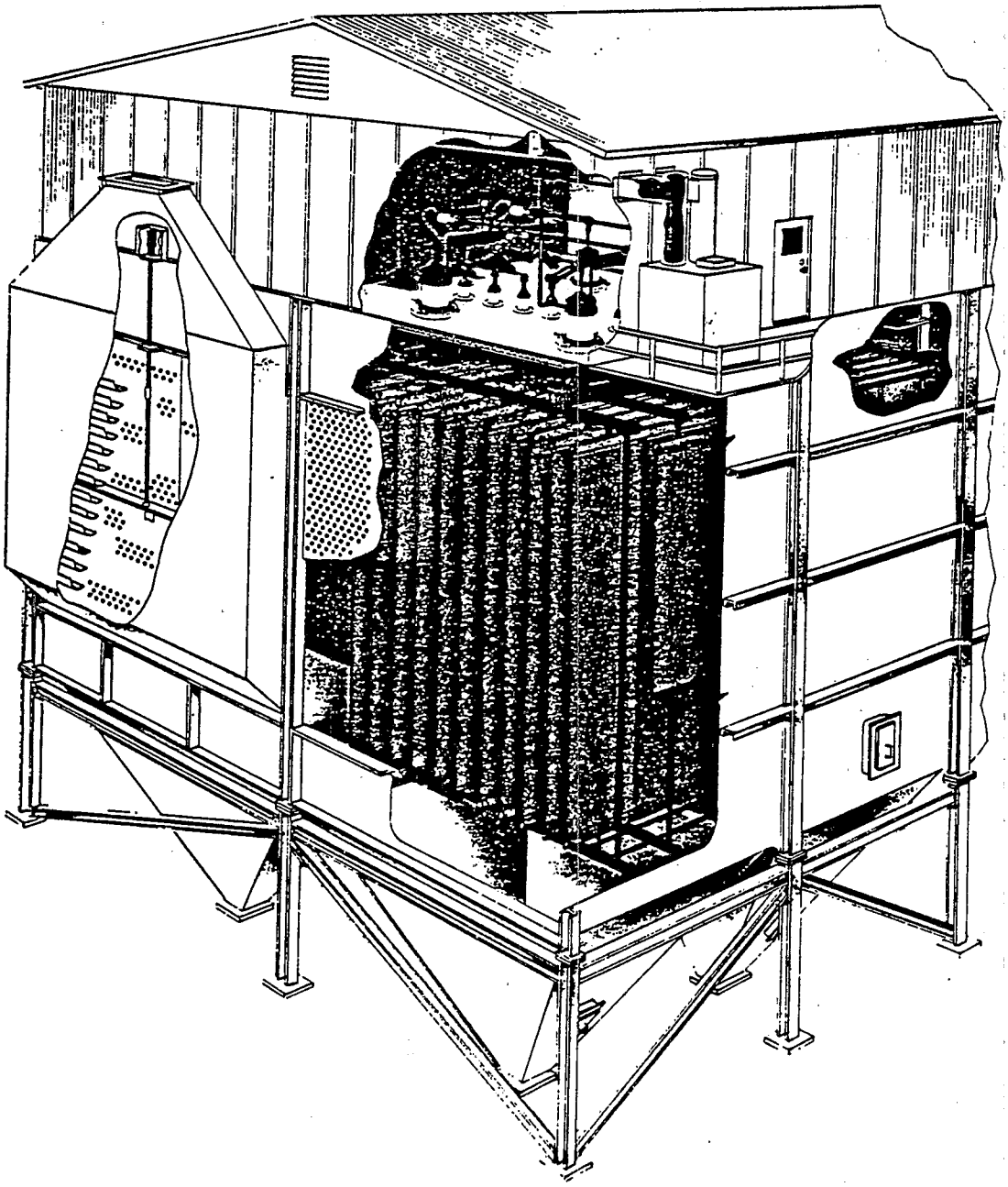

Figure 3-62. Rigid-frame design.[65]

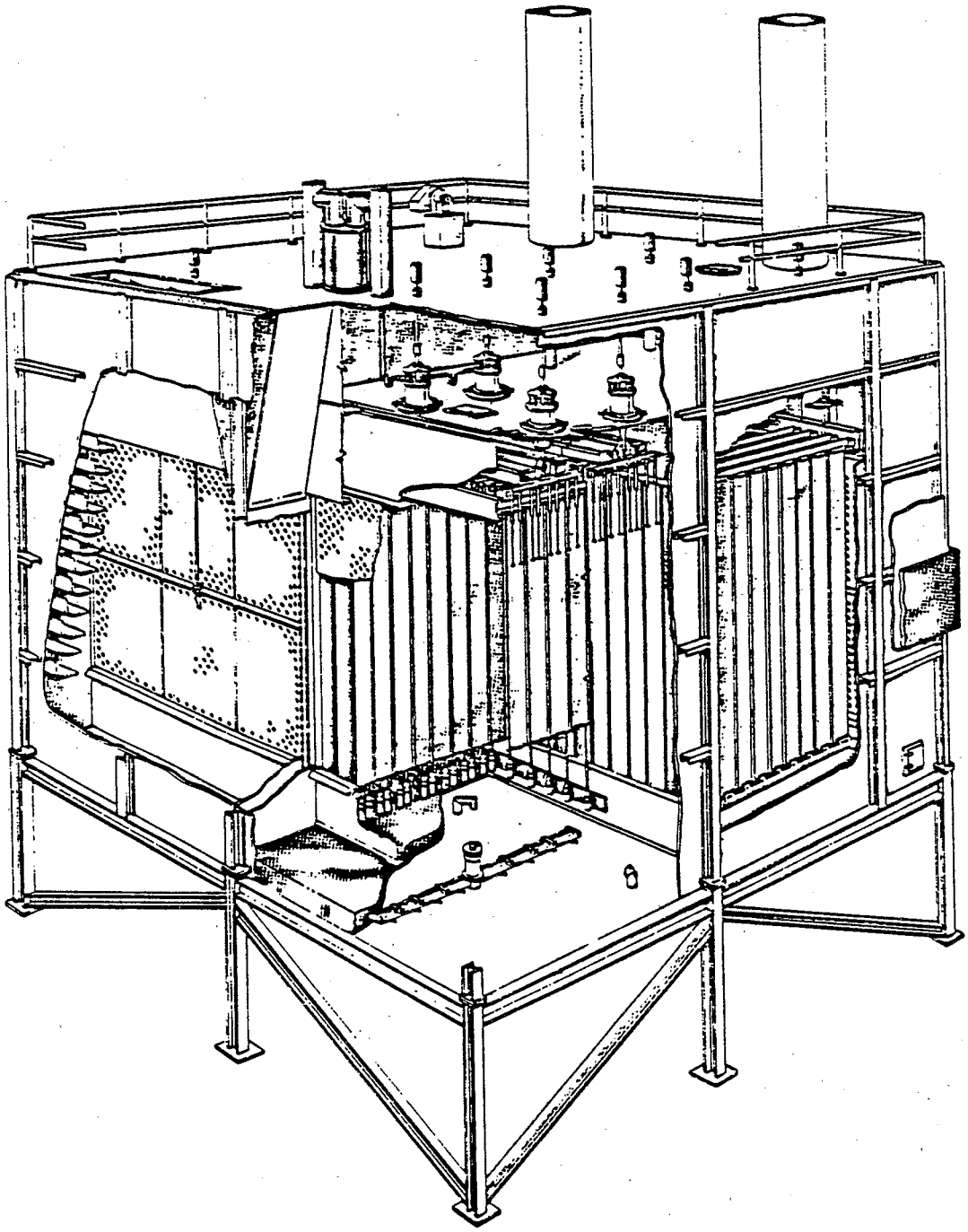

Figure 3-63. Wet-bottom ESP.[65]

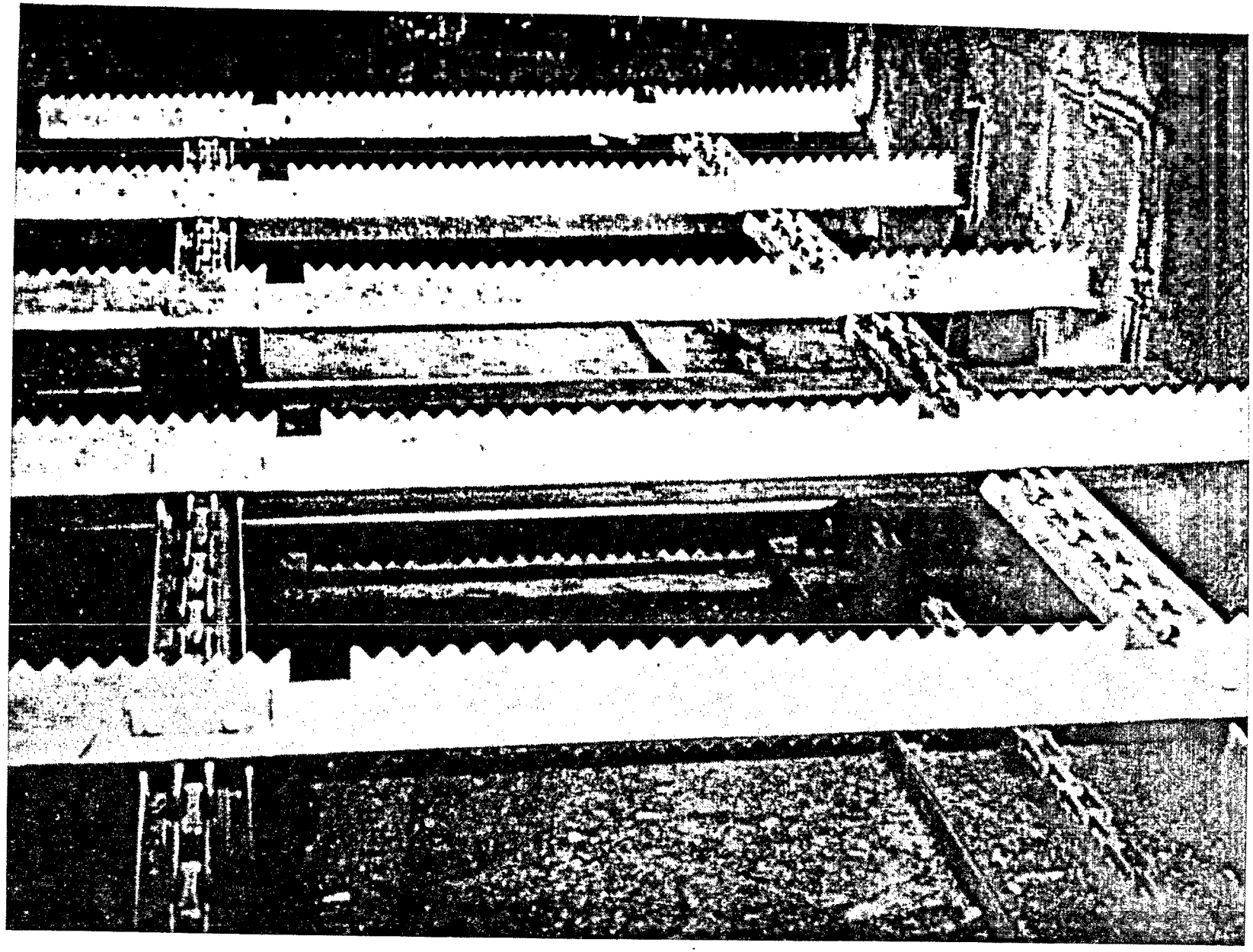

Figure 3-64. Drag chain assembly.[65]

cylinder hammers. Figure 3-65 shows a MIGI rapper, and Figure 3-66 shows a typical internal falling hammer rapper design.

Buildup on the plates results in low collection efficiency due to reduced power input to the ESP. The effect is most prevalent when the flue gas temperatures are below 300°F and a combination of high boiler excess air and ambient air inleakage is occurring.

In general, ESP control efficiency is determined by the initial design of the unit and the operating characteristics of the source. The major design factors include plate area, superficial velocity, and sectionalization of the unit and size of the T-R set. Figure 3-67 shows the relationship between design efficiency and the design specific collection area (ft^2/1000 acfm) for modern ESP's.[66] It should be noted that increasing the plate area above 400 ft^2/1000 has a diminishing effect with regard to improving performance, primarily because of the predominance of factors not related to corona power, such as hopper sneakage and rapping losses. To minimize the effects of rapping loses and to improve residence time, manufacturers have been designing the newer ESP's with lower superficial velocities. The accepted maximum velocity in current technology is about 3.5 ft/s.[67] Figure 3-68 shows the design velocity of 20 randomly selected units.

It should be noted with increased treated gas volume, an increase in gas temperature can increase the superficial velocity beyond design values and reduce the effective SCA and collection efficiency.

Instrumentation--Optimum performance of an ESP depends on effective control of the operating parameters that can vary because of changes in the physical characteristics of the ESP or the flue gas stream being treated. Recent ESP installations generally are equipped with instrumentation for monitoring and recording the major operating parameters. The operator and inspector should thoroughly understand the function of each instrument and associated records to evaluate ESP performance.

Instrumentation for a kraft pulp recovery boiler ESP generally consists of monitors for ESP power input, flue gas temperature, oxygen content, and opacity, rapper operation, and the particulate discharge system. The instruments are generally located in proximity to the ESP unit. When a plant has more than one ESP, the instrumentation for all the ESP units can be housed in a centrally located control.

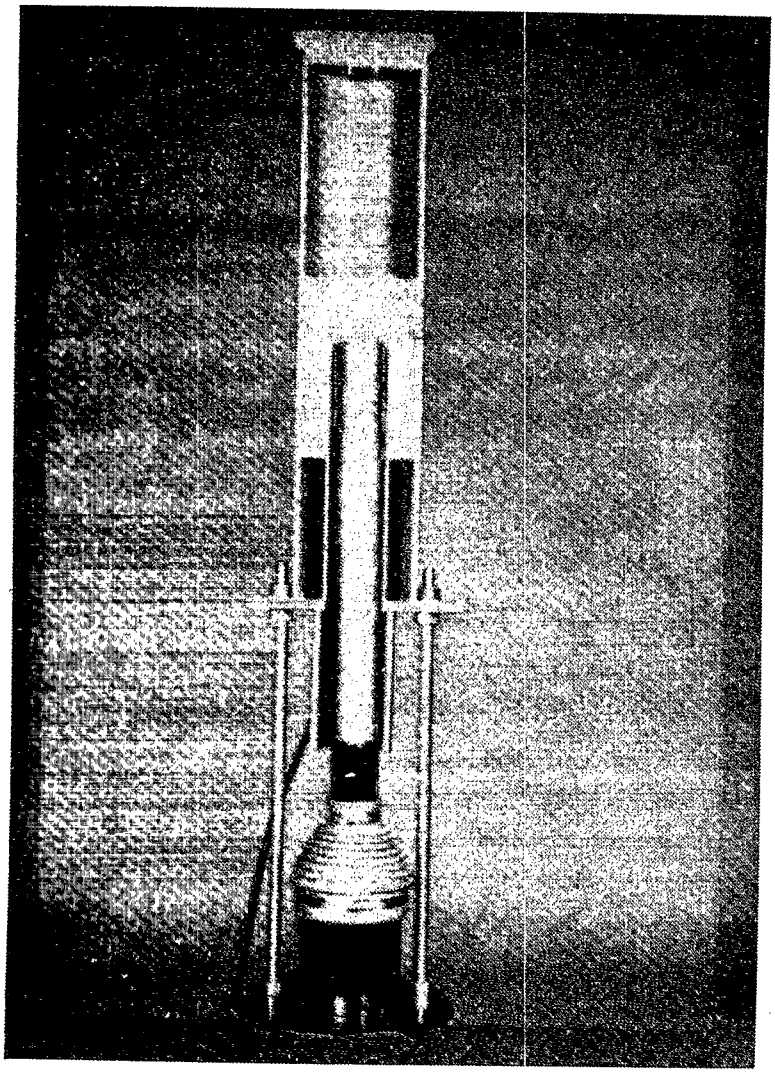

Figure 3-65. MIGI rapper cross section.[65]

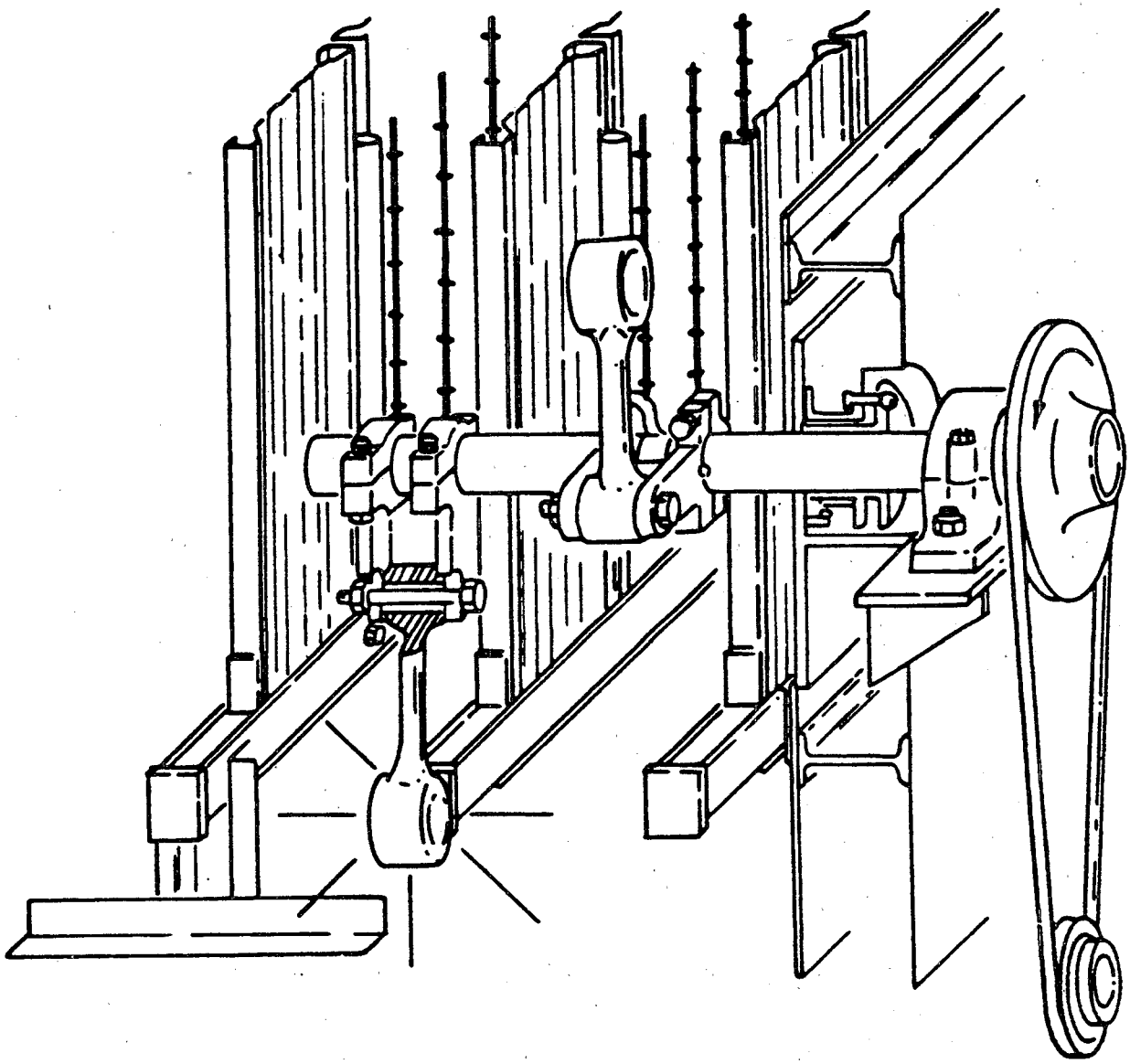

Figure 3-66. Internal falling-hammer rapper design.

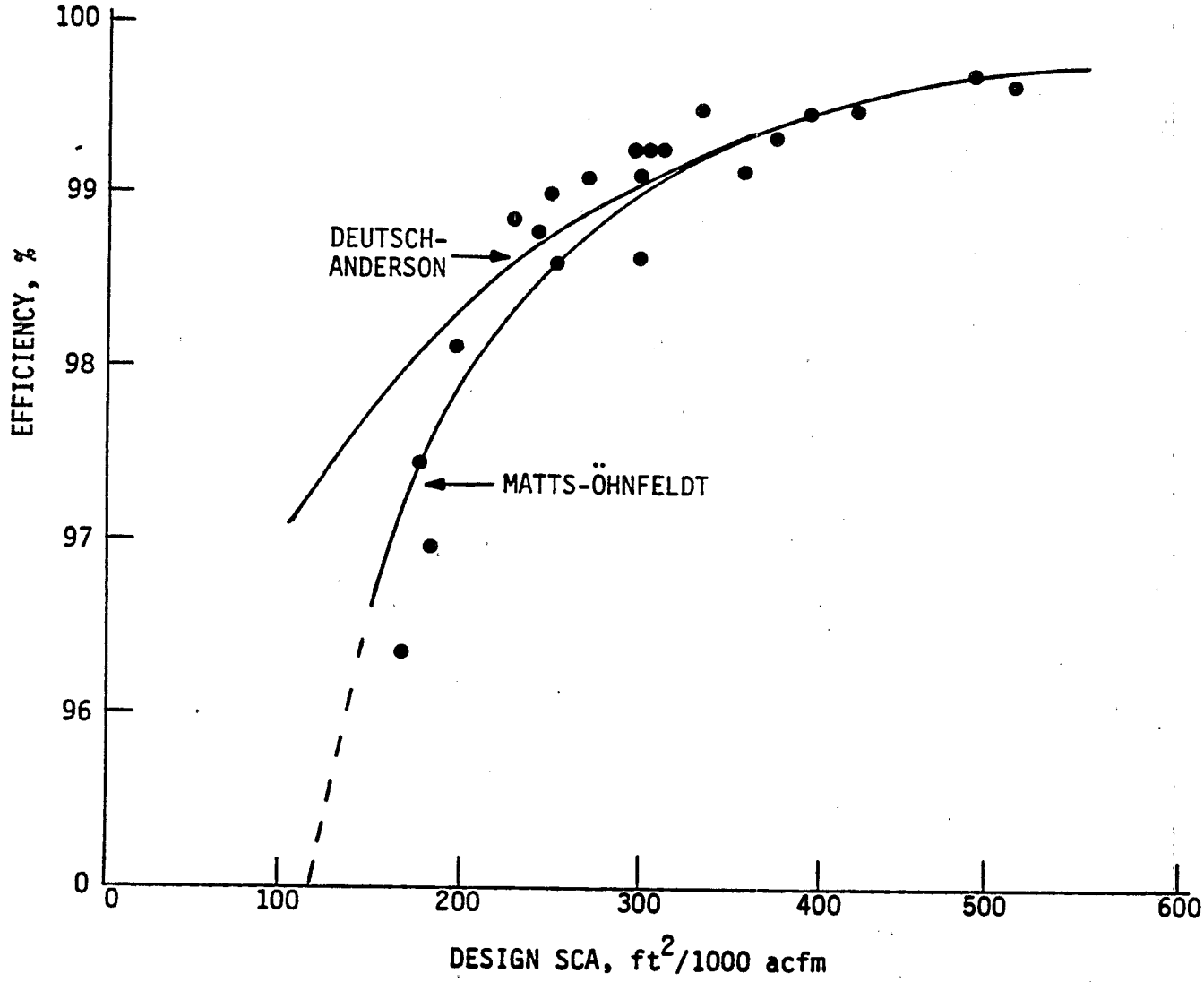

Figure 3-67. Design SCA and efficiency of 20 recovery boiler ESP's.[66]

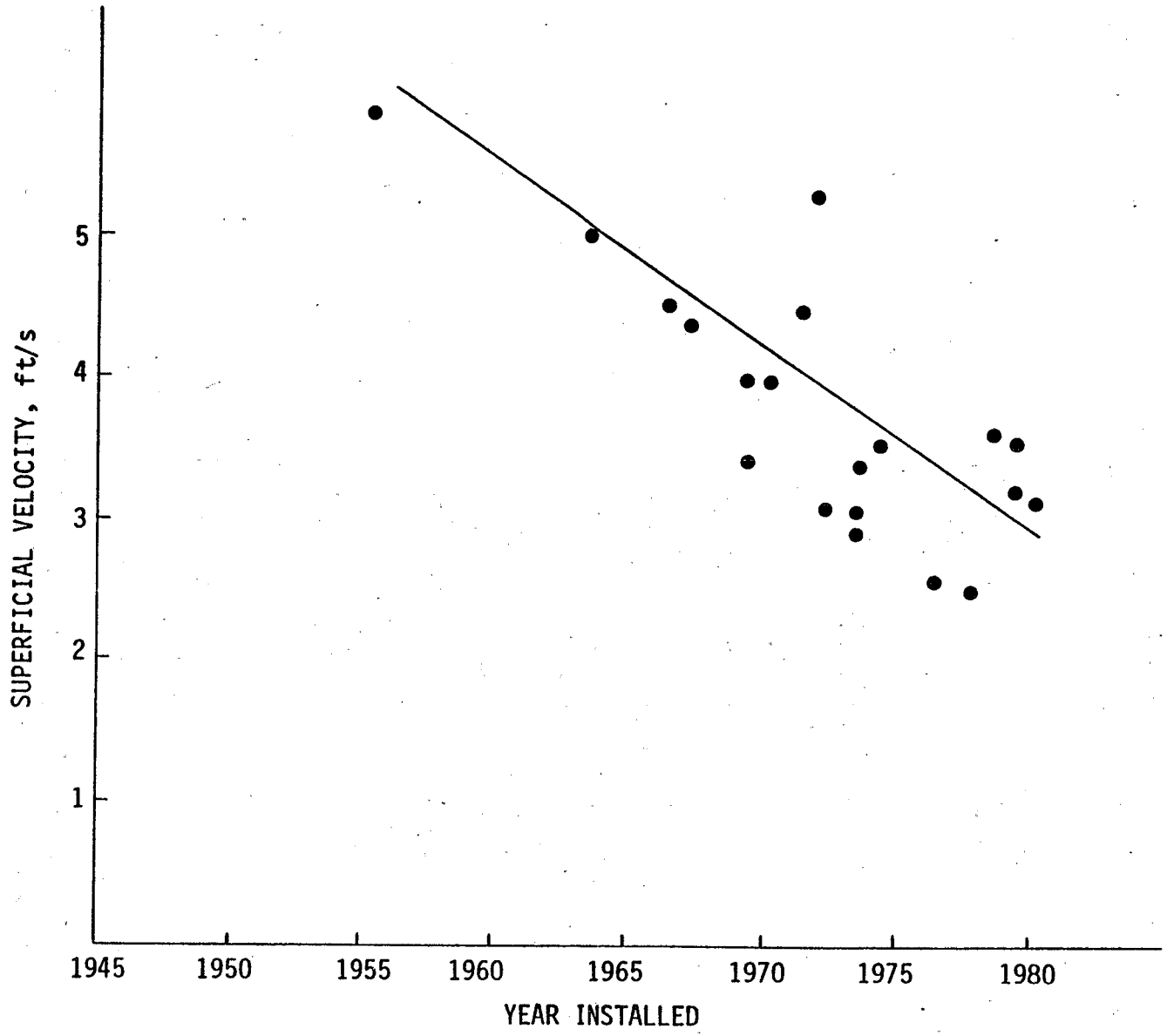

Figure 3-68. Superficial velocity versus year installed.[66]

In the ESP instrumentation block diagram shown in Figure 3-69,[62] the ESP has four T-R sets, each of which has two bus sections. Primary voltage and primary current are measured for each T-R set. Secondary voltage, secondary current, and spark rate are measured for each bus section. Figure 3-70 shows the positions of various instruments in an ESP circuit. The ESP in this figure has four primary voltmeters and four primary ammeters; the secondary-side instrumentation consists of eight secondary voltmeters, eight secondary ammeters, and eight spark rate meters.

The function of each instrument determines its relative location in the circuit. The primary ammeter, for example, is always located ahead of the transformer to indicate the current available for transformation. Temperature is measured at the ESP inlet, and opacity is measured at the outlet.

Primary-side meter readings only indicate the general condition of the ESP and cannot be used for complete diagnosis of internal conditions while the ESP is in operation. Nevertheless, an experienced operator generally can use the primary readings to indicate wire breakage, severe plate buildup, and discharge problems.

Energization power for an ESP is supplied at the primary side of the T-R set. The alternating current electrical power is normally 220 or 460 volts. The voltmeter dial for primary voltage shows a range of 0 to 480 volts. Normal operation is usually between 220 to 460 volts. A temporary deviation of ± 5 percent from the rated supply voltage is fairly common. The primary-side voltmeter is located ahead of the T-R set, but after the power control circuit, linear reactor, and feedback network. This positioning ensures measurement of the regulated voltage available at the T-R set.

The ammeter on the primary side indicates the current drawn by the T-R set. The primary ammeter is located between the T-R set and the power control circuit, linear reactor, and feedback network.

Secondary-side instrumentation indicates the power input to an individual ESP section. The secondary-side instrumentation usually consists of a voltmeter, an ammeter, and a spark rate meter for each bus section. Secondary-side meters are used to produce current/voltage relationships that characterize the internal conditions of the ESP. This allows maintenance personnel to concentrate on the most severe problem areas.

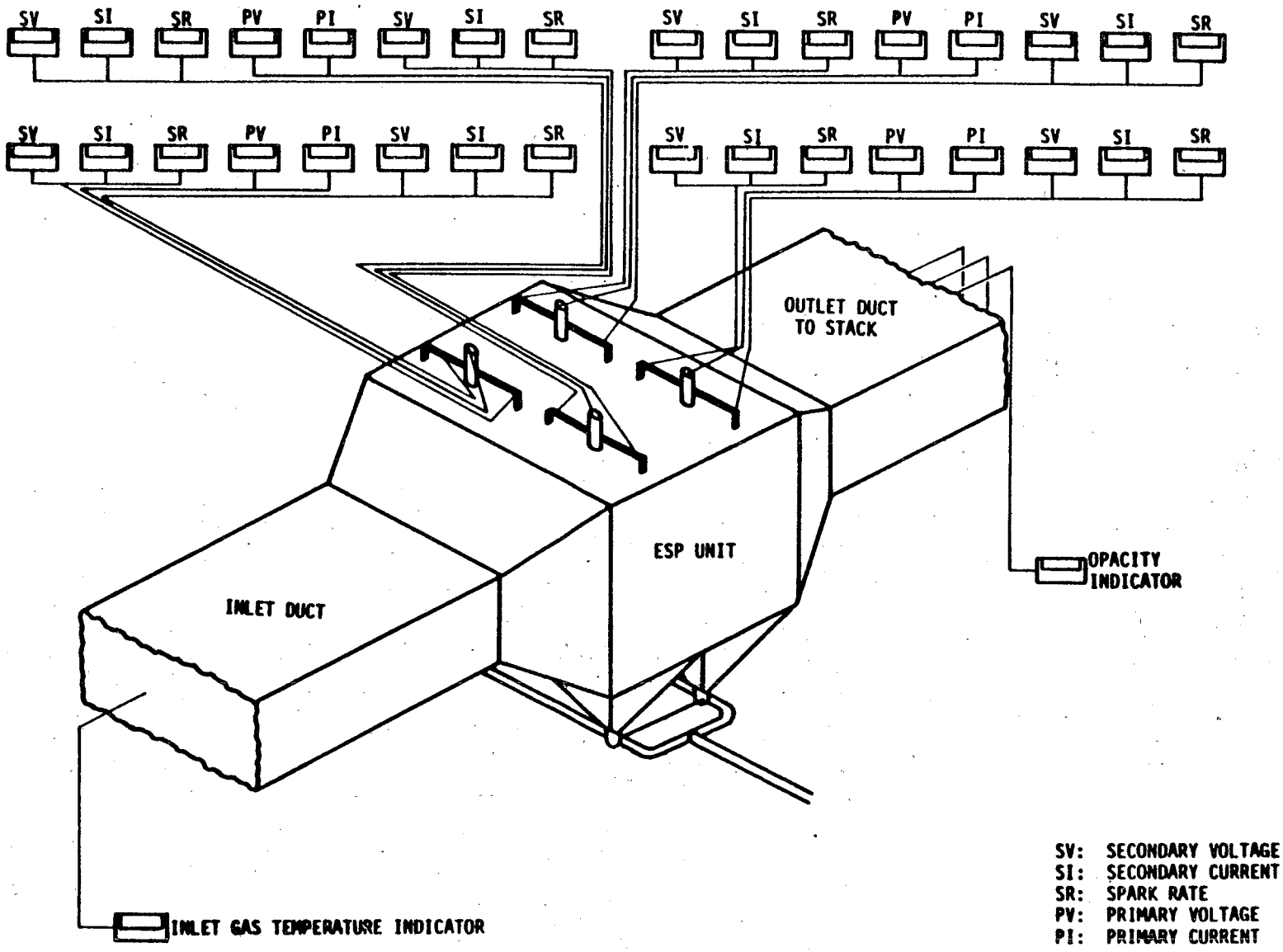

Figure 3-69. ESP instrumentation diagram.[62]

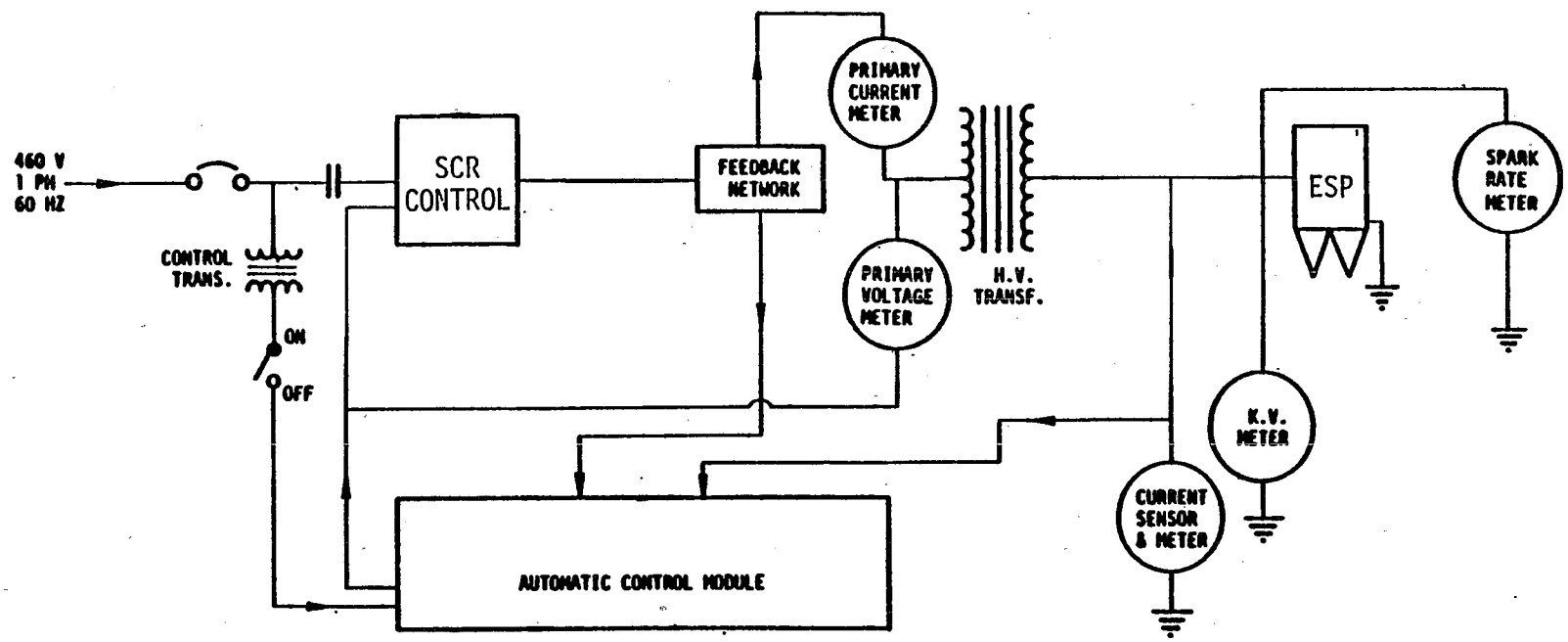

Figure 3-70. Positions of measuring instruments.[68]

Secondary voltmeters are calibrated in kilovolts to measure the high voltage of the power input to the discharge electrode. The secondary voltmeter is located between the rectifier output side and discharge electrodes to indicate the direct current voltage across the discharge electrodes.

The secondary-side ammeter indicates the current that is being supplied to the discharge electrodes in one section of the ESP. The secondary current, which is produced by stepping down the primary current in the transformer, is measured in milliamps.

The spark rate meter is a major indicator of ESP performance. The spark rate indicates the rate of sparks in a single ESP section.

Certain instruments external to the ESP are also important in the overall operation of the ESP. These include opacity monitors, oxygen monitors, inlet gas temperature indicators, and discharge system monitors.

Opacity is limited under the NSPS regulations for kraft pulp mills, and new kraft pulp mills are required to install and operate continuous opacity monitors. A correlation can be developed between opacity and mass emissions during the performance test that allows the operator to use opacity as an indicator of overall performance with respect the mass emission rate.

The level of oxygen in the flue gas is an indication of excess gas volume due to boiler excess air and air infiltration into the ductwork and the ESP. Because of the relationship between ESP performance and total gas volume, high oxygen content in the flue gas is an indication of reduced performance. The optimum levels of excess oxygen should be identified during the performance test and used as a baseline for determining when maintenance may be needed.

Temperature is usually measured at the exit of the recovery boiler. The temperature of the flue gas affects corona power and ESP efficiency; i.e., low temperatures can cause acid and moisture condensation, which lead to corrosion and eventual structural failure.

Instrumentation associated with the discharge system varies with the type of discharge system being used, i.e., wet-bottom or drag-chain. The instrumentation for wet-bottom ESP's usually consists of a float to indicate the level of the black liquor in the wet bottom and a flow meter to indicate volumetric flow. Some mills also have ammeters to indicate whether the pumps

that transport the black liquor are working properly and tachometers to indicate the revolutions per minute of the agitators.

For drag chains, the only two parameters that are usually measured are the revolutions per minute of the drag chain and the current to the motor that operates the drag chain. These instruments are basically used to tell whether the drag chain is operating properly. Too much tension on the drag chain can cause the chain to break, and too little tension can cause particulate to build up in the bottom of the ESP. If the particulate continues to build up, it can cause the chain to break. In addition, significant buildup that goes unnoticed for a period of time can eventually ground out the system.

The basic instrumentation associated with rapping is a meter to indicate the rapper has "fired." Information on the internal operation of the rapper and rapper intensity is extremely difficult to obtain without shutting down the ESP.

3.3.1.4 Boiler Malfunctions--

Malfunctions that increase emissions can be divided into two areas: 1) those that occur as a result of furnace operation, and 2) those that occur as a part of control equipment operation. Several malfunctions that result from improper boiler operating practices also may have an impact on ESP performance.

The following is a summary of the major boiler operating or design parameters and associated malfunctions that may increase emissions.

Firing Rate--The firing rate of the boiler in pounds of black liquor solids per hour defines both the heat input to the boiler and standard cubic feet of flue gas volume generated. The flue gas volume and heat input change with the chemistry and the heat content of the liquor. At defined chemistry and heat values, predictable volumes of a flue gas may be calculated. The F-factor for black liquor varies from mill to mill because of species, pulp yield, and makeup chemicals, but is reasonably constant for specific mills.[12] An increase in firing rates above design (flue gas volume) results in increased vertical gas velocity through the combustion zone of the furnace and an increase in particulate emissions due to the entrainment of black liquor droplets and char particles and increased char bed temperature.[1,53]

Particulate emissions also increase at high firing rates because of the increased volume of primary air. The release of sodium in the flue gas from the char bed increases as the flue gas volume increases as a result of favorable diffusion conditions.[54] The release of sodium is related to the temperature of the bed and is primarily the result of evaporation.[53] The rate of evaporation depends on the diffusion conditions (gas velocity) in the zone between the flue gas and the char bed.

The firing rate has a dual effect. It influences the flue gas volume treated by the ESP and the uncontrolled particulate emission rates.

Char Bed Temperature--The char bed temperature appears to have an effect on the evaporation rate of sodium to the flue gas. The amount of sodium that is distributed to the flue gas increases sharply with temperature, following a curve similar to a vapor pressure curve.[12]

The sodium evaporates from the bed as elemental sodium reacts with oxygen in the primary air zone to form Na_2O.[5] The Na_2O reacts with CO_2 to form Na_2CO_3. The amount of sodium released from the bed does not appear to be dependent on the sodium content of black liquor solids.

The temperature in the bed also determines the release of sulfur to the flue gas. The sulfur is commonly present in flue gases as S, H_2S, or SO_2. The lower temperatures favor the formation of S and H_2S. Typical char bed temperatures are 1700° to $2200^{o}F$.[54]

The sulfur that is released reacts with excess oxygen in the oxidizing zones in the furnace to form SO_2. The Na_2CO_3 reacts with the SO_2 to form Na_2SO_3 that is later oxidized to Na_2SO_4.[53,59]

It should be noted that in some designs the combustion of the char may be accomplished on the boiler wall. In these designs no char bed (profile) is maintained, and the smelt drains from the walls onto a sloped hearth for removal.

Primary Air--The primary air is required to provide complete combustion and to maintain the temperature in the char bed to prevent a condition called "blackout."

The amount of air is a compromise between maintaining sufficient combustion and reducing abnormally high vertical velocities in the furnace. The increased velocity results in an accumulation of deposits on the heating

surface of the boiler (after cooling of the gas stream and condensation of fume). This accumulation causes an increase in the particulate emissions.

The increased rate of primary air (particularly at high velocities) increases the release of sodium and sulfur from the char bed because of a favorable increase in diffusion of the vapor from the bed.[53] The increased volume also increases the combustion rate of char, which increases bed temperature. Particulate emissions increase sharply when the amount of primary air exceeds 45 percent of the total air volume.[54]

Prolonged operation at low primary air volumes can result in increased char bed height, which must be reduced by an increase in bed temperature. The most common method of reducing the bed height is to increase the primary and secondary air volumes. This can cause the smelt ratio to be altered as oxidation and temperature conditions are changed.

The increased combustion can increase the flue gas volume from the boiler to a point where it is greater than the amount calculated from the instantaneous firing rate of the boiler. For the volumes to be equal to instantaneous firing conditions, the char bed combustion rate must be at equilibrium with the amount of char deposited on the bed. When the bed is being reduced in height, the flue gas and particulate emission rates will be greater than those predicted by the black liquor firing rate.

Secondary Air--The total amount of primary and secondary air required for combustion is 110 percent of theoretical air (stoichiometric air). The normal limits are between 2 and 5 percent excess O_2.

The secondary air should be a minimum of 40 percent of the total air (maximum of 65 percent of the theoretical air).[12] In boilers with a high char bed, the secondary air has two purposes. The primary purpose is to complete combustion of CO gas released from the char bed as it moves up the furnace walls. The secondary purpose is to provide primary air in the center of the furnace to burn the char bed.

The total air volume (secondary plus primary) must be high enough to produce complete combustion, but it must also be limited to reduce the vertical velocity in the furnace and total flue gas volume.

Boiler Excess Air--The amount of boiler excess air needed for complete combustion is typically between 110 and 125 percent of theoretical air

(stoichiometric air). When the amount of excess air is above 125 percent (5% O_2 in flue gas), formation of SO_3 increases.[54,69] The SO_3 is absorbed in the particulate at low temperatures, which makes it sticky. This sticky particulate fouls heating surfaces in the economizer and reduces heat transfer rates. The deposits may result in a high draft across the economizer. The particulate also causes severe operating problems when collected on the plates of the ESP.[69] The sticky salt cake cannot be removed effectively by boiler soot blowers or removed from the ESP plates by normal rapping intensity.

Buildup on the plates causes low collection efficiency as a result of reduced power input to the unit. The effect is most prevalent when flue gas temperatures are below 300°F and a combination of high boiler excess air and ambient air inleakage is occurring.[69]

This condition can be identified in the ESP when high secondary voltage (> 50 kV) and low secondary current (< 100 mA) are observed in the inlet fields. Figure 3-71 shows a typical secondary current pattern for a unit experiencing salt cake buildup as a result of high excess air (SO_3 formation).

The formation of SO_3 and H_2SO_4 can increase considerably when a residual fuel oil with a high content of vanadium pentoxide (V_2O_5) is fired in combination with the black liquor.[70]

The firing of the boiler at high excess air has three effects: 1) increased particulate emission rates; 2) increased flue gas volume to the ESP; and 3) formation of SO_3 which reduces ESP power because of salt cake buildup on both the plates and the wires.

3.3.1.5 ESP Malfunctions--

The following is a discussion of the major operating and design parameters and associated malfunctions that have an impact on ESP performance.

Operation and maintenance (O&M) of ESP's is a broad subject involving all aspects of ESP performance. It covers all component parts and all operating conditions. In general, maintenance is considered to be the routine analysis and replacement of components parts that have failed because of age or abuse. Maintenance requirements may be increased as a result of poor operating practices or reduced through superior system design. Detailed and exhaustive maintenance practices do not, however, necessarily yield superior or exceptional ESP performance.

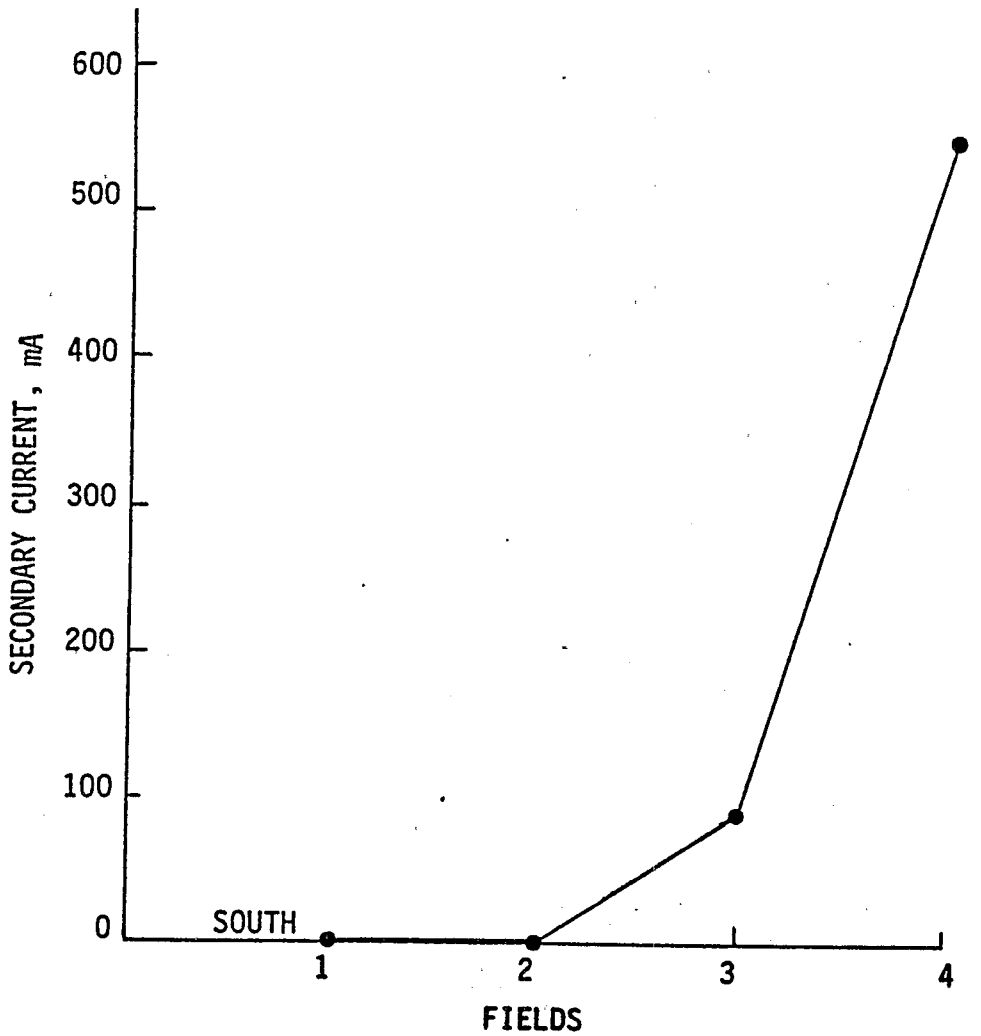

Figure 3-71. Typical secondary current pattern for unit experiencing salt cake buildup.[71]

Poor design or operating practices that cause a high level of maintenance activity are not necessarily corrected by that maintenance activity. Because the symptom is often treated, rather than the real problem, this discussion centers around good operating practices and major design problems instead of routine maintenance activities. It is imperative, however, that a good inspection and diagnostic program be used to identify problem areas and to direct corrective action. Such action may include changes in operating practices, the basic system of design, and maintenance schedules.

In general, the ESP recovery boiler system must be operated within the scope of its design variables. Deviation from the initial design for inlet temperature, inlet grain loadings, gas volume, superficial velocity, corona power, and velocity distribution can adversely affect expected performance levels. The following discussion deals with the importance of several operating parameters and the major causes of poor performance.

Gas Volume--The gas volume treated by an ESP is defined by the boiler size (heat input), excess air, temperature of the gas stream, inleakage through duct flanges and across cascades, and black liquor composition. Several of these variables, e.g., black liquor composition, are fixed over a very narrow range. The other parameters have a wider range of variability and depend on boiler operation, boiler age, or lack of maintenance.

Changes in those variables that increase the gas volume treated by the ESP decrease ESP removal efficiency. Because the cross-sectional area of the ESP is fixed, any increase in gas volume causes a corresponding increase in superficial velocity and a decrease in SCA. Performance of the ESP has been improved in recent years by increases in SCA through the use of more fields. The SCA has also been increased by increasing the cross-sectional area of the box to reduce superficial velocity. Currently, ESP's are being designed with SCA's in excess of 400 ft^2/1000 acfm and superficial velocities near 3.5 ft/s. Increasing the operating flue gas volume above the design effectively reduces the size of the ESP and reduces its performance.

The amount of flue gas generated by a pound of black liquor solids is a function of the elemental composition of the solids. The organic components are carbon, hydrogen, oxygen, and sulfur. The nonorganic or ash portion of the solids is also important because it combines with the oxygen, sulfur

dioxide, and CO_2 to form sulfates and carbonates. The major elements in the ash portion are sodium and inert oxides.

Based on a combustion analysis, an F-factor for black liquor can be developed. The F-factor (F_d) for a typical sulfate pulping black liquor is approximately 51.07 dscf/lb BLS.[72] This value assumes stoichiometric conditions and does not include inleakage or soot blowing. The amount of water vapor created by the combustion of hydrogen in the liquor can be calculated by use of the same method, and is defined as F_z. The F_z for a typical sulfate black liquor is approximately 7.99 scf/lb BLS.[72]

If the oxygen content and temperature are known, the flue gas volume can be calculated from the boiler firing rate with the appropriate corrections for the moisture in the flue gas. Moisture in the flue gas results from moisture in the fired liquor, moisture from the direct-contact evaporator, and moisture added by soot blowing.

If a more exact or plant-specific value is desired, the F-factor can be calculated from the stack test gas volume, the flue gas oxygen content, and the firing rate of black liquor solids.

Using this method, the operator, inspector, or environmental personnel can determine, on a day-to-day basis, the flue gas volume being treated by the ESP without the expense of using a Pitot tube to determine stack flue gas volume.

When flue gas oxygen increases above the normal ranges, the source of inleakage should be identified immediately, and appropriate repairs should be made to reduce the inleakage. Failure to reduce the inleakage not only results in excess emissions, but the cooling effect of the ambient air causes reduced power input, excess sparking, and corrosion.

For inspection purposes, the oxygen content of the flue gas stream can be obtained by using portable instruments and by taking multiple readings across the stack. Care must be taken to avoid inleakage stratifications that may occur along the duct walls; this value would not be representative of the major portion of the duct cross section.

Corona Power--The power used by the ESP in charging the dust particles is measured in watts and is the product of secondary voltage and secondary current. The particulate removal efficiency depends on the rate of particle

charging and on the electrical field potential in which the particle is placed. It becomes imperative that the maximum corona power be maintained in each field to achieve the desired performance.

The corona power in a recovery boiler ESP increases from inlet to outlet as dust is precipitated out of the gas stream. Most units are designed with an expected power consumption level and an expected secondary current in each field. The power consumption is expressed in watts and the T-R set is sized accordingly. Because there is a loss of energy in the transformer and in the rectification process, the secondary-side power levels do not agree with the primary-side power levels. The conversion efficiency ranges from 65 to 80 percent depending on the size and design of the T-R set and the ratio of T-R set operating point (milliamps) to T-R rating (milliamps). The conversion efficiency is highest when the T-R set rating and operating point are closely matched.[73]

The secondary current for design purposes is expressed in milliamps per foot of electrode in each field. The values generally are in the range of 0.02 mA/ft in the inlet field and increase in successive fields up to about 90 percent of the T-R set rating.

The secondary voltage applied to the electrode is maximized to provide a strong field strength (kilovolts) and is limited by electrode-to-plate clearance or T-R set rating.

The limiting level of corona power input is determined by the dust loading, gas temperature, moisture content, and wire/plate clearances. The amount of power delivered is typically expressed in terms of the physical size of the ESP (watts per square foot) and is based on the amount of flue gas being treated (watts/1000 actual cubic feet per minute). The efficiency of the unit is directly related to the power delivered to the gas stream, i.e., watts/1000 actual cubic feet per minute.

Because many studies have indicated a strong relationship between corona power and collection efficiency, it is necessary to monitor and maintain a high level of corona power. The inlet fields remove 90 percent of the particulates; therefore, maximum power levels must be maintained in the inlet fields. The optimum power distribution increases linearly from inlet to outlet.

To prevent corona power degradation due to misalignment, dust cake buildup, or T-R set failure, the boiler operator should record hourly T-R meter readings on the boiler log sheet and note any deviations from normal readings.

Typically, ESP and boiler operating conditions are not recorded during the stack test period. Without these data, a comparative baseline (watts/1000 actual cubic feet per minute) cannot be established. The comparative baseline allows an accurate evaluation of the day-to-day operation. Long-term degradation of corona power levels, which can occur because of the loss of rapper effectiveness, increases in flue gas volume, misalignment, or changes in T-R set controllers, is seldom noticed over a period of months, even though the overall efficiency may be decreasing. In most cases, immediate short-term failures such as rapper control loss, T-R set controller failure, wire breakage, drag chain failure, or insulator failure are indicated by changes in corona power levels, which can occur over a few minutes or several hours.

Daily review of corona power levels by supervisory personnel and comparison with normal values can permit a rapid and correct diagnosis of maintenance problems before they result in excess emissions or catastrophic failure of the unit.

Most recovery boiler ESP's are designed with two parallel chambers, which allows internal maintenance to be performed on one chamber while the other chamber carries the gas volume. Maintaining compliance with emission limits, however, requires that the boiler load be reduced to keep the total gas volume compatible with the reduction in collection plate area because all the gas is passing through one chamber.

In those systems that have a single T-R set per field, the T-R set is installed in a double half-wave design. The T-R set controller is typically designed to maximize power input based on secondary-side operating parameters. Power input to the unit is limited by the side with the lowest spark point (i.e., closest clearance, heaviest dust cake buildup, or a section with a cold air or oxygen stratification in a single lane). For determining if one chamber is limiting total power input, alternate T-R taps should be grounded and the power to each chamber evaluated. Major deviations in voltage

or current levels at the T-R set limit or spark point indicate clearance problems, rapper failures, or salt cake buildup on the plates.

Gas Distribution--For optimum performance of an ESP, the velocity of gas passing through each gas passage or lane must be approximately equal. According to the Industrial Gas Cleaning Institute (IGCI), the maximum deviation allowed across the ESP inlet face is ±10 percent of the mean velocity. This distribution of velocity is achieved by using inlet turning vanes and distribution plates. Figure 3-72 shows a typical perforated gas distribution plate that has moved from the vertical plane and become plugged. Erosion of the vanes and plates or pluggage of the distribution plate causes a deviation in the gas distribution. A serious deviation can reduce corona power because of stratification of the gas stream.

The gas volume to each chamber is balanced and modified by inlet and outlet dampers. Buildup on these dampers combined with pluggage of the distribution plate can cause imbalance in chamber gas volume. A Pitot tube should be used to make periodic checks of the gas volume to each chamber. Balancing of the gas volume based on damper position or static pressure drop can be very misleading.

Drag Chains--Particulate collected on the plates and wires is removed by rappers and falls to the bottom of the ESP. A drag chain assembly is used for continuous removal of the particulate cake from the bottom of the ESP via a discharge screw conveyor. Failure to remove the salt cake can result in a buildup in the electrical field and a short in the T-R set, which can cause serious permanent misalignment of the wire frame assembly.

Typical malfunctions of the drag chain system involve chain breakage, misalignment of the drags, sprocket failure, and/or motor failure. Failures of the chains and sprockets require isolation of the chamber to make the necessary internal repairs.

Two types of drag chains are used, longitudinal and lateral. The longitudinal drag-chain system moves across electrical fields in the direction of gas flow. Sneakage of the gas below the treatment zone between fields is prevented by baffles located between fields at a point above the drag chain. The baffle does not completely isolate the field, and some sneakage occurs when the drag chains are in motion. Failure of the baffles as a result of

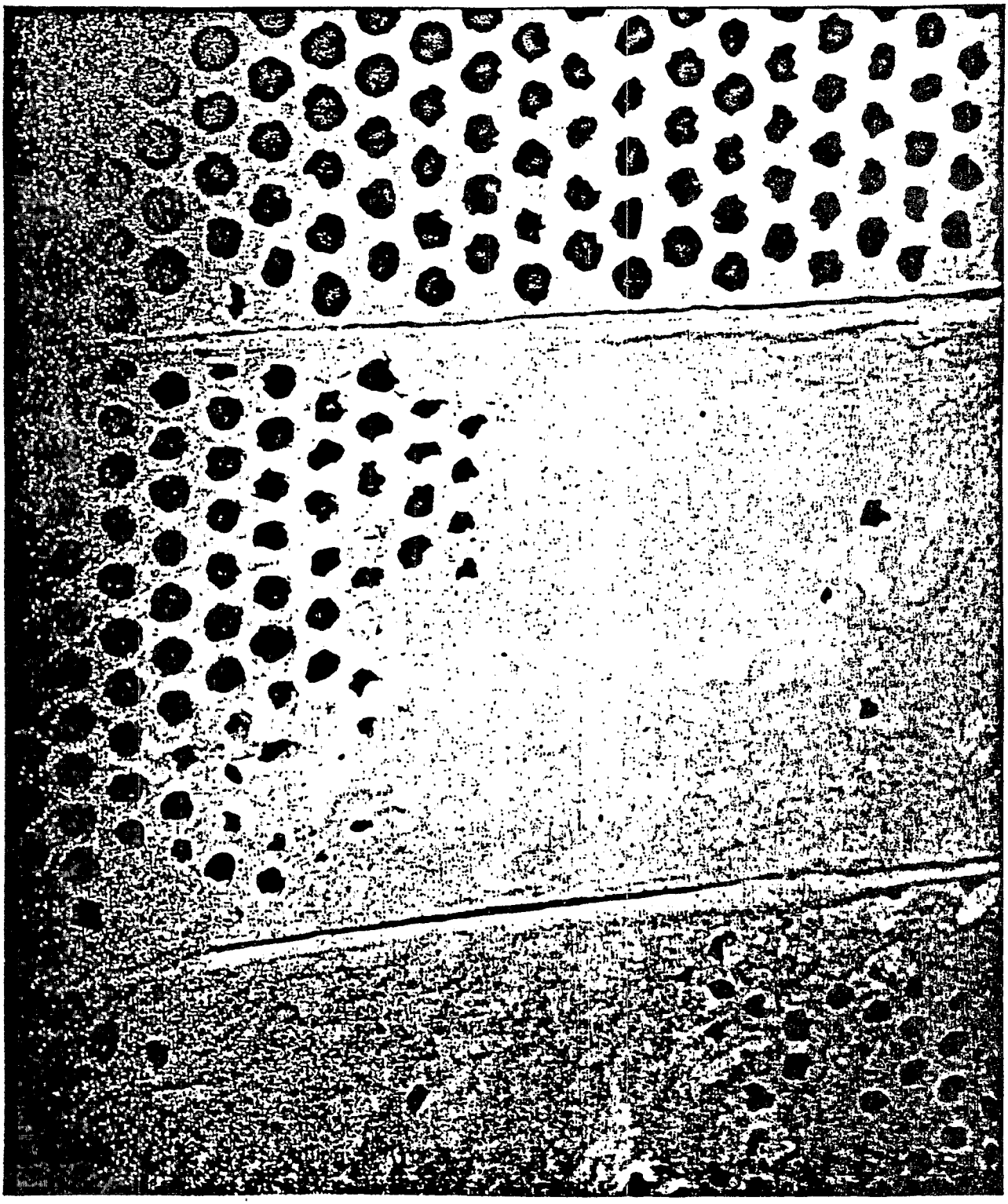

Figure 3-72. Example of a plugged distribution plate.[66]

corrosion or misalignment results in increased emissions due to sneakage below the treatment zone.

The lateral drag-chain system consists of an individual chain system in each field that moves perpendicular to the gas flow. Positive baffling is provided between each field to prevent sneakage.

Wet-Bottom ESP--In most recovery boiler ESP designs, salt cake rapped from the plates is allowed to fall into a pool of black liquor maintained in the bottom of the ESP. Agitators are used to dissolve the particulate in the liquor. The black liquor that has been concentrated in the direct- or indirect-contact evaporator is pumped into the ESP bottom, where it is enriched with the collected salt cake. The agitation is slow and a crust of salt cake is normally maintained on the liquor surface. A continuous flow of liquor is maintained in the bottom and is controlled by the boiler firing rate. The level is adjusted to maintain a positive seal under the antisneakage baffles between fields. If the agitation or mixing efficiency is poor, salt cake may build up in the corners of the bottom and possibly cause bridging and grounding of the electrical discharge system (i.e., clinker formation). Because overfilling the bottom can ground the system, the liquor level must be monitored continuously. Corrosion of the baffles between the fields and the shell wall is also a serious problem in wet-bottom ESP's.

Rappers--Rapping is required in three areas in an ESP: 1) the collection plates, 2) the discharge wires, and 3) the distribution plates.

Collected salt cake must be removed from the plates to maintain power input levels (secondary current) in each field. Rapping effectiveness depends on the salt cake properties, the temperature, and the transmittance of energy through the anvil/support system to the plates. Loose or corroded linkages dampen the vibration and result in ineffective removal of salt cake in the lower portion of the plates.

Salt cake must be removed from the wire to reduce the effective wire diameter and keep the corona initiation voltage low, which increases the field strength and the power input. Rapping of the wires is similar to plate rapping, but fewer rappers are used per field. Effective rapping is accomplished by creating a standing wave in the wire during the rapping process. As in plate rapping, efficient transmittal of rapping forces is required to

remove the collected salt cake. As a result, loose connections and corrosion must be prevented to ensure effective rapping.

Distribution plates must be rapped to remove deposits and prevent maldistribution of the gas flow. Generally, a rigid connection is made between the rapper shaft and the center of the perforated plate.

Figure 3-73 shows a typical rapper pattern on a modern ESP using external top rapping. The number of rappers per field and per chamber depends on rapper size and plate design. Usually there are more plate rappers than discharge rappers. The number of rappers is based on the plate area and the linear feet of discharge wire per field.

Plate and wire frame rapping can be accomplished by magnetic impulse gravity impact (MIGI) rappers, pneumatic cylinders, or external or internal rotating hammers.

Rapping frequency depends on dust loading and ESP design. Typically, the inlet fields are rapped more frequently than the outlet fields because more dust is collected there. Rapping intensity may be changed to remove sticky or cohesive dust. Overrapping can result in fracture of the dust cake and resulting rapper reentrainment puffs or a snowing condition.

Rapping intensity in MIGI rappers can be changed by increasing the voltage to the integral DC coil (increasing lift) or by changing the weight of the piston. Generally, the piston weight is 20 pounds, and the lift height can be adjusted to yield an impact of between 6 and 20 ft/lb. The amount of plate area per rapper is defined by the design.

Typical failures of MIGI rappers occur as a result of coil failure (i.e., open coil).

Pneumatic impulse rappers are double-action air cylinders with integral pistons. At a set pressure, the frequency and impact force of the rapper are defined. Various kinds of rapper failures can cause the piston to freeze. The most common failure results from water in the compressed air lines. Water causes sludge or rust, which restricts the piston motion. Condensation as a result of air compression must be removed through the use of traps, dehydration units, or desiccant units. Failure to install or maintain drying equipment is the main cause of pneumatic rapper failure.

Failure of rappers can also occur as a natural result of piston seal wear. A normal preventive maintenance program of replacing seals can minimize this method of failure.

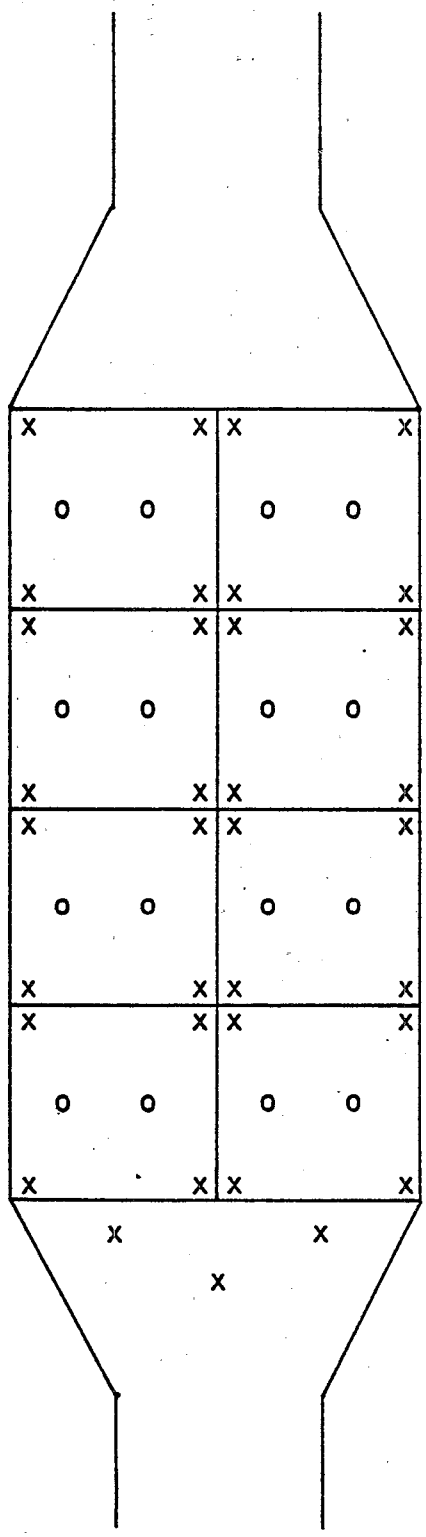

Figure 3-73. Typical rapper layout on a modern two-chamber precipitator.

Pneumatic rappers are activated by opening an air valve for a preset period of time. The valve is opened by an electrically activated solenoid. Although solenoid failure is infrequent, it can cause rapper failure.

Vibrators consist of two plates separated by an air gap. The upper plate is attached to an electric coil. Passage of an alternating current through the coil creates a strong magnetic field in the upper plate, which causes the plates to come together with great force. Upon impact, the electric circuit is broken and the gap is opened through the use of compression springs. The rapid closing and opening of the circuit results in a high-frequency vibration in the rapper body, which is attached to the rapper rod. Rapping intensity can be increased by changing the voltage to the vibrators. Failure of the rapper occurs as a result of spring failure, a coil short, or a change in air gap setting.

Falling-hammer rappers consist of a number of swinging hammers attached to a rotating shaft. As the shaft rotates, the hammer is brought into an elevated position, from which it falls in an arc and strikes an anvil attached to a number of plates or wire frames. The force applied to the anvil is determined by the weight of the hammer, which can be changed by increasing the mass. The frequency of the strike is determined by the rotation rate of the hammer shaft. Rapper failures occur as a result of hammer/anvil misalignment, hammer fracture, hammer/shaft connection failure, and shaft chain-drive failure. The frequency, duration, and pattern of rapper activation are determined by either electrical or mechanical control systems.

One mechanical control system consists of a synchronous motor with an electrical contact on the edge of a wheel. Electrical contacts located along the perimeter of the wheel are attached to individual rappers. The pattern of rapping can be changed by adjusting the location of the leads. The total time between rapping cycles can be adjusted by changing the wheel rotation rate. Failure of the control system can occur if the contacts become loose, burnt, or misaligned.

A second type of mechanical rapper control system consists of individual contacts for each rapper, which are activated by a cam. A number of cam/switches are attached to a shaft with the cam lobes offset. Rotation of the cam shaft results in a preset rapper frequency and pattern. The cycle time can be changed by changing the rotation rate. System failures result from

burning of cam switch contacts, cam breakage and wear, and synchronous motor failure.

Several types of solid-state rapper control systems are in use. Most of these systems allow changes in frequency, intensity, duration, and pattern of individual rappers or group of rappers. Failures of these rapper controls result from thermal decomposition of solid-state components (resistors, transistors, diodes, transformers, etc.), loose wires and contacts, and failure of breakers.

Insulators--Insulators are used to isolate the high-voltage distribution system from the ESP shell. Cracking of the insulator as a result of moisture or electrical tracking can cause a loss of a field (T-R section).

Tracking occurs when dust or moisture accumulates on the insulator surface. The deposit provides a conductive layer through which the high voltage may pass to the ground. The circuit created generates heat on the surface of the insulator that may eventually result in insulator cracking. Depending on its location, insulator failure can cause a short that trips out a T-R set.

Insulator tracking may be identified through use of an air load or gas load test. A typical pattern generated by insulator tracking is shown in Figure 3-74.[74]

Clearance Between Plates and Wires--The clearance between plates and wires must be maintained at the design tolerances to prevent premature sparking and to allow maximum power input. Reduction in clearance can occur if the upper or lower wire frame is not aligned with the plates. The alignment is changed by adjusting the standoff insulator position. Clearance problems in wire frame designs can occur as a result of warpage of the wire frame or misalignment of the wire frame alignment system.

Plate-to-wire clearance can also be reduced as a result of plate warpage. Minor warpage problems can be solved by physical straightening. Severe clearance problems can be corrected by removal of wires in the area of the warpage. Care must be taken to minimize the removal of wires within a single passage or lane.

Plate warpage can be caused by corrosion, unequal heating during startup, fire in the ESP, or air inleakage. Severe uncorrectable plate warpage that limits corona power input may require replating of the unit.

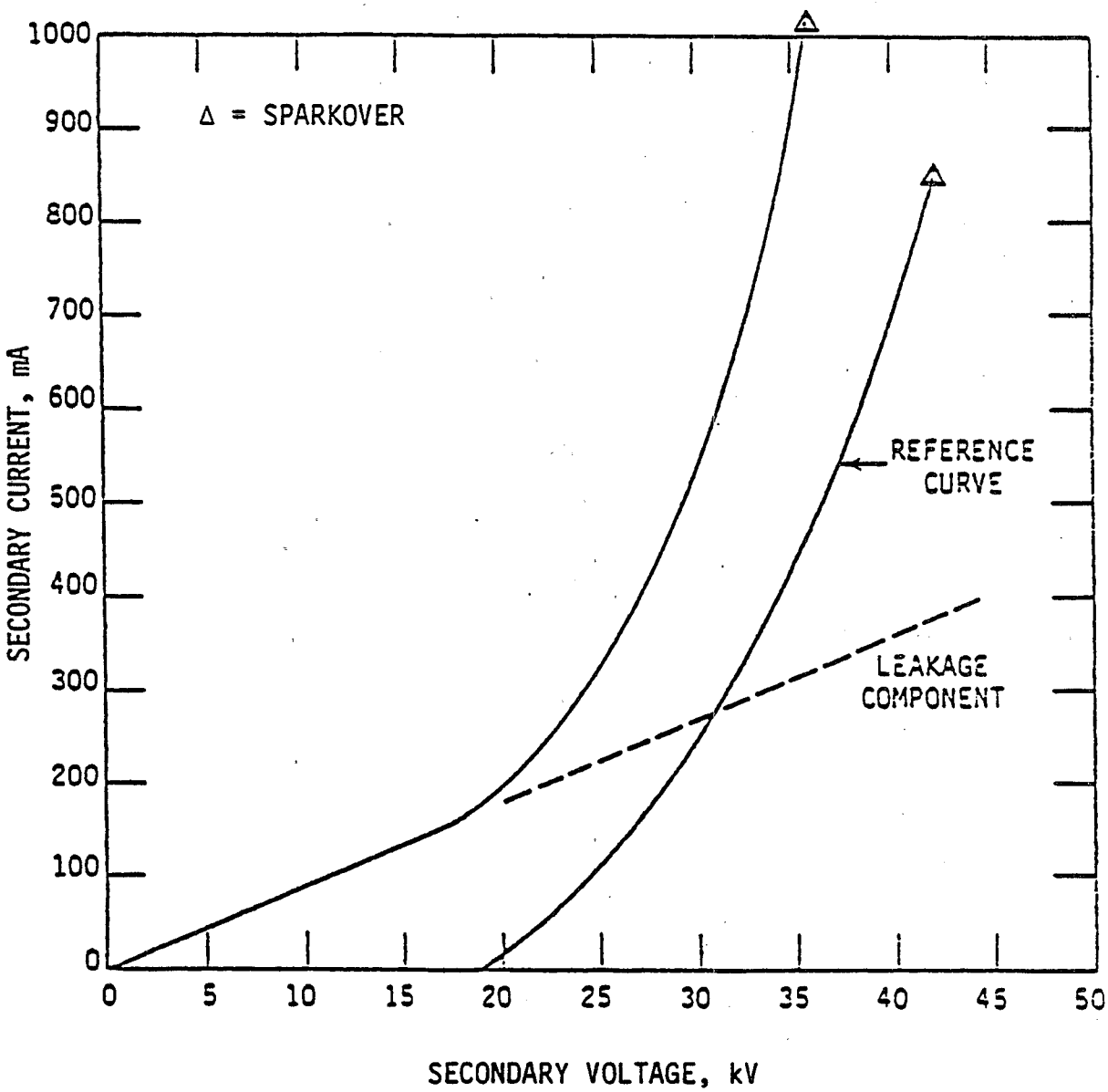

Figure 3-74. Typical pattern generated by insulator tracking.[74]

Corrosion--Corrosion appears to be the most serious maintenance problem in the long-term operation of recovery boiler ESP's. Corrosion attacks the ESP shell and internal components. Advanced corrosion is accelerated by air inleakage through corroding areas in the ductwork, around access doors, or in areas near the liquor-flue gas interface in wet-bottom units. Corrosion in internal areas causes a reduction in the removal of collected particulate from plates and wires because rapper effectiveness is severely impaired. A survey by the Technical Association of the Pulp and Paper Industry (TAPPI) of 19 noncontact recovery boilers installed between 1974 and 1979 indicated that 63 percent had some corrosion problems and 26 percent had severe corrosion problems.[75] Based on the operating conditions of the 19 boilers, the average temperature of those with serious corrosion problems was 361°F. The average temperature of those reporting no corrosion problems was 384°F. Figure 3-75 shows an example of severe corrosion of collection plates in an ESP.

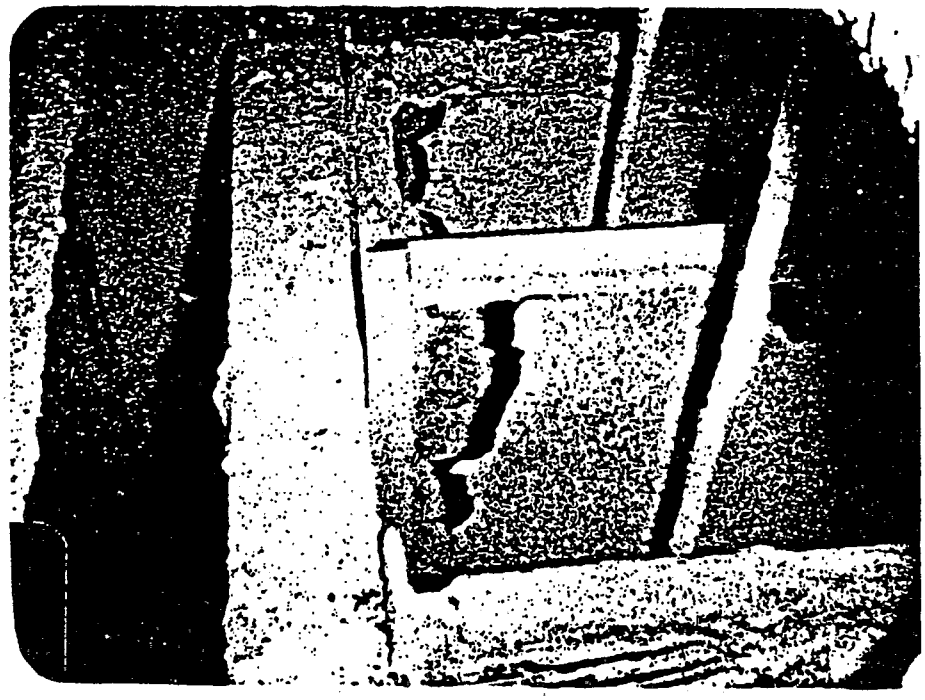

Figure 3-75. Example of severe corrosion of collection plates.

Corrosion in a mild steel component has the appearance of multiple, thin metal layers separated by areas of bright orange granular material. As oxidation occurs, the metal expands greatly in volume. The loss of a few thousandths of an inch may expand to 1/2 inch as a result of crystal growth and restructuring. This expansion, when in a confined area such as between plate mounting brackets or structural components, can cause a great deal of stress and force components apart.

Corrosion occurs at a faster rate in the colder areas of the ESP. Localized cooling occurs when heat loss through the shell is highest, i.e., where outside stiffeners or structural columns are attached to the shell.

The primary corrosive agent in kraft recovery boiler ESP's is sulfuric acid. Flue gases from the boiler contain H_2O vapor with a high concentration of SO_3. A portion of the SO_2 is converted to SO_3 in the boiler.[76] At temperatures below 415°F, 99 percent of the SO_3 vapor combines with the water present to form sulfuric acid vapor (H_2SO_4). As the temperature of the gas stream is reduced, the H_2SO_4 vapor becomes saturated and forms an acid mist.[76]

The temperature at which the sulfuric acid mist condenses on a cool surface is defined as the acid dewpoint. The dewpoint actually is the beginning of the saturation process, and the exact acid dewpoint temperature cannot be determined.[76] The rate of condensation reaches a maximum at 40° to 60°F below the theoretical dewpoint.

Severe corrosion occurs when water condenses on surfaces and dilute acidic solutions are formed. The rate of corrosion is aggravated by air inleakage.[77]

The dewpoint temperature of uncombined water is different from the acid dewpoint. The typical water dewpoint in recovery boiler flue gas streams is 165°F, which must be avoided.

The most severe corrosion in wet-bottom ESP's occurs in the area above the liquid level and below the treatment zone. This area is baffled and is not a part of the main gas volume passing through the ESP. Vapors from the black liquor in the bottom are extremely corrosive. The activity of the vapors increases with high oxygen and sodium sulfide concentrations.[78] Also, water vapor raises the local dewpoint temperature. The temperature of the black liquor, which is normally below 180°F, results in a cool shell temperature surrounding the liquor. This cool shell temperature causes a gradual

decrease in shell temperature between the treatment zone and liquor level. The lower wall temperature is usually below the acid dewpoint and near the moisture dewpoint.

Maintenance of a uniformly high temperature in the ESP is important in reducing the rate of corrosion. The temperature may be increased by reducing air inleakage, insulating the shell, and heating the shell.

The temperature within the ESP is not uniform, and variations in the shell occur as a result of contact with structural members, degree of insulation, exposure, and orientation. Areas of low gas circulation in the ESP typically have the lowest temperature and highest rate of corrosion.

In general, a well-constructed, well-insulated steel shell ESP will experience minimum corrosion at flue gas temperatures above 350°F. Units with a flue gas temperature between 243°F and 265°F have problems in the areas of highest heat loss. Units with temperatures below 300°F require supplemental heating.

The amount of heating required varies with flue gas temperature, degree of insulation, and other environmental factors such as wind loss and degree of exposure. The heat requirements are generally 500,000 Btu/h.[79]

Table 3-22 summarizes the parameters and potential malfunctions that affect emission rates. As noted in the table, many parameters are interrelated and may have more than one effect. For this reason, the inspector should be able to confirm as many operating parameters as possible during the performance tests to define deviations from normal operation or practice.

3.3.1.6 Inspection of Recovery Boiler--

This subsection summarizes the activities associated with the inspection of kraft recovery boilers and ESP's. It also identifies the kinds of data that should be collected during an inspection and the procedures that should be used to evaluate these data.

Both plant personnel and regulatory agencies make inspections of process and control equipment. Although the thoroughness and scope of these inspections may be vastly different, they have a common goal--to determine the compliance of the source with applicable State and Federal emission limits contained in the SIP and the NSPS.

To achieve the stated goal of determining the compliance status of the source, the inspection must be well planned, and sufficient time must be

TABLE 3-22. SUMMARY OF THE EFFECTS OF KEY RECOVERY BOILER OPERATING PARAMETERS

Parameter	Factor influenced	Effect
Firing rate	Flue gas volume	Changes ESP efficiency
	Vertical velocity in combustion zone	Changes uncontrolled inlet grain loading
	Primary air volume	Changes diffusion conditions and affects rate of evaporation of sodium from smelt
Char bed temperature	Sodium and sulfur vapor pressure	Changes uncontrolled particulate grain loading
	SO_2 content of flue gas	Changes composition of dust cake
Primary air	Flue gas volume	Changes ESP efficiency
	Vertical velocity in combustion zone	Changes uncontrolled particulate emission rate
	Sodium and sulfur evaporation rate due to temperature and diffusion conditions	Changes uncontrolled particulate emission rate
	Char bed temperature	Changes uncontrolled particulate emission rate
Char bed height	Rate of primary air	Changes uncontrolled particulate emission rate and flue gas volume to ESP
Secondary air	Vertical velocity in combustion zone	Changes uncontrolled particulate emission rate
	Excess air	Increases flue gas volume
Excess air	Vertical velocity in combustion zone	Changes uncontrolled particulate emission rate
	Flue gas volume	Changes ESP efficiency
	Increased SO_3 formation	Changes particulate composition; reduces ESP power input and efficiency
Firing residual oil containing high sulfur	Increased SO_3 formation	Changes particulate composition; reduces ESP power input and efficiency

(continued)

TABLE 3-22 (continued)

Parameter	Factor influenced	Effect
Primary temperature	Smelt bed temperature	Changes uncontrolled particulate emission rate
		Changes TRS emission rate
Black liquor chloride content	Smelt bed elemental equilibrium	Changes uncontrolled particulate emission rate
Black liquor heat value	Flue gas volume	Changes uncontrolled particulate rate
	Char bed temperature	Changes ESP efficiency
Sodium-sulfur ratio	Smelt bed elemental equilibrium	Changes uncontrolled particulate rate
Flue gas volume	Superficial velocity	Changes ESP efficiency
	Specific current density	
Corona power	Specific corona density (W/1000 acfm)	Changes ESP efficiency
Corona initiation voltage	Buildup of dust on electrodes	Changes ESP efficiency
Corona power distribution within chamber	Buildup of dust on electrodes	Changes ESP efficiency
	Plate alignment	
Corona power per chamber	Buildup of dust on electrodes	Changes ESP efficiency
	Plate alignment	
Superficial velocity	Dust reentrainment during rapping	Changes ESP efficiency
	Increased total gas volume	
Flue gas oxygen at ESP inlet	Flue gas volume	Changes ESP efficiency
	Increased SO_3 formation	Changes dust properties and increases plate deposits; reduces ESP power and efficiency
	Flue gas temperature	Increases sparking, which reduces power and efficiency

(continued)

TABLE 3-22 (continued)

Parameter	Factor influenced	Effect
Flue gas temperature	Acid dewpoint Moisture dewpoint	Corrosion Structural failure Increases air inleakage Reduces corona power Reduces ESP efficiency

provided to acquire the necessary data on boiler and ESP operating conditions. This section outlines the overall scope of the inspection and the procedures the inspector may use to determine the compliance status of the kraft recovery boiler with the particulate emission limits defined by applicable State or Federal regulations. The approach the inspector should take is to identify those operating conditions or variables that indicate operation outside the accepted norms for a particular boiler/ESP system. Normal values or conditions are established during the initial performance stack test or are based on the accepted state-of-the-art. This approach, which is generally referred to as a "baseline approach" to source evaluation, may be used by both source personnel and regulatory agencies to initiate a more detailed analysis or to trigger a performance stack test to verify compliance with the emission standard.

The early identification of operation and maintenance (O&M) problems reduces the extent and the occurrence of excess emissions and allows the plant to schedule outages or make on-line adjustments to maintain production and operate within the prescribed emission limits.

Most inspectors make visible emission observations in accordance with EPA Method 9 and record the production rate of the boiler. This level of inspection is usually not adequate for determining compliance or evaluating the maintenance procedures of a recovery boiler. The inspector must visually inspect the ESP and record pertinent operating variables for both the boiler and the ESP. Key parameters also must be measured to allow the inspector to determine if the ESP is being operated within design limits and if there is sufficient reason to require documentation of compliance through a stack test.

The following is a summary of specific things that should be checked during the inspection.

Opacity--The inspector should conduct an EPA Method 9 observation of the recovery boiler plume, either at a point just before steam condensation (in the case of a detached water vapor plume) or just after steam dissipation (if the plume is attached). The readings should be made at 15-second intervals and averaged over a 6-minute period. The total evaluation time should be at least 30 minutes and preferably over one ESP rapper cycle (outlet field rappers). The 6-minute averages should be plotted to identify any cyclic pattern. An example of such a pattern is shown in Figure 3-76.

Transmissometer Data--In units equipped with opacity monitors, the inspector should record the current 6-minute average opacity and review the previous 4 hours of monitor output to determine if a cyclic pattern is occurring. To ensure that the output values are accurate, the inspector should request the plant to place the monitor in the calibration mode with respect to zero and span. As part of the initial monitor certification, the inspector should have data available on the recorder scale factors and effective stack diameter. Average opacity readings from the Method 9 observation should be compared with average transmissometer readings for identical periods. A major deviation between the values may indicate possible monitor error. It should be noted that the manual and instrument methods are not equivalent. In sources that have real-time monitor output, instantaneous opacity spikes (rapper reentrainment) will generally be included in the 6-minute average and the value will generally be higher than that obtained by the manual method. The inspector should note the frequency and magnitude of rapper spikes and determine if a pattern is occurring (inlet to outlet field rapper pattern). The opacity and rapper reentrainment pattern in each chamber should be evaluated if separate monitors are installed in each duct. Figure 3-77 shows a typical monitor output with severe rapping reentrainment losses. The opacity should be compared with a typical baseline value for the boiler during known emission periods (i.e., performance tests). The opacity data should be used to evaluate conditions in the ESP.

Serious deviations in opacity between chambers can indicate gas flow maldistribution, an increase in penetration through one chamber as a result of rapper failure, inleakage, or low power input.

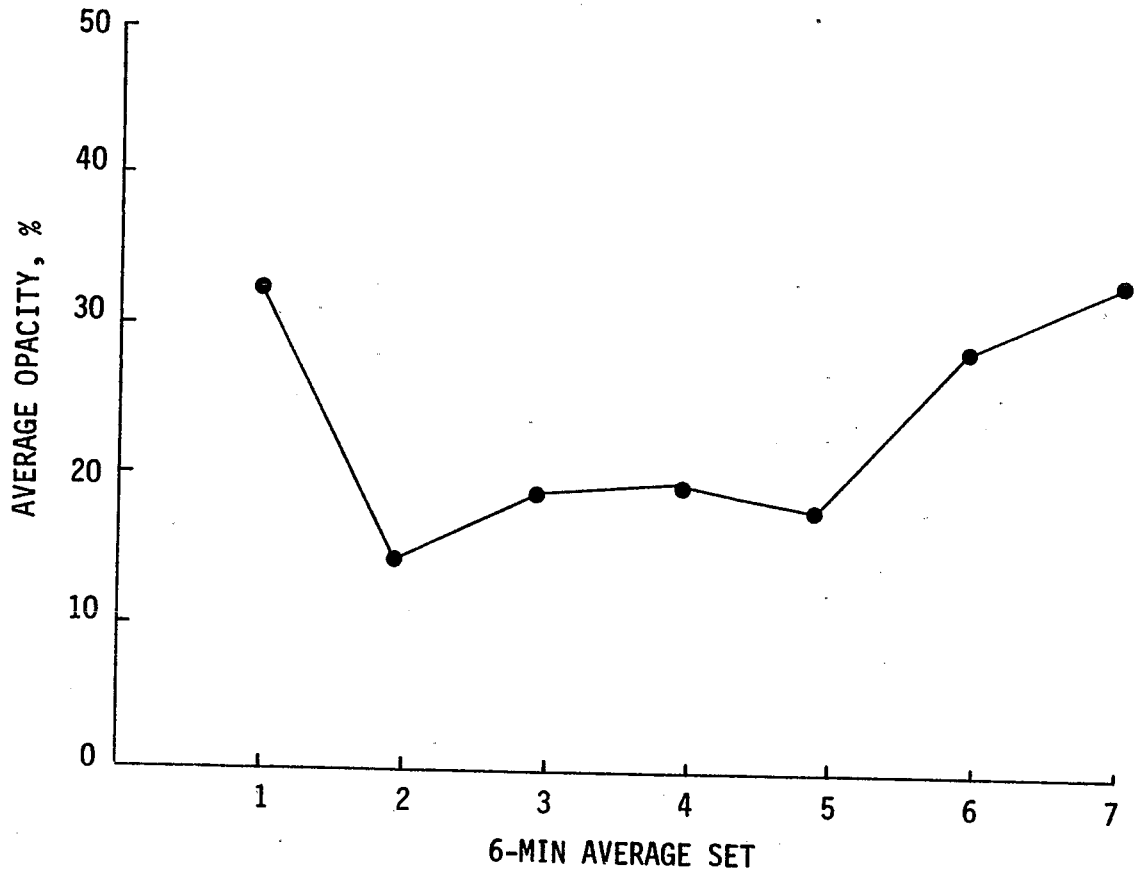

Figure 3-76. Example of 6-minute average opacity pattern.[80]

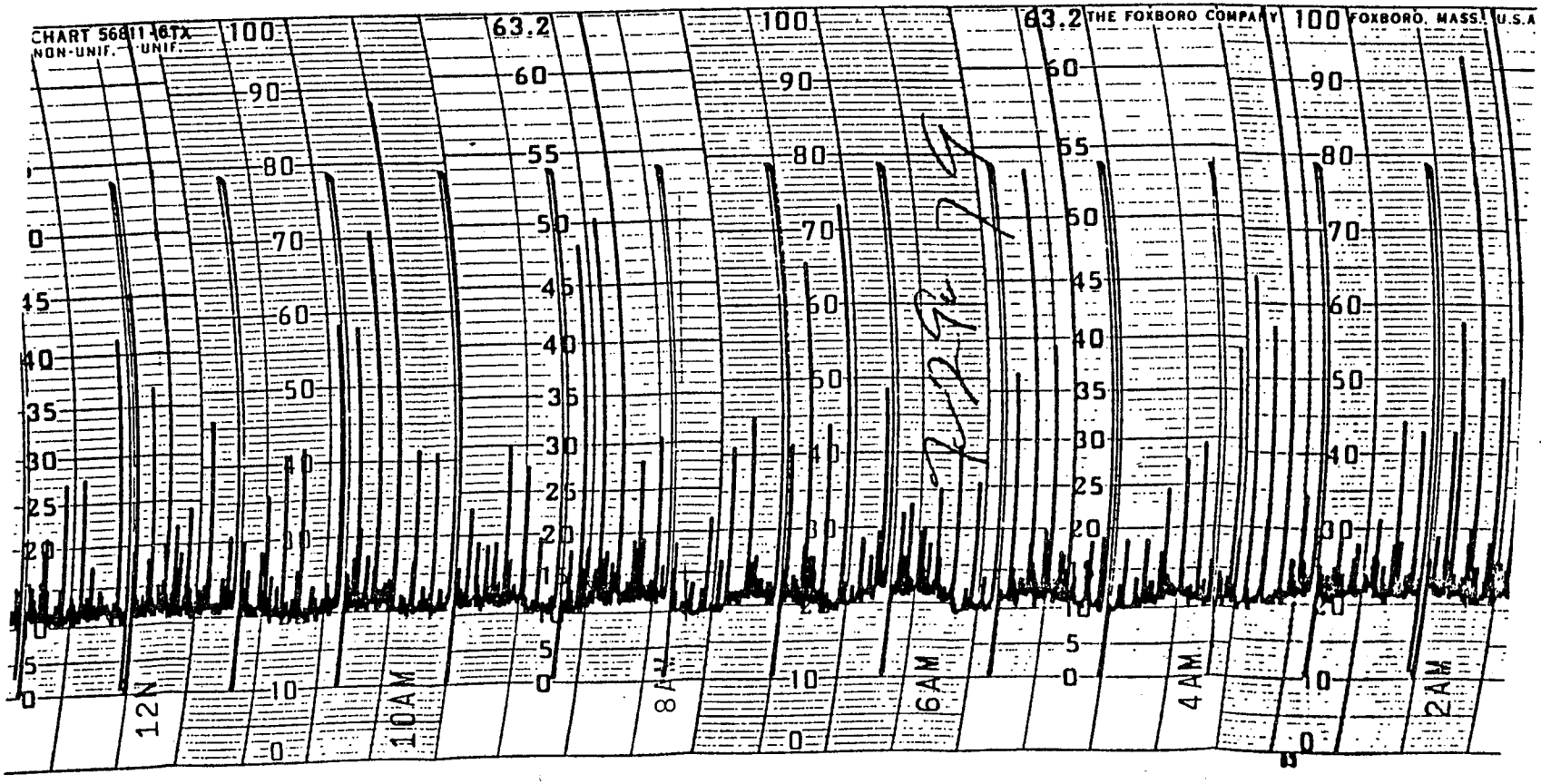

Figure 3-77. Typical opacity monitor output with severe rapping reentrainment losses.

Boiler Operating Conditions--The inspector should record such boiler operating conditions as steam flow (10^3 pounds per hour), flue gas oxygen (%), and flue gas temperature (^oF) at the time of the inspection. By comparing these current operating conditions with the historic baseline obtained during the performance test, the inspector can determine if the boiler is operating at normal production levels. Major deviations from normal values should be evaluated with respect to their impact on ESP performance and TRS and particulate emission levels. Operating conditions, continuous emission monitors (TRS and opacity), and ESP operating conditions should be used to determine if the boiler is in compliance with applicable standards.

Boiler operating data that should be measured during a performance test or an inspection are plant-specific. Each boiler is usually custom-designed and erected with a unique instrument and control system package. The level of instrumentation is specified by the design engineer and purchaser (plant engineering department). Based on the size of the boiler, its cost, and the experience of the purchaser, the instrument package may range from a straightforward package to one that is very complex. In general, a minimum amount of instrumentation is necessary for safe operation of the boiler, and all facilities will have this level of instrumentation. More complex instrument packages can include an automated computer control system that allows the source to optimize combustion and increase the overall efficiency of the operation.

Most critical boiler parameters are recorded on continuous strip charts, or circular chart recorders, and copies may be obtained after the stack test (at the end of the day) to provide the necessary documentation. Most mills require the boiler operator to record key parameters at set intervals on a log sheet or in a log book. The log sheet is typically divided into the following general measurement areas: black liquor, auxiliary fuels, forced air, furnace drafts, gas temperatures, feedwater, steam, and miscellaneous items.

Table 3-23 lists the items or conditions that must be recorded during the stack test or inspection. The list is based on a typical boiler and would require adjustment for individual installations.

Integrator readings also should be recorded at the beginning and end of each test run for the following parameters:

TABLE 3-23. RECOVERY BOILER OPERATING PARAMETERS TO BE RECORDED DURING PERFORMANCE TESTS OR INSPECTIONS

Parameter	Variable	Units
Black liquor	Liquor flow	gal/min (10^3 lb/h)
	Black liquor pressure	psig
	Gun size	None
	Number of guns	None
	Black liquor temperature	°F
	BLS to guns	%
	BL flow to ESP[a]	gal/min (10^3 lb/h)
	BLS to ESP[a]	%
	BL flow to evaporator[a]	gal/min (10^3 lb/h)
	BLS to evaporator[a]	%
Auxiliary fuels	Oil flow	gal/h
	Number of guns	None
	Oil pressure	psig
	Oil temperature	°F
	Natural gas rate	10^3 ft^3/h
Forced air	Primary air flow	scf/min
	Primary air pressure	in. H_2O
	Primary air temperature	°F
	Secondary air flow	scf/min
	Secondary air pressure	in. H_2O
	Secondary air temperature	°F
	Tertiary air flow	scf/min
	Tertiary air pressure	psig
	Tertiary air temperature	°F
	Total air flow	scf/min

(continued)

TABLE 3-23 (continued)

Parameter	Variable	Units
Furnace drafts	Furnace	in. H_2O
	Superheater outlet	in. H_2O
	Boiler outlet	in. H_2O
	Economizer outlet	in. H_2O
	ID fan inlet	in. H_2O
	Precipitator inlet	in. H_2O
Gas temperatures	Superheater outlet	^oF
	Boiler outlet	^oF
	Economizer outlet	^oF
	Evaporator outlet	^oF
	ID fan outlet	^oF
	ESP inlet	^oF
Feedwater	Flow	(10^3 lb/h)
	Pressure	psig
	Temperature	^oF
Steam	Flow	(10^3 lb/h)
	Drum pressure	psig
	Superheater temperature	^oF
Chemicals	Salt cake makeup	lb/min
Miscellaneous	Flue gas oxygen (boiler outlet)	%
	Black liquor heat value	Btu/lb BLS

[a]To be used with correction factors to calculate BLS to guns where not measured directly.

- Black liquor flow (10^3 pounds or gallons)
- Steam flow (pounds)
- Steam used in soot blowing (pounds)
- Oil flow (pounds or gallons)
- Natural gas flow (10^3 cubic feet).

Based on data obtained from the log, steam tables, integrator readings, and boiler design data, the following values should be calculated:

- Average steam flow for each run
- Average BL fired (10^3 pounds/hour) for each test run
- Average BLS fired (10^3 pounds/hour) for each test run
- Heat input (10^6 Btu/hour) to the boiler for each test run for each fuel fired (BL, oil, natural gas)
- Average boiler output (10^6 Btu/hour) for each test run
- Boiler thermal efficiency (heat output/heat input) for each test run
- Boiler excess air (percent)
- Pounds of steam per pound of BLS fired.

ESP Power Levels--The inspector should record ESP power levels (primary current, primary voltage, secondary current, secondary voltage) for all ESP fields and chambers. The spark rate should be estimated from a manual counting of meter deflections. The inspector also should plot ESP functions by field (inlet to outlet) for each chamber. Deviations from optimum values determined from baseline or normal values should be used to determine internal ESP conditions and to analyze potential emission levels. If recent V-I curves are not available, the inspector should request the plant environmental engineer or electrician to produce a V-I curve for each field. Data from the V-I curves should be used to target the inspection of the rappers, the gas distribution system, and local cooling and to check for inleakage. Serious deviations from normal values should be evaluated with respect to their impact on potential emission levels. Opacity data for each chamber are helpful in determining the effect of corona power levels. In general, the efficiency of the ESP follows the pattern of the Deutsch-Anderson equation or Matts-Öhnfeldt equation for prediction of emissions as a function of corona power and gas flow rates.

ESP Rappers--The inspector should determine if discharge electrode, collection plate, and distribution plate rappers are functioning. Particular attention should be given to areas identified as having decreased corona power or areas where higher corona initiation voltages were noted. Initial evaluation of the rappers should be based on sound intensity and/or failure to activate.

Flue Gas Volume--Because ESP performance is affected by total gas volume, the inspector should make an estimate of the volume based on black liquor firing rate, flue gas oxygen, and temperature. Most plants monitor flue gas oxygen at the economizer outlet rather than at the ESP outlet. An estimate of the flue gas volume must be based on ESP outlet conditions. The inspector should be equipped with portable temperature measurement equipment (i.e., thermometer or thermocouple) and portable oxygen measurement equipment (i.e., Fyrite oxygen analyzer). The flue gas volume may be calculated from a plant-specific F-factor (dry standard cubic feet/pound BLS) with correction for flue gas oxygen, moisture, and temperature. Temperature and oxygen measurements should be made at the outlet of each chamber where possible (accessible).

The following presents the method used to calculate the flue gas volume at the ESP inlet or outlet. It should be noted that the corrections for the flue gas oxygen are for dry standard gas volume not wet gas volume.

$$Q = \left[\frac{BLS}{min}\left\{F_{dry}\left(\frac{20.9}{20.9 - \%O_2}\right) + F_z\right\} + F_s + F_E\right]\frac{\left(T_s + 460\right)\ ^oR}{528^oF}$$

where

BLS = black liquor solids firing rate to the boiler.

F_{dry} = F-factor for black liquor solids in dscf/lb BLS.

$\% O_2$ = oxygen content of flue gas at ESP inlet in percent.

F_z = standard cubic feet of water vapor generated from combustion of hydrogen per pound of black liquor solids.

F_E = standard cubic feet of water vapor evaporated in direct contact evaporator.

F_s = standard cubic feet of water vapor added to flue gas stream as a result of soot blowing.

T_s = temperature of the flue gas at the ESP inlet in ^oF.

The amount of water evaporated in a direct-contact evaporator may be determined by using liquor flow rates and liquor solids content entering and leaving the unit (see Figure 3-78). This method is a simple mass balance based on the assumption that the total amount of solids does not change in the evaporator. This is not strictly true because the liquor does adsorb salt cake from the flue gas stream. This effect is considered negligible, however, in calculation of the water lost. If a more exact estimate is desired, adsorption rates may be estimated depending on flue gas volume (actual cubic feet/minute) and the uncontrolled boiler dust loading (grains/actual cubic feet per minute). In general, a cascade type evaporator may remove 50 percent of the uncontrolled particulate. In most units this will increase the total liquor solids mass by less than 5 percent and usually will result in less than a 2 percent error in the true gas stream moisture.

If a more exact or plant-specific value is desired, the F-factor can be calculated from stack test gas volume (dry standard cubic feet/minute), flue gas oxygen content, and firing rate of black liquor solids.

Using this method, the operator, inspector, or plant environmental personnel can make a day-to-day determination of the flue gas volume being treated by the ESP without the expense of conducting stack flue gas volume determinations with a Pitot tube.

When flue gas oxygen increases above the normal ranges, the source of inleakage should be identified immediately and appropriate repairs made to reduce the inleakage. Failure to reduce the inleakage will not only cause excess emissions, but because of the cooling effect of the ambient air, will also cause low-power input, excess sparking, and corrosion.

The amount of steam used in soot blowing is not generally measured, but based on discussions with ESP and boiler manufacturers and limited data from pulp mills, the value is estimated to be 8 to 10 percent of the rated steam flow of the boiler.[81] The value is expressed in pounds of water vapor per minute, which must be converted to standard cubic feet per minute. The values of F_z and F_{dry} may be compared with the values obtained during a stack test as a check on the validity of the derivation. The variables affecting these values are too numerous to list here, but they include wood species and mix, process step variables, quantity of inorganic salt cake recycled to the

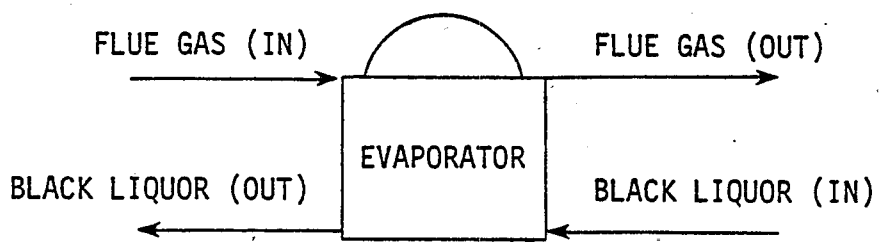

$$\text{water evaporated (lb/min)} = A\ \rho_i - B\ \rho_o$$

where

A = gallons of black liquor to the evaporator

ρ_i = density of black liquor into the evaporator in lb/gal

B = gallons of black liquor from the evaporator

ρ_o = density of black liquor out of the evaporator in lb/gal

$$A\ \rho_i \left(\frac{\%\ BLS_i}{100}\right) = B\ \rho_o \left(\frac{\%\ BLS_o}{100}\right)$$

where

$\%\ BLS_i$ = solids content of black liquor entering evaporator

$\%\ BLS_o$ = solids content of black liquor leaving evaporator

Figure 3-78. Method of calculating additional moisture in the flue gas stream due to direct-contact evaporator.

recovery boiler, percent solids in the black liquor, and heating value of the black liquor.

When deriving the black liquor F-factor from stack tests or by theoretical equations, it is convenient to work in terms of standard cubic feet of gas because it allows for addition of values without constant correction for different gas conditions. The ESP, however, must be analyzed at the actual gas conditions (i.e., at the measured temperature and oxygen content). Once established, the values of F_{dry} and F_{total} tend to remain relatively constant provided no significant changes in the process occur.

The use of an established F-factor to determine gas flow through the ESP requires relatively little calculation. Only the following are needed: value of the F-factor (dry), firing rate of the black liquor, percent BLS, density of the black liquor, and the temperature and oxygen content of the flue gas.

The ESP dimensions can be obtained from engineering drawings (blueprints). Using these dimensions will usually produce superficial velocity values that are slightly lower than actual values. The area input into the calculations does not account for the cross-sectional area blocked by the plates and wires. The calculated value should be in the range of 2.5 to 4.0 ft/s, and the lower values generally are recommended. Obviously, as the superficial velocity in an ESP decreases, treatment time will increase. Also, if the superfical velocity exceeds 8 ft/s, not only will the treatment time drop, but reentrainment of captured particulate may occur as a result of the high velocity stripping material off the ESP plate. Thus, it is important to consider the gas volume through the ESP. Gas volume is especially critical if there is a possibility of high excess air levels resulting from air inleakage or improper boiler operation, or if high gas volumes could occur from overfiring the recovery boiler.

Another value that should be checked is the actual SCA. This value relates the total available plate area to the gas volume (ft^2/1000 acfm), and when compared with design or baseline values, indicates ESP performance capabilities. Generally, an increase in the SCA (actual) means improved performance, but other factors are involved; therefore, a comparison of actual SCA with design or baseline values is not meaningful by itself.

ESP Corona Power--The evaluation of ESP performance is based primarily on T-R electrical readings from both primary and secondary meters. The

inspector can define most of the problem areas and determine the ESP performance level externally through the use of a combination of calculations and the evaluation of trends present in the data.

Secondary meter readings are preferred for an evaluation of ESP performance and diagnosis of ESP problems because they tend to reflect more closely the power input characteristics of the ESP. For example, the secondary voltage at which secondary current is initiated can be used to determine if ash is building up on the wires and if insulators are tracking. These data allow adjustment of the vibrator intensities for optimum power input and indicate the need for cleaning or replacing insulators. The secondary current/voltage curve also can be used to diagnose clearance problems and indicate plate warpage and/or wire frame misalignment on a section-by-section basis.

No voltage on the secondary side may indicate an open primary circuit. The circuit breaker may be open or tripped or a reactor secondary may be open. High voltage on the primary side and no voltage on the secondary side may be due to a faulty, open, or disconnected ESP; an open bus; or a faulty rectifier. Low voltage on the secondary side coupled with low voltage on the primary side could be the result of leaks in the high voltage insulation, buildup of dust in the discharge system, excessive dust on electrodes, or swinging electrodes.[62]

No secondary current and no secondary voltage indicate an open primary circuit. Irregular secondary current coupled with low secondary voltage indicates a high-resistance short in the circuit, possibly due to excessive dust or arcing.[62]

Because primary meters can provide an indication of the voltage and current going to the ESP, they can be used if they are the only meters available to obtain a more indirect measure of ESP performance. For example, no voltage on the primary side may indicate an open primary circuit. The circuit breaker may be open or tripped, or the reactor secondary may be open. High primary voltage may indicate an open transformer primary or improper connection of an ESP, a faulty, open, or disconnected ESP, an open bus, or a faulty rectifier. Low primary voltage may indicate leaks in the high-voltage insulation, excessive dust on electrodes, or swinging electrodes.[62]

An ammeter reading that shows no primary current associated with no primary voltage indicates an open primary circuit, which may be due to open circuit breakers or an open reactor secondary. Irregular primary current coupled with low primary voltage indicates a high-resistance short in the circuit. The causes of this condition include electrode short, excessive dust on collecting surfaces, excessive dust on electrodes, support insulator arcing, and the possible presence of foreign material.[62]

When recording and evaluating ESP meter readings, the inspector should realize that trends in the voltage and current levels are the first indicators of ESP performance levels. Specifically, a gradual rise in the ESP secondary current levels should be apparent as one progresses from the inlet to the outlet fields (Figures 3-79 and 3-80). The secondary current level seldom exceeds 250 milliamperes (mA) in the inlet fields. Typical designs call for a current level of 0.02 mA per linear foot of wire length in the inlet fields. Sparking in the inlet fields is evidenced by deflection of the meters during a spark. When the meters indicate progression toward the outlet field, secondary current levels should increase and sparking should decrease, with almost no sparking occurring at the outlet. Most ESP outlet field T-R current levels should be at least 85 percent of the T-R set current rating (e.g., if the secondary current rating was 1000 mA on the outlet T-R, a design reading of at least 850 mA is normally expected) and in the range of 0.06 to 0.08 mA per linear foot of discharge wire.

Another trend the inspector may note is a gradual decrease in the secondary voltage from inlet to outlet. Larger ESP's (with five fields or more) often experience lower voltages in the inlet field due to sparking, an increase in voltage in the middle fields, and then a slight decrease in voltage in the outlet fields.

The gas entering the inlet field of the ESP contains the greatest concentration of particulate, and the greatest quantity of particle charging occurs in this field. Consequently, a great many electrons are captured during charging, and the rate of charge transfer from the discharge to the collection electrodes is lessened because the mass of the particles migrating toward the plates is considerably larger than that of the electrons or charged molecules (ion mobility). In addition, more force is required to

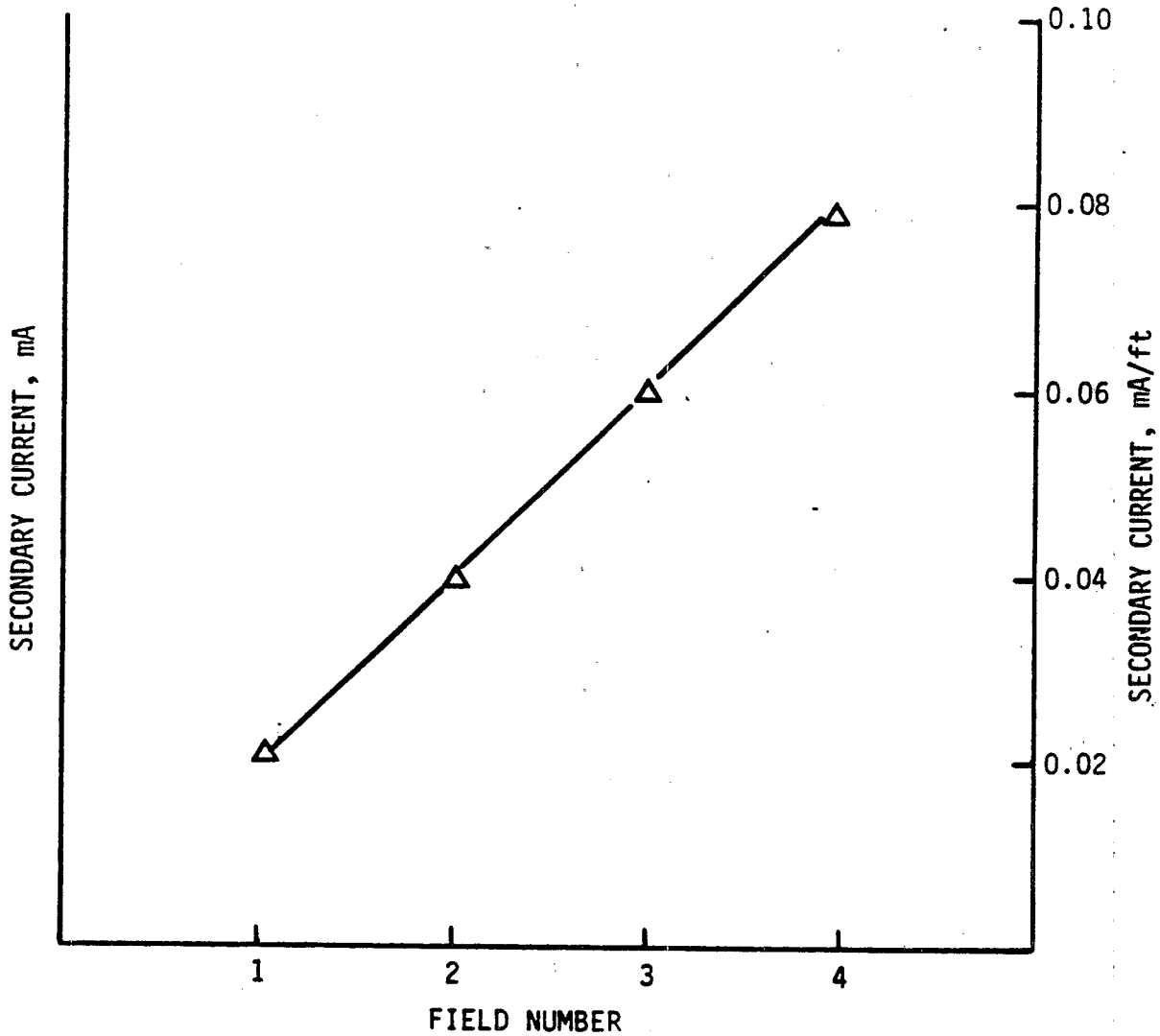

Figure 3-79. Optimum secondary current distribution in ESP serving kraft recovery boiler, assuming uniform rapping and wire size in all fields.

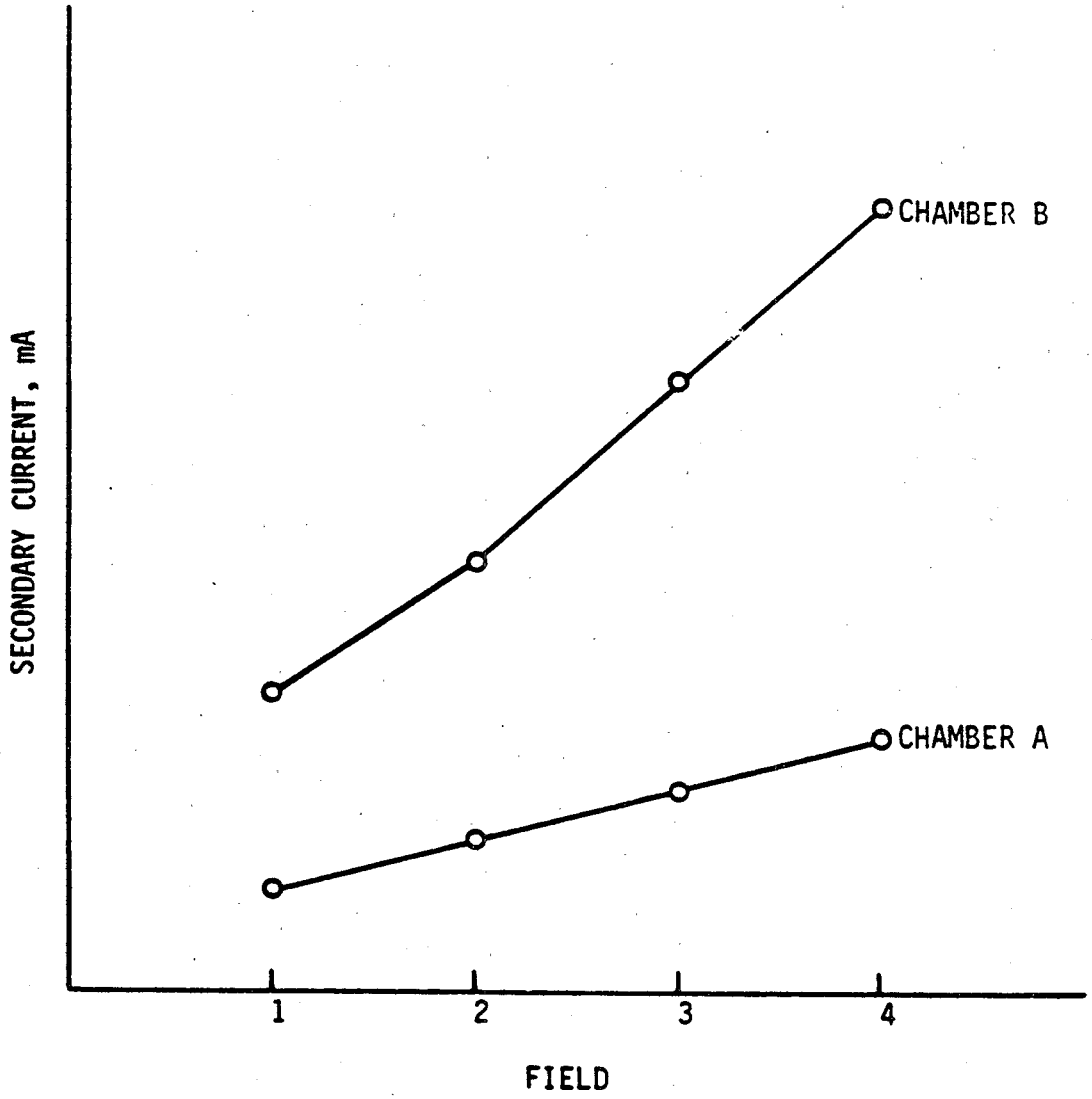

Figure 3-80. Secondary current pattern for two ESP chambers; Chamber A is having maintenance problems that limit power input.

move the electrons from the corona discharge to the collecting plates because the charged particles in the interelectrode space act as a large electro-negative cloud that repels the electrons. This is known as the "space charge" effect and is usually present only in the first and sometimes the second electrical field. The greatest sparking occurs in this field because this large cloud of charged particles tends to form numerous paths for interelectrode gas breakdown (spark formation). Thus, operation in this field tends to be a balance between very high electrical field strengths and reduction of spark rates to moderate levels without excessive waste of electrical power.

As the gas moves through the ESP and the particles migrate to the plate, fewer particles remain to be captured and to inhibit the flow of electrons. Therefore, less force (voltage) is required to obtain a high current flow. Usually the increase in current is much greater than the decrease in voltage, and the net effect is an increase in power input from ESP inlet to outlet.

The relationship or ratio between voltage and current levels for each T-R is not constant throughout the ESP (from inlet to outlet). Changes in the voltage-current relationship are due to capacitance and resistance characteristics of the particulate, as well as to inefficiencies in the circuitry of the T-R set at various operating levels. The relationship between the primary and secondary voltage and current levels will not be constant from inlet to outlet for the same reasons. Thus, general relationships between primary and secondary meter readings are difficult to establish and will change with dust characteristics. Over very narrow operating ranges within a T-R, however, the relationship between primary and secondary voltage and current levels may be considered linear. This relationship is useful in evaluating ESP performance if a secondary meter is out of service and the corresponding primary meter on the other side of the transformer is operating.

Although trends in the voltage and current levels are important in evaluating ESP performance, the corona power input provides one of the most useful indicators. Secondary meters are preferred in determining corona power because they are more indicative of actual power input to the ESP. Primary meters may be used for this calculation, however, if they are the only meters available, provided an appropriate efficiency factor is used. Corona power calculations are simply the product of the secondary voltage

multiplied by the secondary current to yield watts of power to the ESP field from the T-R. This calculation should be made for each field of the ESP. When both primary and secondary meters are available, the primary voltage and current levels should be multiplied to yield primary power input to the T-R in watts. The value produced by the primary meter must be higher than that obtained from the secondary meter. If the secondary power product (corona power) is higher than the primary power input, then the values on the meters are incorrect. Isolating the malfunctioning meter, however, may be very difficult.

Electrical losses occur in the T-R during increases in voltage and rectification to an unfiltered DC wave form. In addition, losses in the T-R control circuitry reduce the efficiency of transferring from primary input power to secondary corona power. This efficiency factor for the T-R may be calculated through the use of the ratio of secondary power to primary power:

$$\text{T-R efficiency} = \frac{\text{secondary power}}{\text{primary power}} \qquad \text{(Eq. 1)}$$

This value usually ranges from 0.55 to 0.85, although values up to 0.90 are occasionally observed. In general, the value of the T-R efficiency increases as the T-R approaches its rated output current level. Thus, T-R efficiencies tend to be lower in the inlet fields (0.55 to 0.60) and higher in the outlet fields (0.80 to 0.85) because of limitations imposed on the electrical operating characteristic by particulate load and space charge effect. A value of 0.70 to 0.75 is usually appropriate as an average for all fields in the ESP.

Another item that should be checked in multichambered ESP's with T-R's for each chamber is a balance of power across the ESP. The secondary current level and power input for each field should be approximately equal across the ESP. Some relatively small differences may occur because of rapper sequencing, slight gas flow imbalances, or differences in internal alignment. These differences should not be large in most ESP designs, however, as chambers with equal gas flow and equal power levels give the best ESP performance.

Once the power levels have been calculated and the patterns checked as previously discussed, the corona power from each T-R should be added and totalled to yield total corona power to the ESP (in watts). When multichambered ESP's are installed with T-R's serving each individual chamber,

the corona power levels should be totalled for each chamber (to indicate balanced power), and an overall total corona power level should be calculated for all chambers.

Baseline test values, if available, should be compared with the actual secondary current and corona power levels. If the gas volume through the ESP is nearly identical to the test value and the meter readings are also nearly the same, then ESP performance is usually similar to that observed during the stack test. It is usually not possible to compare design power levels to performance levels, as these are usually not included in most design information. A key indicator of ESP performance is the specific corona power, which provides a useful value for determining whether ESP performance has changed significantly.

Specific corona power is calculated by the following equation:

$$\text{Specific corona power} = \frac{\text{total corona power (watts)}}{\text{total gas volume (1000 acfm)}} \qquad \text{(Eq. 2)}$$

This value may be calculated for the entire ESP or for individual chambers. The volume obtained by the modified F-factor (divided by 1000) is substituted into this equation. In general, the higher the value of the specific corona power, the higher the ESP removal efficiency. Thus, one may determine whether ESP performance would be expected to increase or decrease by evaluating the specific corona power.

In general, the specific corona power needed to meet NSPS for kraft recovery boilers is usually above 400 watts per 1000 acfm, although acceptable performance may be obtained with lower specific corona power values if there are no major problems with power distribution, inleakage, or rapper operation. Equation 2 indicates that a decrease in gas flow through the ESP may lead to an increase in performance (constant corona power is assumed). In this case, however, the corona power is generally not constant, but increases with decreasing gas velocity (volume) because the bulk of the particles do not penetrate far enough into the ESP to inhibit power input (the opposite occurs with an increase in the gas volume). Thus, a decrease in gas volume may substantially increase ESP performance. This relationship provides an important reason for evaluating firing rates and excess air levels. It should be noted, however, that poor performance is possible (but less likely) with

specific corona power levels of more than 750 watts/1000 acfm and that specific corona power provides a useful but not a sole indicator of ESP performance.

Another useful indicator of ESP performance is power density (watts/ft^2 plate area). The value for the power density may be calculated by the equation:

$$\text{Power density} = \frac{\text{corona power input}}{\text{ft}^2 \text{ plate area}} \qquad \text{(Eq. 3)}$$

This calculation may be performed for each field by substitution of the T-R corona power and the plate area associated with that T-R into the equation. The increasing trend from inlet to outlet that should be evident may range from 0.25 W/ft^2 at the inlet to 5 W/ft^2 in the outlet field. This calculation is useful for ESP's that do not employ equally sized fields. The trend of secondary current and corona power is not smooth, but this calculation will help "normalize" the values. A corresponding calculation may be performed on the secondary current (current density, mA/ft^2) to normalize the data.

The substitution of total corona power and total plate area into the equation will usually determine the overall power density. Values of 1 to 3.0 W/ft^2 are typical and usually indicate good performance. As with specific corona power, however, performance may be poor even though the power density may be high.

A baseline test can be used to calculate ESP efficiency. The baseline test is used to calculate total corona power, gas volume, and efficiency or penetration (1 - efficiency). The values from the baseline test can be used along with a modified version of the Deutsch-Anderson equation to calculate a constant that may be used in subsequent calculations:[68]

$$P_t = e^{-0.06\ K(Pc/Q)} \qquad \text{(Eq. 4)}$$

where

P_t = penetration
K = constant
Pc = corona power, watts
Q = gas flow, 1000's acfm

This equation relates corona power input and gas flow to ESP performance. The original form of the Deutsch-Anderson equation assumed maximum and non-varying field density and related particle migration rate to the SCA of the ESP. The particle migration rate, however, was a function of corona power input; thus, corona power changes the particle migration rate and the ESP efficiency. This equation is useful in predicting changes in efficiency provided that wide variations in the specific corona power have not occurred or the power distribution within the ESP is not seriously altered.

The value of "k" will typically fall in the 0.1 to 0.25 range for most kraft recovery boilers. Once the value of the constant has been calculated, it can be used in subsequent calculations in which inspection data are used. Because the equation usually will overpredict performance within narrow operating ranges, the efficiency predicted is based on the assumption that all the power is used to collect particulate. As substantial power decreases occur, however, the equation may substantially underpredict performance because the equation becomes very sensitive to variations in the specific corona power. In fact, the value of the constant begins to change with substantial increases or decreases of specific corona power, and the predicted performance may be incorrect by as much as half an order of magnitude when applied over a very wide range of specific corona power. The value of the constant and the behavior of the ESP will also change with inoperative T-R's (particularly those in the inlet fields). The equation will, however, provide a gross indication of a performance shift.

The underlying limitation to the equation is the assumption that the power input and the changes in power input are the only factors that affect ESP performance once the SCA and gas volume are fixed, and that the value of the constant and the effective migration velocity are linearly related. Actually, the relationship in the value of the exponent is probably a power function similar to that presented in the Matts-Öhnfeldt equation, which makes the equation less sensitive to variations in power input. Using an equation at conditions different from baseline values still requires care, however.

In summary, evaluation of ESP data includes plotting of secondary current to discern an increase from inlet to outlet; calculating corona power from

primary or secondary meters; evaluating the balance in the readings between parallel fields; calculating total corona power, power density, and specific corona power; and comparing these values to baseline readings. If conditions are nearly identical, performance is likely to be similar. For small changes of specific corona power, an indication of the magnitude of any performance shift may be estimated by use of a modified form of the Deutsch-Anderson equation. Care must be exercised not to use this equation when gross changes in ESP operation have occurred unless the values are modified appropriately.

ESP External Conditions--The inspector should visually inspect the ESP shell to determine the condition of the insulation and note any major points of oxygen inleakage and corrosion. The external inspection should be based on the analyses of flue gas oxygen and ESP power levels. Table 3-24 summarizes the parameters that the inspector should measure as part of an ESP inspection.

TABLE 3-24. PARAMETERS TO BE MEASURED BY THE INSPECTOR DURING LEVEL III INSPECTION OF RECOVERY BOILER ESP

Parameter	Location	Units
Flue gas oxygen	ESP inlet ESP outlet	% %
Flue gas temperature	ESP inlet ESP outlet	^{o}F ^{o}F
Primary voltage	Each field	Volts
Primary voltage	Each field	Amperes
Secondary voltage	Each field	Kilovolts
Secondary voltage	Each field	Miliamperes

Record Review--The inspector should review the records maintained by the plant environmental engineer with regard to component failures, outages, and trends to determine the performance of the unit between inspections. Typical records that should be reviewed include weekly inspection reports, quarterly inspection reports, annual internal inspection reports, air-load and gas-load V-I curves, work orders, wire breakage location charts, and the number of component failures (e.g., rappers, insulators, wires). To interpret the

maintenance records adequately, the inspector should request a copy of the ESP specifications and ESP construction blueprints (arrangement, wire frame, plate detail, etc.).

3.3.2 Smelt Dissolving Tank

The following subsections describe the smelt dissolving process, identify the major emission sources, discuss the control techniques for minimizing emissions from the smelt dissolving tank, discuss the possible malfunctions associated with the operation of the smelt dissolving tank, and present the inspection procedures for the smelt dissolving tank and associated control equipment.

The particulate emissions from the smelt dissolving tank are generally controlled with low-energy scrubbers. The smelt dissolving tank malfunctions that affect emissions are generally associated with the various types of scrubbers that are used to control the particulate emissions. Table 3-25 on page 215 summarizes the malfunctions and identifies their potential impact.

The inspection of the smelt dissolving tank area usually involves a Level II Inspection because of the limited accessibility of sampling locations. The level of inspection depends a great deal on the availability of instrumentation and access to the control equipment. A detailed discussion of the items to be covered in Level I, II, and II inspections for smelt dissolving tanks is presented in Section 3.3.2.4.

3.3.2.1 Process Description--

Molten smelt composed of sodium sulfide and sodium carbonate is drained from the recovery furnace hearth through smelt spouts. The smelt is discharged into a water-filled vessel referred to as the dissolving tank. "Green liquor" is formed by the incorporation of the smelt into water through quenching.

The melting point of the smelt is defined by the composition, i.e., percent Na_2CO_3 and Na_2S. Figure 3-81 presents an equilibrium diagram for the system.[12,82] The hearth is generally operated at a high temperature to ensure free-flowing smelt. Temperatures in the smelt spout are typically between 1600° and $2000^{o}F$.

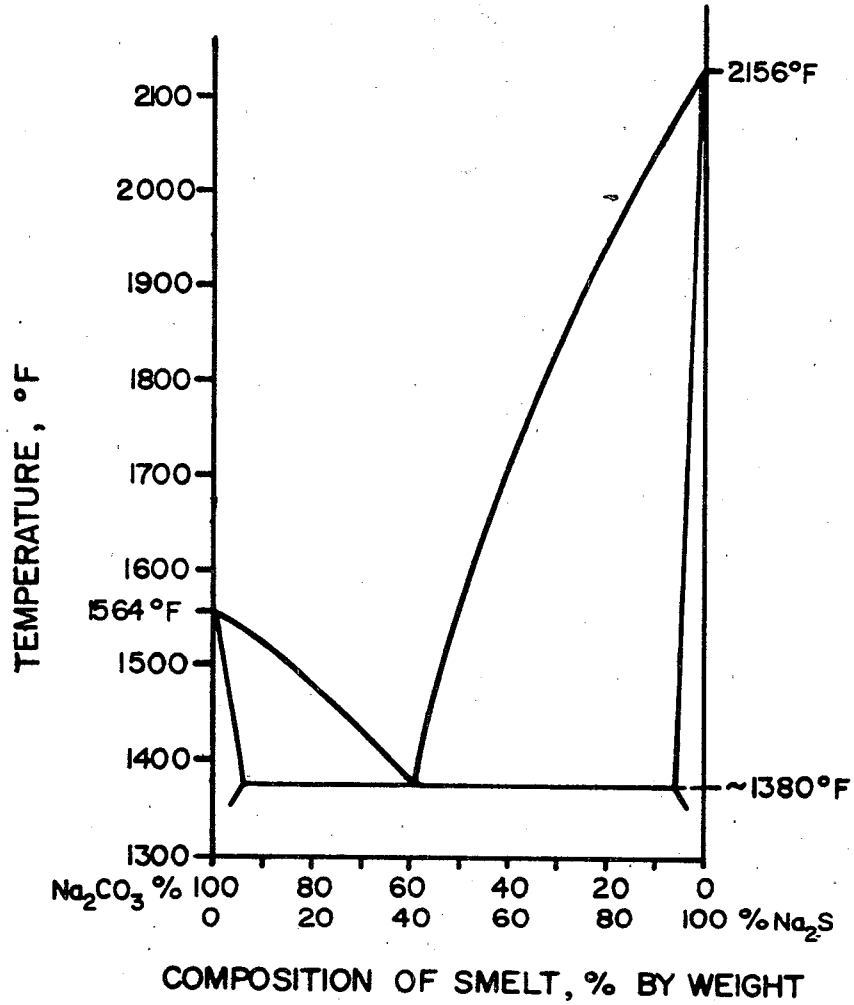

Figure 3-81. Equilibrium diagram for a Na_2CO_3-NA_2S system.[12,82]

The dissolving tank is a cylindrical metal tank in which green liquor is formed by dissolving the smelt. The tank is vented to provide relief for the steam produced by the quenching of the smelt.

Green liquor levels are maintained several feet below the top of the tank to allow for expansion and steam liberation. High liquor levels result in carryover of liquor droplets and particulate matter into the tank vent system. The tank is agitated with compressed air or mechanical agitation to aid in mixing. The water-cooled smelt spout enters the tank through a doghouse enclosure installed on the top of the tank.

Steam or recirculated green liquor is used in the smelt spout to shatter the smelt before it contacts the liquor surface. Incomplete shattering can result in violent steam explosions as large droplets enter the water and

release excessive quantities of steam. The major causes of explosions in smelt tanks (which constitute a serious and potentially dangerous problem) are smelt sulfidity, lack of shatter efficiency, lack of smelt reduction efficiency, sodium chloride content, and sodium hydroxide.

Figure 3-82 and 3-83 show two designs for smelt dissolving tanks that use water sprays and/or steam shatter jets.[83] Gases that are generated from the tank (primarily water vapor, entrained air, and TRS) are vented through a natural draft stack or with an induced draft fan.

Because of the turbulence in the space above the liquor, significant amounts of particulate are emitted with the steam. The uncontrolled emission rate from the tank varies greatly depending on quench rate, tank design, exhaust volume, and smelt chemistry. Some data indicate a strong relationship exists between steam shatter flow and carryover. The location and amount of steam used also has an effect on TRS emissions.[84]

By proper attention to tank design, steam shatter jet location, steam flow, and vent control, many mills are able to operate with minimum abatement equipment on the smelt dissolving tank stack.

3.3.2.2 Sources of Emission and Control--

Particulate emissions from the smelt tank are controlled by a number of low-energy scrubbing systems. The simplest system consists of a wire mesh pad mist eliminator equipped with a back-flush system to remove collected particulate (Figure 3-84). The pads are about 1 ft thick and are generally made of stainless steel wire. Low vertical velocities through the pad must be maintained to prevent channeling and/or liquor reentrainment (<20 ft/s). Water flow is used on an intermittent basis. Usage can be determined by time or pressure drop. Typical pressure drops are 1 to 2 in. H_2O and back-flush rates are 3 to 4 gal/1000 acfm of gas. Expected particulate removal efficiencies can range from 70 to 90 percent.

Higher removal efficiencies may be achieved by use of low-energy spray towers or packed-bed scrubbers. The packed-bed scrubbers are generally used after low-energy scrubbers to remove TRS emissions. The scrubbing liquor is usually weak wash water.

The use of low-energy entrainment scrubbers with packed beds for particulate removal has achieved efficiencies above 95 percent. Typical liquor-to-gas ratios are 4 to 8 gal/1000 acfm at a pressure drop of 4 in. H_2O (Figure 3-85).[85]

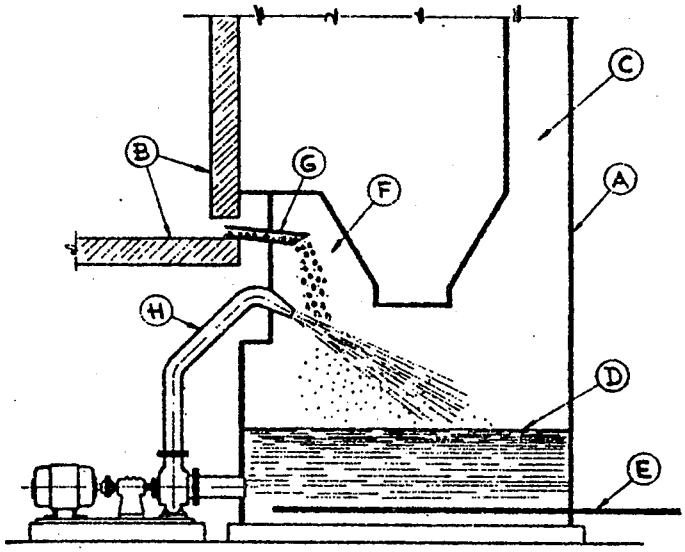

LEGEND

A — dissolving tank
B — furnace
C — vent stack
D — green liquor
E — air line for agitation
F — dog house
G — smelt spout
H — circulated green liquor shatter spray

Figure 3-82. Smelt dissolving tank with water sprays.[83]

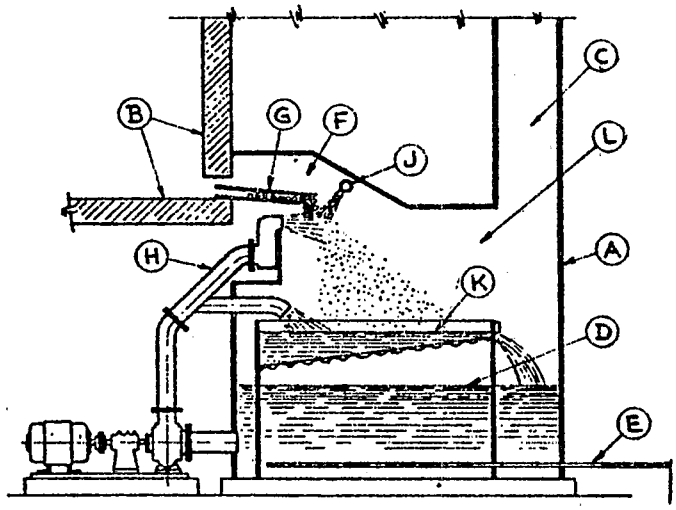

LEGEND

A — dissolving tank
B — furnace
C — vent stack
D — green liquor
E — air line for agitation
F — dog house
G — smelt spout
H — circulated green liquor spray
J — steam shatter spray
K — tray
L — vent

Figure 3-83. Smelt dissolving tank with steam shatter jets.[83]

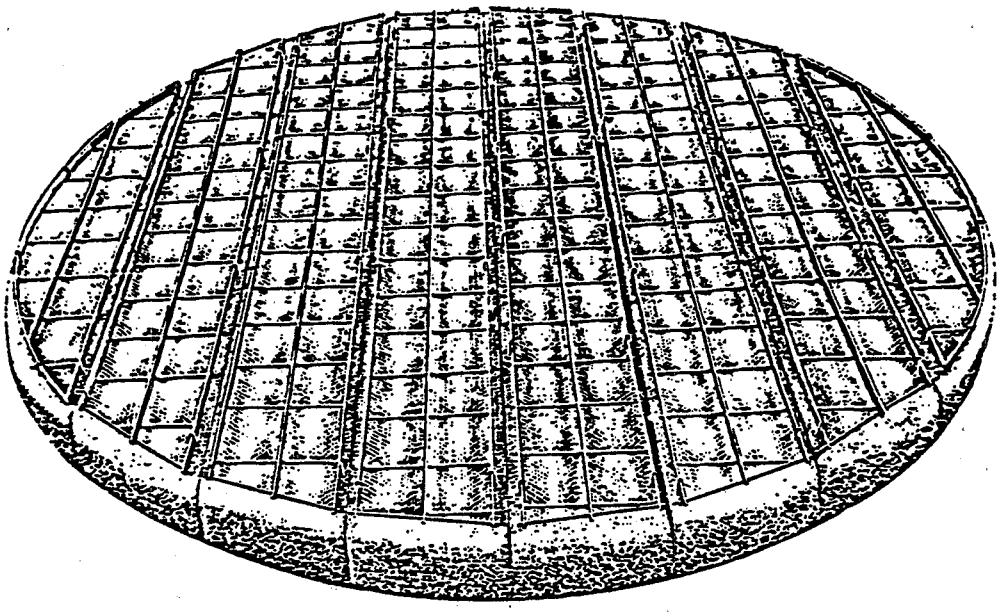

Figure 3-84. Wire mesh pad used in smelt dissolving tank vents.

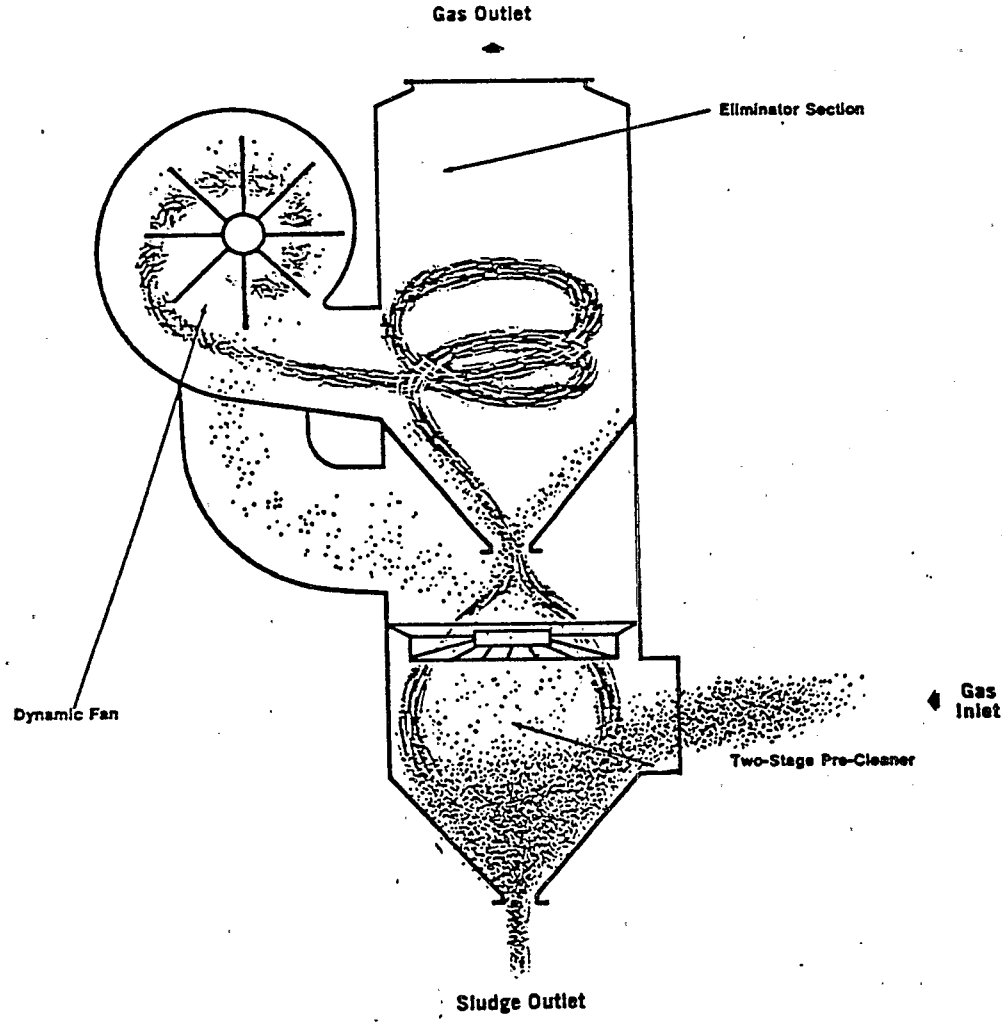

Figure 3-85. Low-energy entrainment scrubber for use on smelt dissolving tank vent (Ducon dynamic scrubber).

Low-energy venturi scrubbers also can be used on tank vents. Common design pressure drops are 6 to 8 in. H_2O at liquor-to-gas ratios of 8 to 10 gal/1000 acfm. Removal efficiencies can exceed 99 percent.

3.3.2.3 Malfunctions--

Typical smelt dissolving tank malfunctions involve reduced efficiency of the abatement system. Table 3-25 describes malfunctions associated with each type of control device.

TABLE 3-25. MALFUNCTIONS THAT MAY OCCUR IN SMELT TANK PARTICULATE CONTROL SYSTEMS

Control system	Malfunction	Result
Mesh pad	Low water flow	Pluggage of pad
	Maldistribution of back flush water	Pluggage of pad
	Pad pluggage	Channeling and bypass
	High gas flow rates	High pressure drop and droplet reentrainment
Low-energy scrubber	Low water flow	Low efficiency
	Pluggage of packed bed or nozzles	High pressure drop and/or channeling
	Pluggage or demister	Liquor reentrainment
Venturi scrubber	Throat wear	Low pressure drop
	Low water flow rate	Low pressure drop
	Poor water distribution	Low pressure drop

3.3.2.4 Inspection of the Smelt Dissolving Tank Area--

The smelt dissolving tank area is usually inspected in conjunction with the recovery boiler area because of the proximity of the smelt dissolving tank(s) to the recovery boiler and the accessibility to control instrumentation, which is usually installed in the recovery boiler control room. The instrumentation is normally limited to process-related parameters such as the production rate, composition (or density), and temperature of the green liquor, but some instrumentation may be available for the control equipment.

The control equipment used on smelt dissolving tank vents usually consist of mesh-pad mist eliminators or low-energy venturi or cyclone scrubbers. These particulate control devices are well suited to this operation because a wet saturated gas stream is involved and the particles generated by the smelt dissolving tanks tend to be relatively large and easy to remove with low energy input. Scrubbing liquor is usually allowed to flow down the stack walls directly to the smelt dissolving tank. The use of fiber-reinforced plastic (FRP) components is common to avoid corrosion problems associated with high moisture conditions. In general, the control equipment used on the smelt dissolving tank vents is not very complex.

The vent gases contain water droplets, Na_2S, and $NaCO_3$ particles generated by the quenching of the molten smelt leaving the bottom of the recovery boiler. The continuous flow of liquid smelt is not, however, allowed to be quenched en masse in the smelt dissolving tank. Rather, steam shattering nozzles are typically applied to the smelt spout to form particles of smelt that are easier to cool and dissolve because they have a larger surface area. As the molten smelt is cooled and steam evolves under relatively turbulent conditions, however, smaller particles of smelt are carried out of the dissolving tank in the vent gases. These are the particles that the control equipment is attempting to collect.

The three levels of inspection that have been defined for this area are outlined below. Limitations of accessibility to measurement points will often limit the inspector to a Level II Inspection with some of the elements of a Level III Inspection. Much depends on the availability of instrumentation and access to the control equipment.

Level I Inspection--Observing visible emissions is of limited value for the smelt dissolving tank stacks. The three general limitations are 1) uncombined water vapor produced by quenching of the smelt usually causes the formation of a condensed steam plume, which forces observations to be made beyond the point of steam plume dissipation; 2) the stack outlet is usually near other outlets associated with the recovery boiler operation, which may interfere with the ability to read the opacity of the individual plume; and 3) it is difficult to select an observation site that will provide optimal background and contrast conditions and establish the proper sun-source orientation without interference from other sources.

Observing visible emissions observation is useful, however, when large changes in the opacity occur. Such changes may indicate a change in the operation of the smelt dissolving tank or control equipment. For example, a change in the positioning or pressure of the shattering nozzles may cause a shift in the size of the smelt particles formed. If smaller particles are formed, they may be more difficult to collect in the control equipment at a fixed energy input level and greater penetration may occur. In addition, a shift in particle size may enhance the light-scattering characteristics of the particulate so that opacity would increase as a result of both finer particulate and higher concentrations. A failure in the control equipment might produce similar results. Thus, the visible emissions observation of the Level I Inspection may be used as a screening tool to determine areas that may warrant further investigation.

Level II Inspection--The Level II Inspection involves a combination of observation of the opacity of the stack plume and a physical check of the air pollution control equipment to confirm operation (although equipment operating parameters are not measured). Operating data from available instrumentation are obtained for both the process and the control equipment. Typical process-related information that should be recorded include green liquor production rate (tons/hour, gallons/minute, or gallons/hour), liquor composition or density, liquor temperature, and smelt dissolving rate (from recovery boiler). Typical control equipment parameters that may be monitored include pressure drop, stack temperature, and the flow rate, pressure, and (in some cases) temperature of the scrubber water. Because no measurements are made of these parameters and the inspection includes only visual confirmation of component operation (pumps, fans, etc.), the inspector must base his or her subjective assessment of the accuracy of these data on this monitoring effort. If the instruments providing the data are inadequate or malfunctioning, the result may be an incorrect assessment of the control equipment compliance status.

To the extent possible, the values obtained during the inspection should be compared with values from the design, baseline, or previous inspections to determine if there has been a significant change in performance or in the number of equipment malfunctions. With the low-energy equipment that is being used, performance can change significantly with only a slight shift in

pressure drop. For example, a change from a 6-in. to a 4-in. H_2O pressure drop in a low-energy venturi is significant, whereas with much higher operating pressures this shift might not be considered significant. If particle size is not very small, however, a shift in pressure drop may not significantly affect emissions. It is usually the identification of the causal factors of the parameter change that determines the magnitude of performance changes. These causal factors are not always easily identified through a Level II Inspection.

Level III Inspection--The detailed inspection procedures associated with a Level III Inspection are slightly different for each control device used to minimize the emissions from the smelt dissolving tank, but all of the control devices have common elements. The characteristics of each type of control equipment are discussed to aid the inspector in the diagnosis of operation and/or maintenance problems.

The operating parameters that are common to all the pieces of control equipment include smelt production rate, green liquor production rate, liquor composition or density, and liquor temperature. The control equipment parameters the inspector should obtain include the scrubber pressure drop, stack temperature, scrubber water flow rate, scrubber water pressure, and, in some cases, scrubber water temperature. These parameters, along with the observation of visible emissions, are the same components that makeup a Level II Inspection. The difference between Level II and III Inspections is that in the latter the inspector actually measures some of these parameters. In addition, the inspection is keyed toward identifying operating problems that characterize control equipment performance.

A most useful parameter for diagnosis of the control equipment operation is the measurement of volumetric flow rate of the gas into the control equipment. The most accurate method of obtaining this parameter is to select a suitable location for performing a Pitot traverse and determining volumetric flow rate. The gas density will be somewhat less than air density because the gas will contain a substantial fraction of water vapor at (typically) saturated conditions. The volumetric flow rate will be related to the quantity of air inleakage around the smelt dissolving tank, the production rate of smelt, and the smelt temperature leaving the furnace (affecting the steam evolution rate). Using fan operating parameters to determine gas volume

(where fans are used) is usually impractical because the density of air and water vapor differs significantly and because entrained water droplets can increase the energy requirements of the fan.

The value obtained by use of the Pitot tube should be compared with the design gas volume or a value obtained from a previous stack test. If production rates are comparable, the volumetric flow rates should be similar (within ± 15 percent) unless changes have occurred elsewhere in the system.

Another key parameter that should be measured is pressure drop. Although this parameter is typically monitored by a magnehelic gauge, the taps should be removed from the sampling locations and cleaned, and the inspector should check the measurements with his or her own gauge. In some instances, the pressure taps are connected to recording and controller instrumentation that regulate water flow rates and alarm systems. Taking care not to interfere with these systems, the inspector should measure pressure drop through separate taps that do not interfere with active systems. Before removing taps, the inspector should check with plant supervisory personnel concerning any union rules that might require union personnel to perform this task.

The principal operating problem to be detected in the mesh-pad control and low-energy venturi scrubbers is one of improper distribution of scrubbing water or the gas stream within the control device. These maldistribution problems tend to allow a portion of the gas stream to bypass the zone where particulate collection mechanisms are operating. In addition, maldistribution problems are often more crucial in the operation of this equipment because such small energy inputs are typical. For example, mesh-pad mist eliminators tend to operate at around a pressure drop of 2 inches H_2O, venturi scrubbers operate with a pressure drop of 6 to 8 inches H_2O, and cyclone wet-fan scrubbers operate with a pressure drop of between 4 and 8 inches H_2O. These small energy inputs make the control equipment sensitive to maldistribution problems, whereas larger pressure drops tend to reduce the sensitivity to distribution problems. If the scrubbers are operating properly, however, larger energy inputs are usually not necessary.

A change in pressure drop in these low-energy devices is normally significant and indicates that the performance of the control equipment has changed. Fortunately, the particulate size is large by air pollution control standards, which helps reduce the sensitivity to changes in pressure drop. The purpose

of the Level III Inspection is to assess the causes of these changes and determine their significance with regard to emission rates.

For mesh-pad eliminators, the usual indication of operating problems is an increase in pressure drop, usually caused by an increase in the pad's resistance. Most mesh-pad systems use continuous back-flushing sprays through the bed to minimize buildup of particulate, but some systems use a pressure drop or timer-controlled back-flush system. The presence of the mesh pad and the water flowing through it normally place some resistance on gas flow. If the back-flush system fails or water distribution is not adequate, particulate buildup will occur in the bed and cause the pressure drop to increase.

Failure of the water spray system will usually cause a relatively rapid increase in pressure drop. A decrease in water flow rate to near zero flow (because of line or nozzle pluggage, increased water pressure, or an inoperative pump) also could be indicative of mesh pad pluggage resulting from failure of the water spray system. Insufficient water flushing volume or inadequate coverage of the mesh pad may cause a partial pluggage to occur over a longer time period. The existence of localized pluggage will cause an increase in the local gas velocity through the bed, which will increase the pressure drop and could increase the penetration and reentrainment of droplets and particles through the control equipment. When conditions permit and plant personnel allow, the access door to the mesh pad should be opened to determine if the spray nozzles are providing adequate coverage.

Low-energy venturi scrubbers also are very sensitive to improper water distribution in the throat area. In a practical sense, these low-energy scrubbers, which operate in the range of 6 to 10 inches pressure drop, are more sensitive to slight changes in pressure drop and water distribution than venturi scrubbers operating in the 18- to 45-inch range. The low energy associated with these scrubbers means the available impaction energy is low, and the poor distribution allows the impaction zone to be bypassed. These scrubbers typically use spray nozzles to achieve the gas-liquid contact required in the scrubber throat, as the low-energy impact may not be high enough to achieve gas atomization of the scrubbing liquid and good throat coverage. The relatively large particle size from this emission source, however, favors low energy input to the scrubber.

When inspecting low-energy venturi scrubbers, the inspector should check the gas flow rate, the scrubbing liquid flow rate, and the pressure drop. A small change in pressure drop (i.e., a change of 1 inch H_2O or more) should be considered significant, particularly if it is a decrease. It is difficult to discuss all of the possible malfunctions and their effect on performance. An increase in the pressure drop, liquid-to-gas ratio, or throat velocity, however, will generally improve performance, provided good liquid-to-gas contact is established in the scrubber. There is no easy method by which an inspector can establish whether good water distribution is being provided to the scrubber during normal operation unless separate valves are provided for each nozzle. If the scrubber is equipped with individual valving to allow for individual nozzle inspection and cleanout, each nozzle could be turned off, removed, inspected, cleaned (or replaced, if necessary) and returned to service. Turning off a nozzle will produce only a slight change in water flow rate and water pressure, but a change in pressure drop should be evident. If any nozzle is turned off without having any effect on the scrubber performance, that nozzle may be plugged or severely eroded and could be causing a maldistribution of the scrubbing liquor.

Many plants use a cyclone spray scrubber. This scrubber, actually a hybrid of a cyclone spray scrubber and a wet fan collecting device, is also a relatively low-energy device with typical pressure drops of 6 to 12 inches. The device takes advantage of particle inertia to promote impaction of the particle with the walls of the scrubber and the fan rather than using impaction of the particle onto water droplets in the gas stream (although this mechanism does play a role in the collection of the particulate). The water applied in this scrubber is applied primarily as a particulate-transporting medium once the particulate has reached a surface inside the scrubber. This scrubber is much less susceptible to pluggage or problems with improper water distribution than the scrubbers previously discussed.

The gas is usually introduced tangentially into the scrubber to remove the large particles and liquid droplets. A spin vane system also may be used at the inlet to begin the inertial separation process. Water is introduced into the scrubber to minimize pluggage and erosion of the spin vane as well as to provide a transport medium for the large particles collected in this

portion of the scrubber. The gas stream is then passed to a wetted radial-blade centrifugal fan, where all but the smallest particles are collected. Significant inertial forces are applied to the particles and water droplets, and their inertia tends to force them to the outer wall of the fan housing, where the liquid is drained from the scrubber. Some particles become impacted on the fan blades and are removed by the water applied to the fan wheel, and some small droplets are created by the shattering force applied by the rotating fan wheel. The remaining water droplets in the gas stream are then separated by cyclonic action through a spin vane separator.

Most of the energy applied to the particles is supplied by the rotation of the fan. The fan must provide the energy to overcome the energy losses of the ductwork, the cyclonic separation of the particulate and water droplets, and the acceleration of the water and particulate in the fan. The usual procedure is to determine the pressure drop across the entire scrubber from inlet to outlet. Using fan curves to calculate gas volumes through the scrubber is not possible because of the direct application of water to the fan blades. The use of Pitot traverses is usually not possible either because of the presence of cyclonic flow after the scrubber. Thus, the only indicators available to the inspector for assessment of performance are pressure drop, water flow rate to the scrubber, and fan motor current.

Although less susceptible to pluggage than mesh-pad scrubbers, pluggage that occurs in cyclone scrubbers will generally increase the pressure drop across the scrubber because of an unbalancing and increased resistance to gas flow through the scrubber. A decrease in liquid to the fan may not have much effect on the pressure drop across the scrubber, but such a decrease tends to be indicated by a decrease in the fan motor horsepower because of the apparent decreased "gas" density on the fan. Thus, while operating parameters are limited, those that are available may indicate scrubber performance changes.

As mentioned previously, the low energy input of the scrubber limits the ability of the scrubber to collect fine particulate; however, the particulate generated is generally large. Changes to smaller particle size because of changes in smelt characteristics or positioning of steam smelt shattering nozzles may cause problems in particulate collection efficiency, and when combined with other malfunctions, can cause performance to deteriorate significantly.

3.4 CAUSTICIZING DEPARTMENT

The two major emission sources in the causticizing department are the slakers and the lime kilns. The major source of particulate emissions in the causticizing department is the lime kiln which is typically controlled by a venturi scrubber. The malfunctions associated with lime kilns can generally be divided into those that are process-related and those that are related to scrubber performance and operation. Section 3.4.4 provides a detailed discussion of lime kiln and venturi scrubber malfunctions. Section 3.4.5 provides a discussion of the inspection procedures for lime kilns and slakers. In general, Level III inspections are usually limited by production schedules, availability of instrumentation, and accessability to process and control equipment.

3.4.1 Process Description

The economical operation of the alkaline pulping process requires the recovery and reuse of the sodium and sulfur compounds used in the cooking process. The liquor produced by the smelt dissolving tanks (green liquor) contains a mixture of sodium carbonate and sodium sulfide. Because sodium carbonate cannot be used in the cooking process, it must be converted to a usable form, NaOH.

The causticizing process involves the conversion of Na_2CO_3 to NaOH through the use of calcium oxide (CaO) (Figure 3-86).[2] Causticizing occurs in two steps: 1) reaction of the calcium oxide with water and 2) reaction of the calcium hydroxide with the sodium carbonate.

The first reaction, which is referred to as slaking, liberates a considerable amount of heat. The reaction is written as follows:

$$CaO + H_2O \rightarrow Ca(OH)_2 + 486 \text{ Btu/lb}$$

The second reaction, which is referred to as causticizing, yields sodium hydroxide and calcium carbonate. This reaction is written as follows:

$$Ca(OH)_2 + Na_2CO_3 \rightleftarrows 2NaOH + CaCO_3$$

In normal practice both these reactions occur simultaneously in the slaker tank. Because the second reaction is reversible, all of the sodium carbonate cannot be converted to sodium hydroxide. The completeness of the reaction is defined as the causticizing efficiency.

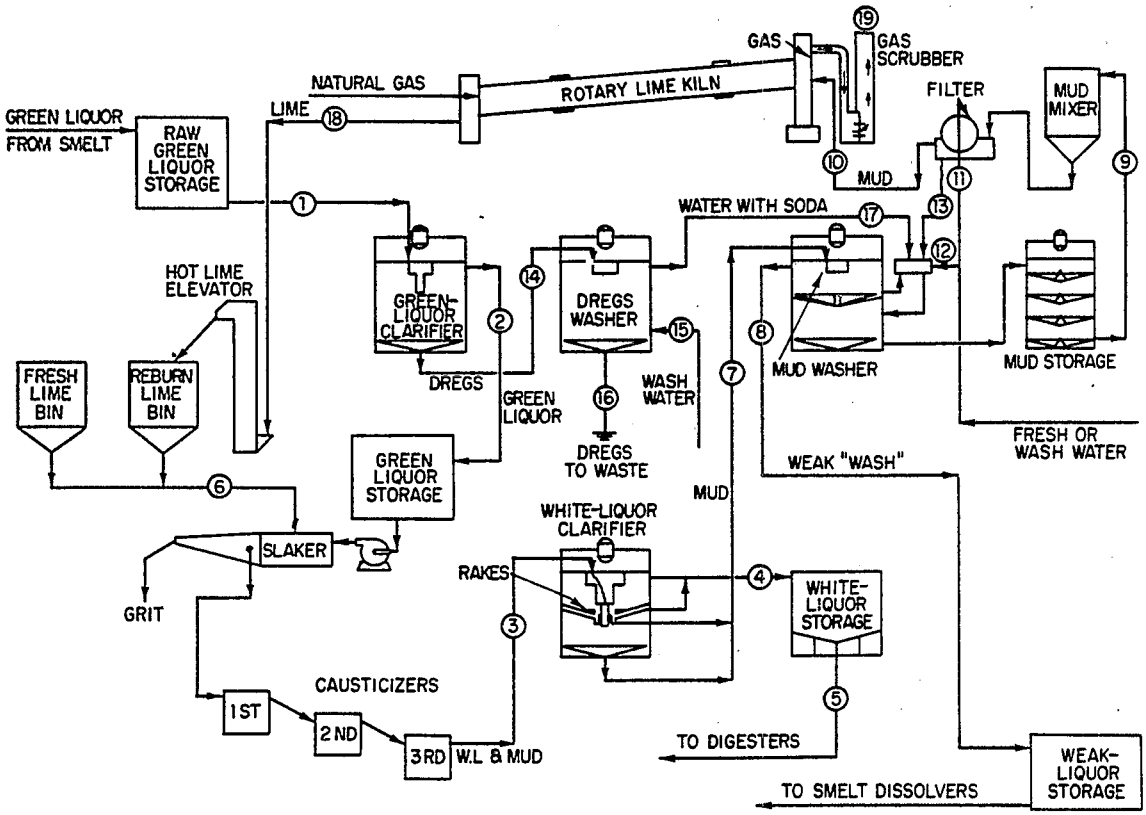

Figure 3-86. Typical causticizing flow diagram.[2,86]

The efficiency may be determined by the following equation:

$$\text{Efficiency (\%)} = \frac{NaOH}{NaOH + Na_2CO_3} \times 100$$

The efficiency is a function of the concentration of sodium sulfide in the green liquor. Higher concentrations of sodium sulfide reduce conversion efficiency. Unreacted compounds represent an unreacted circulating load in the liquor system. Sodium sulfide in the liquor hydrolyzes to form sodium sulfide and sodium hydrosulfide.[85]

For recovery of the calcium used in the slaking process, calcium carbonate is separated from the white liquor, dewatered, and disassociated under intense heat. The reaction is referred to as lime burning or calcining and proceeds according to the following reaction:

$$CaCO_3 \rightarrow CaO + CO_2$$

The causticizing process is composed of many subprocesses, including green liquor preparation, white liquor preparation, and lime mud handling.

3.4.1.1 Green Liquor Preparation--

Green liquor produced by the smelt tank contains insoluble impurities known as dregs, which must be removed. Dregs, which are composed of carbonaceous material, silica, and metallic sulfides,[2] are removed in the green liquor clarifier through settling and decanting. The solution is washed in the dregs washer, where the dregs are removed. The wash water is then pumped to the mud washer.[85]

3.4.1.2 White Liquor Preparation--

Clarified green liquor is pumped to the green liquor storage tank for introduction into the slaker. Calcium oxide is introduced into the slaker (reburn plus pebble lime) and reacts to form sodium hydroxide and calcium carbonate according to the previously stated reactions. The slaker contains a clarifying section in which unreacted material (grit) is removed by a mechanical rake (Figure 3-87).[87]

Lime feed to the slaker is generally no more than 85 percent CaO. The reaction is carried to equilibrium in the causticizers (up to three may be used). White liquor containing lime mud is pumped from the causticizers to

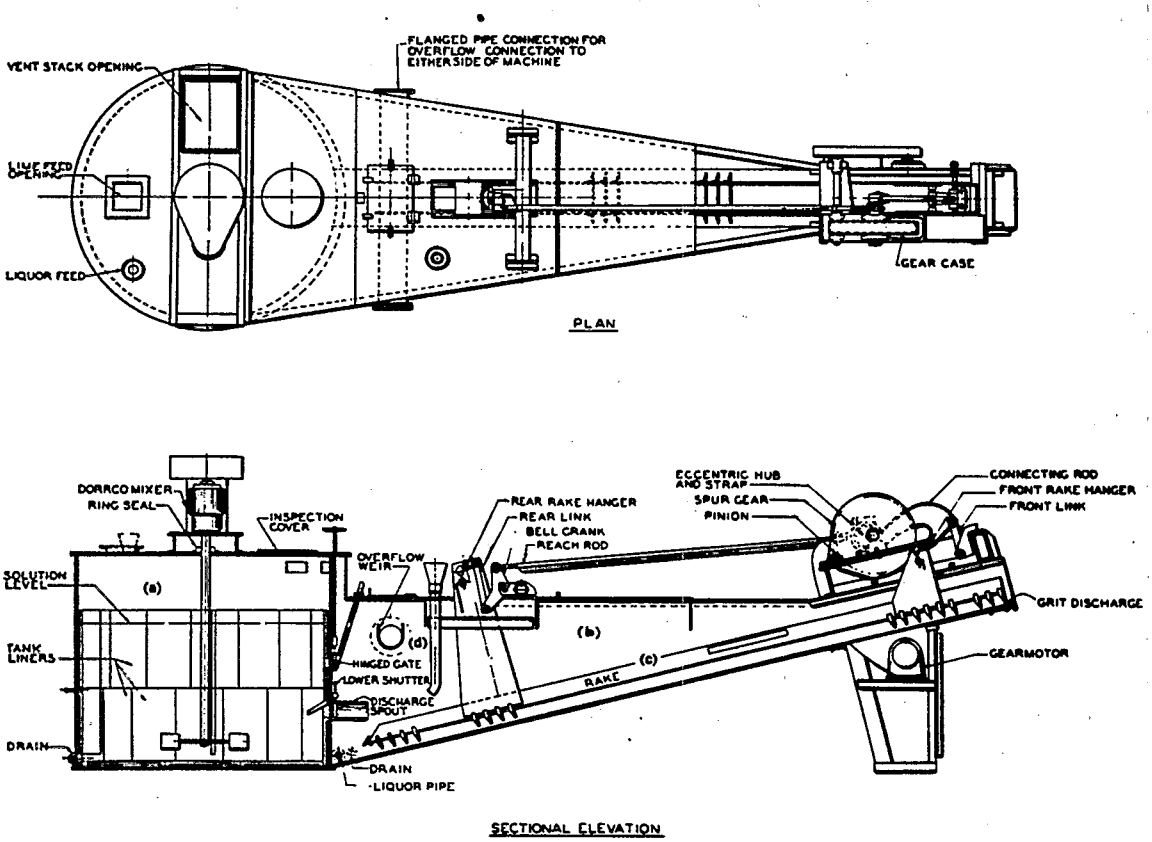

Figure 3-87. Slaker-classifier used in typical causticizing plant.[87]

the white liquor clarifier, where the mud and liquor are separated. The clarified liquor is then pumped to the digesters.

3.4.1.3 Lime Mud Washing--

Because the lime mud slurry contains sodium, which can adversely affect the calcination process, it is washed in dilution washers to reduce the sodium and sulfide content. Waste wash liquor is returned to the smelt dissolving tank as weak liquor. Lime mud washers may be decanting, belt-filter, precoat-filter, or pressure-filter washers. The lime mud must be dewatered before being introduced to the lime kiln. Centrifuge or vacuum filter dewatering systems are typical.

Final soda content is between 0.1 and 2.5 percent by weight (as Na_2O), and dewatered mud is between 60 and 70 percent solids.[88]

3.4.1.4 Calcining--

Calcining takes place on fluid-bed calciners or in rotary, direct-fired kilns. Rotary kilns used in kraft mills are 8 to 13 feet in diameter and 100 to 400 feet in length. The kilns slope downward from the feed end to the discharge end at an angle of about 3/4 in. per foot of length. The feed mud is moved through the kiln by slow rotation, usually between 0.60 and 1.33 rpm. The rate of material movement down the kiln is determined by the angle of the lime mud respose, kiln length, kiln slope, rotation speed, and kiln diameter.

Processes carried out in the kiln are water evaporation, mud heating, and calcination. Feed end temperatures are between 300° and $500^{o}F$ and discharge end temperatures are between 2000° and $2400^{o}F$.[2]

Energy for calcining is supplied by direct firing countercurrent to the material flow. Fuels are normally residual and distillate oils, natural gas, and coal, but waste oils, turpentine, and tall oil soaps also may be used.

Because of the presence of inert material in the lime mud, product yield (CaO) will not equal theoretical values. A typical mud may contain up to 15 percent inert material. Normal yield, based on inlet feed weights, may be on the order of 45 to 50 percent. In well-operated systems, fuel rates are in the range of 7 to 7.5 x 10^6 Btu/ton of product.

3.4.2 Emission Sources

Particulate emissions from the kiln are the result of particle suspension and entrainment due to the flow of combustion gases and carbon dioxide. Fine particulate is generated by the vaporization and condensation of sodium based compounds. The amount of fine particulate generated is related to the soda content of the feed.

Secondary and primary air for fuel combustion are provided at the burner end of the kiln. The burner-end hood is held at a slight negative pressure (0.1 in. H_2O). The air supply rate is controlled to maintain an exit gas oxygen content of 1.5 to 3.0 percent (7 to 15 percent excess air). Feed-end drafts can be significantly higher, depending on kiln diameter and length and the weight of chains used.

Table 3-26 presents a mass balance of a typical 260 tons/day kiln. The dust in the mud feed is recycled lime dust from primary dust collectors at the kiln exit.

TABLE 3-26. TYPICAL LIME KILN MASS BALANCE[89]

Lime mud feed, tons/day	
$CaCO_3$	417.857
Dust	28.331
Inerts	26.000
Water	101.366
Product rate, tons/day	
CaO	234.000
Inerts	26.000
Emission rate, tons/day	
$CaCO_3$	28.331
CaO	0.000
Heat input, 10^6 Btu	85.069
Heat input/ton product, 10^6 Btu	7.8525
Kiln size, ft	12 x 275
Kiln volume, ft^3	24,971
Kiln gas volume, acfm	68,000
Kiln gas temperature, ^oF	450°
Retention time, min	129.430

Lime mud crystals that precipitate from the white liquor in the causticizers have Na_2S that cannot be removed during mud washing. The removal rate depends on the sulfidity of the wash water and the ratio of soluble to insoluble sulfide in the mud. As a result, Na_2S is carried into the kiln, where it is exposed to an atmosphere containing approximately 18 percent CO_2. The CO_2, adsorbed on the mud surface, lowers the mud pH, which allows the sulfide to be converted to H_2S. The rate of H_2S that is released is a function of the Na_2S content of the mud, mud moisture, O_2 content of the gas stream, and the flue gas temperature. Figures 3-88, 3-89, and 3-90 show the effect of these variables on H_2S emission levels.[88]

3.4.3 Control

The control of particulate emissions from the lime kiln is provided almost exclusively by venturi scrubbers. Although impingement plate scrubbers and ESP's have been used in some locations, the venturi scrubber offers significant economic advantages. First, venturi scrubbers are more compact in size than other scrubbers of comparable efficiency, which means less capital cost and space requirements. Second, plugging is less of a problem than it is with other scrubbers. Although plugging and erosion of lines and nozzles are possible in a venturi scrubber, they can tolerate much higher levels of solids in the scrubbing liquor (10 to 20%) than that which can be tolerated by an impingement plate scrubber (1 to 3%). This usually means less clarifying, treatment, and makeup water requirements for the venturi scrubber. The single largest disadvantage of the venturi scrubber is the energy requirements to maintain a high pressure drop. Pressure drops between 20 to 35 inches H_2O, which require large fans and motors, are not uncommon for venturi scrubbers applied to lime kilns.

Most venturi scrubbers are constructed out of 316 and 316L stainless steel to prevent corrosion. Most designs also have a "flooded elbow" variable throat that allows for additional pressure drop control. The flooded elbow at the exit of the venturi scrubber divergent section provides a trough of water to capture the larger water droplets and particulate that exit the scrubber and prevents abrasion of the elbow at the turn. The throat of the venturi may be circular, rectangular, or oval, and the throat area can be

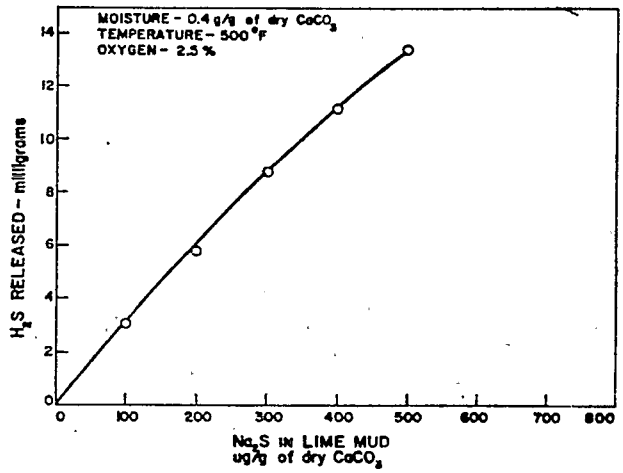

Figure 3-88. H_2S emission from the lime kiln related to Na_2S level in the lime mud.[88]

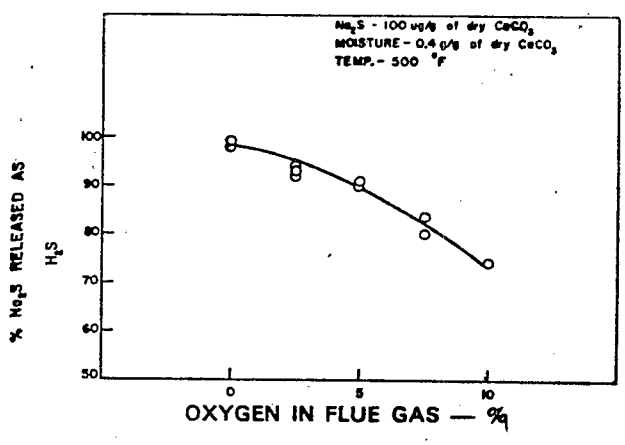

Figure 3-89. H_2S emission related to percent O_2 in the flue gas.[88]

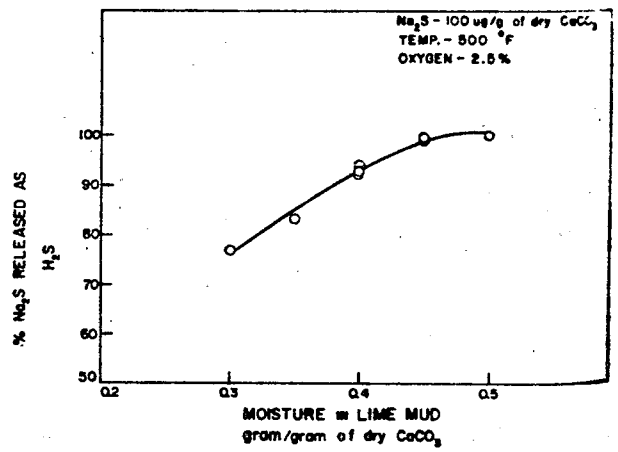

Figure 3-90. H_2S emission related to the moisture content in the lime mud.[88]

controlled by hinged plates in the throat or by a "bob" that moves up and down in the effective throat area. Pressure drop is usually controlled by controlling the throat area (hence, throat velocity), not by controlling the water flow rate to the scrubber.

Water is usually introduced to the scrubber through an overflow Weir system above the throat to avoid the use of nozzles, which may become plugged or eroded as a result of the solids in the scrubbing water. Throat coverage by the water is somewhat low because the water flows down the walls of the scrubber to the throat. This problem is more than offset, however, by the avoidance of nozzle problems. Some designs do use nozzles to introduce water droplets into the throat, but adequate maintenance capabilities must be provided for cleanout and inspection of the nozzles while the scrubber is operational.

Particle impaction on the water droplet is the dominant collection mechanism in the venturi scrubber. The high-velocity gas entering the throat (gas atomization) shatters the water introduced into the scrubber into "fine" droplets with a large effective surface area. These water droplets provide impact targets for the particles that cannot follow the gas streamlines around the droplets, and the particles collide with the water droplets.

Particles with diameters of 25 to 75 μm are much easier to collect than particles in the 5- to 10-μm range. Compared with the gas stream, the water droplets have essentially no velocity when introduced into the scrubber throat. Impaction is the major collection mechanism at the point of introduction into the scrubber throat. The velocity of water droplets, however, accelerates through the throat of the scrubber, and the effectiveness of the impaction mechanism decreases as the water velocity approaches the gas velocity. Smaller water droplets, higher throat velocities, higher liquid-to-gas ratios, and the resulting higher pressure drops usually mean higher collection efficiencies.

Diffusion is another collection mechanism in the venturi scrubber. This mechanism applies only to very fine particles, generally less than 0.05 μm, where Brownian motion influences the particle motion and particles tend not to follow gas streamlines. This mechanism is usually operative in the divergent section of the venturi where water droplets in the gas stream are travelling at nearly the same velocity.

Unfortunately, neither impaction nor diffusion is very effective in a certain range of particle sizes (0.1 to 1 μm). In this range, the particles are small enough to follow gas streamlines around the droplets, but are too large to allow diffusion to be an effective collection mechanism. If a significant portion of the particles entering the scrubber falls in this range, very high pressure drops may be required for adequate control of particulate emissions. Particles in this size range are the ones that most effectively scatter light and cause an observable opacity. Lime mud with a high soda content (as a result of inefficient washing) can produce a large quantity of particles in this size range. Increased pressure drop or process modification may be the only solution to this problem.

In many mills, emissions from the lime slaker are often ignored and no controls are provided. The emissions of lime dust and steam from the lime slaker and the causticizing of green liquor to white liquor can be controlled with low-energy scrubbers. When slaker emissions are controlled, the usual equipment consists of cyclone scrubbers or dynamic scrubbers using cyclone scrubbers with a wet fan arrangement similar to that used for smelt dissolving tank vents.

Scrubbers in this application usually need only 4 to 6 in. of pressure drop to be effective. The dominant collection mechanism is inertial separation; i.e., inertial forces on the particle cause it to separate from the gas stream, either in the cyclone scrubber or in the wet fan arrangement. Scrubbing liquid may be water, weak white liquor, or clarified green liquor. The scrubbing liquor is usually returned directly to the lime slaker for use in the lime recycle loop.

Scrubbers used on causticizers and lime slakers usually must be hooded or placed in covered enclosures to ensure adequate capture efficiencies and to minimize ventilation requirements. Scrubber components are normally stainless steel to minimize corrosion problems.

3.4.4 Malfunctions

The malfunctions and problems in the lime kiln area can generally be divided into those that are process-related (i.e., kiln operation) and those that are related to scrubber performance and operation. The process-related problems generally will influence the scrubber performance by affecting both the temperature and the particle size entering the scrubber. These problems may be the result of equipment failures, but they are most often caused by a process change.

The most common problem in the lime kiln process is inadequate washing of the lime mud before its introduction into the kiln. As discussed in Section 3.4.1, an interaction occurs as a result of material production rates, design parameters, yield efficiencies, and quantities of inerts in the caustizing area. From an air pollution control standpoint, problems begin when lime kiln mud from the causticizing of green liquor to white liquor is not washed effectively before it is introduced into the kiln. Residual sodium compounds, particularly sodium sulfide (Na_2S) and sodium hydroxide, remain in the lime mud after causticizing, and the mud must be washed and filtered to remove as many of these constituents as possible. Because it is impossible to remove all of these compounds, the lime kiln can become a significant generator of fine particles and H_2S if process conditions are right.

The sodium compounds are easily volatilized in the high-temperature flame end of the kiln, and they tend to leave the kiln as an uncondensed

alkali material. Unless the temperature of the gas stream is reduced before it reaches the inlet of the scrubber, most of the alkali will remain in the gas phase until it is quenched in the scrubber throat. Unfortunately, alkalies tend to form in the 0.1- to 1-μm range, which makes them difficult to collect in a venturi scrubber. One possible solution is to quench the gas stream by use of a presaturator. This allows the particles to grow before they enter the inlet of the scrubber. A better solution to this problem, however, may be to change the washing characteristics to reduce the sodium carryover in the lime mud.

The generation of fine particulate is a symptom of sodium-based compound carryover, but the principal compound in the lime mud that is related to potential H_2S emissions is Na_2S. (See Figure 3-88.) The conditions of high CO_2 levels and high temperatures can promote the breakdown of Na_2S to form H_2S.[88] The concentration of Na_2S in the lime mud is not the only variable that affects the generation of H_2S, however. The presence of oxidizing conditions (O_2) and the temperature also affect H_2S emission rates. Low temperatures or low O_2 contents enhance the formation of H_2S, whereas high temperatures and higher O_2 levels cause equilibrium shifts to form SO_2. Thus, short kilns with higher operating temperatures have less potential to emit H_2S than do longer kilns at the same production rate and lower temperatures. Kilns operating with oxygen enrichment to increase production rates may also produce less H_2S because of high operating temperatures in the kiln. If the O_2 at the exit end of the kiln is 0 to 5 percent, sufficient excess O_2 must be provided to avoid H_2S generation if residual oil is burned.

In addition to inefficient or insufficient lime mud washing, potential contamination can come from the washing liquor itself. If the incoming washing liquor is contaminated with sodium compounds, particularly Na_2S from other portions of the mill, then washing will be unable to reduce the content below the level of the incoming wash solution. The eventual solution to this problem may require repiping the supply lines to avoid the contaminating source(s).

Scrubber operating problems typically involve failure to maintain pressure drop, difficulty in supplying scrubber liquor to the scrubber, or a buildup of solids in the liquor. Because some of these problems are interrelated, identifying a specific problem can be difficult.

Most scrubber controllers use pressure drop as an indicator of performance. Failure to maintain the scrubber pressure drop at a preset point can cause operating problems at either extreme. High pressure drops can cause a fan limiting condition that prohibits the fan from moving the required quantity of gas. This results in fugitive emissions from the kiln, which operates under a slight negative pressure. Other failures result from the inability to maintain adequate pressure drop through the scrubber. This condition may be caused by failure of the pressure drop controller system, a water distribution problem, or the abrasion and erosion of scrubber internal components, all of which usually decrease scrubber performance. The latter two problems can usually only be identified by an internal inspection, whereas a failure in the controller system can normally be identified by a lack of response to a change in pressure drop set point.

The easiest method for controlling pressure drop in a variable-throat venturi scrubber is by controlling the throat area and the effective throat velocity. Although control of the water flow rate is an alternative means of controlling pressure drop (usually the only alternative in fixed-throat venturi scrubbers), it is not often used because it is more difficult and less sensitive to error adjustment. Controlling both the throat velocity and the water flow rate is generally not successful because of the interactive relationship of the two parameters on pressure drop. Attempting to control both parameters typically results in unacceptable or unstable oscillations in pressure drop or extremely slow response times.

Water distribution is usually not a problem in these scrubbers because nozzles are seldom used. When nozzles are used, however, provisions must be made to isolate and extract each nozzle for inspection, cleaning, and replacement during normal operation. Although inspection of each nozzle may cause a temporary maldistribution of liquid in the scrubber, it is better than a longterm failure. The maldistribution of liquid over a period of time can cause excessive abrasion of the throat components resulting from localized increases in velocity with abrasive particulate. Inadequate covered throat area will allow the gas to "channel" to the area of least resistance.

The solids levels in the recycled scrubber liquid can cause erosion of pump impellers and pipes. Wear of pump impellers can decrease the volume and velocity of scrubbing liquid to the scrubber, which can decrease scrubber

performance and cause pluggage of liquid supply lines. High solids levels can also cause nozzle pluggage in addition to nozzle erosion.

High solids levels also can cause problems with resuspension of particulate in the gas stream where the hot gas stream contacts the liquid at the throat. The evaporation of the liquid allows both the suspended and dissolved solids to be resuspended in the gas stream. The suspended solids level can be controlled by using a bleed-off stream with fresh water makeup to prevent high concentration levels. The problem also can be helped somewhat by quenching the gas stream with fresh water. Use of water with high dissolved solids content can allow the formation of a submicron fume that is difficult to collect at normal pressure drops. A bleed-off stream and fresh water makeup can also help to reduce problems with high suspended solids. A material balance typically shows that a site specific equilibrium level can be established at which particulate will begin to become resuspended in the gas stream. It is desirable to maintain solids levels below those levels that increase resuspension.

Malfunctions in the lime slaking area are generally limited to inadequate distribution of the scrubbing liquid in the scrubber. Because these are low-energy devices, the malfunctions tend to be related to scrubber pump failure or nozzle pluggage. The other failure mechanism is generally related to the inability to capture the emissions because hatches, covers, or hoods are not properly aligned.

3.4.5 Inspection Procedures

Control of the lime kiln particulate emissions is usually accomplished through the use of a venturi scrubber. Although other types of scrubbers are sometimes used, most of the newer lime kilns have venturi scrubbers operating in the range of 20 to 35 inches pressure drop. For this reason, the discussion of the inspection techniques in the lime kiln area is limited to venturi scrubbers.

As discussed previously, the lime kiln provides the second chemical recycle loop in the kraft pulping process, which allows green liquor to be converted to white liquor for use in digestion of wood chips. The particulate generated by the lime kiln is primarily calcium carbonate and calcium oxide. Energy requirements for the scrubber depend on the size distribution of the

particles leaving the kiln and entering the scrubber. Effective collection of smaller particles requires higher pressure drops. Scrubbers are usually fabricated of 316 stainless steel and are designed with a flooded elbow to minimize wear at the exit of the scrubber.

The three levels of inspection for this control device are defined. Ability to conduct a complete Level III Inspection is usually limited by production schedules, availability of instrumentation, and accessability to equipment.

Level I Inspection--The Level I Inspection of the lime kiln area has the same limitations as those for other wet plumes: 1) uncombined water vapor caused by evaporation in the scrubber usually causes the formation of a condensed steam plume, forcing observations to be conducted beyond the point of steam plume dissipation; 2) the selection of an observation point may not provide good or optimal background and contrast conditions for the establishment of the proper sun-source orientation; and 3) when several kilns and scrubbers are located close together, the plumes may interfere with each other. In some cases, the exhaust from several scrubbers may be combined in a single stack.

All scrubbers will not exhibit an attached plume at the stack exit, even though the gas stream is at saturated conditions. The energy input by the fan in high-energy scrubbers may provide just enough energy to revaporize the condensed water droplets and cause an unattached steam plume to form that may facilitate opacity readings at the stack exit.

A change in opacity from the baseline condition or a previously established operating condition indicates that some parameter or group of operating parameters has changed, which warrants a more detailed inspection of the equipment. Therefore, a change in opacity levels may be used to establish the need for conducting more detailed inspections. Without further operating data, however, the cause of the opacity change is difficult to assess with a Level I Inspection.

Level II Inspections--The Level II Inspection entails a combination of visible emissions observation and a physical check of the air pollution control equipment by use of plant instrumentation to confirm its operation. Usually the inspector does not take measurements in a Level II Inspection.

If instrumentation is properly located and operated, however, the data provided can be useful in evaluating the performance of the venturi scrubber. Operating data from both the process equiment and the control equipment should be obtained during the inspection. Typical data that should be collected include kiln production rate (as CaO), lime mud feed rate, fuel firing rate, kiln exit temperature, kiln rotation rate, scrubber inlet and outlet temperatures, scrubber water flow rates, and pressure drop across the scrubber throat.

The quantity of flue gas produced by the lime kiln is related to the kiln production rate, the conversion efficiency of $CaCO_3$ to CaO, the quantity of fuel fired in the kiln, and the quantity of excess air allowed into the kiln during combustion. The oxygen levels are often monitored at the kiln exit to assist in the firing of kiln. In addition, if the kiln is undersized with respect to the rest of the plant capacity and the kiln becomes the limiting equipment in the mill production rate, oxygen enrichment of the combustion zone may sometimes be used to increase the heat release rates in the kiln, which increases the production rate. Because all these parameters vary on a daily basis, the variable-throat venturi scrubber is normally used to control particulate emissions. Control of both water flow rates and the throat area usually results in an unstable controlling operation because of the effect the reaction and interconnection of the two operating parameters has on pressure drop. If a constant pressure drop is maintained across the scrubber regardless of production rate, the control equipment will maintain its collection efficiency for smaller particles at both normal and reduced production rates. At reduced production rates, the uncontrolled particulate concentration also may be lower because of reduced gas velocities through the kiln. The inspector should be concerned with any significant change in scrubber pressure drop and/or any large change in scrubber water flow rates.

The inspector should check the operation of the scrubber pumps, any water pressure indicators, and the water flow into any settling pond or tank. Because not all sources will be equipped with water flow rate indicators, this check will ensure that water is flowing into scrubber; however, it will not ensure that water is being evenly distributed in the scrubber throat or that the flow rates are correct.

A significant change in both the visible emissions and the values for pressure drop or water flow rate usually indicates a change in the mechanical operation of the scrubber. Examples of mechanical changes might include a change in controller set point for pressure drop, a change in liquid flow rate due to a change in valve settings, pump wear, plugged nozzles, or wear and abrasion of the scrubber throat. Changes in opacity without changes in pressure drop or water flow to the scrubber, however, may be related to a change in process operation or to chemical balances in the scrubber liquid. This condition would be caused by changes in particle size distribution rather than by a mechanical change in energy input to the scrubber. The additional measurements required to evaluate the nature of these changes would constitute a Level III Inspection.

Level III Inspection--In addition to the aspects of the Level II Inspection, a Level III Inspection of the lime kiln involves supplemental measurements to assure the collection of correct scrubber data. The values obtained during the inspection are compared with those of the design and/or baseline scrubber parameters to assess scrubber performance. Some measurements are difficult to make, however, because of the design aspects of the scrubber. As a result, the inspector must decide which values should be obtained on the basis of the type of evaluation to be performed.

Two important parameters (pressure drop across the scrubber and visible emissions) have already been discussed. A change in these parameters may indicate the need for further investigation. Although plant instrumentation should provide a reading of the pressure drop, the inspector should also measure the pressure drop to confirm the accuracy of this reading. Measurement of the pressure drop across the scrubber should be taken just before the converging section and just after the diverging section of the venturi scrubber. Because a measurement after the cyclone separator will include static pressure loss associated with mist elimination in the gas stream, the value would not represent the energy expended in the throat of the venturi scrubber. If the design of the scrubber includes a flooded elbow, measurement of the pressure after the throat may not be possible. Measurements taken just beyond the elbow will provide reasonably good data if the inspector allows for about a 1-in. loss associated with the turning of the gas stream at the elbow.

Because the particulate collection efficiency improves with higher throat velocities (particularly at smaller particle diameters), the gas volume through the scrubber is a useful parameter. Although it is difficult to know what the effective throat area is during operation, a good estimate of the range may be calculated for most scrubbers. Unfortunately, it is difficult to determine gas volume through a venturi scrubber. The use of an F-factor method is not very successful because of the absorption of CO_2 into the scrubber liquor. Many stacks have tangential inlets that introduce cyclonic flow in the stack, but installing a fan after a cyclone separator usually destroys any cyclonic flow present after the separator. Because many designers use the stack as a final mist eliminator, however, the gas is introduced tangentially. Unless flow straightening devices are used, the cyclonic flow will render velocity traverses by a Pitot tube inaccurate. The measured velocity will usually have a positive bias unless the cyclonic flow is severe, in which case the bias will be negative. Thus, a Pitot traverse may not be possible.

The alternative, the use of fan curves, also may not be acceptable for several reasons. First, the gas stream is usually saturated with water vapor, which decreases gas density. Second, the presence of CO_2 and water droplets increase the effective density of the gas stream. If it is assumed that no water droplets are entrained in the gas and that the decrease in gas density because of water vapor is offset by the presence of CO_2, the gap must be treated as if it were air at the scrubber outlet temperature. This approach will provide an estimate of gas volume through the scrubber only if no water is injected into the fan.

Another reason fan curves may not provide acceptable results is because of cyclonic flow from the cyclone separator at the inlet of the fan. Fan curves and tables are based on smooth transitions and no cyclonic flow into the fan inlet. The presence of cyclonic flow at the fan inlet in the direction of fan rotation will change both the static pressure/volume relationships and the horsepower/gas volume relationships much the same as a reduction in fan speed would. This change occurs because the difference in angular velocities between the fan rotating speed and the gas rotation speed is reduced. If the gas is travelling cyclonically in the same direction as the fan rotation, less energy is required to accelerate the gas to the rotating discharge velocity

of the fan. The inspector cannot ascertain the effect on fan performance without making in-depth tests that are beyond the scope of this guide and outside the normal inspection procedure.

If a Pitot traverse can be performed before the gas enters the scrubber, an estimate of the gas through the scrubber can be calculated by assuming that the gas is adiabatically cooled to saturated conditions. The procedures for this calculation may be found in any engineering handbook. Basically, the calculation includes the decrease in actual gas volume due to cooling and the increase in gas volume due to evaporation of liquid water to water vapor. If the volume through the scrubber is assumed to be the inlet value at the high temperature, the predicted throat velocity would be too high. A simplifying assumption is that the gas stream is cooled and saturated immediately upon entering the scrubber throat and the resulting gas volume is that which passes through the throat area to yield an average throat velocity. If this value is calculated, it should be compared with design values (if available). The nominal values for throat velocity are between 5,000 and 15,000 cm/s, with values between 10,000 and 15,000 cm/s most common for high-energy venturi scrubbers.

Another useful parameter in the determination of venturi scrubber performance is the liquid-to-gas ratio. To find this value, the inspector must have both the volumetric flow rate of the scrubbing liquor through the scrubber and the flue gas volume. He or she must rely on plant instrumentation to determine the liquid flow rate, as no inexpensive portable instrumentation is available. Plant personnel should periodically check the calibration of this instrumentation to increase the overall confidence in the data. (The usual method is to calculate the ratio between the liquid volume and the gas volume.) Typical values for the lime kiln scrubber are 10 to 20 gallons/1000 acfm of gas. Higher values usually mean better performance and higher pressure drop. Physical measurement of the liquid stream is not possible because of the large quantities involved (between 600 and 1500 gallons per minute).

As with other scrubbers, good liquid distribution across the throat is necessary to provide adequate scrubber performance. Improper coverage because of nozzle pluggage will allow a portion of the gas stream to bypass the gas-liquid contact zone and result in a lower pressure drop and lower

collection efficiency. Water flow may remain essentially constant, but the maldistribution will probably prevent the scrubber from reaching its normal or maximum pressure drop. Most larger scrubbers are not equipped with spray nozzles so as to avoid this problem. Also, the use of internal overflow weirs allow the increasing velocity at the throat to atomize the liquid to droplets.

Even when pressure drop and water flow rate are at the normally accepted levels, there are two items that can cause an opacity problem: total suspended solids and total dissolved solids in the scrubbing liquor. Because the kiln is a high-temperature source (exit temperatures of between 400° and $650^{o}F$), the resuspension problems associated with high solids levels may be magnified by this process.

After scrubbing, the water contains captured particulate that must be processing further. Because it is ususally not economical or permissible to use the water on a once-through basis, the water is recirculated through the scrubbing system. One of the advantages of a venturi scrubber is that it will tolerate much higher levels of suspended solids than other scrubbers (e.g., an impingement scrubber) because it is less susceptible to pluggage. Adequate retention time, however, must be provided in the settling or clarifying tanks for particulate settling and for maintaining the suspended solids at an acceptable level (15 to 30% by weight). If excessive levels of suspended solids are allowed to build up, wear of scrubber components such as pipes, pumps, and nozzles (if any) will increase. In addition, the particle may come out of liquid suspension during vaporization of the liquid in the scrubber throat and form a particulate that can pass through the scrubber to the stack. An equilibrium is eventually established, as the particulate must exit the scrubber either through the clarifying step or through the stack.

Some of the solids dissolve and go into solution with the scrubbing liquid. The quantity that goes into solution is limited by the solubility of the various compounds. The actual level of dissolved solids may be governed by the solubility limit, but a equilibrium level is usually established by the addition of makeup water to account for water losses in the scrubber. When the dissolved solids reach a certain level, the water vaporization in the scrubber throat causes the formation of a very fine particle that produces a visible opacity. If a change in opacity is noted, water samples

should be obtained to determine if the suspended and dissolved solids levels also have changed. Although the dissolved solids level is site-specific, values of 3 to 5 percent or less by weight should prevent the generation of fine aerosols.

Part of the problem with solids involves evaporation of the scrubber liquor and the suspension of particles in the gas stream. Although the evaporation cannot be prevented, proper clarifier retention time, adequate water bleed-off and makeup rates, and possible scrubber changes can significantly reduce the opacity problems that may be associated with the solids levels.

If all the parameters compare favorably with the previously established values (design or baseline test conditions), the performance of the scrubber is likely to be similar. Changes in parameters should help identify the problem or indicate that performance has improved. The key parameter is the scrubber pressure drop and its relationship to the other operating parameters.

3.5 POWER BOILERS

In most mills, the kraft recovery boiler could produce a significant portion of the mill's energy requirements for process steam and electricity. Because its primary responsibility is chemical recovery, however, the recovery boiler does not have a very high thermal efficiency. Therefore, power boilers are used to supplement the steam and electricity requirements. Based on a number of economic and regulatory considerations, the number of boilers and the type of fuel burned varies from mill to mill. A given mill may have anywhere from one to eight power boilers burning wood, oil, coal, natural gas, or a combination of fuels. This subsection discusses their potential operating problems along with the major sources of emissions, available control techniques, potential malfunctions, and inspection techniques for power boilers and associated control equipment.

The major emissions from power boilers are particulate matter, SO_2, NO_x, and CO_2. The quantity of each pollutant produced is a function of the fuel characteristics, the firing method, and the combustion characteristics for each boiler. In general, only coal- and bark-fired boilers have particulate matter control devices. Although there may be numerous malfunctions that can

occur in a power boiler, the two most common operational problems are fuel quality and establishment of proper excess air levels.

As with the inspection of the recovery boiler, the inspection of the power boiler involves the identification and evaluation of those operating parameters or variables that indicate operation outside the norm for both the boiler and the control device. Section 3.5.5 discusses in detail the major points to be covered in inspecting both the boiler and the various types of particulate matter control devices. Table 3-27 on page 277 identifies the particular parameters and variables that should be recorded during a Level III Inspection of the power boiler.

3.5.1 Process Description

The power boiler is designed for the efficient production of high-pressure steam for conversion into electricity through a turbine/generator; the steam exhausted from the turbine is used for process operation (process steam heating, operating turbine driven equipment, etc.). Because steam production is the only responsibility of the boiler, it can be designed to maximize heat transfer and to minimize heat losses through the stack or other sources.

Regardless of the fuel, the basic combustion and heat transfer mechanisms are the same in the various types of boilers. Fuel characteristics dictate such boiler design considerations as furnace volume, heat release rate, heat transfer surface areas, and tube spacing. The simplified combustion process involves the mixing of fuel and combustion air in the furnace. The addition of adequate combustion air, mixing (turbulence), and a sufficiently high temperature cause the fuel to ignite, and the heat generated by the oxidized fuel is released in the furnace zone. Some of the heat is used to sustain combustion, but most of it is used to transfer heat to the boiler tubes and to generate steam.

Three heat transfer mechanisms are important to the boiler operation: radiation, convection, and conduction. In the furnace zone where the fuel is combusted, radiation is the dominant heat transfer mechanism. The heat absorbed by the tubes is conducted through the tube to the boiler water to produce steam. As the combustion flue gas leaves the furnace zone to pass through the other tube sections, the gas is cooled because of radiant heat

loss and the radiant heat transfer decreases. The gas temperature drops from 2200° to $2400^{o}F$ in the flame zone down to 1500° to $1600^{o}F$ before the gas enters the boiler tubes, where convective heat transfer dominates. The zones where the superheater, economizer, and air preheater are placed rely primarily on convective heat transfer.

The boiler feedwater enters the economizer under pressure (typically 650 to 1100 psi) to be preheated by the flue gas passing around the economizer tubes. The feedwater then enters the steam drum arrangement from which it passes to the tubes in the furnace walls. As the preheated feedwater passes through the tubes in the radiant heat transfer zone, it boils and forms steam. When the steam and entrained water droplets leave the furnace walls, they enter steam drums that separate the water droplets from the steam. The steam, which is saturated, is then passed through the superheater to extract more heat from the combustion gases. The superheater is needed not only to maintain boiler efficiency but also to prevent the turbines from operating with a combination of steam and water droplets. The superheater is located at the boiler combustion zone outlet, where both radiant and convective heat transfer occur.

The steam exiting the superheater is typically limited to a maximum operating temperature of $1050^{o}F$ because of the boiler tube metal required to maintain the discussed pressure ranges. At most mills, all the superheated steam is piped to a common header that is fed to one or more turbine/generators for electrical power generation. The energy extracted by the turbine reduces the temperature and the pressure of the steam. Typical exit pressures are between 150 and 250 psig to prevent formation of water droplets in other equipment where steam is used (above the saturated steam conditions). The loop is completed when the steam is cooled, condensed, and recycled back to the boiler economizer.

Not all boilers are equipped with economizers. Multiple-drum boilers, which have one or more steam drums and several mud drums, usually allow the water to boil in the furnace tube walls and the tubes between the mud drums and the steam drums. The steam drums are still used to separate the steam from the water droplets, and a superheater section is still used to increase the energy content of the steam. The thermal efficiency of boilers operating without economizers, however, is generally not as high as these equipped with

economizers. As a compromise to reduce the thermal stack losses, most boilers are equipped with air preheaters that preheat the combustion air before it is introduced into the furnace; this improves combustion efficiency and increases the radiant heat released in the boiler furnace zone. Specific design features for each type of boiler are discussed.

3.5.1.1 Gas- and Oil-Fired Boilers--

The design of boilers for firing oil or gas are very nearly identical, and most boilers can fire either fuel interchangably. These boilers are usually physically smaller than boilers having the same production rate but firing solid fuels because the acceptable heat release rates and velocities through the tube banks are higher. The significant quantities of ash associated with solid fuels accounts for the differences in physical design.

The oil/gas boilers used in paper mills can be either shop-assembled or field-assembled, depending on the steam requirements. Shop-assembled "package" boilers are usually selected when additional steam requirements are small. These boilers are generally in the 25,000 to 250,000 lb/h steam range. They are small, easily shipped by railroad, and relatively inexpensive. When larger steam capacity is needed, field-erected boilers in the range of 250,000 to 600,000 lb/h of steam are usually the norm. As the name implies, the boiler components are assembled at the construction site, but in some cases modular components can be shop assembled to reduce the cost.

The fuel characteristics and the assembly method affect the design parameters for oil/gas fired boilers. Typical parameters of importance are the heat release rates (based on furnace volume and radiant heat transfer area), flue gas velocity through the tubes, and tube spacing, all of which also affect the physical size of the boiler. Typical heat release values for oil/gas boilers are 200,000 Btu/h/ft^2 of effective projected radiant heat transfer area, regardless of whether the boiler is shop- or field-erected.[90] The shop-erected boilers, however, generally have volume-related heat release rates approximately twice those of field-erected units. Field-erected boilers are generally designed with heat release rates of 25,000 to 50,000 Btu/h/ft^3 of furnace volume, whereas shop-assembled package boilers will be designed at 50,000 to 100,000 Btu/h/ft^3.[90] The type of fuel, size limitations, and steam requirements will affect the value selected. Natural gas and distillate

oils have higher values. The use of somewhat "dirtier" fuels like No. 6 residual oils will dictate lower values.

The type of fuel also affects the acceptable velocity through the tubes and the tube spacing. Typical velocities through the tubes are approximately 100 ft/s because the flue gas contains very few abrasive particulates. Tube spacings are generally 1 to 2 in., depending on the location in the boiler. Somewhat wider spacings are provided when residual oil is fired. Draft losses from the close tube spacing and high velocities are usually controlling factors.

3.5.1.2 Coal-Fired Power Boilers--

The use of field-erected coal-fired boilers is the alternative to firing premium fuels (oil and natural gas) in a power boiler. Coal-fired boilers are physically larger than their oil/gas counterparts of similar capacity. They can be stoker-fired or pulverized-coal-fired, depending on the steam requirements. In most mills, these boilers are either a spreader stoker with travelling grate or pulverized-coal-fired unit.

Spreader-stoker boilers are used when a combination of coal and wood is fired. Spreader-stoker boilers are limited by grate width and depth, grate heat release rates, and furnace heat release rates. Practical stoker boiler designs limit the size of the boiler to between 50,000 and 400,000 lb/h steam. Typically the boilers range in size from 100,000 to 250,000 lb/h steam. If the boiler is coal-fired, up to 450,000 lb/h is possible (although these are usually low-pressure, 150 psig steam).

The physical limitation of most stoker boiler designs is a combination of grate size and grate heat release rates. For a spreader-stoker, the practical limitation for the grate size is approximately 21 ft in depth. For higher heat release, however, the furnace must get even wider. Grate widths of 32 feet or greater present a physical limitation on the boiler size. The grate heat release rates can usually be in the range of 500,000 to 750,000 Btu/h/ft^2 of grate area.[90] Lower values are more conservative and are consistent with unusual design. The higher value is a maximum, and operation at this level may cause operational difficulties if coal is not of the correct quality. The furnace heat release rates for spreader-stokers are limited to 25,000 to 32,000 Btu/h/ft^3 of furnace volume; the lower value is more conservative.[90] Coals that have lower ash fusion temperatures will generally require lower heat release rates.

When the steam capacity of the spreader-stoker is inadequate and coal quality problems are expected, or when combination firing of coal with wood is not planned, the selection of pulverized-coal (p-c) firing may be an alternative. From an economic standpoint the break-even point for cost between stoker and pulverized-coal-firing is in the 200,000 to 250,000 lb/h range. Spreader-stokers rely on burning the coal on the grate, whereas in p-c firing, the dry, finely ground (70% through 200 mesh) coal is burned in suspension.

Although nearly any type of coal can be burned in a p-c boiler, the boiler must be designed to handle the kind(s) of coal it will normally burn. Differences in the ash content, the ash fusion temperature, the heat content, and grindability of the coal will affect the overall design of the boiler. Unlike oil/gas firing, abrasion and slagging are of concern in both the radiant furnace zone and the convective boiler passages. Therefore, p-c boilers are designed with the aim of preventing slagging. In general, boilers firing a Western subbituminous coal with high slagging possibilities will be larger than a comparable-capacity boiler firing a cleaner coal. Heat release rates must be kept below the slagging temperatures, and this requires larger furnace volumes for a given capacity.

Three parameters usually help define p-c boiler furnace dimensions: the volumetric heat release, the heat release per ft^2 of projected radiant heat transfer surface, and the plane area heat release (10^6 Btu/h/ft^2 of plane area of the furnace). Higher heat release values are acceptable for low slagging coals. Typical values are 22,000 Btu/h/ft^3 for volumetric heat release rate, 120,000 Btu/h/ft^2 of effective radiant transfer area, and 2.1×10^6 Btu/h/ft of boiler plane area. Values are lower for coals with high slagging potential. Typical values are 15,000 Btu/h/ft^3, 70,000 Btu/h/ft^2, and 1.4×10^6 Btu/h/ft^2 plane area.[90,91] These numbers govern the physical size of the furnace zone.

The velocity through the convective tube banks in a coal-fired boiler (typically 50 ft/s) is approximately one-half that in oil/gas boilers. Tube spacings also are much larger, with spacings ranging from 16 inches in some superheaters down to about 2 inches in the boiler outlet zones. Fouling, plugging, and tube abrasion are of some concern when firing solid fuels, however.

3.5.1.3 Wood-Fired Power Boilers--

Wood-fired boilers, which are normally the travelling-grate type, usually burn the bark from the debarking drum. Wood may also be fired in combination with coal or in a spreader-stoker using gas or oil. The heat-release limitations for spreader-stokers described in the coal-fired boiler section are generally applicable to bark boilers. The bark is generally mass-fed onto a travelling grate, and the depth of the bark and the grate travel rate control the steam production rate. As with a mass-fed travelling grate boiler, the response to load changes is slow. Firing of supplemental fuel will aid in the swing-load capabilities of this kind of boiler. The boiler load is usually limited to between 75,000 and 200,000 lb/h.

3.5.2 Sources of Emissions

Emissions from all power boilers consist primarily of particulate, SO_2, NO_x, and CO_2. The quantity of each pollutant produced is a function of the fuel characteristics, the firing method, and the combustion characteristics for each boiler.

3.5.2.1 Gas-Fired Boilers--

Gas-fired boilers are usually the simplest boilers from the standpoint of design and operation. Emissions generated by this "clean fuel" are generally limited to NO_x. Because the dominating factor in the production of NO_x is the flame temperature and the level of excess air, staged combustion is used to meet excess air requirements and to reduce flame temperature by reducing turbulence in the combustion zone. This diffusion-limited flame is much more acceptable in reducing NO_x emissions than highly turbulent, high-excess-air flames. Low excess air levels ($\sim$ 15%) also promote higher boiler efficiencies. The emissions of CO, hydrocarbons, and particulate are negligible if complete combustion occurs.

3.5.2.2 Oil-Fired Boilers--

Fuel oil combustion generates emissions of particulate matter, SO_2, and NO_x. Although combustion characteristics are very similar to natural gas firing, the potential for pollutant generation is greater. The two most commonly used oils are No. 2 distillate oil and No. 6 residual oil. Normally No. 2 oil contains less residual ash and sulfur than the No. 6 oil.

To a certain extent, combustion characteristics control the level of particulate emissions from oil-fired boilers. The oil must be atomized and mixed with combustion air as it enters the furnace zone. Improper atomization mixing will result in poor combustion and the generation of particulate in addition to that present in the oil as a residual ash. The particulate generated as a result of poor combustion will be a combination of fine carbon particles and other unburned hydrocarbons. Inadequate excess air levels will cause similar problems. Particulate generation rates will otherwise be proportional to the ash content of the oil.

As with gas-fired boilers, NO_x emissions from oil-fired boilers are generally controlled by combustion modification. Staged-combustion and diffusion-limited flames reduce peak flame temperature and NO_x formation by limiting excess air. Highly turbulent flames with high excess air levels promote higher levels of NO_x emissions. In addition, some oils contain residual nitrogen compounds that can tend to increase NO_x production. In general, tangential or corner firing of oil-fired boilers produces less NO_x than wall-fired boilers.

The generation of SO_2 is generally proportional to the level of sulfur in the fuel, and most of the sulfur is converted to SO_2 upon combustion. With sufficiently high temperatures and excess air some of the SO_2 will convert to SO_3 and form sulfuric acid mist upon cooling and contact with water vapor. This problem is more serious with residual oils that contain vanadium (generally 75 ppm or more). The acid mist forms very small, light-scattering particles that can cause a significant opacity problem. Acid smuts may also be produced when acids condense on boiler heating surfaces. Control of excess air, switching from high-sulfur/high-vanadium oils, or the use of an inhibitor to reduce the catalytic action of vanadium on sulfur are the usual control options.

3.5.2.3 Coal-Fired Boilers--

Coal-fired boilers produce significant quantities of particulate, sulfur oxides, and nitrogen oxides. The level of each is related to the firing method, combustion efficiency, the pollution-control equipment, and the fuel characteristics.

The level of sulfur oxides produced is generally proportional to the sulfur content in the coal. The formation of an acid mist is generally not a problem unless the sulfur content of the coal is above 2.5 percent. The sulfur content of the coal will also affect boiler design and operating characteristics (sulfur affects the ash fusion temperature) and the choice of particulate control equipment. The acid mist problem can be controlled, in part, by the control of boiler excess air.

The generation of NO_x is strongly related to the combustion method and combustion controls. Free nitrogen in the coal also can be a significant contributor to overall NO_x emissions. Most NO_x controls deal with the control of combustion air to the burners (p-c firing). Staged combustion or off-stoichiometric firing produces lower peak flame temperatures by limiting the amount of air available for combustion. This generally produces longer flames that are diffusion-limited, which means longer reaction times at lower temperatures for complete combustion. Combustion air is provided in excess of stoichiometric requirements (usually 15 to 30 percent), but the air is gradually introduced to the flame. It is very difficult to minimize the quantity of NO_x because of nitrogen in the fuel. In general, tangential or corner-fired p-c boilers will produce less NO_x than wall-fired units.

Control of NO_x in stoker boilers is also a function of controlling both overfire and underfire air. In addition, the proper placement of overfire air nozzles is critical to the overall efficiency of the boiler. The operating principle, however, is the same. Generally, the underfire air should be below the stoichiometric rate, which produces a zone in the top of the fuel bed that is oxygen-deficient and causes distillation and reduction of volatiles from the bed. When the underfire gases contact the overfire air at the high temperatures, combustion is completed. The overfire air should provide just enough excess air and turbulence to complete the combustion process without causing excessive stack heat losses.

The particulate emission rate is a function of the coal ash content and the firing method. Pulverized-coal boilers will produce more uncontrolled ash than stoker boilers because the coal is fired in suspension. Between 70 and 85 percent of the ash in the coal will exit the boiler as fly ash. Considerably less ash will exit with the flue gas from a stoker-fired boiler (approximately 30 to 50%). In addition, the particulate produced by stoker

boilers tends to be much coarser than the ash from p-c boilers and will generally contain considerably more combustible materials. These factors affect the selection of control equipment for these boilers.

3.5.2.4 Bark Boilers--

The characteristics of bark boilers are similar to those of coal-fired stoker boilers except with regard to sulfur oxides emissions. Because bark contains virtually no sulfur, emissions of SO_2 are negligible when bark is fired alone. Thus, nitrogen oxides, particulate, and unburned hydrocarbons are the potential emissions from bark boilers.

Particulate emissions from bark boilers are relatively low because the bark is mass-burned on the grate rather than "thrown" on the grate. Also, the ash quantities in bark can be significantly less than those in some coal supplies. Thus, overall potential emissions are less when compared with coal firing alone.

Nitrogen oxide emissions potential and control for bark boilers are similar to those for coal stoker boilers. More care is required, however, for proper adjustment of the overfire and underfire air, because the high moisture content of the bark (up to 50 percent by weight) can cause combustion problems. It should be noted that this moisture may be beneficial from a NO_x standpoint because it lowers the effective flame temperature. Good overfire air distribution and sufficient residence times in the furnace zone, however, are needed for complete combustion. This can make control of NO_x and particulate emissions very difficult. In addition, the unburned hydrocarbons will tend to form very fine, sticky particulate. Using natural gas or oil as a supplemental fuel over the fuel bed sometimes minimizes these problems provided boiler design heat release rates are not exceeded.

3.5.3 Control Techniques

The kind of control selected for power boilers depends on fuel type, the method of combustion, fuel and ash characteristics, and the costs of the equipment options available to meet the prescribed emission requirements.

3.5.3.1 Gas-Fired Boilers--

No add-on control equipment is applied to natural-gas-fired boilers because particulate and SO_2 emissions are negligible and NO_x is controlled by combustion modification.

3.5.3.2 Oil-Fired Boilers--

Depending on the emission requirements, oil-fired boilers may have add-on particulate control equipment. Oil-fired boilers that fire No. 2 distillate oil do not require particulate controls. Boilers that fire residual oil efficiently also may not require controls. If controls are required, they usually include multicyclones, small ESP's, and scrubbers. Multicyclones are generally effective in collecting particles down to 5 to 10 μm in size at 3 to 4 in. pressure drop. Unfortunately, multicyclones are effective in a very narrow range of gas volume around the design point. Small ESP's also can be used, but the initial capital cost is high compared to that of other control options. Scrubbers also may be used, but high operating costs can discourage this option. One extra feature that a scrubber can add is its ability to remove a portion of the SO_2 emissions, especially with the use of an alkaline scrubbing medium.

3.5.3.3 Coal-Fired Boilers--

Coal-fired boilers require the application of control equipment to meet particulate emission standards. Multicyclones, scrubbers, ESP's, or fabric filters are acceptable control techniques for spreader-stoker boilers. These same control options are applicable to p-c fired boilers except that the multicyclone would be used only in combination with either an ESP or fabric filter, not as a separate control device.

The use of a scrubber for controlling particulate is more practical for a spreader-stoker boiler than for a p-c boiler because the stoker boiler produces larger particles. Also, because the mass loading from the spreader stoker is considerably less, pressure drop and liquid volumes to the scrubber are smaller. The scrubber must be designed to avoid resuspension of particulate matter as a result of the high suspended and dissolved solids in the scrubbing liquor. Also, scrubber components must be designed to withstand possible corrosion.

Electrostatic precipitators can be used on either stoker or p-c fired boilers. Design specifications for the two types will differ considerably, however. Stoker boilers generally produce an ash that is composed of carbon and other hydrocarbons, of which 30 to 50 percent is combustible material. This can produce a low-resistivity ash that is difficult to retain on the

collection plates. Although the actual surface area required to collect the particulate may be low (100 to 175 ft^2/1000 acfm) and the power input may be high, the ESP must be designed with low superficial velocities to minimize particle reentrainment.

The opposite situation may occur with p-c boilers equipped with ESP's. Because combustion is usually more complete in a p-c boiler, the other constituents in the coal play a major role in determining ash characteristics. High resistivity can be of major concern, particularly when low-sulfur/low-sodium coals are burned. If high resistivities are encountered, the ash tends to be very tenacious when collected in the ESP. This makes the ash difficult to remove from the plates. High-resistivity ash causes a significant voltage drop across the dust layer, which can cause sparking, back-corona effects, and reduced power input to the ESP. Potential solutions are to change the coal supply; to change operating temperatures to produce better resistivity characteristics; to use such conditioning agents as ammonia, water, or SO_3; or to size the ESP to operate at low power input with adequate treatment times.

Fabric filters are often used to avoid the problems with resistivity. This control technique is suitable for both stoker and p-c fired boilers. Particular attention, however, must be paid to coal quality and firing practices of stoker-fired boilers to avoid bag blinding problems due to unburned particles of carbon and sticky hydrocarbons. The fabric filter is usually designed for high-temperature operation, and either fiberglass or Teflon® bags are used for particulate collection. The two types of bag cleaning mechanisms are reverse-air and pulse-jet. The reverse air mechanism is generally limited to an air-to-cloth ratio (A/C) of 2.5 acfm/ft^2 of cloth area. The pulse-jet mechanism can operate in a somewhat higher range (A/C ratio of 4.0 to 4.5) because of its higher available cleaning energy. A precleaner such as a multicyclone or a simple impaction baffle plate is usually employed to remove the larger, more-abrasive particulate. The normal operating pressure drop range for fabric filter is 3 to 6 in. of H_2O.

The use of a mechanical collector or multicyclone as the sole control device is generally limited to stoker fired boilers. The larger particulate and the lower uncontrolled emission rates make this a suitable control option for some sources. These devices, however, operate most effectively at or near the design gas volume. Thus, care must be taken not to exceed the gas volume.

3.5.3.4 Bark Boilers--

Particulate emissions from bark boilers have been controlled by either mechanical collectors or scrubbers, and sometimes both. More recently some bark boilers have been equipped with ESP's to control emissions, but operating experience is relatively limited. Although bark boilers behave much as coal-fired stoker boilers do, a major concern is the generation of fine particulate as a result of unburned hydrocarbons leaving the furnace. These particles are difficult to control when a scrubber or multicyclone is used. Therefore, combustion control is generally more effective. These particles are less difficult to collect in a properly sized ESP, although they are potentially sticky. This potential stickiness almost precludes the use of fabric filters.

Variable-throat scrubbers are generally used to maintain a preset pressure drop over a variety of gas flow rates. Multicyclones are less tolerant to flow rate changes and perform better with a stable flow near design gas volume conditions. Pressure drop requirements for a scrubber may be high (15 to 25 in. H_2O), whereas 3 to 4 in. H_2O pressure drop is typical for the multicyclone. The two major disadvantages of scrubbers are the space requirements and the disposal of the scrubbing liquor containing the collected ash.

3.5.4 Malfunctions

Numerous malfunctions can occur in power boilers, but the two most common operational problems are fuel quality and establishment of proper excess air levels. Often the excess air level is much higher than needed for complete combustion. This situation can decrease boiler efficiency, increase the amount of fuel fired to develop a given quantity of steam, and increase emissions.

The presence of the extra nitrogen and oxygen in the excess combustion air in combination with the combustion gases generally produces a dilution effect. Although the peak flame temperature may increase, the average flame temperature decreases because an extra quantity of gas must be heated. This decrease in average temperature decreases the radiant heat transfer to the furnace walls. In extreme cases, the extra gas volume will cause incomplete combustion because of the average decrease in temperature and increase in the vertical velocity out of the boiler, which causes unburned fuel to be carried out of the furnace zone. This is contrary to combustion principles, which

indicate that a decrease in temperature requires an increase in reaction time. As the flue gas leaves the flame zone, it begins to lose heat and starts to cool.

Increased gas volume resulting from increased excess air means that the velocity of the flue gas through the convective tube passes in the boiler must increase because the available volume between the tubes is fixed. An increase in velocity of the flue gas over the tubes will increase the convective heat transfer rate. Unfortunately, the tube area is fixed, and the flue gas passes through the convective heat transfer zone faster than normal, and the increased heat transfer rate in the convective section of the boiler never quite offsets the decrease in heat transfer in the radiant zone. Thus, more heat is lost from the boiler during high excess air conditions than during normal low excess air firing. The usual indicator of heat loss is an increase in stack temperature and oxygen levels. It should be noted that controlling the excess air is one way that boiler operators can use to control heat transfer rates in various portions of the boiler. Improper adjustment or failure to calibrate the controls periodically can reduce boiler efficiency and make steam adjustments difficult.

Minimum excess air levels differ for the various fuels, ranging from 10 to 15 percent for natural gas, 10 to 25 percent for oil, 20 to 30 percent for p-c boilers, 30 to 50 percent for spreader-stoker boilers, and 75 to 100 percent for bark boilers. The minimum excess air levels for highest boiler efficiency are generally those at which small levels of carbon monoxide begin to appear. Boiler excess air is controlled by the use of CO_2 or O_2 monitors at the outlet of the radiant heat zone. Typically, CO levels are maintained at approximately 100 ppm. Maximum levels of 400 ppm are usually established to prevent explosions of CO pockets within the boiler due to incomplete combustion of the fuel.

Another boiler problem that shows similar symptoms to high excess air levels is the failure of sootblowers. Sootblowers may use steam or compressed air to clean deposits of the boiler tubes. The loading and characteristics of the ash dictate sootblowing requirements. Continuous sootblowing may be required on a p-c boiler, whereas a cycle of once per shift may be sufficient for oil-fired boilers. Failure to blow the soot from the boiler tubes allows deposits to form, which reduces the heat transfer rate through the tubes.

The resulting decrease in efficiency is characterized by an increase in stack temperature with the O_2 or CO_2 levels remaining the same.

The mixing of natural gas and combustion air entails relatively few problems. With the firing of oil or solid fuel, however, provisions must be made for effective mixing of combustion air and fuel without excessive turbulence or excessive quantities of excess air. In oil firing it is necessary to atomize the fuel in the burner. This is usually accomplished by using steam or air at a pressure of at least 30 psig. The finer the atomization, the better the combustion, because there is more droplet surface area on which the combustion processes can take place. Failure to check routinely for proper atomizing can result in poor combustion and excessive carbon carryover.

In coal-fired boilers, coal quality can be a serious problem. Problems vary according to the firing method, but the effect of coal quality is equally great on emissions and combustion efficiency. Because of their fundamental differences, stoker and p-c firing are discussed separately.

Spreader-stoker boilers are very sensitive to coal characteristics. For example, for proper combustion, the size of the coal must be within the range of 1-1/4 inches to fines. (See Figure 3-91.) These size distributions represent coal delivered to the boiler, not that received from the suppliers. The spreader-stoker must have some fine coal because 30 to 50 percent of the coal is burned in suspension and the larger coal falls to the grate to form a fuel bed. The mid-sized to larger coal lumps are necessary to form a fuel bed of the proper porosity for good combustion. If excessive fines are present in the coal, too much coal is burned in suspension and carried out of the boiler, which causes poor combustion (high carbon loss) and excessive particulate carryover. Too much handling of the coal can create high levels of fines. On the other hand, the lack of fines can have an adverse effect on combustion because of excessive burning on the grate, unstable flame conditions, and high carbon loss. The coal must also be evenly distributed over the grates from side to side and front to rear.

Coal sizing is not a big problem in p-c firing except for the maximum size. The maximum top size for most pulverizers is about 2 inches. Very high quantities of fines may cause some problems with some pulverizers, but most are easily capable of producing the required fineness (70 to 75

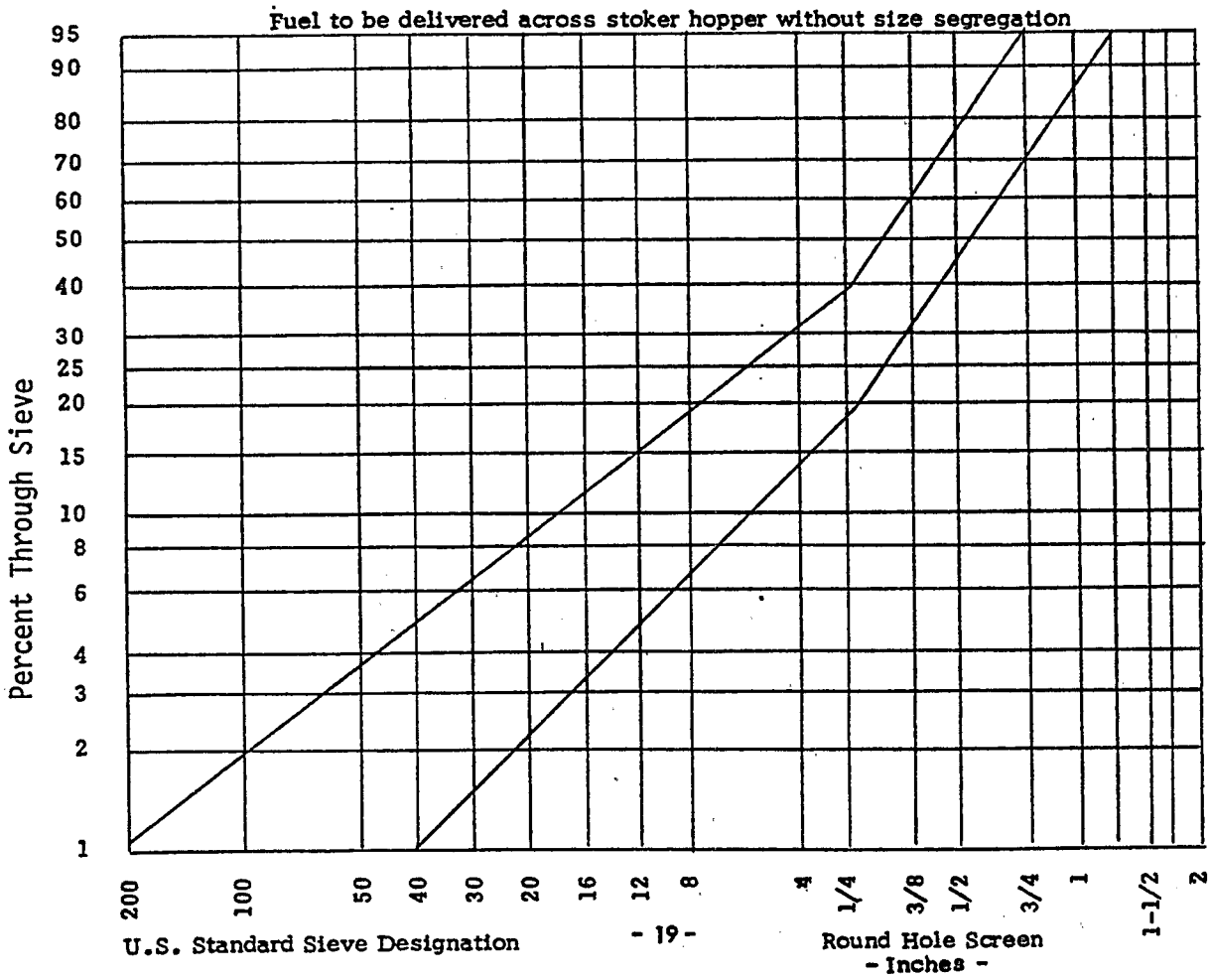

Figure 3-91. Coal size distribution for firing in a spreader stoker.

percent through a 200-mesh screen). The fundamental difference between the p-c boiler and the stoker is that in p-c firing the coal is dried, crushed, and burned in suspension, whereas in stoker firing it is fired as is. Significant changes in coal characteristics, however, can cause problems.

Most p-c fired boilers installations have at least one extra pulverizer to allow routine maintenance to be performed without reducing the boiler load. Selecting the number of pulverizers to handle the desired load is based on the heat content and grindability of the coal because these characteristics define the quantity of coal that must be ground per hour, minute, day, etc., and the rate at which the coal can be ground to the desired fineness. They also define the minimum pulverizer capability required and the necessary redundancy for maintenance. Because pulverizers are expensive, excess capacity is held to a minimum. If the grindability of the coal decreases (more difficult to grind) or the heat content of the coal decreases significantly, or both, the existing pulverizer capability may not be sufficient to provide the necessary fuel input to maintain steam rate. This is often indicated by pulverizers operating at full capacity and the boiler still being unable to reach full load.

Changes in ash content and other characteristics of the coal can significantly affect boiler operation. Increased ash content may increase the sootblowing requirement and where sootblowing capabilities are marginal, it can increase boiler stack losses due to inefficient heat transfer. A more serious problem is an increase in slagging potential of the ash. This may entail derating of the boiler to lower heat release rates to prevent slagging and increasing the sootblowing requirements. Boiler operating conditions may become difficult to control because of a sticky ash coating that reduces heat transfer efficiency. These sticky ashes can be very difficult to remove, and they can cause damage to the boiler tubes due to localized hot spots. These problems may be the result of changes in a coal seam or the supplying coal mine. Coal blending can sometimes lead to similar problems because the euectic ash formed by the blended coal may have an ash fusion temperature lower than either coal on its own.

Improvement in coal quality also can lead to operating problems in the p-c boiler. If the boiler was designed for a slagging coal and a nonslagging coal is burned, the furnace walls will be too clean for the design conditions.

A higher heat release rate can be tolerated under these conditions, but too much radiant heat is usually adsorbed, which makes it difficult for the superheater to obtain the high superheated steam temperatures. Turning off or reducing sootblowing helps alleviate this problem.

Fineness of the coal from the pulverizers should be checked weekly. Failure to feed a fine coal to the burners may cause incomplete combustion of coal, which allows unburned, raw coal to pass out of the boilers to the control equipment and represents inefficient boiler operation. Excessively fine coal may result in excessive pulverizing energy being expended and the possible taxing of the pulverizer capacity at full load conditions. When the coal is Eastern bituminous, the test should show that 70 to 75 percent of the pulverized coal would pass through a 200-mesh screen. When the coal is Western sub-bituminous, somewhat less fineness (60 to 65 percent) is needed because of the "noncaking" properties of these coals.

A tube leak will cause boiler shutdown, and it can affect the control equipment operations. Tube leaks that are most serious from the standpoint of affecting control equipment operation are waterwall, boiler tube, and economizer tube leaks. Significant quantities of water can escape into the flue gas and cause possible pluggage of multicyclones and fabric filters and make ash removal from ESP plates difficult. Superheater tube leaks are not as serious in terms of their effect on control equipment because the steam is superheated rather than saturated.

In cold weather conditions, freezing of the fuel, particularly coal and wood bark, can prohibit proper flow of fuel to the boilers. The fuel can hang up in chutes, hoppers, or feeders, and in the case of coal shipped by rail, can freeze up in the coal railcars. On stoker boilers, hang ups in the fuel feed system can cause improper distribution of fuel on the grates. When this occurs, underfire air can channel to these uncovered portions of the grates because there is less resistance to air flow. This reduces the underfire air to other portions of the grate. This reduction may cause distortion of the grates because both the ash layer and the underfire air help protect the grates, the former by providing an insulating layer on the grate surface and the latter by providing grate cooling. In addition, the channeling of the air destroys the air/fuel ratio and increases emissions. Residual oil tanks and fuel lines are generally heated

to maintain the proper oil viscosity. Failure of these heating systems results in the inability to pump the oil.

Each control equipment category has a characteristic group of malfunctions related to the type of process being controlled and to the design characteristics of the equipment itself. The malfunction mechanisms that have been outlined in previous sections are discussed only briefly. Malfunctions in control equipment not used elsewhere in the mill are discussed in more detail.

3.5.4.1 Mechanical Collectors--

Mechanical collectors, specifically multicyclones do not have many applications in the paper mill. They are generally used to control emissions from stoker-fired coal, wood, and combination coal/bark-fired boilers. In a few cases they are used to control emissions from oil-fired boilers. They also can be used as precleaning devices for other control equipment, such as fabric filters and ESP's. Because mechanical collectors are relatively simple to operate, they do not have many failure mechanisms. Nevertheless, they require periodic checks and maintenance. There are several methods in which multicyclones fail to give the desired performance; some relate to boiler operation and others are caused by mechanical failure of components.

Multicyclones are designed to operate in a narrow range around one design gas volume and uniform particulate density. When excess air levels are significantly higher than design, however, the flue gas temperature and the firing rate are increased to compensate for decreased efficiency. As a result, the flue gas volumetric flow rate through the multicyclone can be substantially higher than design. This will lead to an increased pressure drop through the tubes and the application of increased inertial separation forces to the particles. Unfortunately, there is a practical limit to the amount of pressure drop and inertial forces that can be applied. At high gas volumes, fan capacity may be taxed and the increased pressure drop across the multicyclone may limit the quantity of gas that may be moved. When this "fan-limited" condition exists, the boiler produces more flue gas than the fan can handle, and the boiler operates under positive static pressure. Most boilers are designed to operate under slight negative pressure (between 0.1 and 0.15 inches H_2O). In addition, the inertial forces applied to the particulate may be wasted because of a particle "bounce" phenomenon that occurs at

very high tube velocities. Operation at the low end of the gas volumes results in low inertial forces.

Another problem lies in expecting the multicyclone to collect very fine particulate. This equipment is not very efficient at collecting particles below 10 μm in size, which is one reason why collection of particulate from p-c boilers by multicyclones alone is generally not acceptable. Because stoker-fired boilers usually produce large particles, multicyclones are very effective in their control. If combustion problems cause significant quantities of unburned carbon or hydrocarbons to be produced (as a result of fuel quality or air distribution problems), however, these particles are likely to pass through the mechanical collector rather than being collected.

Fly ash reinjection is not a satisfactory approach either. If reinjection is used, the larger particles (char) with higher carbon contents should be screened and reinjected into the boiler, and the fine particulate should be disposed of. Reinjection of all of the multicyclone ash means the ash must either leave as boiler ash or be reduced down in size until it is capable of passing through the collector. Little operating efficiency can be gained by using this method.

The material captured by the mechanical collector should not be stored in the hopper. Ideally, the ash will be removed by continuous discharge, which minimizes the possibility of hopper pluggage. Hopper pluggage can cause buckling of the hopper or softening of the tubes due to annealing with hot ash around the tubes. Hammering on hoppers until they become deformed does not help future performance and can actually cause future hopper bridging problems by establishing a "shelf" in a previously smooth hopper wall.

If the collector is located on the inlet side of the fan and is under negative static pressure, the hopper should be sealed by a rotary airlock, double-gate flapper valves, or some other isolation valve to prevent air inleakage through the hopper discharge. Inleakage through the discharge can cool the ash so that it does not flow as easily. Inleakage can also resuspend the captured ash into the gas stream and destroy or disturb the separation vortex established in each tube.

The multicyclone tubes are also capable of plugging. The tubes can become plugged in the outlet tube, which will cause the gas entering the tube to flow out through adjacent tubes and disturb their vortex (Figure 3-92).

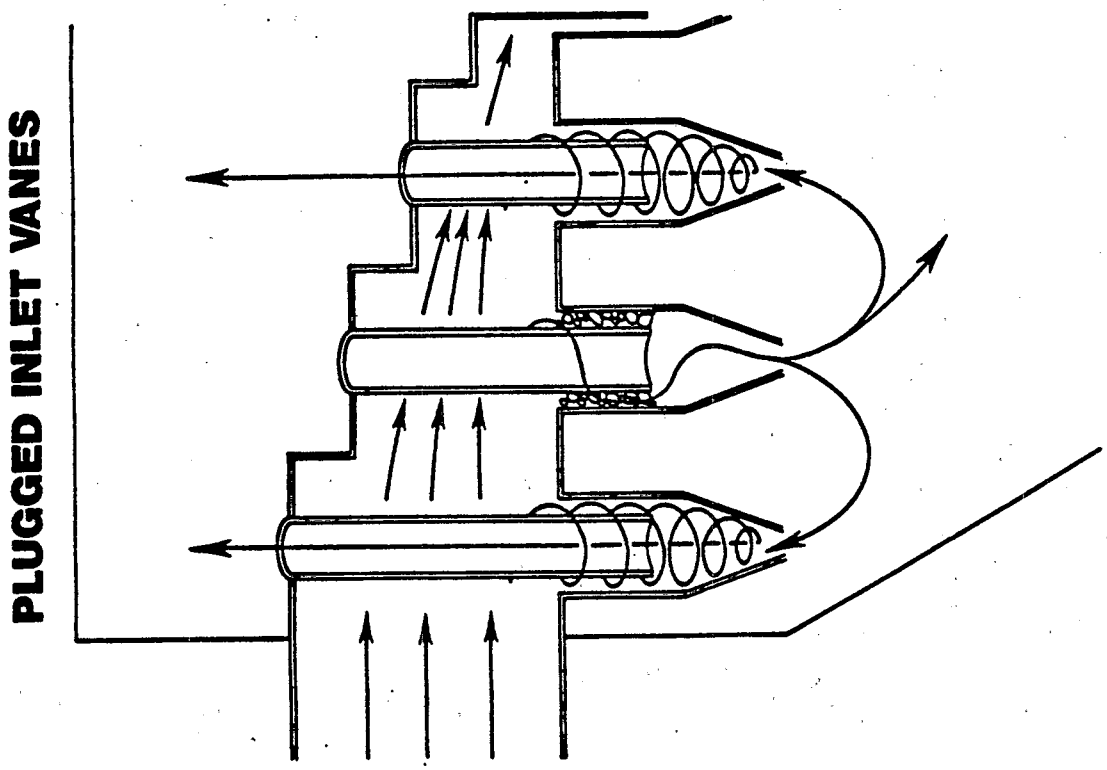

Figure 3-92. Plugged inlet vane.

The inlet vanes of the multicyclone can also become plugged and disrupt the vortex pattern (Figure 3-93). And finally, the discharge of a tube can become plugged and allow material to enter the tube and the particulate to be resuspended (Figure 3-94). Because approximately 90 percent of the pressure drop is established across the inlet vanes, a number of tubes could plug without any significant change in the collector pressure drop.

Another malfunction mechanism commonly observed in mechanical collectors is lack of routine inspection and failure to replace vanes and tubes within the collector. A maximum period between tube checks should be one year. These components are subjected to high abrasion forces and cannot perform their tasks as effectively when they are worn.

The last malfunction, one that has been encountered occasionally, is improper sealing between the inlet and outlet of the mechanical collector at the tube sheet. Specifically, gasket material used to seal the tubesheet and tubes must be selected to withstand the normal peak operating temperatures expected. Improper selection or installation of the gaskets will result in the bypass of particulate around the tubes.

3.5.4.2 Scrubbers--

The use of a scrubber is generally limited to stoker-fired bark and/or coal boilers, although it can be extended to p-c boilers and oil-fired boilers. The operating problems and characteristics are generally similar to those found on venturi scrubbers applied to lime kilns. It is suggested that the section on malfunctions (Section 3.3) be reviewed for a discussion of scrubber malfunctions.

Scrubber performance is affected by poor pressure drop maintenance, improper water flow rates, high suspended and dissolved solids, pluggage and erosion of pipes and nozzles, pump wear, and to the inability to capture fine condensable particulate. These problems, particularly with bark boilers, are related to incomplete combustion of carbon and hydrocarbons produced in the fuel bed and are analogous to the evolution of alkali materials from the kiln. Unfortunately, these hydrocarbons may not exist as a particulate until they enter the scrubber throat and are cooled by the contact with the scrubbing liquid (evaporative cooling). In addition, the use of a presaturator to cool the gas stream and allow particulate growth may enhance particulate collection, but the hydrocarbons may still remain in the very fine particle range

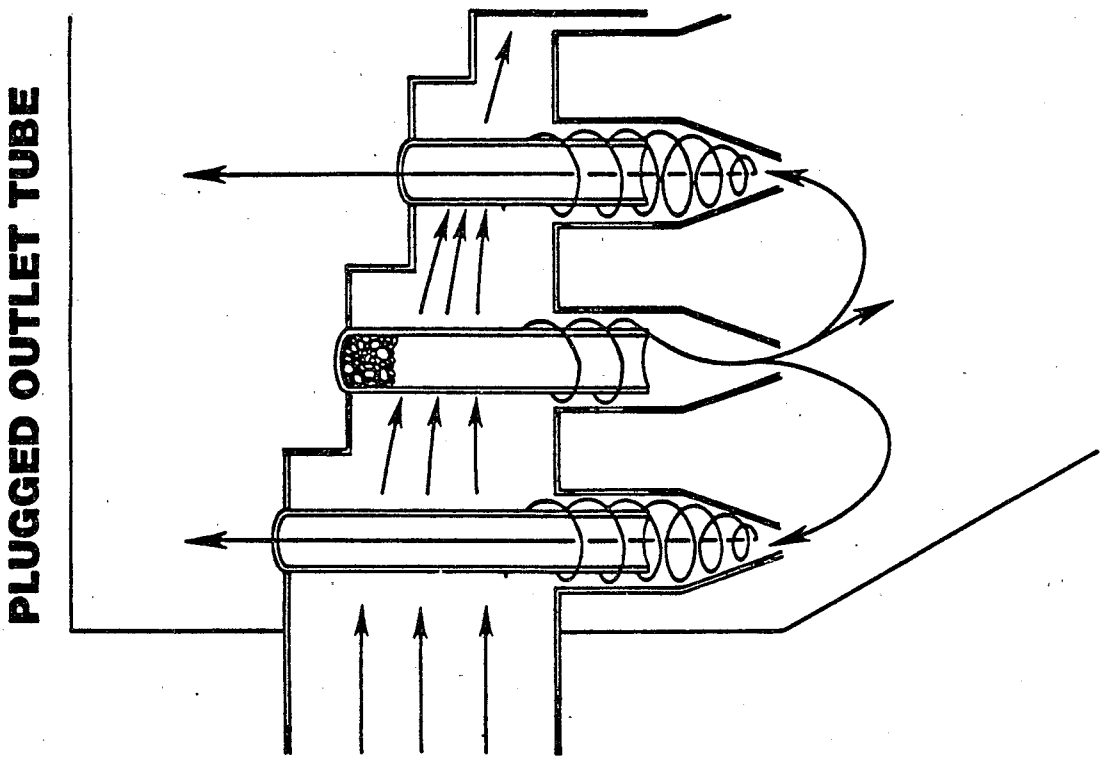

Figure 3-93. Plugged outlet tube.

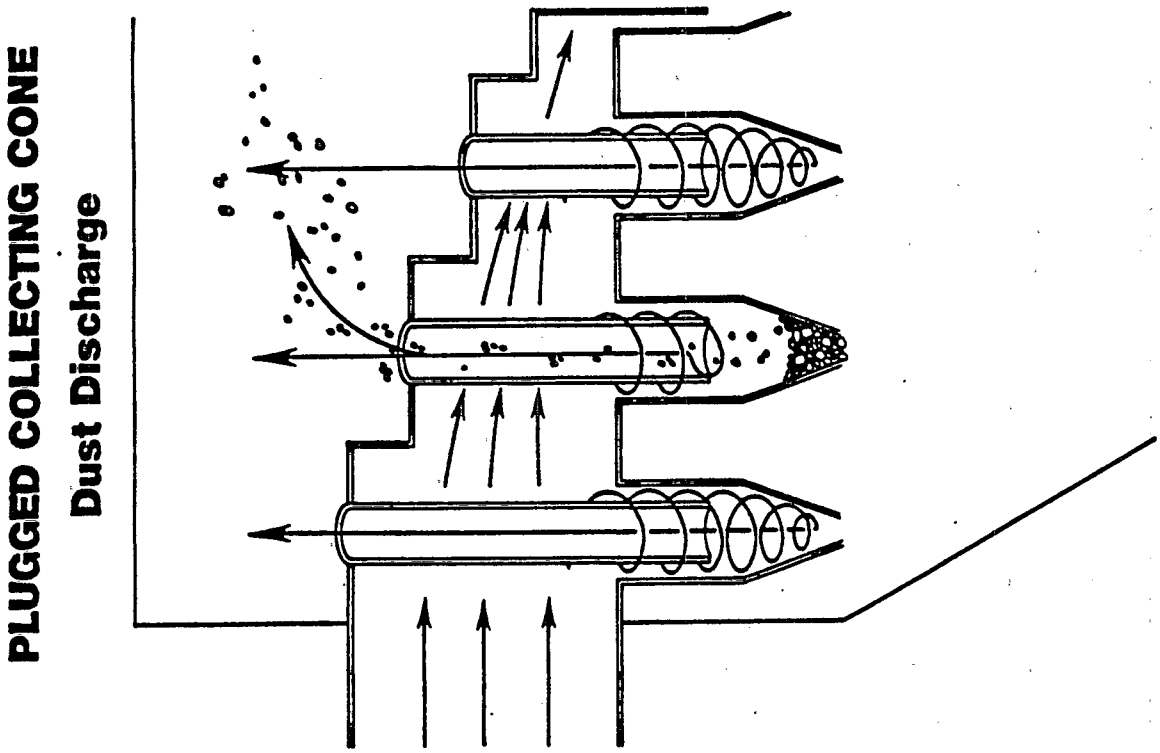

Figure 3-94. Plugged collecting tube.

A fabric filter may be successfully applied to a spreader-stoker boiler if combustion air and coal quality are carefully monitored. Although these parameters are not problems on p-c fired boilers, similar problems may occur if the air balance is upset in one of the burners. The major concern with these boilers is the temperature of the flue gas.

As in other control equipment, dust discharged into the hoppers should not be stored for any period of time. A continuous dust discharge from the hoppers is the best approach. If allowed to build up in the hopper, the dust can close off the cleaning contribution of a module and increase the A/C ratio, pressure drop, and abrasion of the other bags. Also, hopper outlets should be sealed against air inleakage to prevent resuspension of the particulate into the gas stream or excessive cooling of the fabric filter.

Proper installation of the bags is very important to the overall performance of a fabric filter. Bags should be the proper material, weight, and size. If bags do not meet the basic specifications, they will not survive in the environment to which they are subjected. Bag tension and handling of the bags also affect the bag life. Improperly tensioned bags or bags that are mishandled will wear out and develop leaks.

Some provision should be made for abrasion resistance in the fabric filter. The use of a precleaning device to remove the largest, most abrasive particulate will generally improve bag life. The larger particulate is generally unable to follow the gas flow and will follow a course that causes it to impact with the bottom of the bags opposite the inlet. It is usually the bottom 18 inches of the bag that has the worst abrasion damage. Fabric filters that have reverse-air cleaning (where the filtration is from inside to outside of the bag), long thimbles, and cuffs on the bag minimize wear (Figure 3-95).

Cleaning system failures can cause significant problems. Because the cleaning mechanism governs the maximum A/C ratio it also controls the cleaning frequency to some extent. In general, the higher the A/C ratio, the more frequent and more energetic the cleaning energy requirements. Failure to clean the fabric means an increase in the thickness of the dust layer (which does most of the filtering) and an increase in pressure drop. If prolonged, this situation can lead to serious long-term consequences. The response of the control systems on the boiler would be to maintain gas flow rate by opening

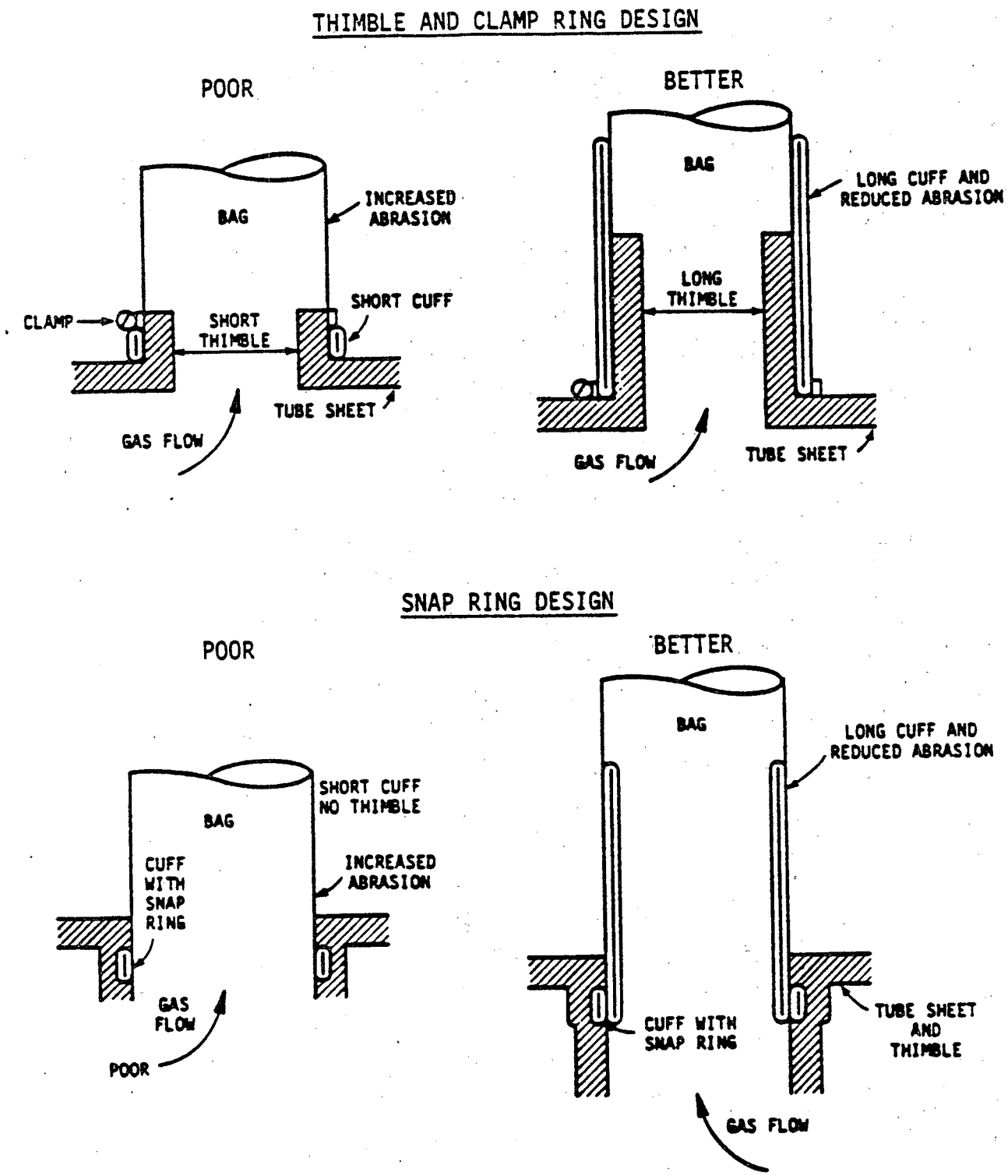

Figure 3-95. Fabric filter bag attachment methods.

a damper. Thus, gas flow would likely be the same (for awhile) at a higher pressure drop across the fabric. Unfortunately, this pressure drop can mean that fine particulate can be drawn further into the fabric weave (because of the higher available energy drop) and cause the particulate to remain even after the cleaning system is repaired. This partial blinding of the bag can cause a permanent increase in pressure drop until the bags are replaced. This can happen on both reverse-air and pulse-jet cleaning systems, although it is usually more serious on pulse-jets. This problem is usually detected by a slight increase in pressure drop if one module or row is involved and the cleaning system fails to activate. The use of individual manometers or magnehelic gauges on individual compartments of multicompartmented baghouses will not detect this problem because static pressures and flow will balance out as the air will follow the line of least resistance through the baghouse.

Another problem (limited mostly to pulse-jet fabric filters) is the presence of moisture and oil in the compressed air supply. Air-line dryers and oil traps should be provided to avoid blowing moisture and oil into the bags at 90 to 120 psig. The moisture and oil will combine with the particulate to blind the bags and cause a high pressure drop. Provisions for blowdown and other design changes will help minimize the problem, but periodic checks of compressor rings and seals in combination with the dryer will virtually eliminate the problem.

3.5.4.4 Electrostatic Precipitators--

The malfunctions of an ESP applied to a power boiler are generally the same as those on ESP's applied to the recovery boiler, with two notable exceptions: 1) fly ash resistivity must be considered in this application, and 2) ash discharge designs for fly ash are different than for salt cake, although problems caused by the failure of the discharge system are nearly identical.

As discussed in other sections of this guide, an ESP charges particles through a corona discharge process, and under the force of an electric field, moves the particles to the collection plate. At the collection plate, the particulate must leak some of its charge to the plate to complete the electrical circuit in the ESP. The resistivity of the particulate (measured in ohm-cm) governs how easily the charge is transferred through the dust layer to the plate. The particulate must be capable of retaining some charge so that it will remain on the plate until it is rapped off.

The optimum range of particle resistivity in an ESP is 1×10^8 to 1×10^{10} ohm-cm. This range allows for good collection of particulate under a strong electric field and results in high particle migration rates. The particles retain enough charge in this resistivity range to remain on the plates under the force of the electric field and to allow electrons to pass relatively easily to the plates. It is when the resistivity begins to go outside this range that operational problems begin.

Resistivity of particulate is not a constant value; it depends on several factors, including the chemical composition of the dust, the presence of moisture and other gases, and the temperature of the gas. As Figure 3-96 shows, resistivity varies over a wide range of temperatures, and the peak value for fly ash resistivity occurs in the 300-350°F range. Unfortunately, this happens to be the range in which most boilers are operated. If the resistivity falls outside the optimum range, serious problems may develop. At low temperatures, electrons tend to be conducted over the surface of the particle because of the condensation of the conducting species on the particulate. At high temperatures, the thermal activity of the electrons within the particulate allow the electrons to pass through the particulate in a mechanism called bulk conductivity. At intermediate temperatures, neither mechanism is very effective and the composite effect is an increased resistivity.

Low resistivity can usually be associated with high levels of carbon in the particulate. The particles are charged in the interelectrode space between the discharge electrode and plates, as usual. During migration to the plate, however, the particles leak too much charge to the plate and the electric field strength in the dust layer is low. In the absence of a strong charge, the particle is free to become resuspended in the gas stream (reentrainment) and to be recollected. The general approach to low resistivity is to design for low superficial velocities and to minimize rapping and perhaps ammonia conditioning to reduce reentrainment potential. The electric power input to the ESP is usually high, but without the proper resistivity, performance can be poor. If low resistivity is caused by poor combustion, combustion problems should be solved.

The other extreme, high resistivity, is of much more concern in p-c fired boilers, where combustion is usually complete. Fly ash constituents, coal sulfur content, and temperature play a major role in governing the ash

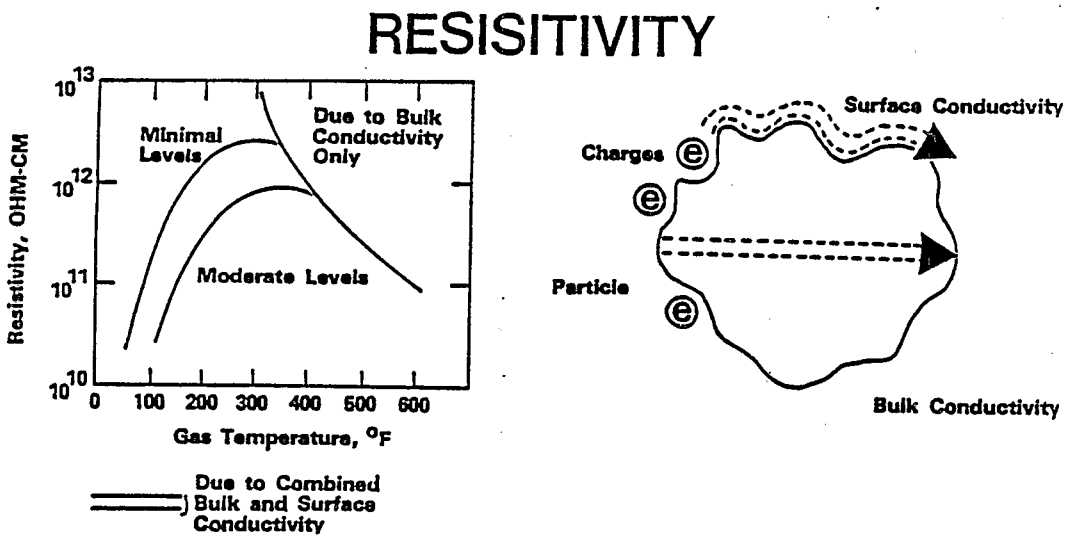

Figure 3-96. Fly ash resistivity curve.

resistivity. In general, low-sulfur coals have high potential to cause operatin problems with high resistivity.

The high-resistivity condition does not affect the ability of the particle to accept a charge. The problems begin when that particle reaches the dust layer at the plate. The particles cannot release and transfer the charge easily, and the charge that is transferred requires considerable energy. At the high voltage drops across a relatively thin dust layer, the gas between the particles begins to break down much like the corona discharge occurring at the discharge electrode. Because very high voltage drops are present across both the dust layer and the interelectrode space, the localized breakdown causes a spark to occur. Many of the breakdowns occur through the dust layer, and high resistivity is characterized by high sparking rates throughout the ESP. The critical resistivity is generally around 2×10^{11} ohm-cm, where these localized breakdowns occur, and performance continues to deteriorate as resistivity increases. During normal operation, random sparking generally does not cause problems, even though the voltage field collapses during the sparks and all the power in that field is channelled to the spark. If sparking is serious, the T-R controls limit sparking by limiting the strength of the voltage field and current flow. This reduces the particle charging rate and the migration rate in the ESP's. The voltage and current in the ESP will continue to drop as the resistivity climbs into the 1×10^{13} ohm-cm range.

The sparking, which is a symptom of a phenomenon known as back corona, finally can no longer take place because operating voltages are too low to propagate a spark across the interelectrode space. The voltage drop across the dust layer, however, is still high enough to cause a breakdown in the dust layer, and the dust layer produces significant positive particles that tend to cancel the charging process and effectively reduce the ESP to the performance of a settling chamber. Back-corona is usually characterized by low voltages and high currents, as well as a particular V-I curve relationship. If the ESP is to operate with any efficiency, it must operate at the very low levels, below back-corona onset.

The absence of electrically conducting species such as sodium and sulfur oxides in the form of sulfuric acid help enhance the resistivity of the fly ash. The absence of these species increases the potential for problems with high

resistivity, particularly when the ash contains high levels of calcium. If coal supplies vary significantly, resistivity problems may appear periodically.

The most obvious of several potential solutions is to change the coal supply. Other possible solutions include 1) designing the ESP sufficiently large to handle the high-resistivity conditions, 2) adding conditioning agents such as water or SO_3 to the gas stream to enhance the surface conductivity characteristics, 3) adding sodium compounds such as sodium carbonate to the coal, 4) adjusting the operating temperature to avoid the resistivity problems or moving the ESP to a different location (e.g., before the air preheater) where temperatures make resistivity more acceptable, or 5) adjusting and modifying T-R sets to take advantage of the new pulse-energization technology. Each solution must be examined in terms of the site-specific application.

Bark boiler ash apparently creates no resistivity problems in an ESP. Neither does oil-fired boiler ash because there is sufficient residual carbon in the ash to keep resistivity to acceptable levels. In the case of oil-fired boilers, however, there can be a problem with excessive levels of carbon in an ESP. High temperature, sufficient oxygen, and sparking can lead to ESP fires, which can cause catastrophic failure of the ESP because burning temperatures are hot enough to warp the plates and frame guides. The fires can occur in hoppers, on the plates, or both. This is one reason why ESP's, like fabric filters, are usually bypassed or deenergized on startup.

3.5.5 Inspection of Power Boilers

This section summarizes the activities associated with power boilers and the associated control equipment. It also identifies the data that should be collected during a Level III inspection and the procedures that should be used to evaluate these data.

The approach taken during the inspection is to identify those operating parameters or variables that indicate operation outside the norm for a particular boiler/control equipment combination. Normal values or conditions are established during the initial performance test or are based on the accepted state-of-the-art. This approach to source evaluation may be used to determine if a more detailed evaluation or performance stack test is required to verify compliance with emission standards.

The following subsections summarize specific areas that should be checked during the inspection.

3.5.5.1 Opacity--

The inspector should observe opacity according to EPA Reference Method 9. The observation should be made for at least 30 minutes to determine if any cyclic patterns are present. If further evaluation is warranted, the plume should be observed over a continuous period to identify any "puffing" problems when ESP's or fabric filters are used. The latter is a separate activity that is conducted after the Method 9 observation. It should be noted that opacity observations of boilers firing only natural gas should not be necessary, although a smoking natural gas boiler indicates combustion problems.

3.5.5.2 Transmissometer Data--

If units are equipped with opacity monitors (transmissometers), the inspector should record the current 6-minute average opacity and review the previous 4 hours of monitor output to determine if a cyclic pattern is occurring. To ensure that the output values are accurate, the inspector should request the plant to place the monitor in the calibration mode with respect to zero and span. As part of the initial monitor certification, the inspector should have data available on the recorder scale factors and effective stack diameter. Average opacity readings from the Method 9 observation should be compared with average transmissometer readings for identical periods. A major deviation between the values may indicate possible monitor error. It should be noted that the manual and instrument methods are not equivalent. In sources that have real-time monitor output, instantaneous opacity spikes will generally be included in the 6-minute average. Therefore, the 6-minute averages obtained from the monitor will generally be higher than those obtained by the manual method because the duration of the spikes are too short to be observed by the inspector. For ESP's with transmissometers, the inspector should note the frequency and magnitude of rapper spikes and visually determine if an inlet-to-outlet field rapper pattern is occurring. If separate monitors are installed in each duct, the inspector should evaluate the opacity and rapper reentrainment pattern in each chamber. The opacity should be compared with a typical baseline value for the boiler during known emission periods (i.e., performance tests). The opacity data should be used to evaluate ESP conditions.

Serious deviations in opacity between chambers can indicate gas flow maldistribution, an increase in penetration through one chamber as a result of rapper failure, inleakage, or low power input.

For fabric filters, the inspector should note the frequency and magnitude of spikes after the cleaning cycles. These can indicate which compartment or row may have a leak because some slight rise in opacity will normally occur after cleaning. Once the dust cake has reestablished itself over the holes, the opacity should decrease.

Opacity monitors are rarely used with scrubbers because of the wet plume conditions; however, they are used occasionally following multicyclones.

3.5.5.3 Boiler Operating Conditions--

The inspector should record pertinent boiler operating data to determine boiler operating conditions during the Level III inspection. These values may be used to determine if the boiler is operating at normal production levels and to compare with the historic baseline data obtained during performance tests. Major deviations from normal values should be evaluated with respect to their effect on control equipment performance and emission levels.

Boiler operating data that should be measured during a performance test or an inspection are plant-specific. Each boiler is usually custom-designed and erected with a unique instrument and control system package. The level of instrumentation is specified by the design engineer and purchaser (plant engineering department). Based on the size of the boiler, its cost, and the experience of the purchaser, the instrument package may range from an extremely straightforward package to one that is quite complex. In general, a minimum amount of instrumentation is necessary for safe operation of the boiler, and this level of instrumentation will be present in all facilities. More complex instrument packages can include an automated computer control system, which allows the source to optimize combustion and increase the overall efficiency of the operation.

Most critical boiler parameters are recorded on continuous strip charts or circular chart recorders, and copies may be obtained after the stack test (at the end of the day) to provide the necessary documentation. Most mills require the boiler operator to record key parameters at set intervals on a log sheet or in a log book. The log sheet is typically divided into the following general measurement areas: fuels, forced air, furnace drafts, gas temperatures, feedwater, steam, and miscellaneous items (e.g., pulverizers).

Table 3-27 lists the items or conditions that must be recorded during the stack test or Level III inspection. The list is based on a typical boiler and would require adjustment for individual installations.

TABLE 3-27. POWER BOILER OPERATING PARAMETERS TO BE RECORDED DURING PERFORMANCE TESTS OR LEVEL III INSPECTIONS

Parameter	Variable	Units
Fuels	Oil flow	gal/h
	Number of guns	None
	Oil pressure	psig
	Oil temperature	^{o}F
	Natural gas rate	10^3 ft^3/h
	Coal feed	ton/h
Forced air	Primary air flow	scf/min
	Primary air pressure	in. H_2O
	Primary air temperature	^{o}F
	Secondary air flow	scf/min
	Secondary air pressure	in. H_2O
	Secondary air temperature	^{o}F
	Overfire air flow	scf/min
	Overfire air pressure	in. H_2O
	Damper setting	%
	Underfire air flow	scf/min
	Underfire air pressure (each windbox)	in. H_2O
	Damper setting	%
	Total air flow	scf/min
Furnace drafts	Furnace	in. H_2O
	Boiler inlet	in. H_2O
	Boiler outlet	in. H_2O
	Economizer outlet	in. H_2O
	ID fan inlet	in. H_2O
	Control equipment inlet	in. H_2O

(continued)

TABLE 3-27 (continued)

Parameter	Variable	Units
Gas temperatures	Boiler outlet	^{o}F
	Economizer outlet	^{o}F
	Evaporator outlet	^{o}F
	ID fan outlet	^{o}F
	Control equipment inlet	^{o}F
Feedwater	Flow	(10^3 lb/h)
	Pressure	psig
	Temperature	^{o}F
Steam	Flow	(10^3 lb/h)
	Drum pressure	psig
	Superheater temperature	^{o}F
Miscellaneous	Flue gas oxygen (boiler outlet)	%
	Pulverizer motor current	amps
	Pulverizer speed	rpm
	ID fan motor current	amps
	FD fan motor current	amps

Integrator readings also should be recorded at the beginning and ending of each test run for the following parameters:

- Fuel flow (pounds or gallons)
- Steam flow (pounds)
- Steam used in soot blowing (pounds)

Based on data obtained from the log, steam tables, integrator readings, and boiler design data, the following values should be calculated:

- Average steam flow for each run
- Average fuel fired for each test run
- Heat input (10^6 Btu/h) to the boiler for each test run for each fuel fired (oil, natural gas, coal, wood)

- Average boiler output (10^6 Btu/h) for each test run
- Boiler thermal efficiency (heat output/heat input) for each test run
- Boiler excess air (percent)

3.5.5.4 Flue Gas Volume--

Since control equipment performance is affected by total gas volume, the inspector should estimate the volume based on fuel firing rates, flue gas oxygen content, and temperature. Most plants monitor flue gas oxygen at the economizer or the furnace outlet for combustion control. Measurements during the Level III should be made at the outlet of the control equipment to estimate flue gas volume (except for scrubbers). The flue gas volume can be calculated by using an F-factor method and the heat input rate to the boiler. The inspector should be equipped with a portable temperature-measuring device (e.g., a thermometer or thermocouple) and portable oxygen-measuring equipment (e.g., a Fyrite oxygen analyzer or Orsat). The contribution of multiple fuels may be determined if their percent contribution to the overall heat input rate is known and the gas volumes of each fuel can be calculated. Because all measurements and calculations are at the same condition, the volumes from combustion of each fuel may be added to determine the total gas volume. The F-factor can be calculated from the fuel analysis, but standard tables are available with values for a variety of fuels. It should be noted that oxygen measurements are made on a dry-basis and excess air corrections are based on a dry-basis.

For fuels such as coal, oil, or natural gas, the equation is as follows:

$$Q = 10^6 \text{ Btu/min} \left[F_d \frac{20.9}{20.9 - \%O_2} + (F_w - F_d) \right] \frac{(T_m + 460)}{528}$$

where

Q = gas volume in actual cubic feet per minute, acfm

F_d = dry F-factor for fuel, dscf/10^6 Btu

$\%O_2$ = percent oxygen in flue gas

F_w = wet F-factor for fuel, wscf/10^6 Btu

T_m = measured temperature of flue gas, ^oF

The heat input can be calculated if the fuel input rate and the heating value of the fuel are known. For example, for coal:

$$10^6 \text{ Btu/min} = \text{lb/min} \times 10^6 \text{ Btu/lb of coal}$$

or oil:

$$10^6 \text{ Btu/min} = \text{gal oil/min} \times 10^6 \text{ Btu/gal}$$

The factor of $(F_w - F_d)$ accounts for the extra gas volume due to moisture produced during combustion plus typical moisture in the fuel. It must be added after correction of the gas volume for excess air because the O_2 measurement is on a dry-basis.

For bark or wood firing, the equation becomes somewhat more complex because the moisture percent of these fuels is very high and the contribution of the moisture from evaporation to the flue gas is significantly higher than that produced by combustion. For wood or bark, an equation is as follows:

$$Q = 10^6 \text{ Btu/min} \left[F_d \times \frac{20.9}{20.9 - \%O_2} + (\text{Moisture Correction}) \right] \frac{(T_m + 460)}{528}$$

This equation should be used when the values have the same definitions as above and the moisture correction is

$$\text{Moisture Correction} = \frac{\text{fractional } \% \ H_2O \text{ in fuel by weight} \times 21.41}{(1 - \text{fractional } \% \ H_2O \text{ in fuel}) \times 10^6 \text{ Btu/lb of dry fuel}}$$

Data on wood and bark usually give weight percent of moisture and heating value per pound of dry fuel. The value of 21.41 is the conversion factor (minus units) to convert 1 lb of water to 1 lb of water vapor volume (i.e., 1 lb H_2O occupies 21.41 scf of volume).

For scrubbers, measurements should be made at the inlet of the scrubber and then corrected for the decrease in temperature and increase in water vapor through the adiabatic cooling of the gas stream.

When fuel measurements are not available, the boiler heat input rates may be estimated if the steam conditions, feedwater conditions, and boiler efficiency are known. Boiler efficiency can be determined from boiler efficiency

charts if temperature and excess air levels are known. The difference between heat content of the steam and the feedwater represents an approximate heat output of the boiler (these values may be determined from standard steam tables). Once heat output and boiler efficiency have been calculated, heat input to the boiler can be calculated as follows:

$$\text{Heat Input} = \frac{\text{Heat Output}}{\text{Boiler Efficiency}}$$

This value can then be used for the F-factor calculations.

3.5.5.5 Control Equipment Inspections--

ESP's--The ESP's applied to power boilers are very similar to those of recovery boilers with respect to their layout and key parameters to be calculated. A complete discussion of the data to be taken, the calculations, and the significance of these parameters were presented earlier. The major difference between ESP's on power boilers and recovery boilers is the possibility of resistivity problems on the power boilers.

Low resistivities are generally not expected except on stoker-fired boilers and boilers firing high-sulfur coal. The electrical signs of operating problems are high voltage, current, and power input levels that show the appropriate patterns from the inlet to the outlet of the ESP. If reentrainment problems are apparent, superficial velocities are normal, and applied rapping forces are normal, then a low resistivity problem may exist. Checks should be made to see if changes have occurred in temperature or fuel quality that could cause a change in resistivity.

For ESP's not designed to handle high resistivities, a change in resistivity to higher values can significantly impair performance. Higher resistivity may be caused by a change in coal sulfur content, a change in other ash constituents, or a change in the temperature. Whatever the cause, the performance usually deteriorates. As ash becomes more tenacious and difficult to remove from the plates, power levels decrease and sparking increases throughout the ESP. In severe cases, virtually no normally expected increase in power or current levels occurs from inlet to outlet. Secondary current levels may just approach 50 percent of maximum secondary current ratings on the outlet fields rather than the typical 85 to 100 percent levels. When fly ash resistivity has increased to the point where sparking no longer occurs because of a strong

back corona effect, currents will be very high at low voltages and performance will be poor. The voltage-current curve will show distinct negative slopes, indicating back-corona. This condition may be temporary, or it may persist for some time if residual ash continues to cling to the plates.

Fabric Filters--The calculations and measurements that can be made on a fabric filter are somewhat limited. Symptoms of operating and/or design problems may appear during the inspection. For safety reasons, however, an internal inspection of the fabric filter is not always possible without shutting the boiler down. Internal inspections are usually most effective for determining fabric filter problems.

The first parameter of interest is the opacity. Unless a condensable plume is present, the average opacity should be low. After each cleaning cycle, opacity will generally increase slightly as the bags are placed back in service with the dust cake removed. Some seepage occurs until the filtering action of the dust cake is restored. A significant increase in opacity could indicate a pinhole leak in a given module or a row of bags. The length of time required to restore emissions to their previous levels is an indication of the severity of the problem.

The pressure drop may give some indication of the severity of any holes in the bags. The presence of a few pinhole leaks is unlikely to affect the total pressure drop. Larger leaks, however, can lower the pressure drop, and complete failure of bags can cause the pressure drop to approach 0.5 to 1 in.

An increase in pressure drop may be the result of increased gas flow through the fabric filter or greater dust layer resistance to the gas flow. An F-factor calculation should indicate any shifts in gas flow rate through the fabric filter. If no apparent shift in gas volume has occurred, blinding of the fabric due to failure of the cleaning mechanism or some other related cause may be suspect. Increased gas volumes through the fabric filter can also lead to gradual bag blinding caused by the deeper penetration of the particulate into the fabric weave, which cleaning cannot remove. The result is usually a gradually increasing pressure drop as the bags slowly become blinded. Failure of the cleaning system or injection of moisture into the fabric filter will usually cause rapid increases in pressure drop.

If no instruments are available to determine pressure drop, static pressure taps at the inlet and outlet of the fabric filter should provide a basis for determining pressure drop. If instruments are available, they should be checked to see if they are operating properly. Inlet pressure taps tend to become plugged because of the dirty gas stream. The taps also should be checked to be certain that they are drilled through the walls; occasionally, this is forgotten during construction. Sometimes only one tap is connected. If only the inlet tap is connected, readings may appear to be in the proper range when they actually are quite erroneous.

Individual manometers or magnehelic gauges on each compartment generally will not indicate problems within a specific compartment because the pressure drop will equalize across compartments. Because the gas flow through the compartments will follow the path of least resistance, flow rates through the various compartments may be unequal, although pressure drops may be the same.

The hopper discharge should be checked for plugged or damaged hoppers. Screw conveyers, rotary airlocks, and other ash removal systems should operate continuously or at least on a frequent cycle. Pluggage of the hopper can allow the ash to build up well into the bags and cause the bags to be shut off from the gas flow. This will increase the effective A/C ratio in the fabric filter and the pressure drop.

The cleaning system should be checked for proper operation, and each compartment or bag row should be cleaned. If the time between cleaning cycles is too long, cleaning mechanism should be checked in the manual mode. Pulse-jet systems should fire with a resounding thud, with compressed air pressures of 90 to 120 psig. Reverse-air systems should isolate each compartment and the reverse-air and dwell cycles should be sequenced to allow flexing and release of the dust cake under gentle conditions (no "popping" of the bags).

A more definitive diagnosis of problems within a fabric filter requires compartment isolation and internal access to the baghouse with the appropriate safety equipment. This may be possible during scheduled outages or if good isolation and purge systems exist. Typical key points in an internal inspection include proper installation and tensioning of bags, the presence and patterns of deposits on the "clean side" of the fabric filter, location and

integrity of the baffle plate, apparent bag/hopper pluggage, moisture or oil problems blinding the bag, and evidence of high temperatures in the fabric filter.

Scrubbers--Because the venturi scrubbers applied to power boilers are nearly identical to those applied to lime kilns, the reader is referred to the section on Lime Kiln Scrubber Inspections for a discussion of items to observe or calculate. There is a difference, however, in the operating pH of these two scrubbers. Lime kiln scrubbers operate under alkaline conditions and power boilers operate under acidic conditions. As a result of the acidic conditions, the power boiler scrubber may have to be more carefully engineered to prevent corrosion problems. Other problems with condensable matter, solids buildups, and fine particle generation will be similar for a power boiler.

Multicyclones--Inspections of multicyclones are relatively limited because of restricted access to equipment and the limited number of key operating parameters to be evaluated. Other than checking pressure drop across the multicyclone, checking for proper hopper discharge, and confirming that gas flow rates are near nominal design levels, more detailed checks for proper operation require internal access to the multicyclone. This will require scheduling a visit during a boiler outage.

Multicyclone opacity levels usually provide less information about equipment performance than the opacity levels for other pieces of control equipment. The multicyclone is normally unable to collect the smaller light scattering particles and, therefore a higher level of opacity is possible than with ESP's or fabric filters. Because the multicyclone only collects the larger sized particles, little or no observable shift in opacity may be noted even though performance has decreased. As a result of a malfunction, however, the change in opacity level may indicate a change in fuel or combustion characteristics because these can affect the distribution of fine particles entering the multicyclone.

Pressure drop across the multicyclone is generally a poor indicator of performance and internal multicyclone conditions in the normal pressure drop range (i.e., 2 to 4 in. H_2O). When very low or very high pressure drops are encountered, it provides an indication that something is wrong inside the multicyclone and that maintenance is required. Small shifts in pressure drop,

(<0.5 in. H_2O) however, have little meaning in evaluating performance. Usually higher pressure drops mean improved performance, but this is dependent on the initial design parameters.

3.6 OTHER SOURCES

Several miscellaneous sources at a kraft pulp mill involve the movement of material and/or the treatment of pulp. These sources include the bleach plant and the raw material handling systems. The major emissions from the bleach plant are chlorine gas and chlorine dioxide. The chlorine and chlorine dioxide are hooded, vented, and passed through a packed bed scrubber using a caustic solution. The major malfunctions at the bleach plant involve the bed pluggage and channeling and reduction in water flow to the packed bed scrubber. Because of the toxic nature of the emissions from the bleach plant the inspection is generally limited to a review of process and control equipment specifications. A checklist to aid in inspecting the bleach plant is provided in Table 3-31 on page 296.

The major emissions from the raw material handling system are fugitive particulate. In general, the fugitive emissions are controlled by hooding and venting the emissions to a fabric filter. Most malfunctions in the raw material handling area are the result of low capture velocity or fabric filter failure. The inspections for the raw material handling area involve a Level I or Level II Inspection. A checklist to aid in inspecting the raw material handling system is provided in Table 3-32 on page 299.

3.6.1 Bleach Plant

3.6.1.1 Process Description--

Due to its nature, the brightness of kraft pulp is low. In order to use the pulp for finer quality white paper, additional lignin must be removed. The lignin may be removed through chlorination, oxidation, or reduction. Chemicals used in chlorination bleaching are chlorine gas and chlorine dioxide.

Oxidation may be accomplished by use of hypochlorites, peroxides, sodium chlorite, and peracetic acid. Reducing agents include sodium sulfide, sodium bisulfide, sodium dithionite, zinc dithionite, and borohydrides.

In the pulp mill, bleaching is accomplished in aqueous solutions under controlled conditions. The pulp is bleached and extracted in successive steps. After bleaching, the decomposed lignin is removed by alkaline washing.

The following is a discussion of the bleach processes commonly used in kraft mills.

Chlorination--Chlorination is accomplished through the use of chlorine gas or chlorine dioxide that is injected into the stock solution and allowed to react in a chlorination tower. The pH of the solution must be maintained below 2. The retention time is generally between 20 and 60 minutes at a stock concentration of 3 to 4 percent. Usage rates are of the order of 3 to 8 percent of pulp weight.[2] Extraction is accomplished by alkali washing in successive stages.

Alkali extraction--Alkali is used to remove residual bleaching agents and freed lignin. Bleach products are soluble in alkaline solutions at a pH of 10 to 11. The alkaline solution also dissolves resinous materials, pentosons, and carbohydrates. Typical chemicals used are hydroxides, sulfides of alkali metals, and calcium hydroxide.

Extraction is generally accomplished at stock concentrations of 3 to 16 percent and require 60 to 120 minutes for completion. The most common extraction chemical is sodium hydroxide. Solution strength is between 0.5 and 3.0 percent on weight of pulp (air dried unbleached tons).[2]

Hypochlorites--Hypochlorites may be used in second or third stage bleach steps after chlorination. Hypochlorite bleaches are not specific to lignin and react with the pulp cellulose. Bleaching is typically carried out at a pH of 6 to 9.5. Stock concentration ranges from 12 to 16 percent. Retention time may be 2½ hours for the first stage and 4 hours for the second stage.[2] The solution pH may be buffered by use of caustic soda, sodium carbonate, milk of lime, or lime.

Chlorine dioxide--Chlorine dioxide may not be shipped and must be generated at the mill site. It is toxic, corrossive, and explosive. Above 50°C it experiences explosive decomposition. Typical application rates are 0.3 to 1.2 percent on weight of pulp at 70°C and at a pH between 3 and 7.[2]

Peroxides--Peroxides are generally used as a final bleach step. Application rates are 0.1 to 0.25 percent on weight of pulp. Pulp concentrations are between 12 and 15 percent. Retention times may be as high as 5 hours at 80 to 85°C and at a pH of 9 to 11.5.

Figure 3-97 shows a typical three-stage bleach line used for sulfate pulp. The line consists of a chlorination tower (Cl_2), chlorination washer, caustic extraction, caustic washer, hypochlorite tower, and hypochlorite washer.[92,96]

Bleach towers are either up-flow or down-flow. The height and diameter are specified to provide the required retention time. Vacuum washers are frequently used and are generally covered to reduce chlorine lost to the work area. A vacuum washer is shown in Figure 3-98.[93,97]

Bleach stages and process are generally identified by use of a shorthand notation with a series of letters. Table 3-28 lists the most common designation for each chemical step. A slash (/) between steps indicates successive additions of the agents without washing. Agents placed in parenthesis ( ) indicate simultaneous application of agents. Table 3-29 is a list of the most common bleaching sequences used for sulfate pulps.[2]

TABLE 3-28. COMMON LETTER DESIGNATIONS USED FOR BLEACH AGENTS[2]

A	Acid treatment
C	Chlorination
D	Chlorine dioxide
E	Alkaline extraction
H	Hypochlorite
HS	Dithionite
P	Peroxide
PA	Peracetic acid
W	Water soak
( )	Simultaneous addition
/	Successive addition without washing

TABLE 3-29. BLEACHING SEQUENCES FOR SULFATE PULP

*CED
*CEDED
*CEHH
*CEHD
CEDD
C/HEDD
*CEH
*CEHEH
CC/HEHH
C(EH)HEH
CEHHP
CC/HPH
CH(EH)D
CEH(EP)H
*CEHDP
CEHDED
*CEHDP
*CEHEDP
CC/HEHEH
CEHEHH
CEHEHD
CEHHDED
CC/HED/H
CEHCHDED
*HCEH
*CHEH
*CHED

*Bleaching sequences for hardwood sulfate pulp.

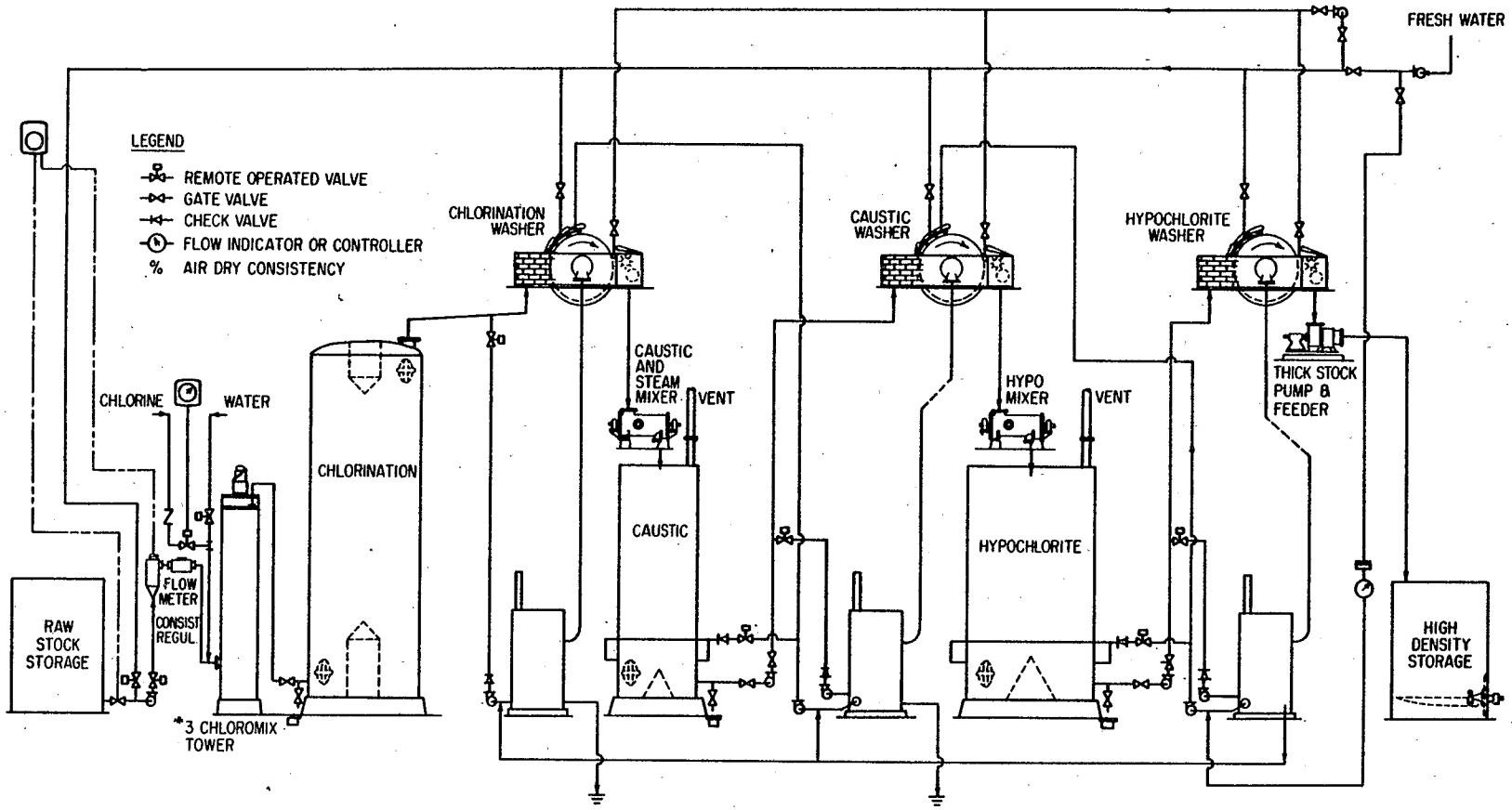

Figure 3-97. Flow diagram of a three-stage bleach plant: CEH.[92]

Source: Reproduced with permission of Joint Textbook Committee of the Paper Industry.

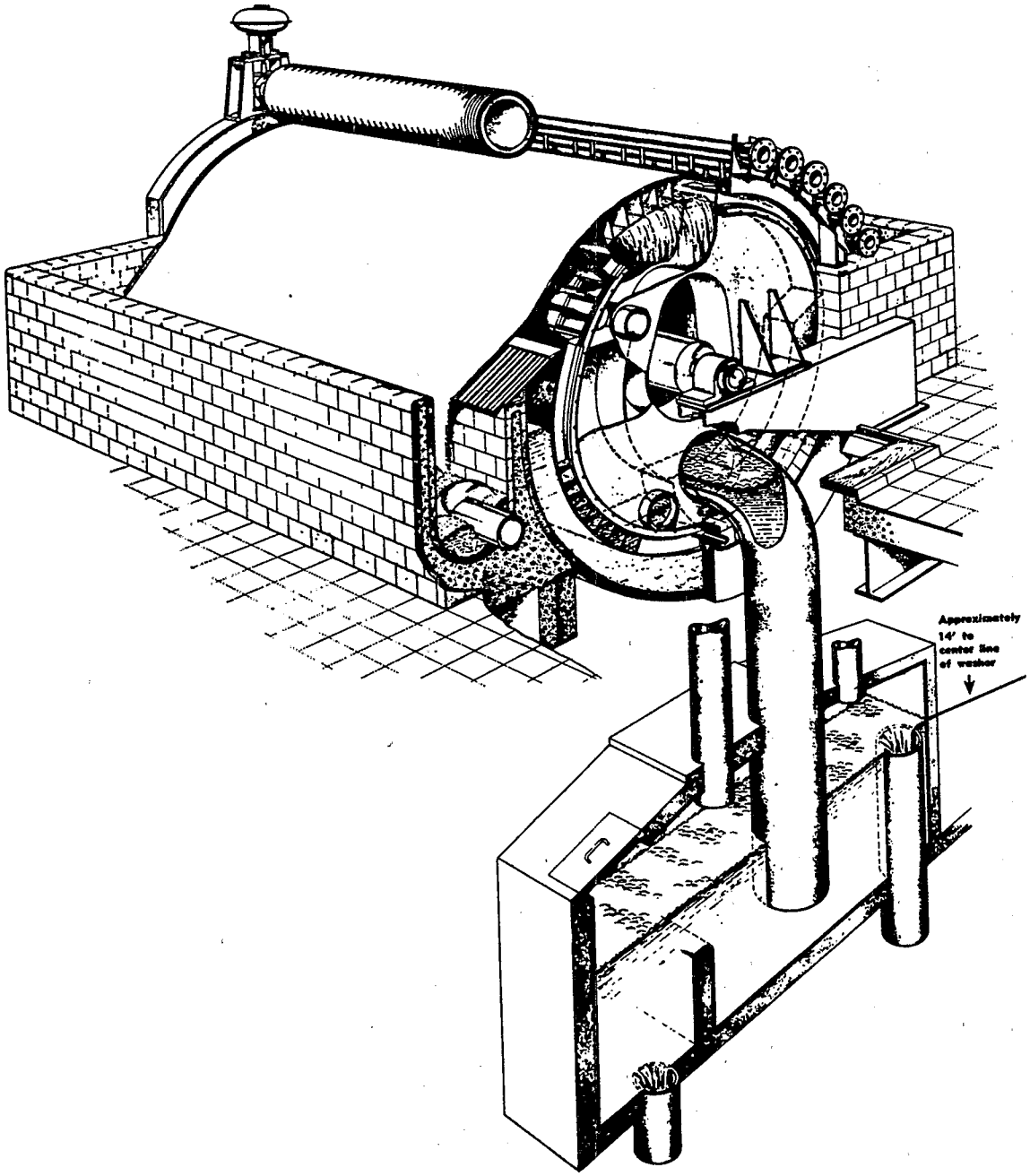

Figure 3-98. Cutaway of a vacuum washer with short drop leg.[93]

Source: Reproduced with permission of Sandy Hill Corporation.

The bleaching sequence and chemical type determine the brightness of the pulp. Table 3-30 shows the most common sequences and the brightness attainable with each sequence.

TABLE 3-30. BLEACHING SEQUENCES FOR HARDWOOD SULFATE PULP[2]

Brightness	Sequences
75	CEH
75 to 80	CEHH, CED, HCEH
80 to 85	CHEH, CEHEH, CED, CEHDP, CEHD
85 to 90	CEHD, CHED, CEDED, CEHDP
90 plus	CEHEDP

Chlorine dioxide manufacture--Because of the explosive nature of chlorine dioxide, it cannot be safely liquified or transported. Mills that use the material produce the gas on site by one of four commercial methods: Solvay, Mathieson, Rapson, and Day Kesting. The Solvay and Mathieson are the most common processes.

The Solvay process reacts sodium chlorate, sulfuric acid, methanol, and air under pressure to form chlorine dioxide, sodium sulfate, and formic acid (Figure 3-99).[94] The gas is adsorbed in a packed-bed scrubber and placed in storage. In the Mathieson process, sodium chlorate, sulfur dioxide, and sulfuric acid are reacted to form chlorine dioxide and sodium sulfate. The gas is adsorbed in a dual-stage packed-bed scrubber and placed in storage.

Chlorine cells--Chlorine is a greenish-yellow gas that is nonexplosive, nonflammable, very toxic, and a lung irritant. The gas is heavier than air (2.5 times more dense than air) and may collect in pockets where air circulation is poor.

Chlorine is received at the mill as a dry liquid and is converted to gas through vaporization for use in bleach towers. When placed in water, the gas forms hypochloric and hypochlorous acids. The acids are extremely corrosive and at 150°C rapidly attack carbon steel.

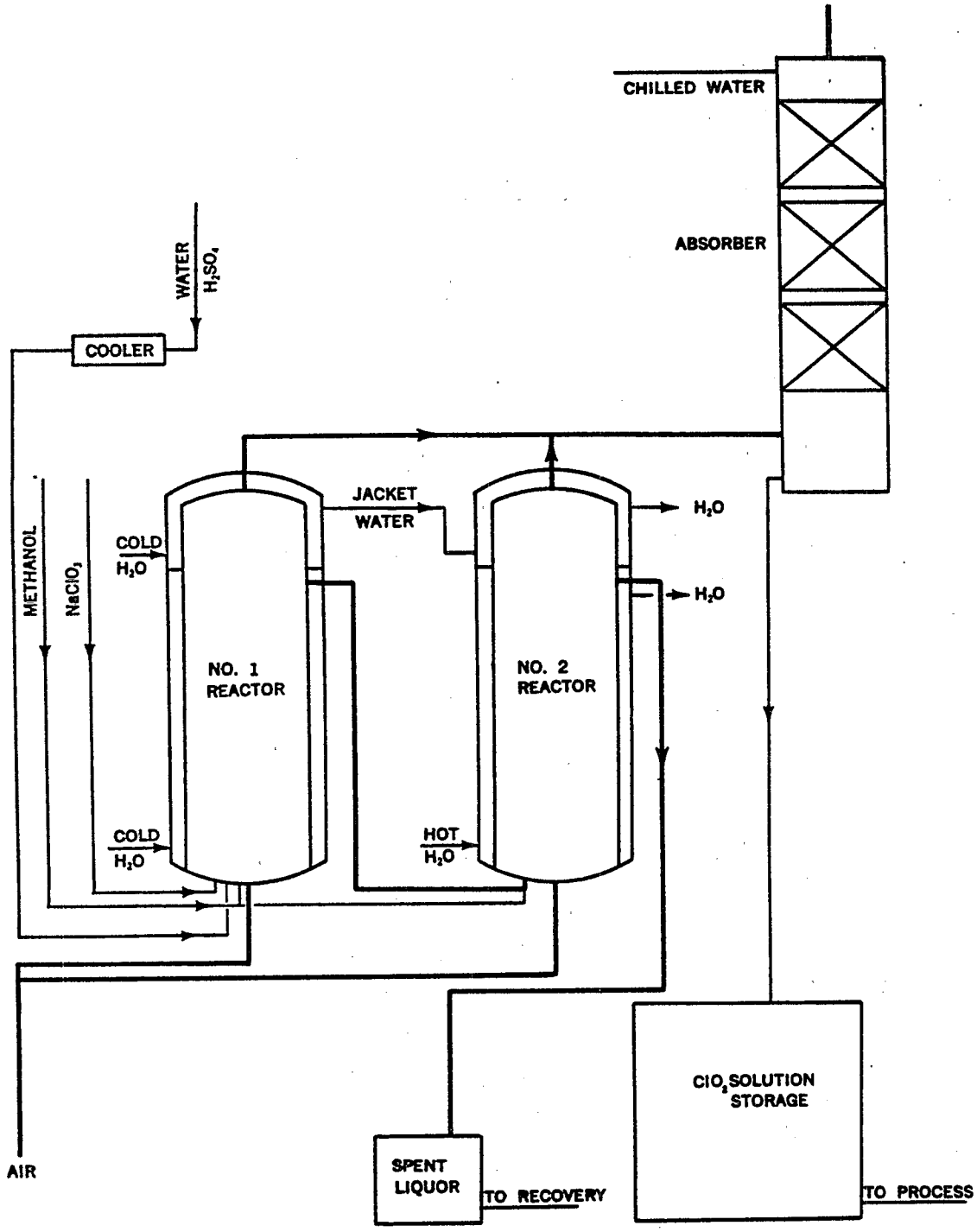

Figure 3-99. Chlorine dioxide generating system.

Source: Reproduced with permission of Taylor Instrument Company.

Many plants produce chlorine on site for use in bleaching. The most common process used for manufacture is the electrolysis of a sodium chloride solution. The reaction is expressed as follows:

$$2\ NACl + 2\ H_2O + \text{electric current} \rightarrow Cl_2 + H_2 + 2\ NaOH$$

About 12 plants manufacture chlorine by this process. The two major electrolysis systems are diaphragm and mercury cell.

In the diaphram plant, a solution of sodium chloride is passed through the cell and unreacted salt is resaturated and returned to the reactor. Spent liquor from the cell is concentrated in multiple-effect evaporations and cooled to allow crystallization of the salt. Caustic is separated and the salt filtered and washed. Chlorine released in the reaction is cooled, dryed with sulfuric acid, compressed and liquified, and placed in storage. Chlorine from the reactor has a purity of 97 to 98 percent before cleanup. Hydrogen is also recovered from the cell and either oxidized or collected for sale.

In the mercury cell, the iron cathode is replaced by a thin layer of mercury. Metallic sodium that is formed in the reaction is adsorbed on the mercury. Analgam is passed through a packed tower of graphite where it reacts with water to form sodium hydroxide. The freed mercury is returned to the cell. The hydrogen that is produced is cooled and scrubbed for use as fuel for the chemical reaction. The system must be maintained under positive pressure to prevent air inleakage.

Hypochlorite manufacture--Many plants produce hypochlorite bleaches on-site by either batch or continuous process. Calcium hypochlorite is manufactured when calcium hydroxide reacts with chlorine. Sodium hypochlorite is formed by the reaction of sodium hydroxide with chlorine. Sodium chloride is a waste reaction product and therefore must be removed.[98]

3.6.1.2 Sources of Emission and Control--

Chlorine gas and chlorine dioxide represent a potential danger in pulp mills. The gases are toxic, heavier than air, corrosive, and lung irritants. Chlorine dioxide gas is also explosive. In the bleach process, residual chlorine must be removed through washing in vacuum washers. The gases in these systems contain traces of chlorine and chlorine dioxide. The bleach tower, washers, and seal boxes are hooded and vented to remove these gases

from the work place. The rate of ventilation varies depending on the tightness of the system and number of sources tied to each system.

Control is accomplished by passing the gas stream through a packed bed scrubber using a caustic solution. Typical superficial velocities through the bed are 8 to 10 ft/s, and the liquor-to-gas ratios are 3 and 5 gal/1000 acfm.[95] The scrubbers are generally made of fiber reenforced plastics (FRP) and are designed for low temperature. Under normal conditions, the scrubbers can obtain removal efficiencies of 98 to 99 percent. Final concentration of ClO_2 in the gas stream is a function of water temperature and ClO_2 concentration (g/l) in the water.[12,99,100]

3.6.1.3 Malfunctions--

Bleach plant emissions are controlled by hooding, ventilation systems, and packed-bed scrubbers. Malfunctions to the hooding and ventilation systems normally do not occur because these sources are in work areas. Loss of hood velocity and/or ventilation rates are usually quickly corrected because of constant monitoring of the work atmosphere required for worker protection. Malfunctions in this area are therefore generally associated with the packed-bed scrubber. The most common problems involve bed pluggage and channeling, and reduction in water flow. Channeling is typically caused by bed pluggage as a result of pulp carry-over into the ventilation system or shifting of the bed packing. Channeling can also occur as a result of poor water distribution within the packed bed. As a result of the channeling, a disproportionate amount of gas is passed through a reduced bed cross section. The increased velocity results in water entrainment and reduced collection efficiency. Liquor carryover can also occur at high liquor-to-gas ratios as a result of bed flooding.

3.6.1.4 Inspection of Bleach Plants--

Inspection in the bleach plant is limited to process and control equipment specifications (Level I or Level II). Because of the toxic nature of the emissions, the inspector should avoid breathing the contaminated gas streams and use appropriate respirators while working in this area. Plant safety regulations must be strictly obeyed. Failure to observe safety requirements can result in damage to eyes, skin, and lung tissue.

The inspector should document the physical arrangement of the bleach line (towers, washers, etc.) and the chemicals used in each step. Rate of application of each bleach or extraction agent should be documented based on weight of pulp. The pulp tonnage should also be documented. Points of ventilation should be noted, and the rate of ventilation should be determined.

The design specifications of the packed-bed scrubber should be obtained. Specific design variables including cross-sectional area, liquor flow rate, superficial velocity, and gas volume should be calculated.

Specific malfunctions such as pluggage or bed flooding should be determined based on the presence of mist carry-over on high scrubber pressure drop. High chlorine penetration can be observed as a bluish-green gas emitted from the scrubber stack. Table 3-31 is a checklist for use in the inspection of the bleach plant.

3.6.2 Raw Material Handling Systems

3.6.2.1 Process Description--

Many sources in the mill generate fugitive emissions as a result of material handling. These sources are not unique to specific mills, but the number and magnitude of sources vary from mill to mill. These sources include pebble lime silos, hot lime conveying and storage, salt cake unloading and storage, starch/clay unloading and storage, salt unloading and storage, and pigment unloading and storage.

The rate of emission and process weight of these sources are highly variable. The material can be transferred through the use of bucket elevators, drag chain conveyors, screw conveyors, or a pneumatic conveying system. The sources may either be contained or open depending on mill design and age.

3.6.2.2 Sources of Emissions and Control--

Hot lime conveyor--Hot lime from the lime kiln burner end hood must be cooled before being placed in storage or returned to the slaker. The lime is typically cooled on an open drag chain conveyor. This conveyor, because of the presence of dusty lime, thermal drafts, and chain movement, is a source of fugitive particulate. Mills have controlled the emissions from this area by containment of the conveyor and hooding and venting to a fabric filter. The filter usually controls the hot lime elevator and silos. The filter must be designed to handle high temperatures as well as abrasive material. Typical

TABLE 3-31. INSPECTION CHECKLIST FOR USE IN BLEACH PLANT

Stage No.	Chemical rate on weight of pulp
_____	_____
_____	_____
_____	_____
_____	_____
_____	_____
_____	_____
_____	_____

Ventilation points

_____
_____
_____
_____
_____

Control type	_____	
Gas volume	_____	acfm
Bed cross section	_____	ft
Superficial velocity	_____	ft/s
Liquor flow rate	_____	gpm
Liquor-to-gas ratio	_____	gal/1000 acfm
Pressure drop	_____	in H_2O

Mist carry-over	_____ yes	_____ no
Visible plume	_____ yes	_____ no
Plume color	_____ yes	_____ no

bag materials are Nomex® or polyester. Systems usually are of the pulse-jet design and operate at air-to-cloth ratios of 4 to 6 acfm/ft^2.

Raw material silos--Mills receive a number of raw materials for use in the pulp and paper departments. These materials include salt cake, lime, starch, resin, and pigments. The materials are received in a dry condition by either truck or rail and are generally placed in silos. Silos may also be used for day storage within the process area. Pneumatic conveyors are generally used to transport the products. Conveying gases that are vented from the silos can contain considerable amounts of particulates. Uncontrolled emission rates can be as high as 20 gr/acfm of vented gas. The amount of gas vented can be highly variable depending on process weight and silo size. Most systems are between 300 and 500 acfm. The most common control device is the fabric filter, which is usually mounted on top of the receiving silo. The vented gases are generally between 70 to 100°F and are dry. Typical air-to-cloth ratios are between 4 and 6 acfm/ft^2.

3.6.2.3 Malfunctions--

Most malfunctions in the material handling area occur as a result of low capture velocity or fabric filter failure. Capture velocity may be reduced as a result of high-filter pressure drop (reduced gas volume) or infiltration of air into the ventilation system between the hood and fabric filter. In this case, the filter is operating at design gas volume, but the source capture velocity is very low.

Filter failure occurs as a result of the failure of the filter cleaning system, fabric structure, or dust discharge system. Cleaning system failures may occur as the result of failures in: pulse diaphragms, timers, solenoids, or an air compressor. Water in the compressed-air system commonly results in diaphragm failure and problems with dust cake release. Failure to properly clean the fabric results in high filter pressure drop and reduced ventilation volume.

Fabric failure occurs as a result of fabric abrasion, chemical damage or temperature excursion. Most fabric failures occur as pin holes in the fabric structure. Holes result from abrasion as the fiber strength is reduced. Particle penetration occurs though pinholes as the gas stream passes through the orifice. As a result of the pressure drop across the orifice, the

velocity through the opening is very high. The loss of one bag in the filter can reduce filter efficiency by several percent.

Failure of the dust discharge system results in buildup in the hoppers that eventually causes complete failure of the system. Dust discharge failure occurs as a result of component failure such as screw conveyors or air locks. Inleakage of water through flanges, welds, and door gaskets causes hopper buildup and pluggage.

3.6.2.4 Inspection--

During a Level III inspection the inspector should determine the process weight of the product being transferred. Depending on the ventilation system design, the inspector should determine the system flow rate and calculate the collector air-to-cloth ratio. If the process is a high-temperature source (hot lime conveyor), the inlet gas temperature should be measured.

Operation of the filter cleaning system should be checked by listening for the operation of the compressed-air pulse-cleaning system (pulse jet collectors). Visible emission after pulse firing indicates that a pin hole may exist in the fabric for a given row of bags. The rotary air lock and screw conveyors should be checked to determine if any hopper pluggage is occurring.

If the system can be shut down, the inspector should open and inspect the clean side of the collector tube sheet to determine if penetration is occurring. Table 3-32 is a checklist for use in a Level III inspection of material handling systems using fabric filters.

TABLE 3-32. INSPECTION CHECKLIST FOR MATERIAL HANDLING SYSTEMS

Source name _____

Product _____

Transfer rate _____ tons/h

Fabric filter type _____

Cloth area _____ ft^2

Gas volume _____ acfm

Inlet gas temp _____ ^oF

Air-to-cloth ratio _____ $acfm/ft^2$

Pressure drop _____ in. H_2O

Cleaning system operating _____ yes _____ no

Rows not cleaning _____, _____, _____, _____

Internal inspection

Clean side deposits _____ yes _____ no
Pin holes _____ yes _____ no
Oil/water or bags _____ yes _____ no

Hopper discharge

Type _____ screw _____ air lock
Functioning _____ yes _____ no

Hood capture

Visible emissions _____ yes _____ no
Hood condition _____ good _____ poor

Duct work

Corrosion _____ yes _____ no
Inleakage _____ yes _____ no

REFERENCES FOR SECTION 3

1. U.S. Environmental Protection Agency. Atmospheric Emissions From the Pulp and Paper Manufacturing Industry. EPA-450/1-73-002, September 1973.

2. Joint Textbook Committee of the Paper Industry. Pulp and Paper Manufacture, Vol. I. The Pulping of Wood, 1969.

3. Carthage Machine Company, Inc.

4. Koehring-Waterous Ltd.

5. Goderhamm Maching Mfg. Co.

6. The W. S. Tyler Company.

7. ROTEX, Inc.

8. Elliott, R. D., and W. H. deMontmorency. The Transportation of Pulp-Wood Chips by Pipeline, Pulp Paper Res. Inst. Can. WR Ind. 144, 1963.

9. Hawks, R. In-house Engineering Data. PEDCo Environmental, Inc.

10. Screw Conveyor Corporation.

11. Link Belt Limited.

12. U.S. Environmental Protection Agency. Technology Transfer. Environmental Pollution Control, Pulp and Paper Industry, Part I, Air. EPA-625/7-76-001, October 1976.

13. Kock, P. A. Treating Kraft Digester Waste Gases. M. S. Thesis, Chemical Engineering Department, Helsinki Technical University, Finland. September 12, 1972.

14. Miller, J. T. Methods for Managing Batch Digesters. Manager Pulping System Division, Rader Company, Inc.

15. Vinnis, V., and T. Kinnula. A Method to Control the Turpentine Recovery Process of Batch Kraft Pulp Digesters. TAPPI Engineering Conference, 1981.

16. Hrulfiord, B. F., and D. F. Wilson. Turpentine Concentrations in Kraft Mill Condensate Streams. Pulp and Paper Mag. of Can. Vol. 74, No. 6, June 1973.

17. Kelski, R. Kraft Mill Odor Abatement by Condensate Stripping and Waste Gas Incineration. M. S. Thesis, Wood Industry Department, Helsinki Technical University, Finland. September 18, 1969.

18. Ellerbe, R. W. Why, Where, and How U.S. Mills Recover Tall Oil Soap. Paper Trade Journal, June 25, 1973.

19. Propst, M. Improved Techniques for Soap Recovery. TAPPI Engineering Conference 1981.

20. Edwards, L., and R. Baldus. Evaluation and Design of Multiple Effect Evaporation Systems for Kraft Black Liquor.

21. Lankenau, H. G., and J. T. Badyrka. Multiple Effect Evaporators - Problem and Troubleshooting. TAPPI Engineering Conference 1981.

22. Nylander, G. Report on Forest Industry Waste Waters. Svensk Papperstidning 67(15):565-572, August 1964.

23. Leornados, G., D. Kendall, and N. Barnard. Odor Threshold Determinations of 53 Odorant Chemicals. JAPCA 19:91-95, February 1969.

24. Wilby, F. V. Variation in Recognition Odor Threshold of a Panel. JAPCA 19:96-100, February 1969.

25. Backstrom, B., H. Hellstrom, and F. Kommonen. Purification of Malodorous Sulfur Containing Condensates from Turpentine Separation, Digester Blow and Spent Liquor Evaporation at the Oy Kaukas Ab, Kraft Mill. Paperi ja Puu 52(3):113-120, 1970.

26. Morgan, I. P., and F. E. Murray. A Comparison of Air and Steam Stripping as Methods to Reduce Kraft Pulp Mill Odor and Toxicity from Contaminated Condensate. Pulp and Paper Magazine of Can. 73(5):62-66, May 1972.

27. Papic, M. M., A. D. McIntyre, and J. G. Dunsmore. Stripping of H_2S and CH_3SH from Aqueous Solutions. Pulp and Paper Magazine of Can. Vol. 74, No. 10, October 1973.

28. Rowbottom, B., and G. Wheeler. Stripping-Incineration System Cuts TRS Emissions at Cornwall Pulp and Paper Magazine of Can. Vol. 76, No. 2, February 1975.

29. Collins, T. T. The Oxidation of Sulfate Black Liquor and Related Problems. TAPPI 38:172A-175A, August 1955.

30. Trobeck, K. G. The BT System for Soda and Heat Recovery in Sulfate Pulp Mills. Paper Trade Journal 133(15):40-48, April 20, 1960.

31. Bealkowsky, H. W., and C. G. Dellaas. Stabilization of Douglas Fir Kraft Black Liquor. Paper Mill News 74(35):14-22, September 1, 1951.

32. Waltker, J. E., and H. P. Amberg. Odor Control in the Kraft Pulp Industry. Chemical Engineering Progress 66:73-80, March 1970.

33. Blosser, R. O., and H. B. H. Cooper. Survey of Black Liquor Oxidation Practices in the Kraft Industry. NCASI Atmospheric Pollution Technical Bulletin No. 39. National Council of the Paper Industry for Air and Stream Improvement, Inc., New York, New York, December 1968.

34. Padfield, D. H. Control of Odor from Recovery Units by Direct Contact Evaporative Scrubbers with Oxidized Black Liquor. TAPPI 56:83-86, January 1973.

35. Van Donkelaar, A. Air Quality Controls in a Bleached Kraft Mill. Pulp and Paper Magazine of Can. 69(18):69-73, September 20, 1968.

36. Shah, I. S., and W. D. Stephenson. Weak Black Liquor Oxidation: Its Operation and Performance. TAPPI 51:87A-94A, September 1968.

37. Sarkonen, K. V, B. F. Hrutfiord, L. N. Johonson, and H. S. Gardner. Kraft Odor. TAPPI, Vol. 53, No. 5, May 1970.

38. Perry, J. H. (ed.). Chemical Engineers Handbook, 3rd Edition. New York, McGraw Hill Book Company, pp. 1585-1586, 1950.

39. Ghisoni, P. Elimination of Odors in a Sulfate Pulp Mill. TAPPI 37: 201-205, May 1955.

40. The Venemark-Design White Liquor Scrubber. Swedish Patent 226 789, Stockholm, Sweden.

41. Morrison, J. L. Collection and Combustion of Noncondensable Digester and Evaporator Gases. TAPPI, Vol. 52, No. 12, December 1969.

42. Martin, G. C. Fiber Carryover With Blow Tank Exhaust. TAPPI, Vol. 52, No. 12, December 1969.

43. Douglass, I. B., M. Lee, R. L. Weichman, and L. Price. Sources of Odor in the Kraft Process. TAPPI, Vol. 52, No. 9, September 1969.

44. Berry, L. R. Black Liquor Scaling in Multiple Effect Evaporators. TAPPI, Vol. 49, No. 4, April 1966.

45. Blosser, R. O., and H. B. H. Cooper. Current Practices in Thermal Oxidation of Noncondensable Gases in the Kraft Industry. Atmospheric Pollution Technical Bulletin No. 34, NCASI, New York, New York, 1967.

46. Babcock and Wilcox. Steam/Its Generation and Use. 1978.

47. Passinen, K. Chemical Composition of Spent Liquors. Proceedings of the Symposium on Recovery of Pulping Chemicals. Helsinki, Finland, 1968.

48. Control of Atmospheric Emissions in the Wood Pulping Industry. U.S. Department of Health, Education, and Welfare. Contract No. CPA 22-69-18. March 1970.

49. Rydholm, S. A. Pulping Processes. Intersciences Publishers, New York 1965.

50. Personal Communication. J. Blue, Babcock and Wilcox Company.

51. Thoen, G. N., G. G. DeHaas, R. G. Tallent, and A. S. Davis. Effect of Combustion Variables on the Release of Odorous Compounds From a Kraft Recovery Furnace. TAPPI, Vol. 51, No. 8, August 1968.

52. Clement, J. L., J. H. Caulter, and S. Suda. B&W Kraft Recovery Unit Performance Calculations. TAPPI, Vol. 46, No. 2, February 1963.

53. Borg, A., A. Teder, and Bjorn Warnquist. Inside a Kraft Recovery Furnace - Studies on the Origins of Sulfur and Sodium Emission. TAPPI Environmental Conference, 1973.

54. Bhada, R. K., H. B. Lange, and H. P. Markant. Air Pollution From Kraft Recovery Units - The Effect of Operational Variables. TAPPI Environmental Conference, 1972.

55. Bauer, F. W., and R. M. Dorland. Canadian Journal of Technology 32:91, 1954.

56. Teller, A. J., and H. R. Amberg. Considerations in the Design for TRS and Particulate Recovery from Effluents of Kraft Recovery Furnaces. TAPPI Environmental Conference.

57. Lange, H. B., D. P. Pierce, and J. W. Kisner. Emissions From a Kraft Recovery Boiler - The Effects of Operational Variables. TAPPI, Vol. 57, No. 7, July 1974.

58. Hawks, R., and G. Saunders. Unpublished Data. PEDCo Environmental, Inc.

59. Lang, C. J., G. G. DeHass, J. V. Gommis, and W. Nelson. Recovery Furnace Operating Parameter Effects on SO_2 Emissions. TAPPI 56:115, June 1973.

60. Unpublished data, Kopper's Corporation.

61. Chamberlain, B., E. Lafkrantz, A. Smith, and R. Wostradowski. Eliminate Recovery Furnace H_2S Emissions by Controlling CO. Pulp and Paper Magazine of Canada, Vol. 79, No. 2, February 1978.

62. Szabo, M. F., and Y. M. Shah. Inspection Manual for Evaluation of Electrostatic Precipitator Performance. EPA-340/1-79-007, March 1981.

63. Katz, J. The Art of Electrostatic Precipitation. Precipitator Technology, Inc. 1981.

64. Hawks, R. Unpublished data. PEDCo Environmental, Inc.

65. Kopper's Corporation, Baltimore, Maryland.

66. PEDCo Environmental, Inc. Identification of Parameters That Affect the Particulate Emissions From Recovery Boilers. June 1982.

67. Personal communication. Kopper's Corporation, Baltimore, Maryland.

68. White, H. J. Electrostatic Precipitation of Flyash, Part I. Journal of the Air Pollution Control Association, January 1977.

69. LoCicero, P. M., and P. E. Sjolseth. Operating Experiences With the Ace Recovery Furnace Odor Control System. TAPPI Environmental Conference.

70. Weinaug, R. J. Jr. Early Experiences With a B&W Low Odor Recovery System. TAPPI Environmental Conference, 1972.

71. Hawks, R. Unpublished data. PEDCo Environmental, Inc.

72. Saunders, G. Unpublished data. PEDCo Environmental, Inc.

73. Personal communication. Buell Envirotech, Inc.

74. A Manual for the Use of Electrostatic Precipitators to Collect Flyash Particles. EPA-600/8-80-025, May 1980.

75. Henderson, J. S. Final Survey Results for Noncontact Recovery Boiler Electrostatic Precipitators. J. E. Sirrine Co. TAPPI, Vol. 63, No. 12, December 1980.

76. Gooch, V. P. Low Temperature Corrosion by Sulfuric Acid in Power Plant Systems. Southern Research ESP Symposium, February 1971.

77. Rylands, J. R., and J. R. Jenkinson. The Acid Dew Point. Journal of Institute of Fuel, June 1974.

78. Stockman, L., and A. Tansen. Gvensk Paperstidn 62:907-914 (1959) Abstr. Bull. Inst. Paper Chem., 30;1164-1165 (1960). The Paper Industry, p. 215, June 1960.

79. Zarfoss, J. R. Clean Air From Paper Mill Recovery Boilers Without Corrosion. Environmental Elements Corporation, Baltimore, Maryland. National Association of Corrosion Engineers, IGCI. Atlanta, Georgia, 1976.

80. Hawks, R. Unpublished data. PEDCo Environmental, Inc.

81. Personal communication. J. Blue, Babcock and Wilcox.

82. Timmerman, J. Physio-Chemical Constant of Primary Systems in Concentrated Systems, Vol. 3, Intersciences Publishers, New York, 1960.

83. Sallack, J. A. An Investigation of Explosions in the Sode Smelt Dissolving Operation. Canadian Pulp and Paper Association, Technical Section, June 1955.

84. Hawks, R. Unpublished data. PEDCo Environmental, Inc.

85. Campbell, A. J. Factors Affecting White Liquor Quality: Green Liquor Concentration, Drugs Concentration and Lime Dosage. Pulp and Paper Magazine of Canada. Vol. 82, No. 4, April 1981.

86. Kramm, D. J. Selection and Use of the Rotary Lime Kiln and Its Auxilliaries - 11. Paper Trade Journal, August 21, 1972.

87. Dorr-Oliver, Inc.

88. Blosser, R. O., A. L. Caron, R. P. Fisher, M. E. Franklin, W. J. Gillespie. Factors Affecting TRS Emissions From Lime Kilns. TAPPI Environmental Conference.

89. Hawks, R. Unpublished data. PEDCo Environmental, Inc.

90. Schwieger, B. Power Magazine, Vol. 121, No. 2, February 1977.

91. Burback, et al. Combustion Engineering, Power Magazine. December 1977.

92. Three Stage Bleach Plant, Improved Machinery Co.

93. Vacuum Washer. Sandy Hill Corporation.

94. Solvay Chlorine Dioxide Generating System. Taylor Instrument Companies and Allied Chemical Company.

95. Hawks, R. Unpublished data. PEDCo Environmental, Inc.

96. Rapon, W. H., C. B. Anderson, and D. W. Reeve. The Effluent-Free Bleached Kraft Mill, Part VI, Substantial Substitution of ClO_2 for Cl_2 in the First Stage of Bleaching. TAPPI Alkaline Pulping Conference 1975.

97. Gall, R. J., H. D. Partridge, D. J. Josyka, and G. R. Roseman. Sequential Chlorination - Its Impact on the Environment. TAPPI Environmental Conference, 1975.

98. Reeve, D. W., and W. H. Rapson. The Recovery of Sodium Chloride From Bleached Kraft Pulp Mills. Pulp and Paper Magazine of Canada, Vol. 71, No. 13, July 3, 1970.

99. Ekono Oy, Helsinki, Finland.

100. Haller, I. F., and W. W. Northgraves. TAPPI 38:199, April 1955.

SECTION 4

COMPLIANCE DETERMINATIONS

Historically, the level of inspections practiced by State and local agencies consisted of visible emission evaluations and a quick walkthrough of the plant. The purpose of these inspections was to provide a quick determination of compliance that could be easily documented and defended, and that would require a minimum of resources. This level of inspection, previously referred to as Level I or II, was effective in documenting major occurrences of noncompliance especially with respect to visible emission standards.

In general, these inspections are effective screening tools in determining potential visible emission violations or potential noncompliance with such permit stipulations as firing rate, process rate, or fuel characteristics (sulfur, ash, etc.). Most agencies use the visible emission standard in lieu of requiring a stack test to determine compliance with an applicable particulate emission standard. As a result of this practice, many sources were unofficially allowed to operate at particulate emissions levels above the applicable regulatory limit (i.e., up to the point of violation of visible emission standards). In addition, visible emission observations were rarely made when stack tests were conducted to determine compliance with the particulate standards.

In many cases, certification stack tests are conducted under optimum process and control equipment conditions. These conditions often do not reflect normal day-to-day operating practices or conditions. A review of stack tests conducted on recovery boilers indicates a serious deficiency in recording process or control equipment parameters that would allow determination of representative conditions.[1] For these and other reasons, it is apparent that the use of visible emissions and annual certification stack tests are not an effective method of determining the compliance status of many sources in a kraft pulp mill.

Although the above methods ensure a certain level of compliance and maintenance of control devices at least on a yearly basis, many operating

and maintenance problems occur between inspections and stack tests that can result in serious noncompliance and which have an adverse impact on the ambient air quality. It has been shown that the application of a more comprehensive evaluation of process and control equipment can document serious operation and maintenance problems that in many cases have not been previously noted by plant personnel.[2]

The more comprehensive inspection technique is referred to as a Level III Inspection. This level of inspection helps to ensure continuous compliance and is based on the application of basic engineering logic to process equipment and control equipment operation. Level III Inspections require a basic understanding of the process and control equipment variables or parameters that influence emissions and a thorough understanding of the factors that influence control equipment performance. The inspector is asked to document a number of operating parameters or variables and compare changes in these parameters with a known reference point. This is very similar to the procedures that are used in evaluating visible emissions. For example, an increase in opacity above a given standard can be an indication of an increase in particulate emissions.

Level III Inspections typically rely on more than a single indicator of performance unless the emission rate is dominated by a single variable. Major changes in ESP power input or major increases in ESP gas volume are considered strong indicators of ESP performance. In most applications a number of parameters are used to support the determination of compliance or noncompliance. When the parameters are contradictory, a stack test is required to certify compliance. If a stack test is conducted, the inspector must be assured that the test is conducted under the identical conditions (process and control equipment) that were observed at the time of noncompliance.

The use of comprehensive inspections requires that the inspector have an established baseline for each parameter during a period of known compliance. These parameters are generally established during a performance stack test or are based on specific design conditions. Once the baseline is established, the inspector can return to the plant at a later date and determine the degree of continuous compliance by evaluating certain parameters.

To ensure complete and accurate documentation of parameters or variables during the stack test, the inspector should observe stack tests on all sources

within his inspection jurisdiction. Although the primary purpose for observing the emission test is to verify the representativeness of the test and that acceptable testing procedures are being followed, the process operation during the test is of critical interest to the inspector from several aspects.

During the initial compliance test, the inspector usually can determine the range of process and control equipment parameters that the plant operator and control equipment supplier consider optimum to achieve compliance with the applicable emission standards. This information is useful not only for establishing representative operating conditions during a specific test, but is also useful in selecting or evaluating operating permit conditions and in assisting the inspector in evaluating future performance. The overall process of establishing a benchmark for the process operation is commonly referred to as "baselining."

4.1 ESTABLISHING A BASELINE

Establishing a baseline involves documenting all pertinent operating parameters as they relate to the emission characteristics of the source. This includes both the process and control equipment parameters. The baseline provides a fixed point of operation or a narrow range of operating parameters against which other determinations can be made. The concurrent emission test provides a documented emission rate(s) that may be correlated with process and control equipment operating characteristics derived during the test. The baseline test is useful in conducting subsequent routine inspections.

The baseline may be used for several purposes. First, for existing sources, baseline values may be obtained prior to a stack test to assist in establishing representative operating conditions. The normal range of values may be recorded during a period prior to a test, and these values may be specified in a testing protocol to establish representative conditions or used as a starting point in negotiating the testing protocol with the plant. Comparison of documented compliance test parameters with those specified in the protocol helps to establish whether the process and control equipment were operating at the specified representative conditions. Second, for new sources, the initial compliance test establishes the operating parameter values that

correspond with the measured emission rate. These values can then be compared with the design values. This provides a fixed reference point for comparison to future operating data. Third, the values of the baseline parameters provide data for evaluating routine inspection data. By knowing the effects of the various process and control equipment parameters on emissions, one can make comparisons to evaluate the direction and magnitude of any changes in performance. Fourth, documentation of the baseline data will assist in setting specific ranges on important parameters for possible inclusion in an operating permit (if required by the agency). Finally, the baseline test provides a fixed reference point for comparing long-term performance trends. Proper evaluation of the baseline data may assist in the establishment of preventive maintenance schedules as well as provide an indication of any design or installation problems. In addition, the rate at which the normal operating parameters may vary from baseline values may assist the agency in scheduling routine inspections and periodic compliance tests.[3]

The types of data that should be recorded are dependent on site-specific factors such as the type of source or process, and the control equipment installed. For that reason, the agency observer and the inspector (if different from the observer) should become aware of the site-specific factors that affect the emissions, and take steps to obtain that data. In some instances it will be difficult to separate and correlate all effects of the variations in the process and control equipment parameters. By acquiring as complete an understanding as possible of the facility production process and its controls prior to the stack test, however, the agency observer can frequently identify key parameters that will have the most influence on emission levels. It is strongly recommended that the baselining only focus on those parameters that have a documented affect on the emission levels rather than on all possible parameters that might influence the emission levels. Collection of data that have no significance can be inefficient and counterproductive. Considerable effort can be involved in recording and analyzing all process and control equipment data normally available at a facility. The inspector must be selective as to which data to collect. Also, certain data may be of a proprietary nature and considered to be confidential business data that will require special handling and safekeeping. It is best not to incur this responsibility if it can be avoided.

Although it is suggested that the agency collect all pertinent data, the agency should be certain that 1) the data are needed and a change in its value has an effect on the operation of the source and 2) the data are accurate to the point that the recorded value has some meaning. When an operation and maintenance program or permit to operate is issued based on a range of process and control equipment parameters, the agency must be able to measure these parameters. As a result, maintenance and calibration of the key parameter instrumentation is needed prior to the performance test. Additional instrumentation may also be needed in some cases.

During the baseline source test, the agency observer must essentially conduct an inspection to obtain all the operating parameters for evaluation. The only major difference between this and any routine inspection is that emission testing is occurring simultaneously. Thus, the observer cannot spend all of the time observing the test because of other responsibilities. Process and control equipment parameters should be checked throughout the test. Data should be obtained for the week previous to and the week after the stack test to demonstrate representative conditions during the test. In many cases two agency inspectors or observers may be needed to observe the baseline testing. The services of the field inspector responsible for that facility is strongly recommended to enhance the field inspector's knowledge and relationship with the facility.

The use of the baseline for documenting deviations from normal conditions requires the establishment of a logic system for each process or control device operating parameter used. A substantial change in the parameter is evaluated based on its impact on the overall emission levels. For example, an increase in recovery boiler firing rate would be evaluated because of its impact on the uncontrolled emission rate from the boiler.

The technical data provided in previous sections on control device malfunctions and process conditions are intended to provide the inspector with the technical background to evaluate the emission level changes. The evaluation may be subjective in many instances. In other cases, sufficient technical data are available to accurately predict the emission levels.

The data obtained are usually sufficient to allow the inspector to negotiate corrective action with respect to the process and control equipment without the expense of conducting a performance stack test. Many

deficiencies may be corrected as a result of increased or redirected maintenance activities. The ability of inspectors to negotiate such corrective action varies from agency to agency. The inspector must operate within his agency's guidelines with regard to negotiating compliance agreements or issuing notices of violation (NOV). In some cases the corrective action can be completed before the notices can be drafted and formally issued.

The following is a summary of key operating parameters that the inspector may use to evaluate the overall performance of the process/control equipment for each major piece of process or control equipment.

4.1.1 Recovery Boiler

The particulate and SO_2 emission rates from the recovery boiler are interrelated because the primary method of SO_2 and TRS control is to convert these pollutants to sodium sulfate, which increases the particulate emission rate. The primary parameters that affect particulate emissions are: firing rate, primary air rate, excess air, smelt bed temperature, ESP power, ESP superficial velocity, and flue gas oxygen. A shift in many of these parameters indicates an increase in emissions. In many cases these shifts in parameters can be used in support of a requirement to take corrective action or to conduct a performance stack test. Table 4-1 summarizes the effects of recovery boiler and ESP operating parameters on particulate and TRS emission rates.

4.1.2 Smelt Tank

The primary parameters that may be used to determine compliance from the smelt dissolving tank are connected with the rate of particulate generated and the condition of the control devices. Specifically the rate of generation of particulate is related to smelt rate (i.e., boiler firing rate and reduction efficiency) and the amount of particle reentrainment. The condition of the control device is related to such variables as superficial velocity and water flow rate. Table 4-2 summarizes the effects of smelt tank and venturi scrubber operating parameters on particulate and TRS emission rates.

4.1.3 Lime Kiln

Uncontrolled particulate emission rates from the kiln are primarily affected by parameters that affect the superficial velocity through the kiln, the particle size of the kiln dust, rate of evolution of volatile particulate,

TABLE 4-1. SUMMARY OF THE EFFECTS OF RECOVERY BOILER AND ESP OPERATING PARAMETERS ON PARTICULATE AND TRS EMISSION RATES

Parameter	Change	Effect on particulate emission rate	Effect on TRS emission rate
Firing rate	Increase	Increase	Increase
Primary air	Increase	Increase	Decrease
Excess air	Increase	Increase	Decrease
Smelt bed temperature	Increase	Increase	Decrease
ESP power input	Decrease	Increase	None
ESP superficial velocity	Increase	Increase	None
Flue gas oxygen	Increase	Increase	Decrease[a]
Primary air temperature	Decrease	Decrease	Increase
Visible emissions	Increase	Increase	None
Black liquor sulfidity	Increase	None	Increase

[a]If increase in oxygen is a result of an increase in primary air volume.

TABLE 4-2. SUMMARY OF THE EFFECTS OF SMELT TANK AND VENTURI SCRUBBER OPERATING PARAMETERS ON PARTICULATE AND TRS EMISSION RATES

Parameter	Change	Effect on particulate emission rate	Effect on TRS emission rate
Firing rate (smelt rate)	Increase	Increase	Increase
Shatter jet steam rate	Increase	Increase	Increase
Mesh pad superficial velocity	Increase	Increase	None
Mesh pad back flush rate (caustic)[a]	Decrease	Increase	Increase
Packed bed water flow (caustic)[a]	Decrease	Increase	Increase
Venturi scrubber water flow	Decrease	Increase	None
Pressure drop	Decrease	Increase	None
Visible emissions	Increase	Increase	None

[a]It should be noted that all smelt vent control devices do not use caustic. In some cases only water is used.

and the feed rate to the kiln. The superficial velocity is a function of kiln firing rate and temperature profile. The rate of evolution of volatile particulate is related to slurry feed rate and the amount of soda present in the slurry. Parameters affecting the control device are liquid-to-gas ratio, pressure drop, and particle size. TRS emissions are related to mud washing efficiency (% sodium sulfide expressed as Na_2O), flue gas oxygen, and lime mud slurry moisture. The cold end temperature has an effect on TRS emission levels. Both the kiln excess air and temperature profile down the kiln influence the residence time and oxidation rate of TRS compounds where the kiln is used as a control device. Where sulfides are present in an insoluble form and they cannot be removed through washing, lime mud oxidation may be required. Table 4-3 summarizes the effects of lime kiln and scrubber operating parameters on particulate and TRS emission rates.

4.1.4 Slaker

The rate of green liquor and calcium oxide reacted in the slaker has the strongest effect on uncontrolled particulate emissions. The amount of heat released (i.e., steam generated) and the degree of agitation are related to the reaction rates. The condition of the scrubber (i.e., water flow rate, liquor gas ratio, and pressure drop) also affects the emission rate. Table 4-4 summarizes the effects of slaker and venturi scrubber operating parameters on particulate emission rates.

4.1.5 Turpentine Condenser and Multiple-Effect Evaporators

The rate of TRS emissions from multiple-effect evaporators and the turpentine condenser is primarily a function of noncondensable gas volume and tail gas condenser final temperature. The equilibrium vapor pressure of TRS in the gas stream is also a function of temperature. Table 4-5 summarizes the effects of turpentine condenser and multiple-effect evaporator operating parameters on TRS emission rates.

4.1.6 Blow Tank and Hot Water Accumulator

The rate of TRS emissions from the hot water accumulator is a function of digester operation, the condition of the primary and secondary condensers, and blow gas volume. The parameters are generally so interrelated that a single

TABLE 4-3. SUMMARY OF THE EFFECTS OF LIME KILN AND SCRUBBER OPERATING PARAMETERS ON PARTICULATE AND TRS EMISSION RATES

Parameter	Change	Effect on particulate emission rate	Effect on TRS emission rate
Production rate	Increase	Increase	Increase
Firing rate	Increase	Increase	None
Kiln temperature (firing end)	Increase	Increase	None
Kiln oxygen	Decrease	Decrease	Increase
Slurry moisture	Increase	Decrease	Increase
Mud sodium sulfide content (Na_2O)	Increase	Increase	Increase
Scrubber L/G ratio	Decrease	Increase	None
Scrubber pressure drop	Decrease	Increase	None
Scrubber throat velocity	Decrease	Increase	None
Water maldistribution venturi throat		Increase	None
Visible emissions	Increase	Increase	None

TABLE 4-4. SUMMARY OF THE EFFECTS OF SLAKER AND VENTURI SCRUBBER OPERATING PARAMETERS ON PARTICULATE EMISSION RATE

Parameter	Change	Effect on particulate emission rate
Causticizing rate	Increase	Increase
Shower water flow	Decrease	Increase
Venturi L/G ratio	Decrease	Increase
Venturi pressure drop	Decrease	Increase
Visible emissions	Increase	Increase
Venturi throat velocity	Decrease	Increase

TABLE 4-5. SUMMARY OF THE EFFECTS OF TURPENTINE CONDENSER AND MULTIPLE-EFFECT EVAPORATOR OPERATING PARAMETERS ON TRS EMISSION RATE

Parameter	Change	Effect on TRS emission rate
Tail gas condenser inlet water temperature	Increase	Increase
Tail gas condenser water flow rate	Decrease	Increase
Noncondensable gas volume	Increase	Increase
Vent gas temperature	Increase	Increase

parameter analysis is not effective in predicting emissions. Generally, however, TRS emissions will increase if the condensers are plugged.

4.2 CALCULATION OF EMISSION RATES

In most cases the determination of compliance is based on a series of primary control performance indicators that may not generally be quantifiable. In specific applications, however, the inspector may make reasonable estimates of emission rates using these indicators. The following methods have been demonstrated to be effective in calculating or estimating the emission rates for various emission sources.

4.2.1 TRS Sources

Because the final temperature and pressure of noncondensable gases define the partial vapor pressure of TRS compounds emitted from the condenser, these values taken in conjunction with gas flow can be used to calculate the emission rate. As discussed in Section 3, the concentration of TRS gases is directly related to the condenser outlet temperature. If the inspector can determine the gas volume and temperature, the emission rate in pounds per hour may be calculated by the product of concentration and flow (i.e., $g/m^3 \times m^3/min \times 60\ min \div 453.6\ g/lb$). This method can be applied to such sources as the turpentine vent and multiple effect evaporators.

4.2.2 Emissions from Recovery Boilers

The efficiency of the ESP serving the recovery boilers can be determined by using variables that define the power input to the system and the gas volume being treated. The equation that is generally applied is a modified version of the Deutsch-Anderson equation.[4] The equation contains a constant that must be estimated or calculated from a previous baseline performance test. A detailed discussion of the use and limitations of the equation are provided in Section 3.3. In order to apply this method, the inspector must be able to determine the flue gas volume passing through the ESP and the power input to the ESP. The inspector must also be able to determine that the unit is in reasonably good operating condition (no gross gas maldistribution, power distribution imbalances, high resuspension rates, or high rapper reentrainment) because certain occurrences can cause the Deutsch-Anderson equation to over-predict efficiency.

The value to be used in the equation is determined from previous baseline tests or it may be estimated. Typical values for k range from 0.1 to 0.25.[5] It is usually advantageous to request that stack tests be performed over a range of boiler loads (gas volume) and at several ESP power input levels. This allows the inspector to determine if the value of k remains reasonably constant over the range of normal operating conditions. The use of the Matts-Öhnfeldt version of the efficiency equation has been shown to provide a better correlation where units are designed for high specific corona power levels (> 500 W/1000 acfm).[1]

Figure 4-1 shows a method of calculating ESP efficiency based on migration velocity and plate area. This method is useful in reviewing design capabilities of an ESP but may not be accurate for evaluating a unit that is currently in service. This method is limited because the migration velocity is not constant over the operating range of the unit. As the power input to the unit is decreased, the migration velocity is reduced. The lower section of Figure 4-1 shows the method to be used in calculating emissions using ESP power input and gas volume. Power input is calculated from secondary meter readings. The gas volume is calculated from a modified F-factor or measured with a Pitot tube. The most serious deficiency in applying this method is the determination of the uncontrolled emission rate from the boiler. As stated previously, the uncontrolled particulate emission rate is not constant and is a function of the boiler combustion characteristics. The emission rate is a compromise between particulate as sodium sulfate and SO_2. If the level of SO_2 can be determined to be fixed over the operating range of interest, the particulate emission rate may be assumed to be reasonably constant (Section 3.3.1). If inlet performance stack tests are available, they should be used in the mass emission rate calculation.

4.2.3 Power Boilers

Emission rates from power boilers using an ESP may be calculated in a similar manner to the one used for recovery boilers. The restrictions and cautions are the same in applying the equations. In general, the values of k and migration velocity are different from those applied to recovery boilers (Section 3.5).

Given:

Boiler: Manufacturer B-W
Indirect contact
1200 ADTP/day
Firing rate 350 gpm at 61.5% BLS (149,820 lb/h BLS)

ESP: Kopper's
Wet bottom
2 chambers
3 fields
Plate area = 151,200 ft^2
Superficial velocity = 3.11 ft/s
SCA = 386 ft^2/1000 acfm
Gas volume = 392,000 acfm (6533.3 acfs)
Gas temperature = 415^oF
Migration velocity = 8.0 cm/s (0.262 ft/s)
Uncontrolled emission rate = 3.2 gr/acfm

Calculate:

1. Allowable emission (AL)

AL = 3 lb/3000 lb BLS

$$AL = \left(\frac{149,820}{3000}\right) \times 3 = 149.82 \text{ lb/h}$$

2. Uncontrolled Emission Rate (UN) based on inlet loading

$$UN = \frac{(392,000 \text{ acfm})(3.2 \text{ gr/acfm})}{7000 \text{ gr/lb}} = 60 \text{ min}$$

UN = 10,752 lb/h

3. Actual Emission per Deutch-Anderson equation for ESP efficiency (AE)

a. Design efficiency for ESP per Deutch-Anderson equation:

$$\eta = (1 - e^{-w\frac{A}{v}})\ 100$$

where η = collection efficiency, %
w = migration velocity, ft/s
A = electrode collecting area, ft^2
v = gas volume, acfs

Figure 4-1. Calculation of kraft recovery boiler ESP efficiency.

$$\eta = (1 - e^{-[0.26\ (\frac{151,200}{6533.3})]})\ 100$$

$$\eta = (1 - e^{-6.017})\ 100$$

$$\eta = (1 - 0.002437)\ 100$$

$$\eta = 99.75\%$$

$$AE = UN \times (100 - \eta)/100$$

$$AE = (10,752)\ \frac{(100 - 99.75)}{100}$$

$$AE = 26.20\ lb/h$$

b. Actual Efficiency for ESP using Modified Deutsch-Anderson equation

$$\eta = 100\ [1 - e^{-0.06\ k\ (P/Q)}]$$

given: power input 135,000 watts
gas volume 392,000 acfm
k = 0.135 from previous stack tests

$$\eta = \left[1 - e^{-0.06(0.135)(\frac{135,000}{392})}\right]\ 100$$

$$\eta = \left[1 - e^{-3.099}\right]\ 100$$

$$\eta = \left[1 - 0.0450\right]\ 100$$

$$\eta = 95.49\%$$

$$AE = UN \times (100 - \text{collection efficiency})/100$$

$$AE = (10,752)\ (\frac{100 - 95.49}{100})$$

$$AE = 484.6\ lb/h$$

Figure 4-1. Calculation of kraft recovery boiler ESP efficiency. (Continued)

4.3 STACK TEST METHODS

Each State or local agency has adopted stack test requirements that may be used to demonstrate compliance with particulate, TRS, SO_2, and visible emission standards. The following is a description of the federally approved reference methods.[6]

4.3.1 Particulate Sampling

Particulate sampling is generally accomplished through the use of Reference Method 5 or 17. Method 17 uses isokinetic sampling with mass weight determined by filter catch. The filter is at gas stream equilibrium temperature and moisture conditions within the source stack. Method 5 requires extractive gas filtering with the gas stream passing the filter to be no greater than $250^{o}F \pm 48^{o}F$. Both methods use isokinetic sampling methods with gas moisture determination by condensation in the impingers and adsorption in the silica gel. Sample volume is measured on a dry basis with a dry gas meter.

The use of an impinger catch in calculating the mass emission rates vary from state to state with several States requiring back-half inclusion and some only counting material in the first impinger.

For most direct-contact recovery boilers, the gas stream temperature is close to the required temperature for Method 5 filters, and generally there is reasonable agreement between Methods 5 and 17. In noncontact systems the gas temperature is higher ($>425^{o}F$) and the gas stream must be cooled in Method 5 sampling. Because of the presence of condensables, the Method 5 catch may be higher than a comparable Method 17 catch.

In order to account for the higher gas temperature and to adjust the filter catch, Method 17 requires the addition of 0.004 gr/dscf to the measured value. A maximum stack temperature of $400^{o}F$ should also be specified.

The inclusion of a back-half catch results in an increase in the measured mass emission rate. A portion of this catch is the result of condensable particulate passing through the filter, but in some cases the weight may be due to artifact formation.

In general, there are no technical problems in applying Method 5 or 17 to any particulate-emitting source in the mill. Strict adherence to the

sample methods is required, however, to give reproducible and enforceable results.

The most serious deficiencies in the sampling protocol of the pulp mill stack tests fall into two areas 1) failure to fully document process conditions as required under 40 CFR 60, Appendix A, to prove representativeness of the test conditions and 2) sampling of scrubber stacks where severe tangential flow is occurring. Item one has been discussed in other sections of this manual and does not require further comment.

In regard to item two, most kraft mills use low-energy dynamic or venturi scrubbers that use cyclone separators to remove water droplets from the gas stream. The separator creates a highly tangential flow pattern that almost without exception cannot be sampled in accordance with the requirement of EPA Reference Methods 1 and 2. Straightening vanes or other methods must be used to reduce the tangential flow to acceptable levels to complete the test. Reference Methods 5 and 17 are provided in Appendix B.

4.3.2 TRS Sampling

TRS sampling is generally accomplished through Methods 16 and 16A. Method 16 is a semicontinuous method that determines sulfur compound emissions using the principle of gas chromatographic separation and flame photometric detection. The gas sample is extracted from the gas stream and diluted with clean dry air. A portion of the sample is analyzed for hydrogen sulfide (H_2S), methyl mercapton (MeSH), dimethyl sulfide (DMS), and dimethyl disulfide (DMDS). The total of these compounds is defined as TRS. Moisture, carbon monoxide, carbon dioxide, particulates, and SO_2 are interferences for this method and must be quantified or removed from the gas stream before analysis. Method 16 is provided in Appendix C for reference.

Method 16A is the preferred method for TRS sampling because of its simplicity. The gas sample is extracted from the stack, and SO_2 is selectively removed from the sample by use of a citrate buffer solution. The gas stream is then oxidized and analyzed as SO_2 using a barium-thorin titration procedure. The analysis for SO_2 is identical to that used in Reference Method 6. Method 16A is also provided in Appendix C.

4.3.3 SO_2 Sampling

Sampling for SO_2 is generally accomplished through use of a wet chemistry method that selectively adsorbs and reacts with SO_2. The Reference Method is EPA Method 6. A gas sample is extracted from the gas stream, and the SO_2 and sulfuric acid mist are separated. The SO_2 is measured by the barium-thorin titration method. Interferences with the method are free ammonia, water soluble cations, and fluorides. Cations and fluorides are removed by a glass wool filter and an isopropanol bubbler. Ammonia interferes by forming a particulate sulfide that reacts with the indicator. The presence of ammonia can be detected by observing a white particulate precipitant in the isopropanol bubbler. Method 6 is provided in Appendix D.

4.3.4 Visible Emissions

Compliance with visible emission standards is usually documented through the use of Method 9. The opacity is determined visually by a qualified observer. In general, the observer visually determines the opacity of an emitted plume at 15-second intervals for a period of 6 minutes or as required by agency policy. The averaging time for the observations in Method 9 is 6 minutes. The averaging time varies from state to state, and an exclusion period above the standard is usually permitted. The presence of uncombined or condensed water is an interference, and the method cannot be applied in these circumstances. Observations must be made before the point of steam condensation (detached plume) or after the point of steam dissipation. Observations must be conducted with the sun angle behind the observer within a specified angle and with the plume imposed on a contrasting background. Method 9 is provided in Appendix E for reference.

REFERENCES FOR SECTION 4

1. PEDCo Environmental, Inc. Identification of Parameters That Affect the Particulate Emissions from Recovery Boilers. June 1982.

2. PEDCo Environmental, Inc. Development of Pilot Inspection System for Virginia Air Pollution Control Commission, Interim Results. November 1982.

3. Saunders, G., and B. DeWees. Observing and Establishing Plant Operating Baseline Conditions During Compliance Emission Tests. PEDCo Environmental, Inc.

4. White, H. J. Electrostatic Precipitation of Flyash, Part I. Journal of the Air Pollution Control Association. January 1977.

5. Hawks, R., and G. Saunders. Unpublished data. PEDCo Environmental, Inc.

6. U. S. Environmental Protection Agency. Standards of Performance for New Stationary Sources. EPA-340/1-82-005, June 1982.

APPENDIX A

SUMMARY OF STATE REGULATIONS

TABLE A-1. SUMMARY OF SELECTED VISIBLE EMISSION, PARTICULATE, SO_2, AND TRS EMISSION LIMITS APPLICABLE TO SOURCES WITHIN A KRAFT PULP MILL

State	Particulate general process - regulations[1]	Visible emission[2]	SO_2--general process	SO_2--fuel burning[3]	Particulate--fuel burning[3]	Particulate--kraft pulp mills[4]	Total reduced sulfur--kraft pulp mills[4]
Alabama	Class II--existing and all new $E = 4.10\ P^{0.67}$ $P < 60{,}000$ lb/h $E = 55.0P^{0.11}-40$ $P > 60{,}000$ lb/h Class I--existing $E = 3.59\ P^{0.62}$ $P \leq 60{,}000$ lb/h $E = 17.31\ P^{0.16}$ $P > 60{,}000$ lb/h	20% (1)		Class I 1.8 lb/10^6 Btu Class II 4 lb/10^6 Btu	Class I--existing and all new $E = 1.38\ Q^{-0.44}$ Class II--existing $E = 3.109\ Q^{-0.589}$	Rec. furn. 4 lb/TADP Smelt tank 0.5 lb/TADP lime kiln 0.1 lb/TADP	1.2 lb/TADP[5]
Arizona	$E = 4.10P^{0.67}$ $P \leq 60{,}000$ lb/h $E = 55.0P^{0.11}-40$ $P > 60{,}000$ lb/h	40% (2)	10% of Sentering the process	New 0.8 lb SO_2/10^6 Btu Oil or coal existing 1.0 lb SO_2/10^6 Btu oil or coal	$Q \leq 4200 \times 10^6$ Btu/h $E = 1.02Q^{0.769}$ $Q > 4200 \times 10^6$ Btu/h $E = 17.0Q^{0.432}$		

(continued)

TABLE A-1 (continued)

State	Particulate general process - regulations[1]	Visible emission[2]	SO_2--general process	SO_2--fuel burning[3]	Particulate--fuel burning[3]	Particulate--kraft pulp mills[4]	Total reduced sulfur--kraft pulp mills[4]
Arkansas	P = 100 lb/h, E = 2.5 lb/h; P = 1.0×10^6 lb/h; E = 100 lb/h; P = 1.0×10^6 lb/h; E = 700 lb/h	New 20% (1) Existing 40% (2)			Uses general process weight rate for solid fuel	Source by source Rec. furn. 80 - 800 lb/h Smelt tank 25 - 55 lb/h Lime kiln 40 - 110 lb/h	
Florida	$E = 3.59P^{0.62}$ $P \leq 60{,}000$ lb/h $E = 17.31P^{0.16}$ P > 60,000 lb/h	New 20% (1) Existing 40% (2) Carbonaceous fuel 30% (1.5)		> 250×10^6 Btu/h Liquid fossil 2.75 lb $SO_2/10^6$ Btu Solid fossil 6.17 lb $SO_2/10^6$ Btu	Fossil fuel > 250×10^6 Btu/h 0.1 lb/10^6 Btu (2-h avg) Carbonaceous fuel > 30×10^6 Btu/h 0.2 lb/10^6 Btu Applies to non-attainment areas	3 lb/3000 BLS	New 1 ppm or 0.03 lb/3000 lb/BLS Existing 17.5 ppm or 0.05 lb/3000 lb BLS
Georgia		New 20% (1) Existing 40% (2)		Liquid fossil < 100×10^6 Btu/h 2.6% S > 100×10^6 Btu/h 3.0% S	New < 10×10^6 Btu/h 0.5 lb/10^6 Btu/h 10-250 $\times 10^6$ Btu/h		Rec. furn. Old - 20 ppm (8% O_2) New - 5 ppm Cross 25 ppm

(continued)

TABLE A-1 (continued)

State	Particulate general process - regulations[1]	Visible emission[2]	SO_2--general process	SO_2--fuel burning[3]	Particulate--fuel burning[3]	Particulate--kraft pulp mills[4]	Total reduced sulfur--kraft pulp mills[4]
Georgia (cont.)				Solid fossil < 100 x 10^6 Btu/h 2.5% S > 100 x 10^6 Btu/h 3.0% S Existing < 10 x 10^6 Btu/h 0.07 lb/10^6 Btu/h 10-2000 x 10^6 Btu/h $E = 0.7 (\frac{10}{Q})^{0.202}$ > 2000 x 10^6 Btu/h 0.24 lb/10^6 Btu	$E = 0.5 (\frac{10}{Q})^{0.5}$ > 250 x 10^6 Btu/h 0.10 lb/10^6 Btu		Smelt tank 0.0168 lb TRS/ton BLS Lime kiln 40 ppm (10% O_2)
Idaho	$E = 4.10P^{0.67}$ $P \leq 60{,}000$ lb/h $E = 55.0P^{0.11} - 40$ $P > 60{,}000$ lb/h	New 20% (1) Existing 40% (2)	New 20% (1) Existing 40% (2)	Residual oil 1.75% S Distillate oil Grade 1--0.3% S Grade 2--0.5% S Coal 1.0% S	$Q \leq 10 \times 10^6$ Btu/h 0.6 lb/10^6 Btu/h $Q \geq 15{,}000 \times 10^6$ Btu/h 0.12 lb/10^6 Btu/h		

(continued)

TABLE A-1 (continued)

State	Particulate general process - regulations[1]	Visible emission[2]	SO_2--general process	SO_2--fuel burning[3]	Particulate--fuel burning[3]	Particulate--kraft pulp mills[4]	Total reduced sulfur--kraft pulp mills[4]
Kentucky	New $E = 3.59P^{0.62}$ $P \leq 60{,}000$ lb/h $E = 1731P^{0.16}$ $P \geq 60{,}000$ lb/h Existing $E = 55.0P^{-0.11}$ 40 0.02 gr/ft^3 97% efficiency	New--20% 40% 2-minute in any 1 h Existing 40%		County Class I Liquid fuel $Y=7.7223X^{-0.4106}$ Solid fuel $Y=13.8781X^{-0.4434}$ County Class II Liquid fuel $Y=9.4644X^{-0.3740}$ Solid fuel $Y=14.1967X^{-0.3740}$ County Class III Liquid fuel $Y=8.060X^{-0.2436}$ Solid fuel $Y=12.2539X^{-0.2432}$ County Class IV Liquid fuel $Y=7.3639X^{-0.1347}$ Solid fuel $Y=10.8875X^{-0.1338}$ County Class V Liquid fuel $Y=8.0189X^{-0.1260}$	Priority I $E=0.9634Q^{-0.2356}$ Priority II $Y=1.2825X^{-0.2330}$ Priority III $Y=1.3152X^{-0.2159}$	Rec. furn. 3.5 lb/ton Lime kiln 1.0 lb/ton Smelt tank 0.5 lb/ton	Rec. furn. 15 ppm arith. avg 40 ppm for more than 60 min. in any 24h Thermal oxidation 98% efficiency

(continued)

TABLE A-1 (continued)

State	Particulate general process - regulations[1]	Visible emission[2]	SO_2--general process	SO_2--fuel burning[3]	Particulate--fuel burning[3]	Particulate--kraft pulp mills[4]	Total reduced sulfur--kraft pulp mills[4]
Kentucky (cont.)				Solid fuel $Y=12.0284X^{-0.1260}$ New Liquid 0.8 lb/10^6 Btu (2h avg.) Solid 1.2 lb/10^6 Btu (2h avg.) Existing Priority I Same as new Priority II Liquid 1.5 lb/10^6 Btu Solid 2.0 lb/10^6 Btu Priority III Liquid 2.0 lb/10^6 Btu Solid 3.5 lb/10^6 Btu			

(continued)

TABLE A-1 (continued)

State	Particulate general process - regulations[1]	Visible emission[2]	SO_2--general process	SO_2--fuel burning[3]	Particulate--fuel burning[3]	Particulate--kraft pulp mills[4]	Total reduced sulfur--kraft pulp mills[4]
Louisiana	$E = 4.10P^{0.67}$ $P \leq 60{,}000$ lb/h $E = 55.0P^{0.11} - 40$ $P > 60{,}000$ lb/h	20% (1)	2000 ppm	2000 ppm	0.6 lb/10^6 Btu	Rec. furn. 4 lb/TADP Smelt tank 0.5 lb/TADP Lime kiln 1.0 lb/TADP	
Maine	$E = 3.59P^{0.62}$ $P \leq 60{,}000$ lb/h $E = 17.31P^{0.16}$ $P > 60{,}000$ lb/h	40% (2)		Area 1 - 6 2.5% S Area 7 after 11/1/75 1.5% S after 11/1/85 1.0% S	3-10 x 10^6 Btu/h 0.6 lb/10^6 Btu $\geq 150 \times 10^6$ Btu/h 0.3 lb/10^6 Btu	Rec. furn. 4 lb/TADP Smelt tank 0.5 lb/TADP Lime kiln 1.0 lb/TADP	
Maryland	New 0.05 gr/SCFD Existing $E = 55.0P^{0.11} - 40$ $P \leq 60{,}000$ lb/h 0.05 gr/SCFD	20% (1)	New 500 ppm Existing 2000 ppm	$\geq 13 \times 10^6$ Btu/h Residual oil 2.0% S Distillate oil Process gas 0.3% S	New $13 \leq Q \leq 25 \times 10^6$ Btu $25 < Q \leq 250 \times 10^6$ Btu/h		0.6 lb/TODP[6]

(continued)

TABLE A-1 (continued)

State	Particulate general process - regulations[1]	Visible emission[2]	SO_2--general process	SO_2--fuel burning[3]	Particulate--fuel burning[3]	Particulate--kraft pulp mills[4]	Total reduced sulfur--kraft pulp mills[4]
Maryland (cont.)	P > 60,000 lb/h			≥ 13 unit actual and ≥ 100 plant design capacity Solid fuel 3.5 lb SO_2/10^6 Btu	E = log 10 $[6.597538Q^{-0.3}]$ > 250 x 10^6 Btu/h 6.1 x 10^6 Btu/h Existing ≤ 10 x 10^6 Btu/h 0.6 lb/10^6 Btu/h > 10 x 10^6 Btu/h $E = 1.025985Q^{-0.23297}$		
Michigan	$E = 4.10P^{0.67}$ P ≤ 60,000 lb/h $E = 55.0P^{0.11}-40$ P > 60,000 lb/h	(2)		≤ 500,000 lb steam/h coal 1.5% S, 2.4 lb SO_2/10^6 Btu oil 1.5% S, 1.7 lb/10^6 Btu > 500,000 lb steam/h coal 1.0% S, 1.6 lb/10^6 Btu oil 1.0% S 1.1 lb/10^6 Btu	Pulverized coal ≤ 100 x 10^3 lb steam/h 0.3 lb/1000 lb gas Other 0-100 0.65 lb/1000 lb gas 100-300 0.64-0.45 lb/1000 lb gas		

(continued)

TABLE A-1 (continued)

State	Particulate general process - regulations[1]	Visible emission[2]	SO_2--general process	SO_2--fuel burning[3]	Particulate--fuel burning[3]	Particulate--kraft pulp mills[4]	Total reduced sulfur--kraft pulp mills[4]
Minnesota	$E = 4.10P^{0.67}$ $P \leq 60{,}000$ lb/h $E = 55.0P^{0.11} - 40$ $P > 60{,}000$ lb/h	New 20% (1) Existing 60% (3)		New $< 250 \times 10^6$ Btu/h Liquid 2.0 lb/10^6 Btu Solid 4.0 lb/10^6 Btu $> 250 \times 10^6$ Btu/h Liquid 0.8 lb/10^6 Btu Solid 1.2 lb/10^6 Btu Existing $< 250 \times 10^6$ Btu/h Liquid 2.0 lb/10^6 Btu Solid 4.0 lb/10^6 Btu $> 250 \times 10^6$ Btu/h Liquid 1.6 lb/10^6 Btu Solid 3.0 lb/10^6 Btu	New 0.4 lb/10^6 Btu Existing 0.6 lb/10^6 Btu		

(continued)

TABLE A-1 (continued)

State	Particulate general process - regulations[1]	Visible emission[2]	SO_2--general process	SO_2--fuel burning[3]	Particulate--fuel burning[3]	Particulate--kraft pulp mills[4]	Total reduced sulfur--kraft pulp mills[4]
Mississippi	$E = 4.10P^{0.67}$	40% (2)	New 500 ppm Existing 2000 ppm	New Mod. units 2.4 lb $SO_2/10^6$ Btu Existing $\leq$ avg annual emission rate for 1970 units	$\leq 10 \times 10^6$ Btu/h 0.6 lb/10^6 Btu $\geq 115 \times 10^6$ Btu/h 0.1 lb/10^6 Btu	Rec. furn. 4 lb/TADP Smelt tank 0.5 lb/TADP Lime kiln 1.0 lb/TADP	
Montana	$E = 4.10P^{0.67}$ $P \leq 60{,}000$ lb/h $E = 55.0P^{0.11}-40$ $P > 60{,}000$ lb/h	New 20% Existing (2)	Concentrations shall not exceed 2 ppm at any time	1.0 lb/10^6 Btu	New $\leq 10 \times 10^6$ Btu/h 0.6 lb/10^6 Btu 100×10^6 Btu/h 0.35 lb/10^6 Btu 1000×10^6 Btu/h 0.2 lb/10^6 Btu $\geq 10{,}000 \times 10^6$ Btu/h 0.12 lb/10^6 Btu		Rec. furn. 0.087 lb/1000 lb BLS or 17.5 ppm

(continued)

TABLE A-1 (continued)

State	Particulate general process - regulations[1]	Visible emission[2]	SO_2--general process	SO_2--fuel burning[3]	Particulate--fuel burning[3]	Particulate--kraft pulp mills[4]	Total reduced sulfur--kraft pulp mills[4]
Pennsylvania (cont.)				> 250 x 10^6 Btu/h Inner--0.6% Outer--1.2% Fuel oil--Comm. No. 2 & lighter Inner--0.2% Outer--0.3% No. 4,5,6, and heavier Inner--0.5% Outer--1.0% Noncommercial Inner--0.6% Outer--1.2%			

(continued)

TABLE A-1 (continued)

State	Particulate general process - regulations[1]	Visible emission[2]	SO_2--general process	SO_2--fuel burning[3]	Particulate--fuel burning[3]	Particulate--kraft pulp mills[4]	Total reduced sulfur--kraft pulp mills[4]
Montana (cont.)					Existing $\leq 10 \times 10^6$ Btu/h 0.6 lb/10^6 Btu 100×10^6 Btu 0.4 lb/10^6 Btu 1000×10^6 Btu 0.28 lb/10^6 Btu $\geq 10{,}000 \times 10^6$ Btu 0.19 lb/10^6 Btu		
New Hampshire	New $E = 4.10P^{0.67}$ $P \leq 60{,}000$ lb/h $E = 55.0P^{0.11}-40$ $P > 60{,}000$ lb/h Existing $E = 5.05P^{0.67}$ $P \leq 60{,}000$ lb/h $E = 66.0P^{0.11}-48$ $P > 60{,}000$ lb/h	New 20% Existing $< 250 \times 10^6$ Btu 40% $> 250 \times 10^6$ Btu 20%		Solid 2.8 lbs S/10^6 Btu after 4/15/80 1.5 lbs/10^6 Btu Liquid #2 - 4% S #4 - 1% S #5 & #6 - 2% S	New $Q \leq 10 \times 10^6$ Btu/h 0.6 lb/10^6 Btu $10 < Q < 250 \times 10^6$ Btu/h $E=1.0286Q^{-0.2341}$ $Q \geq 250 \times 10^6$ Btu/h 0.1 lb/10^6 Btu	Rec. furn. 4 lb/TADP Smelt tank 0.5 lb/TADP Lime kiln 1.0 lb/TADP	2 lbs/TADP

(continued)

TABLE A-1 (continued)

State	Particulate general process - regulations[1]	Visible emission[2]	SO_2--general process	SO_2--fuel burning[3]	Particulate--fuel burning[3]	Particulate--kraft pulp mills[4]	Total reduced sulfur--kraft pulp mills[4]
New Hampshire (cont.)					Existing $Q \leq 10 \times 10^6$ Btu/h 0.6 lb/10^6 Btu $10 < 10{,}000 \times 10^6$ Btu/h $E=0.8803Q^{-0.1665}$ $Q \geq 10{,}000 \times 10^6$ Btu/h 0.19 lb/10^6 Btu		
New York	$E = 0.24P^{0.665}$ $P \leq 100{,}000$ lb/h $E = 39P^{0.082}-50$ $P > 100{,}000$ lb/h	20% (1)		By area New York City Fuel oil 0.2% to 1.0% Coal--0.2 to 0.6 lb/10^6 Btu Rest of State New $> 250 \times 10^6$ Btu/h Fuel oil--0.75% S Coal 0.6 lb S/10^6 Btu New and Existing $\leq 250 \times 10^6$ Btu/h Fuel oil--2% S Coal--2.5 lb/10^6 Btu S max or 1.9 lb/10^6 Btu S avg.	1-10 x 10^6 Btu/h 0.62 lb/10^6 Btu 10-10,000 x 10^6 Btu/h $E = 1.0Q^{-0.22}$ Coal installations $< 250 \times 10^6$ Btu/h Prior to 8/11/72 $E = 1.0Q^{-0.22}$ Coal and oil installations $> 250 \times 10^6$ Btu/h After 8/11/72 0.1 lb/10^6 Btu 50-250 x 10^6 Btu/h Oil--0.2 lb/10^6 Btu		

(continued)

TABLE A-1 (continued)

State	Particulate general process - regulations[1]	Visible emission[2]	SO_2--general process	SO_2--fuel burning[3]	Particulate--fuel burning[3]	Particulate--kraft pulp mills[4]	Total reduced sulfur--kraft pulp mills[4]
North Carolina	$E = 4.10P^{0.67}$ $P \leq 60{,}000$ lb/h $E = 55.0P^{0.11}-40$ $P \geq 60{,}000$ lb/h	New 20% (1) Existing 40% (2)		2.3 lb $SO_2/10^6$ Btu	Coal, oil $Q \leq 10 \times 10^6$ Btu/h 0.6 lb/10^6 Btu 10-10,000 Btu/h $E = 1.09Q^{-0.2594}$ $Q \geq 10{,}000$ Btu/h 0.1 lb/10^6 Btu Wood $Q \leq 10 \times 10^6$ Btu/h 0.7 lb/10^6 Btu $Q > 10 \times 10^6$ Btu/h $E = 1.1698Q^{-0.2230}$	Rec. furn. 3.0 lb/TADP Smelt tank 0.6 lb/TADP Lime kiln 0.5 lb/TADP	
Ohio	$E = 4.10P^{0.67}$ $P \leq 60{,}000$ lb/h $E = 55.0P^{0.11}-40$ $P > 60{,}000$ lb/h	20% (1)		Source specific	Priority I Region $Q \leq 10 \times 10^6$ Btu/h 0.6 lb/10^6 Btu $Q \geq 1000 \times 10^6$ Btu/h 0.1 lb/10^6 Btu Priority II & III $Q \leq 10 \times 10^6$ Btu/h 0.6 lb/10^6 Btu $Q \geq 1000 \times 10^6$ Btu/h 0.15 lb/10^6 Btu		

(continued)

TABLE A-1 (continued)

State	Particulate general process - regulations[1]	Visible emission[2]	SO_2-- general process	SO_2--fuel burning[3]	Particulate--fuel burning[3]	Particulate--kraft pulp mills[4]	Total reduced sulfur--kraft pulp mills[4]
Oklahoma	$E = 4.10P^{0.67}$ $P \leq 60{,}000$ lb/h $E = 55.0P^{0.11} - 40$ $P > 60{,}000$ lb/h	20%	Kraft pulp 18 lb/TADP		$\leq 10 \times 10^6$ Btu/h 0.6 lb/10^6 Btu 100×10^6 Btu/h 0.35 lb/10^6 Btu 1000×10^6 Btu/h 0.2 lb/10^6 Btu $\geq 10{,}000 \times 10^6$ Btu/h 0.1 lb/10^6 Btu/h Wood $\leq 10 \times 10^6$ Btu/h 0.60 lb/10^6 Btu $10\text{-}1000 \times 10^6$ Btu/h 0.5 lb/10^6 Btu 1000-10,000 0.35 lb/10^6 Btu $\geq 10{,}000 \times 10^6$ Btu/h 0.15 lb/10^6 Btu/h Combined wood/fossil $> 250 \times 10^6$ Btu 0.1 lb/10^6 Btu		

(continued)

TABLE A-1 (continued)

State	Particulate general process - regulations[1]	Visible emission[2]	SO_2--general process	SO_2--fuel burning[3]	Particulate--fuel burning[3]	Particulate--kraft pulp mills[4]	Total reduced sulfur--kraft pulp mills[4]
Oregon	P = 100 lb/h 0.46 lb/h P = 10,000 lb/h 10.0 lb/h P < 60,000 lb/h $E = 55.0P^{0.11}-40$	New 20% (1) Existing 40% (2)	1000 ppm	Residual oil 1.75% S Distillate Grade 1 0.3% Grade 2 0.5% Coal 1% S New $150 < Q \leq 250 \times 10^6$ Btu/h Liquid 1.4 lb/10^6 Btu Solid 1.6 lb/10^6 Btu $> 250 \times 10^6$ Btu/h Liquid 0.8 lb/10^6 Btu Solid 1.2 lb/10^6 Btu	New $\leq 10 \times 10^6$ Btu/h 0.27 lb/10^6 Btu $\geq 1000 \times 10^6$ Btu/h 0.05 lb/10^6 Btu Existing $\leq 10 \times 10^6$ Btu/h 0.55 lb/10^6 Btu $\geq 1000 \times 10^6$ Btu/h 0.27 lb/10^6 Btu	Rec. furn. 4 lb/TADP Smelt tank 0.5 lb/TADP Lime kiln 1 lb/TADP	0.5 lb/TADP or 17.5 ppm

(continued)

TABLE A-1 (continued)

State	Particulate general process - regulations[1]	Visible emission[2]	SO_2--general process	SO_2--fuel burning[3]	Particulate--fuel burning[3]	Particulate--kraft pulp mills[4]	Total reduced sulfur--kraft pulp mills[4]
Pennsylvania	0.04 gr/ft^3 or A = 6000 E E = 150,000 - 300,000 0.02 gr/ft^3 E > 300,000 ft^3	20% 3 minutes in any 1h 60% any time	500 ppm	3.0 lb/10^6 Btu < 50 A = 5.1E$^{0.14}$ 50 - 2000 1.8 lb/10^6 > 2000 Allegheny Co. 1.0 lb/10^6 Btu < 50 A = 1.7 E$^{0.14}$ 50 - 2000 .6 lb/10^6 Btu > 2000 SE Penn Air Basin < 250 x 10^6 Btu/h Inner--1.0% Outer--1.2%	< 50 x 10^6 Btu/h 0.4 lb/10^6 Btu 50-600 x 10^6 Btu/h A = 3.6E$^{-0.56}$ > 600 x 10^6 Btu/h 0.1 lb/10^6 Btu		

(continued)

TABLE A-1 (continued)

State	Particulate general process - regulations[1]	Visible emission[2]	SO_2--general process	SO_2--fuel burning[3]	Particulate--fuel burning[3]	Particulate--kraft pulp mills[4]	Total reduced sulfur--kraft pulp mills[4]
South Carolina	$E = 4.10P^{0.67}$ $P \leq 60{,}000$ lb/h $E = 55.0P^{0.11} - 40$ $P > 60{,}000$ lb/h	New 20% Existing 40%		Class I-- $\leq 10 \times 10^6$ Btu/h 3.5 lb/10^6 Btu $> 10 \times 10^6$ Btu/h 2.3 lb/10^6 Btu Class II-- $< 1000 \times 10^6$ Btu/h 3.5 lb/10^6 Btu/h $\geq 1000 \times 10^6$ Btu 2.3 lb/10^6 Btu Class III-- 3.5 lb/10^6 Btu	$Q < 1300 \times 10^6$ 0.6 lb/10^6 Btu $\geq 1300 \times 10^6$ Btu/h $E = 57.84Q^{-0.637}$ Except existing prior to 2/11/71 $Q < 10 \times 10^6$ Btu/h 0.8 lb/10^6 Btu	Rec. furn. 2.75 lb/TADP Smelt tank 1.0 lb/TADP Lime kiln 1.0 lb/TADP	Rec. furn. (8% O_2) old 20 ppm new 5 ppm cross 25 ppm Dig. system, evap. system, and stripper system 5 ppm Lime kiln 20 ppm (10% O_2) Smelt tank 0.0084 g/kg BLS
Tennessee	New $E = 3.59P^{0.62}$ $P \leq 60{,}000$ lb/h $E = 17.31P^{0.16}$ $P > 60{,}000$ lb/h Existing $E = 4.10P^{0.67}$	New 20% (1) Existing 40% (2) Wood $> 100 \times 10^6$ Btu/h 40%		$< 1000 \times 10^6$ Btu/h 1.6 - 5 lb/10^6 Btu $> 1000 \times 10^6$ Btu/h 1.2-5 lb/10^6 Btu	New $Q \leq 10 \times 10^6$ Btu/h 0 - 6 lb/10^6 Btu $10\text{-}250 \times 10^6$ Btu/h $E = 0.6(\frac{10}{Q})^{0.5566}$	Rec. furn. 3 lb/TADP Smelt tank 0.5 lb/TADP Lime kiln 1 lb/TADP	

(continued)

TABLE A-1 (continued)

State	Particulate general process - regulations[1]	Visible emission[2]	SO_2--general process	SO_2--fuel burning[3]	Particulate--fuel burning[3]	Particulate--kraft pulp mills[4]	Total reduced sulfur--kraft pulp mills[4]
Tennessee (cont.)	$P \leq 60{,}000$ lb/h $E = 55.0P^{0.11} - 40$ $P > 60{,}000$ lb/h				$\geq 250 \times 10^6$ Btu/h, 0.1 lb/10^6 Btu Wood New $Q \leq 25 \times 10^6$ Btu/h 0.33 gr/sdcf $Q \geq 100 \times 10^6$ Btu/h 0.20 gr/sdcf Existing $Q \leq 50 \times 10^6$ Btu/h 0.33 gr/sdcf $Q \geq 100 \times 10^6$ Btu/h 0.1 gr/sdcf		
Texas	$E = 3.12P^{0.985}$ $P \leq 40{,}000$ lb/h $E = 25.4P^{0.287}$ $P > 40{,}000$ lb/h	New 20% Existing 30%		Liquid 440 ppm SO_2 Solid 3.0 lb/10^6 Btu	$E = 0.048$ (stack flow rate acfm)$^{-0.62}$		

(continued)

TABLE A-1 (continued)

State	Particulate general process - regulations[1]	Visible emission[2]	SO_2--general process	SO_2--fuel burning[3]	Particulate--fuel burning[3]	Particulate--kraft pulp mills[4]	Total reduced sulfur--kraft pulp mills[4]
Virginia	$E = 4.10P^{0.67}$ $P \leq 60{,}000$ lb/h $E = 55.0P^{0.11} - 40$ $P > 60{,}000$ lb/h	20%		AQCR 1-6 2.64Q AQCR 7 Liquid or gas 1.06 Q Solid 1.52Q	$Q < 10 \times 10^6$ Btu/h 0.6 lb/10^6 Btu $10\text{-}10{,}000 \times 10^6$ Btu/h $E=1.096Q^{-0.2594}$ $\geq 10{,}000 \times 10^6$ Btu/h 0.1 lb/10^6 Btu AQCR 7 $< 100 \times 10^6$ Btu/h 0.3 lb/10^6 Btu $100\text{-}10{,}000 \times 10^6$ Btu/h $E = 0.9Q^{-0.2386}$ $\geq 10{,}000 \times 10^6$ Btu/h 0.1 lb/10^6 Btu	Rec. furn. 3 lb/TADP Smelt tank 0.75 lb/TADP Lime kiln 1 lb/TADP Slaker tank 0.3 lb/TADP	1.2 lb/TADP (daily avg./ quarter)
Washington	New 0.1 gr/sdcf Existing 0.2 gr/sdcf	35%	500 ppm	1000 ppm	New 0.1 gr/sdcf Existing 0.2 gr/sdcf	Rec. furn. 0.23 g/dcm (0.10 gr/dscf) Smelt tank 0.15 g/kg (0.30 lb/ton) of solids fired	Lime kiln Not exceed 8 ppm for two consecutive hours. Not exceed 50 ppm for a daily average. After 1/1/85 shall not exceed 20 ppm for a daily average.

(continued)

TABLE A-1 (continued)

State	Particulate general process - regulations[1]	Visible emission[2]	SO_2--general process	SO_2--fuel burning[3]	Particulate--fuel burning[3]	Particulate--kraft pulp mills[4]	Total reduced sulfur--kraft pulp mills[4]
Washington (cont.)						Lime kiln 0.30 g/dcm (0.13 gr/dscf) All other sources 0.23 g/dscm (0.10 gr/dscf) Fugitive emissions--reasonable precautions. Note: All mills are required to meet RACT	
Wisconsin	$E = 3.59P^{0.62}$ $P \leq 60{,}000$ lb/h $E = 17.31P^{0.16}$ $P > 60{,}000$ lb/h	New 20% Existing 40%		$> 250 \times 10^6$ Btu/h Liquid 0.8 lb/10^6 Btu Solid 1.2 lb/10^6 Btu	New $\leq 250 \times 10^6$ Btu/h 0.15 lb/10^6 Btu $> 250 \times 10^6$ Btu/h 0.10 lb/10^6 Btu Existing ASM APS-1 Max 0.6 lb/10^6 Btu		17.5 ppm Rec. furn.

Footnotes

1. E, allowable emissions in lb/h; P, process weight rate in tons/h.
2. ( ), Ringelmann number.
3. E, or Y allowable emissions in lb/h; Q, or X heat input in 10^6 Btu/h.
4. Rec. furn, recovery furnace; evap system, multi-effect evaporator system; dig system, digester system; TADP, ton air dried pulp; BLS, black liquor solid.
5. ppm expressed as H_2S on a dry gas basis.
6. TODP, ton oven-dried unbleached pulp.

APPENDIX B

EPA REFERENCE METHODS 1-5, 17

APPENDIX A—REFERENCE METHODS

The reference methods in this appendix are referred to in § 60.8 (Performance Tests) and § 60.11 (Compliance With Standards and Maintenance Requirements) of 40 CFR Part 60, Subpart A (General Provisions). Specific uses of these reference methods are described in the standards of performance contained in the subparts, beginning with Subpart D.

Within each standard of performance, a section titled "Test Methods and Procedures" is provided to (1) identify the test methods applicable to the facility subject to the respective standard and (2) identify any special instructions or conditions to be followed when applying a method to the respective facility. Such instructions (for example, establish sampling rates, volumes, or temperatures) are to be used either in addition to, or as a substitute for procedures in a reference method. Similarly, for sources subject to emission monitoring requirements, specific instructions pertaining to any use of a reference method are provided in the subpart or in Appendix B.

Inclusion of methods in this appendix is not intended as an endorsement or denial of their applicability to sources that are not subject to standards of performance. The methods are potentially applicable to other sources; however, applicability should be confirmed by careful and appropriate evaluation of the conditions prevalent at such sources.

The approach followed in the formulation of the reference methods involves specifications for equipment, procedures, and performance. In concept, a performance specification approach would be preferable in all methods because this allows the greatest flexibility to the user. In practice, however, this approach is impractical in most cases because performance specifications cannot be established. Most of the methods described herein, therefore, involve specific equipment specifications and procedures, and only a few methods in this appendix rely on performance criteria.

Minor changes in the reference methods should not necessarily affect the validity of the results and it is recognized that alternative and equivalent methods exist. Section 60.8 provides authority for the Administrator to specify or approve (1) equivalent methods, (2) alternative methods, and (3) minor changes in the methodology of the reference methods. It should be clearly un-

derstood that unless otherwise identified all such methods and changes must have prior approval of the Administrator. An owner employing such methods or deviations from the reference methods without obtaining prior approval does so at the risk of subsequent disapproval and retesting with approved methods.

Within the reference methods, certain specific equipment or procedures are recognized as being acceptable or potentially acceptable and are specifically identified in the methods. The items identified as acceptable options may be used without approval but must be identified in the test report. The potentially approvable options are cited as "subject to the approval of the Administrator" or as "or equivalent." Such potentially approvable techniques or alternatives may be used at the discretion of the owner without prior approval. However, detailed descriptions for applying these potentially approvable techniques or alternatives are not provided in the reference methods. Also, the potentially approvable options are not necessarily acceptable in all applications. Therefore, an owner electing to use such potentially approvable techniques or alternatives is responsible for: (1) assuring that the techniques or alternatives are in fact applicable and are properly executed; (2) including a written description of the alternative method in the test report (the written method must be clear and must be capable of being performed without additional instruction, and the the degree of detail should be similar to the detail contained in the reference methods); and (3) providing any rationale or supporting data necessary to show the validity of the alternative in the particular application. Failure to meet these requirements can result in the Administrator's disapproval of the alternative.

METHOD 1.—SAMPLE AND VELOCITY TRAVERSES FOR STATIONARY SOURCES

1. *Principle and Applicability*

1.1 Principle. To aid in the representative measurement of pollutant emissions and/or total volumetric flow rate from a stationary source, a measurement site where the effluent stream is flowing in a known direction is selected, and the cross-section of the stack is divided into a number of equal areas. A traverse point is then located within each of these equal areas.

1.2 Applicability. This method is applicable to flowing gas streams in ducts, stacks, and flues. The method cannot be used when: (1) flow is cyclonic or swirling (see Section 2.4), (2) a stack is smaller than about 0.30 meter (12 in.) in diameter, or 0.071 m^2 (113 $in.^2$) cross-sectional area, or (3) the measurement site is less than two stack or duct diameters downstream or less than a half diameter upstream from a flow disturbance.

The requirements of this method must be considered before construction of a new facility from which emissions will be measured; failure to do so may require subsequent alterations to the stack or deviation from the standard procedure. Cases involving variants are subject to approval by the Administrator, U.S. Environmental Protection Agency.

2. *Procedure*

2.1 Selection of Measurement Site. Sampling or velocity measurement is performed at a site located at least eight stack or duct diameters downstream and two diameters upstream from any flow disturbance such as a bend, expansion, or contraction in the stack, or from a visible flame. If necessary, an alternative location may be selected, at a position at least two stack or duct diameters downstream and a half diameter upstream from any flow disturbance. For a rectangular cross section, an equivalent diameter (D_e) shall be calculated from the following equation, to determine the upstream and downstream distances:

$$D_e = \frac{2LW}{(L+W)}$$

where L=length and W=width.

2.2 Determining the Number of Traverse Points.

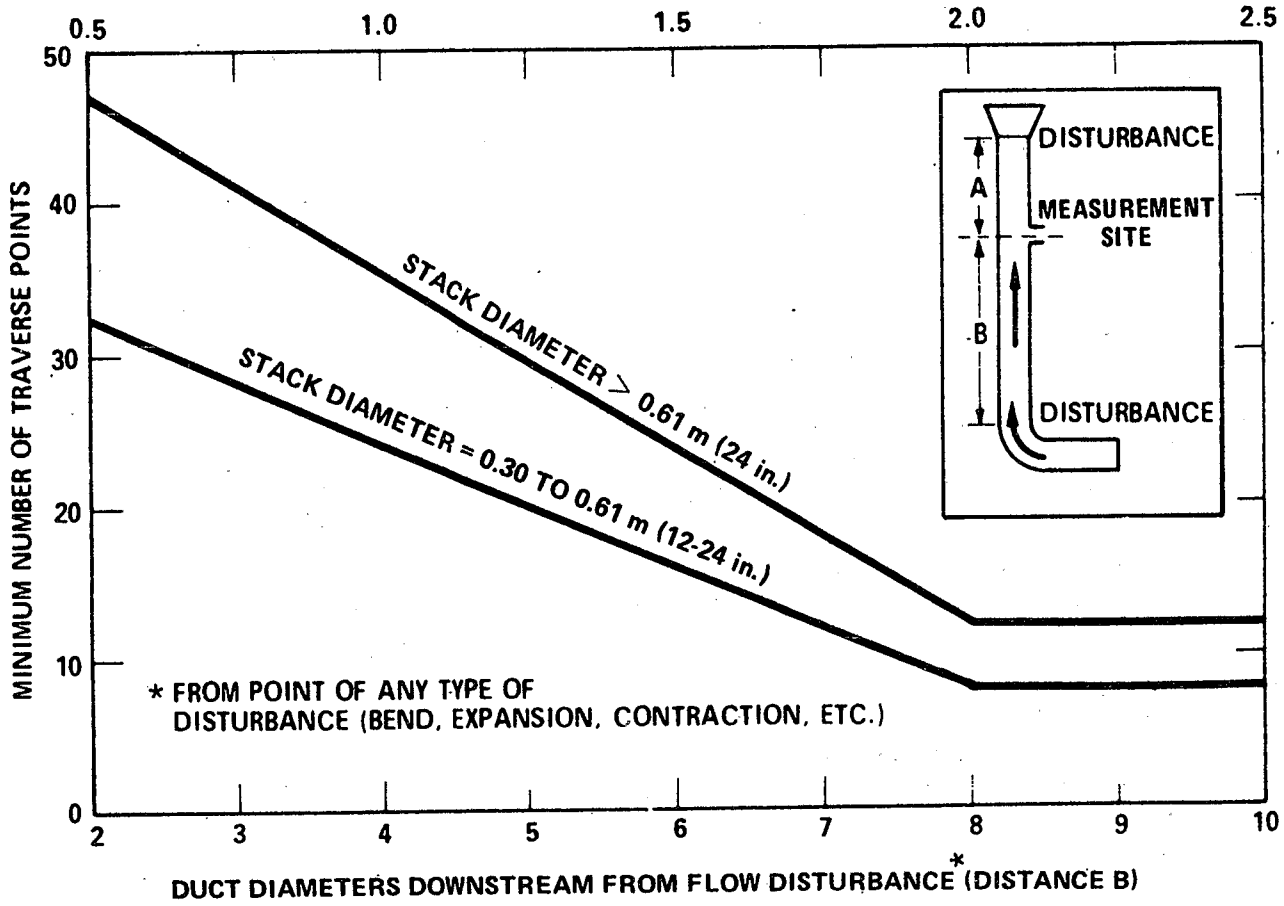
0.5
1.0
1.5
2.0
2.5
50
40
30
20
10
0
MINIMUM NUMBER OF TRAVERSE POINTS
STACK DIAMETER > 0.61 m (24 in.)
STACK DIAMETER = 0.30 TO 0.61 m (12-24 in.)
* FROM POINT OF ANY TYPE OF
DISTURBANCE (BEND, EXPANSION, CONTRACTION, ETC.)
DISTURBANCE
A
MEASUREMENT
SITE
B
DISTURBANCE
2
3
4
5
6
7
8
9
10
DUCT DIAMETERS DOWNSTREAM FROM FLOW DISTURBANCE* (DISTANCE B)

2.2.1 Particulate Traverses. When the eight- and two-diameter criterion can be met, the minimum number of traverse points shall be: (1) twelve, for circular or rectangular stacks with diameters (or equivalent diameters) greater than 0.61 meter (24 in.); (2) eight, for circular stacks with diameters between 0.30 and 0.61 meter (12-24 in.); (3) nine, for rectangular stacks with equivalent diameters between 0.30 and 0.61 meter (12-24 in.).

When the eight- and two-diameter criterion cannot be met, the minimum number of traverse points is determined from Figure 1-1. Before referring to the figure, however, determine the distances from the chosen measurement site to the nearest upstream and downstream disturbances, and divide each distance by the stack diameter or equivalent diameter, to determine the distance in terms of the number of duct diameters. Then, determine from Figure 1-1 the minimum number of traverse points that corresponds: (1) to the number of duct diameters upstream; and (2) to the number of diameters downstream. Select the higher of the two minimum numbers of traverse points, or a greater value, so that for circular stacks the number is a multiple of 4, and for rectangular stacks, the number is one of those shown in Table 1-1.

TABLE 1-1. CROSS-SECTION LAYOUT FOR RECTANGULAR STACKS

Number of traverse points	Matrix layout
9	3x3
12	4x3
16	4x4
20	5x4
25	5x5
30	6x5
36	6x6
42	7x6
49	7x7

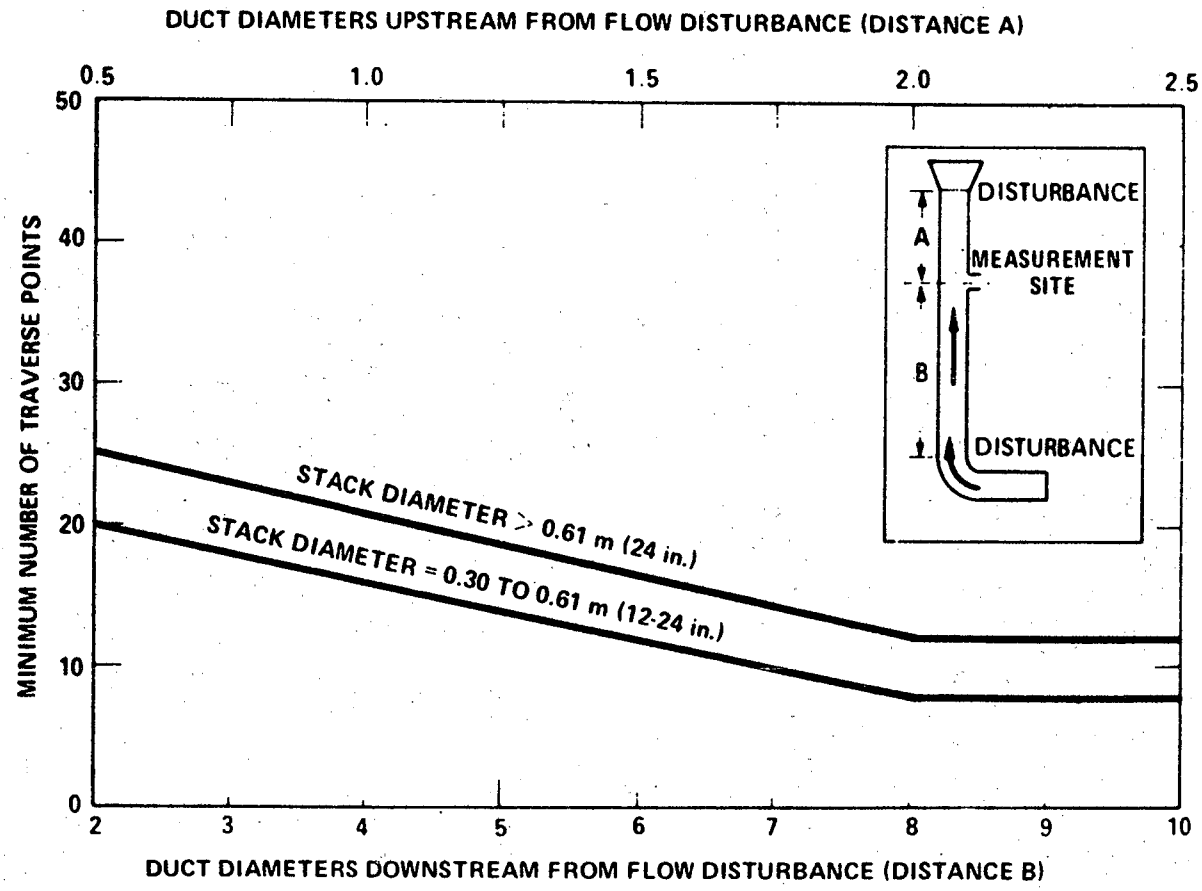

Figure 1-2. Minimum number of traverse points for velocity (nonparticulate) traverses.

2.2.2 Velocity (Non-Particulate) Traverses. When velocity or volumetric flow rate is to be determined (but not particulate matter), the same procedure as that for particulate traverses (Section 2.2.1) is followed, except that Figure 1-2 may be used instead of Figure 1-1.

2.3 Cross-sectional Layout and Location of Traverse Points.

2.3.1 Circular Stacks. Locate the traverse points on two perpendicular diameters according to Table 1-2 and the example shown in Figure 1-3. Any equation (for examples, see Citations 2 and 3 in the Bibliography) that gives the same values as those in Table 1-2 may be used in lieu of Table 1-2.

For particulate traverses, one of the diameters must be in a plane containing the greatest expected concentration variation, e.g., after bends, one diameter shall be in the plane of the bend. This requirement becomes less critical as the distance from the disturbance increases; therefore, other diameter locations may be used, subject to approval of the Administrator.

In addition for stacks having diameters greater than 0.61 m (24 in.) no traverse points shall be located within 2.5 centimeters (1.00 in.) of the stack walls; and for stack diameters equal to or less than 0.61 m (24 in.), no traverse points shall be located within 1.3 cm (0.50 in.) of the stack walls. To meet these criteria, observe the procedures given below.

2.3.1.1 Stacks With Diameters Greater Than 0.61 m (24 in.). When any of the traverse points as located in Section 2.3.1 fall within 2.5 cm (1.00 in.) of the stack walls, relocate them away from the stack walls to: (1) a distance of 2.5 cm (1.00 in.); or (2) a distance equal to the nozzle inside diameter, whichever is larger. These relocated traverse points (on each end of a diameter) shall be the "adjusted" traverse points.

Whenever two successive traverse points are combined to form a single adjusted traverse point, treat the adjusted point as two separate traverse points, both in the sampling (or velocity measurement) procedure, and in recording the data.

TRAVERSE POINT	DISTANCE, % of diameter
1	4.4
2	14.7
3	29.5
4	70.5
5	85.3
6	95.6

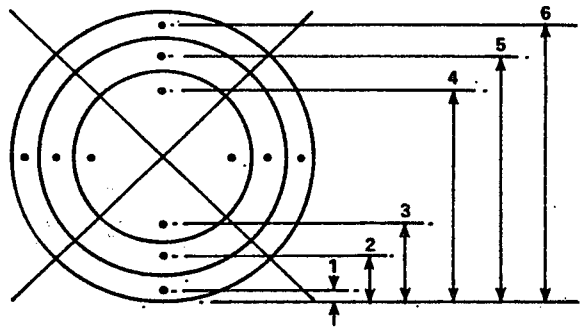

Figure 1-3. Example showing circular stack cross section divided into 12 equal areas, with location of traverse points indicated.

TABLE 1-2. LOCATION OF TRAVERSE POINTS IN CIRCULAR STACKS

[Percent of stack diameter from inside wall to traverse point]

Traverse point number on a diameter	Number of traverse points on a diameter—											
	2	4	6	8	10	12	14	16	18	20	22	24
1	14.6	6.7	4.4	3.2	2.6	2.1	1.8	1.6	1.4	1.3	1.1	1.1
2	85.4	25.0	14.6	10.5	8.2	6.7	5.7	4.9	4.4	3.9	3.5	3.2
3	.....	75.0	29.6	19.4	14.6	11.8	9.9	8.5	7.5	6.7	6.0	5.5
4	.....	93.3	70.4	32.3	22.6	17.7	14.6	12.5	10.9	9.7	8.7	7.9
5	.....	.....	85.4	67.7	34.2	25.0	20.1	16.9	14.6	12.9	11.6	10.5
6	.....	.....	95.6	80.6	65.8	35.6	26.9	22.0	18.8	16.5	14.6	13.2
7	.....	.....	.....	89.5	77.4	64.4	36.6	28.3	23.6	20.4	18.0	16.1

TABLE 1-2. LOCATION OF TRAVERSE POINTS IN CIRCULAR STACKS—Continued

[Percent of stack diameter from inside wall to traverse point]

Traverse point number on a diameter	Number of traverse points on a diameter—											
	2	4	6	8	10	12	14	16	18	20	22	24
8				96.8	85.4	75.0	63.4	37.5	29.6	25.0	21.8	19.4
9					91.8	82.3	73.1	62.5	38.2	30.6	26.2	23.0
10					97.4	88.2	79.9	71.7	61.8	38.8	31.5	27.2
11						93.3	85.4	78.0	70.4	61.2	39.3	32.3
12						97.9	90.1	83.1	76.4	69.4	60.7	39.8
13							94.3	87.5	81.2	75.0	68.5	60.2
14							98.2	91.5	85.4	79.6	73.8	67.7
15								95.1	89.1	83.5	78.2	72.8
16								98.4	92.5	87.1	82.0	77.0
17									95.6	90.3	85.4	80.6
18									98.6	93.3	88.4	83.9
19										96.1	91.3	86.8
20										98.7	94.0	89.5
21											96.5	92.1
22											98.9	94.5
23												96.8
24												98.9

2.3.1.2 Stacks With Diameters Equal to or Less Than 0.61 m (24 in.). Follow the procedure in Section 2.3.1.1, noting only that any "adjusted" points should be relocated away from the stack walls to: (1) a distance of 1.3 cm (0.50 in.); or (2) a distance equal to the nozzle inside diameter, whichever is larger.

2.3.2 Rectangular Stacks. Determine the number of traverse points as explained in Sections 2.1 and 2.2 of this method. From Table 1-1, determine the grid configuration. Divide the stack cross-section into as many equal rectangular elemental areas as traverse points, and then locate a traverse point at the centroid of each equal area according to the example in Figure 1-4.

If the tester desires to use more than the minimum number of traverse points, expand the "minimum number of traverse points" matrix (see Table 1-1) by adding the extra traverse points along one or the other or both legs of the matrix; the final matrix need not be balanced. For example, if a 4x3 "minimum number of points; matrix were expanded to 36 points, the final matrix could be 9x4 or 12x3, and would not necessarily have to be 6x6. After constructing the final matrix, divide the stack cross-section into as many equal rectangular, elemental areas as traverse points, and locate a traverse point at the centroid of each equal area.

The situation of traverse points being too close to the stack walls is not expected to arise with rectangular stacks. If this problem should ever arise, the Administrator must be contacted for resolution of the matter.

2.4 Verification of Absence of Cyclonic Flow. In most stationary sources, the direction of stack gas flow is essentially parallel to the stack walls. However, cyclonic flow may exist (1) after such devices as cyclones and inertial demisters following venturi scrubbers, or (2) in stacks having tangential inlets or other duct configurations which tend to induce swirling; in these instances, the presence or absence of cyclonic flow at the sampling location must be determined. The following techniques are acceptable for this determination.

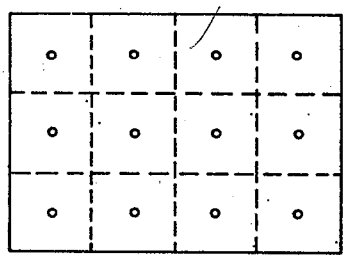

Figure 1-4. Example showing rectangular stack cross section divided into 12 equal areas, with a traverse point at centroid of each area.

Level and zero the manometer. Connect a Type S pitot tube to the manometer. Position the Type S pitot tube at each traverse point, in succession, so that the planes of the face openings of the pitot tube are perpendicular to the stack cross-sectional plane; when the Type S pitot tube is in this position, it is at "0° reference." Note the differential pressure (Δp) reading at each traverse point. If a null (zero) pitot reading is obtained at 0° reference at a given traverse

point, an acceptable flow condition exists at that point. If the pitot reading is not zero at 0° reference, rotate the pitot tube (up to ±90° yaw angle), until a null reading is obtained. Carefully determine and record the value of the rotation angle (α) to the nearest degree. After the null technique has been applied at each traverse point, calculate the average of the absolute values of α; assign α values of 0° to those points for which no rotation was required, and include these in the overall average. If the average value of α is greater than 10°, the overall flow condition in the stack is unacceptable and alternative methodology, subject to the approval of the Administrator, must be used to perform accurate sample and velocity traverses.

3. *Bibliography*

1. Determining Dust Concentration in a Gas Stream, ASME. Performance Test Code No. 27. New York, 1957.

2. Devorkin, Howard, et al. Air Pollution Source Testing Manual. Air Pollution Control District. Los Angeles, CA. November 1963.

3. Methods for Determination of Velocity, Volume, Dust and Mist Content of Gases. Western Precipitation Division of Joy Manufacturing Co. Los Angeles, CA. Bulletin WP-50. 1968.

4. Standard Method for Sampling Stacks for Particulate Matter. In: 1971 Book of ASTM Standards, Part 23. ASTM Designation D-2928-71. Philadelphia, Pa. 1971.

5. Hanson, H. A., et al. Particulate Sampling Strategies for Large Power Plants Including Nonuniform Flow. USEPA, ORD, ESRL, Research Triangle Park, N.C. EPA-600/2-76-170, June 1976.

6. Entropy Environmentalists, Inc. Determination of the Optimum Number of Sampling Points: An Analysis of Method 1 Criteria. Environmental Protection Agency, Research Triangle Park, N.C. EPA Contract No. 68-01-3172, Task 7.

METHOD 2—DETERMINATION OF STACK GAS VELOCITY AND VOLUMETRIC FLOW RATE (TYPE S PITOT TUBE)

1. *Principle and Applicability*

1.1 Principle. The average gas velocity in a stack is determined from the gas density and from measurement of the average velocity head with a Type S (Stausscheibe or reverse type) pitot tube.

1.2 Applicability. This method is applicable for measurement of the average velocity of a gas stream and for quantifying gas flow.

This procedure is not applicable at measurement sites which fail to meet the criteria of Method 1, Section 2.1. Also, the method cannot be used for direct measurement in cyclonic or swirling gas streams; Section 2.4 of Method 1 shows how to determine cyclonic or swirling flow conditions. When unacceptable conditions exist, alternative procedures, subject to the approval of the Administrator, U.S. Environmental Protection Agency, must be employed to make accurate flow rate determinations; examples of such alternative procedures are: (1) to install straightening vanes; (2) to calculate the total volumetric flow rate stoichiometrically, or (3) to move to another measurement site at which the flow is acceptable.

2. *Apparatus*

Specifications for the apparatus are given below. Any other apparatus that has been demonstrated (subject to approval of the Administrator) to be capable of meeting the specifications will be considered acceptable.

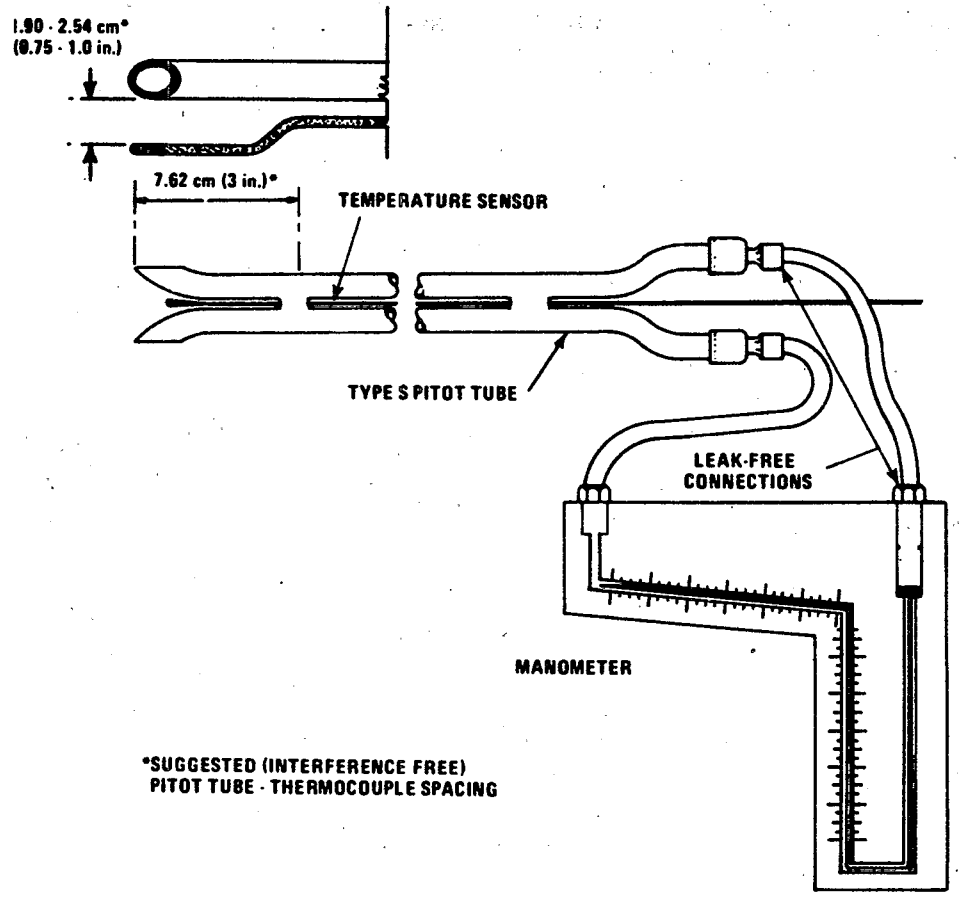

Figure 2-1. Type S pitot tube manometer assembly.

2.1 Type S Pitot Tube. The Type S pitot tube (Figure 2-1) shall be made of metal tubing (e.g. stainless steel). It is recommended that the external tubing diameter (dimension D_t Figure 2-2b) be between 0.48 and 0.95 centimeters (3/16 and 3/8 inch). There shall be an equal distance from the base of each leg of the pitot tube to its face-opening plane (dimensions P_A and P_B Figure 2-2b); it is recommended that this distance be between 1.05 and 1.50 times the external tubing diameter. The face openings of the pitot tube shall, preferably, be aligned as shown in Figure 2-2; however, slight misalignments of the openings are permissible (see Figure 2-3).

The Type S pitot tube shall have a known coefficient, determined as outlined in Section 4. an identification number shall be assigned to the pitot tube; this number shall be permanently marked or engraved on the body of the tube.

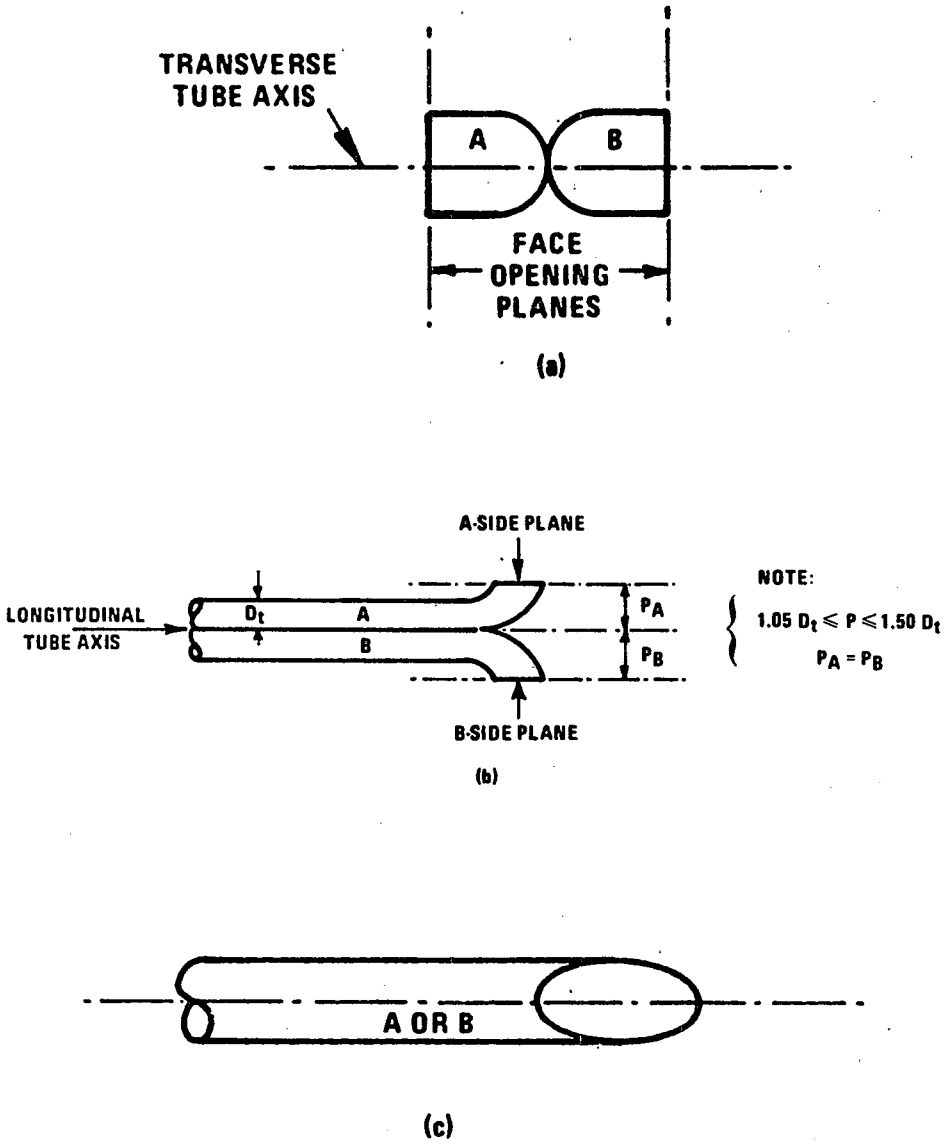

Figure 2-2. Properly constructed Type S pitot tube, shown in: (a) end view; face opening planes perpendicular to transverse axis; (b) top view; face opening planes parallel to longitudinal axis; (c) side view; both legs of equal length and centerlines coincident, when viewed from both sides. Baseline coefficient values of 0.84 may be assigned to pitot tubes constructed this way.

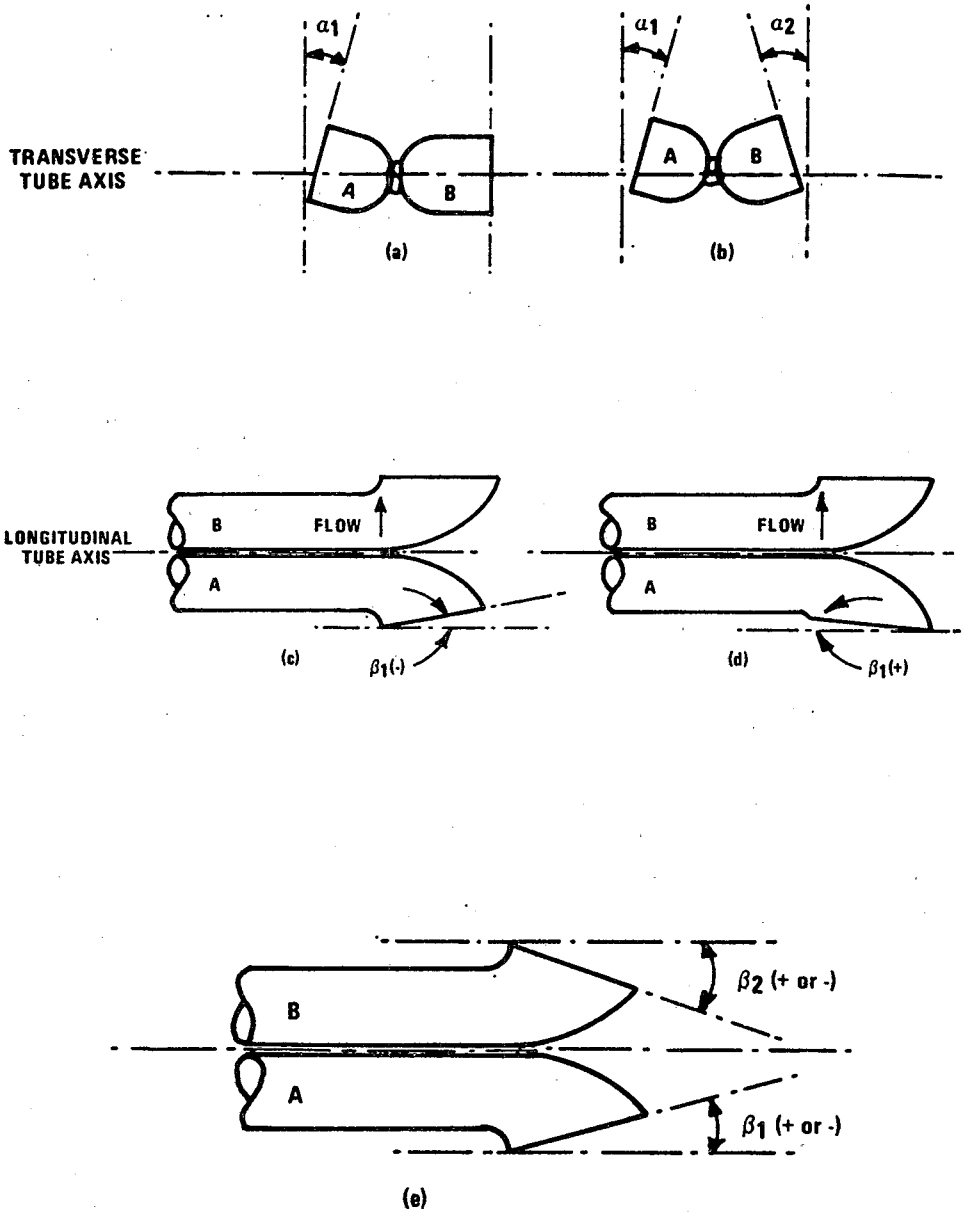
α1
α1
α2
TRANSVERSE TUBE AXIS
A
B
A
B
(a)
(b)
LONGITUDINAL TUBE AXIS
B
FLOW
A
B
FLOW
A
(c)
β1(-)
(d)
β1(+)
B
A
β2 (+ or -)
β1 (+ or -)
(e)

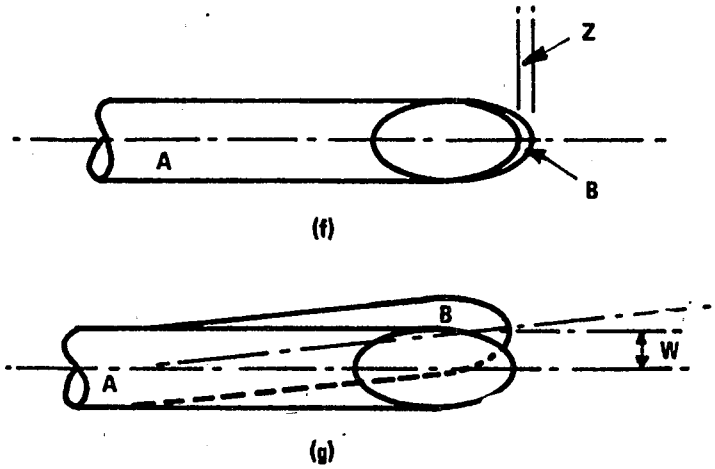

Figure 2-3. Types of face-opening misalignment that can result from field use or improper construction of Type S pitot tubes. These will not affect the baseline value of Cp(s) so long as $\alpha 1$ and $\alpha 2$ 10°, $\beta 1$ and $\beta 2$ 5°, z 0.32 cm (1/8 in.) and w 0.08 cm (1/32 in.) (citation 11 in Section 6).

A standard pitot tube may be used instead of a Type S, provided that it meets the specifications of Sections 2.7 and 4.2; note, however, that the static and impact pressure holes of standard pitot tubes are susceptible to plugging in particulate-laden gas streams. Therefore, whenever a standard pitot tube is used to perform a traverse, adequate proof must be furnished that the openings of the pitot tube have not plugged up during the traverse period; this can be done by taking a velocity head (Δp) reading at the final traverse point, cleaning out the impact and static holes of the standard pitot tube by "back-purging" with pressurized air, and then taking another Δp reading. If the Δp readings made before and after the air purge are the same (±5 percent), the traverse is acceptable. Otherwise, reject the run. Note that if Δp at the final traverse point is unsuitably low, another point may be selected. If "back-purging" at regular intervals is part of the procedure, then comparative Δp readings shall be taken, as above, for the last two back purges at which suitably high Δp readings are observed.

2.2 Differential Pressure Gauge. An inclined manometer or equivalent device is used. Most sampling trains are equipped with a 10-in. (water column) inclined-vertical manometer, having 0.01-in. H_2O divisions on the 0-to 1-in. inclined scale, and 0.1-in. H_2O divisions on the 1- to 10-in. vertical scale. This type of manometer (or other gauge of equivalent sensitivity) is satisfactory for the measurement of Δp values as low as 1.3 mm (0.05 in.) H_2O. However, a differential pressure gauge of greater sensitivity shall be used (subject to the approval of the Administrator), if any of the following is found to be true: (1) the arithmetic average of all Δp readings at the traverse points in the stack is less than 1.3 mm (0.05 in.) H_2O; (2) for traverses of 12 or more points, more than 10 percent of the individual Δp readings are below 1.3 mm (0.05 in.) H_2O; (3) for traverses of fewer than 12 points, more than one Δp reading is below 1.3 mm (0.05 in.) H_2O. Citation 18 in Section 6 describes commercially available instrumentation for the measurement of low-range gas velocities.

As an alternative to criteria (1) through (3) above, the following calculation may be performed to determine the necessity of using a more sensitive differential pressure gauge:

$$T=\frac{\sum_{i=1}^{n}\sqrt{\Delta p_i+K}}{\sum_{i=1}^{n}\sqrt{\Delta p_i}}$$

where:

Δp_i=Individual velocity head reading at a traverse point, mm H_2O (in. H_2O).

n=Total number of traverse points.

K=0.13 mm H_2O when metric units are used and 0.005 in H_2O when English units are used.

If T is greater than 1.05, the velocity head data are unacceptable and a more sensitive differential pressure gauge must be used.

NOTE: If differential pressure gauges other than inclined manometers are used (e.g., magnehelic gauges), their calibration must be checked after each test series. To check the calibration of a differential pressure gauge, compare Δp readings of the gauge with those of a gauge-oil manometer at a minimum of three points, approximately representing the range of Δp values in the stack. If, at each point, the values of Δp as read by the differential pressure gauge and gauge-oil manometer agree to within 5 percent, the differential pressure gauge shall be considered to be in proper calibration. Otherwise, the test series shall either be voided, or procedures to adjust the measured Δp values and final results shall be used subject to the approval of the Administrator.

2.3 Temperature Gauge. A thermocouple, liquid-filled bulb thermometer, bimetallic thermometer, mercury-in-glass thermometer, or other gauge, capable of measuring temperature to within 1.5 percent of the minimum absolute stack temperature shall be used. The temperature gauge shall be attached to the pitot tube such that the sensor tip does not touch any metal; the gauge shall be in an interference-free arrangement with respect to the pitot tube face openings (see Figure 2-1 and also Figure 2-7 in Section 4). Alternate positions may be used if the pitot tube-temperature gauge system is calibrated according to the procedure of Section 4. Provided that a difference of not more than 1 percent in the average velocity measurement is introduced, the temperature gauge need not be attached to the pitot tube; this alternative is subject to the approval of the Administrator.

2.4 Pressure Probe and Gauge. A piezometer tube and mercury- or water-filled U-tube manometer capable of measuring stack pressure to within 2.5 mm (0.1 in.) Hg is used. The static tap of a standard type pitot tube or one leg of a Type S pitot tube with the face opening planes positioned parallel to the gas flow may also be used as the pressure probe.

2.5 Barometer. A mercury, aneroid, or other barometer capable of measuring atmospheric pressure to within 2.5 mm Hg (0.1 in. Hg) may be used. In many cases, the barometric reading may be obtained from a nearby national weather service station, in which case the station value (which is the absolute barometric pressure) shall be requested and an adjustment for elevation differences between the weather station and the sampling point shall be applied at a rate of minus 2.5 mm (0.1 in.) Hg per 30-meter (100 foot) elevation increase or vice-versa for elevation decrease.

2.6 Gas Density Determination Equipment. Method 3 equipment, if needed (see Section 3.6), to determine the stack gas dry molecular weight, and Reference Method 4 or Method 5 equipment for moisture content determination; other methods may be used subject to approval of the Administrator.

2.7 Calibration Pilot Tube. When calibration of the Type S pitot tube is necessary (see Section 4), a standard pitot tube is used as a reference. The standard pitot tube shall, preferably, have a known coefficient, obtained either (1) directly from the National Bureau of Standards, Route 270, Quince Orchard Road, Gaithersburg, Maryland, or (2) by calibration against another standard pitot tube with an NBS-traceable coefficient. Alternatively, a standard pitot tube designed according to the criteria given in 2.7.1 through 2.7.5 below and illustrated in Figure 2-4 (see also Citations 7, 8, and 17 in Section 6) may be used. Pitot tubes designed according to these specifications will have baseline coefficients of about 0.99±0.01.

2.7.1 Hemispherical (shown in Figure 2-4), ellipsoidal, or conical tip.

2.7.2 A minimum of six diameters straight run (based upon D, the external diameter of the tube) between the tip and the static pressure holes.

2.7.3 A minimum of eight diameters straight run between the static pressure holes and the centerline of the external tube, following the 90 degree bend.

2.7.4 Static pressure holes of equal size (approximately 0.1 D), equally spaced in a piezometer ring configuration.

2.7.5 Ninety degree bend, with curved or mitered junction.

2.8 Differential Pressure Gauge for Type S Pitot Tube Calibration. An inclined manometer or equivalent is used. If the single-velocity calibration technique is employed (see Section 4.1.2.3), the calibration differential pressure gauge shall be readable to the nearest 0.13 mm H_2O (0.005 in. H_2O). For multivelocity calibrations, the gauge shall be readable to the nearest 0.13 mm H_2O (0.005 in H_2O) for Δp values between 1.3 and 25 mm H_2O (0.05 and 1.0 in. H_2O), and to the nearest 1.3 mm H_2O (0.05 in. H_2O) for Δp values above 25 mm H_2O (1.0 in. H_2O). A special, more sensitive gauge will be required to read Δp values below 1.3 mm H_2O [0.05 in. H_2O] (see Citation 18 in Section 6).

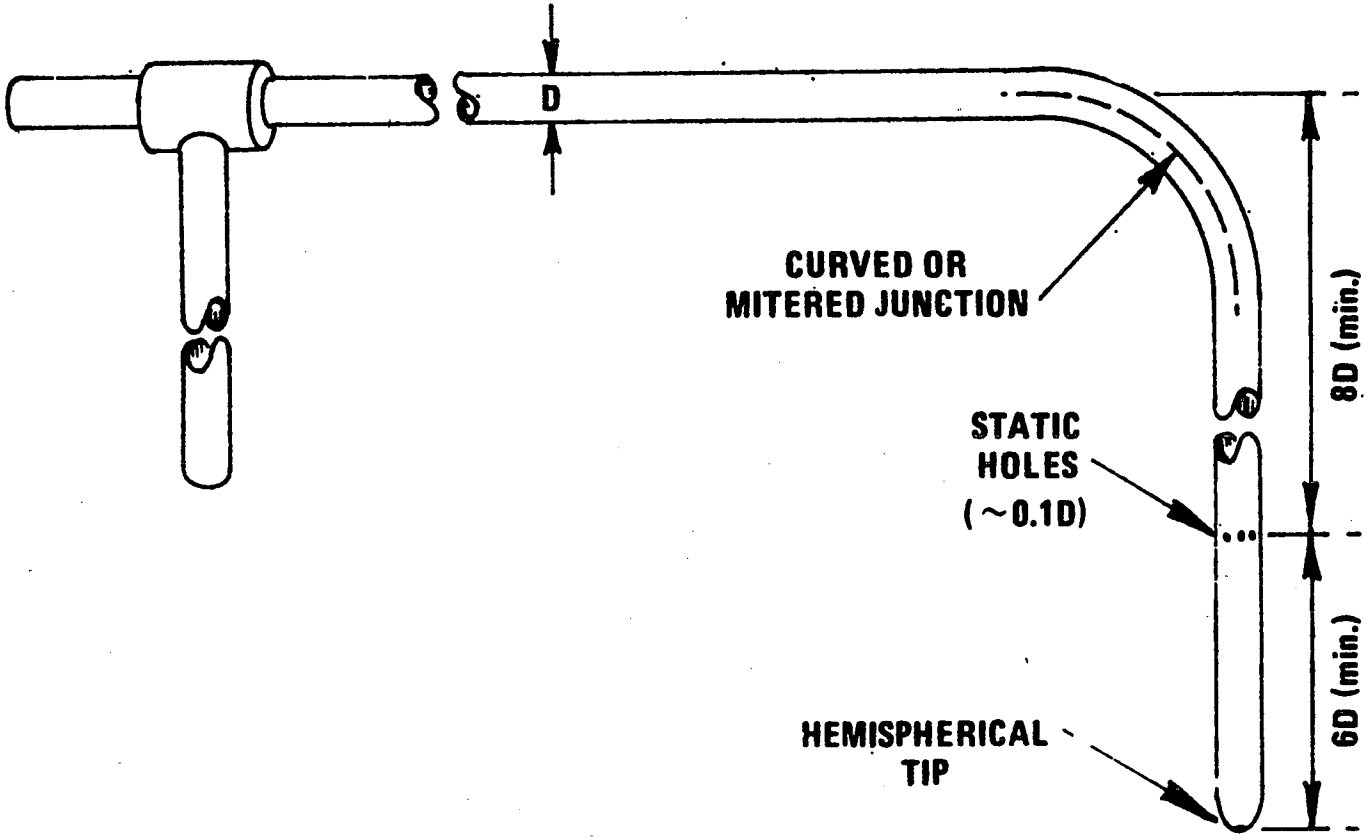

Figure 2-4. Standard pitot tube design specifications.

3. *Procedure*

3.1 Set up the apparatus as shown in Figure 2-1. Capillary tubing or surge tanks installed between the manometer and pitot tube may be used to dampen Δp fluctuations. It is recommended, but not required, that a pretest leak-check be conducted, as follows: (1) blow through the pitot impact opening until at least 7.6 cm (3 in.) H_2O velocity pressure registers on the manometer; then, close off the impact opening. The pressure shall remain stable for at least 15 seconds; (2) do the same for the static pressure side, except using suction to obtain the minimum of 7.6 cm (3 in.) H_2O. Other leak-check procedures, subject to the approval of the Administrator may be used.

3.2 Level and zero the manometer. Because the manometer level and zero may drift due to vibrations and temperature changes, make periodic checks during the traverse. Record all necessary data as shown in the example data sheet (Figure 2-5).

3.3 Measure the velocity head and temperature at the traverse points specified by Method 1. Ensure that the proper differential pressure gauge is being used for the range of Δp values encountered (see Section 2.2). If it is necessary to change to a more sensitive gauge, do so, and remeasure the Δp and temperature readings at each traverse point. Conduct a post-test leak-check (mandatory), as described in Section 3.1 above, to validate the traverse run.

3.4 Measure the static pressure in the stack. One reading is usually adequate.

3.5 Determine the atmospheric pressure.

PLANT _____

DATE _____ RUN NO. _____

STACK DIAMETER OR DIMENSIONS, m(in.) _____

BAROMETRIC PRESSURE, mm Hg (in. Hg) _____

CROSS SECTIONAL AREA, $m^2(ft^2)$ _____

OPERATORS _____

PITOT TUBE I.D. NO. _____

AVG. COEFFICIENT, C_p = _____

LAST DATE CALIBRATED _____

SCHEMATIC OF STACK CROSS SECTION

Traverse Pt. No.	Vel. Hd., Δp mm (in.) H_2O	Stack Temperature		P_g mm Hg (in.Hg)	$\sqrt{\Delta p}$
		t_s, °C (°F)	T_s, °K (°R)		
		Average			

Figure 2-5. Velocity traverse data.

3.6 Determine the stack gas dry molecular weight. For combustion processes or processes that emit essentially CO_2, O_2, CO, and N_2, use Method 3. For processes emitting essentially air, an analysis need not be conducted; use a dry molecular weight of 29.0. For other processes, other methods, subject to the approval of the Administrator, must be used.

3.7 Obtain the moisture content from Reference Method 4 (or equivalent) or from Method 5.

3.8 Determine the cross-sectional area of the stack or duct at the sampling location. Whenever possible, physically measure the stack dimensions rather than using blueprints.

4. *Calibration*

4.1 Type S Pitot Tube. Before its initial use, carefully examine the Type S pitot tube in top, side, and end views to verify that the face openings of the tube are aligned within the specifications illustrated in Figure 2-2 or 2-3. The pitot tube shall not be used if it fails to meet these alignment specifications.

After verifying the face opening alignment, measure and record the following dimensions of the pitot tube: (a) the external tubing diameter (dimension D_t, Figure 2-2b); and (b) the base-to-opening plane distances (dimensions P_A and P_B, Figure 2-2b). If D_t is between 0.48 and 0.95 cm (3/16 and 3/8 in.) and if P_A and P_B are equal and between 1.05 and 1.50 D_t, there are two possible options: (1) the pitot tube may be calibrated according to the procedure outlined in Sections 4.1.2 through 4.1.5 below, or (2) a baseline (isolated tube) coefficient value of 0.84 may be assigned to the pitot tube. Note, however, that if the pitot tube is part of an assembly, calibration may still be required, despite knowledge of the baseline coefficient value (see Section 4.1.1).

If D_t, P_A, and P_B are outside the specified limits, the pitot tube must be calibrated as outlined in 4.1.2 through 4.1.5 below.

4.1.1 Type S Pitot Tube Assemblies. During sample and velocity traverses, the isolated Type S pitot tube is not always used; in many instances, the pitot tube is used in combination with other source-sampling components (thermocouple, sampling probe, nozzle) as part of an "assembly." The presence of other sampling components can sometimes affect the baseline value of the Type S pitot tube coefficient (Citation 9 in Section 6); therefore an assigned (or otherwise known) baseline coefficient value may or may not be valid for a given assembly. The baseline and assembly coefficient values will be identical only when the relative placement of the components in the assembly is such that aerodynamic interference effects are eliminated. Figures 2-6 through 2-8 illustrate interference-free component arrangements for Type S pitot tubes having external tubing diameters between 0.48 and 0.95 cm (3/16 and 3/8 in.). Type S pitot tube assemblies that fail to meet any or all of the specifications of Figures 2-6 through 2-8 shall be calibrated according to the procedure outlined in Sections 4.1.2 through 4.1.5 below, and prior to calibration, the values of the intercomponent spacings (pitot-nozzle, pitot-thermocouple, pitot-probe sheath) shall be measured and recorded.

NOTE: Do not use any Type S pitot tube assembly which is constructed such that the impact pressure opening plane of the pitot tube is below the entry plane of the nozzle (see Figure 2-6b).

4.1.2 Calibration Setup. If the Type S pitot tube is to be calibrated, one leg of the tube shall be permanently marked A, and the other, B. Calibration shall be done in a flow system having the following essential design features:

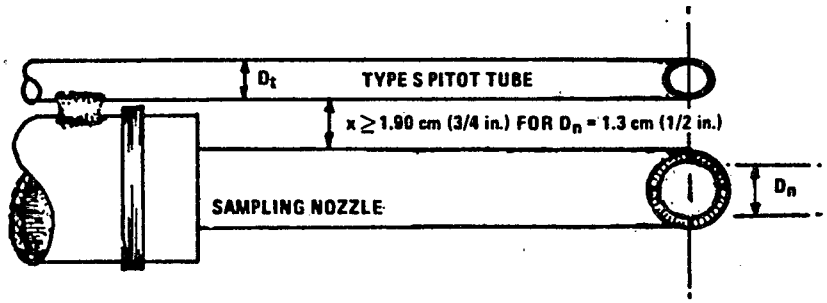

A. BOTTOM VIEW; SHOWING MINIMUM PITOT-NOZZLE SEPARATION.

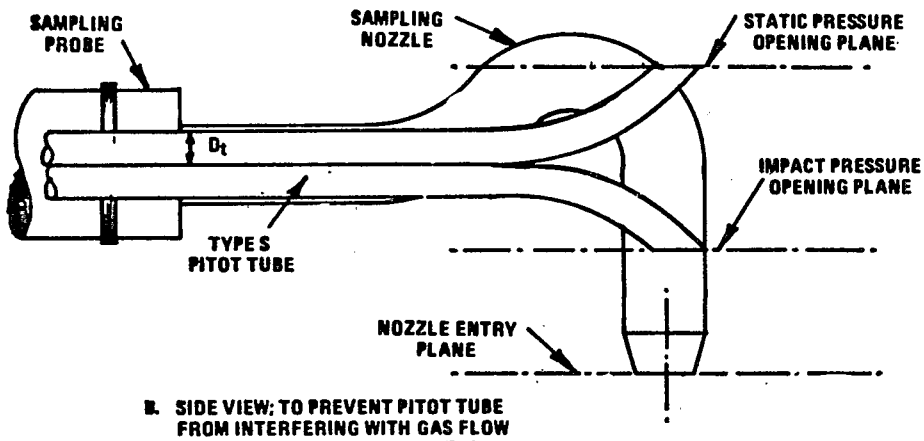

B. SIDE VIEW; TO PREVENT PITOT TUBE FROM INTERFERING WITH GAS FLOW STREAMLINES APPROACHING THE NOZZLE, THE IMPACT PRESSURE OPENING PLANE OF THE PITOT TUBE SHALL BE EVEN WITH OR ABOVE THE NOZZLE ENTRY PLANE.

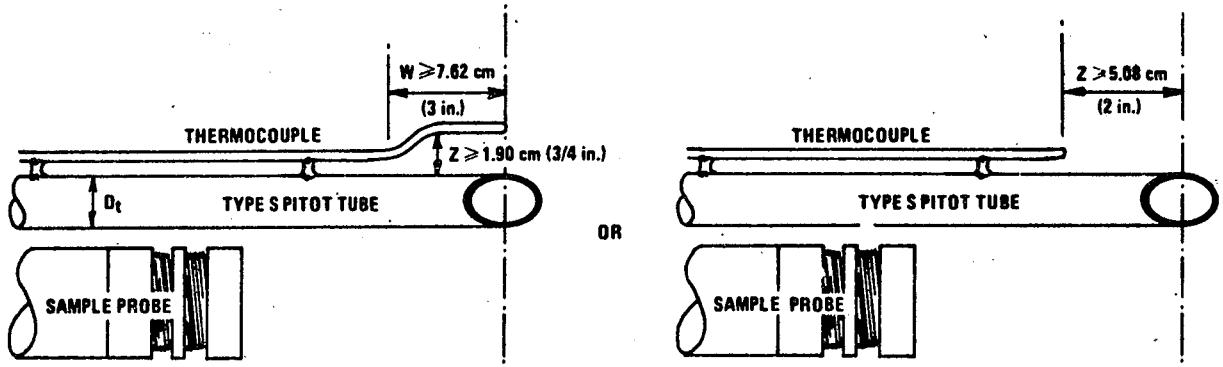

Figure 2-7. Proper thermocouple placement to prevent interference; D_t between 0.48 and 0.95 cm (3/16 and 3/8 in.).

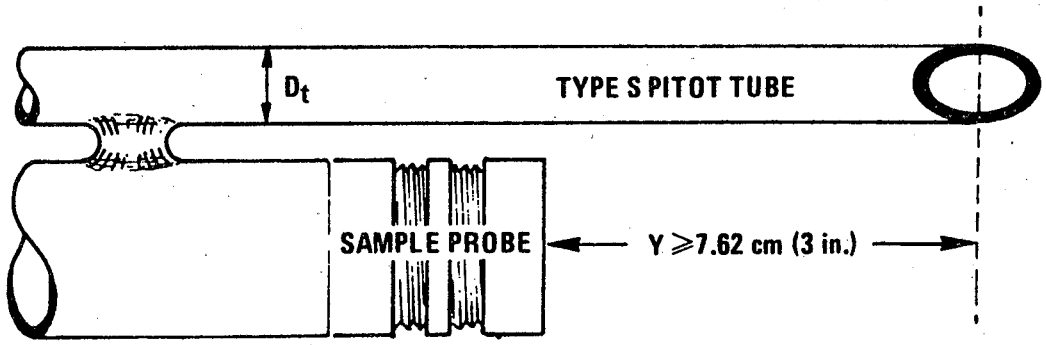

Figure 2-8. Minimum pitot-sample probe separation needed to prevent interference; D_t between 0.48 and 0.95 cm (3/16 and 3/8 in.).

4.1.2.1 The flowing gas stream must be confined to a duct of definite cross-sectional area, either circular or rectangular. For circular cross-sections, the minimum duct diameter shall be 30.5 cm (12 in.); for rectangular cross-sections, the width (shorter side) shall be at least 25.4 cm (10 in.).

4.1.2.2 The cross-sectional area of the calibration duct must be constant over a distance of 10 or more duct diameters. For a rectangular cross-section, use an equivalent diameter, calculated from the following equation, to determine the number of duct diameters:

$$D_e = \frac{2LW}{(L+W)}$$

Equation 2-1

where:
D_e=Equivalent diameter
L=Length
W=Width

To ensure the presence of stable, fully developed flow patterns at the calibration site, or "test section," the site must be located at least eight diameters downstream and two diameters upstream from the nearest disturbances.

NOTE: The eight- and two-diameter criteria are not absolute; other test section locations may be used (subject to approval of the Administrator), provided that the flow at the test site is stable and demonstrably parallel to the duct axis.

4.1.2.3 The flow system shall have the capacity to generate a test-section velocity around 915 m/min (3,000 ft/min). This velocity must be constant with time to guarantee steady flow during calibration. Note that Type S pitot tube coefficients obtained by single-velocity calibration at 915 m/min (3,000 ft/min) will generally be valid to within ±3 percent for the measurement of velocities above 305 m/min (1,000 ft/min) and to within ±5 to 6 percent for the measurement of velocities between 180 and 305 m/min (600 and 1,000 ft/min). If a more precise correlation between C_p and velocity is desired, the flow system shall have the capacity to generate at least four distinct, time-invariant test-section velocities covering the velocity range from 180 to 1,525 m/min (600 to 5,000 ft/min), and calibration data shall be taken at regular velocity intervals over this range (see Citations 9 and 14 in Section 6 for details).

4.1.2.4 Two entry ports, one each for the standard and Type S pitot tubes, shall be cut in the test section; the standard pitot entry port shall be located slightly downstream of the Type S port, so that the standard and Type S impact openings will lie in the same cross-sectional plane during calibration. To facilitate alignment of the pitot tubes during calibration, it is advisable that the test section be constructed of plexiglas or some other transparent material.

4.1.3 Calibration Procedure. Note that this procedure is a general one and must not be used without first referring to the special considerations presented in Section 4.1.5. Note also that this procedure applies only to single-velocity calibration. To obtain calibration data for the A and B sides of the Type S pitot tube, proceed as follows:

4.1.3.1 Make sure that the manometer is properly filled and that the oil is free from contamination and is of the proper density. Inspect and leak-check all pitot lines; repair or replace if necessary.

4.1.3.2 Level and zero the manometer. Turn on the fan and allow the flow to stabilize. Seal the Type S entry port.

4.1.3.3 Ensure that the manometer is level and zeroed. Position the standard pitot tube at the calibration point (determined as outlined in Section 4.1.5.1), and align the tube so that its tip is pointed directly into the flow. Particular car should be taken in aligning the tube to avoid yaw and pitch angles. Make sure that the entry port surrounding the tube is properly sealed.

4.1.3.4 Read Δp_{std} and record its value in a data table similar to the one shown in Figure 2-9. Remove the standard pitot tube from the duct and disconnect it from the manometer. Seal the standard entry port.

4.1.3.5 Connect the Type S pitot tube to the manometer. Open the Type S entry port. Check the manometer level and zero. Insert and align the Type S pitot tube so that its A side impact opening is at the same point as was the standard pitot tube and is pointed directly into the flow. Make sure that the entry port surrounding the tube is properly sealed.

4.1.3.6 Read Δp_s and enter its value in the data table. Remove the Type S pitot tube from the duct and disconnect it from the manometer.

4.1.3.7 Repeat steps 4.1.3.3 through 4.1.3.6 above until three pairs of Δp readings have been obtained.

4.1.3.8 Repeat steps 4.1.3.3 through 4.1.3.7 above for the B side of the Type S pitot tube.

4.1.3.9 Perform calculations, as described in Section 4.1.4 below.

4.1.4 Calculations.

4.1.4.1 For each of the six pairs of Δp readings (i.e., three from side A and three from side B) obtained in Section 4.1.3 above, calculate the value of the Type S pitot tube coeffficient as follows:

PITOT TUBE IDENTIFICATION NUMBER: _____ DATE: _____

CALIBRATED BY: _____

	"A" SIDE CALIBRATION			
RUN NO.	Δp_{std} cm H_2O (in. H_2O)	$\Delta p_{(s)}$ cm H_2O (in. H_2O)	$C_{p(s)}$	DEVIATION $C_{p(s)} - \bar{C}_p(A)$
1				
2				
3				
		$\bar{C}_p$ (SIDE A)		

	"B" SIDE CALIBRATION			
RUN NO.	Δp_{std} cm H_2O (in. H_2O)	$\Delta p_{(s)}$ cm H_2O (in. H_2O)	$C_{p(s)}$	DEVIATION $C_{p(s)} - \bar{C}_p(B)$
1				
2				
3				
		$\bar{C}_p$ (SIDE B)		

$$\text{AVERAGE DEVIATION} = \sigma\,(\text{A OR B}) = \frac{\sum_{1}^{3} \left| C_p(s) - \bar{C}_p(\text{A OR B}) \right|}{3} \longleftarrow \text{MUST BE} \leqslant 0.01$$

$$\left| \bar{C}_p\,(\text{SIDE A}) - \bar{C}_p\,(\text{SIDE B}) \right| \longleftarrow \text{MUST BE} \leqslant 0.01$$

Figure 2-9. Pitot tube calibration data.

$$C_{p(s)}=C_{p(std)}\sqrt{\frac{\Delta p_{std}}{\Delta p_s}}$$

Equation 2–2

where:

$C_{p(s)}$=Type S pitot tube coefficient
$C_{p(std)}$=Standard pitot tube coefficient; use 0.99 if the coefficient is unknown and the tube is designed according to the criteria of Sections 2.7.1 to 2.7.5 of this method.
Δp_{std}=Velocity head measured by the standard pitot tube, cm H_2O (in. H_2O)
Δp_s=Velocity head measured by the Type S pitot tube, cm H_2O (in H_2O)

4.1.4.2 Calculate C_p (side A), the mean A-side coefficient, and C_p (side B), the mean B-side coefficient: calculate the difference between these two average values.

4.1.4.3 Calculate the deviation of each of the three A-side values of $C_{p(s)}$ from C_p (side A), and the deviation of each B-side value of $C_{p(s)}$ from C_p C_p (side B). Use the following equation:

$$\text{Deviation}=C_{p(s)}-\overline{C}_p(\text{A or B})$$

Equation 2–3

4.1.4.4 Calculate δ, the average deviation from the mean, for both the A and B sides of the pitot tube. Use the following equation:

$$\sigma\,(\text{side A or B})=\frac{\sum_{1}^{3}|C_{p(s)}-\overline{C}_p(A \text{ or } B)|}{3}$$

Equation 2–4

4.1.4.5 Use the Type S pitot tube only if the values of δ (side A) and δ (side B) are less than or equal to 0.01 and if the absolute value of the difference between C_p (A) and C_p (B) is 0.01 or less.

4.1.5 Special considerations.

4.1.5.1 Selection of calibration point.

4.1.5.1.1 When an isolated Type S pitot tube is calibrated, select a calibration point at or near the center of the duct, and follow the procedures outlined in Sections 4.1.3 and 4.1.4 above. The Type S pitot coefficients so obtained, i.e., C_p (side A) and C_p (side B), will be valid, so long as either: (1) the isolated pitot tube is used; or (2) the pitot tube is used with other components (nozzle, thermocouple, sample probe) in an arrangement that is free from aerodynamic interference effects (see Figures 2-6 through 2-8).

4.1.5.1.2 For Type S pitot tube-thermocouple combinations (without sample probe), select a calibration point at or near the center of the duct, and follow the procedures outlined in Sections 4.1.3 and 4.1.4 above. The coefficients so obtained will be valid so long as the pitot tube-thermocouple combination is used by itself or with other components in an interference-free arrangement (Figures 2-6, and 2-8).

4.1.5.1.3 For assemblies with sample probes, the calibration point should be located at or near the center of the duct; however, insertion of a probe sheath into a small duct may cause significant cross-sectional area blockage and yield incorrect coefficient values (Citation 9 in Section 6). Therefore, to minimize the blockage effect, the calibration point may be a few inches off-center if necessary. The actual blockage effect will be negligible when the theoretical blockage, as determined by a projected-area model of the probe sheath, is 2 percent or less of the duct cross-sectional area for assemblies without external sheaths (Figure 2-10a), and 3 percent or less for assemblies with external sheaths (Figure 2-10b).

4.1.5.2 For those probe assemblies in which pitot tube-nozzle interference is a factor (i.e., those in which the pitot-nozzle separation distance fails to meet the specification illustrated in Figure 2-6a), the value of $C_{p(s)}$ depends upon the amount of free-space between the tube and nozzle, and therefore is a function of nozzle size. In these instances, separate calibrations shall be performed with each of the commonly used nozzle sizes in place. Note that the single-velocity calibration technique is acceptable for this purpose, even though the larger nozzle sizes (>0.635 cm or ¼ in.) are not ordinarily used for isokinetic sampling at velocities around 915 m/min (3,000 ft/min), which is the calibration velocity; note also that it is not necessary to draw an isokinetic sample during calibration (see Citation 19 in Section 6).

4.1.5.3 For a probe assembly constructed such that its pitot tube is always used in the same orientation, only one side of the pitot tube need be calibrated (the side which will face the flow). The pitot tube must still meet the alignment specifications of Figure 2-2 or 2-3, however, and must have an average deviation (δ) value of 0.01 or less (see Section 4.1.4.4).

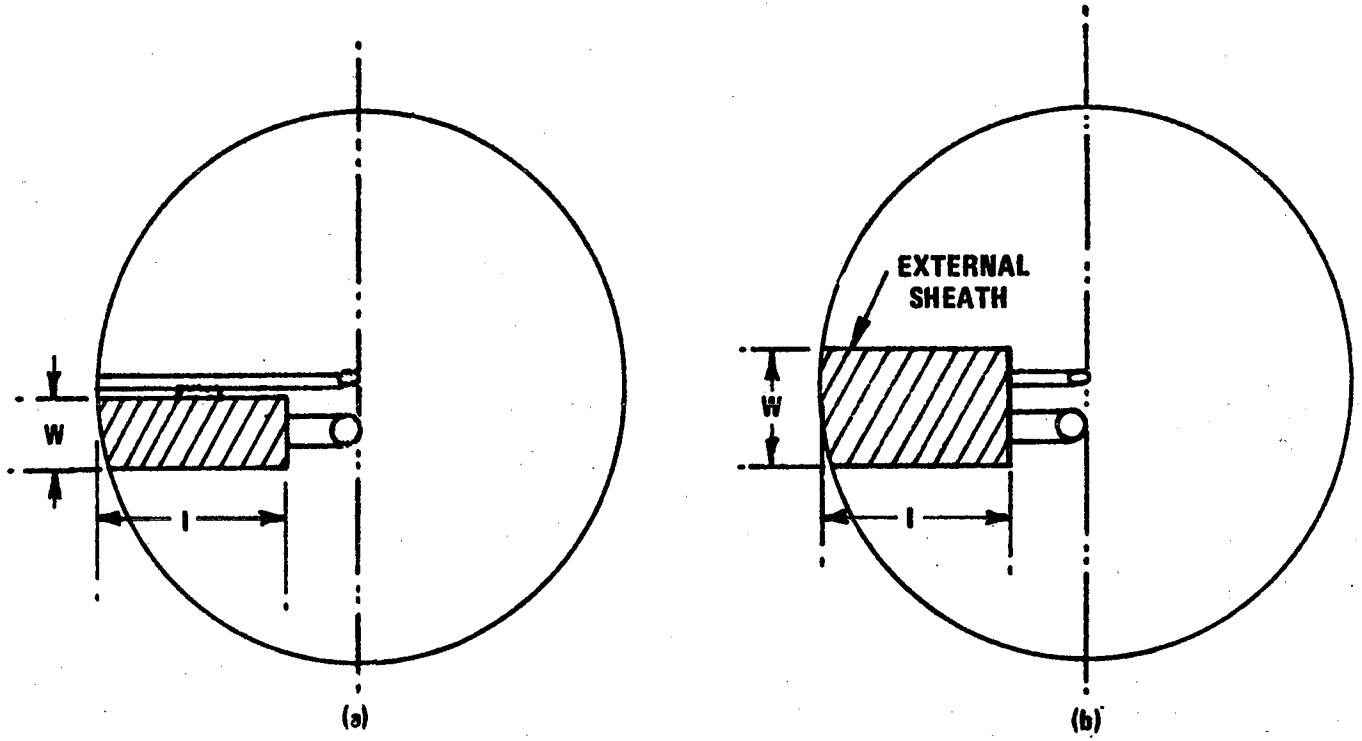

$$\text{ESTIMATED SHEATH BLOCKAGE (\%)} = \left[\frac{l \times W}{\text{DUCT AREA}}\right] \times 100$$

Figure 2-10. Projected-area models for typical pitot tube assemblies.

Figure 2-10. Projected-area models for typical pitot tube assemblies.

4.1.6 Field Use and Recalibration.

4.1.6.1 Field Use.

4.1.6.1.1 When a Type S pitot tube (isolated tube or assembly) is used in the field, the appropriate coefficient value (whether assigned or obtained by calibration) shall be used to perform velocity calculations. For calibrated Type S pitot tubes, the A side coefficient shall be used when the A side of the tube faces the flow, and the B side coefficient shall be used when the B side faces the flow; alternatively, the arithmetic average of the A and B side coefficient values may be used, irrespective of which side faces the flow.

4.1.6.1.2 When a probe assembly is used to sample a small duct (12 to 36 in. in diameter), the probe sheath sometimes blocks a significant part of the duct cross-section, causing a reduction in the effective value of $C_{p(s)}$. Consult Citation 9 in Section 6 for details. Conventional pitot-sampling probe assemblies are not recommended for use in ducts having inside diameters smaller than 12 inches (Citation 16 in Section 6).

4.1.6.2 Recalibration.

4.1.6.2.1 Isolated Pitot Tubes. After each field use, the pitot tube shall be carefully reexamined in top, side, and end views. If the pitot face openings are still aligned within the specifications illustrated in Figure 2-2 or 2-3, it can be assumed that the baseline coefficient of the pitot tube has not changed. If, however, the tube has been damanged to the extent that it no longer meets the specifications of Figure 2-2 or 2-3, the damage shall either be repaired to restore proper alignment of the face openings or the tube shall be discarded.

4.1.6.2.2 Pitot Tube Assemblies. After each field use, check the face opening alignment of the pitot tube, as in Section 4.1.6.2.1; also, remeasure the intercomponent spacings of the assembly. If the intercomponent spacings have not changed and the face opening alignment is acceptable, it can be assumed that the coefficient of the assembly has not changed. If the face opening alignment is no longer within the specifications of Figures 2-2 or 2-3, either repair the damage or replace the pitot tube (calibrating the new assembly, if necessary). If the intercomponent spacings have changed, restore the original spacings or recalibrate the assembly.

4.2 Standard pitot tube (if applicable). If a standard pitot tube is used for the velocity traverse, the tube shall be constructed according to the criteria of Section 2.7 and shall be assigned a baseline coefficient value of 0.99. If the standard pitot tube is used as part of an assembly, the tube shall be in an interference-free arrangement (subject to the approval of the Administrator).

4.3 Temperature Gauges. After each field use, calibrate dial thermometers, liquid-filled bulb thermometers, thermocouple-potentiometer systems, and other gauges at a temperature within 10 percent of the average absolute stack temperature. For temperatures up to 405° C (761° F), use an ASTM mercury-in-glass reference thermometer, or equivalent, as a reference; alternatively, either a reference thermocouple and potentiometer (calibrated by NBS) or thermometric fixed points, e.g., ice bath and boiling water (corrected for barometric pressure) may be used. For temperatures above 405° C (761° F), use an NBS-calibrated reference thermocouple-potentiometer system or an alternate reference, subject to the approval of the Administrator.

If, during calibration, the absolute temperatures measured with the gauge being calibrated and the reference gauge agree within 1.5 percent, the temperature data taken in the field shall be considered valid. Otherwise, the pollutant emission test shall either be considered invalid or adjustments (if appropriate) of the test results shall be made, subject to the approval of the Administrator.

4.4 Barometer. Calibrate the barometer used against a mercury barometer.

5. *Calculations*

Carry out calculations, retaining at least one extra decimal figure beyond that of the acquired data. Round off figures after final calculation.

5.1 Nomenclature.

A = Cross-sectional area of stack, m^2 (ft^2).

B_{ws} = Water vapor in the gas stream (from Method 5 or Reference Method 4), proportion by volume.

C_p = Pitot tube coefficient, dimensionless.

K_p = Pitot tube constant,

$$34.97 \frac{\text{m}}{\text{sec}} \left[\frac{(g/g\text{-mole})(\text{mm Hg})}{(°\text{K})(\text{mm } H_2O)} \right]^{1/2}$$

for the metric system and

$$85.49 \frac{\text{ft}}{\text{sec}} \left[\frac{(\text{lb/lb-mole})(\text{in. Hg})}{(°\text{R})(\text{in. } H_2O)} \right]^{1/2}$$

for the English system.

M_d = Molecular weight of stack gas, dry basis (see Section 3.6) g/g-mole (lb/lb-mole).

M_s = Molecular weight of stack gas, wet basis, g/g-mole (lb/lb-mole).

$= M_d (1 - B_{ws}) + 18.0 B_{ws}$

Equation 2-5

P_{bar}=Barometric pressure at measurement site, mm Hg (in. Hg).
P_g=Stack static pressure, mm Hg (in. Hg).

P_s=Absolute stack gas pressure, mm Hg (in. Hg).
$=P_{bar}+P_g$

Equation 2-6

P_{std}=Standard absolute pressure, 760 mm Hg (29.92 in. Hg).
Q_{sd}=Dry volumetric stack gas flow rate corrected to standard conditions, dscm/hr (dscf/hr).
t_s=Stack temperature, °C (°F).
T_s=Absolute stack temperature, °K, (°R).
$=273+t_s$ for metric

Equation 2-7

$=460+t_s$ for English

Equation 2-8

T_{std}=Standard absolute temperature, 293 °K (528° R)
v_s=Average stack gas velocity, m/sec (ft/sec).
Δp=Velocity head of stack gas, mm H_2O (in. H_2O).
3,600=Conversion factor, sec/hr.
18.0=Molecular weight of water, g/g-mole (lb/lb-mole).

5.2 Average stack gas velocity.

$$v_s=K_pC_p(\sqrt{\Delta p})_{avg}\sqrt{\frac{T_{s(avg)}}{P_sM_s}}$$

Equation 2-9

5.3 Average stack gas dry volumetric flow rate.

$$Q_{sd}=3{,}600\ (1-B_{ws})v_sA\left(\frac{T_{std}}{T_{s(avg)}}\right)\left(\frac{P_s}{P_{std}}\right)$$

Equation 2-10

6. *Bibliography*

1. Mark, L. S. Mechanical Engineers' Handbook. New York, McGraw-Hill Book Co., Inc. 1951.

2. Perry, J. H. Chemical Engineers' Handbook. New York. McGraw-Hill Book Co., Inc. 1960.

3. Shigehara, R. T., W. F. Todd, and W. S. Smith. Significance of Errors in Stack Sampling Measurements. U.S. Environmental Protection Agency, Research Triangle Park, N.C. (Presented at the Annual Meeting of the Air Pollution Control Association, St. Louis, Mo., June 14-19, 1970.)

4. Standard Method for Sampling Stacks for Particulate Matter. In: 1971 Book of ASTM Standards, Part 23. Philadelphia, Pa. 1971. ASTM Designation D-2928-71.

5. Vennard, J. K. Elementary Fluid Mechanics. New York. John Wiley and Sons, Inc. 1947.

6. Fluid Meters—Their Theory and Application. American Society of Mechanical Engineers, New York, N.Y. 1959.

7. ASHRAE Handbook of Fundamentals. 1972. p. 208.

8. Annual Book of ASTM Standards, Part 26. 1974. p. 648.

9. Vollaro, R. F. Guidelines for Type S Pitot Tube Calibration. U.S. Environmental Protection Agency. Research Triangle Park, N.C. (Presented at 1st Annual Meeting, Source Evaluation Society, Dayton, Ohio, September 18, 1975.)

10. Vollaro, R. F. A Type S Pitot Tube Calibration Study. U.S. Environmental Protection Agency, Emission Measurement Branch, Research Triangle Park, N.C. July 1974.

11. Vollaro, R. F. The Effects of Impact Opening Misalignment on the Value of the Type S Pitot Tube Coefficient. U.S. Environmental Protection Agency, Emission Measurement Branch, Research Triangle Park, N.C. October 1976.

12. Vollaro, R. F. Establishment of a Basline Coefficient Value for Properly Constructed Type S Pitot Tubes. U.S. Environmental Protection Agency, Emission Measurement Branch, Research Triangle Park N.C. November 1976.

13. Vollaro, R. F. An Evaluation of Single-Velocity Calibration Technique as a Means of Determining Type S Pitot Tubes Coefficient. U.S. Environmental Protection Agency, Emission Measurement Branch, Research Triangle Park N.C. August 1975.

14. Vollaro, R. F. The Use of Type S Pitot Tubes for the Measurement of Low Velocities. U.S. Environmental Protection Agency, Emission Measurement Branch, Research Triangle Park N.C. November 1976.

15. Smith, Marvin L. Velocity Calibration of EPA Type Source Sampling Probe. United Technologies Corporation, Pratt and Whitney Aircraft Division, East Hartford, Conn. 1975.

16. Vollaro, R. F. Recommended Procedure for Sample Traverses in Ducts Smaller than 12 Inches in Diameter. U.S. Environmental Protection Agency, Emission Measurement Branch, Research Triangle Park N.C. November 1976.

17. Ower, E. and R. C. Pankhurst. The Measurement of Air Flow, 4th Ed., London, Pergamon Press. 1966.

18. Vollaro, R. F. A Survey of Commercially Available Instrumentation for the Mea-

surement of Low-Range Gas Velocities. U.S. Environmental Protection Agency, Emission Measurement Branch, Research Triangle Park N.C. November 1976. (Unpublished Paper)

19. Gnyp, A. W., C. C. St. Pierre, D. S. Smith, D. Mozzon, and J. Steiner. An Experimental Investigation of the Effect of Pitot Tube-Sampling Probe Configurations on the Magnitude of the S Type Pitot Tube Coefficient for Commercially Available Source Sampling Probes. Prepared by the University of Windsor for the Ministry of the Environment, Toronto, Canada. February 1975.

METHOD 3—GAS ANALYSIS FOR CARBON DIOXIDE, OXYGEN, EXCESS AIR, AND DRY MOLECULAR WEIGHT

1. *Principle and Applicability*

1.1 Principle. A gas sample is extracted from a stack, by one of the following methods: (1) single-point, grab sampling; (2) single-point, integrated sampling; or (3) multi-point, integrated sampling. The gas sample is analyzed for percent carbon dioxide (CO_2), percent oxygen (O_2), and, if necessary, percent carbon monoxide (CO). If a dry molecular weight determination is to be made, either an Orsat or a Fyrite [1] analyzer may be used for the analysis; for excess air or emission rate correction factor determination, an Orsat analyzer must be used.

1.2 Applicability. This method is applicable for determining CO_2 and O_2 concentrations, excess air, and dry molecular weight of a sample from a gas stream of a fossil-fuel combustion process. The method may also be applicable to other processes where it has been determined that compounds other than CO_2, O_2, CO, and nitrogen (n_2) are not present in concentrations sufficient to affect the results.

Other methods, as well as modifications to the procedure described herein, are also applicable for some or all of the above determinations. Examples of specific methods and modifications include: (1) a multi-point sampling method using an Orsat analyzer to analyze individual grab samples obtained at each point; (2) a method using CO_2 or O_2 and stoichiometric calculations to determine dry molecular weight and excess air; (3) assigning a value of 30.0 for dry molecular weight, in lieu of actual measurements, for processes burning natural gas, coal, or oil. These methods and modifications may be used, but are subject to the approval of the Administrator, U.S. Environmental Protection Agency.

2. *Apparatus*

As an alternative to the sampling apparatus and systems described herein, other sampling systems (e.g., liquid displacement) may be used provided such systems are capable of obtaining a representative sample and maintaining a constant sampling rate, and are otherwise capable of yielding acceptable results. Use of such systems is subject to the approval of the Administrator.

2.1 Grab Sampling (Figure 3-1).

2.1.1 Probe. The probe should be made of stainless steel or borosilicate glass tubing and should be equipped with an in-stack or out-stack filter to remove particulate matter (a plug of glass wool is satisfactory for this purpose). Any other materials inert to O_2, CO_2, CO, and N_2 and resistant to temperature at sampling conditions may be used for the probe; examples of such material are aluminum, copper, quartz glass and Teflon.

2.1.2 Pump. A one-way squeeze bulb, or equivalent, is used to transport the gas sample to the analyzer.

2.2 Integrated Sampling (Figure 3-2).

2.2.1 Probe. A probe such as that described in Section 2.1.1 is suitable.

[1] Mention of trade names or specific products does not constitute endorsement by the Environmental Protection Agency.

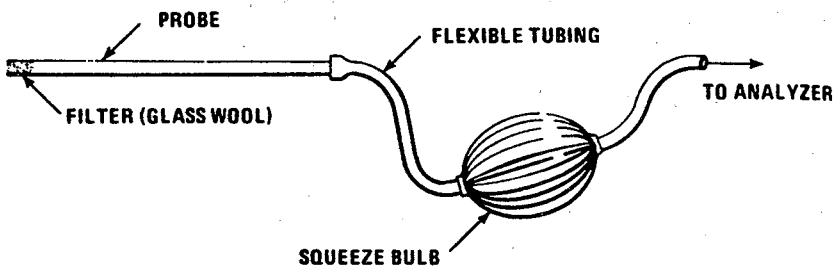

Figure 3-1. Grab-sampling train.

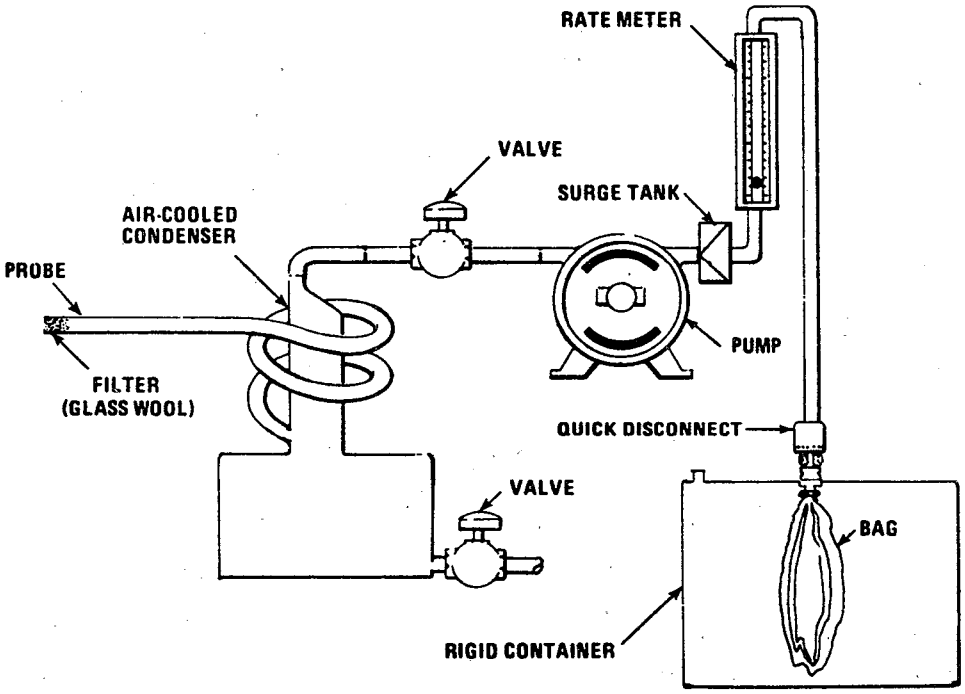

Figure 3-2. Integrated gas-sampling train.

2.2.2 Condenser. An air-cooled or water-cooled condenser, or other condenser that will not remove O_2, CO_2, CO, and N_2, may be used to remove excess moisture which would interfere with the operation of the pump and flow meter.

2.2.3 Valve. A needle valve is used to adjust sample gas flow rate.

2.2.4 Pump. A leak-free, diaphragm-type pump, or equivalent, is used to transport sample gas to the flexible bag. Install a small surge tank between the pump and

rate meter to eliminate the pulsation effect of the diaphragm pump on the rotameter.

2.2.5 Rate Meter. The rotameter, or equivalent rate meter, used should be capable of measuring flow rate to within ±2 percent of the selected flow rate. A flow rate range of 500 to 1000 cm^3/min is suggested.

2.2.6 Flexible Bag. Any leak-free plastic (e.g., Tedlar, Mylar, Teflon) or plastic-coated aluminum (e.g., aluminized Mylar) bag, or equivalent, having a capacity consistent with the selected flow rate and time length of the test run, may be used. A capacity in the range of 55 to 90 liters is suggested.

To leak-check the bag, connect it to a water manometer and pressurize the bag to 5 to 10 cm H_2O (2 to 4 in. H_2O). Allow to stand for 10 minutes. Any displacement in the water manometer indicates a leak. An alternative leak-check method is to pressurize the bag to 5 to 10 cm H_2O (2 to 4 in. H_2O) and allow to stand overnight. A deflated bag indicates a leak.

2.2.7 Pressure Gauge. A water-filled U-tube manometer, or equivalent, of about 28 cm (12 in.) is used for the flexible bag leak-check.

2.2.8 Vacuum Gauge. A mercury manometer, or equivalent, of at least 760 mm Hg (30 in. Hg) is used for the sampling train leak-check.

2.3 Analysis. For Orsat and Fyrite analyzer maintenance and operation procedures, follow the instructions recommended by the manufacturer, unless otherwise specified herein.

2.3.1 Dry Molecular Weight Determination. An Orsat analyzer or Fyrite type combustion gas analyzer may be used.

2.3.2 Emission Rate Correction Factor or Excess Air Determination. An Orsat analyzer must be used. For low CO_2 (less than 4.0 percent) or high O_2 (greater that 15.0 percent) concentrations, the measuring burette of the Orsat must have at least 0.1 percent subdivisions.

3. *Dry Molecular Weight Determination*

Any of the three sampling and analytical procedures described below may be used for determining the dry molecular weight.

3.1 Single-Point, Grab Sampling and Analytical Procedure.

3.1.1 The sampling point in the duct shall either be at the centroid of the cross section or at a point no closer to the walls than 1.00 m (3.3 ft), unless otherwise specified by the Administrator.

3.1.2 Set up the equipment as shown in Figure 3-1, making sure all connections ahead of the analyzer are tight and leak-free. If and Orsat analyzer is used, it is recommended that the analyzer be leaked-checked by following the procedure in Section 5; however, the leak-check is optional.

3.1.3 Place the probe in the stack, with the tip of the probe positioned at the sampling point; purge the sampling line. Draw a sample into the analyzer and immediately analyze it for percent CO_2 and percent O_2. Determine the percentage of the gas that is N_2 and CO by subtracting the sum of the percent CO_2 and percent O_2 from 100 percent. Calculate the dry molecular weight as indicated in Section 6.3.

3.1.4 Repeat the sampling, analysis, and calculation procedures, until the dry molecular weights of any three grab samples differ from their mean by no more than 0.3 g/g-mole (0.3 lb/lb-mole). Average these three molecular weights, and report the results to the nearest 0.1 g/g-mole (lb/lb-mole).

3.2 Single-Point, Integrated Sampling and Analytical Procedure.

3.2.1 The sampling point in the duct shall be located as specified in Section 3.1.1.

3.2.2 Leak-check (optional) the flexible bag as in Section 2.2.6. Set up the equipment as shown in Figure 3-2. Just prior to sampling, leak-check (optional) the train by placing a vacuum gauge at the condenser inlet, pulling a vacuum of at least 250 mm Hg (10 in. Hg), plugging the outlet at the quick disconnect, and then turning off the pump. The vacuum should remain stable for at least 0.5 minute. Evacuate the flexible bag. Connect the probe and place it in the stack, with the tip of the probe positioned at the sampling point; purge the sampling line. Next, connect the bag and make sure that all connections are tight and leak free.

3.2.3 Sample at a constant rate. The sampling run should be simultaneous with, and for the same total length of time as, the pollutant emission rate determination. Collection of at least 30 liters (1.00 ft^3) of sample gas is recommended; however, smaller volumes may be collected, if desired.

3.2.4 Obtain one integrated flue gas sample during each pollutant emission rate determination. Within 8 hours after the sample is taken, analyze it for percent CO_2 and percent O_2 using either an Orsat analyzer or a Fyrite-type combustion gas analyzer. If an Orsat analyzer is used, it is recommended that the Orsat leak-check described in Section 5 be performed before this determination; however, the check is optional. Determine the percentage of the gas that is N_2 and CO by subtracting the sum of the percent CO_2 and percent O_2 from 100 percent. Calculate the dry molecular weight as indicated in Section 6.3.

3.2.5 Repeat the analysis and calculation procedures until the individual dry molecular weights for any three analyses differ from their mean by no more than 0.3 g/g-mole (0.3 lb/lb-mole). Average these three molecular weights, and report the results to the nearest 0.1 g/g-mole (0.1 lb/lb-mole).

3.3 Multi-Point, Integrated Sampling and Analytical Procedure.

3.3.1 Unless otherwise specified by the Administrator, a minimum of eight traverse points shall be used for circular stacks having diameters less than 0.61 m (24 in.), a minimum of nine shall be used for rectangular stacks having equivalent diameters less than 0.61 m (24 in.), and a minimum of twelve traverse points shall be used for all other cases. The traverse points shall be located according to Method 1. The use of fewer points is subject to approval of the Administrator.

3.3.2 Follow the procedures outlined in sections 3.2.2 throught 3.2.5, except for the following: traverse all sampling points and sample at each point for an equal length of time. Record sampling data as shown in Figure 3-3.

4. *Emission Rate Correction Factor or Excess Air Determination*

NOTE: A Fyrite-type combustion gas analyzer is not acceptable for excess air or emission rate correction factor determination, unless approved by the Administrator. If both percent CO_2 and percent O_2 are measured, the analytical results of any of the three procedures given below may also be used for calculating the dry molecular weight.

Each of the three procedures below shall be used only when specified in an applicable subpart of the standards. The use of these procedures for other purposes must have specific prior approval of the Administrator.

4.1 Single-Point, Grab Sampling and Analytical Procedure.

4.1.1 The sampling point in the duct shall either be at the centroid of the cross-section or at a point no closer to the walls than 1.00 m (3.3 ft), unless otherwise specified by the Administrator.

4.1.2 Set up the equipment as shown in Figure 3-1, making sure all connections ahead of the analyzer are tight and leak-free. Leak-check the Orsat analyzer according to the procedure described in Section 5. This leak-check is mandatory.

TIME	TRAVERSE PT.	Q 1pm	% DEV.[a]
	AVERAGE		

$$^{a}\%\ DEV = \left(\frac{Q - Q_{avg}}{Q_{avg}}\right) 100 \qquad (MUST\ BE \leq 10\%)$$

Figure 3-3. Sampling rate data.

4.1.3 Place the probe in the stack, with the tip of the probe positioned at the sampling point; purge the sampling line. Draw a sample into the analyzer. For emission rate correction factor determination, immediately analyze the sample, as outlined in Sections 4.1.4 and 4.1.5, for percent CO_2 or percent O_2. If excess air is desired, proceed as follows: (1) immediately analyze the sample, as in Sections 4.1.4 and 4.1.5, for percent CO_2, O_2, and CO; (2) determine the percentage of the gas that is N_2 by subtracting the

sum of the percent CO_2, percent O_2, and percent CO from 100 percent; and (3) calculate percent excess air as outlined in Section 6.2.

4.1.4 To insure complete absorption of the CO_2, O_2, or if applicable, CO, make repeated passes through each absorbing solution until two consecutive readings are the same. Several passes (three or four) should be made between readings. (If constant readings cannot be obtained after three consecutive readings, replace the absorbing solution.)

4.1.5 After the analysis is completed, leak-check (mandatory) the Orsat analyzer once again, as described in Section 5. For the results of the analysis to be valid, the Orsat analyzer must pass this leak test before and after the analysis.

NOTE: Since this single-point, grab sampling and analytical procedure in normally conducted in conjunction with a single-point, grab sampling and analytical procedure for a pollutant, only one analysis is ordinarily conducted. Therefore, great care must be taken to obtain a valid sample and analysis. Although in most cases only CO_2 or O_2 is required, it is recommended that both CO_2 and O_2 be measured, and that Citation 5 in the Bibliography be used to validate the analytical data.

4.2 Single-Point, Integrated Sampling and Analytical Procedure.

4.2.1 The sampling point in the duct shall be located as specified in Section 4.1.1.

4.2.2 Leak-check (mandatory) the flexible bag as in Section 2.2.6. Set up the equipment as shown in Figure 3-2. Just prior to sampling, leak-check (mandatory) the train by placing a vacuum gauge at the condenser inlet, pulling a vacuum of a least 250 mm Hg (10 in. Hg), plugging the outlet at the quick disconnect, and then turning off the pump. The vacuum shall remain stable for at least 0.5 minute. Evacuate the flexible bag. Connect the probe and place it in the stack, with the tip of the probe positioned at the sampling point; purge the sampling line. Next, connect the bag and make sure that all connections are tight and leak free.

4.2.3 Sample at a constant rate, or as specified by the Administrator. The sampling run must be simultaneous with, and for the same total lengh of time as, the pollutant emission rate determination. Collect at least 30 liters (1.00 ft^3) of sample gas. Smaller volumes may be collected, subject to approval of the Administrator.

4.2.4 Obtain one integrated flue gas sample during each pollutant emission rate determination. For emission rate correction factor determination, analyze the sample within 4 hours after it is taken for percent CO_2 or percent O_2 (as outlined in Sections 4.2.5 through 4.2.7). The Orsat analyzer must be leak-check (see Section 5) before the analysis. If excess air is desired, proceed as follows: (1) within 4 hours after the sample is taken, analyze it (as in Sections 4.2.5 through 4.2.7) for percent CO_2, O_2, and CO; (2) determine the percentage of the gas that is N_2 by subtracting the sum of the percent CO_2, percent O_2, and percent CO from 100 percent; (3) calculate percent excess air, as outlined in Section 6.2.

4.2.5 To insure complete absorption of the CO_2, O_2, or if applicable, CO, make repeated passes through each absorbing solution until two consecutive readings are the same. Several passes (three of four) should be make between readings. (If constant readings cannot be obtained after three consecutive readings, replace the absorbing solution.)

4.2.6 Repeat the analysis until the following criteria are met:

4.2.6.1 For percent CO_2, repeat the analytical procedure until the results of any three analyses differ by no more that (a) 0.3 percent by volume when CO_2 is greater than 4.0 percent or (b) 0.2 percent by volume when CO_2 is less than or equal to 4.0 percent. Average the three acceptable values of percent CO_2 and report the results to the nearest 0.1 percent.

4.2.6.2 For percent O_2, repeat the analytical procedure until the results of any three analyses differ by no more than (a) 0.3 percent by volume when O_2 is less than 15.0 percent or (b) 0.2 percent by volume when O_2 is greater than or equal to 15.0 percent. Average the three acceptable values of percent O_2 and report the results to the nearest 0.1 percent.

4.2.6.3 For percent CO, repeat the analytical procedure until the results of any three analyses differ by no more than 0.3 percent. Average the three acceptable values of percent CO and report the results to the nearest 0.1 percent.

4.2.7 After the analysis is completed, leak-check (mandatory) the Orsat analyzer once again, as described in Section 5. For the results of the analysis to be valid, the Orsat analyzer must pass this leak test before an after the analysis.

NOTE: Although in most instances only CO_2 or O_2 is required, it is recommended that both CO_2 and O_2 be measured, and that Citation 5 in the Bibliography be used to validate the analytical data.

4.3 Multi-Point, Integrated Sampling and Analytical Procedure.

4.3.1 Both the minimum number of sampling points and the sampling point location shall be as specified in Section 3.3.1 of this method. The use of fewer points than specified is subject to the approval of the Administrator.

4.3.2 Follow the procedures outlined in Sections 4.2.2 through 4.2.7, except for the following: Traverse all sampling points and

sample at each point for an equal length of time. Record sampling data as shown in Figure 3-3.

5. *Leak-Check Procedure for Orsat Analyzers*

Moving an Orsat analyzer frequently causes it to leak. Therefore, an Orsat analyzer should be throughly leak-checked on site before the flue gas sample is introduced into it. The procedure for leak-checking an Orsat analyzer is:

5.1.1 Bring the liquid level in each pipette up to the reference mark on the capillary tubing and then close the pipette stopcock.

5.1.2 Raise the leveling bulb sufficiently to bring the confining liquid meniscus onto the graduated portion of the burette and then close the manifold stopcock.

5.1.3 Record the meniscus position.

5.1.4 Observe the menicus in the burette and the liquid level in the pipette for movement over the next 4 minutes.

5.1.5 For the Orsat analyzer to pass the leak-check, two conditions must be met.

5.1.5.1 The liquid level in each pipette must not fall below the bottom of the capillary tubing during this 4-minute interval.

5.1.5.2 The meniscus in the burette must not change by more than 0.2 ml during this 4-minute interval.

5.1.6 If the analyzer fails the leak-check procedure, all rubber connections and stopcocks should be checked until the cause of the leak is identified. Leaking stopcocks must be disassembled, cleaned, and regreased. Leaking rubber connections must be replaced. After the analyzer is reassembled, the leak-check procedure must be repeated.

6. *Calculations*

6.1 Nomenclature.

M_d=Dry molecular weight, g/g-mole (lb/lb-mole).

%EA=Percent excess air.

$\%CO_2$=Percent CO_2 by volume (dry basis).

$\%O_2$=Percent O_2 by volume (dry basis).

%CO=Percent CO by volume (dry basis).

$\%N_2$=Percent N_2 by volume (dry basis).

0.264=Ratio of O_2 to N_2 in air, v/v.

0.280=Molecular weight of N_2 or CO, divided by 100.

0.320=Molecular weight of O_2 divided by 100.

0.440=Molecular weight of CO_2 divided by 100.

6.2 Percent Excess Air. Calculate the percent excess air (if applicable), by substituting the appropriate values of percent O_2, CO, and N_2 (obtained from Section 4.1.3 or 4.2.4) into Equation 3-1.

$$\%EA=\left[\frac{\%O_2-0.5\%CO}{0.264\,\%N_2(\%O_2-0.5\%CO)}\right]100$$

Equation 3-1

NOTE: The equation above assumes that ambient air is used as the source of O_2 and that the fuel does not contain appreciable amounts of N_2 (as do coke oven or blast furnace gases). For those cases when appreciable amounts of N_2 are present (coal, oil, and natural gas do not contain appreciable amounts of N_2) or when oxygen enrichment is used, alternate methods, subject to approval of the Administrator, are required.

6.3 Dry Molecular Weight. Use Equation 3-2 to calculate the dry molecular weight of the stack gas

$$M_d=0.440(\%CO_2)+0.320(\%O_2)+0.280(\%N_2+\%CO)$$

Equation 3-2

NOTE: The above equation does not consider argon in air (about 0.9 percent, moleculars weight of 37.7). A negative error of about 0.4 percent is introduced. The tester may opt to include argon in the analysis using procedures subject to approval of the Administrator.

7. *Bibliography*

1. Altshuller, A. P. Storage of Gases and Vapors in Plastic Bags. International Journal of Air and Water Pollution. *6*:75-81. 1963.

2. Conner, William D. and J. S. Nader. Air Sampling with Plastice Bags. Journal of the American Industrial Hygiene Association. *25*:291-297. 1964.

3. Burrell Manual for Gas Analysts, Seventh edition. Burrell Corporation, 2223 Fifth Avenue, Pittsburgh, Pa. 15219. 1951.

4. Mitchell, W. J. and M. R. Midgett. Field Reliability of the Orsat Analyzer. Journal of Air Pollution Control Association *26*:491-495. May 1976.

5. Shigehara, R. T., R. M. Neulicht, and W. S. Smith. Validating Orsat Analysis Data from Fossil Fuel-Fired Units. Stack Sampling News. *4*(2):21-26. August, 1976.

METHOD 4—DETERMINATION OF MOISTURE CONTENT IN STACK GASES

1. *Principle and Applicability*

1.1 Principle. A gas sample is extracted at a constant rate from the source; moisture is removed from the sample stream and determined either volumetrically or gravimetrically.

1.2 Applicability. This method is applicable for determining the moisture content of stack gas.

Two procedures are given. The first is a reference method, for accurate determina-

tions of moisture content (such as are needed to calculate emission data). The second is an approximation method, which provides estimates of percent moisture to aid in setting isokinetic sampling rates prior to a pollutant emission measurement run. The approximation method described herein is only a suggested approach; alternative means for approximating the moisture content, e.g., drying tubes, wet bulb-dry bulb techniques, condensation techniques, stoichiometric calculations, previous experience, etc., are also acceptable.

The reference method is often conducted simultaneously with a pollutant emission measurement run; when it is, calculation of percent isokinetic, pollutant emission rate, etc., for the run shall be based upon the results of the reference method or its equivalent; these calculations shall not be based upon the results of the approximation method, unless the approximation method is shown, to the satisfaction of the Administrator, U.S. Environmental Protection Agency, to be capable of yielding results within 1 percent H_2O of the reference method.

NOTE: The reference method may yield questionable results when applied to saturated gas streams or to streams that contain water droplets. Therefore, when these conditions exist or are suspected, a second determination of the moisture content shall be made simultaneously with the reference method, as follows: Assume that the gas stream is saturated. Attach a temperature sensor [capable of measuring to ±1° C (2° F)] to the reference method probe. Measure the stack gas temperature at each traverse point (see Section 2.2.1) during the reference method traverse; calculate the average stack gas temperature. Next, determine the moisture percentage, either by: (1) using a psychrometric chart and making appropriate corrections if stack pressure is different from that of the chart, or (2) using saturation vapor pressure tables. In cases where the pyschrometric chart or the saturation vapor pressure tables are not applicable (based on evaluation of the process), alternate methods, subject to the approval of the Administrator, shall be used.

2. *Reference Method*

The procedure described in Method 5 for determining moisture content is acceptable as a reference method.

2.1 Apparatus. A schematic of the sampling train used in this reference method is shown in Figure 4-1. All components shall be maintained and calibrated according to the procedure outlined in Method 5.

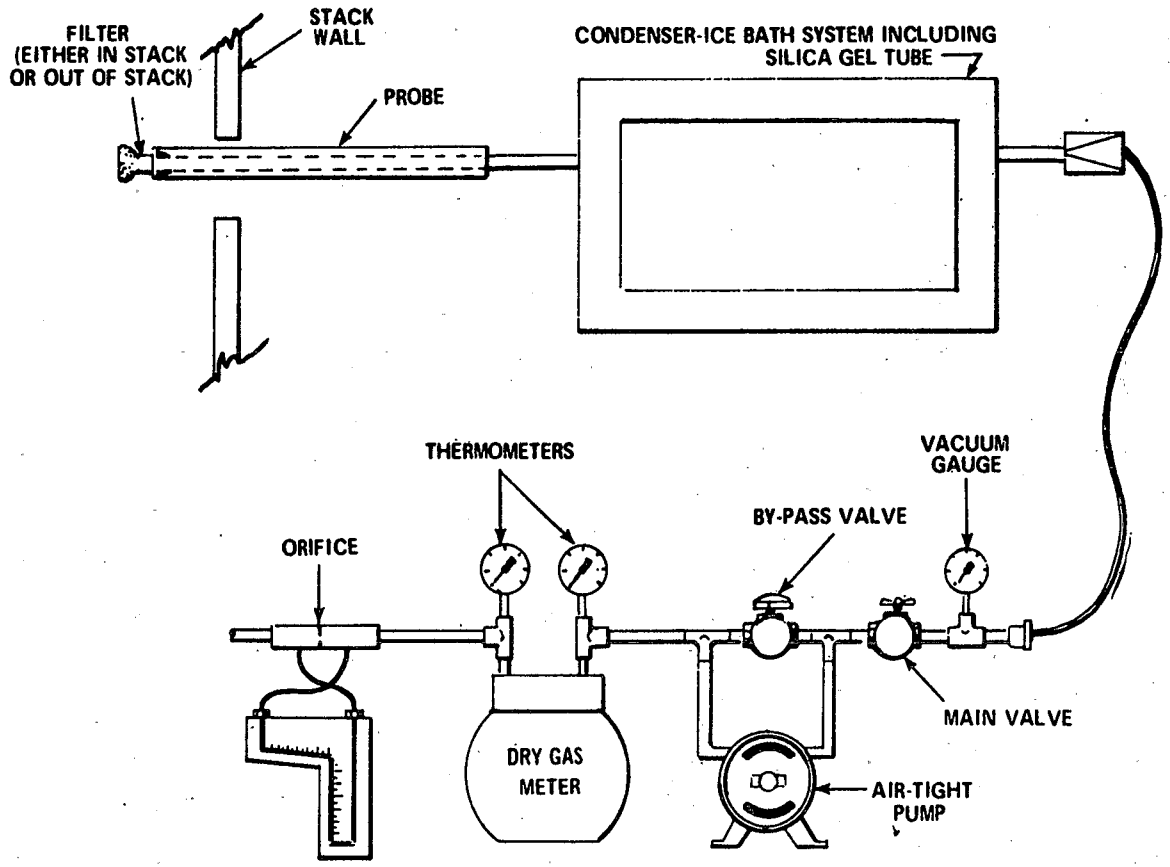

Figure 4-1. Moisture sampling train-reference method.

2.1.1 Probe. The probe is constructed of stainless steel or glass tubing, sufficiently heated to prevent water condensation, and is equipped with a filter, either in-stack (e.g., a plug of glass wool inserted into the end of the probe) or heated out-stack (e.g., as described in Method 5), to remove particular matter.

When stack conditions permit, other metals or plastic tubing may be used for the probe, subject to the approval of the Administrator.

2.1.2 Condenser. The condenser consists of four impingers connected in series with ground glass, leak-free fittings or any similarly leak-free non-contaminating fittings. The first, third, and fourth impingers shall be of the Greenburg-Smith design, modified by replacing the tip with a 1.3 centimeter (½ inch) ID glass tube extending to about 1.3 cm (½ in.) from the bottom of the flask. The second impinger shall be of the Greenburg-Smith design with the standard tip. Modifications (e.g., using flexible connections between the impingers, using materials other than glass, or using flexible vacuum lines to connect the filter holder to the condenser) may be used, subject to the approval of the Administrator.

The first two impingers shall contain known volumes of water, the third shall be empty, and the fourth shall contain a known weight of 6- to 16-mesh indicating type silica gel, or equivalent desiccant. If the silica gel has been previously used, dry at 175° C (350° F) for 2 hours. New silica gel may be used as received. A thermometer, capable of measuring temperature to within 1° C (2° F), shall be placed at the outlet of the fourth impinger, for monitoring purposes.

Alternatively, any system may be used (subject to the approval of the Administrator) that cools the sample gas stream and allows measurement of both the water that has been condensed and the moisture leaving the condenser, each to within 1 ml or 1 g. Acceptable means are to measure the condensed water, either gravimetrically or volumetrically, and to measure the moisture leaving the condenser by: (1) monitoring the temperature and pressure at the exit of the condenser and using Dalton's law of partial pressures, or (2) passing the sample gas stream through a tared silica gel (or equivalent desiccant) trap, with exit gases kept below 20° C (68° F), and determining the weight gain.

If means other than silica gel are used to determine the amount of moisture leaving the condenser, it is recommended that silica gel (or equivalent) still be used between the condenser system and pump, to prevent moisture condensation in the pump and metering devices and to avoid the need to make corrections for moisture in the metered volume.

2.1.3 Cooling System. An ice bath container and crushed ice (or equivalent) are used to aid in condensing moisture.

2.1.4 Metering System. This system includes a vacuum gauge, leak-free pump, thermometers capable of measuring temperature to within 3° C (5.4° F), dry gas meter capable of measuring volume to within 2 percent, and related equipment as shown in Figure 4-1. Other metering systems, capable of maintaining a constant sampling rate and determining sample gas volume, may be used, subject to the approval of the Administrator.

2.1.5 Barometer. Mercury, aneroid, or other barometer capable of measuring atmospheric pressure to within 2.5 mm Hg (0.1 in. Hg) may be used. In many cases, the barometric reading may be obtained from a nearby national weather service station, in which case the station value (which is the absolute barometric pressure) shall be requested and an adjustment for elevation differences between the weather station and the sampling point shall be applied at a rate of minus 2.5 mm Hg (0.1 in. Hg) per 30 m (100 ft) elevation increase or vice versa for elevation decrease.

2.1.6 Graduated Cylinder and/or Balance. These items are used to measure condensed water and moisture caught in the silica gel to within 1 ml or 0.5 g. Graduated cylinders shall have subdivisions no greater than 2 ml. Most laboratory balances are capable of weighing to the nearest 0.5 g or less. These balances are suitable for use here.

2.2 Procedure. The following procedure is written for a condenser system (such as the impinger system described in Section 2.1.2) incorporating volumetric analysis to measure the condensed moisture, and silica gel and gravimetric analysis to measure the moisture leaving the condenser.

2.2.1 Unless otherwise specified by the Administrator, a minimum of eight traverse points shall be used for circular stacks having diameters less than 0.61 m (24 in.), a minimum of nine points shall be used for rectangular stacks having equivalent diameters less than 0.61 m (24 in.), and a minimum of twelve traverse points shall be used in all other cases. The traverse points shall be located according to Method 1. The use of fewer points is subject to the approval of the Administrator. Select a suitable probe and probe length such that all traverse points can be sampled. Consider sampling from opposite sides of the stack (four total sampling ports) for large stacks, to permit use of shorter probe lengths. Mark the probe with heat resistant tape or by some other method to denote the proper distance into the stack or duct for each sampling point. Place known volumes of water in the first two impingers. Weigh and record the

weight of the silica gel to the nearest 0.5 g, and transfer the silica gel to the fourth impinger; alternatively, the silica gel may first be transferred to the impinger, and the weight of the silica gel plus impinger recorded.

2.2.2 Select a total sampling time such that a minimum total gas volume of 0.60 scm (21 scf) will be collected, at a rate no greater than 0.021 m^3/min (0.75 cfm). When both moisture content and pollutant emission rate are to be determined, the moisture determination shall be simultaneous with, and for the same total length of time as, the pollutant emission rate run, unless otherwise specified in an applicable subpart of the standards.

2.2.3 Set up the sampling train as shown in Figure 4-1. Turn on the probe heater and (if applicable) the filter heating system to temperatures of about 120° C (248° F), to prevent water condensation ahead of the condenser; allow time for the temperatures to stabilize. Place crushed ice in the ice bath container. It is recommended, but not required, that a leak check be done, as follows: Disconnect the probe from the first impinger or (if applicable) from the filter holder. Plug the inlet to the first impinger (or filter holder) and pull a 380 mm (15 in.) Hg vacuum; a lower vacuum may be used, provided that it is not exceeded during the test. A leakage rate in excess of 4 percent of the average sampling rate or 0.00057 m^3/min (0.02 cfm), whichever is less, is unacceptable. Following the leak check, reconnect the probe to the sampling train.

2.2.4 During the sampling run, maintain a sampling rate within 10 percent of constant rate, or as specified by the Administrator. For each run, record the data required on the example data sheet shown in Figure 4-2. Be sure to record the dry gas meter reading at the beginning and end of each sampling time increment and whenever sampling is halted. Take other appropriate readings at each sample point, at least once during each time increment.

2.2.5 To begin sampling, position the probe tip at the first traverse point. Immediately start the pump and adjust the flow to the desired rate. Traverse the cross section, sampling at each traverse point for an equal length of time. Add more ice and, if necessary, salt to maintain a temperature of less 20° C (68° F) at the silica gel outlet.

2.2.6 After collecting the sample, disconnect the probe from the filter holder (or from the first impinger) and conduct a leak check (mandatory) as described in Section 2.2.3. Record the leak rate. If the leakage rate exceeds the allowable rate, the tester shall either reject the test results or shall correct the sample volume as in Section 6.3 of Method 5. Next, measure the volume of the moisture condensed to the nearest ml. Determine the increase in weight of the silica gel (or silica gel plus impinger) to the nearest 0.5 g. Record this information (see example data sheet, Figure 4-3) and calculate the moisture percentage, as described in 2.3 below.

2.3 Calculations. Carry out the following calculations, retaining at least one extra decimal figure beyond that of the acquired data. Round off figures after final calculation.

PLANT _____
LOCATION _____
OPERATOR _____
DATE _____
RUN NO. _____
AMBIENT TEMPERATURE _____
BAROMETRIC PRESSURE _____
PROBE LENGTH m(ft) _____

SCHEMATIC OF STACK CROSS SECTION

TRAVERSE POINT NUMBER	SAMPLING TIME (θ), min.	STACK TEMPERATURE °C (°F)	PRESSURE DIFFERENTIAL ACROSS ORIFICE METER (ΔH), mm(in.) H_2O	METER READING GAS SAMPLE VOLUME m^3 (ft^3)	ΔV_m m^3 (ft^3)	GAS SAMPLE TEMPERATURE AT DRY GAS METER		TEMPERATURE OF GAS LEAVING CONDENSER OR LAST IMPINGER, °C (°F)
						INLET (Tm_{in}), °C (°F)	OUTLET (Tm_{out}), °C (°F)	
TOTAL						Avg.	Avg.	
AVERAGE						Avg.		

Figure 4-2. Field moisture determination-reference method.

	IMPINGER VOLUME, ml	SILICA GEL WEIGHT, g
FINAL		
INITIAL		
DIFFERENCE		

Figure 4-3. Analytical data - reference method.

2.3.1 Nomenclature.

B_{ws}=Proportion of water vapor, by volume, in the gas stream.

M_w=Molecular weight of water, 18.0 g/g-mole (18.0 lb/lb-mole).

P_m=Absolute pressure (for this method, same as barometric pressure) at the dry gas meter, mm Hg (in. Hg).

P_{std}=Standard absolute pressure, 760 mm Hg (29.92 in. Hg).

R=Ideal gas constant, 0.06236 (mm Hg) (m^3)/(g-mole) (°K) for metric units and 21.85 (in. Hg) (ft^3)/(lb-mole) (°R) for English units.

T_m=Absolute temperature at meter, °K (°R).

T_{std}=Standard absolute temperature, 293° K (528°R).

V_M=Dry gas volume measured by dry gas meter, dcm (dcf).

ΔV_m=Incremental dry gas volume measured by dry gas meter at each traverse point, dcm (dcf).

$V_{m(std)}$=Dry gas volume measured by the dry gas meter, corrected to standard conditions, dscm (dscf).

$V_{wc(std)}$=Volume of water vapor condensed corrected to standard conditions, scm (scf).

$V_{wsg(std)}$=Volume of water vapor collected in silica gel corrected to standard conditions, scm (scf).

V_f=Final volume of condenser water, ml.

V_i=Initial volume, if any, of condenser water, ml.

W_f=Final weight of silica gel or silica gel plus impinger, g.

W_i=Initial weight of silica gel or silica gel plus impinger, g.

Y=Dry gas meter calibration factor.

ρ_w=Density of water, 0.9982 g/ml (0.002201 lb/ml).

2.3.2 Volume of water vapor condensed.

$$V_{wc\,(std)}=\frac{(V_f-V_i)\rho_w RT_{std}}{P_{std}M_w}=K_1(V_f-V_i)$$

Equation 4-1

where:

K_1=0.001333 m^3/ml for metric units
=0.04707 ft^3/ml for English units

2.3.3 Volume of water vapor collected in silica gel.

$$V_{wsg\,(std)}=\frac{(W_f-W_i)RT_{std}}{P_{std}M_w}=K_2(W_f-W_i)$$

Equation 4-2

where:

K_2=0.001335 m^3/g for metric units
=0.04715 ft^3/g for English units

2.3.4 Sample gas volume.

$$V_{m\,(std)}=V_mY\frac{(P_m)(T_{std})}{(P_{std})(T_m)}=K_3Y\frac{V_mP_m}{T_m}$$

Equation 4-3

where:

K_3=0.3858 °K/mm Hg for metric units
=17.64 °R/in. Hg for English units

NOTE: If the post-test lead rate (Section 2.2.6) exceeds the allowable rate, correct the value of V_m in Equation 4-3, as described in Section 6.3 of Method 5.

2.3.5 Moisture Content.

$$B_{ws}=\frac{V_{wc\,(std)}+V_{wsg\,(std)}}{V_{wc\,(std)}+V_{wsg\,(std)}+V_{m\,(std)}}$$

Equation 4-4

NOTE: In saturated or moisture droplet-laden gas streams, two calculations of the moisture content of the stack gas shall be made, one using a value based upon the saturated conditions (see Section 1.2), and another based upon the results of the impinger analysis. The lower of these two values of B_{ws} shall be considered correct.

2.3.6 Verification of constant sampling rate. For each time increment, determine the ΔV_m. Calculate the average. If the value

for any time increment differs from the average by more than 10 percent, reject the results and repeat the run.

3. *Approximation Method*

The approximation method described below is presented only as a suggested method (see Section 1.2).

3.1 Apparatus.

3.1.1 Probe. Stainless steel glass tubing, sufficiently heated to prevent water condensation and equipped with a filter (either in-stack or heated out-stack) to remove particulate matter. A plug of glass wool, inserted into the end of the probe, is a satisfactory filter.

3.1.2 Impingers. Two midget impingers, each with 30 ml capacity, or equivalent.

3.1.3 Ice Bath. Container and ice, to aid in condensing moisture in impingers.

3.1.4 Drying Tube. Tube packed with new or regenerated 6- to 16-mesh indicating-type silica gel (or equivalent desiccant), to dry the sample gas and to protect the meter and pump.

3.1.5 Valve. Needle valve, to regulate the sample gas flow rate.

3.1.6 Pump. Leak-free, diaphragm type, or equivalent, to pull the gas sample through the train.

3.1.7 Volume Meter. Dry gas meter, sufficiently accurate to measure the sample volume within 2%, and calibrated over the range of flow rates and conditions actually encountered during sampling.

3.1.8 Rate Meter. Rotameter, to measure the flow range from 0 to 3 lpm (0 to 0.11 cfm).

3.1.9 Graduated Cylinder. 25 ml.

3.1.10 Barometer. Mercury, aneroid, or other barometer, as described in Section 2.1.5 above.

3.1.11 Vacuum Gauge. At least 760 mm Hg (30 in. Hg) gauge, to be used for the sampling leak check.

3.2 Procedure.

3.2.1 Place exactly 5 ml distilled water in each impinger.

Leak check the sampling train as follows: Temporarily insert a vacuum gauge at or near the probe inlet; then, plug the probe inlet and pull a vacuum of at least 250 mm Hg (10 in. Hg). Note; the time rate of change of the dry gas meter dial; alternatively, a rotameter (0-40 cc/min) may be temporarily attached to the dry gas meter outlet to determine the leakage rate. A leak rate not in excess of 2 percent of the average sampling rate is acceptable.

NOTE: Carefully release the probe inlet plug before turning off the pump.

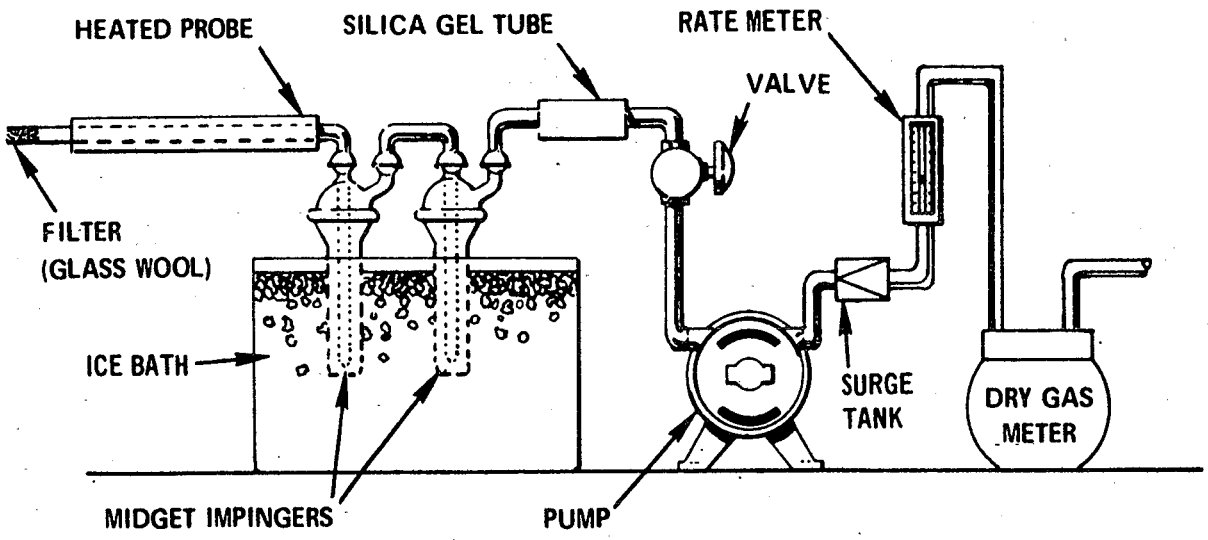

Figure 4-4. Moisture-sampling train - approximation method.

LOCATION _____ COMMENTS

TEST _____

DATE _____

OPERATOR _____

BAROMETRIC PRESSURE _____

CLOCK TIME	GAS VOLUME THROUGH METER, (Vm), m^3 (ft^3)	RATE METER SETTING m^3/min. (ft^3/min.)	METER TEMPERATURE, °C (°F)

Figure 4-5. Field moisture determination - approximation method.

Figure 4-5. Field moisture determination—approximation method.

3.2.2 Connect the probe, insert it into the stack, and sample at a constant rate of 2 lpm (0.071 cfm). Continue sampling until the dry gas meter registers about 30 liters (1.1 ft³) or until visible liquid droplets are carried over from the first impinger to the second. Record temperature, pressure, and dry gas meter readings as required by Figure 4-5.

3.2.3 After collecting the sample, combine the contents of the two impingers and measure the volume to the nearest 0.5 ml.

3.3 Calculations. The calculation method presented is designed to estimate the moisture in the stack gas; therefore, other data, which are only necessary for accurate moisture determinations, are not collected. The following equations adequately estimate the moisture content, for the purpose of determining isokinetic sampling rate settings.

3.3.1 Nomenclature.

B_{wm}=Approximate proportion, by volume, of water vapor in the gas stream leaving the second impinger, 0.025.

B_{ws}=Water vapor in the gas stream, proportion by volume.

M_w=Molecular weight of water, 18.0 g/g-mole (18.0 lb/lb-mole).

P_m=Absolute pressure (for this method, same as barometric pressure) at the dry gas meter.

P_{std}=Standard absolute pressure, 760 mm Hg (29.92 in. Hg).

R=Ideal gas constant, 0.06236 (mm Hg) (m³)/(g-mole) (°K) for metric units and 21.85 (in. Hg) (ft³)/lb-mole) (°R) for English units.

T_m=Absolute temperature at meter, °K (°R).

T_{std}=Standard absolute temperature, 293° K (528° R).

V_f=Final volume of impinger contents, ml.

V_i=Initial volume of impinger contents, ml.

V_m=Dry gas volume measured by dry gas meter, dcm (def).

$V_{m(std)}$=Dry gas volume measured by dry gas meter, corrected to standard conditions, dscm (dscf).

$V_{wc(std)}$=Volume of water vapor condensed, corrected to standard conditions, scm (scf).

ρ_w=Density of water, 0.9982 g/ml (0.002201 lb/ml).

Y=Dry gas meter calibration factor.

3.3.2 Volume of water vapor collected.
where:

$$V_{wc}=\frac{(V_f-V_i)\rho_w RT_{std}}{P_{std}M_w}$$
$$=K_1(V_f-V_i)$$

Equation 4-5

K_1=0.001333 m³/ml for metric units
=0.04707 ft³/ml for English units.

3.3.3 Gas volume.

$$V_{m(std)}=V_m\left(\frac{P_m}{P_{std}}\right)\left(\frac{T_{std}}{T_m}\right)$$
$$=K_2\frac{V_mP_m}{T_m}$$

Equation 4-6

where:
K_2=0.3858 °K/mm Hg for metric units
=17.64 °R/in. Hg for English units

3.3.4 Approximate moisture content.

$$B_{ws}=\frac{V_{wc}}{V_{wc}+V_{m(std)}}+B_{wm}$$
$$=\frac{V_{wc}}{V_{wc}+V_{m(std)}}+(0.025)$$

Equation 4-7

4. *Calibration*

4.1 For the reference method, calibrate equipment as specified in the following sections of Method 5: Section 5.3 (metering system); Section 5.5 (temperature gauges); and Section 5.7 (barometer). The recommended leak check of the metering system (Section 5.6 of Method 5) also applies to the reference method. For the approximation method, use the procedures outlined in Section 5.1.1 of Method 6 to calibrate the metering system, and the procedure of Method 5, Section 5.7 to calibrate the barometer.

5. *Bibliography*

1. Air Pollution Engineering Manual (Second Edition). Danielson, J. A. (ed.). U.S. Environmental Protection Agency, Office of Air Quality Planning and Standards. Research Triangle Park, N.C. Publication No. AP-40. 1973.

2. Devorkin, Howard. et al. Air Pollution Source Testing Manual. Air Pollution Control District, Los Angeles, Calif. November, 1963.

3. Methods for Determination of Velocity, Volume Dust and Mist Content of Gases. Western Precipitation Division of Joy Man-

ufacturing Co., Los Angeles, Calif. Bulletin WP-50. 1968.

METHOD 5—DETERMINATION OF PARTICULATE EMISSIONS FROM STATIONARY SOURCES

1. *Principle and Applicability*

1.1 Principle. Particulate matter is withdrawn isokinetically from the source and collected on a glass fiber filter maintained at a temperature in the range of 120±14° C (248±25° F) or such other temperature as specified by an applicable subpart of the standards or approved by Administrator, U.S. Environmental Protection Agency, for a particular application. The particulate mass, which includes any material that condenses at or above the filtration temperature, is determined gravimetrically after removal of uncombined water.

1.2 Applicability. This method is applicable for the determination of particulate emissions from stationary sources.

2. *Apparatus*

2.1 Sampling Train. A schematic of the sampling train used in this method is shown in Figure 5-1. Complete construction details are given in APTD-0581 (Citation 2 in Section 7); commercial models of this train are also available. For changes from APTD-0581 and for allowable modifications of the train shown in Figure 5-1, see the following subsections.

The operating and maintenance procedures for the sampling train are described in APTD-0576 (Citation 3 in Section 7). Since correct usage is important in obtaining valid results, all users should read APTD-0576 and adopt the operating and maintenance procedures outlined in it, unless otherwise specified herein. The sampling train consists of the following components:

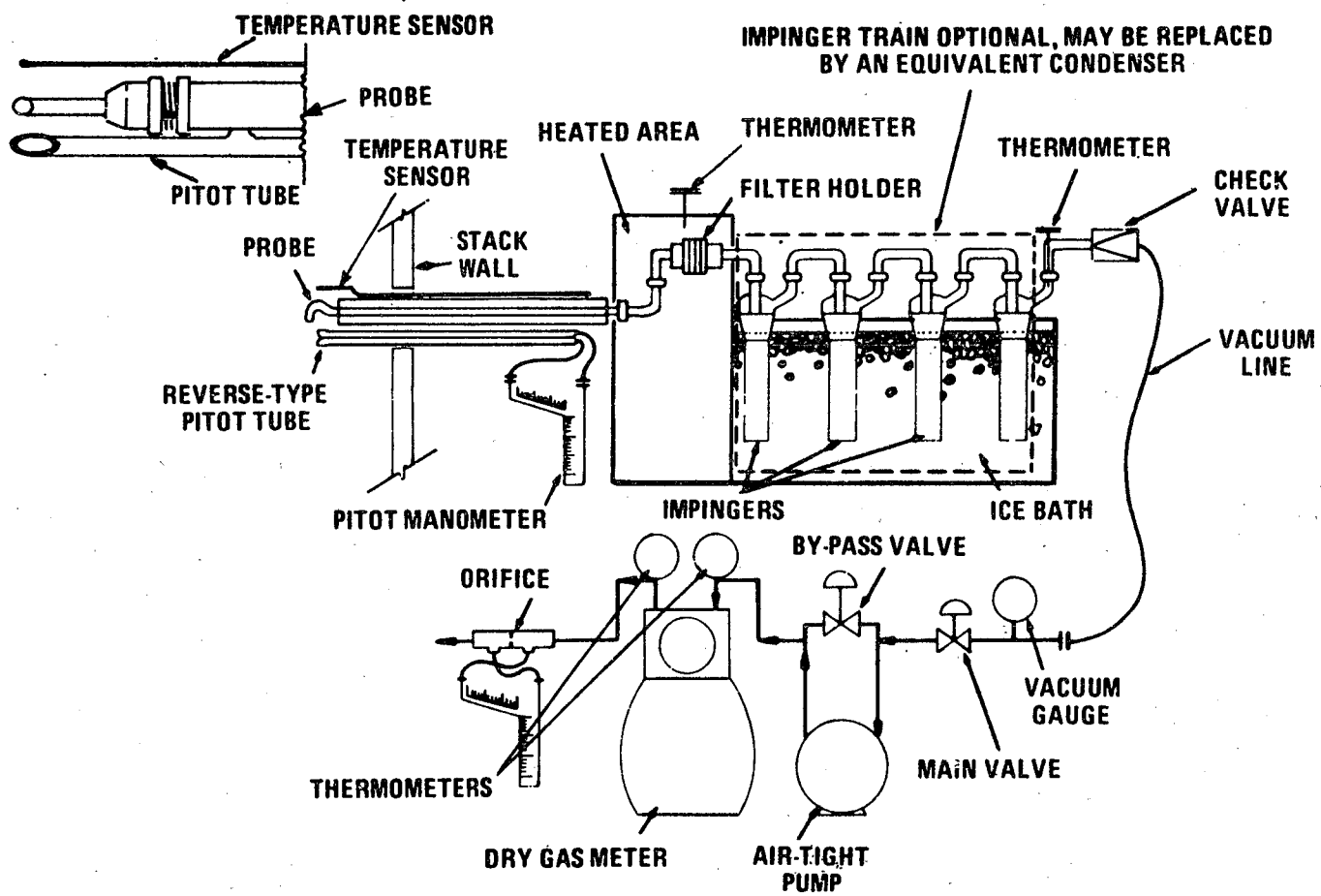

Figure 5-1. Particulate-sampling train

2.1.1 Probe Nozzle. Stainless steel (316) or glass with sharp, tapered leading edge. The angle of taper shall be 30° and the taper shall be on the outside to preserve a constant internal diameter. The probe nozzle shall be of the button-hook or elbow design, unless otherwise specified by the Administrator. If made of stainless steel, the nozzle shall be constructed from seamless tubing; other materials of construction may be used, subject to the approval of the Administrator.

A range of nozzle sizes suitable for isokinetic sampling should be available, e.g., 0.32 to 1.27 cm (⅛ to ½ in.)—or larger if higher volume sampling trains are used—inside diameter (ID) nozzles in increments of 0.16 cm (1/16 in.). Each nozzle shall be calibrated according to the procedures outlined in Section 5.

2.1.2 Probe Liner. Borosilicate or quartz glass tubing with a heating system capable of maintaining a gas temperature at the exit end during sampling of 120±14° C (248±25° F), or such other temperature as specified by an applicable subpart of the standards or approved by the Administrator for a particular application. (The tester may opt to operate the equipment at a temperature lower than that specified.) Since the actual temperature at the outlet of the probe is not usually monitored during sampling, probes constructed according to APTD-0581 and utilizing the calibration curves of APTD-0576 (or calibrated according to the procedure outlined in APTD-0576) will be considered acceptable.

Either borosilicate or quartz glass probe liners may be used for stack temperatures up to about 480° C (900° F) quartz liners shall be used for temperatures between 480 and 900° C (900 and 1,650° F). Both types of liners may be used at higher temperatures than specified for short periods of time, subject to the approval of the Administrator. The softening temperature for borosilicate is 820° C (1,508° F), and for quartz it is 1,500° C (2,732° F).

Whenever practical, every effort should be made to use borosilicate or quartz glass probe liners. Alternatively, metal liners (e.g., 316 stainless steel, Incoloy 825,[2] or other corrosion resistant metals) made of seamless tubing may be used, subject to the approval of the Administrator.

2.1.3 Pitot Tube. Type S, as described in Section 2.1 of Method 2, or other device approved by the Administrator. The pitot tube shall be attached to the probe (as shown in Figure 5-1) to allow constant monitoring of the stack gas velocity. The impact (high pressure) opening plane of the pitot tube shall be even with or above the nozzle entry plane (see Method 2, Figure 2-6b) during sampling. The Type S pitot tube assembly shall have a known coefficient, determined as outlined in Section 4 of Method 2.

2.1.4 Differentia Pressure Gauge. Inclined manometer or equivalent device (two), as described in Section 2.2 of Method 2. One manometer shall be used or velocity head (Δp) readings, and the other, for orifice differentia pressure readings.

2.1.5 Filter Holder. Borosilicate glass, with a glass frit filter support and a silicone rubber gasket. Other materials of construction (e.g., stainless steel, Teflon, Viton) may be used, subject to approval of the Administrator. The holder design shall provide a positive seal against leakage from the outside or around the filter. The holder shall be attached immediately at the outlet of the probe (or cyclone, it used).

2.1.6 Filter Heating System. Any heating system capable of maintaining a temperature around the filter holder during sampling of 120±14° C (248±25° F), or such other temperature as specified by an applicable subpart of the standards or approved by the Administrator for a particular application. Alternatively, the tester may opt to operate the equipment at a temperature lower than that specified. A temperature gauge capable of measuring temperature to within 3° C (5.4° F) shall be installed so that the temperature around the filter holder can be regulated and monitored during sampling. Heating systems other than the one shown in APTD-0581 may be used.

2.1.7 Condenser. The following system shall be used to determine the stack gas moisture content: Four impingers connected in series with leak-free ground glass fittings or any similar leak-free non-contaminating fittings. The first, third, and fourth impingers shall be of the Greenburg-Smith design, modified by replacing the tip with 1.3 cm (½ in.) ID glass tube extending to about 1.3 cm (½ in.) from the bottom of the flask. The second impinger shall be of the Greenburg-Smith design with the standard tip. Modifications (e.g., using flexible connections between the impingers, using materials other than glass, or using flexible vacuum lines to connect the filter holder to the condenser) may be used, subject to the approval of the Administrator. The first and second impingers shall contain known quantities of water (Section 4.1.3), the third shall be empty, and the fourth shall contain a known weight of silica gel, or equivalent desiccant. A thermometer, capable of measuring temperture to within 1° C (2° F) shall be placed at the outlet of the fourth impinger for monitoring purposes.

Alternatively, any system that cools the sample gas stream and allows measurement of the water condensed and moisture leav-

[2]Mention of trade names or specific product does not constitute endorsement by the Environmental Protection Agency.

ing the condenser, each to within 1 ml or 1 g may be used, subject to the approval of the Administrator. Acceptable means are to measure the condensed water either gravimetrically or volumetrically and to measure the moisture leaving the condenser by: (1) monitoring the temperature and pressure at the exit of the condenser and using Dalton's law of partial pressures; or (2) passing the sample has stream through a tared silica gel (or equivalent desiccant) trap with exit gases kept below 20° C (68° F) and determining the weight gain.

If means other than silica gel are used to determine the amount of moisture leaving the condenser, it is recommended that silica gel (or equivalent) still be used between the condenser system and pump to prevent moisture condensation in the pump and metering devices and to avoid the need to make corrections for moisture in the metered volume.

NOTE: If a determination of the particulate matter collected in the impingers is desired in addition to moisture content, the impinger system described above shall be used, without modification. Individual States or control agencies requiring this information shall be contacted as to the sample recovery and analysis of the impinger contents.

2.1.8 Metering System. Vacuum gauge, leak-free pump, thermometers capable of measuring temperature to within 3° C (5.4° F), dry gas meter capable of measuring volume to within 2 percent, and related equipment, as shown in Figure 5-1. Other metering systems capable of maintaining sampling rates within 10 percent of isokinetic and of determining sample volumes to within 2 percent may be used, subject to the approval of the Administrator. When the metering system is used in conjunction with a pitot tube, the system shall enable checks of isokinetic rates.

Sampling trains utilizing metering systems designed for higher flow rates than that decribed in APTD-0581 or APDT-0576 may be used provided that the specifications of this method are met.

2.1.9 Barometer. Mercury aneroid, or other barometer capable of measuring atmospheric pressure to within 2.5 mm Hg (0.1 in. Hg). In many cases the barometric reading may be obtained from a nearby national weather service station, in which case the station value (which is the absolute barometric pressure) shall be requested and an adjustment for elevation differences between the weather station and sampling point shall be applied at a rate of minus 2.5 mm Hg (0.1 in. Hg) per 30 m (100 ft) elevation increase or vice versa for elevation decrease.

2.1.10 Gas Density Determination Equipment. Temperature sensor and pressure gauge, as described in Sections 2.3 and 2.4 of Method 2, and gas analyzer, if necessary, as described in Method 3. The temperature sensor shall, preferably, be permanently attached to the pitot tube or sampling probe in a fixed configuration, such that the tip of the sensor extends beyond the leading edge of the probe sheath and does not touch any metal. Alternatively, the sensor may be attached just prior to use in the field. Note, however, that if the temperature sensor is attached in the field, the sensor must be placed in an interference-free arrangement with respect to the Type S pitot tube openings (see Method 2, Figure 2-7). As a second alternative, if a difference of not more than 1 percent in the average velocity measurement is to be introduced, the temperature gauge need not be attached to the probe or pitot tube. (This alternative is subject to the approval of the Administrator.)

2.2 Sample Recovery. The following items are needed.

2.2.1 Probe-Liner and Probe-Nozzle Brushes. Nylon bristle brushes with stainless steel wire handles. The probe brush shall have extensions (at least as long as the probe) of stainless steel, Nylon, Teflon, or similarly inert material. The brushes shall be properly sized and shaped to brush out the probe liner and nozzle.

2.2.2 Wash Bottles—Two. Glass wash bottles are recommended; polyethylene wash bottles may be used at the option of the tester. It is recommended that acetone not be stored in polyethylene bottles for longer than a month.

2.2.3 Glass Sample Storage Containers. Chemically resistant, borosilicate glass bottles, for acetone washes, 500 ml or 1000 ml. Screw cap liners shall either be rubber-backed Teflon or shall be constructed so as to be leak-free and resistant to chemical attack by acetone. (Narrow mouth glass bottles have been found to be less prone to leakage.) Alternatively, polyethylene bottles may be used.

2.2.4 Petri Dishes. For filter samples, glass or polyethylene, unless otherwise specified by the Administrator.

2.2.5 Graduated Cylinder and/or Balance. To measure condensed water to within 1 ml or 1 g. Graduated cylinders shall have subdivisions no greater than 2 ml. Most laboratory balances are capable of weighing to the nearest 0.5 g or less. Any of these balances is suitable or use here and in Section 2.3.4.

2.2.6 Plastic Storage Containers. Airtight containers to store silica gel.

2.2.7 Funnel and Rubber Policeman. To aid in transfer of silica gel to container; not necessary if silica gel is weighed in the field.

2.2.8 Funnel. Glass or polyethylene, to aid in sample recovery.

2.2 Analysis. For analysis, the following equipment is needed.

2.3.1 Glass Weighing Dishes.

2.3.2 Desiccator.

2.3.3 Analytical Balance. To measure to within 0.1 mg.

2.3.4 Balance. To measure to within 0.5 g.

2.3.5 Beakers. 250 ml.

2.3.6 Hygrometer. To measure the relative humidity of the laboratory environment.

2.3.7 Temperature Gauge. To measure the temperature of the laboratory environment.

3. *Reagents*

3.1 Sampling. The reagents used in sampling are as follows:

3.1.1 Filters. Glass fiber filters, without organic binder, exhibiting at least 99.95 percent efficiency (<0.05 percent penetration) on 0.3-micron dioctyl phthalate smoke particles. The filter efficiency test shall be conducted in accordance with ASTM standard method D 2986-71. Test data from the supplier's quality control program are sufficient for this purpose. In sources containing SO_2 or SO_3, the filter material must be of a type that is unreactive to SO_2 or SO_3. Citation 10 in Section 7 may be used to select the appropriate filter.

3.1.2 Silica Gel. Indicating type, 6 to 16 mesh. If previously used, dry at 175° C (350° F) for 2 hours. New silica gel may be used as received. Alternatively, other types of desiccants (equivalent or better) may be used, subject to the approval of the Administrator.

3.1.3 Water. When analysis of the material caught in the impingers is required, distilled water shall be used. Run blanks prior to field use to eliminate a high blank on test samples.

3.1.4 Crushed Ice.

3.1.5 Stopcock Grease. Acetone-insoluble, heat-stable silicone grease. This is not necessary if screw-on connectors with Teflon sleeves, or similar, are used. Alternatively, other types of stopcock grease may be used, subject to the approval of the Administrator.

3.2 Sample Recovery. Acetone-reagent grade, <0.001 percent residue, in glass bottles—is required. Acetone from metal containers generally has a high residue blank and should not be used. Sometimes, suppliers transfer acetone to glass bottles from metal containers; thus, acetone blanks shall be run prior to field use and only acetone with low blank values (<0.001 percent) shall be used. In no case shall a blank value of greater than 0.001 percent of the weight of acetone used be subtracted from the sample weight.

3.3 Analysis. Two reagents are required for the analysis:

3.3.1 Acetone. Same as 3.2.

3.3.2 Desiccant. Anhydrous calcium sulfate, indicating type. Alternatively, other types of desiccants may be used, subject to the approval of the Administrator.

4. *Procedure*

4.1 Sampling. The complexity of this method is such that, in order to obtain reliable results, testers should be trained and experienced with the test procedures.

4.1.1 Pretest Preparation. All the components shall be maintained and calibrated according to the procedure described in APTD-0576, unless otherwise specified herein.

Weigh several 200 to 300 g portions of silica gel in air-tight containers to the nearest 0.5 g. Record the total weight of the silica gel plus container, on each container. As an alternative, the silica gel need not be preweighed, but may be weighed directly in the impinger or sampling holder just prior to train assembly.

Check filters visually against light for irregularities and flaws or pinhole leaks. Label filters of the proper diameter on the back side near the edge using numbering machine ink. As an alternative, label the shipping containers (glass or plastic petri dishes) and keep the filters in these containers at all times except during sampling and weighing.

Desiccate the filters at 20±5.6° C (68±10° F) and ambient pressure for at least 24 hours and weigh at intervals of at least 6 hours to a constant weight, i.e., 0.5 mg change from previous weighing; record results to the nearest 0.1 mg. During each weighing the filter must not be exposed to the laboratory atmosphere for a period greater than 2 minutes and a relative humidity above 50 percent. Alternatively (unless otherwise specified by the Administrator), the filters may be oven dried at 105° C (220° F) for 2 to 3 hours, desiccated for 2 hours, and weighed. Procedures other than those described, which account for relative humidity effects, may be used, subject to the approval of the Administrator.

4.1.2 Preliminary Determinations. Select the sampling site and the minimum number of sampling points according to Method 1 or as specified by the Administrator. Determine the stack pressure, temperature, and the range of velocity heads using Method 2; it is recommended that a leak-check of the pitot lines (see Method 2, Section 3.1) be performed. Determine the moisture content using Approximation Method 4 or its alternatives for the purpose of making isokinetic sampling rate settings. Determine the stack gas dry molecular weight, as described in Method 2, Section 3.6; if integrated Method 3 sampling is used for molecular weight determination, the integrated bag sample shall be taken simultaneously with, and for

the same total length of time as, the particulate sample run.

Select a nozzle size based on the range of velocity heads, such that it is not necessary to change the nozzle size in order to maintain isokinetic sampling rates. During the run, do not change the nozzle size. Ensure that the proper differental pressure gauge is chosen for the range of velocity heads encountered (see Section 2.2 of Method 2).

Select a suitable probe liner and probe length such that all traverse points can be sampled. For large stacks, consider sampling from opposite sides of the stack to reduce the length of probes.

Select a total sampling time greater than or equal to the minimum total sampling time specified in the test procedures for the specific industry such that (1) the sampling time per point is not less than 2 min (or some greater time interval as specified by the Administrator), and (2) the sample volume taken (corrected to standard conditions) will exceed the required minimum total gas sample volume. The latter is based on an approximate average sampling rate.

It is recommended that the number of minutes sampled at each point be an integer or an integer plus one-half minute, in order to avoid timekeeping errors. The sampling time at each point shall be the same.

In some cirumstances, e.g., batch cycles, it may be necessary to sample for shorter times at the traverse points and to obtain smaller gas sample volumes. In these cases, the Administrator's approval must first be obtained.

4.1.3 Preparation of Collection Train. During preparation and assembly of the sampling train, keep all openings where contamination can occur covered until just prior to assembly or until sampling is about to begin.

Place 100 ml of water in each of the first two impingers, leave the third impinger empty, and transfer approximately 200 to 300 g of preweighed silica gel from its container to the fourth impinger. More silica gel may be used, but care should be taken to ensure that it is not entrained and carried out from the impinger during sampling. Place the container in a clean place for later use in the sample recovery. Alternatively, the weight of the silica gel plus impinger may be determined to the nearest 0.5 g and recorded.

Using a tweezer or clean disposable surgical gloves, place a labeled (identified) and weighed filter in the filter holder. Be sure that the filter is property centered and the gasket properly placed so as to prevent the sample gas stream from circumventing the filter. Check the filter for tears after assembly is completed.

When glass liners are used, install the selected nozzle using a Viton A O-ring when stack temperatures are less than 260° C (500° F) and an asbestos string gasket when temperatures are higher. See APTD-0576 for details. Other connecting systems using either 316 stainless steel or Teflon ferrules may be used. When metal liners are used, install the nozzle as above or by a leak-free direct mechanical connection. Mark the probe with heat resistant tape or by some other method to denote the proper distance into the stack or duct for each sampling point.

Set up the train as in Figure 5-1, using (if necessary) a very light coat of silicone grease on all ground glass joints, greasing only the outer portion (see APTD-0576) to avoid possibility of contamination by the silicone grease. Subject to the approval of the Administrator, a glass cyclone may be used between the probe and filter holder when the total particulate catch is expected to exceed 100 mg or when water droplets are present in the stack gas.

Place crushed ice around the impingers.

4.1.4 Leak-Check Procedures.

4.1.4.1 Pretest Leak-Check. A pretest leak-check is recommended, but not required. If the tester opts to conduct the pretest leak-check, the following procedure shall be used.

After the sampling train has been assembled, turn on and set the filter and probe heating systems at the desired operating temperatures. Allow time for the temperatures to stabilize. If a Viton A O-ring or other leak-free connection is used in assembling the probe nozzle to the probe liner, leak-check the train at the sampling site by plugging the nozzle and pulling a 380 mm Hg (15 in. Hg) vacuum.

NOTE: A lower vacuum may be used, provided that it is not exceeded during the test.

If an asbestos string is used, do not connect the probe to the train during the leak-check. Instead, leak-check the train by first plugging the inlet to the filter holder (cycone, if applicable) and pulling a 380 mm Hg (15 in. Hg) vacuum (see Note immediately above). Then connect the probe to the train and leak-check at about 25 mm Hg (1 in. Hg) vacuum; alternatively, the probe may be leak-checked with the rest of the sampling train, in one step, at 380 mm Hg (15 in. Hg) vacuum. Leakage rates in excess of 4 percent of the average sampling rate or 0.00057 m^3/min (0.02 cfm), whichever is less, are unacceptable.

The following leak-check instructions for the sampling train described in APTD-0576 and APTD-0581 may be helpful. Start the pump with bypass valve fully open and coarse adjust valve, completely closed. Partially open the coarse adjust valve and slowly close the bypass valve until the desired vacuum is reached. Do not reverse direction of bypass value; this will cause water

to back up into the filter holder. If the desired vacuum is exceeded, either leak-check at this higher vacuum or end the leak-check as shown below and start over.

When the leak-check is completed, first slowly remove the plug from the inlet to the probe, filter holder, or cyclone (if applicable) and immediately turn off the vacuum pump. This prevents the water in the impingers from being forced backward into the filter holder and silica get from being entrained backward into the third impinger.

4.1.4.2 Leak-Checks During Sample Run. If, during the sampling run, a component (e.g., filter assembly or impinger) change becomes unecessary, a leak-check shall be conducted immediately before the change is made. The leak-check shall be done according to the procedure outlined in Section 4.1.4.1 above, except that it shall be done at a vacuum equal to or greater than the maximum value recorded up to that point in the test. If the leakage rate is found to be no greater than 0.00057 m^3/min (0.02 cfm) or 4 percent of the average sampling rate (whichever is less), the results are acceptable, and no correction will need to be applied to the total volume of dry gas metered; if, however, a higher leakage rate is obtained, the tester shall either record the leakage rate and plan to correct the sample volume as shown in Section 6.3 of this method, or shall void the sampling run.

Immediately after component changes, leak-checks are optional; if such leak-checks are done, the procedure outlined in Section 4.1.4.1 above shall be used.

4.1.4.3 Post-test Leak-Check. A leakcheck is mandatory at the conclusion of each sampling run. The leakcheck shall be done in accordance with the procedures outlined in Section 4.1.4.1, except that it shall be conducted at a vacuum equal to or greater than the maximum value reached during the sampling run. If the leakage rate is found to be no greater than 0.00057 m^3/min (0.02 cfm) or 4 percent of the average sampling rate (whichever is less), the results are acceptable, and no correction need be applied to the total volume of dry gas metered. If, however, a higher leakage rate is obtained, the tester shall either record the leakage rate and correct the sample volume as shown in Section 6.3 of this method, or shall void the sampling run.

4.1.5 Particulate Train Operation. During the sampling run, maintain an isokinetic sampling rate (within 10 percent of true isokinetic unless otherwise specified by the Administrator) and a temperature around the filter of 120±14° C (248±25° F), or such other temperature as specified by an applicable subpart of the standards or approved by the Administrator.

For each run, record the data required on a data sheet such as the one shown in Figure 5-2. Be sure to record the initial dry gas meter reading. Record the dry gas meter readings at the beginning and end of each sampling time increment, when changes in flow rates are made, before and after each leak-check, and when sampling is halted. Take other readings required by Figure 5-2 at least once at each sample point during each time increment and additional readings when significant changes (20 percent variation in velocity head readings) necessitate additional adjustments in flow rate. Level and zero the manometer. Because the manometer level and zero may drift due to vibrations and temperature changes, make periodic checks during the traverse.

Clean the portholes prior to the test run to minimize the chance of sampling deposited material. To begin sampling, remove the nozzle cap, verify that the filter and probe heating systems are up to temperature, and that the pitot tube and probe are properly positioned. Position the nozzle at the first traverse point with the tip pointing directly into the gas stream. Immediately start the pump and adjust the flow to isokinetic conditions. Nomographs are available, which aid in the rapid adjustment of the isokinetic sampling rate without excessive computations. These nomographs are designed for use when the Type S pitot tube coefficient is 0.85±0.02, and the stack gas equivalent density (dry molecular weight) is equal to 29±4. APTD-0576 details the procedure for using the nomographs. If C_p and M_d are outside the above stated ranges do not use the nomographs unless appropriate steps (see Citation 7 in Section 7) are taken to compensate for the deviations.

PLANT _____
LOCATION _____
OPERATOR _____
DATE _____
RUN NO. _____
SAMPLE BOX NO. _____
METER BOX NO. _____
METER $\Delta H@$ _____
C FACTOR _____
PITOT TUBE COEFFICIENT, C_p _____

SCHEMATIC OF STACK CROSS SECTION

AMBIENT TEMPERATURE _____
BAROMETRIC PRESSURE _____
ASSUMED MOISTURE, % _____
PROBE LENGTH, m (ft) _____
NOZZLE IDENTIFICATION NO. _____
AVERAGE CALIBRATED NOZZLE DIAMETER, cm (in.) _____
PROBE HEATER SETTING _____
LEAK RATE, m^3/min. (cfm) _____
PROBE LINER MATERIAL _____
STATIC PRESSURE, mm Hg (in. Hg) _____
FILTER NO. _____

TRAVERSE POINT NUMBER	SAMPLING TIME (θ), min.	VACUUM mm Hg (in. Hg)	STACK TEMPERATURE (T_S) °C (°F)	VELOCITY HEAD (ΔP_S), mm(in.)H_2O	PRESSURE DIFFERENTIAL ACROSS ORIFICE METER mm H_2O (in. H_2O)	GAS SAMPLE VOLUME m^3 (ft^3)	GAS SAMPLE TEMPERATURE AT DRY GAS METER		FILTER HOLDER TEMPERATURE, °C (°F)	TEMPERATURE OF GAS LEAVING CONDENSER OR LAST IMPINGER, °C (°F)
							INLET °C (°F)	OUTLET °C (°F)		
TOTAL							Avg.	Avg.		
AVERAGE							Avg.			

Figure 5-2. Particulate field data.

When the stack is under significant negative pressure (height of impinger stem), take care to close the coarse adjust valve before inserting the probe into the stack to prevent water from backing into the filter holder. If necessary, the pump may be turned on with the coarse adjust valve closed.

When the probe is in position, block off the openings around the probe and porthole to prevent unrepresentative dilution of the gas stream.

Traverse the stack cross-section, as required by Method 1 or as specified by the Administrator, being careful not to bump the probe nozzle into the stack walls when sampling near the walls or when removing or inserting the probe through the portholes; this minimizes the chance of extracting deposited material.

During the test run, make periodic adjustments to keep the temperature around the filter holder at the proper level; add more ice and, if necessary, salt to maintain a temperature of less than 20° C (68° F) at the condenser/silica gel outlet. Also, periodically check the level and zero of the manometer.

If the pressure drop across the filter becomes too high, making isokinetic sampling difficult to maintain, the filter may be replaced in the midst of a sample run. It is recommended that another complete filter assembly be used rather than attempting to change the filter itself. Before a new filter assembly is installed, conduct a leak-check (see Section 4.1.4.2). The total particulate weight shall include the summation of all filter assembly catches.

A single train shall be used for the entire sample run, except in cases where simultaneous sampling is required in two or more separate ducts or at two or more different locations within the same duct, or, in cases where equipment failure necessitates a change of trains. In all other situations, the use of two or more trains will be subject to the approval of the Administrator.

Note that when two or more trains are used, separate analyses of the front-half and (if applicable) impinger catches from each train shall be performed, unless identical nozzle sizes were used on all trains, in which case, the front-half catches from the individual trains may be combined (as may the impinger catches) and one analysis of front-half catch and one analysis of impinger catch may be performed. Consult with the Administrator for details concerning the calculation of results when two or more trains are used.

At the end of the sample run, turn off the coarse adjust valve, remove the probe and nozzle from the stack, turn off the pump, record the final dry gas meter reading, and conduct a post-test leak-check, as outlined in Section 4.1.4.3. Also, leak-check the pitot lines as described in Method 2, Section 3.1; the lines must pass this leak-check, in order to validate the velocity head data.

4.1.6 Calculation of Percent Isokinetic. Calculate percent isokinetic (see Calculations, Section 6) to determine whether the run was valid or another test run should be made. If there was difficulty in maintaining isokinetic rates due to source conditions, consult with the Administrator for possible variance on the isokinetic rates.

4.2 Sample Recovery. Proper cleanup procedure begins as soon as the probe is removed from the stack at the end of the sampling period. Allow the probe to cool.

When the probe can be safely handled, wipe off all external particulate matter near the tip of the probe nozzle and place a cap over it to prevent losing or gaining particulate matter. Do not cap off the probe tip tightly while the sampling train is cooling down as this would create a vacuum in the filter holder, thus drawing water from the impingers into the filter holder.

Before moving the sample train to the cleanup site, remove the probe from the sample train, wipe off the silicone grease, and cap the open outlet of the probe. Be careful not to lose any condensate that might be present. Wipe off the silicone grease from the filter inlet where the probe was fastened and cap it. Remove the umbilical cord from the last impinger and cap the impinger. If a flexible line is used between the first impinger or condenser and the filter holder, disconnect the line at the filter holder and let any condensed water or liquid drain into the impingers or condenser. After wiping off the silicone grease, cap off the filter holder outlet and impinger inlet. Either ground-glass stoppers, plastic caps, or serum caps may be used to close these openings.

Transfer the probe and filter-impinger assembly to the cleanup area. This area should be clean and protected from the wind so that the chances of contaminating or losing the sample will be minimized.

Save a portion of the acetone used for cleanup as a blank. Take 200 ml of this acetone directly from the wash bottle being used and place it in a glass sample container labeled "acetone blank."

Inspect the train prior to and during disassembly and note any abnormal conditions. Treat the samples as follows:

Container No. 1. Carefully remove the filter from the filter holder and place it in its identified petri dish container. Use a pair of tweezers and/or clean disposable surgical gloves to handle the filter. If it is necessary to fold the filter, do so such that the particulate cake is inside the fold. Carefully transfer to the petri dish any particulate matter and/or filter fibers which adhere to the filter holder gasket, by using a dry Nylon

bristle brush and/or a sharp-edged blade. Seal the container.

Container No. 2. Taking care to see that dust on the outside of the probe or other exterior surfaces does not get into the sample, quantitatively recover particulate matter or any condensate from the probe nozzle, probe fitting, probe liner, and front half of the filter holder by washing these components with acetone and placing the wash in a glass container. Distilled water may be used instead of acetone when approved by the Administrator and shall be used when specified by the Administrator; in these cases, save a water blank and follow the Administrator's directions on analysis. Perform the acetone rinses as follows:

Carefully remove the probe nozzle and clean the inside surface by rinsing with acetone from a wash bottle and brushing with a Nylon bristle brush. Brush until the acetone rinse shows no visible particles, after which make a final rinse of the inside surface with acetone.

Brush and rinse the inside parts of the Swagelok fitting with acetone in a similar way until no visible particles remain.

Rinse the probe liner with acetone by tilting and rotating the probe while squirting acetone into its upper end so that all inside surfaces will be wetted with acetone. Let the acetone drain from the lower end into the sample container. A funnel (glass or polyethylene) may be used to aid on transferring liquid washes to the container. Follow the acetone rinse with a probe brush. Hold the probe in an inclined position, squirt acetone into the upper end as the probe brush is being pushed with a twisting action through the probe; hold a sample container underneath the lower end of the probe, and catch any acetone and particulate matter which is brushed from the probe. Run the brush through the probe three times or more until no visible particulate matter is carried out with the acetone or until none remains in the probe liner on visual inspection. With stainless steel or other metal probes, run the brush through in the above prescribed manner at least six times since metal probes have small crevices in which particulate matter can be entrapped. Rinse the brush with acetone, and quantitatively collect these washings in the sample container. After the brushing, make a final acetone rinse of the probe as described above.

It is recommended that two people be used to clean the probe to minimize sample losses. Between sampling runs, keep brushes clean and protected from contaminations.

After ensuring that all joints have been wiped clean of silicone grease, clean the inside of the front half of the filter holder by rubbing the surfaces with a Nylon bristle brush and rinsing with acetone. Rinse each surface three times or more if needed to remove visible particulate. Make a final rinse of the brush and filter holder. Carefully rinse out the glass cyclone, also (if applicable). After all acetone washings and particulate matter have been collected in the sample container, tighten the lid on the sample container so that acetone will not leak out when it is shipped to the laboratory. Mark the height of the fluid levcel to determine whether or not leakage occured during transport. Label the container to clearly identify its contents.

Container No. 3. Note the color of the indicating silica gel to determine if it has been completely spent and make a notation of its condition. Transfer the silica gel from the fourth impinger to its original container and seal. A funnel may make it easier to pour the silica gel without spilling. A rubber policeman may be used as an aid in removing the silica gel from the impinger. it is not necessary to remove the small amount of dust particles that may adhere to the impinger wall and are difficult to remove. Since the gain in weight is to be used for moisture calculations, do not use any water or other liquids to transfer the silica gel. If a balance is available in the field, follow the procedure for container No. 3 in Section 4.3.

Impinger Water. Treat the impingers as follows; Make a notation of any color or film in the liquid catch. Measure the liquid which is in the first three impingers to within ±1 ml by using a graduated cylinder or by weighing it to within ±0.5 g by using a balance (if one is available). Record the volume or weight of liquid present. This information is required to calculate the moisture content of the effluent gas.

Discard the liquid after measuring and recording the volume or weight, unless analysis of the impinger catch is required (see Note, Section 2.1.7).

If a different type of condenser is used, measure the amount of moisture condensed either volumetrically or gravimetrically.

Whenever possible, containers should be shipped in such a way that they remain upright at all times.

4.3 Analysis. Record the data required on a sheet such as the one shown in Figure 5-3. Handle each sample container as follows:

Plant _____

Date _____

Run No. _____

Filter No. _____

Amount liquid lost during transport _____

Acetone blank volume, ml _____

Acetone wash volume, ml _____

Acetone blank concentration, mg/mg (equation 5-4) _____

Acetone wash blank, mg (equation 5-5) _____

CONTAINER NUMBER	WEIGHT OF PARTICULATE COLLECTED, mg		
	FINAL WEIGHT	TARE WEIGHT	WEIGHT GAIN
1			
2			
TOTAL			
		Less acetone blank	
		Weight of particulate matter	

	VOLUME OF LIQUID WATER COLLECTED		
	IMPINGER VOLUME, ml.	SILICA GEL WEIGHT, g	
FINAL			
INITIAL			
LIQUID COLLECTED			
TOTAL VOLUME COLLECTED		g*	ml

* CONVERT WEIGHT OF WATER TO VOLUME BY DIVIDING TOTAL WEIGHT INCREASE BY DENSITY OF WATER (1g/ml).

$$\frac{\text{INCREASE, g}}{\text{1 g/ml}} = \text{VOLUME WATER, ml}$$

Figure 5-3. Analytical data.

Container No. 1. Leave the contents in the shipping container or transfer the filter and any loose particulate from the sample container to a tared glass weighing dish. Desiccate for 24 hours in a desiccator containing anhydrous calcium sulfate. Weigh to a constant weight and report the results to the nearest 0.1 mg. For purposes of this Section, 4.3, the term "constant weight" means a difference of no more than 0.5 mg or 1 percent of total weight less tare weight, whichever is greater, between two consecutive weighings, with no less than 6 hours of desiccation time between weighings.

Alternatively, the sample may be oven dried at 105° C (220° F) for 2 to 3 hours, cooled in the desiccator, and weighed to a constant weight, unless otherwise specified by the Administrator. The tester may also opt to oven dry the sample at 105° C (220° F) for 2 to 3 hours, weigh the sample, and use this weight as a final weight.

Container No. 2. Note the level of liquid in the container and confirm on the analysis sheet whether or not leakage occurred during transport. If a noticeable amount of leakage has occurred, either void the sample or use methods, subject to the approval of the Administrator, to correct the final results. Measure the liquid in this container either volumetrically to ±1 ml or gravimetrically to ±0.5 g. Transfer the contents to a tared 250-ml beaker and evaporate to dryness at ambient temperature and pressure. Desiccate for 24 hours and weigh to a constant weight. Report the results to the nearest 0.1 mg.

Container No. 3. Weigh the spent silica gel (or silica gel plus impinger) to the nearest 0.5 g using a balance. This step may be conducted in the field.

"Acetone Blank" Container. Measure acetone in this container either volumentrically or gravimetrically. Transfer the acetone to a tared 250-ml beaker and evaporate to dryness at ambient temperature and pressure. Desiccate for 24 hours and weigh to a constant weight. Report the results to the nearest 0.1 mg.

NOTE: At the option of the tester, the contents of Container No. 2 as well as the acetone blank container may be evaporated at temperatures higher than ambient. If evaporation is done at an elevated temperature, the temperature must be below the boiling point of the solvent; also, to prevent "bumping," the evaporation process must be closely supervised, and the contents of the beaker must be swirled occasionally to maintain an even temperature. Use extreme care, as acetone is highly flammable and has a low flash point.

5. *Calibration*

Maintain a laboratory log of all calibrations.

5.1 Probe Nozzle. Probe nozzles shall be calibrated before their initial use in the field. Using a micrometer, measure the inside diameter of the nozzle to the nearest 01.025 mm (0.001 in.). Make three separate measurements using different diameters each time, and obtain the average of the measurements. The difference between the high and low numbers shall not exceed 0.1 mm (0.004 in.). When nozzles become nicked, dented, or corroded, they shall be reshaped, sharpened, and recalibrated before use. Each nozzle shall be permanently and uniquely identified.

5.2 Pitot Tube. The Type S pitot tube assembly shall be calibrated according to the procedure outlined in Section 4 of Method 2.

5.3 Metering System. Before its initial use in the field, the metering system shall be calibrated according to the procedure outlined in APTD-0576. Instead of physically adjusting the dry gas meter dial readings to correspond to the wet test meter readings, calibration factors may be used to mathematically correct the gas meter dial readings to the proper values. Before calibrating the metering system, it is suggested that a leak-check be conducted. For metering systems having diaphragm pumps, the normal leak-check procedure will not detect leakages within the pump. for these cases the following leak-check procedure is suggested: make a 10-minute calibration run at 0.0057 m^3/min (0.02 cfm); at the end of the run, take the difference of the measured wet test meter and dry gas meter volumes; divide the difference by 10, to get the leak rate. The leak rate should not exceed 0.00057 m^3/min (0.02 cfm).

After each field use, the calibration of the metering system shall be checked by performing three calibration runs at a single, intermediate orifice setting (based on the previous field test). With the vacuum set at the maximum value reached during the test series. To adjust the vacuum, insert a valve between the wet test meter and the inlet of the metering system. Calculate the average value of the calibration factor. If the calibration has changed by more than 5 percent, recalibrate the meter over the full range of orifice settings, as outlined in APTD-0576.

Alternative procedures, e.g., using the orifice meter coefficients, maybe used, subject to the approval of the Administrator.

NOTE: If the dry gas meter coefficient values obtained before and after a test series differ by more than 5 percent, the test series shall either be voided, or calculations for test series shall be performed using whichever meter coefficient value (i.e., before or after) gives the lower value of total sample volume.

5.4 Probe Heater Calibration. The probe heating system shall be calibrated before its initial use in the field according to the procedure outlined in APTD-0576. Probes constructed according to APTD-0581 need not be calibrated if the calibration curves in APTD-0576 are used.

5.5 Temperature Gauges. Use the procedure in Section 4.3 of Method 2 to calibrate in-stack temperature gauges. Dial thermometers, such as are used for the dry gas meter and condenser outlet, shall be calibrated against mercury-in-glass thermometers.

5.6 Leak Check of Metering System Shown in Figure 5-1. That portion of the sampling train from the pump to the orifice meter should be leak checked prior to initial use and after each shipment. Leakage after the pump will result in less volume being recorded than is actually sampled. The following procedure is suggested (see Figure 5-4): Close the main valve on the meter box. Insert a one-hole rubber stopper with rubber tubing attached into the orifice exhaust pipe. Disconnect and vent the low side of the orifice manometer. Close off the low side orifice tap. Pressurize the system to 13 to 18 cm (5 to 7 in.) water column by blowing into the rubber tubing. Pinch off the tubing and observe the manometer for one minute. A loss of pressure on the manometer indicates a leak in the meter box; leaks, if present, must be corrected.

5.7 Barometer. Calibrate against a mercury barometer.

6. *Calculations*

Carry out calculations, retaining at least one extra decimal figure beyond that of the acquired data. Round off figures after the final calculation. Other forms of the equations may be used as long as they give equivalent results.

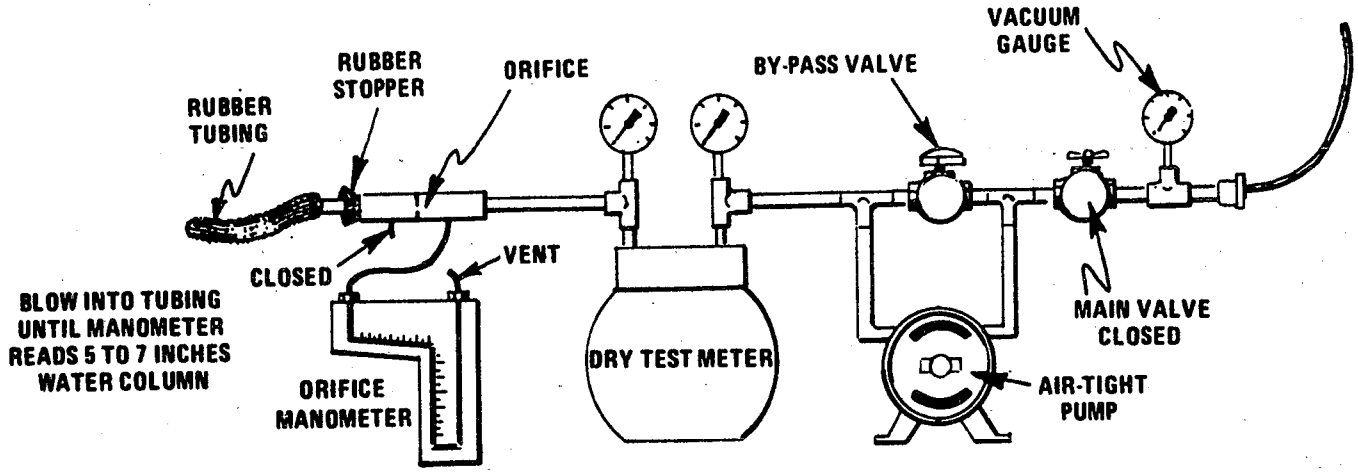

Figure 5-4. Leak check of meter box.

6.1 Nomenclature

A_n=Cross-sectional area of nozzle, m² (ft²).
B_{ws}=Water vapor in the gas stream, proportion by volume.
C_a=Acetone blank residue concentration, mg/g.
c_s=Concentration of particulate matter in stack gas, dry basis, corrected to standard conditions, g/dscm (g/dscf).
I=Percent of isokinetic sampling.
L_a=Maximum acceptable leakage rate for either a pretest leak check or for a leak check following a component change; equal to 0.0057 m³/min (0.02 cfm) or 4 percent of the average sampling rate, whichever is less.
L_i=Individual leakage rate observed during the leak check conducted prior to the "i^{th}" component change (i=1, 2, 3....n), m³/min (cfm).
L_p=Leakage rate observed during the post-test leak check, m³/min (cfm).
m_a=Total amount of particulate matter collected, mg.
M_w=Molecular weight of water, 18.0 g/g-mole (18.0lb/lb-mole).
m_a=Mass of residue of acteone after evaporation, mg.
P_{bar}=Barometric pressure at the sampling site, mm Hg (in. Hg).
P_s=Absolute stack gas pressure, mm Hg (in. Hg).
P_{std}=Standard absolute pressure, 760 mm Hg (29.92 in. Hg).
R=Ideal gas constant, 0.06236 mm Hg-m³/°K-g-mole (21.85 in. Hg-ft³/°R-lb-mole).
T_m=Absolute average dry gas meter temperature (see Figure 5-2), °K (°R).
T_s=Absolute average stack gas temperature (see Figure 5-2), °K (°R).
T_{std}=Standard absolute temperature, 293° K (528° R).
V_a=Volume of acetone blank, ml.
V_{aw}=Volume of acetone used in wash, ml.
V_{lc}=Total volume of liquid collected in impingers and silica gel (see Figure 5-3), ml.
V_m=Volume of gas sample as measured by dry gas meter, dcm (dscf).
$V_{m(std)}$=Volume of gas sample measured by the dry gas meter, corrected to standard conditions, dscm (dscf).
$V_{w(std)}$=Volume of water vapor in the gas sample, corrected to standard conditions, scm (scf).
v_s=Stack gas velocity, calculated by Method 2, Equation 2-9, using data obtained from Method 5, m/sec (ft/sec).
W_a=Weight of residue in acetone wash, mg.
Y=Dry gas meter calibration factor.
ΔH=Average pressure differential across the orifice meter (see Figure 5-2), mm H_2O (in. H_2O).
ρ_a=Density of acetone, mg/ml (see label on bottle).
ρ_w=Density of water, 0.9982 g/ml (0.002201 lb/ml).
θ=Total sampling time, min.
θ_1=Sampling time interval, from the beginning of a run until the first component change, min.
θ_i=Sampling time interval, between two successive component changes, beginning with the interval between the first and second changes, min.
θ_p=Sampling time interval, from the final (n^{th}) component change until the end of the sampling run, min.
13.6=Specific gravity of mercury.
60=Sec/min.
100=Conversion to percent.

6.2 Average dry gas meter temperature and average orifice pressure drop. See data sheet (Figure 5-2).

6.3 Dry Gas Volume. Correct the sample volume measured by the dry gas meter to standard conditions (20° C, 760 mm Hg or 68° F, 29.92 in. Hg) by using Equation 5-1.

$$V_{m\,(std)} = V_m Y\left(\frac{T_{std}}{T_m}\right)\left[\frac{P_{bar}+\frac{\Delta H}{13.6}}{P_{std}}\right] = K_1 V_m Y\,\frac{P_{bar}+(\Delta H/13.6)}{T_m}$$

Equation 5-1

where;
K_1=0.3858 °K/mm Hg for metric units
=17.64 °R/in. Hg for English units

NOTE: Equation 5-1 can be used as written unless the leakage rate observed during any of the mandatory leak checks (i.e., the post-test leak check or leak checks conducted prior to component changes) exceeds L_a. If L_p or L_i exceeds L_a, Equation 5-1 must be modified as follows:

(a) Case I. No component changes made during sampling run. In this case, replace V_m in Equation 5-1 with the expression:

$$V_m-(L_p-L_a)\theta]$$

(b) Case II. One or more component changes made during the sampling run. In this case, replace V_m in Equation 5-1 by the expression:

$$\left[V_m-(L_1-L_a)\theta_1 - \sum_{i=2}^{n}(L_i-L_a)\theta_i-(L_p-L_a)\theta_p\right]$$

and substitute only for those leakage rates (L_i or L_p) which exceed L_a.

6.4 Volume of water vapor.

$$V_{w(\mathrm{std})}=V_{1c}\left(\frac{\rho_w}{M_w}\right)\left(\frac{RT_{\mathrm{std}}}{P_{\mathrm{std}}}\right)=K_2V_{1c}$$

Equation 5-2

where:

K_2=0.001333 m³/ml for metric units
=0.04707 ft³/ml for English units.

6.5 Moisture Content.

$$B_{ws}=\frac{V_{w(\mathrm{std})}}{V_{m(\mathrm{std})}+V_{w(\mathrm{std})}}$$

Equation 5-3

NOTE: In saturated or water droplet-laden gas streams, two calculations of the moisture content of the stack gas shall be made, one from the impinger analysis (Equation 5-3), and a second from the assumption of saturated conditions. The lower of the two values of B_w shall be considered correct. The procedure for determining the moisture content based upon assumption of saturated conditions is given in the Note of Section 1.2 of Method 4. For the purposes of this method, the average stack gas temperature from Figure 5-2 may be used to make this determination, provided that the accuracy of the in-stack temperature sensor is ±1° C (2° F).

6.6 Acetone Blank Concentration.

$$C_a=\frac{m_a}{V_a\rho_a}$$

Equation 5-4

6.7 Acetone Wash Blank.

$$W_a=C_aV_{aw}\rho_a$$

Equation 5-5

6.8 Total Particulate Weight. Determine the total particulate catch from the sum of the weights obtained from containers 1 and 2 less the acetone blank (see Figure 5-3).

NOTE: Refer to Section 4.1.5 to assist in calculation of results involving two or more filter assemblies or two or more sampling trains.

6.9 Particulate Concentration.

$$c_s=(0.001\ g/mg)\ (m_n/V_{m(\mathrm{std})})$$

Equation 5-6

6.10 Conversion Factors:

From	To	Multiply by
scf	m³	0.02832.
g/ft³	gr/ft³	15.43.
g/ft³	lb/ft³	2.205×10^{-3}.
g/ft³	g/m³	35.31.

6.11 Isokinetic Varition.

6.11.1 Calculation From Raw Data.

$$I=\frac{100\,T_s[K_3V_{1c}+(V_m/T_m)\,(P_{\mathrm{bar}}+\Delta H/13.6)]}{60\,\theta v_s P_s A_n}$$

Equation 5-7

where:

K_3=0.003454 mm Hg−m³/ml−°K for metric units.
=0.002669-in. Hg−ft³/ml−°R for English units.

6.11.2 Calculation From Intermediate Values.

$$I=\frac{T_sV_{m(\mathrm{std})}P_{\mathrm{std}}100}{T_{\mathrm{std}}v_s\theta A_nP_s60(1-B_{ws})}$$

$$=K_4\frac{T_sV_{m(\mathrm{std})}}{P_sV_sA_n\theta(1-B_{ws})}$$

Equation 5-8

where:

K_4=4.320 for metric units
=0.09450 for English units.

6.12 Acceptable Results. If 90 percent I <110< percent, the results are acceptable. If the results are low in comparison to the standard and I is beyond the acceptable range, or, if I is less than 90 percent, the Administrator may opt to accept the results.

Use Citation 4 to make judgments. Otherwise, reject the results and repeat the test.

7. *Bibliography*

1. Addendum to Specifications for Incinerator Testing at Federal Facilities. PHS, NCAPC. Dec. 6, 1967.

2. Martin, Robert M. Construction Details of Isokinetic Source-Sampling Equipment. Environmental Protection Agency. Research Triangle Park, N.C. APTD-0581. April 1971.

3. Rom, Jerome J. Maintenance, Calibration, and Operation of Isokinetic Source Sampling Equipment. Environmental Protection Agency. Research Triangle Park, N.C. APTD-0576. March, 1972.

4. Smith, W. S., R. T. Shigehara, and W. F. Todd. A method of Interpreting Stack Sampling Data. Paper Presented at the 63d Annual Meeting of the Air Pollution Control Association, St. Louis, Mo. June 14-19, 1970.

5. Smith, W. S., et al. Stack Gas Sampling Improved and Simplified With New Equipment. APCA Paper No. 67-119. 1967.

6. Specifications for Incinerator Testing at Federal Facilities. PHS, NCAPC. 1967.

7. Shigehara, R. T. Adjustments in the EPA Nomograph for Different Pitot Tube Coefficients and Dry Molecular Weights. Stack Sampling News *2*:4-11, October, 1974.

8. Vollaro, R. F. A Survey of Commercially Available Instrumentation For the Measurement of Low-Range Gas Velocities. U.S. Environmental Protection Agency, Emission Measurement Branch. Research Triangle Park, N.C. November, 1976 (unpublished paper).

9. Annual Book of ASTM Standards. Part 26. Gaseous Fuels; Coal and Coke; Atmospheric Analysis. American Society for Testing and Materials. Philadelphia, Pa. 1974. pp. 617-622.

10. Felix, L. G., G. I. Clinard, G. E. Lacey, and J. D. McCain. Inertial Cascade Impactor Substrate Media for Flue Gas Sampling. U.S. Environmental Protection Agency. Research Triangle Park, N.C. 27711, Publication No. EPA-600/7-77-060. June 1977. 83 p.

METHOD 17—DETERMINATION OF PARTICULATE EMISSIONS FROM STATIONARY SOURCES (IN-STACK FILTRATION METHOD)

Introduction

Particulate matter is not an absolute quantity; rather, it is a function of temperature and pressure. Therefore, to prevent variability in particulate matter emission regulations and/or associated test methods, the temperature and pressure at which particulate matter is to be measured must be carefully defined. Of the two variables (i.e., temperature and pressure), temperature has the greater effect upon the amount of particulate matter in an effluent gas stream; in most stationary source categories, the effect of pressure appears to be negligible.

In method 5, 250° F is established as a nominal reference temperature. Thus, where Method 5 is specified in an applicable subpart of the standards, particulate matter is defined with respect to temperature. In order to maintain a collection temperature of 250° F, Method 5 employs a heated glass sample probe and a heated filter holder. This equipment is somewhat cumbersome and requires care in its operation. Therefore, where particulate matter concentrations (over the normal range of temperature associated with a specified source category) are known to be independent of temperature, it is desirable to eliminate the glass probe and heating systems, and sample at stack temperature.

This method describes an in-stack sampling system and sampling procedures for use in such cases. It is intended to be used only when specified by an applicable subpart of the standards, and only within the applicable temperature limits (if specified), or when otherwise approved by the Administrator.

1. *Principle and Applicability.*

1.1 Principle. Particulate matter is withdrawn isokinetically from the source and collected on a glass fiber filter maintained at stack temperature. The particulate mass is determined gravimetrically after removal of uncombined water.

1.2 Applicability. This method applies to the determination of particulate emissions from stationary sources for determining compliance with new source performance standards, only when specifically provided for in an applicable subpart of the standards. This method is not applicable to stacks that contain liquid droplets or are saturated with water vapor. In addition, this method shall not be used as written if the projected cross-sectional area of the probe extension-filter holder assembly covers more than 5 percent of the stack cross-sectional area (see Section 4.1.2).

2. *Apparatus.*

2.1 Sampling Train. A schematic of the sampling train used in this method is shown in Figure 17-1. Construction details for many, but not all, of the train components are given in APTD-0581 (Citation 2 in Section 7); for changes from the APTD-0581 document and for allowable modifications to Figure 17-1, consult with the Administrator.

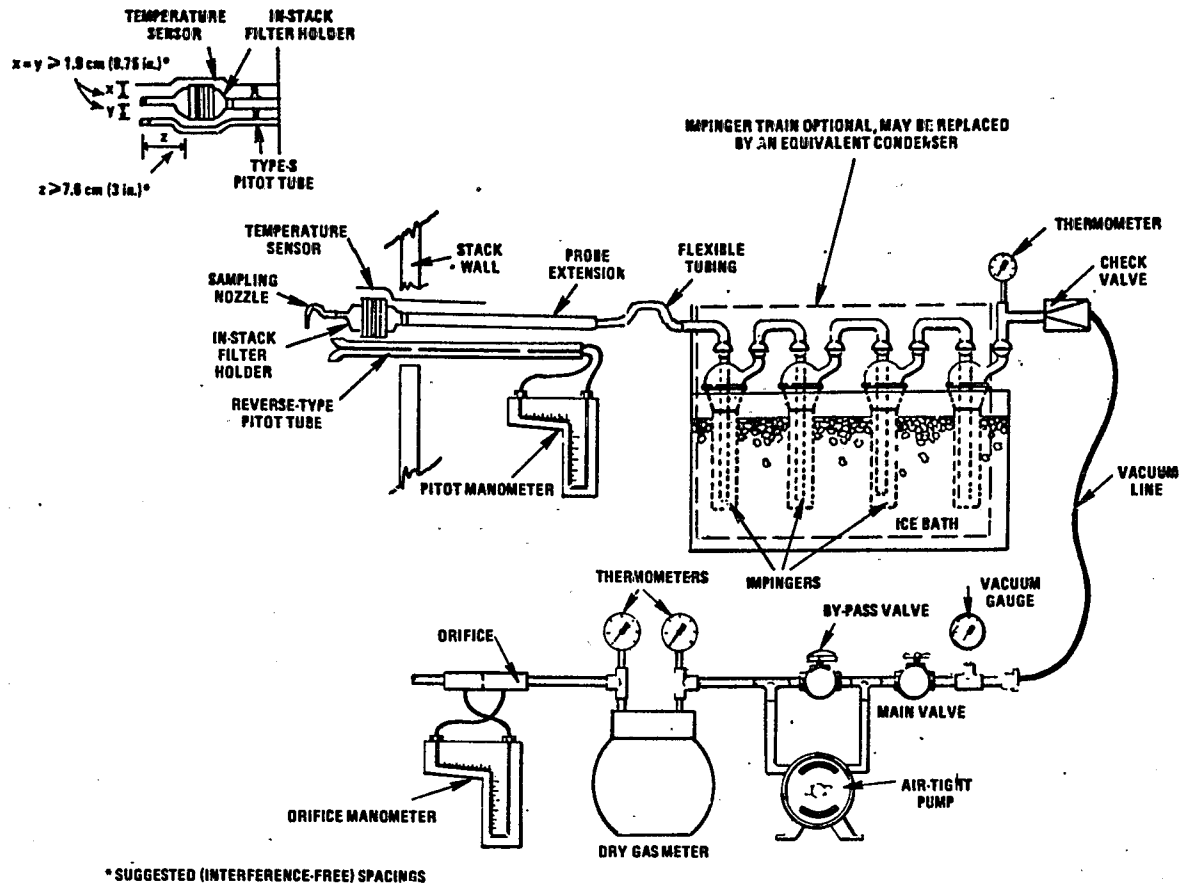

Figure 17-1. Particulate-Sampling Train, Equipped with In-Stack Filter.

The operating and maintenance procedures for many of the sampling train components are described in APTD-0576 (Citation 3 in Section 7). Since correct usage is important in obtaining valid results, all users should read the APTD-0576 document and adopt the operating and maintenance procedures outlined in it, unless otherwise specified herein. The sampling train consists of the following components:

2.1.1 Probe Nozzle. Stainless steel (316) or glass, with sharp, tapered leading edge. The angle of taper shall be 30° and the taper shall be on the outside to preserve a constant internal diameter. The probe nozzle shall be of the button-hook or elbow design, unless otherwise specified by the Administrator. If made of stainless steel, the nozzle shall be constructed from seamless tubing. Other materials of construction may be used subject to the approval of the Administrator.

A range of sizes suitable for isokinetic sampling should be available, e.g., 0.32 to 1.27 cm (⅛ to ½ in)—or larger if higher volume sampling trains are used—inside diameter (ID) nozzles in increments of 0.16 cm (1/16 in). Each nozzle shall be calibrated according to the procedures outlined in Section 5.1.

2.1.2 Filter Holder. The in-stack filter holder shall be constructed of borosilicate or quartz glass, or stainless steel; if a gasket is used, it shall be made of silicone rubber, Teflon, or stainless steel. Other holder and gasket materials may be used subject to the approval of the Administrator. The filter holder shall be designed to provide a positive seal against leakage from the outside or around the filter.

2.1.3 Probe Extension. Any suitable rigid probe extension may be used after the filter holder.

2.1.4 Pitot Tube. Type S, as described in Section 2.1 of Method 2, or other device approved by the Administrator; the pitot tube shall be attached to the probe extension to allow constant monitoring of the stack gas velocity (see Figure 17-1). The impact (high pressure) opening plane of the pitot tube shall be even with or above the nozzle entry plane during sampling (see Method 2, Figure 2-6b). It is recommended: (1) that the pitot tube have a known baseline coefficient, determined as outlined in Section 4 of Method 2; and (2) that this known coefficient be preserved by placing the pitot tube in an interference-free arrangement with respect to the sampling nozzle, filter holder, and temperature sensor (see Figure 17-1). Note that the 1.9 cm (0.75 in) free-space between the nozzle and pitot tube shown in Figure 17-1, is based on a 1.3 cm (0.5 in) ID nozzle. If the sampling train is designed for sampling at higher flow rates than that described in APTD-0581, thus necessitating the use of larger sized nozzles, the free-space shall be 1.9 cm (0.75 in) with the largest sized nozzle in place.

Source-sampling assemblies that do not meet the minimum spacing requirements of Figure 17-1 (or the equivalent of these requirements, e.g., Figure 2-7 of Method 2) may be used; however, the pitot tube coefficients of such assemblies shall be determined by calibration, using methods subject to the approval of the Administrator.

2.1.5 Differential Pressure Gauge. Inclined manometer or equivalent device (two), as described in Section 2.2 of Method 2. One manometer shall be used for velocity head (Δp) readings, and the other, for orifice differential pressure readings.

2.1.6 Condenser. It is recommended that the impinger system described in Method 5 be used to determine the moisture content of the stack gas. Alternatively, any system that allows measurement of both the water condensed and the moisture leaving the condenser, each to within 1 ml or 1 g, may be used. The moisture leaving the condenser can be measured either by: (1) monitoring the temperature and pressure at the exit of the condenser and using Dalton's law of partial pressures; or (2) passing the sample gas stream through a silica gel trap with exit gases kept below 20° C (68° F) and determining the weight gain.

Flexible tubing may be used between the probe extension and condenser. If means other than silica gel are used to determine the amount of moisture leaving the condenser, it is recommended that silica gel still be used between the condenser system and pump to prevent moisture condensation in the pump and metering devices and to avoid the need to make corrections for moisture in the metered volume.

2.1.7 Metering System. Vacuum gauge, leak-free pump, thermometers capable of measuring temperature to within 3° C (5.4° F), dry gas meter capable of measuring volume to within 2 percent, and related equipment, as shown in Figure 17-1. Other metering systems capable of maintaining sampling rates within 10 percent of isokinetic and of determining sample volumes to within 2 percent may be used, subject to the approval of the Administrator. When the metering system is used in conjunction with a pitot tube, the system shall enable checks of isokinetic rates.

Sampling trains utilizing metering systems designed for higher flow rates than that described in APTD-0581 or APTD-0576 may be used provided that the specifications of this method are met.

2.1.8 Barometer. Mercury, aneroid, or other barometer capable of measuring atmospheric pressure to within 2.5 mm Hg (0.1 in. Hg). In many cases, the barometric reading may be obtained from a nearby national weather service station, in which case

the station value (which is the absolute barometric pressure) shall be requested and an adjustment for elevation differences between the weather station and sampling point shall be applied at a rate of minus 2.5 mm Hg (0.1 in. Hg) per 30 m (100 ft) elevation increase or vice versa for elevation decrease.

2.1.9 Gas Density Determination Equipment. Temperature sensor and pressure gauge, as described in Sections 2.3 and 2.4 of Method 2, and gas analyzer, if necessary, as described in Method 3.

The temperature sensor shall be attached to either the pitot tube or to the probe extension, in a fixed configuration. If the temperature sensor is attached in the field; the sensor shall be placed in an interference-free arrangement with respect to the Type S pitot tube openings (as shown in Figure 17-1 or in Figure 2-7 of Method 2). Alternatively, the temperature sensor need not be attached to either the probe extension or pitot tube during sampling, provided that a difference of not more than 1 percent in the average velocity measurement is introduced. This alternative is subject to the approval of the Administrator.

2.2 Sample Recovery.

2.2.1 Probe Nozzle Brush. Nylon bristle brush with stainless steel wire handle. The brush shall be properly sized and shaped to brush out the probe nozzle.

2.2.2 Wash Bottles—Two. Glass wash bottles are recommended; polyethylene wash bottles may be used at the option of the tester. It is recommended that acetone not be stored in polyethylene bottles for longer than a month.

2.2.3 Glass Sample Storage Containers. Chemically resistant, borosilicate glass bottles, for acetone washes, 500 ml or 1000 ml. Screw cap liners shall either be rubber-backed Teflon or shall be constructed so as to be leak-free and resistant to chemical attack by acetone. (Narrow mouth glass bottles have been found to be less prone to leakage.) Alternatively, polyethylene bottles may be used.

2.2.4 Petri Dishes. For filter samples; glass or polyethylene, unless otherwise specified by the Administrator.

2.2.5 Graduated Cylinder and/or Balance. To measure condensed water to within 1 ml or 1 g. Graduated cylinders shall have subdivisions no greater than 2 ml. Most laboratory balances are capable of weighing to the nearest 0.5 g or less. Any of these balances is suitable for use here and in Section 2.3.4.

2.2.6 Plastic Storage Containers. Air tight containers to store silica gel.

2.2.7 Funnel and Rubber Policeman. To aid in transfer of silica gel to container; not necessary if silica gel is weighed in the field.

2.2.8 Funnel. Glass or polyethylene, to aid in sample recovery.

2.3 Analysis.

2.3.1 Glass Weighing Dishes.

2.3.2 Desiccator.

2.3.3 Analytical Balance. To measure to within 0.1 mg.

2.3.4 Balance. To measure to within 0.5 mg.

2.3.5 Beakers. 250 ml.

2.3.6 Hygrometer. To measure the relative humidity of the laboratory environment.

2.3.7 Temperature Gauge. To measure the temperature of the laboratory environment.

3. *Reagents.*

3.1 Sampling.

3.1.1 Filters. The in-stack filters shall be glass mats or thimble fiber filters, without organic binders, and shall exhibit at least 99.95 percent efficiency (0.05 percent penetration) on 0.3 micron dioctyl phthalate smoke particles. The filter efficiency tests shall be conducted in accordance with ASTM standard method D 2986-71. Test data from the supplier's quality control program are sufficient for this purpose.

3.1.2 Silica Gel. Indicating type, 6- to 16-mesh. If previously used, dry at 175° C (350° F) for 2 hours. New silica gel may be used as received. Alternatively, other types of desiccants (equivalent or better) may be used, subject to the approval of the Administrator.

3.1.3 Crushed Ice.

3.1.4 Stopcock Grease. Acetone-insoluble, heat-stable silicone grease. This is not necessary if screw-on connectors with Teflon sleeves, or similar, are used. Alternatively, other types of stopcock grease may be used, subject to the approval of the Administrator.

3.2 Sample Recovery. Acetone, reagent grade, 0.001 percent residue, in glass bottles. Acetone from metal containers generally has a high residue blank and should not be used. Sometimes, suppliers transfer acetone to glass bottles from metal containers. Thus, acetone blanks shall be run prior to field use and only acetone with low blank values (0.001 percent) shall be used. In no case shall a blank value of greater than 0.001 percent of the weight of acetone used be subtracted from the sample weight.

3.3 Analysis.

3.3.1 Acetone. Same as 3.2.

3.3.2 Desiccant. Anhydrous calcium sulfate, indicating type. Alternatively, other types of desiccants may be used, subject to the approval of the Administrator.

4. *Procedure.*

4.1 Sampling. The complexity of this method is such that, in order to obtain reliable results, testers should be trained and experienced with the test procedures.

4.1.1 Pretest Preparation. All components shall be maintained and calibrated ac-

cording to the procedure described in APTD-0576, unless otherwise specified herein.

Weigh several 200 to 300 g portions of silica gel in air-tight containers to the nearest 0.5 g. Record the total weight of the silica gel plus container, on each container. As an alternative, the silica gel need not be preweighed, but may be weighed directly in its impinger or sampling holder just prior to train assembly.

Check filters visually against light for irregularities and flaws or pinhole leaks. Label filters of the proper size on the back side near the edge using numbering machine ink. As an alternative, label the shipping containers (glass or plastic petri dishes) and keep the filters in these containers at all times except during sampling and weighing.

Desiccate the filters at 20±5.6° C (68±10° F) and ambient pressure for at least 24 hours and weigh at intervals of at least 6 hours to a constant weight, i.e., 0.5 mg change from previous weighing; record results to the nearest 0.1 mg. During each weighing the filter must not be exposed to the laboratory atmosphere for a period greater than 2 minutes and a relative humidity above 50 percent. Alternatively (unless otherwise specified by the Administrator), the filters may be oven dried at 105° C (220° F) for 2 to 3 hours, desiccated for 2 hours, and weighed. Procedures other than those described, which account for relative humidity effects, may be used, subject to the approval of the Administrator.

4.1.2 Preliminary Determinations. Select the sampling site and the minimum number of sampling points according to Method 1 or as specified by the Administrator. Make a projected-area model of the probe extension-filter holder assembly, with the pitot tube face openings positioned along the centerline of the stack, as shown in Figure 17-2. Calculate the estimated cross-section blockage, as shown in Figure 17-2. If the blockage exceeds 5 percent of the duct cross sectional area, the tester has the following options: (1) a suitable out-of-stack filtration method may be used instead of in-stack filtration; or (2) a special in-stack arrangement, in which the sampling and velocity measurement sites are separate, may be used; for details concerning this approach, consult with the Administrator (see also Citation 10 in Section 7). Determine the stack pressure, temperature, and the range of velocity heads using Method 2; it is recommended that a leak-check of the pitot lines (see Method 2, Section 3.1) be performed. Determine the moisture content using Approximation Method 4 or its alternatives for the purpose of making isokinetic sampling rate settings. Determine the stack gas dry molecular weight, as described in Method 2, Section 3.6; if integrated Method 3 sampling is used for molecular weight determination, the integrated bag sample shall be taken simultaneously with, and for the same total length of time as, the particular sample run.

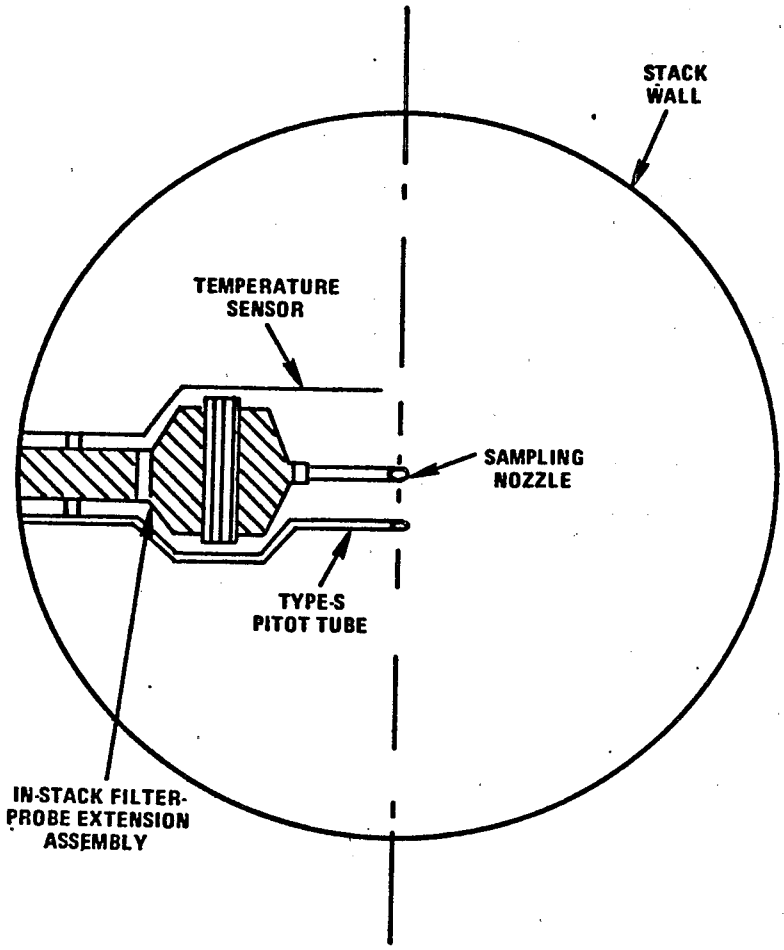

$$\text{ESTIMATED BLOCKAGE (\%)} = \left[\frac{\text{SHADED AREA}}{\text{DUCT AREA}}\right] \times 100$$

Figure 17-2. Projected-area model of cross-section blockage (approximate average for a sample traverse) caused by an in-stack filter holder-probe extension assembly.

Select a nozzle size based on the range of velocity heads, such that it is not necessary to change the nozzle size in order to maintain isokinetic sampling rates. During the run, do not change the nozzle size. Ensure that the proper differential pressure gauge is chosen for the range of velocity heads encountered (see Section 2.2 of Method 2).

Select a probe extension length such that all traverse points can be sampled. For large stacks, consider sampling from opposite sides of the stack to reduce the length of probes.

Select a total sampling time greater than or equal to the minimum total sampling time specified in the test procedures for the specific industry such that (1) the sampling time per point is not less than 2 minutes (or some greater time interval if specified by the Administrator), and (2) the sample volume taken (corrected to standard conditions) will exceed the required minimum total gas sample volume. The latter is based on an approximate average sampling rate.

It is recommended that the number of minutes sampled at each point be an integer or an integer plus one-half minute, in order to avoid timekeeping errors.

In some circumstances, e.g., batch cycles, it may be necessary to sample for shorter times at the traverse points and to obtain smaller gas sample volumes. In these cases, the Administrator's approval must first be obtained.

4.1.3 Preparation of Collection Train. During preparation and assembly of the sampling train, keep all openings where contamination can occur covered until just prior to assembly or until sampling is about to begin.

If impingers are used to condense stack gas moisture, prepare them as follows: place 100 ml of water in each of the first two impingers, leave the third impinger empty, and transfer approximately 200 to 300 g of preweighed silica gel from its container to the fourth impinger. More silica gel may be used, but care should be taken to ensure that it is not entrained and carried out from the impinger during sampling. Place the container in a clean place for later use in the sample recovery. Alternatively, the weight of the silica gel plus impinger may be determined to the nearest 0.5 g and recorded.

If some means other than impingers is used to condense moisture, prepare the condenser (and, if appropriate, silica gel for condenser outlet) for use.

Using a tweezer or clean disposable surgical gloves, place a labeled (identified) and weighed filter in the filter holder. Be sure that the filter is properly centered and the gasket properly placed so as not to allow the sample gas stream to circumvent the filter. Check filter for tears after assembly is completed. Mark the probe extension with heat resistant tape or by some other method to denote the proper distance into the stack or duct for each sampling point.

Assemble the train as in Figure 17-1, using a very light coat of silicone grease on all ground glass joints and greasing only the outer portion (see APTD-0576) to avoid possibility of contamination by the silicone grease. Place crushed ice around the impingers.

4.1.4 Leak Check Procedures.

4.1.4.1 Pretest Leak-Check. A pretest leak-check is recommended, but not required. If the tester opts to conduct the pretest leak-check, the following procedure shall be used.

After the sampling train has been assembled, plug the inlet to the probe nozzle with a material that will be able to withstand the stack temperature. Insert the filter holder into the stack and wait approximately 5 minutes (or longer, if necessary) to allow the system to come to equilibrium with the temperature of the stack gas stream. Turn on the pump and draw a vacuum of at least 380 mm Hg (15 in. Hg); note that a lower vacuum may be used, provided that it is not exceeded during the test. Determine the leakage rate. A leakage rate in excess of 4 percent of the average sampling rate or 0.00057 m^3/min. (0.02 cfm), whichever is less, is unacceptable.

The following leak-check instructions for the sampling train described in APTD-0576 and APTD-0581 may be helpful. Start the pump with by-pass valve fully open and coarse adjust valve completely closed. Partially open the coarse adjust valve and slowly close the by-pass valve until the desired vacuum is reached. Do not reverse direction of by-pass valve. If the desired vacuum is exceeded, either leak-check at this higher vacuum or end the leak-check as shown below and start over.

When the leak-check is completed, first slowly remove the plug from the inlet to the probe nozzle and immediately turn off the vacuum pump. This prevents water from being forced backward and keeps silica gel from being entrained backward.

4.1.4.2 Leak-Checks During Sample Run. If, during the sampling run, a component (e.g., filter assembly or impinger) change becomes necessary, a leak-check shall be conducted immediately before the change is made. The leak-check shall be done according to the procedure outlined in Section 4.1.4.1 above, except that it shall be done at a vacuum equal to or greater than the maximum value recorded up to that point in the test. If the leakage rate is found to be no greater than 0.00057 m^3/min (0.02 cfm) or 4 percent of the average sampling rate (whichever is less), the results are acceptable, and no correction will need to be applied to the total volume of dry gas metered;

If, however, a higher leakage rate is obtained, the tester shall either record the leakage rate and plan to correct the sample volume as shown in Section 6.3 of this method, or shall void the sampling run.

Immediately after component changes, leak-checks are optional; if such leak-checks are done, the procedure outlined in Section 4.1.4.1 above shall be used.

4.1.4.3 Post-Test Leak-Check. A leak-check is mandatory at the conclusion of each sampling run. The leak-check shall be done in accordance with the procedures outlined in Section 4.1.4.1, except that it shall be conducted at a vacuum equal to or greater than the maximum value reached during the sampling run. If the leakage rate is found to be no greater than 0.00057 m^3/min (0.02 cfm) or 4 percent of the average sampling rate (whichever is less), the results are acceptable, and no correction need be applied to the total volume of dry gas metered. If, however, a higher leakage rate is obtained, the tester shall either record the leakage rate and correct the sample volume as shown in Section 6.3 of this method, or shall void the sampling run.

4.1.5 Particulate Train Operation. During the sampling run, maintain a sampling rate such that sampling is within 10 percent of true isokinetic, unless otherwise specified by the Administrator.

For each run, record the data required on the example data sheet shown in Figure 17-3. Be sure to record the initial dry gas meter reading. Record the dry gas meter readings at the beginning and end of each sampling time increment, when changes in flow rates are made, before and after each leak check, and when sampling is halted. Take other readings required by Figure 17-3 at least once at each sample point during each time increment and additional readings when significant changes (20 percent variation in velocity head readings) necessitate additional adjustments in flow rate. Level and zero the manometer. Because the manometer level and zero may drift due to vibrations and temperature changes, make periodic checks during the traverse.

PLANT _____
LOCATION _____
OPERATOR _____
DATE _____
RUN NO. _____
SAMPLE BOX NO. _____
METER BOX NO. _____
METER $\Delta H@$ _____
C FACTOR _____
PITOT TUBE COEFFICIENT, Cp _____

SCHEMATIC OF STACK CROSS SECTION

BAROMETRIC PRESSURE _____
ASSUMED MOISTURE, % _____
PROBE EXTENSION LENGTH, m(ft.) _____
NOZZLE IDENTIFICATION NO. _____
AVERAGE CALIBRATED NOZZLE DIAMETER, cm(in.) _____
FILTER NO. _____
LEAK RATE, m^3/min,(cfm) _____
STATIC PRESSURE, mm Hg (in. Hg) _____

TRAVERSE POINT NUMBER	SAMPLING TIME (θ), min.	VACUUM mm Hg (in. Hg)	STACK TEMPERATURE (T_S), °C (°F)	VELOCITY HEAD (ΔP_S), mm H_2O (in. H_2O)	PRESSURE DIFFERENTIAL ACROSS ORIFICE METER, mm H_2O (in. H_2O)	GAS SAMPLE VOLUME, m^3 (ft^3)	GAS SAMPLE TEMPERATURE AT DRY GAS METER		TEMPERATURE OF GAS LEAVING CONDENSER OR LAST IMPINGER, °C (°F)
							INLET, °C (°F)	OUTLET, °C (°F)	
TOTAL							Avg	Avg	
AVERAGE							Avg		

Figure 17-3. Particulate field data.

Clean the portholes prior to the test run to minimize the chance of sampling the deposited material. To begin sampling, remove the nozzle cap and verify that the pitot tube and probe extension are properly positioned. Position the nozzle at the first traverse point with the tip pointing directly into the gas stream. Immediately start the pump and adjust the flow to isokinetic conditions. Nomographs are available, which aid in the rapid adjustment to the isokinetic sampling rate without excessive computations. These nomographs are designed for use when the Type S pitot tube coefficient is 0.85±0.02, and the stack gas equivalent density (dry molecular weight) is equal to 29±4. APTD-0576 details the procedure for using the nomographs. If C_p and M_d are outside the above stated ranges, do not use the nomographs unless appropriate steps (see Citation 7 in Section 7) are taken to compensate for the deviations.

When the stack is under significant negative pressure (height of impinger stem), take care to close the coarse adjust valve before inserting the probe extension assembly into the stack to prevent water from being forced backward. If necessary, the pump may be turned on with the coarse adjust valve closed.

When the probe is in position, block off the openings around the probe and porthole to prevent unrepresentative dilution of the gas stream.

Traverse the stack cross section, as required by Method 1 or as specified by the Administrator, being careful not to bump the probe nozzle into the stack walls when sampling near the walls or when removing or inserting the probe extension through the portholes, to minimize chance of extracting deposited material.

During the test run, take appropriate steps (e.g., adding crushed ice to the impinger ice bath) to maintain a temperature of less than 20° C (68° F) at the condenser outlet; this will prevent excessive moisture losses. Also, periodically check the level and zero of the manometer.

If the pressure drop across the filter becomes too high, making isokinetic sampling difficult to maintain, the filter may be replaced in the midst of a sample run. It is recommended that another complete filter holder assembly be used rather than attempting to change the filter itself. Before a new filter holder is installed, conduct a leak check, as outlined in Section 4.1.4.2. The total particulate weight shall include the summation of all filter assembly catches.

A single train shall be used for the entire sample run, except in cases where simultaneous sampling is required in two or more separate ducts or at two or more different locations within the same duct, or, in cases where equipment failure necessitates a change of trains. In all other situations, the use of two or more trains will be subject to the approval of the Administrator. Note that when two or more trains are used, a separate analysis of the collected particulate from each train shall be performed, unless identical nozzle sizes were used on all trains, in which case the particulate catches from the individual trains may be combined and a single analysis performed.

At the end of the sample run, turn off the pump, remove the probe extension assembly from the stack, and record the final dry gas meter reading. Perform a leak-check, as outlined in Section 4.1.4.3. Also, leak-check the pitot lines as described in Section 3.1 of Method 2; the lines must pass this leak-check, in order to validate the velocity head data.

4.1.6 Calculation of Percent Isokinetic. Calculate percent isokinetic (see Section 6.11) to determine whether another test run should be made. If there is difficulty in maintaining isokinetic rates due to source conditions, consult with the Administrator for possible variance on the isokinetic rates.

4.2 Sample Recovery. Proper cleanup procedure begins as soon as the probe extension assembly is removed from the stack at the end of the sampling period. Allow the assembly to cool.

When the assembly can be safely handled, wipe off all external particulate matter near the tip of the probe nozzle and place a cap over it to prevent losing or gaining particulate matter. Do not cap off the probe tip tightly while the sampling train is cooling down as this would create a vacuum in the filter holder, forcing condenser water backward.

Before moving the sample train to the cleanup site, disconnect the filter holder-probe nozzle assembly from the probe extension; cap the open inlet of the probe extension. Be careful not to lose any condensate, if present. Remove the umbilical cord from the condenser outlet and cap the outlet. If a flexible line is used between the first impinger (or condenser) and the probe extension, disconnect the line at the probe extension and let any condensed water or liquid drain into the impingers or condenser. Disconnect the probe extension from the condenser; cap the probe extension outlet. After wiping off the silicone grease, cap off the condenser inlet. Ground glass stoppers, plastic caps, or serum caps (whichever are appropriate) may be used to close these openings.

Transfer both the filter holder-probe nozzle assembly and the condenser to the cleanup area. This area should be clean and protected from the wind so that the chances of contaminating or losing the sample will be minimized.

Save a portion of the acetone used for cleanup as a blank. Take 200 ml of this ac-

etone directly from the wash bottle being used and place it in a glass sample container labeled "acetone blank."

Inspect the train prior to and during disassembly and note any abnormal conditions. Treat the samples as follows:

Container No. 1. Carefully remove the filter from the filter holder and place it in its identified petri dish container. Use a pair of tweezers and/or clean disposable surgical gloves to handle the filter. If it is necessary to fold the filter, do so such that the particulate cake is inside the fold. Carefully transfer to the petri dish any particulate matter and/or filter fibers which adhere to the filter holder gasket, by using a dry Nylon bristle brush and/or a sharp-edged blade. Seal the container.

Container No. 2. Taking care to see that dust on the outside of the probe nozzle or other exterior surfaces does not get into the sample, quantitatively recover particulate matter or any condensate from the probe nozzle, fitting, and front half of the filter holder by washing these components with acetone and placing the wash in a glass container. Distilled water may be used instead of acetone when approved by the Administrator and shall be used when specified by the Administrator; in these cases, save a water blank and follow Administrator's directions on analysis. Perform the acetone rinses as follows:

Carefully remove the probe nozzle and clean the inside surface by rinsing with acetone from a wash bottle and brushing with a Nylon bristle brush. Brush until acetone rinse shows no visible particles, after which make a final rinse of the inside surface with acetone.

Brush and rinse with acetone the inside parts of the fitting in a similar way until no visible particles remain. A funnel (glass or polyethylene) may be used to aid in transferring liquid washes to the container. Rinse the brush with acetone and quantitatively collect these washings in the sample container. Between sampling runs, keep brushes clean and protected from contamination.

After ensuring that all joints are wiped clean of silicone grease (if applicable), clean the inside of the front half of the filter holder by rubbing the surfaces with a Nylon bristle brush and rinsing with acetone. Rinse each surface three times or more if needed to remove visible particulate. Make final rinse of the brush and filter holder. After all acetone washings and particulate matter are collected in the sample container, tighten the lid on the sample container so that acetone will not leak out when it is shipped to the laboratory. Mark the height of the fluid level to determine whether or not leakage occurred during transport. Label the container to clearly identify its contents.

Container No. 3. If silica gel is used in the condenser system for mositure content determination, note the color of the gel to determine if it has been completely spent; make a notation of its condition. Transfer the silica gel back to its original container and seal. A funnel may make it easier to pour the silica gel without spilling, and a rubber policeman may be used as an aid in removing the silica gel. It is not necessary to remove the small amount of dust particles that may adhere to the walls and are difficult to remove. Since the gain in weight is to be used for moisture calculations, do not use any water or other liquids to transfer the silica gel. If a balance is available in the field, follow the procedure for Container No. 3 under "Analysis."

Condenser Water. Treat the condenser or impinger water as follows: make a notation of any color or film in the liquid catch. Measure the liquid volume to within ±1 ml by using a graduated cylinder or, if a balance is available, determine the liquid weight to within ±0.5 g. Record the total volume or weight of liquid present. This information is required to calculate the moisture content of the effluent gas. Discard the liquid after measuring and recording the volume or weight.

4.3 Analysis. Record the data required on the example sheet shown in Figure 17-4. Handle each sample container as follows:

Container No. 1. Leave the contents in the shipping container or transfer the filter and any loose particulate from the sample container to a tared glass weighing dish. Desiccate for 24 hours in a desiccator containing anhydrous calcium sulfate. Weigh to a constant weight and report the results to the nearest 0.1 mg. For purposes of this Section, 4.3, the term "constant weight" means a difference of no more than 0.5 mg or 1 percent of total weight less tare weight, whichever is greater, between two consecutive weighings, with no less than 6 hours of desiccation time between weighings.

Alternatively, the sample may be oven dried at the average stack temperature or 105° C (220° F), whichever is less, for 2 to 3 hours, cooled in the desiccator, and weighed to a constant weight, unless otherwise specified by the Administrator. The tester may also opt to oven dry the sample at the average stack temperature or 105° C (220° F), whichever is less, for 2 to 3 hours, weigh the sample, and use this weight as a final weight.

Plant _____

Date _____

Run No. _____

Filter No. _____

Amount liquid lost during transport _____

Acetone blank volume, ml _____

Acetone wash volume, ml _____

Acetone black concentration, mg/mg (equation 17-4) _____

Acetone wash blank, mg (equation 17-5) _____

CONTAINER NUMBER	WEIGHT OF PARTICULATE COLLECTED, mg		
	FINAL WEIGHT	TARE WEIGHT	WEIGHT GAIN
1			
2			
TOTAL			
		Less acetone blank	
		Weight of particulate matter	

	VOLUME OF LIQUID WATER COLLECTED		
	IMPINGER VOLUME, ml	SILICA GEL WEIGHT, g	
FINAL			
INITIAL			
LIQUID COLLECTED			
TOTAL VOLUME COLLECTED		g*	ml

* CONVERT WEIGHT OF WATER TO VOLUME BY DIVIDING TOTAL WEIGHT INCREASE BY DENSITY OF WATER (1g/ml).

Figure 17-4. Analytical data.

$$\frac{\text{INCREASE, g}}{\text{1 g/ml}} = \text{VOLUME WATER, ml.}$$

Container No. 2. Note the level of liquid in the container and confirm on the analysis sheet whether or not leakage occurred during transport. If a noticeable amount of leakage has occurred, either void the sample or use methods, subject to the approval of the Administrator, to correct the final results. Measure the liquid in this container either volumetrically to ±1 ml or gravimetrically to ±0.5 g. Transfer the contents to a tared 250-ml beaker and evaporate to dryness at ambient temperature and pressure. Desiccate for 24 hours and weigh to a constant weight. Report the results to the nearest 0.1 mg.

Container No. 3. This step may be conducted in the field. Weigh the spent silica gel (or silica gel plus impinger) to the nearest 0.5 g using a balance.

"Acetone Blank" Container. Measure acetone in this container either volumetrically or gravimetrically. Transfer the acetone to a tared 250-ml beaker and evaporate to dryness at ambient temperature and pressure. Desiccate for 24 hours and weigh to a constant weight. Report the results to the nearest 0.1 mg.

NOTE: At the option of the tester, the contents of Container No. 2 as well as the acetone blank container may be evaporated at temperatures higher than ambient. If evaporation is done at an elevated temperature, the temperature must be below the boiling point of the solvent; also, to prevent "bumping," the evaporation process must be closely supervised, and the contents of the beaker must be swirled occasionally to maintain an even temperature. Use extreme care, as acetone is highly flammable and has a low flash point.

5. *Calibration.* Maintain a laboratory log of all calibrations.

5.1 Probe Nozzle. Probe nozzles shall be calibrated before their initial use in the field. Using a micrometer, measure the inside diameter of the nozzle to the nearest 0.025 mm (0.001 in.). Make three separate measurements using different diameters each time, and obtain the average of the measurements. The difference between the high and low numbers shall not exceed 0.1 mm (0.004 in.). When nozzles become nicked, dented, or corroded, they shall be reshaped, sharpened, and recalibrated before use. Each nozzle shall be permanently and uniquely identified.

5.2 Pitot Tube. If the pitot tube is placed in an interference-free arrangement with respect to the other probe assembly components, its baseline (isolated tube) coefficient shall be determined as outlined in Section 4 of Method 2. If the probe assembly is not interference-free, the pitot tube assembly coefficient shall be determined by calibration, using methods subject to the approval of the Administrator.

5.3 Metering System. Before its initial use in the field, the metering system shall be calibrated according to the procedure outlined in APTD-0576. Instead of physically adjusting the dry gas meter dial readings to correspond to the wet test meter readings, calibration factors may be used to mathematically correct the gas meter dial readings to the proper values.

Before calibrating the metering system, it is suggested that a leak-check be conducted. For metering systems having diaphragm pumps, the normal leak-check procedure will not detect leakages within the pump. For these cases the following leak-check procedure is suggested: make a 10-minute calibration run at 0.00057 m^3/min (0.02 cfm); at the end of the run, take the difference of the measured wet test meter and dry gas meter volumes; divide the difference by 10, to get the leak rate. The leak rate should not exceed 0.00057 m^3/min (0.02 cfm).

After each field use, the calibration of the metering system shall be checked by performing three calibration runs at a single, intermediate orifice setting (based on the previous field test), with the vacuum set at the maximum value reached during the test series. To adjust the vacuum, insert a valve between the wet test meter and the inlet of the metering system. Calculate the average value of the calibration factor. If the calibration has changed by more than 5 percent, recalibrate the meter over the full range of orifice settings, as outlined in APTD-0576.

Alternative procedures, e.g., using the orifice meter coefficients, may be used, subject to the approval of the Administrator.

NOTE: If the dry gas meter coefficient values obtained before and after a test series differ by more than 5 percent, the test series shall either be voided, or calculations for the test series shall be performed using whichever meter coefficient value (i.e., before or after) gives the lower value of total sample volume.

5.4 Temperature Gauges. Use the procedure in Section 4.3 of Method 2 to calibrate in-stack temperature gauges. Dial thermometers, such as are used for the dry gas meter and condenser outlet, shall be calibrated against mercury-in-glass thermometers.

5.5 Leak Check of Metering System Shown in Figure 17-1. That portion of the sampling train from the pump to the orifice meter should be leak checked prior to initial use and after each shipment. Leakage after the pump will result in less volume being recorded than is actually sampled. The following procedure is suggested (see Figure 17-5). Close the main valve on the meter box. Insert a one-hole rubber stopper with rubber tubing attached into the orifice ex-

haust pipe. Disconnect and vent the low side of the orifice manometer. Close off the low side orifice tap. Pressurize the system to 13 to 18 cm (5 to 7 in.) water column by blowing into the rubber tubing. Pinch off the tubing and observe the manometer for one minute. A loss of pressure on the manometer indicates a leak in the meter box; leaks, if present, must be corrected.

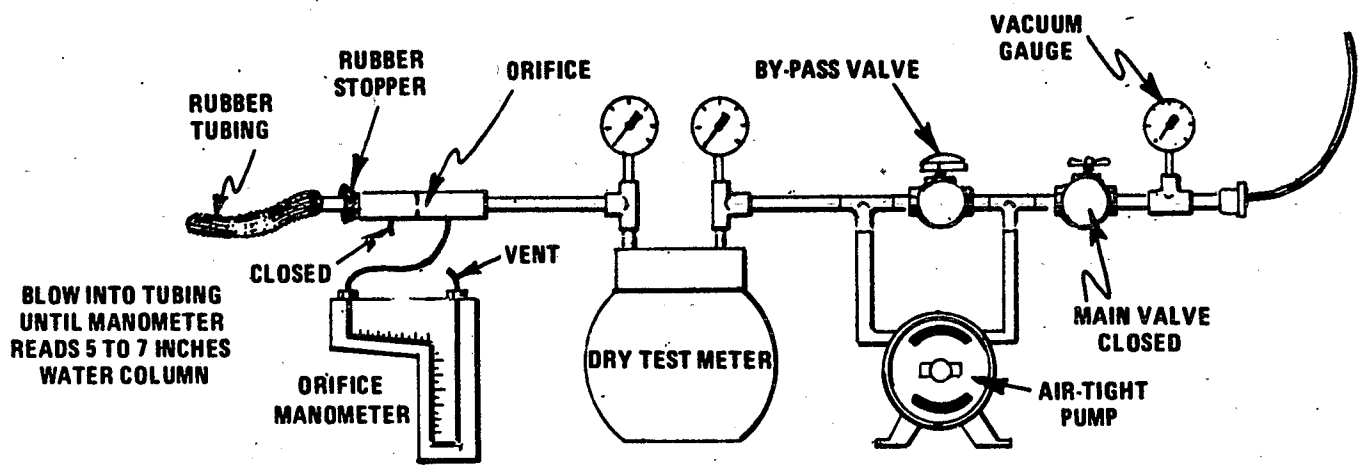

Figure 17-5. Leak check of meter box.

5.6 Barometer. Calibrate against a mercury barometer.

6. *Calculations.* Carry out calculations, retaining at least one extra decimal figure beyond that of the acquired data. Round off figures after the final calculation. Other forms of the equations may be used as long as they give equivalent results.

6.1 Nomenclature.

A_n=Cross-sectional area of nozzle, m^2 (ft^2).
B_{ws}=Water vapor in the gas stream, proportion by volume.
C_a=Acetone blank residue concentration, mg/g.
c_s=Concentration of particulate matter in stack gas, dry basis, corrected to standard conditions, g/dscm (g/dscf).
I=Percent of isokinetic sampling.
L_a=Maximum acceptable leakage rate for either a pretest leak check or for a leak check following a component change; equal to 0.00057 m^3/min (0.02 cfm) or 4 percent of the average sampling rate, whichever is less.
L_i=Individual leakage rate observed during the leak check conducted prior to the "i^{th}" component change (i=1, 2, 3 . . . n), m^3/min (cfm).
L_p=Leakage rate observed during the post-test leak check, m^3/min (cfm).
m_n=Total amount of particulate matter collected, mg.
M_w=Molecular weight of water, 18.0 g/g-mole (18.0 lb/lb-mole).
m_a=Mass of residue of acetone after evaporation, mg.
P_{bar}=Barometric pressure at the sampling site, mm Hg (in. Hg).
P_s=Absolute stack gas pressure, mm Hg (in. Hg).
P_{std}=Standard absolute pressure, 760 mm Hg (29.92 in. Hg).
R=Ideal gas constant, 0.06236 mm Hg-m^3/°K-g-mole (21.85 in. Hg-ft^3/°R-lb-mole).
T_m=Absolute average dry gas meter temperature (see Figure 17-3), °K (°R).
T_s=Absolute average stack gas temperature (see Figure 17-3), °K (°R).
T_{std}=Standard absolute temperature, 293°K (528°R).
V_a=Volume of acetone blank, ml.
V_{aw}=Volume of acetone used in wash, ml.
V_{lc}=Total volume of liquid collected in impingers and silica gel (see Figure 17-4), ml.
V_m=Volume of gas sample as measured by dry gas meter, dcm (dcf).
$V_{m(std)}$=Volume of gas sample measured by the dry gas meter, corrected to standard conditions, dscm (dscf).
$V_{w(std)}$=Volume of water vapor in the gas sample, corrected to standard conditions, scm (scf).
v_s=Stack gas velocity, calculated by Method 2, Equation 2-9, using data obtained from Method 17, m/sec (ft/sec).
W_a=Weight of residue in acetone wash, mg.
Y=Dry gas meter calibration coefficient.
ΔH=Average pressure differential across the orifice meter (see Figure 17-3), mm H_2O (in. H_2O).
ρ_a=Density of acetone, mg/ml (see label on bottle).
ρ_w=Density of water, 0.9982 g/ml (0.002201 lb/ml).
θ=Total sampling time, min.
θ_i=Sampling time interval, from the beginning of a run until the first component change, min.
θ_i=Sampling time interval, between two successive component changes, beginning with the interval between the first and second changes, min.
θ_p=Sampling time interval, from the final (n^{th}) component change until the end of the sampling run, min.
13.6=Specific gravity of mercury.
60=Sec/min.
100=Conversion to percent.

6.2 Average dry gas meter temperature and average orifice pressure drop. See data sheet (Figure 17-3).

6.3 Dry Gas Volume. Correct the sample volume measured by the dry gas meter to standard conditions (20° C, 760 mm Hg or 68° F, 29.92 in. Hg) by using Equation 17-1.

$$V_{m(std)} = V_m Y \left(\frac{T_{std}}{T_m}\right)\left[\frac{P_{bar} + \frac{\Delta H}{13.6}}{P_{std}}\right]$$

$$= K_1 V_m Y \frac{P_{bar} + (\Delta H/13.6)}{T_m}$$

Equation 17-1

where:

K_1=0.3858° K/mm Hg for metric units; 17.64° R/in. Hg for English units.

NOTE: Equation 17-1 can be used as written unless the leakage rate observed during any of the mandatory leak checks (i.e., the post-test leak check or leak checks conducted prior to component changes) exceeds L_a. If L_p or L_i exceeds L_a, Equation 17-1 must be modified as follows:

(a) Case I. No component changes made during sampling run. In this case, replace V_m in Equation 17-1 with the expression:

$$[V_m-(L_p-L_a)\theta]$$

(b) Case II. One or more component changes made during the sampling run. In this case, replace V_m in Equation 17-1 by the expression:

$$[V_m - (L_1 - L_a)\,\theta_1 - \sum_{i=2}^{n} (L_i - L_a)\,\theta_i - (L_p - L_a)\,\theta_p]$$

and substitute only for those leakage rates (L_i or L_p) which exceed L_a.

6.4 Volume of water vapor.

$$V_{w(std)} = V_{1c}\left(\frac{\rho_w}{M_w}\right)\left(\frac{RT_{std}}{P_{std}}\right) = K_2 V_{1c}$$

Equation 17-2

where:

K_2=0.001333 m^3/ml for metric units; 0.04707 ft^3/ml for English units.

6.5 Moisture Content.

$$B_{ws} = \frac{V_{w(std)}}{V_{m(std)} + V_{w(std)}}$$

Equation 17-3

6.6 Acetone Blank Concentration.

$$C_a = \frac{m_a}{V_a\,\rho_a}$$

Equation 17-4

6.7 Acetone Wash Blank.

$$W_a = C_a V_{aw} \rho_a$$

Equation 17-5

6.8 Total Particulate Weight. Determine the total particulate catch from the sum of the weights obtained from containers 1 and 2 less the acetone blank (see Figure 17-4).

NOTE: Refer to Section 4.1.5 to assist in calculation of results involving two or more filter assemblies or two or more sampling trains.

6.9 Particulate Concentration.

$$c_s = (0.001\ g/mg)\,(m_n/V_{m(std)})$$

Equation 17-6

6.10 Conversion Factors:

From	To	Multiply by
scf	m^3	0.02832
g/ft^3	gr/ft^3	15.43
g/ft^3	lb/ft^3	2.205×10^{-3}
g/ft^3	g/m^3	35.31

6.11 Isokinetic Variation.

6.11.1 Calculation from Raw Data.

$$I = \frac{100\,T_s\,[K_3 V_{1c} + (V_m Y/T_m)\,(P_{bar} + \Delta H/13.6)]}{60\,\theta v_s\,P_s\,A_n}$$

Equation 17-7

where:

K_3=0.003454 mm Hg-m^3/ml-°K for metric units; 0.002669 in. Hg-ft^3/ml-°R for English units.

6.11.2 Calculation from Intermediate Values.

$$I = \frac{T_s\,V_{m(std)}\,P_{std}\,100}{T_{std}\,v_s\,\theta\,A_n\,P_s\,60\,(1-B_{ws})}$$

$$= K_4 \frac{T_s\,V_{m(std)}}{P_s\,v_s\,A_n\,\theta\,(1-B_{ws})}$$

Equation 17-8

where:

K_4=4.320 for metric units; 0.09450 for English units.

6.12 Acceptable Results. If 90 percent <I <110 percent, the results are acceptable. If the results are low in comparison to the standard and I is beyond the acceptable range, or, if I is less than 90 percent, the Administrator may opt to accept the results. Use Citation 4 in Section 7 to make judgments. Otherwise, reject the results and repeat the test.

7. *Bibliography.*

1. Addendum to Specifications for Incinerator Testing at Federal Facilities. PHS, NCAPC. December 6, 1967.

2. Martin, Robert M., Construction Details of Isokinetic Source-Sampling Equipment. Environmental Protection Agency. Research Triangle Park, N.C. APTD-0581. April, 1971.

3. Rom, Jerome J., Maintenance, Calibration, and Operation of Isokinetic Source-Sampling Equipment. Environmental Protection Agency. Research Triangle Park, N.C. APTD-0576. March, 1972.

4. Smith, W. S., R. T. Shigehara, and W. F. Todd. A Method of Interpreting Stack Sampling Data. Paper Presented at the 63rd Annual Meeting of the Air Pollution Control Association, St. Louis, Mo. June 14-19, 1970.

5. Smith, W. S., et al., Stack Gas Sampling Improved and Simplified with New Equipment. APCA Paper No. 67-119. 1967.

6. Specifications for Incinerator Testing at Federal Facilities. PHS, NCAPC. 1967.

7. Shigehara, R. T., Adjustments in the EPA Nomograph for Different Pitot Tube Coefficients and Dry Molecular Weights. Stack Sampling News 2:4-11. October, 1974.

8. Vollaro, R. F., A Survey of Commercially Available Instrumentation for the Measurement of Low-Range Gas Velocities. U.S. Environmental Protection Agency, Emission Measurement Branch. Research Triangle Park, N.C. November, 1976 (unpublished paper).

9. Annual Book of ASTM Standards. Part 26. Gaseous Fuels; Coal and Coke; Atmospheric Analysis. American Society for Testing and Materials. Philadelphia, Pa. 1974. pp. 617-622.

10. Vollaro, R. F., Recommended Procedure for Sample Traverses in Ducts Smaller than 12 Inches in Diameter. U.S. Environmental Protection Agency, Emission Measurement Branch. Research Triangle Park, N.C. November, 1976.

APPENDIX C

EPA REFERENCE METHODS 16, 16A

METHOD 16—SEMICONTINUOUS DETERMINATION OF SULFUR EMISSIONS FROM STATIONARY SOURCES

Introduction

The method described below uses the principle of gas chromatographic separation and flame photometric detection. Since there are many systems or sets of operating conditions that represent usable methods of determining sulfur emissions, all systems which employ this principle, but differ only in details of equipment and operation, may be used as alternative methods, provided that the criteria set below are met.

1. *Principle and Applicability.*

1.1 Principle. A gas sample is extracted from the emission source and diluted with clean dry air. An aliquot of the diluted sample is then analyzed for hydrogen sulfide (H_2S), methyl mercaptan (MeSH), dimethyl sulfide (DMS) and dimethyl disulfide (DMDS) by gas chromatographic (GC) separation and flame photometric detection (FPD). These four compounds are known collectively as total reduced sulfur (TRS).

1.2 Applicability. This method is applicable for determination of TRS compounds from recovery furnaces, lime kilns, and smelt dissolving tanks at kraft pulp mills.

2. *Range and Sensitivity.*

2.1 Range. Coupled with a gas chromatographic system utilizing a ten milliliter sample size, the maximum limit of the FPD for each sulfur compound is approximately 1 ppm. This limit is expanded by dilution of the sample gas before analysis. Kraft mill gas samples are normally diluted tenfold (9:1), resulting in an upper limit of about 10 ppm for each compound.

For sources with emission levels between 10 and 100 ppm, the measuring range can be best extended by reducing the sample size to 1 milliliter.

2.2 Using the sample size, the minimum detectable concentration is approximately 50 ppb.

3. *Interferences.*

3.1 Moisture Condensation. Moisture condensation in the sample delivery system, the analytical column, or the FPD burner block can cause losses or interferences. This potential is eliminated by heating the sample line, and by conditioning the sample with dry dilution air to lower its dew point below the operating temperature of the GC/FPD analytical system prior to analysis.

3.2 Carbon Monoxide and Carbon Dioxide. CO and CO_2 have substantial desensitizing effect on the flame photometric detector even after 9:1 dilution. Acceptable systems must demonstrate that they have eliminated this interference by some procedure such as eluting these compounds before any of the compounds to be measured. Compliance with this requirement can be demonstrated by submitting chromatograms of calibration gases with and without CO_2 in the diluent gas. The CO_2 level should be approximately 10 percent for the case with CO_2 present. The two chromatographs should show agreement within the precision limits of Section 4.1.

3.3 Particulate Matter. Particulate matter in gas samples can cause interference by eventual clogging of the analytical system. This interference must be eliminated by use of a probe filter.

3.4 Sulfur Dioxide. SO_2 is not a specific interferent but may be present in such large amounts that it cannot be effectively separated from other compounds of interest. The procedure must be designed to eliminate this problem either by the choice of separation columns or by removal of SO_2

from the sample. In the example system, SO_2 is removed by a citrate buffer solution prior to GC injection. This scrubber will be used when SO_2 levels are high enough to prevent baseline separation from the reduced sulfur compounds.

Compliance with this section can be demonstrated by submitting chromatographs of calibration gases with SO_2 present in the same quantities expected from the emission source to be tested. Acceptable systems shall show baseline separation with the amplifier attenuation set so that the reduced sulfur compound of concern is at least 50 percent of full scale. Base line separation is defined as a return to zero ± percent in the interval between peaks.

4. *Precision and Accuracy.*

4.1 GC/FPD and Dilution System Calibration Precision. A series of three consecutive injections of the same calibration gas, at any dilution, shall produce results which do not vary by more than ±5 percent from the mean of the three injections.

4.2 GC/FPD and Dilution System Calibration Drift. The calibration drift determined from the mean of three injections made at the beginning and end of any 8-hour period shall not exceed ± percent.

4.3 System Calibration Accuracy. Losses through the sample transport system must be measured and a correction factor developed to adjust the calibration accuracy to 100 percent.

5. *Apparatus* (See Figure 16-1).

5.1. Sampling.

5.1.1 Probe. The probe must be made of inert material such as stainless steel or glass. It should be designed to incorporate a filter and to allow calibration gas to enter the probe at or near the sample entry point. Any portion of the probe not exposed to the stack gas must be heated to prevent moisture condensation.

5.1.2 Sample Line. The sample line must be made of Teflon,[1] no greater than 1.3 cm (½) inside diameter. All parts from the probe to the dilution system must be thermostatically heated to 120° C.

5.1.3 Sample Pump. The sample pump shall be a leakless Teflon-coated diaphragm type or equivalent. If the pump is upstream of the dilution system, the pump head must be heated to 120° C.

5.2 Dilution System. The dilution system must be constructed such that all sample contacts are made of inert materials (e.g., stainless steel or Teflon). It must be heated to 120° C. and be capable of approximately a 9:1 dilution of the sample.

5.3 SO_2 Scrubber. The SO_2 Scrubber is a midget impinger packed with glass wool to eliminate entrained mist and charged with potassium citrate-citric acid buffer.

5.4 Gas Chromatograph. The gas chromatograph must have at least the following components:

5.4.1 Oven. Capable of maintaining the separation column at the proper operating temperature ±1° C.

5.4.2 Temperature Gauge. To monitor column oven, detector, and exhaust temperature ±1° C.

5.4.3 Flow System. Gas metering system to measure sample, fuel, combustion gas, and carrier gas flows.

5.4.4 Flame Photometric Detector.

5.4.4.1 Electrometer. Capable of full scale amplification of linear ranges of 10^{-9} to 10^{-4} amperes full scale.

5.4.4.2 Power Supply. Capable of delivering up to 750 volts.

5.4.4.3 Recorder. Compatible with the output voltage range of the electrometer.

5.5 Gas Chromatograph Columns. The column system must be demonstrated to be capble of resolving the four major reduced sulfur compounds: H_2S, MeSH, DMS, and DMDS. It must also demonstrate freedom from known interferences.

To demonstrate that adequate resolution has been achieved, the tester must submit a chromatograph of a calibration gas containing all four of the TRS compounds in the concentration range of the applicable standard. Adequate resolution will be defined as base line separation of adjacent peaks when the amplifier attenuation is set so that the smaller peak is at least 50 percent of full scale. Base line separation is defined in Section 3.4. Systems not meeting this criteria may be considered alternate methods subject to the approval of the Administrator.

5.6 Calibration System. The calibration system must contain the following components.

5.6.1 Tube Chamber. Chamber of glass or Teflon of sufficient dimensions to house permeation tubes.

5.6.2 Flow System. To measure air flow over permeation tubes at ±2 percent. Each flowmeter shall be calibrated after a complete test series with a wet test meter. If the flow measuring device differs from the wet test meter by 5 percent, the completed test shall be discarded. Alternatively, the tester may elect to use the flow data that would yield the lower flow measurement. Calibration with a wet test meter before a test is optional.

5.6.3 Constant Temperature Bath. Device capable of maintaining the permeation tubes at the calibration temperature within ±0.1° C.

5.6.4 Temperature Gauge. Thermometer or equivalent to monitor bath temperature within ±1° C.

6. *Reagents.*

[1]Mention of trade names or specific products does not constitute endorsement by the Environmental Protection Agency.

6.1 Fuel. Hydrogen (H_2) prepurified grade or better.

6.2 Combustion Gas. Oxygen (O_2) or air, research purity or better.

6.3 Carrier Gas. Prepurified grade or better.

6.4 Diluent. Air containing less than 50 ppb total sulfur compounds and less than 10 ppm each of moisture and total hydrocarbons. This gas must be heated prior to mixing with the sample to avoid water condensation at the point of contact.

6.5 Calibration Gases. Permeation tubes, one each of H_2S, MeSH, DMS, and DMDS, agravimetrically calibrated and certified at some convenient operating temperature. These tubes consist of hermetically sealed FEP Teflon tubing in which a liquified gaseous substance is enclosed. The enclosed gas permeates through the tubing wall at a constant rate. When the temperature is constant, calibration gases coverning a wide range of known concentrations can be generated by varying and accurately measuring the flow rate of diluent gas passing over the tubes. These calibration gases are used to calibrate the GC/FPD system and the dilution system.

6.6 Citrate Buffer. Dissolve 300 grams of potassium citrate and 41 grams of anhydrous citric acid in 1 liter of deionized water. 284 grams of sodium citrate may be substituted for the potassium citrate.

7. *Pretest Procedures.* The following procedures are optional but would be helpful in preventing any problem which might occur later and invalidate the entire test.

7.1 After the complete measurement system has been set up at the site and deemed to be operational, the following procedures should be completed before sampling is initiated.

7.1.1 Leak Test. Appropriate leak test procedures should be employed to verify the integrity of all components, sample lines, and connections. The following leak test procedure is suggested: For components upstream of the sample pump, attach the probe end of the sample line to a ma- nometer or vacuum gauge, start the pump and pull greater than 50 mm (2 in.) Hg vacuum, close off the pump outlet, and then stop the pump and ascertain that there is no leak for 1 minute. For components after the pump, apply a slight positive pressure and check for leaks by applying a liquid (detergent in water, for example) at each joint. Bubbling indicates the presence of a leak.

7.1.2 System Performance. Since the complete system is calibrated following each test, the precise calibration of each component is not critical. However, these components should be verified to be operating properly. This verification can be performed by observing the response of flowmeters or of the GC output to changes in flow rates or calibration gas concentrations and ascertaining the response to be within predicted limits. In any component, or if the complete system fails to respond in a normal and predictable manner, the source of the discrepancy should be identified and corrected before proceeding.

8. *Calibration.* Prior to any sampling run, calibrate the system using the following procedures. (If more than one run is performed during any 24-hour period, a calibration need not be performed prior to the second and any subsequent runs. The calibration must, however, be verified as prescribed in Section 10, after the last run made within the 24-hour period.)

8.1 General Considerations. This section outlines steps to be followed for use of the GC/FPD and the dilution system. The procedure does not include detailed instructions because the operation of these systems is complex, and it requires a understanding of the individual system being used. Each system should include a written operating manual describing in detail the operating procedures associated with each component in the measurement system. In addition, the operator should be familiar with the operating principles of the components; particularly the GC/FPD. The citations in the Bibliography at the end of this method are recommended for review for this purpose.

8.2 Calibration Procedure. Insert the permeation tubes into the tube chamber. Check the bath temperature to assure agreement with the calibration temperature of the tubes within ±0.1° C. Allow 24 hours for the tubes to equilibrate. Alternatively equilibration may be verified by injecting samples of calibration gas at 1-hour intervals. The permeation tubes can be assumed to have reached equilibrium when consecutive hourly samples agree within the precision limits of Section 4.1.

Vary the amount of air flowing over the tubes to produce the desired concentrations for calibrating the analytical and dilution systems. The air flow across the tubes must at all times exceed the flow requirement of the analytical systems. The concentration in parts per million generated by a tube containing a specific permeant can be calculated as follows:

$$C = K \frac{P_r}{ML}$$

Equation 16-1

where:

10.2 Recalibration. After each run, or after a series of runs made within a 24-hour period, perform a partial recalibration using the procedures in Section 8. Only H_2S (or other permeant) need be used to recalibrate the GC/FPD analysis system (8.3) and the dilution system (8.5).

10.3 Determination of Calibration Drift. Compare the calibration curves obtained prior to the runs, to the calibration curves obtained under paragraph 10.1. The calibration drift should not exceed the limits set forth in subsection 4.2. If the drift exceeds this limit, the intervening run or runs should be considered not valid. The tester, however, may instead have the option of choosing the calibration data set which would give the highest sample values.

11. *Calculations.*

11.1 Determine the concentrations of each reduced sulfur compound detected directly from the calibration curves. Alternatively, the concentrations may be calculated using the equation for the least square line.

11.2 Calculation of TRS. Total reduced sulfur will be determined for each anaylsis made by summing the concentrations of each reduced sulfur compound resolved during a given analysis.

$$TRS = \Sigma\,(H_2S,\ MeSH,\ DMS,\ 2DMDS)d$$

Equation 16-2

where:

TRS=Total reduced sulfur in ppm, wet basis.
H_2S=Hydrogen sulfide, ppm.
MeSH=Methyl mercaptan, ppm.
DMS=Dimethyl sulfide, ppm.
DMDS=Dimethyl disulfide, ppm.
d=Dilution factor, dimensionless.

11.3 Average TRS. The average TRS will be determined as follows:
Average TRS=

$$\text{Average TRS} = \frac{\sum_{i=1}^{N} TRS_i}{N(1-B_{wo})}$$

Average TRS=Average total reduced suflur in ppm, dry basis.
TRS_i=Total reduced sulfur in ppm as determined by Equation 16-2.
N=Number of samples.
B_{wo}=Fraction of volume of water vapor in the gas stream as determined by reference method 4—Determination of Moisture in Stack Gases (36 FR 24887).

11.4 Average concentration of individual reduced sulfur compounds.

$$C = \frac{\sum_{i=1}^{N} S_i}{N}$$

Equation 16-3

where:

S_i=Concentration of any reduced sulfur compound from the ith sample injection, ppm.
C=Average concentration of any one of the reduced sulfur compounds for the entire run, ppm.
N=Number of injections in any run period.

12. *Example System.* Described below is a system utilized by EPA in gathering NSPS data. This system does not now reflect all the latest developments in equipment and column technology, but it does represent one system that has been demonstrated to work.

12.1 Apparatus.

12.1.1 Sampling System.

12.1.1.1 Probe. Figure 16-1 illustrates the probe used in lime kilns and other sources where significant amounts of particulate matter are present. the probe is designed with the deflector shield placed between the sample and the gas inlet holes and the glass wool plugs to reduce clogging of the filter and possible adsorption of sample gas. The exposed portion of the probe between the sampling port and the sample line is heated with heating tape.

12.1.1.2 Sample Line 3/16 inch inside diameter Teflon tubing, heated to 120° C. This temperature is controlled by a thermostatic heater.

12.1.1.3 Sample Pump. Leakless Teflon coated diaphragm type or equivalent. The pump head is heated to 120° C by enclosing it in the sample dilution box (12.1.2.4 below).

12.1.2 Dilution System. A schematic diagram of the dynamic dilution system is given in Figure 16-2. The dilution system is constructed such that all sample contacts are made of inert materials. The dilution system which is heated to 120° C must be capable of a minimum of 9:1 dilution of sample. Equipment used in the dilution system is listed below:

12.1.2.1 Dilution Pump. Model A-150 Kohmyhr Teflon positive displacement type, nonadjustable 150 cc/min. ±2.0 percent, or equivalent, per dilution stage. A 9:1 dilution of sample is accomplished by combining 150 cc of sample with 1,350 cc of clean dry air as shown in Figure 16-2.

12.1.2.2 Valves. Three-way Teflon solenoid or manual type.

12.1.2.3 Tubing. Teflon tubing and fittings are used throughout from the sample probe to the GC/FPD to present an inert surface for sample gas.

12.1.2.4 Box. Insulated box, heated and maintained at 120° C, of sufficient dimensions to house dilution apparatus.

12.1.2.5 Flowmeters. Rotameters or equivalent to measure flow from 0 to 1500 ml/min ±1 percent per dilution stage.

12.1.3 SO_2 Scrubber. Midget impinger with 15 ml of potassium citrate buffer to absorb SO_2 in the sample.

12.1.4 Gas Chromatograph Columns. Two types of columns are used for separation of low and high molecular weight sulfur compounds:

12.1.4.1 Low Molecular Weight Sulfur Compounds Column (GC/FPD-I).

12.1.4.1.1 Separation Column. 11 m by 2.16 mm (36 ft by 0.085 in) inside diameter Teflon tubing packed with 30/60 mesh Teflon coated with 5 percent polyphenyl ether and 0.05 percent orthophosphoric acid, or equivalent (see Figure 16-3).

12.1.4.1.2 Stripper or Precolumn. 0.6 m by 2.16 mm (2 ft by 0.085 in) inside diameter Teflon tubing.

12.1.4.1.3 Sample Valve. Teflon 10-port gas sampling valve, equipped with a 10 ml sample loop, actuated by compressed air (Figure 16-3).

12.1.4.1.4 Oven. For containing sample valve, stripper column and separation column. The oven should be capable of maintaining an elevated temperature ranging from ambient to 100° C, constant within ±1° C.

12.1.4.1.5 Temperature Monitor. Thermocouple pyrometer to measure column oven, detector, and exhaust temperature ±1° C.

12.1.4.1.6 Flow System. Gas metering system to measure sample flow, hydrogen flow, and oxygen flow (and nitrogen carrier gas flow).

12.1.4.1.7 Detector. Flame photometric detector.

12.1.4.1.8 Electrometer. Capable of full scale amplification of linear ranges of 10^{-9} to 10^{-4} amperes full scale.

12.1.4.1.9 Power Supply. Capable of delivering up to 750 volts.

12.1.4.1.10 Recorder. Compatible with the output voltage range of the electrometer.

12.1.4.2 High Molecular Weight Compounds Column (GC/FPD-II).

12.1.4.2.1 Separation Column. 3.05 m by 2.16 mm (10 ft by 0.0885 in) inside diameter Teflon tubing packed with 30/60 mesh Teflon coated with 10 percent Triton X-305, or equivalent.

12.1.4.2.2 Sample Valve. Teflon 6-port gas sampling valve equipped with a 10 ml sample loop, actuated by compressed air (Figure 16-3).

12.1.4.2.3 Other Components. All components same as in 12.1.4.1.5 to 12.1.4.1.10.

12.1.5 Calibration. Permeation tube system (figure 16-4).

12.1.5.1 Tube Chamber. Glass chamber of sufficient dimensions to house permeation tubes.

12.1.5.2 Mass Flowmeters. Two mass flowmeters in the range 0-3 l/min. and 0-10 l/min. to measure air flow over permeation tubes at ±2 percent. These flowmeters shall be cross-calibrated at the beginning of each test. Using a convenient flow rate in the measuring range of both flowmeters, set and monitor the flow rate of gas over the permeation tubes. Injection of calibration gas generated at this flow rate as measured by one flowmeter followed by injection of calibration gas at the same flow rate as measured by the other flowmeter should agree within the specified precision limits. If they do not, then there is a problem with the mass flow measurement. Each mass flowmeter shall be calibrated prior to the first test with a wet test meter and thereafter, at least once each year.

12.1.5.3 Constant Temperature Bath. Capable of maintaining permeation tubes at certification temperature of 30° C. within ±0.1° C.

12.2 Reagents

12.2.1 Fuel. Hydrogen (H_2) prepurified grade or better.

12.2.2. Combustion Gas. Oxygen (O_2) research purity or better.

12.2.3 Carrier Gas. Nitrogen (N_2) prepurified grade or better.

12.2.4 Diluent. Air containing less than 50 ppb total sulfur compounds and less than 10 ppm each of moisture and total hydrocarbons, and filtered using MSA filters 46727 and 79030, or equivalent. Removal of sulfur compounds can be verified by injecting dilution air only, described in Section 8.3.

12.2.5 Compressed Air. 60 psig for GC valve actuation.

12.2.6 Calibrated Gases. Permeation tubes gravimetrically calibrated and certified at 30.0° C.

12.2.7 Citrate Buffer. Dissolve 300 grams of potassium citrate and 41 grams of anhydrous citric acid in 1 liter of deionized water. 284 grams of sodium citrate may be substituted for the potassium citrate.

12.3 Operating Parameters.

12.3.1 Low-Molecular Weight Sulfur Compounds. The operating parameters for the GC/FPD system used for low molecular weight compounds are as follows: nitrogen carrier gas flow rate of 50 cc/min, exhaust temperature of 110° C, detector temperature of 105° C, oven temperature of 40° C, hydrogen flow rate of 80 cc/min, oxygen flow rate of 20 cc/min, and sample flow rate between 20 and 80 cc/min.

12.3.2 High-Molecular Weight Sulfur Compounds. The operating parameters for the GC/FPD system for high molecular weight compounds are the same as in 12.3.1 except: oven temperature of 70° C, and nitrogen carrier gas flow of 100 cc/min.

12.4 Analysis Procedure.

12.4.1 Analysis. Aliquots of diluted sample are injected simultaneously into both GC/FPD analyzers for analysis. GC/FPD-I is used to measure the low-molecular weight reduced sulfur compounds. The low molecular weight compounds include hydrogen sulfide, methyl mercaptan, and dimethyl sulfide. GC/FPD-II is used to resolve the high-molecular weight compound. The high-molecular weight compound is dimethyl disulfide.

12.4.1.1 Analysis of Low-Molecular Weight Sulfur Compounds. The sample valve is actuated for 3 minutes in which time an aliquot of diluted sample is injected into the stripper column and analytical column. The valve is then deactivated for approximately 12 minutes in which time, the analytical column continues to be foreflushed, the stripper column is backflushed, and the sample loop is refilled. Monitor the responses. The elution time for each compound will be determined during calibration.

12.4.1.2 Analysis of High-Molecular Weight Sulfur Compounds. The procedure is essentially the same as above except that no stripper column is needed.

13. *Bibliography.*

13.1 O'Keeffe, A. E. and G. C. Ortman. "Primary Standards for Trace Gas Analysis." Analytical Chemical Journal, 38,760 (1966).

13.2 Stevens, R. K., A. E. O'Keeffe, and G. C. Ortman. "Absolute Calibration of a Flame Photometric Detector to Volatile Sulfur Compounds at Sub-Part-Per-Million Levels." Environmental Science and Technology, 3:7 (July, 1969).

13.3 Mulick, J. D., R. K. Stevens, and R. Baumgardner. "An Analytical System Designed to Measure Multiple Malodorous Compounds Related to Kraft Mill Activities." Presented at the 12th Conference on Methods in Air Pollution and Industrial Hygiene Studies, University of Southern California, Los Angeles, CA. April 6-8, 1971.

13.4 Devonald, R. H., R. S. Serenius, and A. D. McIntyre. "Evaluation of the Flame Photometric Detector for Analysis of Sulfur Compounds." Pulp and Paper Magazine of Canada, 73,3 (March, 1972).

13.5 Grimley, K. W., W. S. Smith, and R. M. Martin. "The Use of a Dynamic Dilution System in the Conditioning of Stack Gases for Automated Analysis by a Mobile Sampling Van." Presented at the 63rd Annual APCA Meeting in St. Louis, Mo. June 14-19, 1970.

13.6 General Reference. Standard Methods of Chemical Analysis Volume III A and B Instrumental Methods. Sixth Edition. Van Nostrand Reinhold Co.

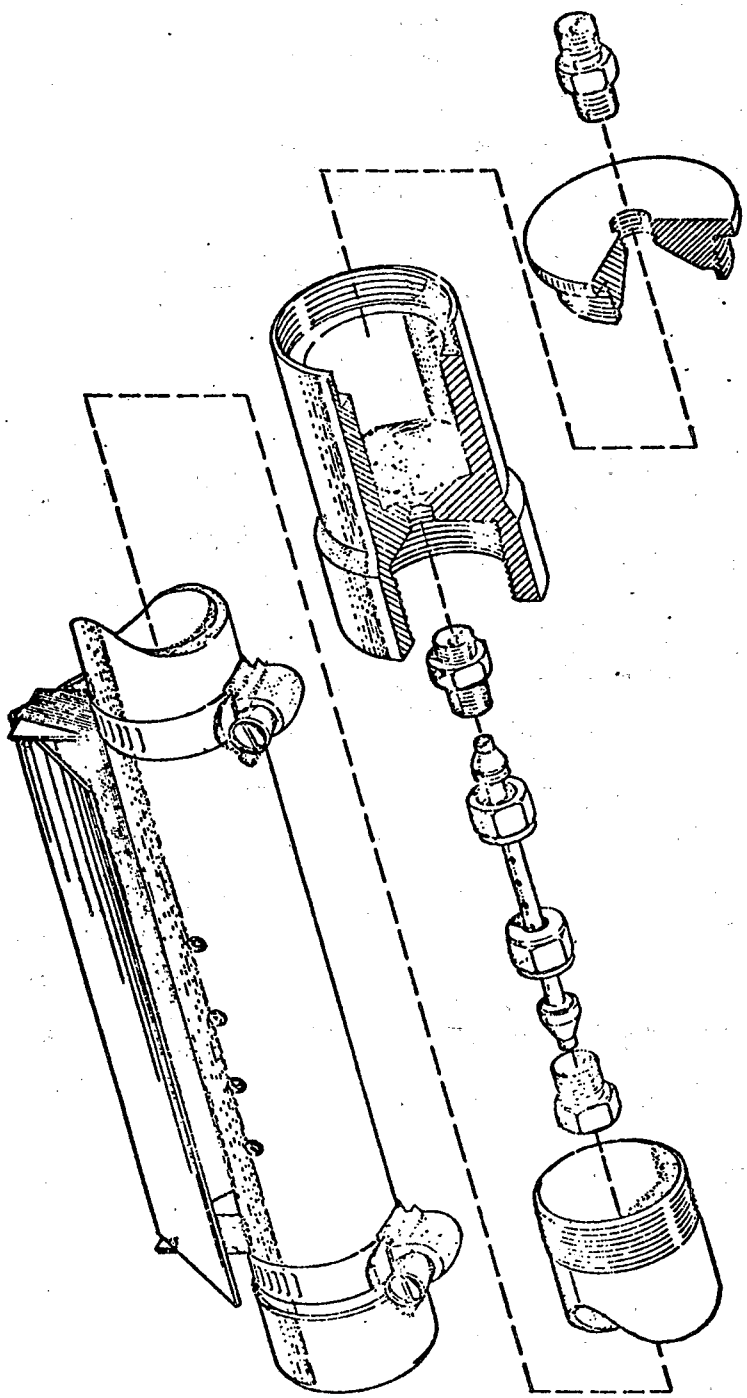

Figure 16-1. Probe used for sample gas containing high particulate loadings.

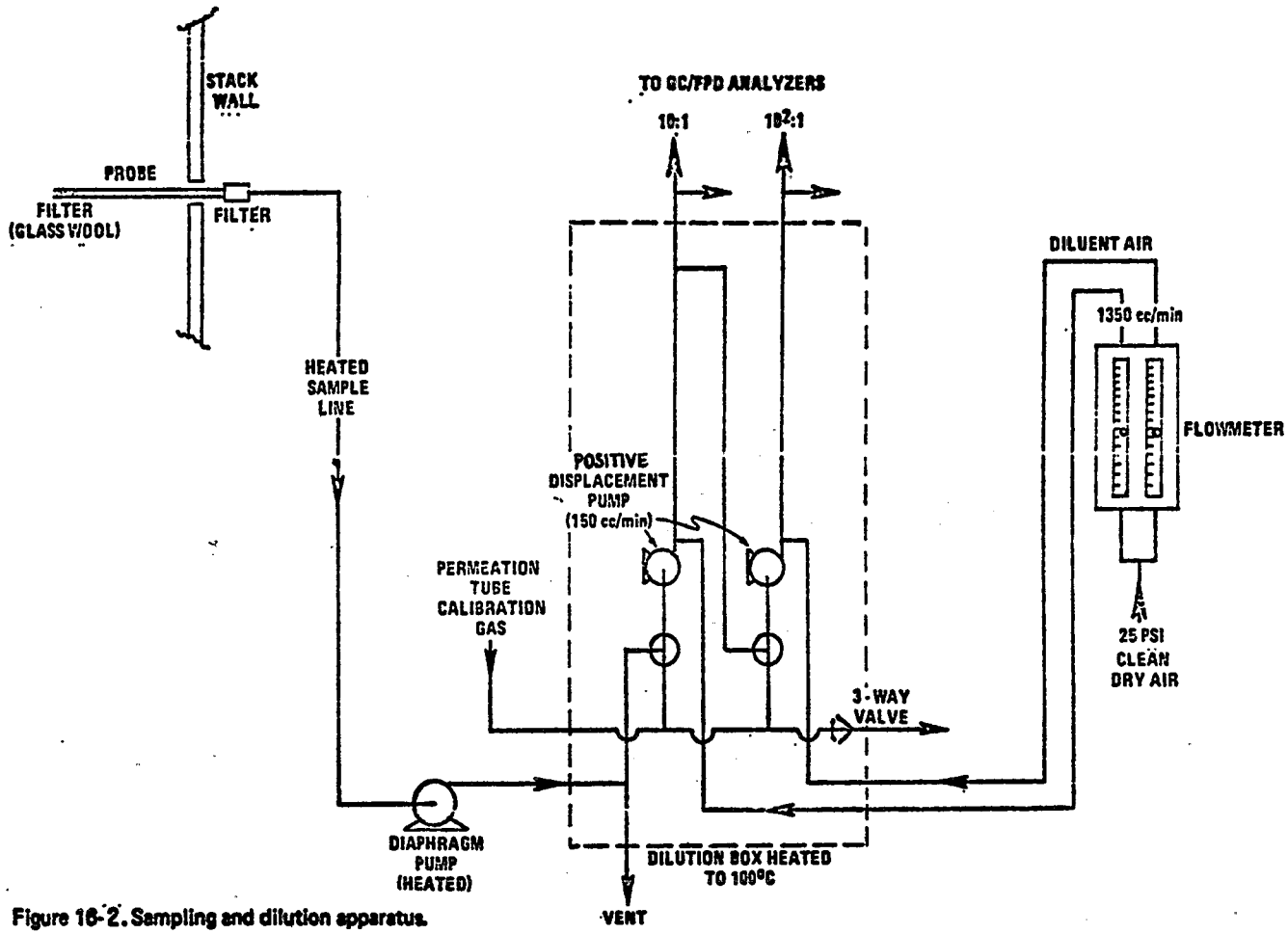

Figure 16-2. Sampling and dilution apparatus.

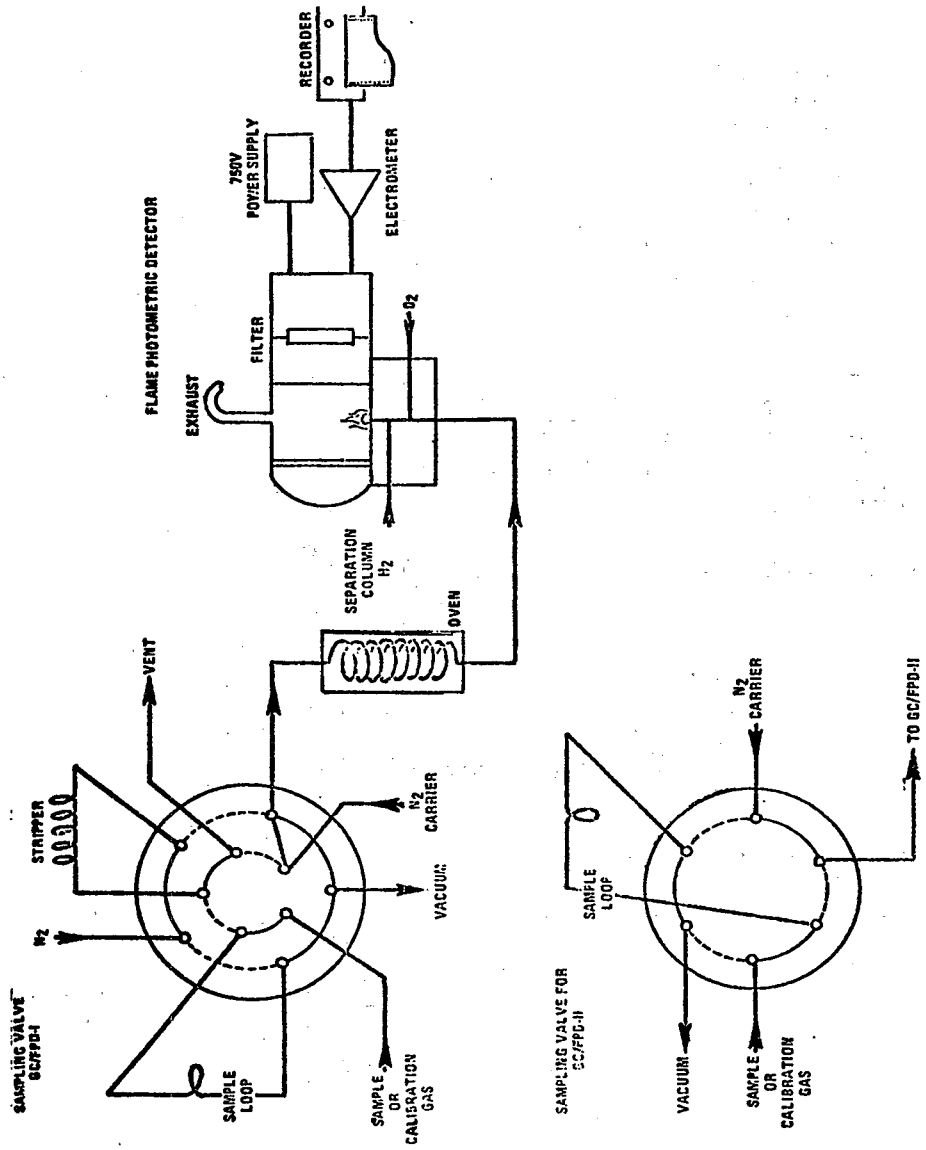

Figure 16-3. Gas chromatographic-flame photometric analyzers.

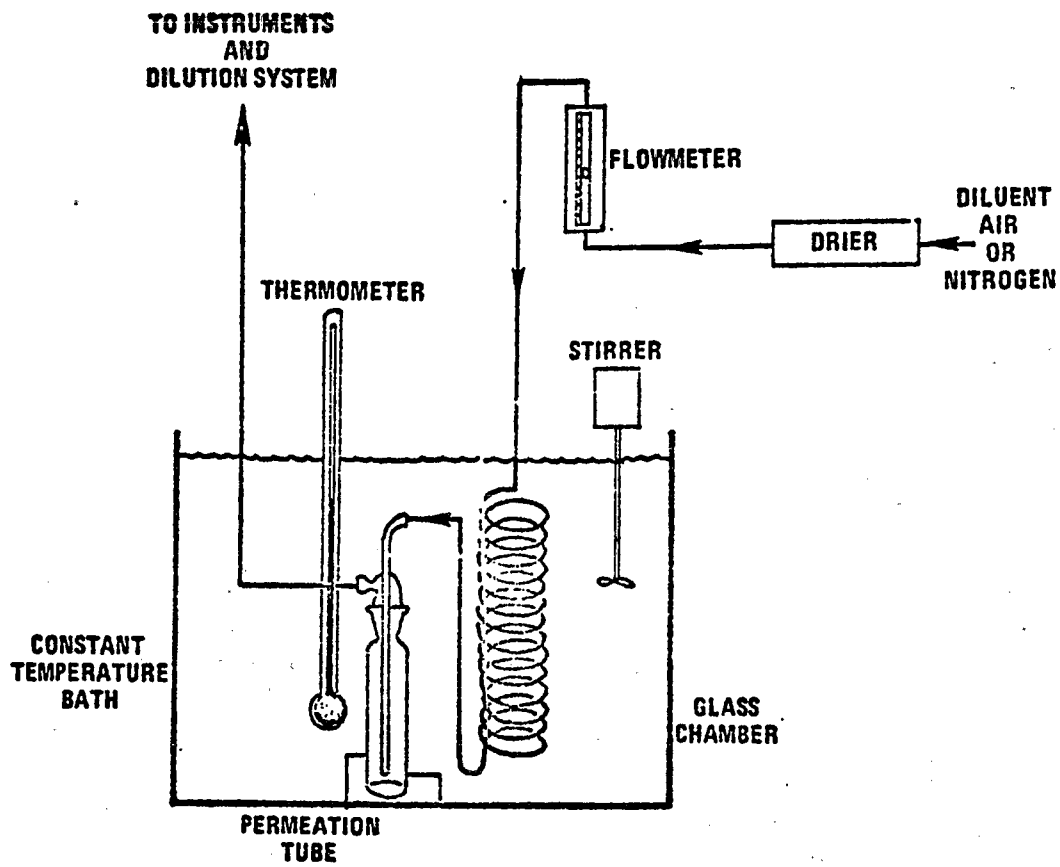

Figure 16-4. Apparatus for field calibration.

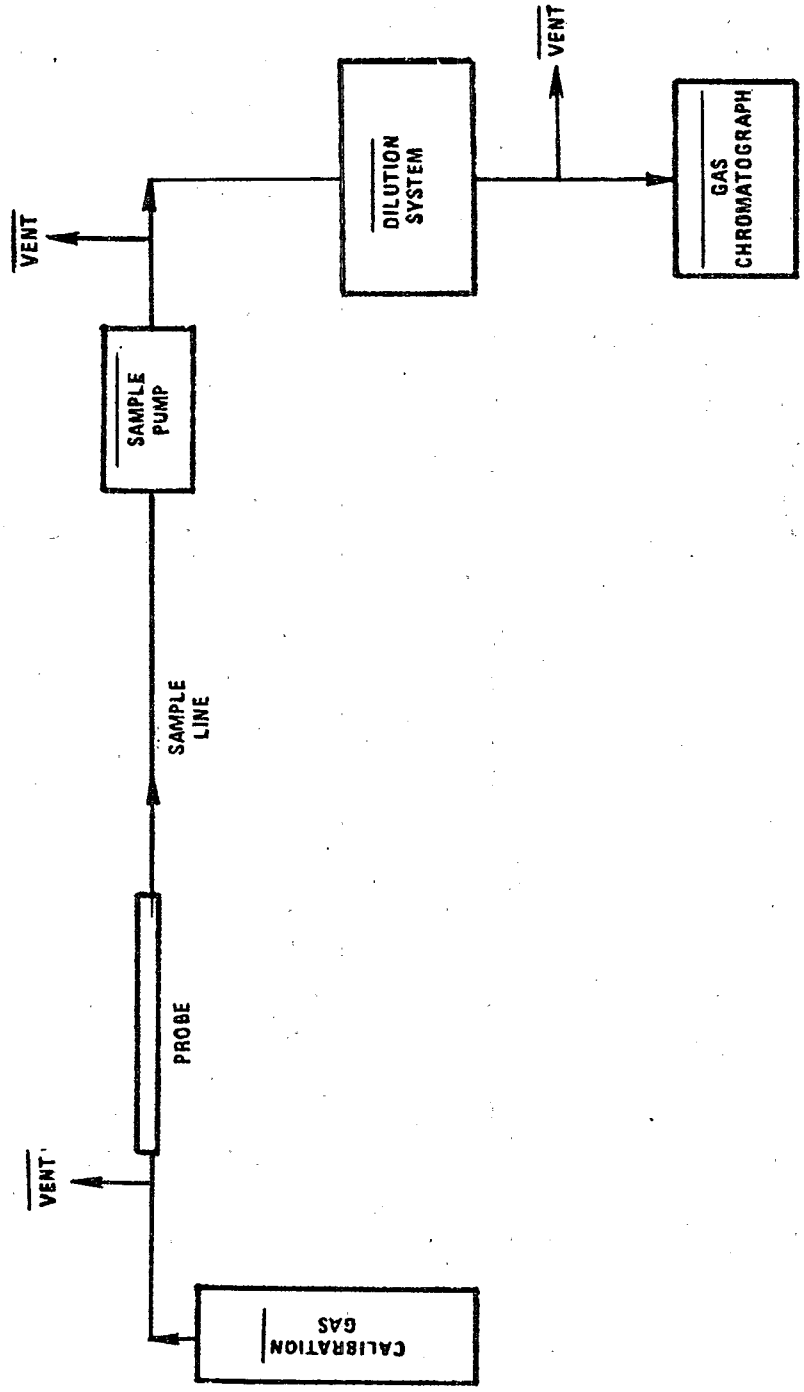

Figure 16- 5. Determination of sample line loss.

1. By revising paragraph (d)(1) of § 60.285 to read as follows:

§ 60.285 Test methods and procedures.

* * * * *

(d) * * *

(1) Method 16 or, at the discretion of the owner or operator, Method 16A for the concentration of TRS,

* * * * *

2. By amending Appendix A by adding a new method as follows:

Appendix A—Reference Methods

* * * * *

Method 16A. Determination of Total Reduced Sulfur Emissions From Stationary Sources

(Impinger Technique)

1. *Applicability and Principle*—1.1 Applicability. This is an alternative method to Method 16 for determining total reduced sulfur (TRS) compounds from recovery furnaces, lime kilns, and smelt dissolving tanks at kraft pulp mills. The TRS compounds include hydrogen sulfide, methyl mercaptan, dimethyl sulfide, dimethyl disulfide, and other reduced sulfur compounds (e.g., cabonyl sulfide, if present). Therefore, Method 16A might yield higher TRS concentrations than Method 16.

The minimum detectable limit of the method has been determined to be 0.04 ppm TRS (compounds with single sulfur atom) when sampling at 2 liters/min for 60 minutes. For an analytical accuracy of at least ±5 percent, a minimum sulfur dioxide (SO_2) mass of 500 μg should be collected. The upper concentration limit of the method generally exceeds all encountered TRS levels from kraft pulp mills.

1.2 Principle. A gas sample is extracted from the sampling point in the stack. SO_2 is selectively removed from the sample using a citrate buffer solution. Then reduced sulfur compounds are oxidized and analyzed as SO_2 using the barium-thorin titration procedure of Method 6.

2. *Apparatus*—2.1 Sampling. The sampling train is shown in Figure 16A-1. The apparatus is the same as listed in Method 6, except as listed below. Other designs are acceptable provided that the sampling system meets the performance check of Section 5.

2.1.1 SO_2 Scrubber. Two midget impingers in series packed with glass wool to eliminate entrained mist and charged with potassium citrate-citric acid buffer.

2.1.2 Combustion Tube. Quartz glass with an expanded combustion chamber of 22 to 25 mm and at least 30.5 cm long. The tube ends shall have an outside diameter of about 6 mm to accept Teflon tubing or Swagelok fittings.

2.1.3 Combustion Tube Furnace. A furnace of sufficient size to enclose the combustion chamber of the combustion tube with a temperature regulator capable of maintaining the temperature at 815 ±15°C.

2.1.4 Rate Meters. Rotameters, or equivalent, capable of measuring flow rate to within 2 percent of the selected flow rate.

2.1.5 Probe Brush. Nylon bristle brush with stainless steel wire handle. The brush shall be properly sized and shaped and of sufficient length to brush out the entire length of the probe.

2.2 Sample Recovery. Same as in Method 6, Section 2.2.

2.3 Analysis. Same as in Method 6, Section 2.3, except a 10-ml buret with 0.1-ml graduations is required and the spectrophotometer is not needed.

3. *Reagents*—Unless otherwise indicated, all reagents must conform to the specifications established by the Committee on Analytical Reagents of the American Chemical Society. Where such specifications are not available, use the best available grade.

3.1 Sampling. The following reagents are needed;

3.1.1 Water. Same as Method 6, Section 3.1.1.

3.1.2 Hydrogen Peroxide, 3 percent. Same as Method 6, Section 3.1.3 (40 Ml is needed per sample).

3.1.3 Citrate Buffer. Dissolve 300 g of potassium citrate (or 284 g of sodium citrate) and 41 g of anhydrou citric acid in 1 liter of deionized distilled water.

3.1.4 Calibration Gas. Hydrogen sulfide in nitrogen (30 to 50 ppm) stored in aluminum cylinders. Verify the concentration by Method 11.

3.1.5 Combustion Gas. Air or oxygen containing less than 50 ppb total sulfur compounds and less than 10 ppm total hydrocarbons.

3.2 Sample Recovery and Analysis. Deionized distilled water (as in 3.1.1) and the same reagents as in Method 6, Section 3.3, are required.

4. *Procedure*—4.1 Sampling.

4.1.1 Preparation of Collection Train. For the SO_2 scrubber, measure 20 ml citrate buffer solution into each of two midget impingers with glass wool packed in top. For the Method 6 part of the train, measure 20 ml of 3 percent hydrogen peroxide into each of the first two midget impingers. Leave the final midget impinger dry. Assemble the train as shown in figure 16A-1. Place the SO_2 scrubber as close to the stack wall as practical. Adjust the probe heater to a temperature sufficient to prevent water condensation. Maintain the oxidation furnace at 815°C. Place crushed ice and water around the impingers.

BILLING CODE 6560-26-M

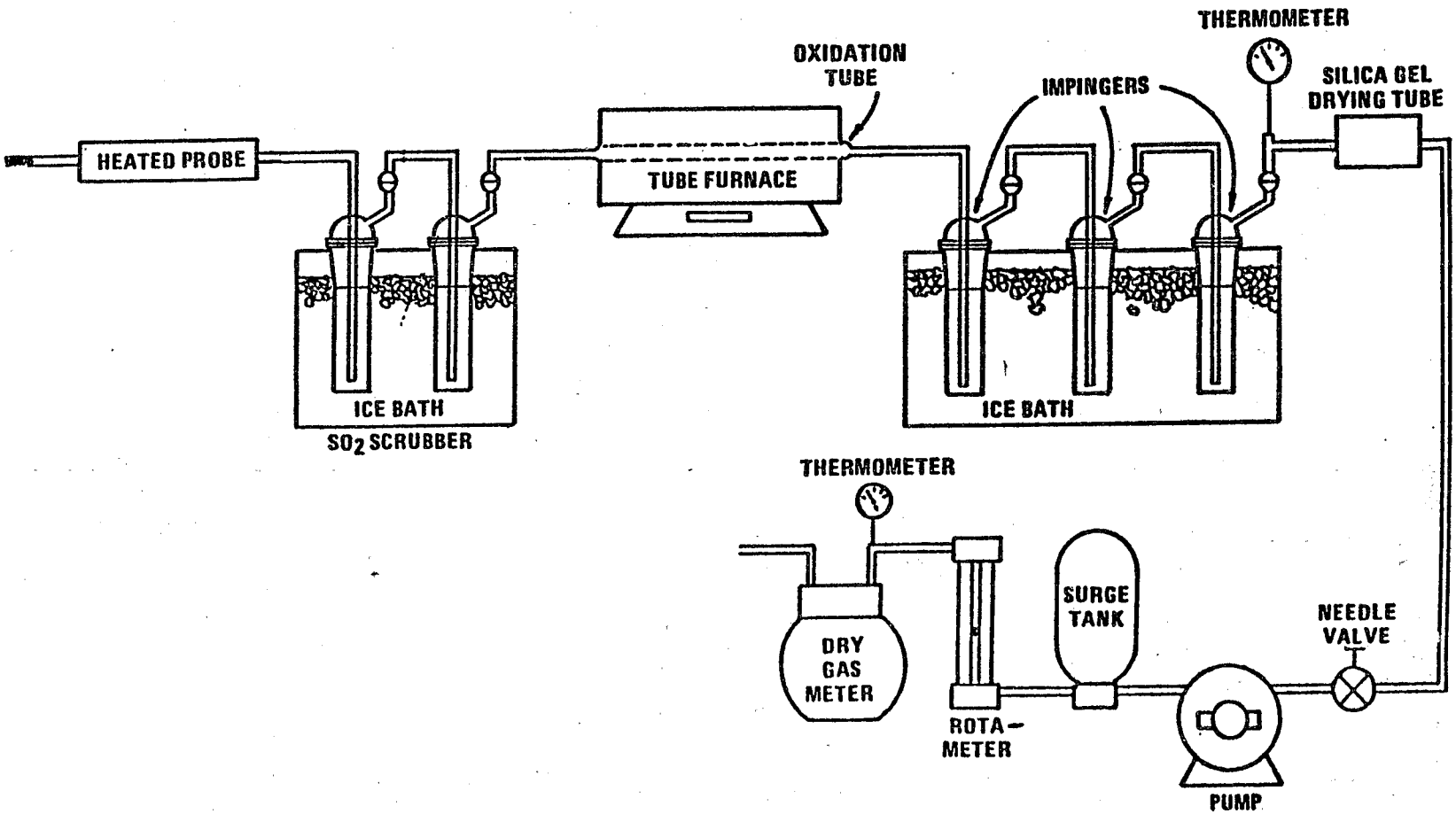

Figure 16A-1. Sampling train

4.1.2 Leak-Check Procedure. Same as Method 6, Section 4.1.2.

4.1.3 Sample Collection. Same as Method 6, Section 4.1.3, except for the following: Adjust the sample flow to a constant rate of approximately 2.0 liters/min (±10 percent) as indicated by the rotameter. Other constant flow rates may also be used provided its acceptability is checked as in Section 5. Collect the sample for 60 minutes. The 15-minute purge of the train following collection need not be performed.

In Method 16, a sample run is composed of 16 individual analyses (injects) performed over a period of not less than 3 hours or more than 6 hours. For Method 16A to be consistent with Method 16, the following may be used to obtain a sample run: (1) collect three 60-minute samples or (2) collect one 3-hour sample with a total gas sample volume of 120 liters either intermittently (equal samples, equally spaced) or continuously over 3 hours.

After collecting the sample, disconnect the probe and tubing from the SO_2 scrubber and allow to cool. Before conducting the next run, do the following. Clean the inside surface of the probe using a nylon brush and deionized distilled water from a wash bottle until the rinse shows no visible particles. Replace the probe filter. Thoroughly rinse the sample line connecting the probe to the scrubber until all visible particles are removed.

4.2 Sample Recovery. Disconnect the impingers. Replace the SO_2 scrubber contents and the glass wool if saturated with solution for subsequent runs. Pour the contents of the midget impingers of the Method 6 part of the train into a leak-free polyethylene bottle for shipment. Rinse the three midget impingers, the connecting tubes, and the sample line between the furnace and the first impinger with deionized distilled water, and add the washings to the same storage container. Mark the fluid level. Seal and identify the sample container.

4.3 Sample Analysis. Note level of liquid in container, and confirm whether any sample was lost during shipment; note this on analytical data sheet. If a noticeable amount of leakage has occurred, either void the sample or use methods, subject to the approval of the Administrator, to correct the final results.

Transfer the contents of the storage container to a 100-ml graduated cylinder. Rinse the container with deionized distilled water and add to the cylinder. Measure the volume, and pour into a 250-ml Erlenmeyer flask. Using the cylinder, add sufficient 100 percent isopropanol to give a final sample concentration of 80 percent (v/v) isopropanol. Add four to six drops of thorin indicator and titrate to a pink end point using 0.0100N barium perchlorate. Run a blank with each series of samples.

Note.—Protect the 0.0100 N barium perchlorate solution from evaporation at all times.

5. *Calibration*—5.1 Metering System, Thermometers, Rotameters, Barometer, and Barium Perchlorate Solution. Follow the same calibration procedure as in Method 6, Sections 5.1 to 5.5, respectively.

5.2 System Performance Check. Using H_2S cylinder gas and combustion gas (as specified in Sections 3.1.4 and 3.1.5), generate a series of samples in the suspected concentration range of TRS in the stack. Using the set-up shown in Figure 16A-2, take at least two 30-minute samples to determine system performance efficiency. Use the cylinder regulator to set the combustion gas rotameter flow rate to the desired level. Adjust the H_2S regulator to a slightly higher than desired flow rate to ensure excess gas for the system. With the pump valve completely closed, turn on the pump and open the valve slowly until a 2 liter/min flow rate (or other selected flow rate) is obtained. Observe the pressure control vessel while opening the valve and during the sampling run to maintain an excess flow. The samples must be transported through the entire sampling system in the normal manner. Compare the resulting measured concentration to the known concentration by subtracting the corrected volume of combustion gas from the corrected total sample volume and treating as in Section 6.3. The sampling system is considered acceptable when two consecutive samples of calibration gas produce results which do not vary by more than ±5 percent from their mean, and this mean value is within ±15 percent of the known value.

BILLING CODE 6560-26-M

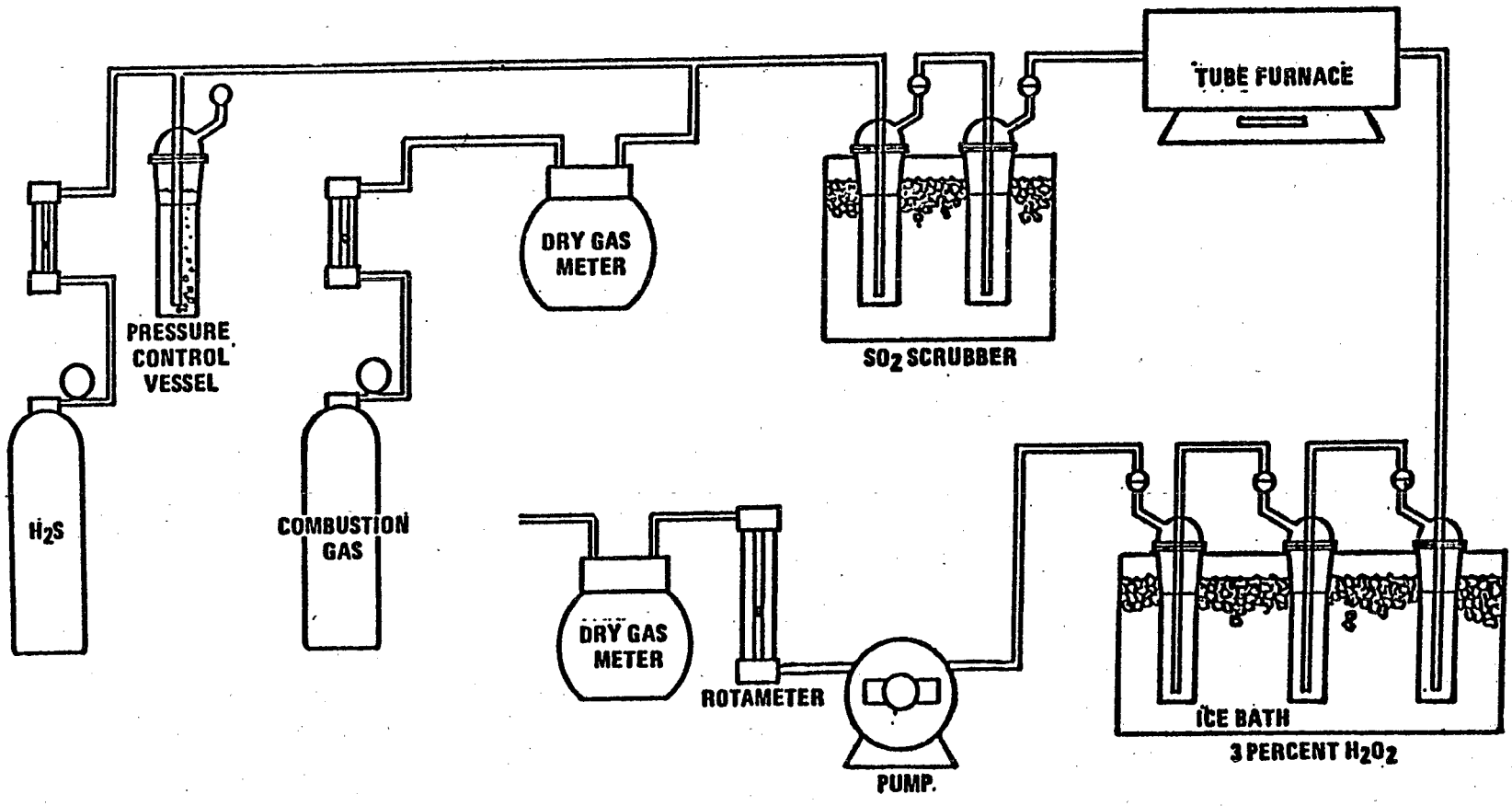

Figure 16A-2. Calibration System

Conduct this performance check before the test to validate the test procedure, sampling system and tester. In addition, field validation samples shall be taken to monitor losses in the probe due to absorption by stack components. Perform this test by collecting a known H_2S sample (in the applicable concentration range) after each third field sample and before cleaning the probe. Introduce the gas into the probe and collect in the usual manner. The obtained concentration shall be within ±15 percent of the known value. Otherwise, void the previous three samples or make corrections by dividing the sample concentration by the fraction of recovery if the losses are between 0-20 percent. Substitute a field audit sample for one known sample during the collection period if available. Such audit samples are usually available from the Quality Assurance Division, Environmental Monitoring Systems Laboratory, U.S. Environmental Protection Agency, Research Triangle Park, North Carolina 27711.

6. *Calculations*—Carry out calculations, retaining at least one extra decimal figure beyond that of the acquired data. Round off figures after final calculation.

6.1 Standard Dry Sample Gas Volume. Using Equation 6-1 of Method 6, calculate the dry sample gas volume $V_{m(std)}$ at standard conditions.

6.2 TRS Concentration as SO_2. Calculate the TRS concentration in ppm as SO_2 by using Equation 6-2 of Method 6, except use $KSO_x = 12.020\mu/meq$.

7. *Bibliography*—7.1 Curtis, F. and G.D. McAlister. Development and Evaluation of an Oxidation/Method 6 TRS Emission Sampling Procedure. Emission Measurement Branch, Emission Standards and Engineering Division, OAQPS, Environmental Protection Agency, Research Triangle Park, North Carolina 27711. February 1980.

7.2 Blosser, R.O., H.S. Oglesby, and A.K. Jain. A Study of Alternate SO_2 Scrubber Designs Used for TRS Monitoring. A Special Report by the National Council of the Paper Industry for Air and Stream Improvement, Inc., New York, N.Y. July 1977.

7.3 Gellma, I. A Laboratory and Field Study of Reduced Sulfur Sampling and Monitoring Systems. Atmospheric Quality Improvement Technical Bulletin No. 81. National Council of the Paper Industry for Air and Stream Improvement, Inc., New York, N.Y. October 1975.

7.4 Annual Book of ASTM Standards. Part 31; Water, Atmospheric Analysis. American Society for Testing and Materials. Philadelphia, Pennsylvania, 1974. pp. 40-42.

[FR Doc. 81-18096 Filed 6-17-81; 8:45 am]
BILLING CODE 6560-26-M

APPENDIX D

EPA REFERENCE METHOD 6

METHOD 6—DETERMINATION OF SULFUR DIOXIDE EMISSIONS FROM STATIONARY SOURCES

1. *Principle and Applicability*

1.1 Principle. A gas sample is extracted from the sampling point in the stack. The sulfuric acid mist (including sulfur trioxide) and the sulfur dioxide are separated. The sulfur dioxide fraction is measured by the barium-thorin titration method.

1.2 Applicability. This method is applicable for the determination of sulfur dioxide emissions from stationary sources. The minimum detectable limit of the method has been determined to be 3.4 milligrams (mg) of SO_2/m^3 (2.12×10^{-7} lb/ft^3). Although no upper limit has been established, tests have shown that concentrations as high as 80,000 mg/m^3 of SO_2 can be collected efficiently in two midget impingers, each containing 15 milliliters of 3 percent hydrogen peroxide, at a rate of 1.0 lpm for 20 minutes. Based on theoretical calculations, the upper concentration limit in a 20-liter sample is about 93,300 mg/m$_3$.

Possible interferents are free ammonia, water-soluble cations, and fluorides. The cations and fluorides are removed by glass wool filters and an isopropanol bubbler, and hence do not affect the SO_2 analysis. When samples are being taken from a gas stream with high concentrations of very find metallic fumes (such as in inlets to control devices), a high-efficiency glass fiber filter must be used in place of the glass wool plug (i.e., the one in the probe) to remove the cation interferents.

Free ammonia interferes by reacting with SO_2 to form particulate sulfite and by reacting with the indicator. If free ammonia is present (this can be determined by knowledge of the process and noticing white particulate matter in the probe and isopropanol bubbler), alternative methods, subject to the approval of the Administrator, U.S. Environmental Protection Agency, are required.

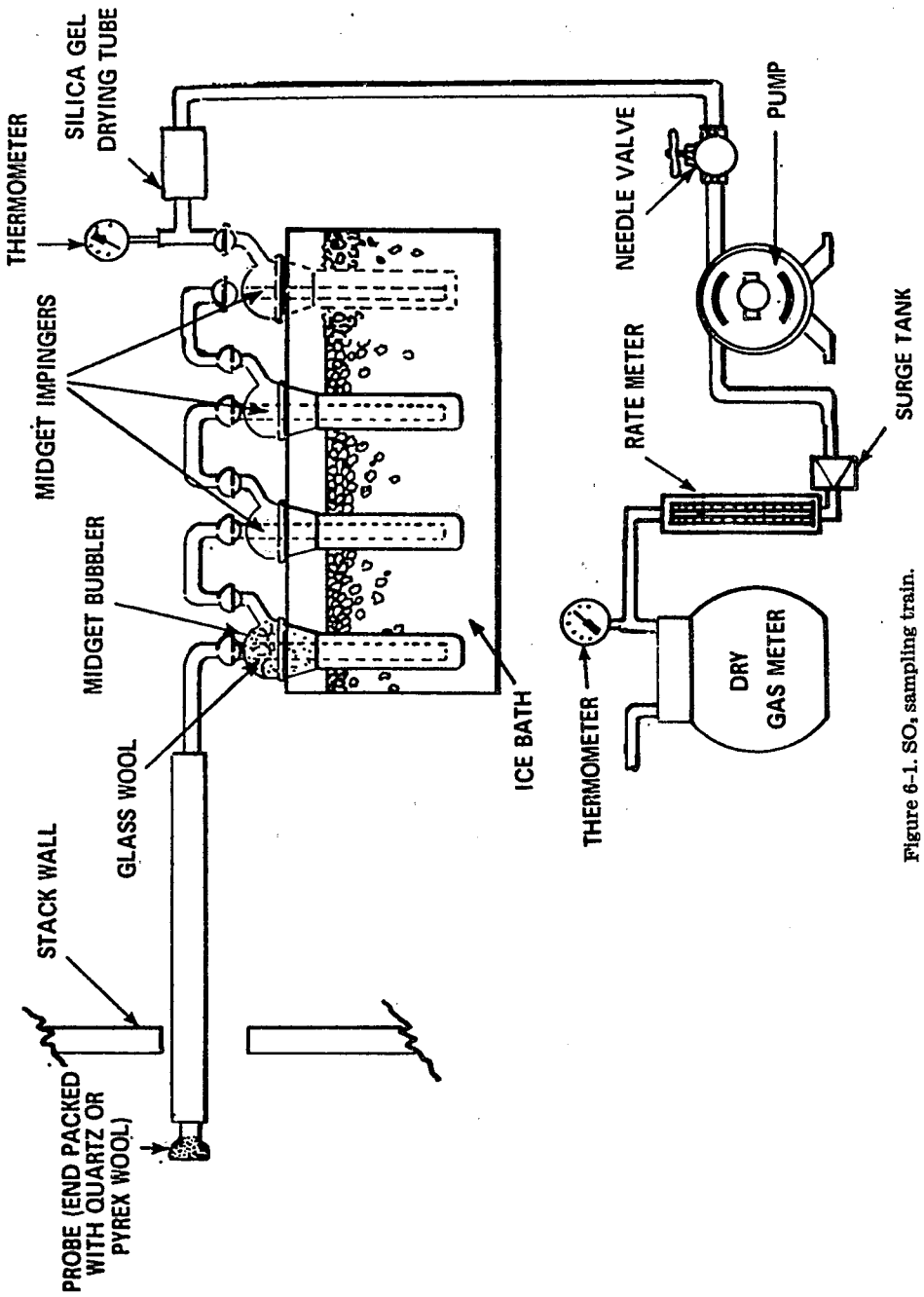

Figure 6-1. SO_2 sampling train.

2. *Apparatus*

2.1 Sampling. The sampling train is shown in Figure 6-1, and component parts are discussed below. The tester has the option of substituting sampling equipment described in Method 8 in place of the midget impinger equipment of Method 6. However, the Method 8 train must be modified to include a heated filter between the probe and isopropanol impinger, and the operation of the sampling train and sample analysis must be at the flow rates and solution volumes defined in Method 8.

The tester also has the option of determining SO_2 simultaneously with particulate matter and moisture determinations by (1) replacing the water in a Method 5 impinger system with 3 percent peroxide solution, or (2) by replacing the Method 5 water impinger system with a Method 8 isopropanol-filter-peroxide system. The analysis for SO_2 must be consistent with the procedure in Method 8.

2.1.1 Probe. Borosilicate glass, or stainless steel (other materials of construction may be used, subject to the approval of the Administrator), approximately 6-mm inside diameter, with a heating system to prevent water condensation and a filter (either in-stack or heated outstack) to remove particulate matter, including sulfuric acid mist. A plug of glass wool is a satisfactory filter.

2.1.2 Bubbler and Impingers. One midget bubbler, with medium-coarse glass frit and borosilicate or quartz glass wool packed in top (see Figure 6-1) to prevent sulfuric acid mist carryover, and three 30-ml midget impingers. The bubbler and midget impingers must be connected in series with leak-free glass connectors. silicone grease may be used, if necessary, to prevent leakage.

At the option of the tester, a midget impinger may be used in place of the midget bubbler.

Other collection absorbers and flow rates may be used, but are subject to the approval of the Administrator. Also, collection efficiency must be shown to be at least 99 percent for each test run and must be documented in the report. If the efficiency is found to be acceptable after a series of three tests, further documentation is not required. To conduct the efficiency test, an extra absorber must be added and analyzed separately. This extra absorber must not contain more than 1 percent of the total SO_2.

2.1.3 Glass Wool. Borosilicate or quartz.

2.1.4 Stopcock Grease. Acetone-insoluble, heatstable silicone grease may be used, if necessary.

2.1.5 Temperature Gauge. Dial thermometer, or equivalent, to measure temperature of gas leaving impinger train to within 1° C (2° F.)

2.1.6 Drying Tube. Tube packed with 6- to 16-mesh indicating type silica gel, or equivalent, to dry the gas sample and to protect the meter and pump. If the silica gel has been used previously, dry at 175° C (350° F) for 2 hours. New silica gel may be used as received. Alternatively, other types of decissants (equivalent or better) may be used, subject to approval of the Administrator.

2.1.7 Valve. Needle valve, to regulate sample gas flow rate.

2.1.8 Pump. Leak-free diaphragm pump, or equivalent, to pull gas through the train. Install a small surge tank between the pump and rate meter to eliminate the pulsation effect of the diaphragm pump on the rotameter.

2.1.9. Rate Meter. Rotameter, or equivalent, capable of measuring flow rate to within 2 percent of the selected flow rate of about 1000 cc/min.

2.1.10 Volume Meter. Dry gas meter, sufficiently accurate to measure the sample volume within 2 percent, calibrated at the selected flow rate and conditions actually encountered during sampling, and equipped with a temperature gauge (dial thermometer, or equivalent) capable of measuring temperature to within 3° C (5.4° F).

2.1.11 Barometer. Mercury, aneroid, or other barometer capable of measuring atmospheric pressure to within 2.5 mm Hg (0.1 in. Hg). In many cases, the barometric reading may be obtained from a nearby national weather service station, in which case the station value (which is the absolute barometric pressure) shall be requested and an adjustment for elevation differences between the weather station and sampling point shall be applied at a rate of minus 2.5 mm Hg (0.1 in. Hg) per 30 m (100 ft) elevation increase or vice versa for elevation decrease.

2.112 Vacuum Gauge and Rotameter. At least 760 mm Hg (30 in. Hg) gauge and 0-40 cc/min rotameter, to be used for leak check of the sampling train.

2.2 Sample Recovey.

2.2.1 Wash bottles. Polyethylene or glass, 500 ml, two.

2.2.2 Storage Bottles. Polyethylene, 100 ml, to store impinger samples (one per sample).

2.3 Analysis.

2.3.1 Pipettes. Volumetric type, 5-ml, 20-ml (one per sample), and 25-ml sizes.

2.3.2 Volumetric Flasks. 100-ml size (one per sample) and 1000 ml size.

2.3.3 Burettes. 5- and 50-ml sizes.

2.3.4 Erlenmeyer Flasks. 250 ml-size (one for each sample, blank, and standard).

2.3.5 Dropping Bottle. 125-ml size, to add indicator.

2.3.6 Graduated Cylinder. 100-ml size.

2.3.7 Spectrophotometer. To measure absorbance at 352 nanometers.

3. *Reagents*

Unless otherwise indicated, all reagents must conform to the specifications established by the Committee on Analytical Reagents of the American Chemical Society. Where such specifications are not available, use the best available grade.

3.1 Sampling.

3.1.1 Water. Deionized, distilled to conform to ASTM specification D1193-74, Type 3. At the option of the analyst, the $KMnO_4$ test for oxidizable organic matter may be omitted when high concentrations of organic matter are not expected to be present.

3.1.2 Isopropanol, 80 percent. Mix 80 ml of isopropanol with 20 ml of deionized, distilled water. Check each lot of isopropanol for peroxide impurities as follows: shake 10 ml of isopropanol with 10 ml of freshly prepared 10 percent potassium iodide solution. Prepare a blank by similarly treating 10 ml of distilled water. After 1 minute, read the absorbance at 352 nanometers on a spectrophotometer. If absorbance exceeds 0.1, reject alcohol for use.

Peroxides may be removed from isopropanol by redistilling or by passage through a column of activated alumina; however, reagent grade isopropanol with suitably low peroxide levels may be obtained from commercial sources. Rejection of contaminated lots may, therefore, be a more efficient procedure.

3.1.3 Hydrogen Peroxide, 3 Percent. Dilute 30 percent hydrogen peroxide 1:9 (v/v) with deionized, distilled water (30 ml is needed per sample). Prepare fresh daily.

3.1.4 Potassium Iodide Solution, 10 Percent. Dissolve 10.0 grams KI in deionized, distilled water and dilute to 100 ml. Prepare when needed.

3.2 Sample Recovery.

3.2.1 Water. Deionized, distilled, as in 3.1.1.

3.2.2 Isopropanol, 80 Percent. Mix 80 ml of isopropanol with 20 ml of deionized, distilled water.

3.3 Analysis.

3.3.1 Water. Deionized, distilled, as in 3.1.1.

3.3.2 Isopropanol, 100 percent.

3.3.3 Thorin Indicator. 1-(o-arsonophenylazo)-2-naphthol-3,6-disulfonic acid, disodium salt, or equivalent. Dissolve 0.20 g in 100 ml of deionized, distilled water.

3.3.4 Barium Perchlorate Solution, 0.0100 N. Dissolve 1.95 g of barium perchlorate trihydrate [$Ba(ClO_4)_2 \cdot 3H_2O$] in 200 ml distilled water and dilute to 1 liter with isopropanol. Alternatively, 1.22 g of [$BaCl_2 \cdot 2H_2O$] may be used instead of the perchlorate. Standardize as in Section 5.5.

3.3.5 Sulfuric Acid Standard, 0.0100 N. Purchase or standardize to ±0.0002 N against 0.0100 N NaOH which has previously been standardized against potassium acid phthalate (primary standard grade).

4. *Procedure.*

4.1 Sampling.

4.1.1 Preparation of collection train. Measure 15 ml of 80 percent isopropanol into the midget bubbler and 15 ml of 3 percent hydrogen peroxide into each of the first two midget impingers. Leave the final midget impinger dry. Assemble the train as shown in Figure 6-1. Adjust probe heater to a temperature sufficient to prevent water condensation. Place crushed ice and water around the impingers.

4.1.2 Leak-check procedure. A leak check prior to the sampling run is optional; however, a leak check after the sampling run is mandatory. The leak-check procedure is as follows:

Temporarily attach a suitable (e.g., 0-40 cc/min) rotameter to the outlet of the dry gas meter and place a vacuum gauge at or near the probe inlet. Plug the probe inlet, pull a vaccum of at least 250 mm Hg (10 in. Hg), and note the flow rate as indicated by the rotameter. A leakage rate not in excess of 2 percent of the average sampling rate is acceptable.

NOTE: Carefully release the probe inlet plug before turning off the pump.

It is suggested (not mandatory) that the pump be leak-checked separately, either prior to or after the sampling run. If done prior to the sampling run, the pump leak-check shall precede the leak check of the sampling train described immediately above; if done after the sampling run, the pump leak-check shall follow the train leak-check. To leak check the pump, proceed as follows: Disconnect the drying tube from the probe-impinger assembly. Place a vacuum gauge at the inlet to either the trying tube or the pump, pull a vacuum of 250 mm (10 in.) Hg, plug or pinch off the outlet of the flow meter and then turn off the pump. The vacuum should remain stable for at least 30 seconds.

Other leak-check procedures may be used, subject to the approval of the Adminstrator, U.S. Environmental Protection Agency.

4.1.3 Sample collection. Record the initial dry gas meter reading and barometric pressure. To begin sampling, position the tip of the probe at the sampling point, connect the probe to the bubbler, and start the pump. Adjust the sample flow to a constant rate of approximately 1.0 liter/min as indicated by the rotameter. Maintain this constant rate (±10 percent) during the entire sampling run. Take readings (dry gas meter, tempertures at dry gas meter and at impinger outlet and rate meter) at least every 5 minutes. Add more ice during the run to keep the temperture of the gases leaving the last impinger at 20° C (68° F) or less. At the conclusion of each run, turn off the pump, remove probe from the stack, and record the final readings. Conduct a leak

check as in Section 4.1.2 (This leak check is mandatory.) If a leak is found, void the test run, or use procedures acceptable to the Administrator to adjust the sample volume for the leakage. Drain the ice bath, and purge the remaining part of the train by drawing clean ambient air through the system for 15 minutes at the sampling rate.

Clean ambient air can be provided by passing air through a charcoal filter or through an extra midget impinger with 15 ml of 3 percent H_2O_2. The tester may opt to simply use ambient air, without purification.

4.2 Sample Recovery. Disconnect the impingers after purging. Discard the contents of the midget bubbler. Pour the contents of the midget impingers into a leak-free polyethylene bottle for shipment. Rinse the three midget impingers and the connecting tubes with deionized, distilled water, and add the washings to the same storage container. Mark the fluid level. Seal and identify the sample container.

4.3 Sample Analysis. Note level of liquid in container, and confirm whether any sample was lost during shipment; note this on analytical data sheet. If a noticeable amount of leakage has occurred, either void the sample or use methods, subject to the approval of the Administrator, to correct the final results.

Transfer the contents of the storage container to a 100-ml volumetric flask and dilute to exactly 100 ml with deionized, distilled water. Pipette a 20-ml aliquot of this solution into a 250-ml Erlenmeyer flask, add 80 ml of 100 percent isopropanol and two to four drops of thorin indicator, and titrate to a pink endpoint using 0.0100 N barium perchlorate. Repeat and average the titration volumes. Run a blank with each series of samples. Replicate titrations must agree within 1 percent or 0.2 ml, whichever is larger.

NOTE: Protect the 0.0100 N barium perchlorate solution from evaporation at all times.

5. *Calibration*

5.1 Metering System.

5.1.1 Initial Calibration. Before its initial use in the field, first leak check the metering system (drying tube, needle valve, pump, rotameter, and dry gas meter) as follows: place a vacuum gauge at the inlet to the drying tube and pull a vaccum of 250 mm (10 in.) Hg; plug or pinch off the outlet of the flow meter, and then turn off the pump. The vaccum shall remain stable for at least 30 seconds. Carefully release the vaccum gauge before releasing the flow meter end.

Next, calibrate the metering system (at the sampling flow rate specified by the method) as follows: connect an appropriately sized wet test meter (e.g., 1 liter per revolution) to the inlet of the drying tube. Make three independent calibration runs, using at least five revolutions of the dry gas meter per run. Calculate the calibration factor, Y (wet test meter calibration volume divided by the dry gas meter volume, both volumes adjusted to the same reference temperature and pressure), for each run, and average the results. If any Y value deviates by more than 2 percent from the average, the metering system is unacceptable for use. Otherwise, use the average as the calibration factor for subsequent test runs.

5.1.2 Post-Test Calibration Check. After each field test series, conduct a calibration check as in Section 5.1.1 above, except for the following variations: (a) the leak check is not to be conducted, (b) three, or more revolutions of the dry gas meter may be used, and (c) only two independent runs need be made. If the calibration factor does not deviate by more than 5 percent from the initial calibration factor (determined in Section 5.1.1), then the dry gas meter volumes obtained during the test series are acceptable. If the calibration factor deviates by more than 5 percent, recalibrate the metering system as in Section 5.1.1, and for the calculations, use the calibration factor (initial or recalibration) that yields the lower gas volume for each test run.

5.2 Thermometers. Calibrate against mercury-in-glass thermometers.

5.3 Rotameter. The rotameter need not be calibrated but should be cleaned and maintained according to the manufacturer's instruction.

5.4 Barometer. Calibrate against a mercury barometer.

5.5 Barium Perchlorate Solution. Standardize the barium perchlorate solution against 25 ml of standard sulfuric acid to which 100 ml of 100 percent isopropanol has been added.

6. *Calculations*

Carry out calculations, retaining at least one extra decimal figure beyond that of the acquired data. Round off figures after final calculation.

6.1 Nomenclature.

C_{SO_2}=Concentration of sulfur dioxide, dry basis corrected to standard conditions, mg/dscm (lb/dscf).

N=Normality of barium perchlorate titrant, milliequivalents/ml.

P_{bar}=Barometric pressure at the exit orifice of the dry gas meter, mm Hg (in. Hg).

P_{std}=Standard absolute pressure, 760 mm Hg (29.92 in. Hg).

T_m=Average dry gas meter absolute temperature, °K (°R).

T_{std}=Standard absolute temperature, 293° K (528° R).

V_a=Volume of sample aliquot titrated, ml.

V_m=Dry gas volume as measured by the dry gas meter, dcm (dcf).

$V_{m(std)}$=Dry gas volume measured by the dry gas meter, corrected to standard conditions, dscm (dscf).

V_{soln}=Total volume of solution in which the sulfur dioxide sample is contained, 100 ml.

V_t=Volume of barium perchlorate titrant used for the sample, ml (average or replicate titrations).

V_{tb}=Volume of barium perchlorate titrant used for the blank, ml.

Y=Dry gas meter calibration factor.

32.03=Equivalent weight of sulfur dioxide.

6.2 Dry sample gas volume, corrected to standard conditions.

$$V_{m(std)}=V_m Y\left(\frac{T_{std}}{T_m}\right)\left(\frac{P_{bar}}{P_{std}}\right)=K_1 Y\frac{V_m P_{bar}}{T_m}$$

Equation 6-1

where:

K_1=0.3858° K/mm Hg for metric units.

=17.64° R/in. Hg for English units.

6.3 Sulfur dioxide concentration.

$$C_{SO_2}=K_2\frac{(V_t-V_{tb})\,N\left(\frac{V_{soln}}{V_a}\right)}{V_{m(std)}}$$

Equation 6-2

where:

K_2=32.03 mg/meq. for metric units.

=7.061×10^{-5} lb/meq. for English units.

7. *Bibliography*

1. Atmospheric Emissions from Sulfuric Acid Manufacturing Processes. U.S. DHEW, PHS, Division of Air Pollution. Public Health Service Publication No. 999-AP-13. Cincinnati, Ohio. 1965.

2. Corbett, P. F. The Determination of SO_2 and SO_3 in Flue Gases. Journal of the Institute of Fuel. *24:* 237-243, 1961.

3. Matty, R. E. and E. K. Diehl. Measuring Flue-Gas SO_2 and SO_3. Power. *101:* 94-97. November 1957.

4. Patton, W. F. and J. A. Brink, Jr. New Equipment and Techniques for Sampling Chemical Process Gases. J. Air Pollution Control Association. *13:* 162. 1963.

5. Rom, J. J. Maintenance, Calibration, and Operation of Isokinetic Source-sampling Equipment. Office of Air Programs, Environmental Protection Agency. Research Triangle Park, N.C. APTD-0576. March 1972.

6. Hamil, H. F. and D. E. Camann. Collaborative Study of Method for the Determination of Sulfur Dioxide Emissions from Stationary Sources (Fossil-Fuel Fired Steam Generators). Environmental Protection Agency, Research Triangle Park, N.C. EPA-650/4-74-024. December 1973.

7. Annual Book of ASTM Standards. Part 31; Water, Atmospheric Analysis. American Society for Testing and Materials. Philadelphia, Pa. 1974. pp. 40-42.

8. Knoll, J. E. and M. R. Midgett. The Application of EPA Method 6 to High Sulfur Dioxide Concentrations. Environmental Protection Agency. Research Triangle Park, N.C. EPA-600/4-76-038. July 1976.

[3]Mention of trade names or specific products does not constitue endorsement by the Environmental Protection Agency.

APPENDIX E

EPA REFERENCE METHOD 9

METHOD 9—VISUAL DETERMINATION OF THE OPACITY OF EMISSIONS FROM STATIONARY SOURCES

Many stationary sources discharge visible emissions into the atmosphere; these emissions are usually in the shape of a plume. This method involves the determination of plume opacity by qualified observers. The method includes procedures for the training and certification of observers, and procedures to be used in the field for determination of plume opacity. The appearance of a plume as viewed by an observer depends upon a number of variables, some of which may be controllable and some of which may not be controllable in the field. Variables which can be controlled to an extent to which they no longer exert a significant influence upon plume appearance include: Angle of the observer with respect to the plume; angle of the observer with respect to the sun; point of observation of attached and detached steam plume; and angle of the observer with respect to a plume emitted from a rectangular stack with a large length to width ratio. The method includes specific criteria applicable to these variables.

Other variables which may not be controllable in the field are luminescence and color contrast between the plume and the background against which the plume is viewed. These variables exert an influence upon the appearance of a plume as viewed by an observer, and can affect the ability of the observer to accurately assign opacity values to the observed plume. Studies of the theory of plume opacity and field studies have demonstrated that a plume is most visible and presents the greatest apparent opacity when viewed against a contrasting background. It follows from this, and is confirmed by field trials, that the opacity of a plume, viewed under conditions where a contrasting background is present can be assigned with the greatest degree of accuracy. However, the potential for a positive error is also the greatest when a plume is viewed under such contrasting conditions. Under conditions presenting a less contrasting background, the apparent opacity of a plume is less and approaches zero as the color and luminescence contrast decrease toward zero. As a result, significant negative bias and negative errors can be made when a plume is viewed under less contrasting conditions. A negative bias decreases rather than increases the possibility that a plant operator will be cited for a violation of opacity standards due to observer error.

Studies have been undertaken to determine the magnitude of positive errors which can be made by qualified observers while reading plumes under contrasting conditions and using the procedures set forth in this method. The results of these studies (field trials) which involve a total of 769 sets of 25 readings each are as follows:

(1) For black plumes (133 sets at a smoke generator), 100 percent of the sets were read with a positive error[1] of less than 7.5 per-

[1]For a set, positive error = average opacity determined by observers' 25 observa-

Continued

cent opacity; 99 percent were read with a positive error of less than 5 percent opacity.

(2) For white plumes (170 sets at a smoke generator, 168 sets at a coal-fired power plant, 298 sets at a sulfuric acid plant), 99 percent of the sets were read with a positive error of less than 7.5 percent opacity; 95 percent were read with a positive error of less than 5 percent opacity.

The positive observational error associated with an average of twenty-five readings is therefore established. The accuracy of the method must be taken into account when determining possible violations of applicable opacity standards.

1. *Principle and applicability.*

1.1 Principle. The opacity of emissions from stationary sources is determined visually by a qualified observer.

1.2 Applicability. This method is applicable for the determination of the opacity of emissions from stationary sources pursuant to § 60.11(b) and for qualifying observers for visually determining opacity of emissions.

2. *Procedures.* The observer qualified in accordance with paragraph 3 of this method shall use the following procedures for visually determining the opacity of emissions:

2.1 Position. The qualified observer shall stand at a distance sufficient to provide a clear view of the emissions with the sun oriented in the 140° sector to his back. Consistent with maintaining the above requirement, the observer shall, as much as possible, make his observations from a position such that his line of vision is approximately perpendicular to the plume direction, and when observing opacity of emissions from rectangular outlets (e.g. roof monitors, open baghouses, noncircular stacks), approximately perpendicular to the longer axis of the outlet. The observer's line of sight should not include more than one plume at a time when multiple stacks are involved, and in any case the observer should make his observations with his line of sight perpendicular to the longer axis of such a set of multiple stacks (e.g. stub stacks on baghouses).

2.2 Field records. The observer shall record the name of the plant, emission location, type facility, observer's name and affiliation, and the date on a field data sheet (Figure 9-1). The time, estimated distance to the emission location, approximate wind direction, estimated wind speed, description of the sky condition (presence and color of clouds), and plume background are recorded on a field data sheet at the time opacity readings are initiated and completed.

2.3 Observations. Opacity observations shall be made at the point of greatest opacity in that portion of the plume where condensed water vapor is not present. The observer shall not look continuously at the plume, but instead shall observe the plume momentarily at 15-second intervals.

2.3.1 Attached steam plumes. When condensed water vapor is present within the plume as it emerges from the emission outlet, opacity observations shall be made beyond the point in the plume at which condensed water vapor is no longer visible. The observer shall record the approximate distance from the emission outlet to the point in the plume at which the observations are made.

2.3.2 Detached steam plume. When water vapor in the plume condenses and becomes visible at a distinct distance from the emission outlet, the opacity of emissions should be evaluated at the emission outlet prior to the condensation of water vapor and the formation of the steam plume.

2.4 Recording observations. Opacity observations shall be recorded to the nearest 5 percent at 15-second intervals on an observational record sheet. (See Figure 9-2 for an example.) A minimum of 24 observations shall be recorded. Each momentary observation recorded shall be deemed to represent the average opacity of emissions for a 15-second period.

2.5 Data Reduction. Opacity shall be determined as an average of 24 consecutive observations recorded at 15-second intervals. Divide the observations recorded on the record sheet into sets of 24 consecutive observations. A set is composed of any 24 consecutive observations. Sets need not be consecutive in time and in no case shall two sets overlap. For each set of 24 observations, calculate the average by summing the opacity of the 24 observations and dividing this sum by 24. If an applicable standard specifies an averaging time requiring more than 24 observations, calculate the average for all observations made during the specified time period. Record the average opacity on a record sheet. (See Figure 9-1 for an example.)

3. *Qualifications and testing.*

3.1 Certification requirements. To receive certification as a qualified observer, a candidate must be tested and demonstrate the ability to assign opacity readings in 5 percent increments to 25 different black plumes and 25 different white plumes, with an error not to exceed 15 percent opacity on any one reading and an average error not to exceed 7.5 percent opacity in each category. Candidates shall be tested according to the procedures described in paragraph 3.2. Smoke generators used pursuant to paragraph 3.2 shall be equipped with a smoke meter which meets the requirements of paragraph 3.3.

The certification shall be valid for a period of 6 months, at which time the quali-

---

tions—average opacity determined from transmissometer's 25 recordings.

fication procedure must be repeated by any observer in order to retain certification.

3.2 Certification procedure. The certification test consists of showing the candidate a complete run of 50 plumes—25 black plumes and 25 white plumes—generated by a smoke generator. Plumes within each set of 25 black and 25 white runs shall be presented in random order. The candidate assigns an opacity value to each plume and records his observation on a suitable form. At the completion of each run of 50 readings, the score of the candidate is determined. If a candidate fails to qualify, the complete run of 50 readings must be repeated in any retest. The smoke test may be administered as part of a smoke school or training program, and may be preceded by training or familiarization runs of the smoke generator during which candidates are shown black and white plumes of known opacity.

3.3 Smoke generator specifications. Any smoke generator used for the purposes of paragraph 3.2 shall be equipped with a smoke meter installed to measure opacity across the diameter of the smoke generator stack. The smoke meter output shall display instack opacity based upon a pathlength equal to the stack exit diameter, on a full 0 to 100 percent chart recorder scale. The smoke meter optical design and performance shall meet the specifications shown in Table 9-1. The smoke meter shall be calibrated as prescribed in paragraph 3.3.1 prior to the conduct of each smoke reading test. At the completion of each test, the zero and span drift shall be checked and if the drift exceeds ±1 percent opacity, the condition shall be corrected prior to conducting any subsequent test runs. The smoke meter shall be demonstrated, at the time of installation, to meet the specifications listed in Table 9-1. This demonstration shall be repeated following any subsequent repair or replacement of the photocell or associated electronic circuitry including the chart recorder or output meter, or every 6 months, whichever occurs first.

TABLE 9-1—SMOKE METER DESIGN AND PERFORMANCE SPECIFICATIONS

Parameter	Specification
a. Light source	Incandescent lamp operated at nominal rated voltage.
b. Spectral response of photocell.	Photopic (daylight spectral response of the human eye—reference 4.3).
c. Angle of view	15° maximum total angle.
d. Angle of projection	15° maximum total angle.
e. Calibration error	±3% opacity, maximum.
f. Zero and span drift±1% opacity, 30 minutes.	
g. Response time	5 seconds.

3.3.1 Calibration. The smoke meter is calibrated after allowing a minimum of 30 minutes warmup by alternately producing simulated opacity of 0 percent and 100 percent. When stable response at 0 percent or 100 percent is noted, the smoke meter is adjusted to produce an output of 0 percent or 100 percent, as appropriate. This calibration shall be repeated until stable 0 percent and 100 percent readings are produced without adjustment. Simulated 0 percent and 100 percent opacity values may be produced by alternately switching the power to the light source on and off while the smoke generator is not producing smoke.

3.3.2 Smoke meter evaluation. The smoke meter design and performance are to be evaluated as follows:

3.3.2.1 Light source. Verify from manufacturer's data and from voltage measurements made at the lamp, as installed, that the lamp is operated within ±5 percent of the nominal rated voltage.

3.3.2.2 Spectral response of photocell. Verify from manufacturer's data that the photocell has a photopic response; i.e., the spectral sensitivity of the cell shall closely approximate the standard spectral-luminosity curve for photopic vision which is referenced in (b) of Table 9-1.

FIGURE 9-1
RECORD OF VISUAL DETERMINATION OF OPACITY

PAGE____of____

COMPANY_____
LOCATION_____
TEST NUMBER_____
DATE_____
TYPE FACILITY_____
CONTROL DEVICE_____

HOURS OF OBSERVATION_____
OBSERVER_____
OBSERVER CERTIFICATION DATE_____
OBSERVER AFFILIATION_____
POINT OF EMISSIONS_____
HEIGHT OF DISCHARGE POINT_____

	Initial			Final
CLOCK TIME				
OBSERVER LOCATION Distance to Discharge				
Direction from Discharge				
Height of Observation Point				
BACKGROUND DESCRIPTION				
WEATHER CONDITIONS Wind Direction				
Wind Speed				
Ambient Temperature				
SKY CONDITIONS (clear, overcast, % clouds, etc.)				
PLUME DESCRIPTION Color				
Distance Visible				
OTHER INFORMATION				

SUMMARY OF AVERAGE OPACITY

Set Number	Time	Opacity	
	Start--End	Sum	Average

Readings ranged from ____ to ____ % opacity

The source was/was not in compliance with ____ at the time evaluation was made.

FIGURE 9-2 OBSERVATION RECORD PAGE ___ OF ___

COMPANY _____
LOCATION _____
TEST NUMBER _____
DATE _____

OBSERVER _____
TYPE FACILITY _____
POINT OF EMISSIONS _____

Hr.	Min.	Seconds 0	15	30	45	STEAM PLUME (check if applicable) Attached	Detached	COMMENTS
	0							
	1							
	2							
	3							
	4							
	5							
	6							
	7							
	8							
	9							
	10							
	11							
	12							
	13							
	14							
	15							
	16							
	17							
	18							
	19							
	20							
	21							
	22							
	23							
	24							
	25							
	26							
	27							
	28							
	29							

3.3.2.3 Angle of view. Check construction geometry to ensure that the total angle of view of the smoke plume, as seen by the photocell, does not exceed 15°. The total angle of view may be calculated from: $=2 \tan^{-1} d/2L$, where θ=total angle of view; d=the sum of the photocell diameter+the diameter of the limiting aperture; and L=the distance from the photocell to the limiting aperture. The limiting aperture is the point in the path between the photocell and the smoke plume where the angle of view is most restricted. In smoke generator smoke meters this is normally an orifice plate.

3.3.2.4 Angle of projection. Check construction geometry to ensure that the total angle of projection of the lamp on the smoke plume does not exceed 15°. The total angle of projection may be calculated from:

$\theta = 2 \tan^{-1} d/2L$, where θ= total angle of projection; d= the sum of the length of the lamp filament + the diameter of the limiting aperture; and L= the distance from the lamp to the limiting aperture.

FIGURE 9-2 OBSERVATION RECORD (Continued) PAGE ___ OF ___

COMPANY _____
LOCATION _____
TEST NUMBER _____
DATE _____

OBSERVER _____
TYPE FACILITY _____
POINT OF EMISSIONS _____

Hr.	Min.	Seconds 0	15	30	45	STEAM PLUME (check if applicable) Attached	Detached	COMMENTS
	30							
	31							
	32							
	33							
	34							
	35							
	36							
	37							
	38							
	39							
	40							
	41							
	42							
	43							
	44							
	45							
	46							
	47							
	48							
	49							
	50							
	51							
	52							
	53							
	54							
	55							
	56							
	57							
	58							
	59							

3.3.2.5 Calibration error. Using neutral-density filters of known opacity, check the error between the actual response and the theoretical linear response of the smoke meter. This check is accomplished by first calibrating the smoke meter according to 3.3.1 and then inserting a series of three neutral-density filters of nominal opacity of 20, 50, and 75 percent in the smoke meter pathlength. Filters calibrated within ±2 percent shall be used. Care should be taken when inserting the filters to prevent stray

light from affecting the meter. Make a total of five nonconsecutive readings for each filter. The maximum error on any one reading shall be 3 percent opacity.

3.3.2.6 Zero and span drift. Determine the zero and span drift by calibrating and operating the smoke generator in a normal manner over a 1-hour period. The drift is measured by checking the zero and span at the end of this period.

3.3.2.7 Response time. Determine the response time by producing the series of five simulated 0 percent and 100 percent opacity values and observing the time required to reach stable response. Opacity values of 0 percent and 100 percent may be simulated by alternately switching the power to the light source off and on while the smoke generator is not operating.

4. *References.*

4.1 Air Pollution Control District Rules and Regulations, Los Angeles County Air Pollution Control District, Regulation IV, Prohibitions, Rule 50.

4.2 Weisburd, Melvin I., Field Operations and Enforcement Manual for Air, U.S. Environmental Protection Agency, Research Triangle Park, N.C., APTD-1100, August 1972, pp. 4.1-4.36.

4.3 Condon, E.U., and Odishaw, H., Handbook of Physics, McGraw-Hill Co., N.Y., N.Y., 1958, Table 3.1, p. 6-52.

*U.S. GOVERNMENT PRINTING OFFICE: 1983—639-001/3000

TECHNICAL REPORT DATA
(Please read Instructions on the reverse before completing)

1. REPORT NO. EPA-340/1-83-017	2.	3. RECIPIENT'S ACCESSION NO.
4. TITLE AND SUBTITLE Kraft Pulp Mill Inspection Guide		5. REPORT DATE February 1983 (preparation)
		6. PERFORMING ORGANIZATION CODE
7. AUTHOR(S) Ronald Hawks/Gary Saunders		8. PERFORMING ORGANIZATION REPORT NO.
9. PERFORMING ORGANIZATION NAME AND ADDRESS PEDCo Environmental, Inc. 505 S. Duke St., Suite 503 Durham, North Carolina 27701		10. PROGRAM ELEMENT NO.
		11. CONTRACT/GRANT NO. 68-01-6310 Task No. 65
12. SPONSORING AGENCY NAME AND ADDRESS U.S. Environmental Protection Agency Stationary Source Compliance Division Washington, D.C. 20460		13. TYPE OF REPORT AND PERIOD COVERED Final report
		14. SPONSORING AGENCY CODE

15. SUPPLEMENTARY NOTES

EPA Project Officer for this report was Robert Marshall, telephone: (202) 382-2862

16. ABSTRACT

This manual presents technical data on kraft pulp mill processes and control equipment design and application. The manual also includes inspection checklists for use by agency personnel in evaluating process parameters and control equipment operating conditions. Major emphasis is placed on baseline analyses and detection and elimination of operation- and maintenance-related problems.

17. KEY WORDS AND DOCUMENT ANALYSIS

a. DESCRIPTORS	b. IDENTIFIERS/OPEN ENDED TERMS	c. COSATI Field/Group
Operation and maintenance Kraft pulp mills Particulate TR 5 Recovery boilers Lime kilns		

18. DISTRIBUTION STATEMENT Unlimited	19. SECURITY CLASS *(This Report)* Unclassified	21. NO. OF PAGES 405
	20. SECURITY CLASS *(This page)* Unclassified	22. PRICE

EPA Form 2220-1 (Rev. 4-77) PREVIOUS EDITION IS OBSOLETE

United States
Environmental Protection
Agency

Office of Air Quality Planning and Standards
Stationary Source Compliance Division
Washington D.C. 20460

Publication No. EPA-340/1-83-017

Official Business
Penalty for Private Use
$300

Postage and
Fees Paid
Environmental
Protection
Agency
EPA 335

If your address is incorrect, please change on the above label; tear off; and return to the above address.
If you do not desire to continue receiving this technical report series, CHECK HERE ☐ ; tear off label; and return it to the above address.