December 2001 EPA 744-R-01-004b

# Desktop Computer Displays:

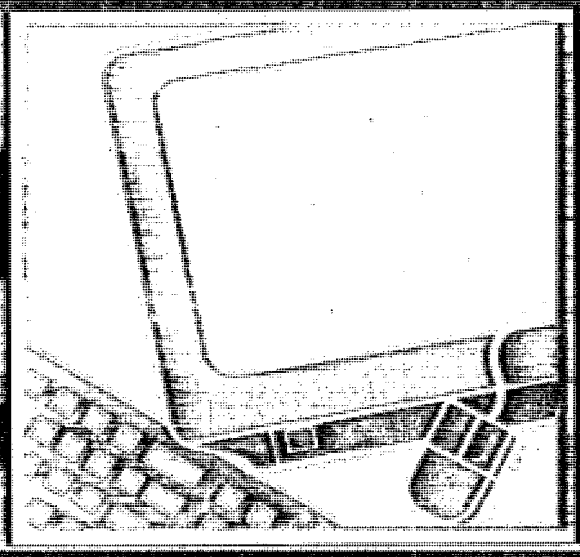

# A Life-Cycle Assessment

## VOLUME 2: Appendices

Design for the Environment
U.S. EPA

Electronic Industries Alliance

# Contents


APPENDIX A: Flat Panel Display Technologies . . . . . A-1

APPENDIX B: Descriptions of Liquid Crystal Display (LCD) Technology and Amorphous Silicon Thin-film Transistor (a:Si TFT) Technology . . . . . B-1

APPENDIX C: Critical Review . . . . . C-1

APPENDIX D: Technical Memorandum: Life-Cycle Inventory Approach for Materials Extraction and Materials Processing Life-Cycle Stages . . . D-1

APPENDIX E: Technical Memorandum: Electrical Energy Grid Life-Cycle Inventories for the CDP . . . . . E-1

APPENDIX F: Manufacturing Data Collection Questionnaire . . . . . F-1

APPENDIX G: Supplemental Manufacturing Data Information . . . . . G-1

APPENDIX H: Technical Memorandum: Use Life-Cycle Stage Approach . . . . . H-1

APPENDIX I: Technical Memorandum: End-of-Life Approach . . . . . I-1

APPENDIX J: Life-Cycle Inventory Tables . . . . . J-1

APPENDIX K: LCIA Supporting Tables . . . . . K-1

APPENDIX L: Secondary Issues to the Use Life-Cycle Stage of Computer Displays . . . . . L-1

APPENDIX M: Life-Cycle Impact Assessment Results . . . . . M-1

APPENDIX N: Chapter 4 Supporting Tables . . . . . N-1

# APPENDIX A

# FLAT PANEL DISPLAY TECHNOLOGIES

this page intentionally left blank

# APPENDIX A

# FLAT PANEL DISPLAY TECHNOLOGIES

## 1. Background

Flat panel displays (FPDs) are increasingly gaining a presence in the computer display market. They provide, for example, a more compact display as used in laptop computers and are viable substitutes for cathode ray tube (CRT) displays. Other advantages over the CRT are higher contrast, sunlight readable, more reliable, and more durable (i.e., require much less maintenance) Koch and Keoleian, 1995). In general, the major disadvantages have been that the resolution and quality of the image did not match that of CRTs. Several different types of FPD technologies have been demonstrated and are in use to varying degrees. The major categories are liquid crystal displays (LCD), plasma display panels (PDP), electroluminescent (EL), field emission displays (FED), vacuum fluorescent displays (VFD), digital micromirror devices (DMD), and light emitting diodes (LED). Table A-1 briefly describes each FPD technology. Although each technology has its own performance characteristics and is manufactured using different materials and processes, most are generally comprised of two glass plates surrounding a material that filters external light or emits its own light. These technologies use manufacturing techniques more similar to the production of semiconductor chips than televisions. Most FPDs control the color and brightness of each pixel (picture element) individually, rather than from one source, such as the electron gun in the CRT. The different types of electronic information display devices and how they are categorized are depicted in Fig. A-1.

### 1.1 Elimination of FPD Technologies from this Study

While there are several types of FPDs, two LCD technologies will be included in this LCA, based on their applicability to be used as substitutes in the computer display market. LCDs comprise approximately 87% of the FPD market (OTA, 1995). Currently, the largest market for FPDs is in notebook computers and CRTs monopolize the desktop computer market. However, FPDs are already moving into the desktop computer market. The LCD technology that best meets the purpose and needs of this study is the amorphous-silicon thin film-transitor (a:Si TFT) active matrix LCD (AMLCD). There are two variations of the a:Si TFT AMLCD that are expected to dominate the desktop monitor market for LCDs: the traditional twisted nematic (TN) mode and the in-plane switching (IPS) mode. Table A-1 describes these technologies. Various subtechnologies of LCDs are presented in Fig. A-2. The IPS mode is a non-nematic amorphous silicon AMLCD. Note that all the subtechnologies listed in Fig A-2 are not described here; the purpose is simply to show the complexity of different types of LCDs.

The PDP technology could be incorporated into the desktop computer market, especially if computers and televisions begin to merge. However, plasma technology is generally designed for large screens, and does not meet the specifications (e.g., diagonal size) of the functional unit defined for this project. Therefore, PDP technology will not be included in the scope of this project. FED and EL technologies are targeted toward military, medical, and high-end commercial products because they possess particular characteristics (such as size, durability, and high image quality) for those niche markets. Because these other FPD technologies are a small

fraction of the market, not targeted toward the desktop computer market, and/or do not meet the specifications of our functional unit, they are not included within the scope of this project. Table A-1 presents brief descriptions of various FPD technologies and whether or not they are included in this LCA.

**Table A-1. Flat panel display technologies**

| Technology | Description | Applicability to Project |
|---|---|---|
| **Liquid Crystal Displays (LCD)** | A liquid crystal material, acting like a shutter, blocks, dims, or passes light unobstructed, depending on the magnitude of the electric field across the material (OTA, 1995). A backlight provides the light source. | Included in this study. Descriptions of the subtechnologies and whether or not they are included in the study are presented below. |
| (1) Passive matrix (PMLCD) | Liquid crystal (LC) material is sandwiched between two glass plates, which contain parallel sets of transparent electrical lines (electrodes) in a row and column configuration to form a matrix. Every intersection forms a pixel, and the voltage across the pixel causes the LC molecules to align and determines the shade of that pixel (OTA, 1995). | Traditionally for low-end applications (e.g., calculators, wrist watches). Higher end applications use a super-twisted nematic (STN)[1] construction. The liquid crystal material is twisted between 180 and 270 degrees which improves the contrast between the "on" and "off" states, resulting in a clearer display than with the twisted nematic (twisted only 90 degrees) (OTA, 1995; MCC, 1997). However, cost and performance issues limit this technology from wide application in the desktop market and therefore, it will not be evaluated in this study. |
| (2) Active matrix (AMLCD) | Similar to the PMLCD except an electronic switch at every pixel provides faster switching and more shades. The addressing mechanism eliminates the viewing angle and brightness problems suffered by PMLCD. Requires more backlight than PMLCD due to the additional switching devices on the glass (at each pixel). Various switching types are listed below: | Provides vivid color graphics in portable computer and television screens (OTA, 1995). This technology meets the functional unit specifications in this study. Specific subcategories are described below. |

[1] Traditional light modulating methods for LCD technologies include twisted nematic (TN), super-twisted nematic (STN), double STN, triple STN, and film-compensated STN (OTA, 1995). The STN is the current standard for high-end PMLCD applications.

**Table A-1. Flat panel display technologies**

| Technology | Description | Applicability to Project |
|---|---|---|
| | *AMLCD Switch Types:* | |
| | (2a) Thin-film transistor (TFT):<br>The transistor acts as a valve allowing current to flow to the pixel when a signal is applied. The transistors are made of various materials including: amorphous silicon (a:Si), polycrystalline silicon (p:Si), non-Si[CdSe] (Castellano, 1992). Two different TFT light modulating modes are twisted nematic (TN) and in-plane switching (IPS) (DisplaySearch 1998). In comparison to the TN mode, the IPS mode requires more backlight but fewer manufacturing steps. | The current standard AMLCD switching mechanism for computer displays is a:Si TFT. Polycrystalline Si is not suitable for larger than about 5" displays. Both the TN and IPS a:Si TFT AMLCD technologies are analyzed in this project. |
| | (2b) Diode matrix:<br>The diode acts as a check valve. When closed, it allows current to flow to the pixel charging it. When opened, the pixel is disconnected and the charge is maintained until the next frame (Castellano, 1992). | The diodes are found to short easily and must be connected in series to achieve long life usability. The diode displays are also limited in size smaller than that of the functional unit. |
| | (2c) Metal-insulator metal (MIM):<br>The MIM is a diode type switch using metal-insulated-metal fabrication techniques (OTA, 1995). | Temperature sensitive, which creates gray scale nonuniformities. They are also size limited like other diode type displays and therefore not included in this study. |
| (3) Active addressed LCD | Hybrid of passive and active matrix. The pixels are addressed using signals sent to the column and row as determined using an algorithm encoded into an integrated circuit (IC). The IC drives each row of pixels more or less continuously and drives multiple rows at one time (OTA, 1995) | Employed in notebook and desktop monitors >12.1". However, they need special drivers (OTA, 1995), have slow response times, and their contrast worsens as panel size increases (Young, 1998). Therefore, this technology does not meet the specifications of the functional unit and is excluded from evaluation in this study. |
| (4) Plasma-addressed liquid crystal (PALC) | The pixel is addressed using row electrodes, which send the signal, and column gas channels, which conduct a current when ionized (OTA, 1995). | PALC displays are in development to be used as large low cost displays. Production of the displays have not yet occurred and they are not included in this study. |
| (5) Ferroelectric LCDs (FLCD or FELCD) | The pixel is addressed using positive or negatives pulses to orient the crystals. The positive pulse allows light to pass (light state) and the negative pulse causes the blockage of light (dark state) (Castellano, 1992). A ferroelectric liquid crystal is bistable and holds it polarization when an electric field is applied and removed (Peddie, 1994). They are also called surface stabilized ferroelectric (SSF) LCD. | Has high resolution with very good brightness, but limited color palette (Peddie, 1994). Limited color palette does not meet color specification of functional unit. |

**Table A-1. Flat panel display technologies**

| Technology | Description | Applicability to Project |
|---|---|---|
| **Plasma Display Panels (PDP)** | An inert gas (e.g., He, Ne, Ar) trapped between the glass plates emits light when an electric current is passed through the matrix of lines on the glass. Glow discharge occurs when ionized gas undergoes recombination. Ionization of atoms occurs (electrons are removed), then electrons are recombined to release energy in the form of light. Full color plasma displays use phosphors that glow when illuminated by the gas (OTA, 1995). | Established technology. Good for large screens (e.g., wall-mounted televisions), but are heavier and require more power than LCDs (OTA, 1995). Designed for large screens and are larger displays than specified for desktop applications. Therefore, not included in this study. |
| **Electroluminescent Displays (EL)** | A phosphor film between glass plates emits light when an electric field is created across the film (OTA, 1995). EL uses a polycrystalline phosphor (similar to LED technology which is also an electroluminescent emitter, but uses a single crystal semi-conductor). ELs are doped (as a semiconductor) with specific impurities to provide energy states that lie slightly below those of mobile electrons and slightly above those of electrons bound to atoms. Impurity states are used to provide initial and final states in emitting transitions (Peddie, 1994). Also referred to as thin-film EL (TFEL). Variations: AC thin-film EL (AC-TFEL), active matrix EL (AMEL), DC EL, organic EL. | Lightweight and durable. Used in emergency rooms, on factory floors, and in commercial transportation vehicles (OTA, 1995). Problems found in the power consumption and controlling of gray levels. Targeted toward military, medical, and high-end commercial products, therefore not included in the scope of this project. |
| **Field Emission Displays (FED)** | Flat CRT with hundreds of cathodes (emitters) per pixel (form of cathodeluminescent display); eliminates single scanning electron beam of the CRT. Uses a flat cold (i.e., room temperature) cathode to emit electrons. Electrons are emitted from one side of the display and energize colored phosphors on the other side (OTA, 1995; Peddie, 1994). | Not commercially available, but anticipated to fill many display needs (OTA, 1995). Could potentially apply in all LCD and CRT applications. High image quality as with CRT, but less bulky and less power use than with CRT. A number of roadblocks to this technology taking over the AMLCD market include proven manufacturing processes (problems found in the reliability and reproducibility of the devices), efficient low-voltage phosphors, and high voltage drivers. The technology is targeted toward military, medical and high-end commercial products and not included in current study. |
| **Vacuum Fluorescent Displays (VFD)** | Form of cathodeluminescent display that employs a flat vacuum tube, a filament wire, a control grid structure, and a phosphor-coated anode. Can operate at low voltages since very thin layers of highly efficient phosphors are coated directly onto each transparent anode (Peddie, 1994). | VFDs offer high brightness, wide viewing angle, multi-color capability and mechanical reliability. Used in low information content applications (e.g., VCRs, microwaves, audio equipment, automobile instrument panels, etc.). No significant uses seen for computer displays (Peddie, 1994). |

**Table A-1. Flat panel display technologies**

| Technology | Description | Applicability to Project |
|---|---|---|
| **Digital Micromirror Devices (DMD)** | Miniature array of tiny mirrors built on a semiconductor chip. The DMD is used in a projector that shines light on the mirror array. Depending on the position of a given mirror, that pixel in the display reflects light either onto a lens that projects it onto a screen (resulting in a light pixel) or away from the lens (resulting in a dark pixel) (OTA, 1995). | Just beginning to be used mainly as projection devices and has not been developed for use that would match the functional unit (OTA, 1995). |
| **Light Emitting Diodes (LED)** | The LED device is essentially a semiconductor diode, emitting light when a forward bias voltage is applied to a p-n junction. The light intensity is proportional to the bias current and the color dependent on the material used. The p-n junction is formed in a III-V group material, such as aluminum, gallium, indium, phosphorous, antimony, or arsenic. | For low information display applications, which makes it not capable of meeting the requirements of the functional unit. Color, power, and cost limitations prevent the emergence into the high information display market (Castellano, 1992). |
| **Electrochromic display** | Open-circuit memory using liquid electrolytes (Peddie, 1994, p. 214). Non-emitter (as LCDs), as opposed to emitters (e.g., EL, FED, PDP). | Outstanding contrast and normal and wide viewing angles; open-circuit memory. Complex and costly involving liquid electrolytes, poor resolution, poor cycle life, lack of multicolor capability, etc. Not suitable for computer displays in past; however, new technology may be promising (Peddie, 1994). |
| **Light Emitting Polymers** | Developing technology (Holton, 1997). | Developing technology. |

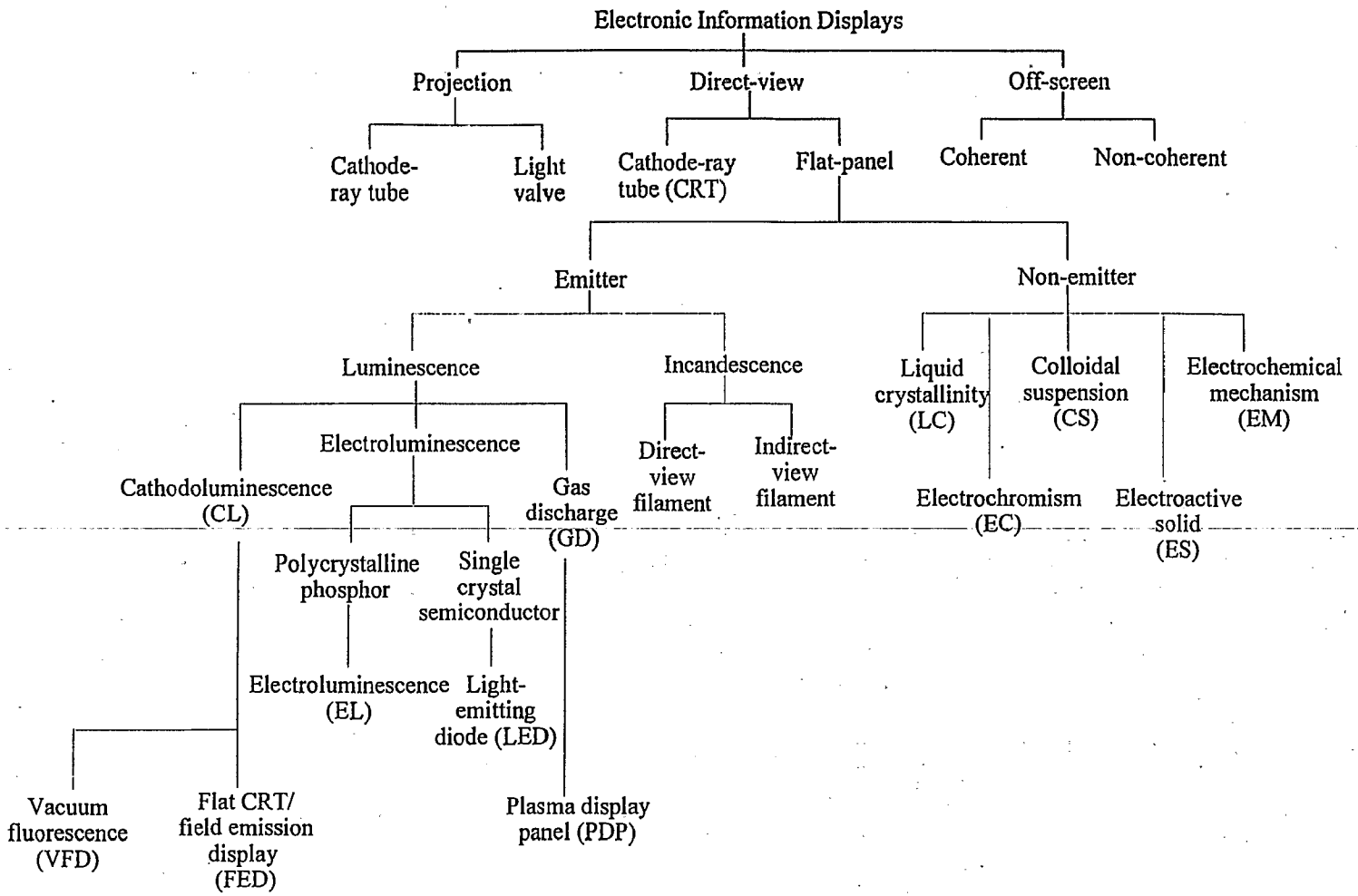


**Figure A-1. Classification of Electronic Information Displays.** *Source:* Adapted from Tannas 1985.

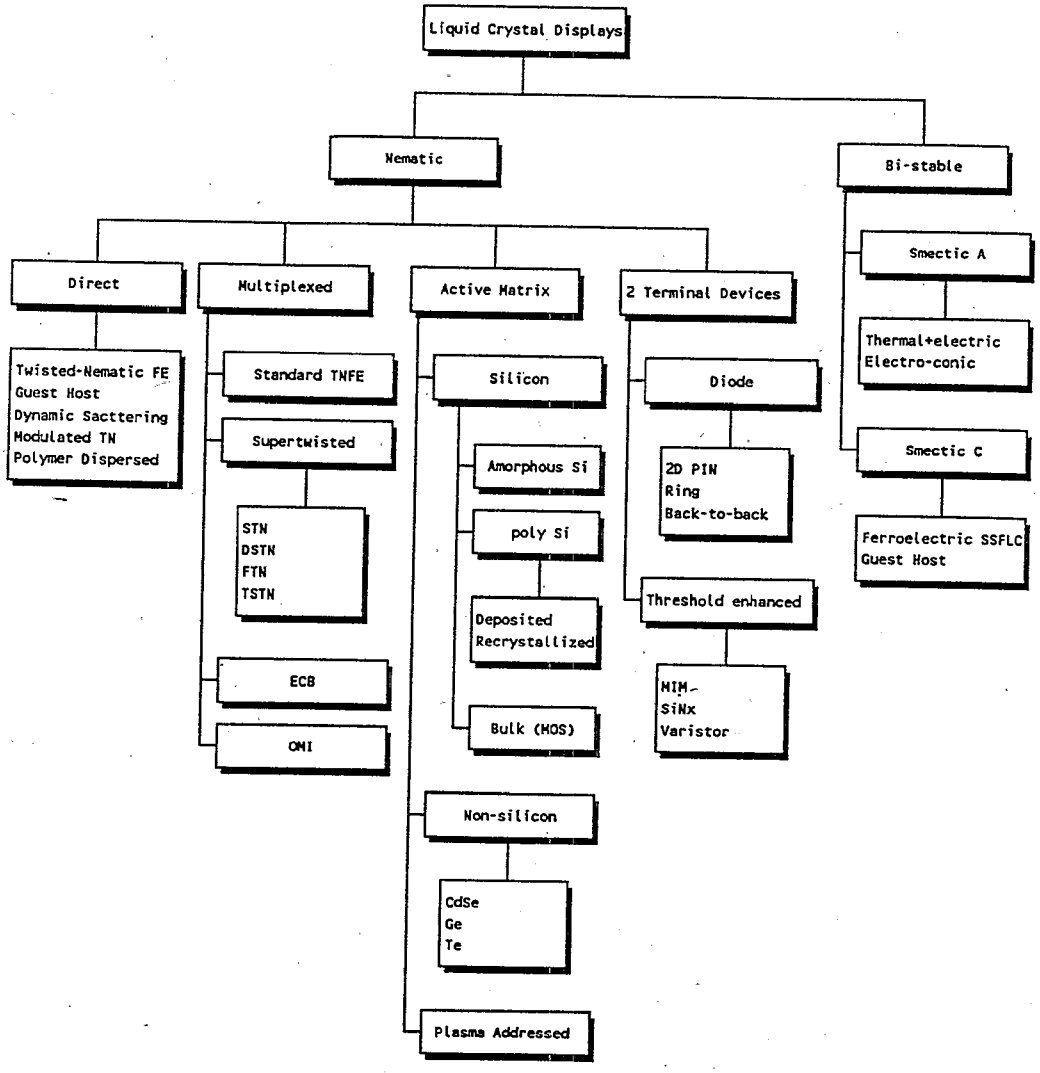


**Fig A-2. LCD subtechnologies. Source: Catellano 1992.**

this page intentionally left blank

# APPENDIX B

## DESCRIPTIONS OF LIQUID CRYSTAL DISPLAY (LCD) TECHNOLOGY AND AMORPHOUS SILICON THIN-FILM TRANSISTOR (a:Si TFT) TECHNOLOGY

this page intentionally left blank

PRODUCTS

WHAT IS A LIQUID CRYSTAL?

PRINCIPLES OF LCD TECHNOLOGY

LCD PRODUCTION METHODS

AMORPHORUS -SI TFT TECHNOLOGY

PROJECTORS

PANELS AND DIRECT VIEW MONITORS

PRO VIDEO PRODUCTS

# PRINCIPLES OF LCD TECHNOLOGY

In this section, we will explain everything ranging from the properties of liquid crystal molecules to the basic principle of display technology by using TN type liquid crystals as an example.

*The parallel arrangement of liquid crystal molecules along grooves*

When coming into contact with grooved surface in a fixed direction, liquid crystal molecules line up parallel along the grooves.

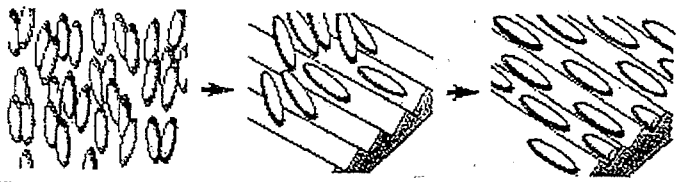

| Natural State | When coming into contact with a finely grooved surface (alignment layer). | Molecules line up parallel along grooves. |
|---|---|---|
| Molecules are arranged in a loosely ordered fashion with their long axes parallel. | | |

When liquid crystals are sandwiched between upper and lower plates, they line-up with grooves pointing in directions 'a' and 'b,' respectively

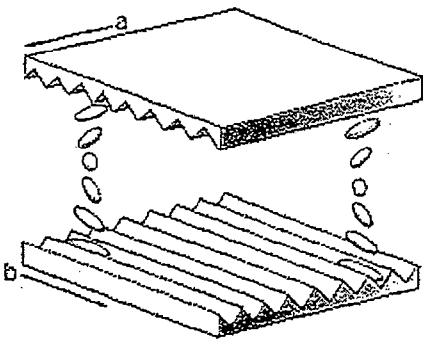


The molecules along the upper plate point in direction 'a' and those along the lower plate in direction 'b,' thus forcing the liquid crystals into a twisted structural arrangement.
(figure shows a 90-degree twist)
(TN type liquid crystal)

Light travels through the spacing of the molecular arrangement

The light also "twists" as it passes through the twisted liquid crystals

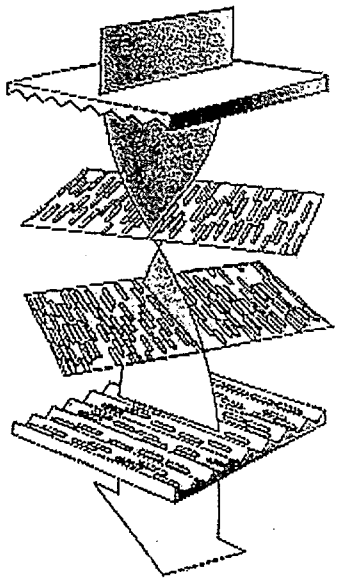

Light passes through liquid crystals, following the direction in which the molecules are arranged. When the molecule arrangement is twisted 90 degrees as shown in the figure, the light also twists 90 degrees as it passes through the liquid crystals.

Light bends 90 degrees as it follows the twist of the molecules

Molecules rearrange themselves when voltage is applied

When voltage is applied to the liquid crystal structure, the twisted light passes straight through.

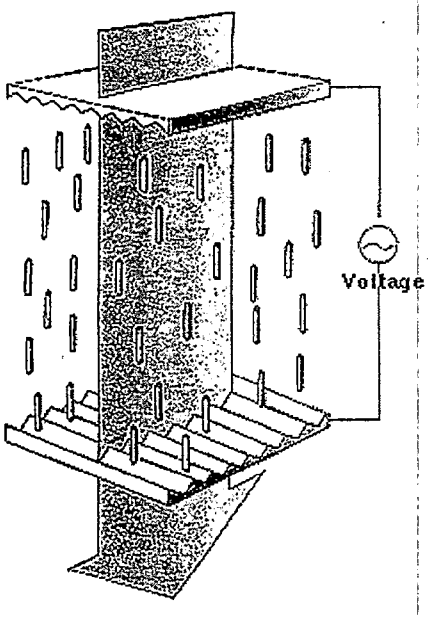


The molecules in liquid crystals are easily rearranged by applying voltage or another external force. When voltage is applied, molecules rearrange themselves vertically (along with the electric field) and light passes straight through along the arrangement of molecules.

Blocking light with two polarizing filters

When voltage is applied to a combination of two polarizing filters and twisted liquid crystal, it becomes a LCD display.

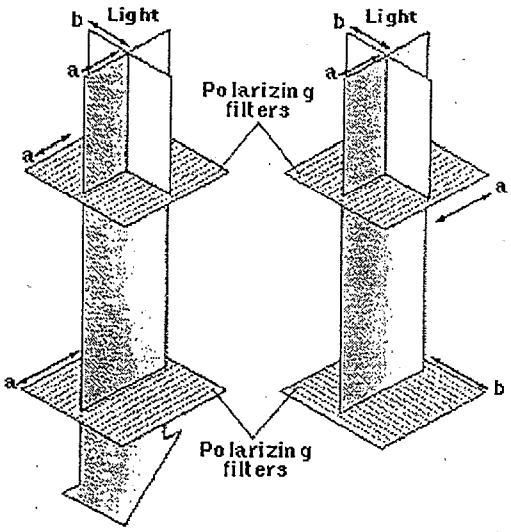


Light passes when two polarizing filters are arranged with polarizing axes as shown above, left.
Light is blocked when two polarizing filters are arranged with polarizing axes as shown above, right.

## TN type LCDs

A combination of polarizing filters and twisted liquid crystal creates a liquid crystal display.

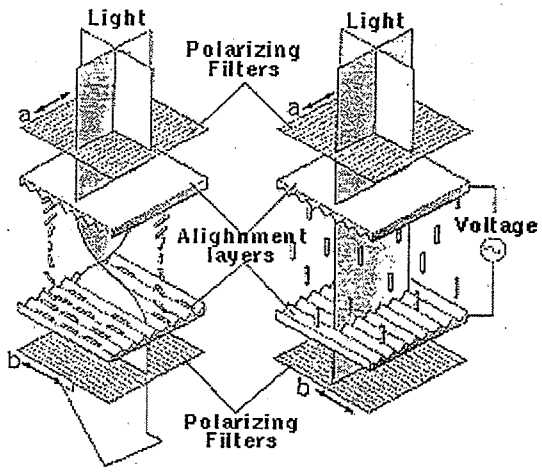


| | |
|---|---|
| When two polarizing filters are arranged along perpendicular polarizing axes, light entering from above is re-directed 90 degrees along the helix arrangement of the liquid crystal molecules so that it passes through the lower filter. | When voltage is applied, the liquid crystal molecules straighten out of their helix pattern and stop redirecting the angle of the light, thereby preventing light from passing through the lower filter. |

This figure depicts the principle behind typical twisted nematic (TN) liquid crystal displays. In a TN type LCD, liquid crystals in which the molecules form a 90-degree twisted helix, are sandwiched between two polarizing filters. When no voltage is applied, light passes; when voltage is applied, light is blocked and the screen appears black. In other words, the voltage acts as a trigger causing the liquid crystals to function like the shutter of a camera.

FROM SHARP MINDS COME SHARP PRODUCTS™

PRODUCTS

WHAT IS A LIQUID CRYSTAL?
PRINCIPLES OF LCD TECHNOLOGY
LCD PRODUCTION METHODS
AMORPHOUS -SI TFT TECHNOLOGY
PROJECTORS
PANELS AND DIRECT VIEW MONITORS
PRO VIDEO PRODUCTS

## AMORPHUS-SI TFT TECHNOLOGY

Active matrix LCDs, which are typically used in products such as LCD projectors, are controlled by a switching element known as a thin-film transistor or thin-film diode placed at each pixel.

The fundamental concept was revealed in 1961 by RCA of America, a U.S. company, but basic research only began in the 1970's. Amorphous Si TFT LCDs introduced in 1979 and 1980 have become the mainstream for today's active matrix displays. These units place an active element at each pixel, and taking advantage of the non-linearity of the active element, are able to apply sufficient drive-voltage margin to the liquid crystal itself, even with the increase in the number of scan lines.

As shown in Figure 1, TFT LCDs that use amorphous Si thin-film transistors (TFTs) as the active elements are becoming the mainstream today, and full-color displays achieving contrast ratios of 100:1 and which compare favorably to CRTs are being developed.

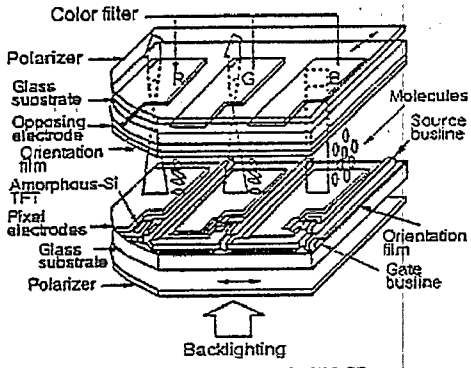


Figure 1 Construction of TFT LCD

The driver electronics for TFT LCDs consist of data-line drive circuitry that applies display signals to the data lines (source drivers) and scanning line drive circuitry that applies scanning signals to the gate lines (gate drivers). A signal control circuit to control these operations and a power supply circuit complete the system.

Liquid crystal materials used in TFT LCDs are TN (twisted nematic) liquid crystals, but despite the fact that pixel counts have increased and a drive element is placed at each pixel, we have still been able to rapidly increase the contrast, viewing angle, and image quality of these displays.

However, manufacturing technologies to fabricate several hundred thousand such elements onto the surface of a large screen are extremely problematic, and the fundamental approach developed in 1987 is still being used today.

In 1988, Sharp developed a 14-inch TFT color TV, and with this development of a futuristic wall-mount TV, TFT LCDs created the foundation for manufacture and introduction of large-screen color displays.

Reinitzer discovered liquid crystals almost 100 years ago, and today, bolstered by customer needs and the new and special technologies and materials that a manufacturer can offer to meet those needs, liquid crystals have made huge strides.

At this opportunity, we would to make the whole world aware of the potential of LCDs, and as new manufacturers enter the market, become the trigger that raises this awareness to new levels.

In the evolution of LCD display manufacturing, the burden of undertaking aggressive development of application products has been considerable. In addition to notebook and sub-notebook PCs that have been the mainstream applications for LCDs in the past, there has been significant growth in areas which take advantage of the unique characteristics of LCD displays, such as compact size, thin profile, and low power consumption to create products which could not be produced using CRTs, such as LCD TVs, ViewCams, new portable information tools, etc. In addition, for large projection TVs, it has now become possible to develop products that are more compact and lighter in weight than conventional CRT-based models, and LCDs are rapidly becoming the mainstream display device in this field.

In this way, LCD displays have expanded into application areas that were once niches belonging solely to CRTs, and the development of numerous key technologies that have the potential to further expand their application product areas continues.

Thanks to the development of TFT LCD displays and the synergistic evolution (spiral evolution) with LCD application devices and equipment, such as PC notebooks and computer monitors, A/V equipment, car navigation systems, game devices, etc., we can anticipate the growth of new demand-generating products. LCDs have emerged as the likely winner among flat-panel displays for the new information-oriented society. As we approach the dawn of the multimedia era which will see the convergence of video, computers, and communications, a critical need is emerging for innovations in displays that link man and machine through our sense of sight.

The driving force behind LCD manufacturing are recently developed amorphous-Si TFT LCD technologies which represent breakthroughs in the areas of 1) higher aperture ratios, 2) wider viewing angles, and 3) EMI (electromagnetic interference) reduction, as well as low-temperature polycrystalline Si TFT LCD display technologies. Thanks to these

breakthroughs, a new direction has emerged in 1996 which will make the best use of these key technologies in LCD applications. For example, higher aperture ratio technologies are being used in LCD displays intended for PC notebooks, wider viewing angle and lower EMI technologies are being used in LCDs destined for LCD monitors, and low-temperature polycrystalline Si TFT LCD technologies are being used as super-fine dot-pitch light valves for high-definition projection TV systems.

In the future, promising new technologies can be expected to spawn the next generation of new LCD application products based on high-performance LCD display systems ("systems-on-panel") that takes full advantage of integrated drive and control circuitry.

FROM SHARP MINDS COME SHARP PRODUCTS

LCD

## References

Sharp. 1998. Information found on a Web page from Sharp USA. Web site available at: <http://www.sharp-usa.com/products/pro/tech/>.

# APPENDIX C

## CRITICAL REVIEW

this page intentionally left blank

# APPENDIX C

## CRITICAL REVIEW

**Table C-1. Computer Display Project Core Group* and Technical Work Group Members**

| Contact | Organization | Location |
|---|---|---|
| Salla Ahonen | Environmental Issues, Nokia Research Center, Nokia | Helsinki, Finland |
| Heather Bowman | Electronics Industry Alliance | Arlington, VA |
| Reggie Caudill | New Jersey Inst. of Tech. Research Center | Newark, NJ |
| Bob Donofrio | Display Device Consultants | Ann Arbor, MI |
| Holly Evans<br>Co-Chair, Core Group | Electronics Industry Alliance | Arlington, VA |
| Bruce Gnade | DARPA | Arlington, VA |
| Tony Hainault | Minnesota Office of Environmental Assistance | St. Paul, MN |
| Kathy Hart*<br>Co-Chair, Core Group | US EPA, Office of Prevention Pesticides and Toxic Substances | Washington, DC |
| Edwin Henderson* | US EPA, Office of Prevention Pesticides and Toxic Substances [a] | Washington, DC |
| David Isaacs*<br>former Co-Chair, Core Group | Electronics Industry Alliance [a] | Arlington, VA |
| Mikko Jalas | Environmental Issues, Nokia Research Center, Nokia | Helsinki, Finland |
| Tim Jarvis | The SemiCycle Foundation | Austin, TX |
| Greg Keoleian | U. of Michigan, School of Natural Resources and the Env. | Ann Arbor, MI |
| Lori Kincaid* | Univ. of TN<br>Center for Clean Products and Clean Technologies | Knoxville, TN |
| J. Ray Kirby | IBM | Research Triangle Park, NC |
| Jonathan Koch | GE Power Systems | Schenectady, NY |
| David Lear | Compaq Computer Corp. | Houston, TX |
| Clare Lindsay | U.S. EPA, Office of Solid Waste | Arlington, VA |
| John Lott | DuPont Electronic Materials | Research Triangle Park, NC |
| Jeff Lowry | Techneglas | Columbus, OH |
| Carole McCarthy | McCarthy Environmental Consulting | Duxbury, MA |
| Timothy Mann | IBM | Loganville, GA |

**Table C-1. Computer Display Project Core Group* and Technical Work Group Members**

| Contact | Organization | Location |
|---|---|---|
| Frank Marella<br>Co-Chair, Technical Work Group | Sharp Electronics Corporation | Mahwah, NJ |
| John Mathews | Envirocycle | Hallstead, PA |
| Jay Mathewson | Eastman Kodak Co. | Rochester, NY |
| Colleen Mizuki* | Microelectronic & Computer Technology Corporation [a] | Austin, TX |
| Amanda Monchamp | Electronics Industry Alliance [a] | Arlington, VA |
| Rick Nolan | Motorola | Austin, TX |
| Bob Pinnel* | U.S. Display Consortium | San Jose, CA |
| Greg Pitts* | Microelectronic & Computer Technology Corporation [a] | Austin, TX |
| Gene Proch | Corning Asahi | |
| Gloria Schuldt | Microelectronic & Computer Technology Corporation [a] | Austin, TX |
| Eileen Sheehan | U.S. EPA, P2 Team, Region 9 | San Francisco, CA |
| Dipti Singh*<br>Co-chair, Technical Work Group | US EPA, Office of Prevention Pesticides and Toxic Substances | Washington, DC |
| Doug Smith | Sony Electronics Inc. | San Diego, CA |
| Ted Smith* | Silicon Valley Toxics Coalition | San Jose, CA |
| David Spengler* | Digital Equipment Corporation | Maynard, MA |
| Maria Socolof* | Univ. of Tennessee<br>Center for Clean Products & Clean Technologies | Knoxville, TN |
| Dan Steele | Motorola MD FPD 10<br>ESIH and Chemical Operations Flat Panel Display Division | Tempe, AZ |
| Larry Stone | Compaq Computer Corp. | Houston, TX |
| Butch Teglas (Delmer F.) | Philips Consumer Electronics | Knoxville, TN |
| Valerie Thomas | Princeton Univ. Ctr. For Energy & Env. Studies | Princeton, NJ |
| David Thompson | Matsushita Electronic Corporation of America | Secaucus, NJ |
| Donna Timmons | Eastman Kodak Co. | Rochester, NY |
| Dani Tsuda* | Apple Computer Inc. | Cupertino, CA |
| Lucian Turk | Dell Computer | Austin, TX |
| Laura Turbini | Georgia Institute of Technology | Atlanta, GA |
| Victoria Wheeler | Eastman Kodak Co. | Rochester, NY |

**Table C-1. Computer Display Project Core Group* and Technical Work Group Members**

| Contact | Organization | Location |
|---|---|---|
| Ross Young<br>former Co-Chair,<br>Technical Work Group | Display Search | Austin, TX |

* Core Group members (subset of Technical Work Group)
[a] Affiliation at time of involvement in project.

**Table C-2. U.S. EPA Design for the Environment Workgroup Members for the Computer Display Project**

| Name | Division/Branch |
|---|---|
| Andrea Blaschka | Risk Assessment Division/Existing Chemicals Assessment Branch |
| Susan Dillman | National Program Chemicals Division/Technical Branch |
| Franklyn Hall | Economic, Exposure, and Technology Division/Chemical Engineering Branch |
| Kathy Hart | Economics, Exposure, and Technology Division/Design for the Environment |
| Karen Hogan | Risk Assessment Division/Science Support Branch |
| Susan Krueger | Economics, Exposure, and Technology Division/Economic and Policy Analysis Branch |
| Fred Metz | Economics, Exposure, and Technology Division/Industrial Chemistry Branch |
| Dipti Singh | Economics, Exposure, and Technology Division/Design for the Environment |
| Jerry Smrchek | Risk Assessment Division/Existing Chemicals Assessment Branch |

this page intentionally left blank

# APPENDIX D

## TECHNICAL MEMORANDUM:
## Life-Cycle Inventory Approach for Materials Extraction and Materials Processing Life-Cycle Stages

this page intentionally left blank

# APPENDIX D

## TECHNICAL MEMORANDUM:
## Life-Cycle Inventory Approach for Materials Extraction and Materials Processing Life-Cycle Stages

## 1. INTRODUCTION

### 1.1 Background

The U.S. Environmental Protection Agency's Design for the Environment Program Computer Display Project (CDP) is conducting an environmental life-cycle assessment (LCA) that will evaluate the relative environmental impacts of cathode ray tubes (CRT) and liquid crystal display (LCD) computer monitors. The major life-cycle stages of a product system include materials extraction, materials processing, product manufacturing, product use, and final product disposition (end-of-life). An LCA evaluates the relative environmental impacts of a product system and is defined in greater detail in Chapter 1 of the main report. An LCA generally consists of four phases: goal definition and scoping, life-cycle inventory (LCI), life-cycle impact assessment (LCIA), and life-cycle improvement assessment.

The activity of quantifying the inputs (e.g., materials, utilities) and outputs (e.g., emissions, wastes) of a product system is the LCI phase of an LCA. A product system is made up of the multiple processes that help produce, use, or dispose of the product. Each process typically has an inventory that consists of inputs and outputs for each process. Therefore, an LCI of a product system consists of several inventories for processes throughout the life-cycle of the product. This technical memorandum (TM) addresses the LCIs related to two major life-cycle stages: materials extraction and materials processing, which together will be referred to as the life-cycle stages that are "upstream" of the product manufacturing stage. Ideally, transportation associated with those stages is also included. This TM will describe the approach to choosing the upstream data from secondary sources that will be included in the CDP analysis.

### 1.2 Purpose and Scope of this Technical Memorandum

The purpose of this TM is to present the approach for obtaining process-specific inventory data related to extraction and processing of the materials needed to produce a CRT and LCD computer monitor. Collecting these upstream inventory data can involve dozens of upstream processes because there are dozens of materials used to produce CRTs and LCDs. Therefore, decision rules are typically used to limit which materials to include in the scope of the LCA, and existing data from secondary sources are generally relied upon. For inventories related to materials extraction and materials processing, various databases with input and output LCI data exist for materials commonly used in industry. The existence of these inventories, and the limited resources available for collecting primary inventory data for the entire life cycle, result in the use of secondary data for upstream processes. In the CDP, more emphasis will be given to collecting primary data for product manufacturing and end-of-life processes. This TM identifies initial materials considered for inclusion in the upstream life-cycle stages. Actual material lists from the inventories collected from the primary data collection efforts were not available until

after data collection had to begin for the upstream processes. Therefore, initial materials were identified to help determine which secondary data to obtain. Once actual materials from the manufacturing stage inventory were identified, the selected secondary data source was checked for the appropriate data sets to be included in the study. This TM addresses the initial steps for choosing which upstream data source to use, by identifying and prioritizing several data sources. The remainder of this TM will present a brief summary of results, the methodology for selecting secondary upstream data for the CDP, detailed results in terms of preferred data sources, and the limitations to using the upstream data for the CDP.

## 2. RESULTS SUMMARY

Based on initial material lists and project decision rules, approximately 40 materials (including some material groups) were initially identified as materials for which upstream data inventories should be included in the CDP LCA. Nine data sources (i.e., studies and/or databases) were evaluated to determine which upstream data would be used for these and other materials that might be identified in the CDP. Two databases were disregarded because the data are not or will not be available to the public. The remaining seven were reviewed for their applicability to the CDP. Complete inventory data for all currently identified CDP materials were not available from any one of the databases/studies alone. Therefore, a hierarchy of preferred data has been chosen for upstream data from secondary sources. The most preferred data is that from the Environmental Information and Management Explorer (EIME) database developed by *Ecobilan* (Ecobalance), a company based in France.

EIME is an LCA software package that specializes in electronics and the electronics industry and currently includes 18, with forthcoming updates expected to bring it to 21 materials specific to the CDP. The database is immediately available, and although it is relatively expensive, it may be attainable at a negotiated price (Glazebrook 1999). The EIME data do not fulfill all the CDP's upstream data requirements and therefore, other databases will be needed. Twelve materials were not found in any of the databases and may require additional research from secondary or primary sources to complete the CDP product system inventories. It appears, however, that EIME, supplemented with Ecobalance's Database for Environmental Analysis and Management (DEAM) will cover most materials needed in the CDP.

## 3. METHODOLOGY

The method for determining the upstream data that will be used for the CDP depends on which materials need to be included in the upstream evaluation and what existing databases are currently available for those materials. This section consists of three subsections that present the following: (1) how the preliminary list of materials were identified; (2) which data sources were considered for use as CDP upstream inventory data; and (3) the selection criteria for choosing which upstream data to include in the CDP.

### 3.1 Materials Selection

The first step to selecting upstream data sources is to identify what materials are of interest to the project. Primary data collected from manufacturing facilities will provide a list of upstream materials to consider in the upstream stages. However, the materials inventory from

the CDP product manufacturing stage was not yet complete when upstream data collection needed to begin to meet project time and budget constraints. Therefore, a preliminary list of materials used to manufacture the monitors was identified by disassembling a CRT and LCD and by reviewing the literature on manufacturing processes. The list was then slightly reduced based on decision rules to limit the scope of the project. This preliminary list is then used to help choose preferred sources of upstream data for materials of interest in the CDP. The following subsections describe the bills of materials of the LCD and CRT, the decision rules applied to the bills of materials, and the list of selected materials for upstream data collection.

### 3.1.1 Bills of Materials

A 15" CRT and a 15" LCD desktop monitor were disassembled, to the extent they could be manually separated, into their component parts/materials and each of these parts was weighed using Mettler analytical balances. A 17" CRT (the CDP functional unit) was not available for disassembly and therefore it is assumed that the percent contribution of materials in the 15" CRT and the 17" CRT are equivalent, which is an adequate assumption for the purposes of identifying major product materials.

Primary (also referred to as "product") materials are defined as those that become part of the final assembled monitor. Bills of materials of the CRT and LCD monitors were compiled to quantify the mass contribution of each primary material and component in each monitor. Where individual materials could not be discerned, component parts consisting of multiple materials were identified and weighed. These bills of materials are presented in the CDP's Industry and Technology Profile Document (MCC 1998). The material makeup of some component parts [e.g., thin-film transistors (TFTs) on LCD glass substrate or phosphors on CRT glass substrate] were identified from published literature (i.e., secondary sources) (O'Mara 1993, DisplaySearch 1998, FCR 1996, MCC 1993, ECT 1980). Simultaneous and subsequent work on the CDP involved obtaining more details on the makeup of certain component parts from manufacturers (i.e., primary sources) through data collection questionnaires.

The next step was to identify common ancillary (also referred to as "process") materials used in product manufacturing, which were found from secondary sources (O'Mara 1993, DisplaySearch 1998, FCR 1996, MCC 1993, ECT 1980) and reviewed by industry experts. These ancillary materials were added to the primary bills of materials for consideration in the LCA (MCC 1998). Additional ancillary materials were identified from primary sources during concurrent manufacturing data collection activities.

### 3.1.2 Decision Rules

Due to the complexity of the CRT and LCD monitors, and for any LCA, the boundaries of the analysis must be clearly defined. Thus, the following decision rules for choosing the materials to be evaluated were developed and applied to the primary and ancillary bills of materials. Three major categories of decision criteria were used to select materials for detailed analysis in the LCA: (1) mass contribution; (2) potential environmental and/or energy significance; and (3) technological importance. A priority hierarchy was developed (Figure 1) using a combination of these criteria.

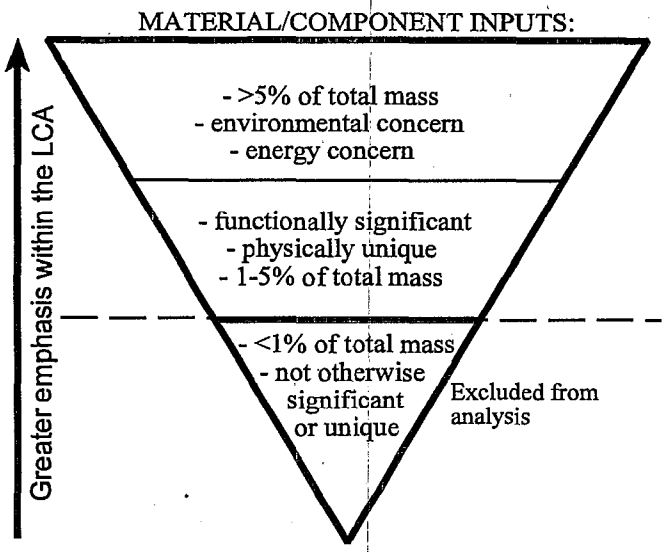


**Figure 1. Decision rule hierarchy**

The first criterion is applied by including materials that constitute greater than or equal to 1% of the monitor by mass. Materials constituting more than 5% will be given greater emphasis in the LCA. Mass is a simple measure by which to select important materials for consideration in the LCA because in many cases, the larger the material, the greater the impact. This is true for resource consumption impacts which are equivalent to the amount of material used. However, other impact categories may not be equivalent to the amount of material consumed, and simply eliminating materials based on mass alone may exclude important impacts from an environmental life-cycle perspective. Therefore, under the second criterion, materials were also included if they have a potential environmental/health impact (e.g., they may be toxic) or use large amounts of energy to produce. The environmental criterion decision rule refers to materials that may pose risks to the public, occupational workers, or the ecosystem from manufacturing, use, or disposal of the material. The primary and ancillary materials were reviewed by a team of experts at the University of Tennessee and were compared to regulatory lists and other sources (Klaassen et al. 1986, EPA 1998, ChemFinder 1998, SRC 1998) to identify materials with known or potential environmental concerns. When impacts are calculated in the LCIA, a more rigorous review of toxicity data and environmental parameters will be conducted to provide quantitative impact measures.

The third decision rule criterion applies to materials that are critical to the technology (e.g., LCD TFT materials or the CRT phosphors). This is intended to ensure that other materials of potential importance are not overlooked in the LCA. Furthermore, because the LCA will be comparative in nature, greater emphasis will be placed on materials that are physically unique to a display technology.

For the materials meeting the top tier of the decision rule hierarchy (Figure 1) in the CDP, attempts are made to obtain secondary data for those upstream material processes. Materials in the middle segment of the triangular hierarchy scheme are given lower priority, but included, if

available. Finally, the last segment of the triangle would contain materials excluded from the analysis.

### 3.1.3 Material Selection Results

The materials identified here are for selecting which materials require the collection of input and output inventory data from materials extraction, materials processing, and associated transportation, collectively referred to as the "upstream" life-cycle stages. The inventories from each of these life-cycle stages are then used to calculate impacts of the various impact categories considered in the analysis.

The total masses of the CRT and LCD that were disassembled were approximately 12.8 kg and 5.15 kg, respectively. The printed wiring boards (PWBs) and their components were excluded from these weights and from the following materials analysis because they are treated as complex display components not broken down by individual materials. The CRT consists of approximately 17 primary materials and the LCD is comprised of about 23 primary materials (MCC 1998). The major primary materials by weight (≥1%) in the CRT and LCD are listed in Table 1 with their corresponding components. Figures 2 and 3 depict the percent contribution of each of those materials to the overall monitor. For the CRT, eight materials were greater than or equal to 1% and only three [glass, steel, and high impact polystyrene (HIPS)] were greater than 5% of the weight of the monitor. The LCD had seven materials greater than or equal to 1%, five of which were greater than 5% [steel, polycarbonate, acrylonitrile butadiene styrene (ABS), polyester, and glass]. The items in bold in Table 1 represent the materials that are >5% for both the CRT and LCD. Other primary materials to be included in the LCA, based on the environment and technology decision rules, are presented in Table 2. The primary materials that were excluded due to mass are presented in Table 3.

Ancillary materials, such as those required for photolithography, are used in greater quantities for LCDs than CRTs. Preliminary literature searches (O'Mara 1993, DisplaySearch 1998, FCR 1996, MCC 1993, ECT 1980) found four ancillary materials for CRTs and 12 for LCDs (MCC 1998). The latter portion of Table 2 presents the ancillary materials that are included for either technological or environmental importance. The mass criterion for ancillary materials will be identified through responses to data collection questionnaires distributed to manufacturers participating in the project. Table 3 shows the ancillary materials that were preliminarily excluded based on environmental and technical criteria because mass data for ancillary materials are not yet available.

**Table 1. Primary materials comprising ≥1% by mass of a CRT or LCD monitor and associated components [a]**

| Material | Associated component(s) | |
|---|---|---|
| | CRT | LCD |
| **ABS** | ----- | Base/stand |
| Aluminum (Al) | Aluminum shielding, power board heat sink, connectors | Power supply heat sink, TFT metal |
| Copper (Cu) | Deflection yoke | ----- |
| Ferrite-magnet | Deflection yoke | ----- |

**Table 1. Primary materials comprising ≥1% by mass of a CRT or LCD monitor and associated components [a]**

| Material | Associated component(s) | |
|---|---|---|
| | CRT | LCD |
| **Glass (e.g., borosilicate)** [b] | ----- | LCP panel |
| **Glass (lead oxide)** | Panel, funnel, neck, frit | ----- |
| Lead (Pb) [c] | Funnel & neck glass, frit | ----- |
| Plexiglas | ----- | Backlight clear protector |
| **Polycarbonate** | ----- | Backlight light pipe |
| **Polyester** | ----- | Power supply & rear cover insulators |
| **Polystyrene, high-impact (HIPS)** | Casing | ----- |
| Silicone | Potting material in flyback transformer | ----- |
| **Steel** | Base, right, left & back shields; shadow mask | Base/stand weight & brackets, backlight plates, rear cover metal plate, power supply housing |

[a] See Figures 2 and 3 for material percent contributions to total mass of monitor, excluding PWBs.
[b] Includes materials that could not be easily separated from the glass (e.g., frit, phosphors, transistors) and subtracts the estimated lead content of the glass for the CRT.
[c] The mass of lead was estimated from the total mass of the different glass components and approximate lead levels in the CRT glass components (MCC 1994). On average, approximately 10% of the total mass of CRT glass was assumed to be lead.
NOTE: Materials in bold are >5% of the monitor by weight.

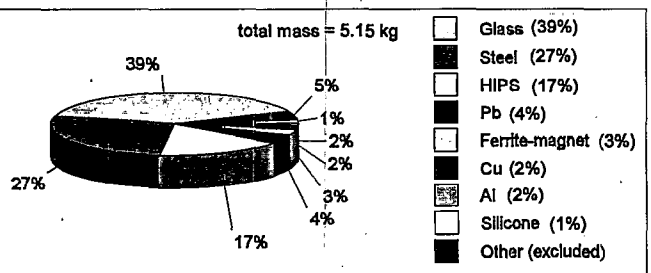


Fig. 2. CRT product materials meeting mass decision rule

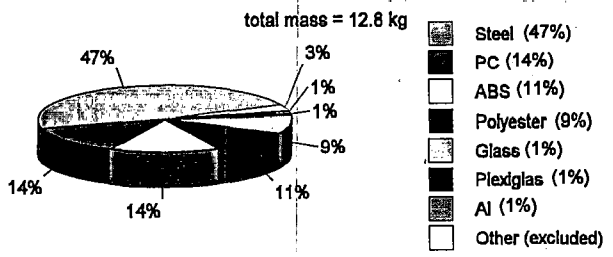


Fig. 3. LCD product materials meeting mass decision rule

**Table 2. Primary and ancillary materials or components meeting technology (T), environment (Env), or energy (E) criteria**

| Materials | Associated components or process | | Decision criteria | |
|---|---|---|---|---|
| | CRT | LCD | CRT | LCD |
| **Primary materials** | | | | |
| Aluminum oxide ($Al_2O_3$) | Electron gun wire heater | ----- | Env | ----- |
| Aquadag | Faceplate black matrix coating | ----- | T | ----- |
| Beryllium (Be) | ----- | Be-Cu metal clips | ----- | Env |
| Bismuth oxide | Shadow mask back coating | ----- | Env | ----- |
| Color filters (acryl epoxy resins) | ----- | Front panel glass color filters | ----- | T |
| Divinylbenzene resin | ----- | Spacers in AMLCD cell | ----- | Env |
| Frit (lead solder glass) | Glass solder joints | ----- | Env, E | ----- |
| Indium-tin oxide (ITO) | ----- | Electrode | ------ | T |
| Liquid crystals (e.g., polycyclic aromatic halogenated hydrocarbons, cyanobiphenyl, phenylcyclohexane compounds) | ----- | Light-modulating material | ----- | T, Env |
| Mercury | ----- | Cold cathode fluorescent tube in backlight | ----- | Env |
| Nickel | Electron gun cathodes | ----- | T, Env | ----- |
| Phosphors (e.g., ZnS, $Y_2O_2$) | Illuminating material | ----- | T, Env | ----- |
| Polyimide | ----- | AMLCD cell alignment layer | ----- | T |
| TFT metals (e.g., Al, Cr, Mo, W) | ----- | Transistor | ----- | T, Env |
| TFT silicon materials (e.g., $SiO_2$, SiNx, doped Si) | ----- | Transistor | ----- | T |
| Tungsten (W) | Electron gun wire heater | Transistor | T, Env | T, Env |
| **Ancillary materials** | | | | |
| Boron trichloride ($BCl_3$) | ----- | Photolithographic etchant | ----- | Env |
| Carbon tetrafluoride ($CF_4$) | ----- | Photolithographic etchant | ----- | Env |
| Carbon trifluoride ($CHF_3$) | ----- | Photolithographic etchant | ----- | Env |
| Chloride ($Cl_2$) | ----- | Photolithographic etchant | ----- | Env |
| Ferric chloride ($FeCl_3$) | Photolithographic etchant (shadow mask) | ----- | Env | ----- |
| Hydrochloric acid (HCl) | ----- | Photolithographic etchant | ----- | Env |
| Isopropyl alcohol (IPA) | ----- | Glass cleaner | ----- | Env |
| N-methyl pyrrolidone (NMP) | ----- | Photolithographic developer | ----- | Env |
| Polyvinyl alcohol | Photolithographic application of phosphors | ----- | Env | ----- |
| Sulfur hexafluoride ($SF_6$) | ----- | Photolithographic etchant | ----- | Env |

**Table 2. Primary and ancillary materials or components meeting technology (T), environment (Env), or energy (E) criteria**

| Materials | Associated components or process | | Decision criteria | |
|---|---|---|---|---|
| | CRT | LCD | CRT | LCD |
| Tetramethyl ammonium hydroxide (TMAH) | ----- | Photolithographic developer | ----- | Env |

The materials identified for inclusion in the CDP (Tables 1 and 2) are then prioritized based on the decision rule hierarchy triangle. Those materials that are either: (1) >5% by mass; or (2) of environmental/energy concern, fit into the top priority of the upstream data collection effort. Those materials that are either: (1) between 1-5% by mass; or (2) functionally important and/or physically unique, fit into a lower priority of upstream data collection, but are still included in the project. Those materials that are less than 1% by mass and do not meet the other criteria listed above are excluded from the analysis. Currently, the materials falling into each segment of the decision rule hierarchy are listed in Table 4.

**Table 3. Materials excluded from analysis**

| Material | Associated component/application | |
|---|---|---|
| | CRT | LCD |
| **Primary materials** | | |
| Aluminized mylar | | Corner tape on backlight assembly |
| Brass | Brass ring on neck assembly | Brass threaded standoff in backlight assembly |
| Foam rubber | | Foam gasket in backlight assembly |
| Nylon | | Cable clamp, strain relief in backlight assembly, clamp in backlight, bushing in base/stand assembly |
| Paper | | Caution label on rear plate assembly |
| Polysulphone | Insulating rings on neck assembly | |
| Silicone rubber | | Gaskets in LCD panel assembly, shock cushion in light assembly, rubber feet in base/stand assembly |
| **Ancillary materials** | | |
| Nitrocellulose binder | For frit application | |
| Amyl acetate | For frit application | |
| $O_2$ | | Metal etchant |
| $N_2$ | | Metal etchant |
| Iodine | | Polarizer coating |

For the top priority materials, we obtained upstream inventory data from secondary sources where available. If no secondary sources were available, we attempted to collect primary data or conduct further research from the literature. For materials in the middle tier, we attempted to collect secondary data but gave less emphasis on including them if too many resources were required. The top tier consists of materials greater than 5% by mass and all the materials in Table 2. Each material in Table 2 was added to the list of materials for either environmental or technological reasons and all except tungsten (W) were unique to a technology. However, tungsten is also included in the top tier for potential environmental concern. As a result, all the materials in Table 2 are of potential environmental concern and/or are both functionally important and physically unique (see Figure 1).

**Table 4. Summary table of preliminary CDP materials in priority hierarchy**

| Top tier | Middle tier | Lowest tier (excluded) |
|---|---|---|
| Steel, CRT glass, HIPS, Polycarbonate, ABS, Polyester, LCD glass, lead, $Al_2O_3$, Aquadag, Be, Bismuth oxide, Acryl epoxy resins (color filters), Divinylbenzene resin, Frit, ITO, Liquid crystals, Hg, Ni, Phosphors, Polyimide, TFT metals, TFT silicon materials, W, $BCl_3$, $CF_4$, $CHF_3$, $Cl_2$, $FeCl_3$, HCI, IPA, NMP, Polyvinyl alcohol, $SF_6$, TMAH | Ferrite-magnet, Silicone, Plexiglas, Al, Cu | Aluminized mylar, Brass, Foam rubber, Nylon, Paper, Polysulphone, Silicone rubber, Nitrocellulose binder, Amyl acetate, $N_2$, $O_2$, Iodine |

## 3.2 Data Sources Evaluated

In order to identify upstream inventory data to be used for the CDP, nine different data sources (databases or studies) were evaluated. The following nine were chosen based on UT's experience in LCA, which included a comprehensive review of LCA databases (Menke et al. 1996), and from the scoping process for this project:

- American Plastics Council (APC)
  The APC is a major trade association for the U.S. plastics industry. APC is comprised of 24 of the leading plastics manufacturers in the United States with many members having a strong global market presence. APC's membership represents 80% of the U.S. resin production capacity (APC 1999). APC has collected LCI data that are expected to be released in 1999 for polyethylene (PE), polypropylene (PP), high impact polystyrene (HIPS), polyethylene terephthalate (PET), and polyvinyl chloride (PVC) resins and polyurethane precursors (Hentges 1999). Data are mostly vintage 1991 or 1993 and cover production in North America (Hentges 1999). Additional inventories from APC have not yet been identified, although they are presumed to exist.

- Association of Plastics Manufacturers in Europe (APME)
  APME is an industry body that has published inventory data on olefins, polystyrene (PS), PE, PP, PVC, PET and polymethanes (APME 1999), as well as ABS, Plexiglas, polycarbonate, polyester, and polyimide (Karlsson 1999).
- Boustead
  Dr. Ian Boustead is a well known LCA practitioner who developed the Boustead model and database that allows users to produce LCIs of complete systems. Boustead's focus areas are aerosols, automotive products, beverage containers, building materials, and the plastics industry. The organization is based in the United Kingdom (Boustead 1999).
- BUWAL
  BUWAL is the Swiss Agency for the Environment, Forests and Landscape (BUWAL 1999). They have several published reports on LCA. BUWAL 250 is an English version of their LCI database of several common industrial materials.
- Environmental Information and Management Explorer (EIME)
  This software design tool was developed by the *Ecobilan* group in conjunction with IBM, Alcatel, Legrand, Schneider, and Thompson. *Ecobilan* was founded in 1990 and has offices in Europe and in the United States (*Ecobilan* 1999). Version 1.4 of EIME has been released and the embedded database contains 170 modules on the most commonly used materials and subcomponents of the electronic and electric industry (EIME 1999).
- Industrial DEsign MATerials (IDEMAT)
  Dr. J.A.M. Remmerswaal and J. Rombouts of the Delft University of Technology's Section for Environmental Product Development produced this software with a database of LCI data for various industrial materials. There is a student version that was released in 1995 that is available to the public at no cost, but the availability and cost of the complete version is yet undetermined by UT. This evaluation focuses on the student version that was available to UT.
- New Jersey Institute of Technology (NJIT) Report
  NJIT's "Lifecycle Assessment of Television CRTs," (Caudill 1998) report is not a database of upstream inventory data *per se*, however, it is a preliminary LCA that includes LCI data for a CRT and therefore it was considered for use in the CDP as an upstream data source.
- Personal Computer (PC) Ecolabel Report
  This study was developed by Atlantic Consulting and IPU (Institute for Product Development of the Technical University of Denmark) for the Ecolabel Unit of the European Commission (AC and IPU 1998). The purpose of the report was to study personal computers so that an ecolabel could possibly be established. Similar to the NJIT report, this is an LCA with inventory data applicable to the CDP, but it is not a traditional database of upstream inventory data. Analysis of the inventory in the PC Ecolabel Report for the purposes of the CDP was based on Version 1.11 of the report downloaded from their website in January of 1998.
- United States Automotive Materials Partnership (USAMP)
  Formed in June 1993, this partnership set out to conduct vehicle-oriented research and development in materials and materials processing to improve the competitiveness of the U.S. auto industry (USAMP 1999). The USAMP is conducting joint research to further the development of lightweight materials for improved automotive fuel economy. The major technology groups being studied are polymer composites, light metals (including

aluminum, magnesium, etc.), engineered plastics, cast iron, steel and ceramics (USAMP 1999). The aluminum, plastics, steel and automotive industries are participating in a collaborative LCI project to produce a quantitative database of information regarding all the resources used to make, operate and dispose of a generic 3200-pound vehicle (USAMP 1999).

### 3.3 Selection Criteria

For choosing which upstream data to use for the CDP, the following 11 criteria were considered. Descriptions of each criterion and what is preferred for that category are presented below:

1. **Geographic boundaries** – Describes whether the data are representative of Europe and/or the United States. In general, U.S. data are preferred for this project, assuming most of the materials for the monitors are extracted and processed in the U.S. However, because some of the CDP manufacturing is in Asia, materials may originate from non-U.S. locations/countries.

2. **Origin of data** – Describes whether or not the data originate from primary or secondary sources. Primary sources that are clearly identified are preferred.

3. **Currency of data** – This refers to the dates that represent the actual inventory data. More recent data are preferred. If the date of the inventory data is not known, the date the database was released is considered.

4. **Public availability** – Data are categorized as either public or private. Publicly available data can be considered for the CDP.

5. **When available** – This describes whether or not the data are currently available and if not, when they are expected to be available. Immediately available means the data are available from the appropriate company or individual; however, more time may be required for UT to obtain the data. Also provided under this criterion will be whether UT currently has some of the data applicable to the CDP. Immediately available is preferred and further consideration is given to data that UT already has in house.

6. **Cost** – Due to limited resources, cost is an important factor for determining which upstream data should be obtained for the CDP. However, if possible, negotiations for or donations of data can be pursued as this is a collaborative project with industry and other stakeholders. Least costly data are preferred.

7. **Upstream life-cycle stages** – Which upstream life-cycle stages are included from each data source are identified, if possible. In some cases, the databases or reports address more than only upstream stages and other stages included will also be noted under this criterion. In the results of this analysis, we will present the names of the life-cycle stages as they are labeled in each respective data source. However, such labels may not be consistent with the specific

terminology used in this report. For use in the CDP, we prefer data sources that include materials extraction, materials processing, and associated transportation.

8. **Aggregation of data** – This describes whether or not the data from the various life-cycle stages are aggregated into one set of inventory numbers or how the data are aggregated. With less aggregation, the CDP will better be able to predict impacts particular to a specific life-cycle stage. Therefore, less aggregation is preferred. For some of the reports considered in this analysis, processes may also be aggregated for an entire product or component and therefore it is difficult to separate out the inventory for one particular material. The advantage of material-specific LCI databases is that the data are not aggregated into a larger component or product.

9. **Input/output categories** – This lists which categories of inputs and outputs are included in the database or report (e.g., non-renewable resources, fuel and energy inputs, water use, air emissions, water effluents, solid/hazardous wastes). Ideally, the input and output categories would match those defined for the CDP that will be used to calculate the impacts. The LCIA TM (Socolof 1999) describes the impact categories and how the inventory data will be used to calculate impacts. Also of interest is whether the outputs within each category are chemical specific. The more speciated the chemicals, the more desirable the data. In some cases, chemical groups or categories of chemicals are provided. The CDP LCIA methodology requires chemical-speciated data to calculate most impacts.

10. **Data quality indicators** – If the data source provides an indication of its data quality, this will help determine the data quality of the CDP. In several cases, we were not able to discern whether there were data quality indicators for a particular data set. If the data source provides some indication of data quality, this can then be incorporated into the CDP's data quality indicators for the upstream data.

11. **CDP materials included** – These are the materials that have been identified in Set. 3.1.3, which constitute the initial list of materials of interest in the CDP. They were cross-referenced with each data source under consideration. Preferred data sources are those with the greatest number of materials of interest to the CDP.

Each database or report was reviewed based on available information, and in some cases, limited information was available. This exercise was not intended to be a comprehensive review of each database, because we were not able to purchase each source. It was intended to be a cursory review of available data sources to assist in the decision of which inventory data to obtain and include in the CDP for the upstream life-cycle stages. When we could not obtain a database, our review was based on information available on company websites, other available literature on the database, personal contacts with company representatives, or third parties who have had experience with using a particular database.

Based on all this information, preferred data sources were identified. All factors were considered, including expected data quality and cost. The first most important criterion was whether the data source included many of the materials of interest to the CDP. Although additional materials may be identified during the concurrent CDP data collection efforts, we expect that the majority of materials of interest have already been identified.

## 4. RESULTS

Using the CDP decision rules, we initially identified approximately 40 materials (including some material groups) for which upstream data inventories should be included in the CDP LCA (Sect. 3.1.3). Nine data sources were evaluated to determine which upstream data would be used for these and other materials that might be identified. Tables 5 and 6 present a comparison of the data sources evaluated. Table 5 lists the first ten criteria presented in Sect. 3.3, which are related to the type of data provided, availability of the data, and cost. Table 6 cross-references the materials of interest in the CDP to the materials found in the various data sources (the 11$^{th}$ criterion in Sect. 3.3). Together this information was used to identify which data are preferred for use in the CDP as upstream inventory data. Brief discussions of each data source and a final conclusion are presented below.

Referring to Table 5, APC data are not yet available and it is uncertain if they will be available as scheduled, as they were expected to be released in previous years but were not. Therefore, APC is not considered further in this analysis. USAMP inventory data, which were intended only for participating organizations is not a publicly available data set. Therefore, USAMP as a source of upstream data for the CDP is also excluded from further analysis. The remaining seven data sources are evaluated by analyzing Tables 5 and 6.

The eleven criteria described above (Sect. 3.3) can be condensed into three major areas:

- Cost;
- Data quality; and
- Applicability to CDP.

Each source will be described in terms of these criteria, without giving a particular weight to any one over another. Note that the "data quality" criterion is a combination of the origin of the data, the currency of the data, the upstream life-cycle stages included, data quality indicators, and to some extent, the geographic boundaries of the data (see Table 5). The "applicability to the CDP" criterion depends on which upstream life-cycle stages are included, how the data are aggregated, what input and output categories are included (including whether or not the output data are speciated), whether data quality indicators are provided, and which materials of interest to the CDP are included.

**Table 5. Selected criteria of upstream data sources**

| | APC | APME | Boustead | BUWAL 250 | EIME | IDEMAT | NJIT LCA | PC Ecolabel | UPAMP |
|---|---|---|---|---|---|---|---|---|---|
| **Geographic boundaries** | U.S. | Europe | Europe | Europe | U.S. & Europe | Netherlands & Europe | U.S. | Europe | U.S. |
| **Origin of data** | Unknown | Primary | Primary | Secondary | Majority is primary, some secondary | Unknown | Secondary | Secondary | Unknown |
| **Currency of data** | 1990s | 1990s (varies per material) | Unknown | 1996 | 1990s (varies) | Second Student version, released in 1995 | 1970s - 1990s | Not completely determined, but most appear to be 1990s | 1990s |
| **Public availability** | Public | Public | Public | Public | Public | Public (student version); unknown for complete version | Public | Public | Public |
| **When available** | Expected to be released in 1999 | Immediate (UT has 2 applicable materials) | Immediate | Immediate (UT has 6 applicable materials) | Immediate | Immediate (UT has 9 applicable materials; unknown if complete version can be obtained) | Interim report immediately available (UT has copy) | Version 1.11 immediately available (UT has copy) | Not available to public |
| **Cost** | No cost | No cost | ~ $10,000 | ~ $250 | ~ $7,500; > $5,700 for universities (Negotiable) | No cost, unknown for complete version | No cost | Version 1.11 no cost; ~ $75 for final report | Not available to public |
| **Upstream life-cycle stages** | Unknown | Raw material extraction, material processing, transport | Process operations (including fuel production) and transport operations | Pre-combustion, combustion + processes, transports | Extraction, processing, transportation | Production, which includes transportation when noted, and not clear if extraction included | Material extraction and material synthesis | Material production, manufacturing, transport, use, EOL | Unknown |

## Table 5. Selected criteria of upstream data sources

| | APC | APME | Boustead | BUWAL 250 | EIME | IDEMAT | NJIT LCA | PC Ecolabel | UPAMP |
|---|---|---|---|---|---|---|---|---|---|
| **Aggregation of data** | Unknown | Some data presented as process-specific e.g., fuel production, transport, process) | Often classified into several processes: fuel production, fuel use, transport operations, process operations | Aggregated as "LCI" or "energy consumption," latter subclassified (e.g., final energy source, energy supply, final process energy, transport) | Aggregated over all upstream life-cycle stages for each module (material) into impact categories, system administration can access LCI data separately | Each material aggregated for all life-cycle stages for the following categories: processes, thermal energy, electrical energy, and transports | Process specific; sometimes a few subprocesses are aggregated | Aggregated by major computer components (e.g., monitor) for each life-cycle stage, not process or material specific | Unknown |
| **Input/ Output categories** | Unknown | Energy, primary fuels, and raw material inputs; air, water, and solid waste emissions; outputs mostly unspecified | Gross energy, primary fuels & feedstocks: raw materials; water use; air, water solid waste emissions; outputs provided as chemical categories and several speciated chemicals | Commercial fuels resources, feedstock resources, materials used in final stage, main product, co-products, usable wastes, waste treatment; outputs provided as chemical categories and as some speciated chemicals | Natural resources, energy, water inputs; air, water, hazardous waste outputs; outputs relatively well speciated | Material inputs (including water), energy inputs; air, water, and solid outputs; mostly unspeciated outputs | Raw material and energy inputs; solid, air, and waterborne waste outputs; outputs as chemical categories and some speciation | Resource consumption (raw materials), air emissions, water emissions, and waste; includes chemical categories, but also very well speciated | Unknown |

**Table 5. Selected criteria of upstream data sources**

| | APC | APME | Boustead | BUWAL 250 | EIME | IDEMAT | NJIT LCA | PC Ecolabel | UPAMP |
|---|---|---|---|---|---|---|---|---|---|
| **Data quality indicators** | Unknown | All calculations were referred back to participatin g companies before being used | Not provided, but data quality believed to be moderately good (above average as compared to other available sources) | Unknown | Provides high, medium, and low measures of reliability of the data | Unknown | Data were gathered on each material, carefully citing notes and references which document the original sources | Unknown | Unknown |

Key:
APC = American Plastics Council
APME = Association of Plastics Manufacturers in Europe
EIME = Environmental Information and Management Explorer
IDEMAT = Industrial DEsign MATerials
NJIT = New Jersey Institute of Technology
USAMP = U.S. Automotive Materials Partnership

## 4.1 Data Source Reviews

APME data are European-based, of moderate quality, and available for free. However, the data are mostly limited to materials of interest to the plastics industry and therefore only apply to 7 materials of interest to the CDP. The materials covered by APME constitute 17% of the product weight of the CRT described in Figure 2 and 49% of weight of the LCD in Figure 3.

The Boustead data are very expensive, of moderate quality, and include several materials of interest for the CDP, including most of the major product materials by weight of the CRTs and LCDs (55% and 85%, respectively, see Table 6). The significant material missing for the CRT is the leaded glass, which is approximately 39% of the mass of the monitor. The Boustead data include two of the ancillary materials that have been identified for the CDP, but do not include several of the other materials identified for potential environmental concern. The Boustead data are moderately equipped with speciated chemical data as required for the CDP. Data are aggregated for all upstream stages, but are also available as some individual upstream inventories (e.g., transport operations, process operations). Although data quality indicators are not provided by Boustead for the data, the Center for Clean Products and Clean Technologies assesses it as above average based on comparisons with other databases reviewed.

**Table 6. Cross-reference of preliminary CDP materials and potential upstream data sources**

| | | APME | Boustead | BUWAL 250 | EIME [4] | IDEMAT [8] | NJIT | PC Ecolabel |
|---|---|---|---|---|---|---|---|---|
| **Primary Materials** | | | | | | | | |
| 1 | ABS | Y | Y | | Y (APME) | Y | Y | Y |
| 2 | Aluminum | | Y | Y | Y | Y | Y | Y |
| 3 | Aluminum oxide | | Y | Y | Y (BUWAL) | | | |
| 4 | Aquadag | | | | | | | |
| 5 | Beryllium | | | | | Y | | |
| 6 | Bismuth oxide | | | | | Y (C) [9] | | |
| 7 | Color filters (acryl epoxy resins) | | | | Y [5] | | | |
| 8 | Copper | | Y | | Y | Y | Y | Y |
| 9 | Chromium (TFT metal) | | mining chromite ore | | (Y) | Y | | |
| 10 | Divinylbenzene resin | | | | | | | |
| 11 | Ferrite-magnet | | Y [2] | | Y [6] | | | Y |
| 12 | Frit | | | | | | | Y |
| 13 | Glass, borosilicate (LCD) | Y | Y | Y | (Y) | Y | | |
| 14 | Glass, lead oxide (CRT) | | | | | | Y | Y |
| 15 | Indium-tin oxide - ITO | | | | | | | |
| 16 | Lead | | Y | | Y | Y | Y | Y |
| 17 | Liquid crystals | | | | Y | | | |
| 18 | Mercury | | | | | Y (C) | | |
| 19 | Molybdenum (TFT metal) | | | | (Y) | Y | | |
| 20 | Nickel | | | | Y | Y | | Y |

## Table 6. Cross-reference of preliminary CDP materials and potential upstream data sources

| | | APME | Boustead | BUWAL 250 | EIME [4] | IDEMAT [8] | NJIT | PC Ecolabel |
|---|---|---|---|---|---|---|---|---|
| 21 | Phosphors: e.g., ZnS, $Y_2O_2$ | | | | | | | |
| 22 | Plexiglas [polymerization of methyl ester (methyl methacrylate)] | Y | | | Y (APME) | | | |
| 23 | Polyimide | Y | | | Y (APME) | | | |
| 24 | Polycarbonate | Y | Y | | Y (APME) | Y | Y | Y |
| 25 | Polyester | Y | | | Y (APME) | Y (C) | | |
| 26 | Polystyrene-HIPS | Y | Y | Y | Y (APME) | Y | Y | Y [11] |
| 27 | Silicon TFT materials: e.g., SiNx, SiO2 | | | | Y | Y (C) | | |
| 28 | Silicone | | | | Y | | | |
| 29 | Steel | | Y | Y | Y(BUWAL) | Y (C) | Y | Y |
| 30 | Tungsten (TFT metal) | | | | | Y | | Y |
| **Ancillary Materials** | | | | | | | | |
| 31 | Boron trichloride | | | | | | | |
| 32 | Carbon tetrafluoride | | | | | | | |
| 33 | Chlorine | | Y | Y | | | | |
| 34 | Ferric chloride | | | | | | | |
| 35 | Hydrochloric acid | | Y | | Y | | | |
| 36 | Isopropyl alcohol | | | | | | | |
| 37 | N-methyl pyrrolidone | | | | | | | |
| 38 | Polyvinyl alcohol | | | | | | | |
| 39 | Surfur hexafluoride | | | | | | | |
| 40 | Tetramethyl ammonium hydroxide | | | | | | | |
| **Totals** | | 7 | 12 [3] | 6 | 18 (21) [7] | 12 (17) [10] | 8 | 12 |
| % contribution of CRT primary materials >= 1% by mass [1] | | 17 | 55 | 46 | 56 | 25 (52) [10] | 91 | 94 |
| % contribution of LCD primary materials >= by mass [1] | | 49 | 85 | 57 | 88 (97) [7] | 38 (96) [10] | 76 | 76 |

1. The percent mass contribution of the primary materials were summed to identify the total percent of the monitor by mass that is covered by each data source.
2. Inventory data are available for iron, which is assumed to represent ferrite-magnet.
3. The tally of chemicals for Boustead excludes mining chromite ore for chromium.
4. Cells with a Y and the name of a data source [e.g., "Y (APME)" ] indicate the data source that EIME obtained that particular inventory from, if that source is included elsewhere in this table. "(Y)" represents materials that are expected in EIME's forthcoming update.
5. "Epoxy resins" assumed to be for color filters (acryl epoxy resins).
6. The EIME database does not have ferrite-magnet listed, but it does have ferrites MnZn as a mateiral inventory.
7. The first value represents the current EIME dataset and the value in parenthesis indicates materials expected in the forthcoming update.
8. The student version of IDEMAT was the source investigated. "C" (for "complete") indicates cases where IDEMAT has the inventory on a given material only in the complete version.
9. Bismuth
10. The first value is for the student version and the value in parthenthesis is for the complete version.
11. The study only listed polystyrene (PS) and did not indicate if it was high-impact polystyrene (HIPS).

BUWAL 250 is a relatively inexpensive database that is also European data and believed to be from secondary sources. Therefore, the data quality is marginal and its applicability to the CDP is also relatively low as it only appears to cover the least number of materials of interest. Some chemical speciation is provided as output data and the inventories are aggregated over the upstream processes.

EIME appears to be the best candidate for the purposes of the CDP as it is targeted specifically for the electronics industry and includes many of the materials of interest to the CDP (Table 6). The current version includes 18 materials and, with forthcoming updates to the database, there are expected to be 21 materials covered (Karlsson 1999), representing 56% of the materials by mass of the CRT and 97% of the LCD. The low CRT percent is again due to the lack of leaded glass, which is 39% of the CRT. These data also include important materials not included in the weight criterion such as liquid crystals, lead, silicon materials, and color filters. Each of these, with the exception of lead are not found in any other data sources reviewed. The EIME inventory output data appear to be relatively well speciated, but the inventory data in general cannot be separated into each upstream life-cycle stage. The data quality is adequate as some data are from the U.S. and from primary sources. The data specific to the electronics components are from the five industrial partners and their suppliers, while some of the other common industrial materials were obtained from other LCI databases (EIME 1999). The cost is relatively high; however it covers the cost of the entire life-cycle software tool. Discussions with *Ecobilan* representatives have revealed their willingness to negotiate for the use of some material inventory data, provided we supply our results to them in a desirable format. Alternatively, we would be required to purchase the entire software package to obtain the desired inventory data.

The student version of IDEMAT is another free set of data that is European-based. The true quality of the data is not yet well determined by UT. Several (12) CDP materials are included in the student version, and it is believed that 17 would be covered with the complete version. IDEMAT has a few materials, metals in particular, that are not found in any of the other data sources reviewed.

The NJIT LCA report provides only eight material inventories relevant to the CDP; however, because it is an LCA of a television with a CRT, it includes leaded glass, which is not commonly found in existing databases. Some of the inventory data, which are U.S.-based, are from relatively old secondary sources (*circa* 1970). Furthermore, not all outputs are quantified. The report includes two upstream life-cycle stages: materials extraction and "materials synthesis" (referred to as "materials processing" in the CDP). Transportation within these upstream stages is not included. Data are easily identified per material, and some chemical speciation is included. This report does not provide sufficient amount of upstream data to be used exclusively, but given that it is available at no cost, it may supplement missing data (e.g., leaded glass).

The PC Ecolabel LCA is a report that includes 12 of the materials of interest in the CDP in its study and has very well speciated output data. UT has obtained a copy of Version 1.11 at no charge. It is based on European data and of undetermined quality. This was a study that was intended to present results of the life-cycle impacts of a PC and is not intended to be a database of material inventories. UT chose to evaluate this as a potential source for upstream data because of the relevant subject matter of the LCA. And although it covers several materials of interest, the inventory data cannot be separated into individual material inventories. Data are presented for different life-cycle stages, but not provided on a material basis. Therefore, this report could be helpful for checking our final results of the LCA, but not for providing upstream inventories of specific materials.

## 4.2 Conclusion

To identify the priorities for using upstream data, we would prefer to use as much data from one source as possible to help ensure consistency and thus improve the data quality of the results of the CDP. We have selected to target EIME as the primary source of upstream data. However, what is seen from the information in Table 6 is that no one data source will completely encompass the product materials of the CDP. Twelve of the 40 materials were not covered by any data source. EIME includes the greatest number, yet even including the expected updates to EIME, ten primary materials and nine ancillary materials are not covered by EIME. Four of the ten primary materials and eight of the nine ancillary materials were not covered by any other data sources. Six materials that are not in EIME are believed to be in other data sources. These include the following: beryllium, bismuth oxide, frit, leaded glass, mercury, and tungsten. Beryllium and tungsten are in the student version of IDEMAT and bismuth and mercury are in the complete version of IDEMAT. The NJIT and PC Ecolabel studies include leaded glass and the PC Ecolabel study also includes frit. The NJIT report, however, does not quantify the outputs from leaded glass production. Furthermore, because the PC Ecolabel study's inventory is aggregated over the whole monitor, individual inventory data cannot be produced for the specific materials. Therefore, IDEMAT data and the quantified inputs from the NJIT report may help supplement the EIME data.

Subsequent work for the CDP revealed that Ecobalance also had DEAM data available that supplemented the EIME data, both of which were listed as upstream data sources for this project. Procuring EIME requires negotiations with *Ecobilan* for a reduced price. This will begin subsequent to the final approval of this TM by EPA and the CDP Core and Technical Work Groups. In the event we cannot procure the EIME data for a reduced price, we will try to rely on the no cost options of APME, IDEMAT and NJIT data. Together, these three data sources cover 17 materials with the IDEMAT student version or 20 with the complete version. Relying on several material inventories from each of the three sources will reduce consistency in our upstream data and thus reduce the data quality in the CDP. For materials not included in the data sources obtained, UT will attempt to find the data from primary or secondary sources.

# 5. LIMITATIONS AND UNCERTAINTIES

Information on the different databases were from personal communications, websites, and in some cases, review of selected inventories obtained for a database. Copies of the NJIT and Ecolabel reports were available for review. This evaluation of upstream sources was not intended to be a comprehensive assessment of each data source, but instead a cursory review to evaluate which data to pursue. Therefore, there remain uncertainties to the information presented in this TM, but it is believed that adequate information was available to make recommendations in this report.

Using secondary data will also have an effect on the limitations of the CDP results. Using secondary data that are not tailored to the specific goals and boundaries of a project limits the quality of the data. However, due to the large data collection efforts in the LCA, priorities are given to collecting data. Thus, secondary sources have been chosen for upstream inventories and primary sources will be approached for monitor and component manufacturing data, as well as some end-of-life processes.

Once the upstream data are incorporated into the CDP, limitations in those databases will be transferred to limitations in the CDP. Furthermore, the use of more than one database (e.g., EIME supplemented by NJIT and IDEMAT) will reduce consistency in our upstream data and thus somewhat reduce the data quality in the CDP. However, it should be noted that the upstream data are only one portion of the overall inventory of the product systems being evaluated.

## ACRONYMS/ABBREVIATIONS

| | | |
|---|---|---|
| ABS | = | Acrylonitrile butadiene styrene |
| APC | = | American Plastics Council |
| APME | = | Association of Plastics Manufacturers in Europe |
| BUWAL | = | The Swiss Agency for the Environment, Forests and Landscape |
| CDP | = | Computer Display Project |
| CRT | = | Cathode ray tube |
| DEAM | = | Database for environmental Analysis and Management |
| EIME | = | Environmental Information and Management Explorer |
| IDEMAT | = | Industrial DEsign MATerials |
| IPA | = | Isopropyl alcohol |
| IPU | = | Institute for Product Development of the Technical University of Denmark |
| HIPS | = | High impact polystyrene |
| LCA | = | Life-cycle assessment |
| LCD | = | Liquid crystal display |
| LCI | = | Life-cycle inventory |
| LCIA | = | Life-cycle impact assessment |
| LDPE | = | Low density polyethylene |
| NJIT | = | New Jersey Institute of Technology |
| NMP | = | N-methyl pyrrolidone |
| PC | = | Personal computer |
| PS | = | Polystyrene |
| PE | = | Polyethylene |
| PET | = | Polyethylene terephthalate |
| PP | = | Polypropylene |
| PVC | = | Polyvinyl chloride |
| PWB | = | Printed wiring board |
| TFT | = | Thin-film transistor |
| TM | = | Technical memorandum |
| TMAH | = | Tetramethyl ammonium hydroxide |
| USAMP | = | United States Automotive Materials Partnership |

## REFERENCES

APC (American Plastics Council). 1999. Web site available at http://www.ameriplas.org/apcorg/about_apc/about_apc.html.

APME (Association of Plastic Manufacturers in Europe). 1999. Web site entitled, "Life Cycle Assessment (LCA). A Guide to Approaches, Experiences and Information Sources," under heading, "Sort by Organisation Name," available at http://tiger.eea.eu.int/projects/EnvMaST/lca/kap451.htm.

AC (Atlantic Consulting) and IPU (Institute for Product Development of the Technical University of Denmark). 1998. *LCA Study of the Product Group Personal Computers in the EU Ecolabel Scheme*, Version 1.11. January.

Boustead. 1999. Web site entitled, "Life Cycle Assessment (LCA). A Guide to Approaches, Experiences and Information Sources," under heading, "Sort by Organisation Name," available at http://tiger.eea.eu.int/projects/EnvMaST/lca/kap451.htm.

BUWAL. 1999. Web site entitled, "Life Cycle Assessment (LCA). A Guide to Approaches, Experiences and Information Sources," under heading, "Sort by Organisation Name," available at http://tiger.eea.eu.int/projects/EnvMaST/lca/kap451.htm.

Caudill, R. J. 1998. *Interim Report from the Multi-lifecycle Engineering and Manufacturing Program: Lifecycle Assessment of Television CRTs*. Multi-lifecycle Engineering Research Center, New Jersey Institute of Technology. Newark, NJ. May 20.

ChemFinder. 1998. CS ChemFinder web site available at chemfinder/camsoft.com, downloaded December, 1998.

DisplaySearch. 1998. *DisplaySearch FPD Equipment and Materials Analysis and Forecast*. Austin, TX. June.

*Ecobilan*. 1999. Web site entitled, "Life Cycle Assessment (LCA). A Guide to Approaches, Experiences and Information Sources," under heading, "Sort by Organisation Name," available at http://tiger.eea.eu.int/projects/EnvMaST/lca/kap451.htm.

ETC. 1980. *Encyclopedia of Chemical Technology, 3rd Edition*, Vol. 11, 1980, p. 847.

EIME. 1999. Web site available at http://www.ecobalance.com/software/eime/eime_ovr.htm.

EPA (Environmental Protection Agency). 1998. Web site available at http://www.epa.gov, downloaded December.

FCR (Fuji Chimera Research). 1996. *The Future of Liquid Crystal and Related Display Materials*, p. 12, translated by InterLingua Linguistic Services, Inc. Redondo Beach, CA 1997.

Glazebrook, B. 1999. Personal communication with B. Glazebrook, *Ecobilan* (Ecobalance), and M. L. Socolof, University of Tennessee. May.

IDEMAT. 1995. Delft University of Technology, *Industrial DEsign MATerials software.*

Hentges, S. 1999. Personal communication with S. Hentges, American Plastics Council, and L. Lasher, University of Tennessee. February 1.

Karlsson, M. 1999. Personal communication with M. Karlsson, IBM Engineering Center for Environmentally Conscious Products, and M. L. Socolof, University of Tennessee. March 1 and July 8.

Klaassen, C. D., M. O. Amdur, and J. Doull. 1986. *Casarett and Doull's Toxicology The Basic Science of Poisons, 3rd Edition.* Macmillan Publishing Co., New York, NY.

Menke, D., G. A. Davis, and B. W. Vignon 1996. *Evaluation of Life-Cycle Assessment Tools.* University of Tennessee, Knoxville, TN. August 30.

MCC (Microelectronics and Computer Technology Corporation). 1993. *Environmental Consciousness: A Strategic Competitiveness Issue for the Electronics and Computer Industry.* Austin, TX.

MCC. 1994. *Electronics Industry Environmental Roadmap.* Austin, TX

MCC. 1998. *Computer Display Industry and Technology Profile.* EPA 744-R-98-005.

O'Mara, W. C. 1993. "Liquid Crystal Flat Panel Displays." *Manufacturing Science and Technology.* New York, NY.

Socolof, M. L. 1999. *Draft Technical Memorandum Life-Cycle Impact Assessment Methodology for the Computer Display Project.* University of Tennessee. March 25.

SRC (Syracuse Research Corporation). 1998. Web site available at esc.syrres.com, downloaded December.

USAMP (United States Automotive Materials Partnership). 1999. Web site available at http://www.uscar.org/index.htm.

# APPENDIX E

## TECHNICAL MEMORANDUM:
## Electrical Energy Grid Life-Cycle Inventories for the CDP

this page intentionally left blank

# APPENDIX E

## TECHNICAL MEMORANDUM:
## Electrical Energy Grid Life-Cycle Inventories for the CDP

## 1. INTRODUCTION

### 1.1 Background

The U.S. Environmental Protection Agency's (EPA) Design for the Environment (DfE) Program Computer Display Project (CDP) is conducting a combined Cleaner Technologies Substitutes Assessment (CTSA) and life-cycle assessment (LCA) to evaluate the relative environmental impacts, cost, and performance of cathode ray tube (CRT) and active matrix liquid crystal display (AMLCD) desktop computer monitors. Initially the project is conducting an LCA to determine the relative potential environmental impacts of the monitors, including impacts from materials extraction, materials processing, manufacturing (monitor and components), use, and end-of-life disposition. Transportation information is also included within and between each stage.

LCA has four major components:

1. goal definition and scoping,
2. life-cycle inventory (LCI),
3. life-cycle impact assessment (LCIA), and
4. improvement assessment.

The LCI is a collection of inputs (materials, energy, and other resources) and outputs (products, wastes and emissions) for processes throughout the product's life cycle. The LCIA characterizes the potential relative impacts of these inputs and outputs per functional unit, where the functional unit is defined in this project as one monitor over its lifetime. Improvement assessment is the component where those who are in the position to make changes in either the design or manufacture of the product review the results and decide on ways to implement environmental improvements.

The focus of this technical memorandum (TM) is on the LCI component of the LCA. Established LCI methodology accounts for electricity requirements throughout the life cycle of a product system. Wherever electricity is used in a process in the product system, the LCI typically includes the inputs and outputs from the generation of that electricity. This TM presents the input and output inventory data that are used to calculate the impacts from electricity generation for the CDP. The inventory data were developed by the University of Tennessee Center for Clean Products and Clean Technologies (CCPCT) from existing data for the various fuels (e.g., coal, petroleum) used by electric utilities around the United States. Two inventories illustrate the amount of materials consumed (inputs) and pollutants released (outputs) to generate one kilowatthour (kWh) of electricity, based on the average U.S. and the average Japanese electrical grids. The data are presented in units of grams of material input or emission output per kWh (g/kWh) in almost all cases, excluding radioactive emissions which are presented in Becquerels

per kWh [Bq/kWh, where a Becquerel is the Système Internationale (SI) unit for radioactivity]. All of the inputs and outputs in the electric grid inventories have been multiplied by the electricity consumption rate for each process in the product system where electricity is used. These input and output data are not used with LCI data collected from secondary sources that already include inputs and outputs from electricity generation. The two electric grid inventory data sets presented in this TM are for the average U.S. electrical grid and the average Japanese electric grid.

## 1.2 Boundaries of the Analysis

In addition to the geographic boundary (i.e., U.S. and Japanese data only), the boundaries of the data presented in this TM are defined by the generation categories included in the analysis (e.g., coal, nuclear) and the life-cycle stages evaluated for the various generation categories (e.g., extraction, generation). A U.S. electric grid inventory was developed first and the Japanese grid inventory is simply a modification of the U.S. inventory, which applies the average Japanese electric grid to the input and output data found for the United States. This will not account for any effects of different control technologies used in Japan compared to the United States. The majority of this TM focuses on collecting U.S. data, and mentions when the Japanese grid is applied.

Table 1 presents the electricity generation categories, associated fuels types, percent breakdown for U.S. electricity generation in 1997 and whether or not that category is included in this inventory. (While 1998 is the target year for the overall CDP, this TM was targeted for 1997 as almost no data could be obtained that was relative to 1998.) Coal is the dominant generation category and fuel type in the U.S., accounting for over 55 percent of 1997 electricity production. Non-renewable fuels (coal, gas, petroleum, and uranium) plus water (for hydroelectric plants) together provide greater than 99 percent of U.S. electricity. Table 1 also lists the average Japanese breakdown of fuels.

**Table 1. Fuel Types Used to Generate Electricity in U.S. and Japan in 1997**

| Generation Category | Fuel | U.S. Generation % Breakdown | Japanese % Breakdown | Included in Electric Grid Analysis? |
|---|---|---|---|---|
| Coal | Coal | 57.23% | 18% | Yes |
| Gas | Gas | 9.07% | 20% | Yes |
| Petroleum | Petroleum | 2.53% | 21% | Yes |
| Nuclear | Uranium | 20.14% | 31% | Yes |
| Hydro | Water | 10.79% | 9% | No |
| Renewables | Wind, biomass, heat from sun, heat from earth | 0.24% | 1% | No |
| **Total** | | 100% | 100% | |

Sources: EIA 1999a, EIA 1997.

Individual input and output inventories were developed for each of the generation categories listed in Table 1, except hydro and renewables. Hydroelectric facilities, which constitute nearly 11% of the U.S. electric grid, were excluded due to the scarcity of data on hydroelectric inputs and outputs. Known impacts of hydroelectric facilities primarily relate to

reservoir formation, which includes habitat destruction and its concurrent effects on biodiversity, and the generation of the greenhouse gases methane and carbon dioxide from the flooding of wetlands during and after reservoir formation. Habitat destruction is not included as an impact category *per se* within the CDP LCIA methodology (see Chapter 3 of main report), but global warming is included. Furthermore, EPA has concluded there is currently no adequate basis for estimating the emissions and sinks from the flooding of wetlands (EPA 1998a).

Renewables were excluded because they accounted for only a small fraction (0.24%) of total U.S. electricity production in 1997. In addition, little or no data exist on material inputs and pollutant outputs for renewable electricity generation processes.

The following life-cycle stages are associated with electricity generation:

- Extraction of ores and fluids from the earth and any necessary transportation to the initial processing point (Materials Extraction);
- Initial and secondary processing of those ores/fluids into usable fuels, and the associated transportation between processing points and to the generating stations (Materials Processing);
- Combustion or use of the fuel and the onsite control of pollutants, and transmission and distribution of the generated electricity to the points of use (Manufacturing);

*NOTE: This description excludes the process flows of renewable energy sources.*

Little or no data were available for the extraction and initial and secondary processing of ores and fluids into fuels, except for some data for coal extraction and processing. Therefore, most of the electrical grid input and output data presented in this TM only include the manufacturing life-cycle stage (generation and transmission and distribution of electricity) as shown in Table 2.

**Table 2. Fuel Life-Cycle Substages Captured in Electric Grid LCI Data**

| Life-Cycle Substages | Coal | Gas | Petroleum | Uranium |
|---|---|---|---|---|
| Extraction | P | N | N | N |
| Transport to Initial Processing | N | N | N | N |
| Initial Processing | P | N | N | N |
| Transport to secondary processing | NA | NA | NA | N |
| Secondary processing | NA | NA | NA | N |
| Transport to generating stations | N | N | N | N |
| Electricity generation | I | I | I | I |
| Transmission and Distribution | I | I | I | I |

I = Included in inventory; P = Partially included in inventory; N = Not included in inventory; NA = Not applicable.

It should also be noted that this electric grid inventory relates only to *utility*-based generation. Electric power generation in the Unites States can be broken down into two main categories: utility and nonutility. In simplified terms, most electricity generating entities that are not classified as utilities fall in the nonutility category, and include many cogeneration facilities and small and independent power producers. About 65% of nonutility production is attributed to

the manufacturing sector (EIA 1998a), and nonutility production as a whole constitutes just over 10% of the total power produced by the electric power industry. The inputs and outputs of nonutility electricity production are excluded here due to a lack of detailed data on the associated emissions and wastes.

### 1.3 Organization of the TM

The remainder of this document provides supporting information on the development of the electric grid data. It is organized into six sections: results summary, methodology, fuel-specific results, data sources and quality, limitations and conclusions. Supporting tables are presented as necessary in the Appendices.

## 2. RESULTS SUMMARY

Table 3a presents the primary and ancillary materials consumed and products and environmental burdens produced during the generation of 1 kilowatthour (kWh) in the United States, based on the national 1997 generation percent breakdown (see Table 1). Similarly, Table 3b presents the inventory for the Japanese grid. All inputs and outputs listed in Tables 3a and b are presented on a per kWh basis.

Section 3 of this TM discusses the methods used to calculate the nationwide U.S. electric grid inventory data. Spreadsheets were used to organize and manipulate all of the inventory data, and those spreadsheets are shown in Attachments A through E and contain supporting data source, assumptions, and limitations information.

**Table 3a. U.S. Electricity Generation Inventory [inputs and outputs per kWh (3.6 MJ)]**

| Material | Quantity | Units | Input/output | Input/output type | Disposition |
|---|---|---|---|---|---|
| **PRIMARY INPUTS** | | | | | |
| Coal, avg. (in ground) | 2.83E+02 | G | Input | Primary material | |
| Natural gas | 2.20E+01 | G | Input | Primary material | |
| Petroleum (in ground) | 5.99E+00 | G | Input | Primary material | |
| Uranium, yellowcake | 7.64E-03 | G | Input | Primary material | |
| **ANCILLARY INPUTS** | | | | | |
| Lime | 1.67E+00 | G | Input | Ancillary material | |
| Limestone | 3.79E+00 | G | Input | Ancillary material | |
| Water | 1.79E+03 | G | Input | Water | |
| **PRODUCT** | | | | | |
| Electricity | 1.00E+00 | KWH | Output | Energy | |
| **AIR EMISSIONS** | | | | | |
| 1,1,1-Trichloroethane | 3.02E-06 | G | Output | Airborne | air |
| 1,2-Dichloroethane | 5.65E-06 | G | Output | Airborne | air |
| 2,3,7,8-TCDD | 2.02E-12 | G | Output | Airborne | air |
| 2,3,7,8-TCDF | 7.20E-12 | G | Output | Airborne | air |
| 2,4-Dinitrotoluene | 3.96E-08 | G | Output | Airborne | air |
| 2-Chloroacetophenone | 9.89E-07 | G | Output | Airborne | air |
| 2-Methylnaphthalene | 4.20E-09 | G | Output | Airborne | air |
| 5-Methyl chrysene | 3.11E-09 | G | Output | Airborne | air |
| Acenaphthene | 8.94E-08 | G | Output | Airborne | air |
| Acenaphthylene | 3.55E-08 | G | Output | Airborne | air |
| Acetaldehyde | 8.05E-05 | G | Output | Airborne | air |
| Acetophenone | 2.12E-06 | G | Output | Airborne | air |
| Acrolein | 4.10E-05 | G | Output | Airborne | air |
| Anthracene | 3.07E-08 | G | Output | Airborne | air |
| Antimony | 6.87E-06 | G | Output | Airborne | air |
| Arsenic | 5.91E-05 | G | Output | Airborne | air |
| Barium | 3.24E-06 | G | Output | Airborne | air |
| Benzene | 1.84E-04 | G | Output | Airborne | air |
| Benzo[a]anthracene | 1.46E-08 | G | Output | Airborne | air |
| Benzo[a]pyrene | 5.37E-09 | G | Output | Airborne | air |
| Benzo[b,j,k]fluoranthene | 1.68E-08 | G | Output | Airborne | air |
| Benzo[g,h,i]perylene | 5.68E-09 | G | Output | Airborne | air |
| Benzyl chloride | 9.89E-05 | G | Output | Airborne | air |
| Beryllium | 3.01E-06 | G | Output | Airborne | air |
| Biphenyl | 2.40E-07 | G | Output | Airborne | air |
| Bromoform | 5.51E-06 | G | Output | Airborne | air |
| Bromomethane | 2.26E-05 | G | Output | Airborne | air |

**Table 3a. U.S. Electricity Generation Inventory [inputs and outputs per kWh (3.6 MJ)]**

| Material | Quantity | Units | Input/output | Input/output type | Disposition |
|---|---|---|---|---|---|
| Cadmium | 7.59E-06 | G | Output | Airborne | air |
| Carbon dioxide | 7.00E+02 | G | Output | Airborne | air |
| Carbon disulfide | 1.84E-05 | G | Output | Airborne | air |
| Carbon monoxide | 1.27E-01 | G | Output | Airborne | air |
| Chloride ions | 2.86E-04 | G | Output | Airborne | air |
| Chlorobenzene | 3.11E-06 | G | Output | Airborne | air |
| Chloroform | 8.33E-06 | G | Output | Airborne | air |
| Chromium (III) | 3.83E-05 | G | Output | Airborne | air |
| Chromium (VI) | 1.14E-05 | G | Output | Airborne | air |
| Chrysene | 1.61E-08 | G | Output | Airborne | air |
| Cobalt | 1.91E-05 | G | Output | Airborne | air |
| Copper | 1.57E-06 | G | Output | Airborne | air |
| Cumene | 7.49E-07 | G | Output | Airborne | air |
| Cyanide (-1) | 3.53E-04 | G | Output | Airborne | air |
| Di(2-ethylhexyl)phthalate | 1.03E-05 | G | Output | Airborne | air |
| Dibenzo[a,h]anthracene | 1.38E-09 | G | Output | Airborne | air |
| Dichloromethane | 4.10E-05 | G | Output | Airborne | air |
| Dimethyl sulfate | 6.78E-06 | G | Output | Airborne | air |
| Dioxins, remaining unspeciated | 9.21E-11 | G | Output | Airborne | air |
| Ethyl Chloride | 5.93E-06 | G | Output | Airborne | air |
| Ethylbenzene | 1.33E-05 | G | Output | Airborne | air |
| Ethylene dibromide | 1.70E-07 | G | Output | Airborne | air |
| Fluoranthene | 1.06E-07 | G | Output | Airborne | air |
| Fluorene | 1.32E-07 | G | Output | Airborne | air |
| Fluoride | 3.08E-05 | G | Output | Airborne | air |
| Formaldehyde | 1.33E-04 | G | Output | Airborne | air |
| Furans, remaining unspeciated | 1.47E-10 | G | Output | Airborne | air |
| Hexane | 9.46E-06 | G | Output | Airborne | air |
| Hydrochloric acid | 1.70E-01 | G | Output | Airborne | air |
| Hydrofluoric acid | 2.12E-02 | G | Output | Airborne | air |
| Indeno(1,2,3-cd)pyrene | 1.04E-08 | G | Output | Airborne | air |
| Isophorone | 8.19E-05 | G | Output | Airborne | air |
| Lead | 2.01E-05 | G | Output | Airborne | air |
| Magnesium | 1.55E-03 | G | Output | Airborne | air |
| Manganese | 7.18E-05 | G | Output | Airborne | air |
| Mercury | 1.18E-05 | G | Output | Airborne | air |
| Methane | 1.02E+00 | G | Output | Airborne | air |
| Methyl chloride | 7.49E-05 | G | Output | Airborne | air |
| Methyl ethyl ketone | 5.51E-05 | G | Output | Airborne | air |

**Table 3a. U.S. Electricity Generation Inventory [inputs and outputs per kWh (3.6 MJ)]**

| Material | Quantity | Units | Input/output | Input/output type | Disposition |
|---|---|---|---|---|---|
| Methyl hydrazine | 2.40E-05 | G | Output | Airborne | air |
| Methyl methacrylate | 2.83E-06 | G | Output | Airborne | air |
| Methyl tert-butyl ether | 4.94E-06 | G | Output | Airborne | air |
| Molybdenum | 9.20E-07 | G | Output | Airborne | air |
| Naphthalene | 2.88E-06 | G | Output | Airborne | air |
| Nickel | 1.08E-04 | G | Output | Airborne | air |
| Nitrogen oxides | 1.85E+00 | G | Output | Airborne | air |
| Nitrous oxide | 5.35E-03 | G | Output | Airborne | air |
| o-xylene | 8.99E-08 | G | Output | Airborne | air |
| PM-10 | 9.10E-02 | G | Output | Airborne | air |
| Phenanthrene | 3.95E-07 | G | Output | Airborne | air |
| Phenol | 2.26E-06 | G | Output | Airborne | air |
| Phosphorus (yellow or white) | 7.80E-06 | G | Output | Airborne | air |
| Propionaldehyde | 5.37E-05 | G | Output | Airborne | air |
| Pyrene | 5.25E-08 | G | Output | Airborne | air |
| Selenium | 1.84E-04 | G | Output | Airborne | air |
| Styrene | 3.53E-06 | G | Output | Airborne | air |
| Sulfur dioxide | 3.93E+00 | G | Output | Airborne | air |
| TOCs, remaining unspeciated | 9.07E-03 | G | Output | Airborne | air |
| Tetrachloroethylene | 6.07E-06 | G | Output | Airborne | air |
| Toluene | 4.00E-05 | G | Output | Airborne | air |
| Vanadium | 2.77E-05 | G | Output | Airborne | air |
| Vinyl acetate | 1.07E-06 | G | Output | Airborne | air |
| Xylene (mixed isomers) | 5.23E-06 | G | Output | Airborne | air |
| Zinc (elemental) | 2.40E-05 | G | Output | Airborne | air |
| **WATER RELEASES** | | | | | |
| Sulfate ion (-4) | 1.08E-01 | G | Output | Waterborne | surface water |
| Suspended solids | 2.80E-03 | G | Output | Waterborne | surface water |

**Table 3a. U.S. Electricity Generation Inventory [inputs and outputs per kWh (3.6 MJ)]**

| Material | Quantity | Units | Input/output | Input/output type | Disposition |
|---|---|---|---|---|---|
| **WASTE** | | | | | |
| Coal waste | 8.01E+01 | G | Output | Solid waste | landfill |
| Dust/sludge | 3.10E+01 | G | Output | Solid waste | landfill |
| Fly/bottom ash | 2.00E+01 | G | Output | Solid waste | landfill |
| Low-level radioactive waste | 2.77E-03 | G | Output | Radioactive waste | landfill |
| Uranium, depleted | 8.30E-04 | G | Output | Radioactive waste | landfill |
| **RADIOACTIVE AIR EMISSIONS** | | | | | |
| Argon-41 (isotope) | 2.51E+01 | Bq | Output | Radioactivity | air |
| Bromine-89 (isotope) | 2.91E-06 | Bq | Output | Radioactivity | air |
| Bromine-90 (isotope) | 1.18E-06 | Bq | Output | Radioactivity | air |
| Cesium-134 (isotope) | 7.99E-05 | Bq | Output | Radioactivity | air |
| Cesium-137 (isotope) | 6.02E-04 | Bq | Output | Radioactivity | air |
| Chromium-51 (isotope) | 1.58E-03 | Bq | Output | Radioactivity | air |
| Cobalt-57 (isotope) | 4.24E-06 | Bq | Output | Radioactivity | air |
| Cobalt-58 (isotope) | 5.41E+00 | Bq | Output | Radioactivity | air |
| Cobalt-60 (isotope) | 4.07E-04 | Bq | Output | Radioactivity | air |
| Iodine-131 (isotope) | 1.90E-03 | Bq | Output | Radioactivity | air |
| Iodine-132 (isotope) | 3.86E-04 | Bq | Output | Radioactivity | air |
| Iodine-133 (isotope) | 1.76E+00 | Bq | Output | Radioactivity | air |
| Iodine-134 (isotope) | 2.00E-03 | Bq | Output | Radioactivity | air |
| Iodine-135 (isotope) | 1.01E-04 | Bq | Output | Radioactivity | air |
| Krypton-85 (isotope) | 4.17E+01 | Bq | Output | Radioactivity | air |
| Krypton-85M (isotope) | 2.02E+00 | Bq | Output | Radioactivity | air |
| Krypton-87 (isotope) | 7.52E-01 | Bq | Output | Radioactivity | air |
| Krypton-88 (isotope) | 3.53E+00 | Bq | Output | Radioactivity | air |
| Manganese-54 (isotope) | 2.24E-05 | Bq | Output | Radioactivity | air |
| Niobium-95 (isotope) | 8.89E-07 | Bq | Output | Radioactivity | air |
| Rubidium-88 (isotope) | 8.26E-03 | Bq | Output | Radioactivity | air |
| Silver-110M (isotope) | 2.65E-08 | Bq | Output | Radioactivity | air |
| Technetium-99M (isotope) | 1.19E-07 | Bq | Output | Radioactivity | air |
| Tritium-3 (isotope) | 5.90E+01 | Bq | Output | Radioactivity | air |
| Xenon-131M (isotope) | 3.40E+00 | Bq | Output | Radioactivity | air |
| Xenon-133 (isotope) | 4.91E+02 | Bq | Output | Radioactivity | air |
| Xenon-133M (isotope) | 3.26E+01 | Bq | Output | Radioactivity | air |
| Xenon-135 (isotope) | 1.85E+01 | Bq | Output | Radioactivity | air |
| Xenon-135M (isotope) | 3.54E-01 | Bq | Output | Radioactivity | air |
| Xenon-138 (isotope) | 1.17E+00 | Bq | Output | Radioactivity | air |

**Table 3a. U.S. Electricity Generation Inventory [inputs and outputs per kWh (3.6 MJ)]**

| Material | Quantity | Units | Input/output | Input/output type | Disposition |
|---|---|---|---|---|---|
| Zirconium-95 (isotope) | 2.30E-06 | Bq | Output | Radioactivity | air |
| **RADIOACTIVE WATER RELEASES** | | | | | |
| Antimony-124 (isotope) | 1.24E-02 | Bq | Output | Radioactivity | surface water |
| Antimony-125 (isotope) | 4.95E-02 | Bq | Output | Radioactivity | surface water |
| Barium-140 (isotope) | 9.21E-04 | Bq | Output | Radioactivity | surface water |
| Cesium-134 (isotope) | 3.32E-02 | Bq | Output | Radioactivity | surface water |
| Cesium-136 (isotope) | 3.84E-14 | Bq | Output | Radioactivity | surface water |
| Cesium-137 (isotope) | 4.99E-02 | Bq | Output | Radioactivity | surface water |
| Chromium-51 (isotope) | 5.98E-02 | Bq | Output | Radioactivity | surface water |
| Cobalt-57 (isotope) | 1.45E-03 | Bq | Output | Radioactivity | surface water |
| Cobalt-58 (isotope) | 5.90E-01 | Bq | Output | Radioactivity | surface water |
| Cobalt-80 (isotope) | 1.55E-01 | Bq | Output | Radioactivity | surface water |
| Iodine-131 (isotope) | 2.76E-02 | Bq | Output | Radioactivity | surface water |
| Iodine-132 (isotope) | 1.05E-02 | Bq | Output | Radioactivity | surface water |
| Iodine-133 (isotope) | 1.18E-02 | Bq | Output | Radioactivity | surface water |
| Iodine-135 (isotope) | 8.49E-03 | Bq | Output | Radioactivity | surface water |
| Iron-55 (isotope) | 1.41E-01 | Bq | Output | Radioactivity | surface water |
| Iron-59 (isotope) | 7.24E-03 | Bq | Output | Radioactivity | surface water |
| Krypton-85M (isotope) | 3.73E-02 | Bq | Output | Radioactivity | surface water |
| Lanthanum-140 (isotope) | 9.86E-04 | Bq | Output | Radioactivity | surface water |
| Manganese-54 (isotope) | 3.94E-02 | Bq | Output | Radioactivity | surface water |
| Molybdenum-99 (isotope) | 7.44E+04 | Bq | Output | Radioactivity | surface water |
| Niobium-95 (isotope) | 1.02E-02 | Bq | Output | Radioactivity | surface water |
| Ruthenium-103 (isotope) | 1.24E-03 | Bq | Output | Radioactivity | surface water |
| Silver-110M (isotope) | 1.45E-02 | Bq | Output | Radioactivity | surface water |
| Sodium-24 (isotope) | 2.21E-03 | Bq | Output | Radioactivity | surface water |
| Strontium-89 (isotope) | 2.39E-03 | Bq | Output | Radioactivity | surface water |
| Strontium-90 (isotope) | 5.61E-04 | Bq | Output | Radioactivity | surface water |
| Strontium-95 (isotope) | 6.18E-03 | Bq | Output | Radioactivity | surface water |
| Sulfur-136 (isotope) | 1.33E-03 | Bq | Output | Radioactivity | surface water |
| Technetium-99M (isotope) | 8.66E-04 | Bq | Output | Radioactivity | surface water |
| Tin-113 (isotope) | 1.37E-03 | Bq | Output | Radioactivity | surface water |
| Tritium-3 (isotope) | 4.41E+02 | Bq | Output | Radioactivity | surface water |
| Xenon-131M (isotope) | 4.54E-01 | Bq | Output | Radioactivity | surface water |
| Xenon-133 (isotope) | 6.97E+01 | Bq | Output | Radioactivity | surface water |
| Xenon-133M (isotope) | 5.71E-01 | Bq | Output | Radioactivity | surface water |
| Xenon-135 (isotope) | 5.20E-01 | Bq | Output | Radioactivity | surface water |

**Table 3a. U.S. Electricity Generation Inventory [inputs and outputs per kWh (3.6 MJ)]**

| Material | Quantity | Units | Input/output | Input/output type | Disposition |
|---|---|---|---|---|---|
| Zinc-85 (isotope) | 6.65E-04 | Bq | Output | Radioactivity | surface water |

**Table 3b. Japanese Electricity Generation Inventory [inputs and outputs per kWh (3.6 MJ)]**

| Material | Quantity | Units | Input/output | Input/output type | Disposition |
|---|---|---|---|---|---|
| **PRIMARY INPUTS** | | | | | |
| Coal, avg. (in ground) | 8.88E+01 | G | Input | Primary material | |
| Natural gas | 4.85E+01 | G | Input | Primary material | |
| Petroleum (in ground) | 5.00E+01 | G | Input | Primary material | |
| Uranium, yellowcake | 1.18E-02 | G | Input | Primary material | |
| **ANCILLARY INPUTS** | | | | | |
| Lime | 5.24E-01 | G | Input | Ancillary material | |
| Limestone | 1.19E+00 | G | Input | Ancillary material | |
| Water | 1.72E+03 | G | Input | Water | |
| **PRODUCT** | | | | | |
| Electricity | 1.00E+00 | KWH | Output | Energy | |
| **AIR EMISSIONS** | | | | | |
| 1,1,1-Trichloroethane | 2.51E-06 | G | Output | Airborne | air |
| 1,2-Dichloroethane | 1.78E-06 | G | Output | Airborne | air |
| 2,3,7,8-TCDD | 6.53E-13 | G | Output | Airborne | air |
| 2,3,7,8-TCDF | 2.27E-12 | G | Output | Airborne | air |
| 2,4-Dinitrotoluene | 1.24E-08 | G | Output | Airborne | air |
| 2-Chloroacetophenone | 3.11E-07 | G | Output | Airborne | air |
| 2-Methylnaphthalene | 9.24E-09 | G | Output | Airborne | air |
| 5-Methyl chrysene | 9.77E-10 | G | Output | Airborne | air |
| Acenaphthene | 1.68E-07 | G | Output | Airborne | air |
| Acenaphthylene | 1.28E-08 | G | Output | Airborne | air |
| Acetaldehyde | 2.53E-05 | G | Output | Airborne | air |
| Acetophenone | 6.66E-07 | G | Output | Airborne | air |
| Acrolein | 1.29E-05 | G | Output | Airborne | air |
| Anthracene | 1.77E-08 | G | Output | Airborne | air |
| Antimony | 3.69E-05 | G | Output | Airborne | air |
| Arsenic | 2.72E-05 | G | Output | Airborne | air |
| Barium | 2.01E-05 | G | Output | Airborne | air |
| Benzene | 5.92E-05 | G | Output | Airborne | air |
| Benzo[a]anthracene | 3.11E-08 | G | Output | Airborne | air |
| Benzo[a]pyrene | 1.69E-09 | G | Output | Airborne | air |
| Benzo[b,j,k]fluoranthene | 1.51E-08 | G | Output | Airborne | air |

**Table 3b. Japanese Electricity Generation Inventory [inputs and outputs per kWh (3.6 MJ)]**

| Material | Quantity | Units | Input/output | Input/output type | Disposition |
|---|---|---|---|---|---|
| Benzo[g,h,i]perylene | 1.67E-08 | G | Output | Airborne | air |
| Benzyl chloride | 3.11E-05 | G | Output | Airborne | air |
| Beryllium | 1.26E-06 | G | Output | Airborne | air |
| Biphenyl | 7.55E-08 | G | Output | Airborne | air |
| Bromoform | 1.73E-06 | G | Output | Airborne | air |
| Bromomethane | 7.11E-06 | G | Output | Airborne | air |
| Cadmium | 5.48E-06 | G | Output | Airborne | air |
| Carbon dioxide | 5.98E+02 | G | Output | Airborne | air |
| Carbon disulfide | 5.78E-06 | G | Output | Airborne | air |
| Carbon monoxide | 1.09E-01 | G | Output | Airborne | air |
| Chloride ions | 2.39E-03 | G | Output | Airborne | air |
| Chlorobenzene | 9.77E-07 | G | Output | Airborne | air |
| Chloroform | 2.62E-06 | G | Output | Airborne | air |
| Chromium (III) | 2.15E-05 | G | Output | Airborne | air |
| Chromium (VI) | 5.22E-06 | G | Output | Airborne | air |
| Chrysene | 2.08E-08 | G | Output | Airborne | air |
| Cobalt | 4.60E-05 | G | Output | Airborne | air |
| Copper | 1.24E-05 | G | Output | Airborne | air |
| Cumene hydroperoxide | 2.35E-07 | G | Output | Airborne | air |
| Cyanide (-1) | 1.11E-04 | G | Output | Airborne | air |
| Di(2-ethylhexyl)phthalate | 3.24E-06 | G | Output | Airborne | air |
| Dibenzo[a,h]anthracene | 1.15E-08 | G | Output | Airborne | air |
| Dichloromethane | 1.29E-05 | G | Output | Airborne | air |
| Dimethyl sulfate | 2.13E-06 | G | Output | Airborne | air |
| Dioxins, remaining unspeciated | 2.90E-11 | G | Output | Airborne | air |
| Ethyl Chloride | 1.87E-06 | G | Output | Airborne | air |
| Ethylbenzene | 4.61E-06 | G | Output | Airborne | air |
| Ethylene dibromide | 5.33E-08 | G | Output | Airborne | air |
| Fluoranthene | 6.79E-08 | G | Output | Airborne | air |
| Fluorene | 7.11E-08 | G | Output | Airborne | air |
| Fluorides (F-) | 2.57E-04 | G | Output | Airborne | air |
| Formaldehyde | 3.97E-04 | G | Output | Airborne | air |
| Furans, remaining unspeciated | 4.62E-11 | G | Output | Airborne | air |
| Hexane | 2.98E-06 | G | Output | Airborne | air |
| Hydrochloric acid | 5.33E-02 | G | Output | Airborne | air |
| Hydrofluoric acid | 6.66E-03 | G | Output | Airborne | air |
| Indeno(1,2,3-cd)pyrene | 1.74E-08 | G | Output | Airborne | air |
| Isophorone | 2.58E-05 | G | Output | Airborne | air |

**Table 3b. Japanese Electricity Generation Inventory [inputs and outputs per kWh (3.6 MJ)]**

| Material | Quantity | Units | Input/output | Input/output type | Disposition |
|---|---|---|---|---|---|
| Lead (Pb, ore) | 1.71E-05 | G | Output | Airborne | air |
| Magnesium | 4.89E-04 | G | Output | Airborne | air |
| Manganese (Mn, ore) | 4.24E-05 | G | Output | Airborne | air |
| Mercury | 4.59E-06 | G | Output | Airborne | air |
| Methane | 3.16E-03 | G | Output | Airborne | air |
| Methyl chloride | 2.35E-05 | G | Output | Airborne | air |
| Methyl ethyl ketone | 1.73E-05 | G | Output | Airborne | air |
| Methyl hydrazine | 7.55E-06 | G | Output | Airborne | air |
| Methyl methacrylate | 8.88E-07 | G | Output | Airborne | air |
| Methyl tert-butyl ether | 1.55E-06 | G | Output | Airborne | air |
| Molybdenum | 6.01E-06 | G | Output | Airborne | air |
| Naphthalene | 8.60E-06 | G | Output | Airborne | air |
| Nickel | 5.72E-04 | G | Output | Airborne | air |
| Nitrogen oxides | 1.58E+00 | G | Output | Airborne | air |
| Nitrous oxide | 4.34E-03 | G | Output | Airborne | air |
| o-xylene | 7.50E-07 | G | Output | Airborne | air |
| Phenanthrene | 2.02E-07 | G | Output | Airborne | air |
| Phenol | 7.11E-07 | G | Output | Airborne | air |
| PM-10 | 7.77E-02 | G | Output | Airborne | air |
| Propionaldehyde | 1.69E-05 | G | Output | Airborne | air |
| Pyrene | 4.90E-08 | G | Output | Airborne | air |
| Selenium | 6.25E-05 | G | Output | Airborne | air |
| Styrene | 1.11E-06 | G | Output | Airborne | air |
| Sulfur dioxide | 3.35E+00 | G | Output | Airborne | air |
| Tetrachloroethylene | 1.91E-06 | G | Output | Airborne | air |
| TOCs, remaining unspeciated | 7.66E-03 | G | Output | Airborne | air |
| Toluene | 5.56E-05 | G | Output | Airborne | air |
| Vanadium | 2.22E-04 | G | Output | Airborne | air |
| Vinyl acetate | 3.37E-07 | G | Output | Airborne | air |
| Xylene (mixed isomers) | 1.64E-06 | G | Output | Airborne | air |
| Zinc (elemental) | 2.00E-04 | G | Output | Airborne | air |
| **WATER RELEASES** | | | | | |
| Sulfate ion (-4) | 3.39E-02 | G | Output | Waterborne | surface water |
| Suspended solids | 8.82E-04 | G | Output | Waterborne | surface water |
| **WASTE** | | | | | |
| Coal waste | 2.52E+01 | G | Output | Solid waste | landfill |
| Dust/sludge | 9.73E+00 | G | Output | Solid waste | landfill |
| Fly/bottom ash | 6.30E+00 | G | Output | Solid waste | landfill |

**Table 3b. Japanese Electricity Generation Inventory [inputs and outputs per kWh (3.6 MJ)]**

| Material | Quantity | Units | Input/output | Input/output type | Disposition |
|---|---|---|---|---|---|
| Low-level radioactive waste | 4.29E-03 | G | Output | Radioactive waste | landfill |
| Uranium, depleted | 1.29E-03 | G | Output | Radioactive waste | landfill |
| **RADIOACTIVE AIR EMISSIONS** | | | | | |
| Argon-41 (isotope) | 3.89E+01 | Bq | Output | Radioactivity | air |
| Bromine-89 (isotope) | 4.50E-06 | Bq | Output | Radioactivity | air |
| Bromine-90 (isotope) | 1.83E-06 | Bq | Output | Radioactivity | air |
| Cesium-134 (isotope) | 1.24E-04 | Bq | Output | Radioactivity | air |
| Cesium-137 (isotope) | 9.33E-04 | Bq | Output | Radioactivity | air |
| Chromium-51 (isotope) | 2.44E-03 | Bq | Output | Radioactivity | air |
| Cobalt-57 (isotope) | 6.57E-06 | Bq | Output | Radioactivity | air |
| Cobalt-58 (isotope) | 8.38E-05 | Bq | Output | Radioactivity | air |
| Cobalt-60 (isotope) | 6.31E-04 | Bq | Output | Radioactivity | air |
| Iodine-131 (isotope) | 2.95E-03 | Bq | Output | Radioactivity | air |
| Iodine-132 (isotope) | 5.99E-04 | Bq | Output | Radioactivity | air |
| Iodine-133 (isotope) | 2.73E+00 | Bq | Output | Radioactivity | air |
| Iodine-134 (isotope) | 3.10E-03 | Bq | Output | Radioactivity | air |
| Iodine-135 (isotope) | 1.56E-04 | Bq | Output | Radioactivity | air |
| Krypton-85 (isotope) | 6.46E+01 | Bq | Output | Radioactivity | air |
| Krypton-85M (isotope) | 3.13E+00 | Bq | Output | Radioactivity | air |
| Krypton-87 (isotope) | 1.17E+00 | Bq | Output | Radioactivity | air |
| Krypton-88 (isotope) | 5.47E+00 | Bq | Output | Radioactivity | air |
| Manganese-54 (isotope) | 3.47E-05 | Bq | Output | Radioactivity | air |
| Niobium-95 (isotope) | 1.38E-06 | Bq | Output | Radioactivity | air |
| Rubidium-88 (isotope) | 1.28E-02 | Bq | Output | Radioactivity | air |
| Silver-110M (isotope) | 4.11E-08 | Bq | Output | Radioactivity | air |
| Technetium-99M (isotope) | 1.85E-07 | Bq | Output | Radioactivity | air |
| Tritium-3 (isotope) | 9.13E+01 | Bq | Output | Radioactivity | air |
| Xenon-131M (isotope) | 5.27E+00 | Bq | Output | Radioactivity | air |
| Xenon-133 (isotope) | 5.05E+01 | Bq | Output | Radioactivity | air |
| Xenon-133 (isotope) | 5.05E+01 | Bq | Output | Radioactivity | air |
| Xenon-133M (isotope) | 7.60E+02 | Bq | Output | Radioactivity | air |
| Xenon-135 (isotope) | 2.87E+01 | Bq | Output | Radioactivity | air |
| Xenon-135M (isotope) | 5.48E-01 | Bq | Output | Radioactivity | air |
| Xenon-138 (isotope) | 1.82E+00 | Bq | Output | Radioactivity | air |
| Zirconium-95 (isotope) | 3.56E-06 | Bq | Output | Radioactivity | air |
| **RADIOACTIVE WATER RELEASES** | | | | | |
| Antimony-124 (isotope) | 1.92E-02 | Bq | Output | Radioactivity | surface water |
| Antimony-125 (isotope) | 7.67E-02 | Bq | Output | Radioactivity | surface water |

**Table 3b. Japanese Electricity Generation Inventory [inputs and outputs per kWh (3.6 MJ)]**

| Material | Quantity | Units | Input/output | Input/output type | Disposition |
|---|---|---|---|---|---|
| Barium-140 (isotope) | 1.43E-03 | Bq | Output | Radioactivity | surface water |
| Cesium-134 (isotope) | 5.15E-02 | Bq | Output | Radioactivity | surface water |
| Cessium-137 (isotope | 7.73E-02 | Bq | Output | Radioactivity | surface water |
| Chromium-51 (isotope) | 9.27E-02 | Bq | Output | Radioactivity | surface water |
| Cobalt-57 (isotope) | 2.24E-03 | Bq | Output | Radioactivity | surface water |
| Cobalt-58 (isotope) | 9.13E-01 | Bq | Output | Radioactivity | surface water |
| Cobalt-80 (isotope) | 2.40E-01 | Bq | Output | Radioactivity | surface water |
| Iodine-131 (isotope) | 4.28E-02 | Bq | Output | Radioactivity | surface water |
| Iodine-132 (isotope) | 1.62E-02 | Bq | Output | Radioactivity | surface water |
| Iodine-133 (isotope) | 1.83E-02 | Bq | Output | Radioactivity | surface water |
| Iodine-135 (isotope) | 1.31E-02 | Bq | Output | Radioactivity | surface water |
| Iron-55 (isotope) | 2.18E-01 | Bq | Output | Radioactivity | surface water |
| Iron-59 (isotope) | 1.12E-02 | Bq | Output | Radioactivity | surface water |
| Krypton-85M (isotope) | 5.77E-02 | Bq | Output | Radioactivity | surface water |
| Lanthanum-140 (isotope) | 1.53E-03 | Bq | Output | Radioactivity | surface water |
| Manganese-54 (isotope) | 6.11E-02 | Bq | Output | Radioactivity | surface water |
| Molybdenum-99 (isotope) | 1.15E+05 | Bq | Output | Radioactivity | surface water |
| Niobium-95 (isotope) | 1.57E-02 | Bq | Output | Radioactivity | surface water |
| Ruthenium-103 (isotope) | 1.92E-03 | Bq | Output | Radioactivity | surface water |
| Silver-110M (isotope) | 2.24E-02 | Bq | Output | Radioactivity | surface water |
| Sodium-24 (isotope) | 3.42E-03 | Bq | Output | Radioactivity | surface water |
| Strontium-89 (isotope) | 3.70E-03 | Bq | Output | Radioactivity | surface water |
| Strontium-90 (isotope) | 8.69E-04 | Bq | Output | Radioactivity | surface water |
| Strontium-95 (isotope) | 9.57E-03 | Bq | Output | Radioactivity | surface water |
| Sulfur-136 (isotope) | 2.06E-03 | Bq | Output | Radioactivity | surface water |
| Technetium-99M (isotope) | 1.34E-03 | Bq | Output | Radioactivity | surface water |
| Tin-113 (isotope) | 2.12E-03 | Bq | Output | Radioactivity | surface water |
| Tritium-3 (isotope) | 6.83E+02 | Bq | Output | Radioactivity | surface water |
| Xenon-131M (isotope) | 7.02E-01 | Bq | Output | Radioactivity | surface water |
| Xenon-133M (isotope) | 8.84E-01 | Bq | Output | Radioactivity | surface water |
| Xenon-135 (isotope) | 8.05E-01 | Bq | Output | Radioactivity | surface water |
| Zinc-85 (isotope) | 1.03E-03 | Bq | Output | Radioactivity | surface water |

## 3. METHODOLOGY

The U.S.-wide inventory was developed by first compiling inventory data for each of the major generation (fuel-specific) categories used to produce electricity in the U.S., and then creating the U.S.-wide inventory from the fuel-specific inventories. The creation of the U.S.-wide data from the fuel-specific inventories required two particular sets of information: 1997 fuel consumption data and 1997 fuel-specific net electricity generation data (see Table 4). In the majority of cases, one or more pieces of information from these two data sets was needed to convert each input or output into the units of grams per kWh (excluding the radionuclides which were converted to Becquerels per kWh).

**Table 4. 1997 U.S. Electricity Utility Summary Statistics**

| Fuel [a] | 1997 Fuel Consumption | Units | 1997 Net Electricity Generation | 1997 Generation % Breakdown |
|---|---|---|---|---|
| Coal | 900,361,000 | short tons/yr | 1,787,806,000,000 | 57.23% |
| Gas | 2,968,453 | million ft3/yr | 283,625,000,000 | 9.07% |
| Petroleum | 5,256,132 | thousand gal/yr | 77,753,000,000 | 2.53% |
| Nuclear | 48,700,000 | lbs $U_3O_8$/yr | 628,644,000,000 | 20.14% |
| Hydro [b] | -- | -- | 337,233,000,000 | 10.79% |
| Renewables [b] | -- | -- | 7,462,000,000 | 0.24% |
| **Total** | | | 3,122,522,000,000 | 100% |

Source: EIA 1999a.

[a] This breakdown exludes nonutility electricity genration (non and Independent Power Producers (NPPs or IPPs), which typically contribute about 11% of the U.S. total (EIA 1999).

[b] Hydro and renewables were exluded from the calculation of inputs and outputs.

Data on the inputs and outputs for electricity generation were obtained from available sources; when multiple sources of the same type of data were found, those data believed to have the highest quality were utilized (Section 5 addresses data quality). Most data obtained were fuel-specific, however some of the data found were already aggregated to the U.S.-wide level, and thus did not need converting from the fuel-specific values. Thus, for some input/output categories, few calculations were necessary; for others, more complex equations were required to calculate the final input or output data.

As stated earlier in this TM, the final electric grid inventory data (in units of grams/net kWh, for example) will be multiplied by energy use values throughout the life cycle (in units of point-of-use kWhs/functional unit). The two kWhs referred to are different, with the difference being net generated kWhs versus point-of-use kWhs. Due to losses that are associated with moving electrical energy from a point of generation to a point of use, known as 'transmission and distribution (TD) losses,' these must be accounted for in the calculations. It was found in the research for this TM that for 1997 the nationwide TD losses were on the order of 8% of net generation (EIA 1999b). Therefore, to make the kWhs equivalent, the net generation was divided by a TD factor of 1.08 to effectively convert the net kWhs to point-of-use kWhs. The net kWhs are divided by the 1.08 TD factor in all the equations shown in this TM.

The following subsections provide the methodology used and basic equations utilized to create the U.S.-wide inventory from the fuel-specific input and output values.

## 3.1 Inputs

### 3.1.1 Primary Materials

Primary materials are typically considered in LCA to be those materials that become part of the final product of the process being modeled. For the process of electricity generation, the fuels used to produce the electrical energy are usually considered to be the only 'primary' materials. Thus, for the U.S. and Japanese electric grid inventory data, the primary materials include coal, gas, petroleum and uranium. The U.S. nationwide total quantities of these fuels consumed by utilities in 1997 was obtained from the Energy Information Administration (EIA 1999a for coal, gas and petroleum; EIA 1998b for uranium). The Japanese data were obtained from the EIA's Country Energy Data Report (EIA 1997). Note that the primary material for nuclear-based electricity generation is referred to as "yellowcake," which is the most common physical state on which uranium consumption is based. Yellowcake is a yellowish-brown powder that is the product of the initial milling process that follows mining. The input data were provided on a nationwide basis, thus the equation needed to calculate each fuel's use rate in grams per kWh is shown below:

$$UR_{fuel\ i} = \frac{Con_{fuel\ i}}{\frac{Gen_{net}}{TD}} \qquad \textit{Eq. 1}$$

where,

| | | |
|---|---|---|
| $UR_{fuel\ i}$ | = | nationwide input use rate per unit of electricity for fuel *i*, where the four fuels are coal, gas, petroleum and uranium (grams/kWh), |
| $Con_{fuel\ i}$ | = | annual consumption rate for fuel *i* (mass or volume/yr; converted to grams using density as necessary, see Attachment E, Table E5), |
| $Gen_{net}$ | = | net annual nationwide electricity generation (kWh/yr), and |
| TD | = | nationwide average transmission and distribution losses factor (percent). |

In calculating the primary material consumption rates for each fuel, material densities and conversion factors for mass, volume and energy were utilized where needed, depending on whether the units of consumption were in mass or volume (see Attachment E, Table E5).

### 3.1.2 Ancillary Materials

Ancillary materials are considered to be those materials that help the process function or work, yet do not become part of the final product. In generating electricity, all materials used, except the fuel itself, are typically considered to be ancillary materials. The ancillary materials accounted for in the U.S. electric grid inventory data are limestone and lime which are sulfur

dioxide removal system catalysts typically used in coal firing, and cooling water which is consumed in generating electricity from all fuel types.

The limestone and lime values were derived by utilizing data from approximately five different sources, primarily the EIA, the Acid Rain database and direct contact with utility employees. In short, individual lime and limestone annual consumption rates were developed in units of pounds per year for each plant in the U.S. that utilizes a lime- or limestone-based flue gas desulfurization (FGD) system, and then those values were added to obtain the total poundage or tonnage consumed annually in the U.S. (tons per year). At that point, Equation 1 could be used (calculating only for coal) to obtain the quantity of lime or limestone consumed in grams per kWh generated. Cooling water consumption in units of gallons per kWh was obtained from the California Energy Commission (CEC 1979; cited in Paul Gipe's *Wind Energy Comes of Age*, John Wiley & Sons, 1995). Since cooling water is consumed during electricity generation for each of the fuel types followed in this inventory data set, one equation was used to calculate the nationwide average cooling water requirements:

$$UR_{water} = \frac{\sum_{i=1}^{4} \left( Con_{water} \times Gen \right)_{fuel\ i}}{\frac{Gen_{net}}{TD}} \qquad \textit{Eq. 2}$$

where,

| | | |
|---|---|---|
| $Ur_{water}$ | = | nationwide input use rate per unit of electricity for water (grams/kWh), |
| $Con_{water}$ | = | average consumption rate per unit of electricity for water for fuel *i*, where the four fuels are coal, gas, petroleum and uranium (gallons/kWh; converted to grams using density, see Attachment E, Table E5), |
| Gen | = | net annual electricity generation rate for fuel *i* (kWh/yr), |
| $Gen_{net}$ | = | net annual nationwide electricity generation (kWh/yr), and |
| TD | = | nationwide average transmission and distribution losses factor (percent). |

## 3.2 Outputs

### 3.2.1 Air Emissions

Several sources of air emissions data where evaluated in compiling the electric grid inventory data. The evaluation revealed that AP-42 (EPA 1996) data are the most complete source of speciated air emissions data *that are easily accessible and do not require a substantial investment to obtain.* Thus, AP-42 data were used as the foundation for the air emissions estimates. ('AP-42' is the EPA's emission factors data set that addresses the type and quantity of air pollutants that result from over 200 major industries, point sources and mobile sources.)

The evaluation also revealed a few sources of higher quality data for some pollutants, and in those cases, that information was used to either augment or replace the AP-42 factors. Specifically, the air pollutant release rates for criteria pollutants were obtained from the EPA (1998b) on a nationwide annual basis and used instead of the AP-42 factors for those pollutants (the values covered all fossil fuel-based generation categories and were in units of pounds per year). The criteria pollutants include carbon dioxide ($CO_2$), sulfur dioxide ($SO_2$), nitrogen oxides

($NO_X$), carbon monoxide (CO), lead (Pb) and particulate matter ten micrometers or less in diameter (PM-10), and the following equation was used to obtain the emission rates for these pollutants in units of grams/kWh:

$$RR_{air-criteria\ i} = \frac{Rel_{air-criteria\ i}}{\frac{Gen_{net}}{TD}} \qquad \textit{Eq. 3}$$

where,

| | | |
|---|---|---|
| $RR_{air\text{-}criteria\ i}$ | = | nationwide release rate per unit of electricity for criteria pollutant *i* (grams/kWh), |
| $Rel_{air\text{-}criteria\ i}$ | = | annual release rate for criteria pollutant *i* (lbs/yr), |
| $Gen_{net}$ | = | net annual nationwide electricity generation (kWh/yr), and |
| TD | = | nationwide average transmission and distribution losses factor (percent). |

Nuclear power plants produce electricity without combusting fuel, thus no criteria pollutants are emitted to the local air environment during nuclear power production. However, nuclear-based electricity generation does produce some airborne radionuclides, which are addressed in Section 3.2.4. No airborne releases from nuclear-based generation are addressed here.

The air pollutants accounted for in this inventory calculated from AP-42 air emission factors are shown in Table 5. Of these air emission factors, Table 5 shows the number of pollutants in each category, what fuels AP-42 has release data for, and whether the AP-42 data reflects controlled or uncontrolled release of those pollutants.

The equation used to calculate the nationwide emissions of these non-criteria pollutants is Equation 4. The equation shows a summation of three release and consumption rates, which was adjusted for the number of fuels from which the pollutants were listed in AP-42 (shown in Table 5).

For all of the pollutants in Table 5, AP-42 lists only one emission factor per pollutant per fuel (for example, pounds of benzene released per ton of coal burned). Thus, each factor represents a combined emissions estimate for the various technologies used to fire each fuel.

In augmenting the AP-42 data, it was also determined that the nationwide methane ($CH_4$) air releases generated during coal mining (EPA 1998c) are significant, and were added to the emissions estimates of $CH_4$ from coal and petroleum combustion. These emissions were presented in units of nationwide cubic feet of methane released per year.

**Table 5. Air Pollutant Information from AP-42**

| Pollutant Category/Pollutant | # of factors provided | Fuels from Which Pollutants Were Listed in AP-42 | | | Controlled/ Uncontrolled |
|---|---|---|---|---|---|
| | | Coal | Gas | Petroleum | |
| Speciated organic compounds | 37 | ✔ | ✔ | ✔ | Controlled |
| Trace metals | 13 | ✔ | ✔ | ✔ | Controlled |
| Polycryclic aromatic hydrocarbons | 16 | ✔ | | | Controlled |
| Dioxins & furans | 16 | ✔ | | | Controlled |
| Methane | 1 | ✔ | | ✔ | Uncontrolled |
| Nitrous oxide | 1 | ✔ | ✔ | ✔ | Uncontrolled |
| Hydrogen chloride | 1 | ✔ | | | Uncontrolled |
| Hydrogen fluoride | 1 | ✔ | | | Uncontrolled |
| Total organic compounds | 1 | ✔ | ✔ | ✔ | Uncontrolled |
| Total nonmethane organic compounds | 1 | ✔ | | ✔ | Uncontrolled |

Source: EPA 1996.

$$RR_{air-other\ j} = \frac{\sum_{i=1}^{3}\left(Rel_{air-other\ j} \times Con\right)_{fuel\ i}}{\frac{Gen_{net}}{TD}} \qquad Eq.\ 4$$

where,

$Rr_{air\text{-}other\,j}$ = nationwide release rate for each pollutant *j* (grams/kWh),

$Rel_{air\text{-}other\,j}$ = release rate per unit of fuel for each air pollutant *j* from fossil fuel *i* (coal - lbs/ton, gas - lbs/million cubic feet, petroleum - lbs/thousand gallons),

Con = annual consumption rate of fuel *i* (coal - tons/yr, gas - million cubic feet/yr, petroleum - thousand gallons/yr),

$Gen_{net}$ = net annual nationwide electricity generation (kWh/yr), and

TD = nationwide average transmission and distribution losses factor (percent).

### 3.2.2 Solid Wastes

For the U.S. electric grid inventory data, two types of solid waste exist: coal-fired generation nonhazardous solid wastes and nuclear-based generation radioactive solid wastes. [The term 'solid waste' as it is used in this report applies to the Resource Conservation and Recovery Act (RCRA) definition which is defined in the U.S. Federal Code of Regulations (40 CFR 261).] For coal-fired generation, the solid wastes values were obtained from a 1994 Oak Ridge National Laboratory (ORNL) report entitled "Estimating Externalities of Coal Fuel Cycles," and were provided in units of tons of waste produced per gigawatthour (GWh) generated. The calculation needed to obtain the nationwide releases is as follows:

$$RR_{solid\ i} = \frac{Rel_{solid\ i} \times Gen_{coal}}{\frac{Gen_{net}}{TD}} \qquad \textit{Eq. 5}$$

where,

| | | |
|---|---|---|
| $RR_{solid\ i}$ | = | nationwide release rate per unit of electricity for solid waste *i* from coal-fired generation (grams/kWh), |
| $Rel_{solid\ i}$ | = | release rate per unit of electricity for solid waste *i* from coal-fired generation (tons/GWh), |
| $Gen_{coal}$ | = | net annual electricity generation rate for coal (MWh/yr), |
| $Gen_{net}$ | = | net annual nationwide electricity generation (kWh/yr), and |
| TD | = | nationwide average transmission and distribution losses factor (percent). |

For the two nuclear-based generation wastes quantified, spent fuel and low-level radioactive waste (LLRW), two data sources were utilized. The spent fuel data information was obtained from the EIA in units of pounds per year and the LLRW data from an expert in the nuclear electricity generation industry (Loiselle 1998) in units of cubic feet per year (see Attachment E, Table E5 for LLRW conversion factor). The calculation used to derive the quantity of both nuclear wastes generated in units of grams per kWh was similar to Equations 1 and 3, and is shown below:

$$GR_{nuclear\ i} = \frac{Gen_{nuclear\ i}}{\frac{Gen_{net}}{TD}} \qquad \textit{Eq. 6}$$

where,

| | | |
|---|---|---|
| $GR_{nuclear\ i}$ | = | nationwide generation rate per unit of electricity for nuclear waste *i* (grams/kWh), |
| $Gen_{nuclear\ i}$ | = | nationwide annual generation rate for nuclear waste *i* (spent fuel - lbs/yr, LLRW - $ft^3$/yr; converted to grams using density as necessary, see Attachment E, Table E5), |
| $Gen_{net}$ | = | net annual nationwide electricity generation (kWh/yr), and |
| TD | = | nationwide average transmission and distribution losses factor (percent). |

### 3.2.3 Water Releases

Water release information was obtained on coal-fired generation. Radioactive water release information is presented in Section 3.2.4. Information on only three water pollutants was obtained (ORNL 1994). Data were in units of tons/GWh, and thus used an equation like Equation 5 to calculate the nationwide release per unit of electricity generated:

$$RR_{water\ i} = \frac{Rel_{water\ i} \times Gen_{coal}}{\frac{Gen_{net}}{TD}} \qquad \textit{Eq. 7}$$

where,

| | | |
|---|---|---|
| $RR_{water\ i}$ | = | nationwide release rate per unit of electricity for water pollutant *i* from coal-fired generation (grams/kWh), |
| $Rel_{water\ i}$ | = | release rate per unit of electricity for water pollutant *i* from coal-fired generation (tons/GWh), |
| $Gen_{coal}$ | = | net annual electricity generation rate for coal (MWh/yr), |
| $Gen_{net}$ | = | net annual nationwide electricity generation (kWh/yr), and |
| TD | = | nationwide average transmission and distribution losses factor (percent). |

### 3.2.4 Radionuclides

During the operation of nuclear electricity generation facilities, both airborne and waterborne radioactive releases are generated that are not directly related to a facility's capacity to generate power (kWs) or to the quantity of power it generates over time (kWhs). Data were obtained on the radioactive releases of many nuclear facilities in the U.S. from an ORNL report which addressed the externalities of nuclear fuel cycles (ORNL 1995). This report presented averaged release rate information for 31 airborne and 35 waterborne radioactive releases, which were from direct measurements at many U.S.-based nuclear facilities, all of which were presented in units of Curies per year. Although the releases where found *not* to relate directly to power generation or power generating capacity, some scale was needed to convert the quantity of release from multiple facilities to a quantity of release for all the facilities in use in the U.S. Therefore, due to a lack of any other identifiable scaling mechanism, the quantity of power generated was utilized. The Curies per year value for each radioactive release was first converted into Curies per MWh by dividing by the number of MWhs generated by the average facility identified in the report. Then the values were converted into units of Becquerels per kWh. The following equation was utilized for converting airborne and waterborne radionuclides to the nationwide grid:

$$RR_{radionuclide\ i} = \frac{Rel_{radionuclide\ i} \times Gen_{nuclear}}{\frac{Gen_{net}}{TD}} \qquad \textit{Eq. 8}$$

where,

| | | |
|---|---|---|
| $RR_{radionuclide\ i}$ | = | nationwide release rate per unit of electricity for radionuclide *i* (Becquerels/kWh), |
| $Rel_{radionuclide\ i}$ | = | averaged release rate per unit of electricity for radionuclide *i* (Curies/MWh), |
| $Gen_{nuclear}$ | = | annual electricity generation rate for nuclear (MWh/yr), |
| $Gen_{net}$ | = | net annual nationwide electricity generation (kWh/yr), and |
| TD | = | nationwide average transmission and distribution losses factor (percent). |

## 4. FUEL-SPECIFIC RESULTS

Tables 6 through 9 present the inputs and outputs from each of the individual fuel inventories. The data in those tables were aggregated into the U.S.-wide average data for electricity generation (Table 3a) and Japanese average data (Table 3b). Additionally, the spreadsheets from which Tables 6 through 9 were derived are shown in Attachments A through E and provide some additional information about each inventory.

**Table 6. Inputs and Outputs for Coal-Fired Electricity Generation in the United States[a]**

| Material/pollutant | Quantity | Unit |
|---|---|---|
| **INPUTS** | | |
| **Primary Materials** | | |
| Coal | 9.00E+08 | tons/yr |
| | | |
| **Ancillary Materials** | | |
| Limestone | 1.21E+07 | tons/yr |
| Lime | 5.31E+06 | tons/yr |
| Cooling water | 4.90E-01 | gal/kWh |
| | | |
| **OUTPUTS** | | |
| **Air Emissions** | | |
| Methane | 4.00E-02 | lbs/ton |
| Nitrous oxide | 3.00E-02 | lbs/ton |
| Hydrogen chloride | 1.20E+00 | lbs/ton |
| Hydrogen fluoride | 1.50E-01 | lbs/ton |
| TOC | 3.00E-01 | lbs/ton |
| TNMOC | 6.00E-02 | lbs/ton |
| *SPECIATED ORGANIC COMPOUNDS* | | |
| Acetaldehyde | 5.70E-04 | lbs/ton |
| Acetophenone | 1.50E-05 | lbs/ton |
| Acrolein | 2.90E-04 | lbs/ton |
| Benzene | 1.30E-03 | lbs/ton |
| Benzyl chloride | 7.00E-04 | lbs/ton |
| Bis(2-ethylhexyl)phthalate (DEHP) | 7.30E-05 | lbs/ton |
| Bromoform | 3.90E-05 | lbs/ton |
| Carbon disulfide | 1.30E-04 | lbs/ton |
| 2-Chloroacetophenone | 7.00E-06 | lbs/ton |
| Chlorobenzene | 2.20E-05 | lbs/ton |
| Chloroform | 5.90E-05 | lbs/ton |
| Cumene | 5.30E-06 | lbs/ton |
| Cyanide | 2.50E-03 | lbs/ton |
| 2,4-Dinitrotoluene | 2.80E-07 | lbs/ton |
| Dimethyl sulfate | 4.80E-05 | lbs/ton |

| Material/pollutant | Quantity | Unit |
|---|---|---|
| **OUTPUTS** (continued) | | |
| **Air Emissions** (continued) | | |
| *TRACE METALS* (continued) | | |
| Beryllium | 2.10E-05 | lbs/ton |
| Cadmium | 5.10E-05 | lbs/ton |
| Chromium | 2.60E-04 | lbs/ton |
| Chromium (VI) | 7.90E-05 | lbs/ton |
| Cobalt | 1.00E-04 | lbs/ton |
| Magnesium | 1.10E-02 | lbs/ton |
| Manganese | 4.90E-04 | lbs/ton |
| Mercury | 8.30E-05 | lbs/ton |
| Nickel | 2.80E-04 | lbs/ton |
| Selenium | 1.30E-03 | lbs/ton |
| *POLYCYCLIC AROMATIC HYDROCARBONS (PAHs)* | | |
| Biphenyl | 1.70E-06 | lbs/ton |
| Acenaphthene | 5.10E-07 | lbs/ton |
| Acenaphthylene | 2.50E-07 | lbs/ton |
| Anthracene | 2.10E-07 | lbs/ton |
| Benzo(a)anthracene | 8.00E-08 | lbs/ton |
| Benzo(a)pyrene | 3.80E-08 | lbs/ton |
| Benzo(b,j,k)fluoranthene | 1.10E-07 | lbs/ton |
| Benzo(g,h,i)perylene | 2.70E-08 | lbs/ton |
| Chrysene | 1.00E-07 | lbs/ton |
| Fluoranthene | 7.10E-07 | lbs/ton |
| Fluorene | 9.10E-07 | lbs/ton |
| Indeno(1,2,3-cd)pyrene | 6.10E-08 | lbs/ton |
| Naphthalene | 1.30E-05 | lbs/ton |
| Phenanthrene | 2.70E-06 | lbs/ton |
| Pyrene | 3.30E-07 | lbs/ton |
| 5-Methyl chrysene | 2.20E-08 | lbs/ton |
| *DIOXINS & FURANS* | | |
| 2,3,7,8-TCDD | 1.43E-11 | lbs/ton |
| Total TCDD | 9.28E-11 | lbs/ton |

**Table 6. Inputs and Outputs for Coal-Fired Electricity Generation in the United States[a]**

| Material/pollutant | Quantity | Unit | Material/pollutant | Quantity | Unit |
|---|---|---|---|---|---|
| Ethyl benzene | 9.40E-05 | lbs/ton | Total PeCDD | 4.47E-11 | lbs/ton |
| Ethyl chloride | 4.20E-05 | lbs/ton | Total HxCDD | 2.87E-11 | lbs/ton |
| Ethylene dichloride | 4.00E-05 | lbs/ton | Total HpCDD | 8.34E-11 | lbs/ton |
| Ethylene dibromide | 1.20E-06 | lbs/ton | Total OCDD | 4.16E-10 | lbs/ton |
| Formaldehyde | 2.40E-04 | lbs/ton | Total PCDDd | 6.66E-10 | lbs/ton |
| Hexane | 6.70E-05 | lbs/ton | 2,3,7,8-TCDF | 5.10E-11 | lbs/ton |
| Isophorone | 5.80E-04 | lbs/ton | Total TCDF | 4.04E-10 | lbs/ton |
| Methyl bromide | 1.60E-04 | lbs/ton | Total PeCDF | 3.53E-10 | lbs/ton |
| Methyl chloride | 5.30E-04 | lbs/ton | Total HxCDF | 1.92E-10 | lbs/ton |
| Methyl ethyl ketone | 3.90E-04 | lbs/ton | Total HpCDF | 7.68E-11 | lbs/ton |
| Methyl hydrazine | 1.70E-04 | lbs/ton | Total OCDF | 6.63E-11 | lbs/ton |
| Methyl methacrylate | 2.00E-05 | lbs/ton | Total PCDFd | 1.09E-09 | lbs/ton |
| Methyl tert butyl ether | 3.50E-05 | lbs/ton | *COAL MINE METHANE EMISSIONS* | | |
| Methylene chloride | 2.90E-04 | lbs/ton | Methane | 1.52E+11 | $ft^3/yr$ |
| Phenol | 1.60E-05 | lbs/ton | | | |
| Propionaldehyde | 3.80E-04 | lbs/ton | **Solid Wastes** | | |
| Tetrachloroethylene | 4.30E-05 | lbs/ton | Dust/sludge | 5.51E+01 | tons/GWh |
| Toluene | 2.40E-04 | lbs/ton | Coal waste | 1.43E+02 | tons/GWh |
| 1,1,1-Trichloroethane | 2.00E-05 | lbs/ton | Fly/bottom ash | 3.57E+01 | tons/GWh |
| Styrene | 2.50E-05 | lbs/ton | | | |
| Xylenes | 3.70E-05 | lbs/ton | **Water Releases** | | |
| Vinyl acetate | 7.60E-06 | lbs/ton | Dissolver | 2.78E-01 | tons/GWh |
| *TRACE METALS* | | | Suspended solids | 5.00E-03 | tons/GWh |
| Antimony | 1.80E-05 | lbs/ton | Sulfate | 1.92E-01 | tons/GWh |

[a] All inputs and outputs have been left in their original units of measure.

## Table 7. Inputs and Outputs for Gas-Fired Electricity Generation in the United States

| Material/pollutant | Quantity | Unit |
|---|---|---|
| **INPUTS** | | |
| **Primary Material** | | |
| Gas | 3.00E+12 | yr 3/yr |
| | | |
| **Ancillary Material** | | |
| Water | 2.50E-01 | gal/kWh |
| | | |
| **OUTPUTS** | | |
| **Air Emissions** | | |
| Nitrous oxide | 2.20E+00 | lbs/Mft3 |
| Filterable PM | 1.50E+00 | lbs/Mft3 |
| Condensible PM | 1.50E+00 | lbs/Mft3 |
| TOC | 1.70E+00 | lbs/Mft3 |
| *SPECIATED ORGANIC COMPOUNDS* | | |
| Fluoranthene | 3.01E-06 | lbs/Mft3 |
| Formaldehyde | 1.55E-01 | lbs/Mft3 |
| 2-Methylnaphthalene | 9.02E-06 | lbs/Mft3 |

| Pollutant | Quantity | Unit |
|---|---|---|
| **OUTPUTS** (continued) | | |
| **Air Emissions** (continued) | | |
| *SPECIATED ORGANIC COMPOUNDS (continued)* | | |
| Naphthalene | 2.40E-04 | lbs/Mft3 |
| Phenanthrene | 1.00E-05 | lbs/Mft3 |
| Pyrene | 5.01E-06 | lbs/Mft3 |
| Toluene | 2.20E-03 | lbs/Mft3 |
| *TRACE METALS* | | |
| Arsenic | 2.30E-04 | lbs/Mft3 |
| Barium | 2.40E-03 | lbs/Mft3 |
| Chromium | 1.10E-03 | lbs/Mft3 |
| Cobalt | 1.20E-04 | lbs/Mft3 |
| Copper | 2.51E-04 | lbs/Mft3 |
| Manganese | 3.81E-04 | lbs/Mft3 |
| Molybdenum | 5.81E-04 | lbs/Mft3 |
| Nickel | 3.61E-03 | lbs/Mft3 |
| Vanadium | 3.21E-03 | lbs/Mft3 |

[a] All inputs and outputs have been left in their original units of measure.

## Table 8. Inputs and Outputs for Petroleum-Fired Electricity Generation in the U.S.

| Material/Pollutant | Quantity | Unit |
|---|---|---|
| **INPUTS** | | |
| **Primary Material** | | |
| Petroleum | | |
| | | |
| **Ancillary Material** | | |
| Water | 4.30E-01 | gal/kWh |
| | | |
| **OUTPUTS** | | |
| **Air Emissions** | | |
| Methane | 2.66E-01 | lbs/kgal |
| Nitrous oxide | 1.10E-01 | lbs/kgal |
| TOC | 9.93E-01 | lbs/kgal |
| TNMOC | 7.26E-01 | lbs/kgal |
| *SPECIATED ORGANIC COMPOUNDS* | | |
| Acenaphthene | 2.11E-05 | lbs/kgal |
| Acenaphthylene | 2.53E-07 | lbs/kgal |
| Anthracene | 1.22E-06 | lbs/kgal |
| Benzene | 2.14E-04 | lbs/kgal |
| Benz(a)anthracene | 4.01E-06 | lbs/kgal |
| Benzo(b,k)fluoranthene | 1.48E-06 | lbs/kgal |
| Benzo(g,h,i)perylene | 2.26E-06 | lbs/kgal |

| Pollutant | Quantity | Unit |
|---|---|---|
| **OUTPUTS** (continued) | | |
| **Air Emissions** (continued | | |
| *SPECIATED ORGANIC COMPOUNDS* (continued) | | |
| OCDD | 3.10E-09 | lbs/kgal |
| Phenanthrene | 1.05E-05 | lbs/kgal |
| Pyrene | 4.25E-06 | lbs/kgal |
| Toluene | 6.20E-03 | lbs/kgal |
| 1,1,1-Trichloroethane | 2.36E-04 | lbs/kgal |
| o-xylene | 1.09E-04 | lbs/kgal |
| *TRACE METALS* | | |
| Antimony | 5.25E-03 | lbs/kgal |
| Arsenic | 1.28E-03 | lbs/kgal |
| Barium | 2.57E-03 | lbs/kgal |
| Beryllium | 4.71E-05 | lbs/kgal |
| Cadmium | 4.67E-04 | lbs/kgal |
| Chloride | 3.47E-01 | lbs/kgal |
| Chromium | 1.28E-03 | lbs/kgal |
| Chromium (VI) | 2.48E-04 | lbs/kgal |
| Cobalt | 6.02E-03 | lbs/kgal |
| Copper | 1.76E-03 | lbs/kgal |
| Fluoride | 3.73E-02 | lbs/kgal |

## Table 8. Inputs and Outputs for Petroleum-Fired Electricity Generation in the U.S.

| Material/Pollutant | Quantity | Unit | Pollutant | Quantity | Unit |
|---|---|---|---|---|---|
| Chrysene | 2.38E-06 | lbs/kgal | Manganese | 2.94E-03 | lbs/kgal |
| Dibenzo(a,h)anthracene | 1.67E-06 | lbs/kgal | Mercury | 1.31E-04 | lbs/kgal |
| Ethylbenzene | 6.36E-05 | lbs/kgal | Molybdenum | 7.87E-04 | lbs/kgal |
| Fluoranthene | 4.84E-06 | lbs/kgal | Nickel | 8.09E-02 | lbs/kgal |
| Fluorene | 4.47E-06 | lbs/kgal | Phosphorous | 9.46E-03 | lbs/kgal |
| Formaldehyde | 3.30E-02 | lbs/kgal | Selenium | 6.83E-04 | lbs/kgal |
| Indo(1,2,3-cd)pyrene | 2.14E-06 | lbs/kgal | Vanadium | 3.18E-02 | lbs/kgal |
| Naphthalene | 1.13E-03 | lbs/kgal | Zinc | 2.91E-02 | lbs/kgal |

[a] All inputs and outputs have been left in their original units of measure.

## Table 9. Inputs and Outputs for Nuclear-Based Electricity Generation in the U.S.

| Material/pollutant | Quantity | Unit |
|---|---|---|
| **INPUTS** | | |
| **Primary Material** | | |
| Uranium oxide ("yellowcake") | 4.87E+07 | lbs/yr |
| | | |
| **Ancillary Material** | | |
| Water | 6.20E-01 | gal/kWh |
| | | |
| **OUTPUTS** | | |
| **Solid Wastes** | | |
| Spent fuel | 5.29E+06 | lbs/yr |
| LLRW | 2.21E+05 | $ft^3$/yr |
| | | |
| **Airborne Radionuclide Emissions** | | |
| T-3 | 7.33E-06 | Curies/MWh |
| Ar-41 | 3.13E-06 | Curies/MWh |
| Cr-51 | 1.96E-10 | Curies/MWh |
| Mn-54 | 2.78E-12 | Curies/MWh |
| Co-57 | 5.27E-13 | Curies/MWh |
| Co-58 | 6.73E-12 | Curies/MWh |
| Co-60 | 5.06E-11 | Curies/MWh |
| Kr-85 | 5.18E-06 | Curies/MWh |
| Kr-85M | 2.51E-07 | Curies/MWh |
| Kr-87 | 9.35E-08 | Curies/MWh |
| Rb-88 | 1.03E-09 | Curies/MWh |
| Kr-88 | 4.39E-07 | Curies/MWh |
| Br-89 | 3.62E-13 | Curies/MWh |
| Br-90 | 1.47E-13 | Curies/MWh |
| Nb-95 | 1.11E-13 | Curies/MWh |
| Zr-95 | 2.86E-13 | Curies/MWh |
| Tc-99M | 1.48E-14 | Curies/MWh |

| Pollutant | Quantity | Unit |
|---|---|---|
| **OUTPUTS** (continued) | | |
| **Waterborne Radionuclide Emissions** (continued) | | |
| Xe-135M | 4.40E-08 | Curies/MWh |
| Cs-137 | 7.49E-11 | Curies/MWh |
| Xe-138 | 1.46E-07 | Curies/MWh |
| **Waterborne Radionuclide Emissions** | | |
| T-3 | 5.48E-05 | Curies/MWh |
| Na-24 | 2.75E-10 | Curies/MWh |
| Cr-51 | 7.44E-09 | Curies/MWh |
| Mn-54 | 4.90E-09 | Curies/MWh |
| Fe-55 | 1.75E-08 | Curies/MWh |
| Co-57 | 1.80E-10 | Curies/MWh |
| Co-58 | 7.33E-08 | Curies/MWh |
| Fe-59 | 9.00E-10 | Curies/MWh |
| Co-80 | 1.92E-08 | Curies/MWh |
| Zn-85 | 8.27E-11 | Curies/MWh |
| Kr-85M | 4.63E-09 | Curies/MWh |
| Sr-89 | 2.97E-10 | Curies/MWh |
| Sr-90 | 6.97E-11 | Curies/MWh |
| Nb-95 | 1.26E-09 | Curies/MWh |
| Sr-95 | 7.68E-10 | Curies/MWh |
| Mo-99 | 9.25E-03 | Curies/MWh |
| Tc-99M | 1.08E-10 | Curies/MWh |
| Ru-103 | 1.54E-10 | Curies/MWh |
| Ag-110M | 1.80E-09 | Curies/MWh |
| Sn-113 | 1.70E-10 | Curies/MWh |
| Sb-124 | 1.54E-09 | Curies/MWh |
| Sb-125 | 6.15E-09 | Curies/MWh |
| I-131 | 3.43E-09 | Curies/MWh |
| Xe-131M | 5.64E-08 | Curies/MWh |

**Table 9. Inputs and Outputs for Nuclear-Based Electricity Generation in the U.S.**

| Material/pollutant | Quantity | Unit | Pollutant | Quantity | Unit |
|---|---|---|---|---|---|
| Ag-110M | 3.30E-15 | Curies/MWh | I-132 | 1.30E-09 | Curies/MWh |
| I-131 | 2.37E-10 | Curies/MWh | Xe-133 | 8.66E-06 | Curies/MWh |
| Xe-131M | 4.23E-07 | Curies/MWh | I-133 | 1.47E-09 | Curies/MWh |
| I-132 | 4.80E-11 | Curies/MWh | Xe-133M | 7.10E-08 | Curies/MWh |
| Xe-133 | 6.10E-05 | Curies/MWh | Cs-134 | 4.13E-09 | Curies/MWh |
| I-133 | 2.19E-07 | Curies/MWh | I-135 | 1.06E-09 | Curies/MWh |
| Xe-133M | 4.06E-06 | Curies/MWh | Xe-135 | 6.46E-08 | Curies/MWh |
| Cs-134 | 9.93E-12 | Curies/MWh | s-136 | 1.65E-10 | Curies/MWh |
| I-134 | 2.49E-10 | Curies/MWh | Cs-137 | 6.20E-09 | Curies/MWh |
| Xe-135 | 2.30E-06 | Curies/MWh | Ba-140 | 1.14E-10 | Curies/MWh |
| I-135 | 1.25E-11 | Curies/MWh | La-140 | 1.23E-10 | Curies/MWh |

[a] All inputs and outputs have been left in their original units of measure.

Table 10 presents the number of inventory data points for each fuel type by input or output category. As can easily be seen, most of the fuel-specific inventories are dominated by air pollution data. Of the main categories of air pollutants considered, the following breakdown lists those emissions that are the biggest contributors (have the largest emission rates in overall quantity) to each part of each fuel inventory:

- Coal – Cyanide (speciated organic compounds), magnesium (metal), naphthalene [polycyclic aromatic hydrocarbons (PAH)] and the total octochlorodibenzo-p-dioxins (dioxins and furans)
- Gas – Formaldehyde (speciated organic compound), nickel (metal)
- Petroleum – Formaldehyde (speciated organic compound), chloride (metal)
- Nuclear – Xenon-133 (airborne radionuclide), molybdenum-99 (waterborne radionuclide)

Note that in Tables 6 through 9, the units for the inputs and outputs were left as originally found in their source. All fuel-specific inputs and outputs (excluding radioactive releases) were converted to the units desired for the U.S.-wide electric grid of grams/kWh during aggregation into that inventory data set.

**Table 10. Number of Inputs & Outputs Within Each Inventory**

| Inputs & Outputs | Coal | Gas | Petroleum | Nuclear |
|---|---|---|---|---|
| Primary materials | 1 | 1 | 1 | 1 |
| Ancillary materials | 3 | 1 | 1 | 1 |
| Air releases | 89 | 29 | 51 | 31 |
| Water releases | 3 | -- | -- | 35 |
| Solid & hazardous wastes | 3 | -- | -- | 2 |
| Total | 99 | 31 | 53 | 70 |

# 5. DATA SOURCES & QUALITY

Source and quality information for the data presented in this TM are detailed in Table 11. In general, data assigned higher quality ratings were directly measured and represent 1997 data. As data required more calculation or estimation, or were from a previous year, data quality was reduced. Additional comments about data source and quality are in the following subsections.

## 5.1 Nonfuel specific data

The criteria pollutant air emission values used in this inventory all came from the *National Air Quality & Emissions Trends Report, 1997*. While this report does state that the values supplied are "estimates of the amount and kinds of pollutants being emitted ... based upon best available engineering calculations," (EPA 1998b) the EPA used measured air emission rates where feasible, and thus these data were given 'Average' data quality ratings.

## 5.2 Coal

As the leading electricity-producing fuel in the U.S., coal has accounted for between 40% and 60% of the kWh produced by utilities in the national grid since the 1930s (NEI 1997). In 1997, coal-fired generation accounted for just over 57% of all utility-generated electricity.

Of the coal inventory data, the coal quantity used annually and the methane generated from coal mining were both directly measured data for 1997 and thus were given 'Excellent' data quality ratings. The data for speciated air emissions that came from AP-42 were deemed 'Poor,' due primarily to the following two facets of the data. First, in averaging the data quality ratings that the EPA applies to their AP-42 factors, an average rating of approximately 3 is calculated, indicating by their own standards an 'average' rating. (EPA's data quality ratings are A, B, C, D and E, where, for example, A, C and E represent 'Excellent,' 'Average' and 'Poor' respectively. This alphabetically based system was temporarily converted into a numerical system of 1 through 5 where 1 corresponds to A and 5 corresponds to E to calculate the required averages.) Second, the bulk of the AP-42 data was dated January 1995; updates were included several times since then (two in 1996 and one in 1998), however, each update included only small changes to the whole AP-42 emission factor data set.

The cooling water use (for all fuels) and the solid waste and water release data for coal were assigned a data quality rating of 'Unknown' due to a lack of information on the original data source.

## Table 11. Data Sources and Quality Information for the U.S. Electric Grid Inventories

| I/O Type [a] | Data | Data Source/ Reference | Data Source Comments | Data Quality [b] | Data Quality Explanation |
|---|---|---|---|---|---|
| **NONFUEL SPECIFIC** | | | | | |
| AR | Criteria pollutants | EPA 1998b | Although the EPA uses measured data wherever feasible in calculating the emissions included in this report, much data required estimating to effectively model the national totals for certain pollutant categories. | Average | Although the bulk of the data used in this analysis were measured, some estimates were required to obtain emissions information from particular industries before aggregating to obtain the U.S.-wide totals. |
| **COAL** | | | | | |
| PM | Coal | EIA 1998c | Measured; required for regulatory recording purposes. | Excellent | Measurements provide the highest quality data. |
| AM | Limestone and lime | EIA 1997 | The primary data used in calculating the limestone and lime usage were measured, however approximately six sources of information were accessed to obtain the necessary information to derive final factors. | Average | Of the sources referenced for this calculation, three utilized measured data, while the remaining utilized average or poor quality data. Thus, the overall rating is 'Average.' |
| AM | Cooling water | CEC 1979 | Only source located in which cooling water requirements were detailed for the main electricity generation categories. | Unknown | CEC did not list its data sources. |
| SW & WR | All | ORNL 1994 | Original source of data in the ORNL 1994 report was Meridian Corporation 1989, however, could not be located. | Unknown | Original data document could not be found. |
| AR | All noncriteria pollutants | EPA 1996 | AP-42 factors have a self-assigned 'Average' to 'Poor' quality rating. | Poor | Given 'Poor' rating for several reasons, including primarily that 1) overall AP-42 self-assigned ratings are 'Average' and 2) data applies to 1995. |
| AR | Methane from coal mining | EPA 1998c | Measured; reported for regulatory recording purposes. | Excellent | Measurements provide the highest quality data. |
| **GAS & PETROLEUM** | | | | | |
| PM | Gas and petroleum | EIA 1998c | Measured; required for regulatory recording purposes. | Excellent | Measurements provide the highest quality data. |
| AM | Cooling water | CEC 1979 | Only source located in which cooling water requirements were detailed for the main electricity generation categories. | Unknown | CEC did not list its data sources. |
| AR | All noncriteria pollutants | EPA 1996 | AP-42 factors have a self-assigned 'Poor' quality rating for gas and 'Average' to 'Poor' quality rating for petroleum. | Poor | Given 'Poor' rating for several reasons, including primarily that 1) overall AP-42 self-assigned ratings are 'Average' and 2) data applies to 1995. |
| **URANIUM** | | | | | |
| PM | Uranium | EIA 1998b | Measured data, yet had to scale using an unproven scaling mechanism. | Average | Measurements provide the highest quality data, yet the scaling mechanism utilized introduces potential error. |
| AM | Cooling water | CEC 1979 | Only source located in which cooling water requirements were detailed for the main electricity generation categories. | Unknown | CEC did not list its data sources. |
| SW | Spent fuel | EIA 1996 | Estimates the quantity of spent fuel that will be generated in the US in 1997, using measured historical records and knowledge of what facilities will be changing operating patterns in future years (from 1996 perspective). | Excellent | Although not directly measured, use of recently measured data along with in-depth knowledge of future industry changes to project value earns an 'Excellent' rating. |
| SW | LLRW | Loiselle 1998 | Estimated by an industry expert. | Average | Lack of any measured data gives way to an 'Average' rating. |
| RR | Airborne radionuclides | ORNL 1995 | Averaged measured data from nuclear generation facilities. | Excellent | Measurements provide the highest quality data. |
| RR | Waterborne radionuclides | ORNL 1995 | Averaged measured data from nuclear generation facilities. | Excellent | Measurements provide the highest quality data. |

[a] Input/Output (I/O) types: PM = primary material, AM = ancillary material, SW = solid waste, AR = airborne release, WR = water release, RR = radioactive release.

[b] The data quality ratings given were assigned to one of the following four data quality categories: Excellent, Average, Poor and Unknown.

### 5.3 Gas & Petroleum

Each of these data sets utilize the EIA's *Electric Power Annual* for the primary fuel consumption estimates and AP-42 data for the air emissions. The EIA data were given 'Excellent' data quality marks as these data are reported as direct measurements and applicable to 1997. The air emissions were given a quality rating of 'Poor' for the same two reasons the coal inventory data AP-42 estimates were given that rating.

### 5.4 Uranium

For the nuclear-related inputs and outputs, the largest category of input or output type information was radionuclide emissions. The radionuclide emission information contained in the report was obtained by averaging radionuclide emissions data from 36 different pressurized water reactors (PWRs) across the U.S. (out of just over 110 nuclear reactors total in the U.S.). As discussed previously, the emissions were not found to directly correlate to electricity generation (kWh) or generating capacity (kW), but "were more likely affected by random events within the reactor, such as fuel pin cladding failures, leaks in the primary coolant loop and steam-generator tube leaks" (ORNL 1995). Thus, all factors considered, the overall data quality rating for these emissions was deemed 'Average.' The mass of uranium consumed annually was given the 'Excellent' rating as this information is measured through reporting supplied to the EIA and applicable to 1997.

Of the remaining inputs and outputs, most received higher quality ratings except for the cooling water values which received the 'Unknown' rating due to a lack of information on the original data source.

## 6. DATA LIMITATIONS

Several limitations of the U.S. electrical energy grid inventory data relate to the exclusion of either entire generation categories (e.g., hydro) or life-cycle substages (see Table 2). For example, no data are readily available for the life-cycle substages of ore and fuel transportation and preliminary ore or fuel processing. Examples of ore and fuel transportation and processing burdens for which insufficient data are available include the emissions generated during the processing of crude oil to produce fuel oils Nos. 6 and 2, and the energy use and wastes generated during the processing of uranium ore into fuel pellets.

With regard to the exclusion of entire generation categories, the renewable and hydroelectric generating categories have not been included in this U.S.-wide inventory. Renewables accounted for only about 0.24% of the total electricity generated in the U.S. in 1997, and are expected to have greatly reduced impacts when compared to the other fuel types. Hydropower was omitted, as stated previously, due to the scarcity of data on hydroelectric inputs and outputs, and also that the CDP LCIA methodology does not account directly for the effects of habitat destruction (expected to be one of the largest impacts from hydroelectric generation once quantified).

Other limitations of the data are related to the use of AP-42 emissions factors, primarily due to the fact that EPA's own ratings of their factors are, at best, 'Average' (see discussion in Section 5.2). Other data limitations include the small number of sources from which much of the

data have been obtained. Not necessarily as much a limitation of the data as a limitation in the sources of the data, this is still an area for quality improvement. Also, as noted previously, nonutility electricity generation in the U.S. is excluded from this inventory, and accounts for about 11% of the total electricity generated annually.

There are some implications that can be derived from the limitations mentioned here on the U.S.-wide electric grid inventory data. These implications include the following:

- Since there are currently no other sources of detailed air emission information like AP-42, there is no way of knowing just how accurate their estimates are (possibly predicting a bias in one direction or the other). It appears that the reason that the EPA's quality ratings of their AP-42 data tend toward 'Average' is that in quite a few cases, emissions test were run on only a small number of boilers. Without a larger body of data on which to base the emission factors, it is not known how the use of these factors biases the results.
- The exclusion of the inputs and outputs from materials extraction, the initial and secondary materials processing stages, and the associated transportation for several fuel types (see Table 2) will underestimate the total inventory from electricity generation. Especially when considering the massive amount of processing that is required to develop the uranium fuel pellets that are used in nuclear generation, this may be the largest influence of all the biases for this inventory. (It should also be noted that these processing steps for developing uranium pellets are extremely energy intensive, thus decreasing the efficiency of not only the nuclear electricity generation process, but also the whole grid's overall efficiency as well.)
- The exclusion of the hydropower and renewable generation types should have little effect on the U.S.-wide electric grid inventory data because the renewables are a minimal percentage of the total generation, and hydropower involves no combustion and thus would have minimal impacts.
- The exclusion of the nonutility-type generation brings two major issues forward. First, nonutilities use cogeneration the majority of the time to produce electricity (EIA 1997). Cogeneration utilizes two cycles to produce electrical energy and another form of usable energy (typically steam) thereby increasing the overall efficiency of the energy conversion process. Second, renewables (including hydropower) and gas make up 76% of the energy generation type for nonutilities, two of the lesser polluting types of electricity generation. These two factors should combine to, for the average kWh, decrease not only the quantity of raw materials needed as inputs but also the amount of air emissions generated as outputs for the inventory.

Finally, the Japanese inventory is limited by having been derived from the U.S. fuel-specific inventories and may not accurately represent electricity production operations in Japan.

Overall, with some implications inferring an underestimate in the inventory and some inferring an overestimate, it is uncertain which way the inventory may be biased. To a certain extent, the lessened impacts from the exclusion of nonutility electricity production data seem to offset the exclusion of the processing and transportation life-cycles substages data. However, the

exclusion of this relevant data hampers the effort to build a completely accurate and representative electric grid inventory.

## 7. CONCLUSIONS

The U.S. electric grid inventory data presented in this TM will be used to determine the environmental burdens that result from energy consumption in the U.S. using the CDP LCIA methodology. To summarize the work done in this analysis and its use within the CDP, the following is presented:

- The fuel-specific inventories for each of the four primary generation categories used in the average electric grid were compiled from a variety of sources, and then the fuel-specific inventories were combined using a generation-based weighted average to develop the U.S.-wide and Japanese electrical energy grid inventories of material inputs and pollutant outputs in units of grams of input or output per kWh consumed (except for radioactive materials which were placed in units of Becquerels/kWh).
- The U.S.-wide electrical energy grid inventory data are used in the CDP to calculate material inputs and pollutant outputs from electricity consumed during some manufacturing, use, and final disposal of computer displays.
- The Japanese electrical energy grid inventory data are used in the CDP to calculate material inputs and pollutant outputs from electricity consumed during the manufacturing of monitors in Asia.
- The electrical energy grid data are not used for upstream life-cycle stages (i.e., extraction of materials, materials processing) as these are being obtained from secondary sources which already have included the inputs and outputs from energy consumption.

Once the data have been gathered for all of the CDP processes of interest and the inputs and outputs for each of these processes have been analyzed from a life-cycle perspective, the results will help identify how important the impacts of energy consumption are throughout a monitor's life-cycle.

## ACRONYMS/ABBREVIATIONS

| | |
|---|---|
| CCPCT | Center for Clean Products and Clean Technologies |
| CEC | California Energy Commission |
| $CH_4$ | Methane |
| CO | Carbon monoxide |
| $CO_2$ | Carbon dioxide |
| DOE | Department of Energy |
| EIA | Energy Information Administration |
| EPA | Environmental Protection Agency |
| FGD | Flue Gas Desulfurization |
| GWh | Gigawatthour |
| HCl | Hydrogen chloride |
| HF | Hydrogen fluoride |
| kWh | kilowatthour |
| LCA | Life-cycle assessment |
| LCI | Life-cycle inventory |
| LLRW | Low-level radioactive waste |
| MW | Megawatt |
| Mwh | Megawatthour |
| $N_2O$ | Nitrous oxide |
| $NO_X$ | Oxides of nitrogen |
| ORNL | Oak Ridge National Laboratory |
| PAH | Polycyclic aromatic hydrocarbons |
| Pb | Lead |
| PM-10 | Particulate matter 10 microns or less in diameter |
| PWR | Pressurized Water Reactor |
| $SO_2$ | Sulfur dioxide |
| TNMOC | Total nonmethane organic carbon |
| TOC | Total organic carbon |
| TRI | Toxic Release Inventory |
| $U_3O_8$ | Uranium oxide |
| UT | University of Tennessee |

## REFERENCES

CEC (California Energy Commission). 1979. *Technical Assessment Manual, Vol. 1, Electricity Generation.* p. A-4.

CFR (Code of Federal Regulations). 1995. Title 40: Protection of Environment, Part 261, Section 2 - Definition of Solid Waste. June.

EIA (Energy Information Administration). 1996. *Nuclear Power Generation and Fuel Cycle Report 1996, Volume II*, DOE/EIA-0436(96). October.

EIA. 1997. *Electric Power Annual 1996, Volume II*, DOE/EIA-0348(96)/2. November.

EIA. 1997. *Country Energy Data Report for 1997.* Web site available at http://www.eia.doe.gov.

EIA. 1998a. *Electric Power Annual 1997, Volume II*, DOE/EIA-0348(97)/2. October.

EIA. 1998b. *Uranium Industry Annual 1997*, DOE/EIA-0478(97). April.

EIA. 1998c. *Electric Power Annual 1997, Volume I*, DOE/EIA-0348(97)/1. June.

EIA. 1999a. *Electric Power Monthly, February 1999 (With Data for November 1998)*, DOE/EIA-0226(99/02).

EIA. 1999b. *Short Term Energy Outlook, September 1999 (an EIA document published online)*, Web site available at http://www.eia.doe.gov/pubs/forecasting/steo/sep99/a8tab.pdf. September.

EPA (Environmental Protection Agency). 1996. *Compilation of Air Pollutant Emission Factors (AP-42), Fifth Edition, Volume I.* AP-42. January.

EPA. 1998a. *Inventory of Greenhouse Gas Emissions and Sinks, 1990 – 1996*, EPA/236-R-98-006, March. {Annex Q}

EPA. 1998b. *National Air Quality & Emissions Trends Report, 1997*, EPA/454/R-98-016. December.

EPA. 1998c. From the Excel spreadsheet "Coal_Inv_Sheet" of the Coalbed Methane Outreach Program, as provided by the Program's primary contact Karl Schultz.

Loiselle, V. 1998. Personal communication with V. Loiselle, Past Chairman of the Association of Radioactive Metal Recyclers, and J. Overly, University of Tennessee, Center for Clean Products and Clean Technologies. May.

NEI (Nuclear Energy Institute). 1997. *Nuclear Energy's Clean Air Benefits: A Legacy of Greenhouse Gas Reductions and Fossil Fuel Conservation in America.* Washington, D.C. October.

ORNL (Oak Ridge National Laboratory). 1994. *Report 3: Estimating Externalities of Coal Fuel Cycles.* Oak Ridge, TN. September.

ORNL. 1995. *Report 8: Estimating Externalities of Nuclear Fuel Cycles.* Oak Ridge, TN. April.

# ATTACHMENT A. COAL INFORMATION WORKSPACE

## Table A1. Mining Related Outputs - Methane Air Emissions

| Pollutant | Quantity [a] | Units | Converted Quantity [b] | Units |
|---|---|---|---|---|
| **Outputs** | | | | |
| Methane | 169,906 | million ft 3/yr | 1.52E+05 | million ft 3/yr |

[a] Value pertains to methane emissions related to all coal mined nation-wide in U.S. (EPA 1998a).
[b] This value represents methane emissions from coal mined exclusively for electricity generation. It is calculated based on the knowledge that 89.6% of the coal mined in the U.S. in 1997 was for electricity generation, thus the toal methane emissions are multiplied by 89.6% to obtain the emissions from electricity generation alone.
(EIA web page: http://www.eia.doe.gov/cneaf/coal/cia/summary/cia_sum.html, 1997).

## Table A2. Generation Related Inputs and Outputs - Excluding Air Emissions

| Material/Pollutant | Quantity | Units | Converted Quantity | Units |
|---|---|---|---|---|
| **Inputs** | | | | |
| **Ancillary Materials** | | | | |
| Water [a] | 0.49 | gallons/kWh | --- | --- |
| Limestone [b] | 12,091,817 | tons/yr | --- | --- |
| Lime [b] | 5,310,548 | tons/yr | --- | --- |
| **Outputs** | | | | |
| **SOLID WASTES [c]** | | | | |
| Dust/sludge | 55.143 | tons/GWh | 1.10E+02 | lbs/MWh |
| Coal waste | 142.857 | tons/GWh | 2.86E+02 | lbs/MWh |
| Fly/bottom ash | 35.714 | tons/GWh | 7.14E+01 | lbs/MWh |
| **WASTEWATER EMISSIONS [c]** | | | | |
| Dissolver | 0.278 | tons/GWh | 5.56E-01 | lbs/MWh |
| Suspended solids | 0.005 | tons/GWh | 1.00E-02 | lbs/MWh |
| Sulfate | 0.192 | tons/GWh | 3.84E-01 | lbs/MWh |

[a] CEC (1979).
[b] Primary data used to calculate these values from EIA (1997); however, data were modified to derive nationwide average.
[c] ORNL (1994).

## Table A3. Generation Related Outputs - Air Emissions [a]

| Pollutant | Quantity (lbs/ton of coal) | EPA's Factor Raging [b] |
|---|---|---|
| **Outputs** | | |
| **Miscellaneous Compounds [c]** | | |
| Methane | 0.04 | B |
| Nitrous oxide | 0.03 | B |
| Hydrogen chloride | 1.2 | B |
| Hydrogen fluoride | 0.15 | B |
| Total organic compounds | 0.3 | E |
| Total nonmethane organic compounds | 0.06 | B |
| **Speciated Organic Compounds [d], [e]** | | |
| Acetaldehyde | 5.70E-04 | C |
| Acetophenone | 1.50E-05 | D |
| Acrolein | 2.90E-04 | D |
| Benzene | 1.30E-03 | A |
| Benzyl chloride | 7.00E-04 | D |
| Bis(2-ethyhexyl)pththalate (DEHP) | 7.30E-05 | D |
| Bromoform | 3.90E-05 | E |
| Carbon disulfide | 1.30E-04 | D |
| 2-Chloroacetophenone | 7.00E-06 | E |
| Chlorobenzene | 2.20E-05 | D |
| Chloroform | 5.90E-05 | E |
| Cumene | 5.30E-06 | E |
| Cyanide | 2.50E-03 | D |
| 2,4-Dinitrotoluene | 2.80E-07 | D |
| Dimethyl sulfate | 4.80E-05 | E |
| Ethyl benzene | 9.40E-05 | D |
| Ethyl chloride | 4.20E-05 | D |
| Ethylene dichloride | 4.00E-05 | E |
| Ethylene dibromide | 1.20E-06 | E |
| Formaldehyde | 2.40E-04 | A |
| Hexane | 6.70E-05 | D |
| Isophorone | 5.80E-04 | D |
| Methyl bromide | 1.60E-04 | D |
| Methyl chloride | 5.30E-04 | D |
| Methyl ethyl ketone | 3.90E-04 | D |
| Methyl hydrazine | 1.70E-04 | E |
| Methyl methacrylate | 2.00E-05 | E |
| Methyl tert butyl ether | 3.50E-05 | E |
| Methylene chloride | 2.90E-04 | D |

## Table A3. Generation Related Outputs - Air Emissions [a]

| Pollutant | Quantity (lbs/ton of coal) | EPA's Factor Raging [b] |
|---|---|---|
| Phenol | 1.60E-05 | D |
| Propionaldehyde | 3.80E-04 | D |
| Tetrachloroethylene | 4.30E-05 | D |
| Toluene | 2.40E-04 | A |
| 1,1,1-Trichloroethane | 2.00E-05 | E |
| Styrene | 2.50E-05 | D |
| Xylenes | 3.70E-05 | C |
| Vinyl acetate | 7.60E-06 | E |
| **Trace Metals** [d], [e] | | |
| Antimony | 1.80E-05 | A |
| Arsenic | 4.10E-04 | A |
| Beryllium | 2.10E-05 | A |
| Cadmium | 5.10E-05 | A |
| Chromium | 2.60E-04 | A |
| Chromium (VI) | 7.90E-05 | D |
| Cobalt | 1.00E-04 | A |
| Magnesium | 1.10E-02 | A |
| Manganese | 4.90E-04 | A |
| Mercury | 8.30E-05 | A |
| Nickel | 2.80E-04 | A |
| Selenium | 1.30E-03 | A |
| **Polycyclic Aromatic Hydrocarbons** [d], [e] | | |
| Biphenyl | 1.70E-06 | D |
| Acenaphthene | 5.10E-07 | B |
| Acenaphthylene | 2.50E-07 | B |
| Anthracene | 2.10E-07 | B |
| Benmzo(a)anthracne | 8.00E-08 | B |
| Benzo(a)pyrene | 3.80E-08 | D |
| Benzo(b,j,k)fluoranthene | 1.10E-07 | D |
| Benzo(g,h,i)perylene | 2.70E-08 | D |
| Chrysene | 1.00E-07 | C |
| Fluoranthene | 7.10E-07 | B |
| Fluorene | 9.10E-07 | B |
| Indeno(1,2,3-cd)pyrene | 6.10E-08 | C |
| Naphthalene | 1.30E-05 | C |
| Phenanthrene | 2.70E-06 | B |
| Pyrene | 3.30E-07 | B |
| 5-Methyl chrysens | 2.20E-08 | D |

## Table A3. Generation Related Outputs - Air Emissions [a]

| Pollutant | Quantity (lbs/ton of coal) | EPA's Factor Raging [b] |
|---|---|---|
| **Dioxins & Furans** [d], [f] | | |
| 2,3,7,8-TCDD | 1.43E-11 | E |
| Total TCDD | 9.28E-11 | D |
| Total PeCDD | 4.47E-11 | D |
| Total HxCDD | 2.87E-11 | D |
| Total HpCDD | 8.34E-11 | D |
| Total OCDD | 4.16E-10 | D |
| Total PCDDd | 6.66E-10 | D |
| 2,3,7,8-TCDF | 5.10E-11 | D |
| Total TCDF | 4.04E-10 | D |
| Total PeCDF | 3.53E-10 | D |
| Total HxCDF | 1.92E-10 | D |
| Total HpCDF | 7.68E-11 | D |
| Total OCDF | 6.63E-11 | D |
| Total PCDFd | 1.09E-09 | D |
| TOTAL PCDD/PCDF | 1.76E-09 | D |

[a] All the air emissions presented here are from EPA's AP-42 factors (EPA 1996).
[b] "EPA's AP-42 emissions factor rating is an overall assessment of how good a factor is, based on both the quality of the test(s) or information that is the source of the factor and on how well the factor represents the emission source." (EPA 1996) EPA's factor ratings are as follows:
A = Excellent; B = Above Average; C = Average; D = Below Average; and E = Poor.
[c] Due to a lack of data on firing configurations for all U.S. boilers, the pulverized coal (PC), dry, wall-fired boiler firing configuration (the most common configuration in the U.S.) was chosen as the representative configuration. Additionally, the factors for methane, nitrous oxide,, total organic compounds and total nonmethane organic compounds are for uncontrolled emissions, while the values for hydrogen chloride and hydrogen fluoride are for controlled and uncontrolled emissions (measurements were taken from different facilities were some had control equipment and others did not).
[d] These are all controlled factors.
[e] Apply to bituminous, subbituminous and ignite coal types. Even though these factors apply only to these three coal types, the emission factors are applied to all coal types. This was done for two reasons: 1) because no factors were given for the remaining coal types; and 2) those remaining coal types do generate some of these emissions, and it would have been erroneous to consider then 'pollutant-free."
[f] Apply to bituminous and subbituminous coal types. Even though these factors apply only to these two coal types, the emission factors are applied to all coal types. This was done for two reasons: 1) because no factors were given for the remaining coal types; and 2) those remaining coal types do generate some of these emissions, and it would have been erroneous to consider them 'pollutant-free.'

# ATTACHMENT B. GAS INFORMATION WORKSPACE

## Table B1. Generation Related Inputs

| Material | Quantity | Units |
|---|---|---|
| **Inputs** | | |
| **Ancillary Materials** | | |
| Water [a] | 0.25 | gallons/kWh |

[a] CEC (1979). The value listed under 'Combined Cycle' in the reference was used for gas-fired generation since the majority of combined cycle units's top cycle is fired by gas.

## Table B2. Generation Related Outputs

| Pollutant | Quantity (lbs/million ft3 of gas) | EPA's factor rating [b] |
|---|---|---|
| **Outputs** | | |
| **AIR EMISSIONS** [a] | | |
| **Miscellaneous Compounds** [c] | | |
| Nitrous oxide | 2.2 | C |
| Total organic compounds | 1.7 | C |
| **Speciated Organic Compounds** [d] | | |
| Fluoranthene | 3.10E-06 | E |
| Formaldehyde | 1.55E-01 | C |
| 2-Methylnaphthalene | 9.02E-06 | E |
| Naphthalene | 2.40E-04 | E |
| Phenanthrene | 1.00E-05 | E |
| Pyrene | 5.10E-06 | E |
| Toluene | 2.20E-03 | E |
| **Trace Metals** [e] | | |
| Arsenic | 2.30E-04 | E |
| Barium | 2.40E-03 | E |
| Chromium | 1.10E-03 | E |
| Cobalt | 1.20E-04 | E |
| Copper | 2.51E-04 | E |
| Manganese | 3.81E-04 | E |
| Molybdenum | 5.81E-04 | E |
| Nickel | 3.61E-03 | E |
| Vanadium | 3.21E-03 | E |

[a] All outputs for gas-fired generation are air emissions and are from the EPA's AP-42 emission factors (EPA 1996).
[b] "EPA's AP-42 emissions factor rating is an overall assessment of how good a factor is; based on both the quality of the test(s) or information that is the source of the factor and how well the factor represents the emission source (EPA 1996). EPA's factor ratings are as follows: A = Excellent; B = Above Average; C = Average; D = Below Average; and E = Poor.
[c] Factors are for uncontrolled combustion.
[d] Each of the seven factors provided are for controlled and uncontrolled combustion.
[e] Factors are for controlled combustion.

# ATTACHMENT C. PETROLEUM INFORMATION WORKSPACE

## Table C1. Generation Related Inputs

| Material | Quantity | Units |
|---|---|---|
| **Inputs** | | |
| **ANCILLARY MATERIALS** | | |
| Water [a] | 0.43 | gallons/kWh |

[a] CEC (1979).

## Table C2. Generation Related Outputs

| Pollutant | Quantity (lbs/thousand gallons of oil) | EPA's factor rating [b] | Quantity (lbs/thousand gallons of oil) | EPA's factor rating [b] | Quantity (lbs/thousand gallons of oil) | EPA's factor rating [b] |
|---|---|---|---|---|---|---|
| | Fuel Oil #6 | | Fuel Oil #2 | | Average Factors | |
| **Outputs** | | | | | | |
| **AIR EMISSIONS** [a] | | | | | | |
| **Miscellaneous Compounds** [c] | | | | | | |
| Methane | 0.28 | A | 0.052 | A | 2.66E-01 | A |
| Nitrous oxide | 0.11 | B | 0.11 | B | 1.10E-01 | B |
| Total organic compounds | 1.04 | A | 0.252 | A | 9.93E-01 | A |
| Total nonmethane organic compounds | 0.76 | A | 0.2 | A | 7.26E-01 | A |
| **Speciated Organic Compounds** [d] | | | | | | |
| Acenaphthene | 2.11E-05 | C | | | 2.11E-05 | C |
| Acenaphthylene | 2.53E-07 | D | | | 2.53E-07 | D |
| Anthracene | 1.22E-06 | C | | | 1.22E-06 | C |
| Benzene | 2.14E-04 | C | | | 2.14E-04 | C |
| Benz(a)anthracene | 4.01E-06 | C | | | 4.01E-06 | C |
| Benzo(b,k)fluoranthene | 1.48E-06 | C | | | 1.48E-06 | C |
| Benzo(g,h,i)perylene | 2.26E-06 | C | | | 2.26E-06 | C |
| Chrysene | 2.38E-06 | C | | | 2.38E-06 | C |
| Dibenzo(a,h)anthracene | 1.67E-06 | D | | | 1.67E-06 | D |
| Ethylbenzene | 6.36E-05 | E | | | 6.36E-05 | E |
| Fluoranthene | 4.84E-06 | C | | | 4.84E-06 | C |
| Fluorene | 4.47E-06 | C | | | 4.47E-06 | C |
| Formaldehyde | 3.30E-02 | C | | | 3.30E-02 | C |
| Indo(1,2,3-cd)pyrene | 2.14E-06 | C | | | 2.14E-06 | C |
| Naphthalene | 1.13E-03 | C | | | 1.13E-03 | C |
| OCDD | 3.10E-09 | E | | | 3.10E-09 | E |
| Phenanthrene | 1.05E-05 | C | | | 1.05E-05 | C |
| Pyrene | 4.25E-06 | C | | | 4.25E-06 | C |
| Toluene | 6.20E-03 | D | | | 6.20E-03 | D |

## Table C2. Generation Related Outputs

| Pollutant | Quantity (lbs/thousand gallons of oil) | EPA's factor rating [b] | Quantity (lbs/thousand gallons of oil) | EPA's factor rating [b] | Quantity (lbs/thousand gallons of oil) | EPA's factor rating [b] |
|---|---|---|---|---|---|---|
| | Fuel Oil #6 | | Fuel Oil #2 | | Average Factors | |
| 1,1,1-Trichloroethane | 2.36E-04 | E | | | 2.36E-04 | E |
| o-xylene | 1.09E-04 | E | | | 1.09E-04 | E |
| **Trace Metals** [e] | | | | | | |
| Antimony | 5.25E-03 | E | | | 5.25E-03 | E |
| Arsenic | 1.32E-03 | C | 5.88E-04 | E | 1.28E-03 | C |
| Barium | 2.57E-03 | D | | | 2.57E-03 | D |
| Beryllium | 2.78E-05 | C | 3.50E-04 | E | 4.71E-05 | C |
| Cadmium | 3.98E-04 | C | 1.54E-03 | E | 4.67E-04 | C |
| Chloride | 3.47E-01 | D | | | 3.47E-01 | D |
| Chromium | 8.45E-04 | C | 8.05E-03 | E | 1.28E-03 | C |
| Chromium (VI) | 2.48E-04 | C | | | 2.48E-04 | C |
| Cobalt | 6.02E-03 | D | | | 6.02E-03 | D |
| Copper | 1.76E-03 | C | | | 1.76E-03 | C |
| Fluoride | 3.73E-02 | D | | | 3.73E-02 | D |
| Manganese | 3.00E-03 | C | 1.96E-03 | E | 2.94E-03 | C |
| Mercury | 1.13E-04 | C | 4.20E-04 | E | 1.31E-04 | C |
| Molybdenum | 7.87E-04 | D | | | 7.87E-04 | D |
| Nickel | 8.45E-02 | C | 2.38E-02 | E | 8.09E-02 | C |
| Phosphorous | 9.46E-03 | D | | | 9.46E-03 | D |
| Selenium | 6.83E-04 | C | | | 6.83E-04 | C |
| Vanadium | 3.18E-02 | D | | | 3.18E-02 | D |
| Zinc | 2.91E-02 | D | | | 2.91E-02 | D |

[a] All outputs for oil-fired generation are air emissions and are from the EPA's AP-42 emission factors (EPA 1996).

[b] "EPA's AP-42 emissions factor rating is an overall assessment of how good a factor is, based on both the quality of the test(s) or information that is the source of the factor and on how well the factor represents the emission source" (EPA 1996). EPA's factor ratings are as follows: A = Excellent; B = Above Average; C = Average; D = Below Average; and E = Poor.

[c] Factors are for uncontrolled combustion of all pollutants, except for N2O. No information was provided as to the control of N2O emissions.

[d] No information was provided as to the control of these pollutants. No emission factors were presented for fuel oil #2, thus, the factors for #6 were considered the same for #2. Even though one could assume that fuel oil #2 should have smaller quantities of pollutants to contribute per equivalent volume than fuel oil #6 (due to #6 being a residual oil and # 2 being a distillate), some of the results from the trace metals table contradict that assumption, thus substantiating this action.

[e] No information was provided as to the control of these pollutants. Where no fuel oil #2 emission factor was given, the factor for fuel oil #6 was used for both fuel oils. Even though one could assume that fuel oil #2 should have smaller quantities of pollutants to contribute per equivalent volume than fuel oil #6, some of the results from this table (where factors were reported for both fuel oils) contradict that assumption, thus substantiating this action.

## Table C3. Miscellaneous Calculation Information

| | Quantity | Unit | Quantity | Unit |
|---|---|---|---|---|
| | Fuel Oil #6 | | Fuel Oil #2 | |
| Type of petroleum used at utilities [a] | 94 | % | 6 | % |
| AP-42 heat values for fuel oils [f] | 152,000 | btu/gal | 140,000 | but/gal |

[a] Source: EIA's "Cost & Quality of Fuels for Electric Utility Plants 1997."
[b] EPA (1996).

# ATTACHMENT D. NUCLEAR INFORMATION WORKSPACE

## Table D1. Generation Related Inputs and Outputs - Excluding Radionuclide Emissions

| Material/Pollutant | Quantity | Units | Converted Quantity | Units |
|---|---|---|---|---|
| **Inputs** | | | | |
| **PRIMARY MATERIALS** | | | | |
| Uranium oxide [a] | 48,700,000 | lbs/yr | --- | --- |
| **ANCILLARY MATERIALS** | | | | |
| Water [b] | 0.62 | gallons/kWh | --- | --- |
| **Outputs** | | | | |
| SOLID/HAZARDOUS WASTES | | | | |
| Uranium (spent fuel generated) [c] | 2,400 | metric tons/yr | 5.29E+06 | lbs/yr |
| Low-level radioactive waste [d] | 220,500 | cubic feet/yr | --- | --- |

[a] Known as 'yellowcake,' this post-milling uranium product is sent to conversion facilities (EIA 1998b).
[b] CEC (1979).
[c] EIA (1996); Table 18.
[d] Loisell (1998).

## Table D2. Generation Related Outputs - Radionuclide Emissions

| **Isotope** | **Quantity** | **Units** | **Converted Quantity** | **Units [d]** |
|---|---|---|---|---|
| **Outputs** [a], [b], [c] | | | | |
| **AIRBORNE RADIONUCLIDE EMISSIONS** | | | | |
| T-3 | 5.98E+01 | Curies/yr | 7.33E-06 | Curies/MWh |
| Ar-41 | 2.55E+01 | Curies/yr | 3.13E-06 | Curies/MWh |
| Cr-51 | 1.60E-03 | Curies/yr | 1.96E-10 | Curies/MWh |
| Mn-54 | 2.27E-05 | Curies/yr | 2.78E-12 | Curies/MWh |
| Co-57 | 4.30E-06 | Curies/yr | 5.27E-13 | Curies/MWh |
| Co-58 | 5.49E-05 | Curies/yr | 6.73E-12 | Curies/MWh |
| Co-60 | 4.13E-04 | Curies/yr | 5.06E-11 | Curies/MWh |
| Kr-85 | 4.23E+01 | Curies/yr | 5.18E-06 | Curies/MWh |
| Kr-85M | 2.05E+00 | Curies/yr | 2.51E-07 | Curies/MWh |
| Kr-87 | 7.63E-01 | Curies/yr | 9.35E-08 | Curies/MWh |
| Rb-88 | 8.38E-03 | Curies/yr | 1.03E-09 | Curies/MWh |
| Kr-88 | 3.58E+00 | Curies/yr | 4.39E-07 | Curies/MWh |
| Br-89 | 2.95E-06 | Curies/yr | 3.62E-13 | Curies/MWh |
| Br-90 | 1.20E-06 | Curies/yr | 1.47E-13 | Curies/MWh |
| Nb-95 | 9.02E-07 | Curies/yr | 1.11E-13 | Curies/MWh |
| Zr-95 | 2.33E-06 | Curies/yr | 2.86E-13 | Curies/MWh |
| Tc-99M | 1.21E-07 | Curies/yr | 1.48E-14 | Curies/MWh |
| Ag-110M | 2.69E-08 | Curies/yr | 3.30E-15 | Curies/MWh |
| I-131 | 1.93E-03 | Curies/yr | 2.37E-10 | Curies/MWh |

**Table D2. Generation Related Outputs - Radionuclide Emissions**

| Isotope | Quantity | Units | Converted Quantity | Units [d] |
|---|---|---|---|---|
| Xe-131M | 3.45E+00 | Curies/yr | 4.23E-07 | Curies/MWh |
| I-132 | 3.92E-04 | Curies/yr | 4.80E-11 | Curies/MWh |
| Xe-133 | 4.98E+02 | Curies/yr | 6.10E-05 | Curies/MWh |
| I-133 | 1.79E+00 | Curies/yr | 2.19E-07 | Curies/MWh |
| Xe-133M | 3.31E+01 | Curies/yr | 4.06E-06 | Curies/MWh |
| Cs-134 | 8.10E-05 | Curies/yr | 9.93E-12 | Curies/MWh |
| I-134 | 2.03E-03 | Curies/yr | 2.49E-10 | Curies/MWh |
| Xe-135 | 1.88E+01 | Curies/yr | 2.30E-06 | Curies/MWh |
| I-135 | 1.02E-04 | Curies/yr | 1.25E-11 | Curies/MWh |
| Xe-135M | 3.59E-01 | Curies/yr | 4.40E-08 | Curies/MWh |
| Cs-137 | 6.11E-04 | Curies/yr | 7.49E-11 | Curies/MWh |
| Xe-138 | 1.19E+00 | Curies/yr | 1.46E-07 | Curies/MWh |
| T-3 | 4.47E+02 | Curies/yr | 5.48E-05 | Curies/MWh |
| Na-24 | 2.24E-03 | Curies/yr | 2.75E-10 | Curies/MWh |
| Cr-51 | 6.07E-02 | Curies/yr | 7.44E-09 | Curies/MWh |
| Mn-54 | 4.00E-02 | Curies/yr | 4.90E-09 | Curies/MWh |
| Fe-55 | 1.43E-01 | Curies/yr | 1.75E-08 | Curies/MWh |
| Co-57 | 1.47E-03 | Curies/yr | 1.80E-10 | Curies/MWh |
| Co-58 | 5.98E-01 | Curies/yr | 7.33E-08 | Curies/MWh |
| Fe-59 | 7.34E-03 | Curies/yr | 9.00E-10 | Curies/MWh |
| Co-80 | 1.57E-01 | Curies/yr | 1.92E-08 | Curies/MWh |
| Zn-85 | 6.75E-04 | Curies/yr | 8.27E-11 | Curies/MWh |
| Kr-85M | 3.78E-02 | Curies/yr | 4.63E-09 | Curies/MWh |
| Sr-89 | 2.42E-03 | Curies/yr | 2.97E-10 | Curies/MWh |
| Sr-90 | 5.69E-04 | Curies/yr | 6.97E-11 | Curies/MWh |
| Nb-95 | 1.03E-02 | Curies/yr | 1.26E-09 | Curies/MWh |
| Sr-95 | 6.27E-03 | Curies/yr | 7.68E-10 | Curies/MWh |
| Mo-99 | 7.55E+04 | Curies/yr | 9.25E-03 | Curies/MWh |
| Tc-99M | 8.78E-04 | Curies/yr | 1.08E-10 | Curies/MWh |
| Ru-103 | 1.26E-03 | Curies/yr | 1.54E-10 | Curies/MWh |
| Ag-110M | 1.47E-02 | Curies/yr | 1.80E-09 | Curies/MWh |
| Sn-113 | 1.39E-03 | Curies/yr | 1.70E-10 | Curies/MWh |
| Sb-124 | 1.26E-02 | Curies/yr | 1.54E-09 | Curies/MWh |
| Sb-125 | 5.02E-02 | Curies/yr | 6.15E-09 | Curies/MWh |
| I-131 | 2.80E-02 | Curies/yr | 3.43E-09 | Curies/MWh |
| Xe-131M | 4.60E-01 | Curies/yr | 5.64E-08 | Curies/MWh |
| I-132 | 1.06E-02 | Curies/yr | 1.30E-09 | Curies/MWh |
| Xe-133 | 7.07E+01 | Curies/yr | 8.66E-06 | Curies/MWh |
| I-133 | 1.20E-02 | Curies/yr | 1.47E-09 | Curies/MWh |

**Table D2. Generation Related Outputs - Radionuclide Emissions**

| Isotope | Quantity | Units | Converted Quantity | Units [d] |
|---|---|---|---|---|
| Xe-133M | 5.79E-01 | Curies/yr | 7.10E-08 | Curies/MWh |
| Cs-134 | 3.37E-02 | Curies/yr | 4.13E-09 | Curies/MWh |
| I-135 | 8.61E-03 | Curies/yr | 1.06E-09 | Curies/MWh |
| Xe-135 | 5.27E-01 | Curies/yr | 6.46E-08 | Curies/MWh |
| s-136 | 1.35E-03 | Curies/yr | 1.65E-10 | Curies/MWh |
| Cs-137 | 5.06E-02 | Curies/yr | 6.20E-09 | Curies/MWh |
| Ba-140 | 9.34E-04 | Curies/yr | 1.14E-10 | Curies/MWh |
| La-140 | 1.00E-03 | Curies/yr | 1.23E-10 | Curies/MWh |

[a] ORNL (1995).

[b] There were 111 operating commercial nuclear power stations in the U.S. in 1995, of which 75 were PWRs (presssurized-water reactors) and 36 were BWRs (boiling-water reactors). Of the PWRs, 52 were designed by Westinghouse; the remaining 23 were designed by either ABB or Babcock & Wilcox. From the available data, the authors chose to use data from all Westinghouse PWRs with greater than 800 MWS capacity (36 facilities) in attempts to gather consistent data for
their calculations on transport and dose-effects for their reference PWR.

[c] "These emissions are characterisitc of normal (nonaccident) emissions, and did not appear to readily correlate to MWhs produced or reactor capacity. Amounts produced are more likely affected by random events within reactor, such as fuel pin cladding failures, leaks in the primary coolant loop, steam-generator tube leaks, etc." (ORNL 1995, pp. 6-35 & 6-36).

[d] The units of Curies/MWh were derived by dividing the Curies/yr values by the number of MWhs produced annually in the virtual facility discussed in the source for this information (8,160,000 MWh/yr).

# ATTACHMENT E. SUMMARY INFORMATION WORKSPACE

Notes:
• In the tables in this Appendix, "US kWh" is utilized to identify values that are representative of an average U.S. kWh in 1997.
• Unless stated otherwise, the sources for the data presented here are detailed in Attachments A through D.

## Table E1. Generation Related Inputs and Outputs - Excluding Air Emissions

| Material/Pollutant | Quantity | Units | Converted Quantity | Units |
|---|---|---|---|---|
| **Inputs** | | | | |
| **PRIMARY MATERIALS** | | | | |
| Coal | 900,361,000 | tons/yr | 2.83E+02 | grams/US kWh |
| Gas | 2,968,453,000,000 | ft3/yr | 2.20E+01 | grams/US kWh |
| Petroleum | 5,256,132,000 | agal/yr | 5.99E+00 | grams/US kWh |
| Uranium (yellow cake) | 48,700,000 | lbs/yr | 7.64E-03 | grams/US kWh |
| **ANCILLARY MATERIALS** | | | | |
| Limestone | 12,091,817 | tons/yr | 3.79E+00 | grams/US kWh |
| Lime | 5,310,548 | tons/yr | 1.67E+00 | grams/US kWh |
| Water | 11,426,836,328,400 | lbs/yr | 1.79E+03 | grams/US kWh |
| **Outputs** | | | | |
| **SOLID WASTES** | | | | |
| Dust/sludge | 197,169,972,516 | lbs/yr | 3.09E+01 | grams/US kWh |
| Coal waste | 510,801,203,484 | lbs/yr | 8.01E+01 | grams/US kWh |
| Fly/bottom ash | 127,699,406,968 | lbs/yr | 2.00E+01 | grams/US kWh |
| Uranium (spent fuel generated) | 1.83E-06 | lbs/kWh | 8.30E-04 | grams/US kWh |
| LLRW | 6.10E-06 | lbs/kWh | 2.77E-03 | grams/US kWh |
| **WATER RELEASES** | | | | |
| Dissolver | 994,020,136 | lbs/yr | 1.56E-01 | grams/US kWh |
| Suspended solids | 17,878,060 | lbs/yr | 2.80E-03 | grams/US kWh |
| Sulfate | 686,517,504 | lbs/yr | 1.08E-01 | grams/US kWh |

## Table E2. Generation Related Outputs - Air Emissions

| Pollutant | Quantity | Units | Converted Quantity | Units |
|---|---|---|---|---|
| **Outputs** | | | | |
| **Criteria Pollutants [a]** | | | | |
| Carbon dioxide | 2,231,433,058 | tons/yr | 6.48E+02 | grams/US kWh |
| Nitrogen oxides | 6,178,000 | tons/yr | 1.79E+00 | grams/US kWh |
| Sulfur dioxide | 13,082,000 | tons/yr | 3.80E+00 | grams/US kWh |
| Carbon monoxide | 406,000 | tons/yr | 1.18E-01 | grams/US kWh |
| Lead | 64 | tons/yr | 1.86E-05 | grams/US kWh |
| Particulate matter (10 microns or less) | 290,000 | tons/yr | 8.43E-02 | grams/US kWh |
| **Uncategorized Pollutants** | | | | |
| Methane (includes coal mining releases) | 6,473,160,931 | lbs/yr | 1.02E+00 | grams/US kWh |
| Nitrous oxide | 34,119,601 | lbs/yr | 5.35E-03 | grams/US kWh |
| Hydrogen chloride | 1,080,433,200 | lbs/yr | 1.70E-01 | grams/US kWh |
| Hydrogen fluoride | 135,054,150 | lbs/yr | 2.12E-02 | grams/US kWh |
| Total organic compounds | 280,372,537 | lbs/yr | 4.40E-02 | grams/US kWh |
| Total nonmethane organic compounds | 57,839,714 | lbs/yr | 9.07E-03 | grams/US kWh |
| **Speciated Organic Compounds** | | | | |
| Acetaldehyde | 513,206 | lbs/yr | 8.05E-05 | grams/US kWh |
| Acetophenone | 13,505 | lbs/yr | 2.12E-06 | grams/US kWh |
| Acrolein | 261,105 | lbs/yr | 4.10E-05 | grams/US kWh |
| Benzene | 1,171,594 | lbs/yr | 1.84E-04 | grams/US kWh |
| Benzo(b,k)fluoranthene | 8 | lbs/yr | 1.22E-09 | grams/US kWh |
| Benzyl chloride | 630,253 | lbs/yr | 9.89E-05 | grams/US kWh |
| Bis(2-ethylhexyl)phthalate (DEHP) | 65,726 | lbs/yr | 1.03E-05 | grams/US kWh |
| Bromoform | 35114.079 | lbs/yr | 5.51E-06 | grams/US kWh |
| 2-Chloroacetophenone | 6302.527 | lbs/yr | 9.89E-07 | grams/US kWh |
| Carbon disulfide | 117046.93 | lbs/yr | 1.84E-05 | grams/US kWh |
| Chlorobenzene | 19807.942 | lbs/yr | 3.11E-06 | grams/US kWh |
| Chloroform | 53121.299 | lbs/yr | 8.33E-06 | grams/US kWh |
| Cumene | 4771.9133 | lbs/yr | 7.49E-07 | grams/US kWh |
| Cyanide | 2250902.5 | lbs/yr | 3.53E-04 | grams/US kWh |
| 2,4-Dinitrotoluene | 252.10108 | lbs/yr | 3.96E-08 | grams/US kWh |
| Dibenzo(a,h)anthracene | 8.77774044 | lbs/yr | 1.38E-09 | grams/US kWh |
| Dimethyl sulfate | 43217.328 | lbs/yr | 6.78E-06 | grams/US kWh |
| Ethyl benzene | 84968.224 | lbs/yr | 1.33E-05 | grams/US kWh |
| Ethyl chloride | 37815.162 | lbs/yr | 5.93E-06 | grams/US kWh |
| Ethylene dichloride | 36014.44 | lbs/yr | 5.65E-06 | grams/US kWh |
| Ethylene dibromide | 1080.4332 | lbs/yr | 1.70E-07 | grams/US kWh |

## Table E2. Generation Related Outputs - Air Emissions

| Pollutant | Quantity | Units | Converted Quantity | Units |
|---|---|---|---|---|
| Formaldehyde | 849649.211 | lbs/yr | 1.33E-04 | grams/US kWh |
| Hexane | 60324.187 | lbs/yr | 9.46E-06 | grams/US kWh |
| Indo(1,2,3-cd)pyrene | 11.24812248 | lbs/yr | 1.76E-09 | grams/US kWh |
| Isophorone | 522209.38 | lbs/yr | 8.19E-05 | grams/US kWh |
| 2-Methylnaphthalene | 26.77544606 | lbs/yr | 4.20E-09 | grams/US kWh |
| Methyl bromide | 144057.76 | lbs/yr | 2.26E-05 | grams/US kWh |
| Methyl chloride | 477191.33 | lbs/yr | 7.49E-05 | grams/US kWh |
| Methyl ethyl ketone | 351140.79 | lbs/yr | 5.51E-05 | grams/US kWh |
| Methyl hydrazine | 153061.37 | lbs/yr | 2.40E-05 | grams/US kWh |
| Methyl methacrylate | 18007.22 | lbs/yr | 2.83E-06 | grams/US kWh |
| Methyl tert butyl ether | 31512.635 | lbs/yr | 4.94E-06 | grams/US kWh |
| Methylene chloride | 261104.69 | lbs/yr | 4.10E-05 | grams/US kWh |
| OCDD | 0.016294009 | lbs/yr | 2.56E-12 | grams/US kWh |
| Phenol | 14405.776 | lbs/yr | 2.26E-06 | grams/US kWh |
| Propionaldehyde | 342137.18 | lbs/yr | 5.37E-05 | grams/US kWh |
| Tetrachloroethylene | 38715.523 | lbs/yr | 6.07E-06 | grams/US kWh |
| Toluene | 255205.255 | lbs/yr | 4.00E-05 | grams/US kWh |
| 1,1,1-Trichloroethane | 19247.66715 | lbs/yr | 3.02E-06 | grams/US kWh |
| Styrene | 22509.025 | lbs/yr | 3.53E-06 | grams/US kWh |
| Xylenes | 33313.357 | lbs/yr | 5.23E-06 | grams/US kWh |
| o-xylene | 572.918388 | lbs/yr | 8.99E-08 | grams/US kWh |
| Vinyl acetate | 6842.7436 | lbs/yr | 1.07E-06 | grams/US kWh |
| **Trace Metals** | | | | |
| Antimony | 43,801 | lbs/yr | 6.87E-06 | grams/US kWh |
| Arsenic | 376,538 | lbs/yr | 5.91E-05 | grams/US kWh |
| Barium | 20,633 | lbs/yr | 3.24E-06 | grams/US kWh |
| Beryllium | 19,155 | lbs/yr | 3.01E-06 | grams/US kWh |
| Cadmium | 48,371 | lbs/yr | 7.59E-06 | grams/US kWh |
| Chloride | 1,823,878 | lbs/yr | 2.86E-04 | grams/US kWh |
| Chromium | 244,073 | lbs/yr | 3.83E-05 | grams/US kWh |
| Chromium (VI) | 72,432 | lbs/yr | 1.14E-05 | grams/US kWh |
| Cobalt | 122,034 | lbs/yr | 1.91E-05 | grams/US kWh |
| Copper | 9,996 | lbs/yr | 1.57E-06 | grams/US kWh |
| Fluoride | 196,054 | lbs/yr | 3.08E-05 | grams/US kWh |
| Magnesium | 9,903,971 | lbs/yr | 1.55E-03 | grams/US kWh |
| Manganese | 457,748 | lbs/yr | 7.18E-05 | grams/US kWh |
| Mercury | 75,421 | lbs/yr | 1.18E-05 | grams/US kWh |
| Molybdenum | 5,861 | lbs/yr | 9.20E-07 | grams/US kWh |
| Nickel | 687,818 | lbs/yr | 1.08E-04 | grams/US kWh |

## Table E2. Generation Related Outputs - Air Emissions

| Pollutant | Quantity | Units | Converted Quantity | Units |
|---|---|---|---|---|
| Phosphorous | 49,723 | lbs/yr | 7.80E-06 | grams/US kWh |
| Selenium | 1,174,059 | lbs/yr | 1.84E-04 | grams/US kWh |
| Vanadium | 176,674 | lbs/yr | 2.77E-05 | grams/US kWh |
| Zinc | 152,953 | lbs/yr | 2.40E-05 | grams/US kWh |
| **Polynuclear Aromatic Hydrocarbons (PAHs)** | | | | |
| Biphenyl | 1,531 | lbs/yr | 2.40E-07 | grams/US kWh |
| Acenaphthene | 459 | lbs/yr | 8.94E-08 | grams/US kWh |
| Acenaphthylene | 225 | lbs/yr | 3.55E-08 | grams/US kWh |
| Anthracene | 189 | lbs/yr | 3.07E-08 | grams/US kWh |
| Benzo(a)anthracene | 72 | lbs/yr | 1.46E-08 | grams/US kWh |
| Benzo(a)pyrene | 34 | lbs/yr | 5.37E-09 | grams/US kWh |
| Benzo(b,j,k)fluoranthene | 99 | lbs/yr | 1.55E-08 | grams/US kWh |
| Benzo(g,h,i)perylene | 24 | lbs/yr | 5.68E-09 | grams/US kWh |
| Chrysene | 90 | lbs/yr | 1.61E-08 | grams/US kWh |
| Fluoranthene | 639 | lbs/yr | 1.06E-07 | grams/US kWh |
| Fluorene | 819 | lbs/yr | 1.32E-07 | grams/US kWh |
| Indeno(1,2,3-cd)pyrene | 55 | lbs/yr | 8.62E-09 | grams/US kWh |
| Naphthalene | 11,705 | lbs/yr | 2.88E-06 | grams/US kWh |
| Phenanthrene | 2,431 | lbs/yr | 3.95E-07 | grams/US kWh |
| Pyrene | 297 | lbs/yr | 5.25E-08 | grams/US kWh |
| 5-Methyl chrysene | 20 | lbs/yr | 3.11E-09 | grams/US kWh |
| **Dioxins & Furans** | | | | |
| 2,3,7,8-TCDD | 0.012875162 | lbs/yr | 2.02E-12 | grams/US kWh |
| Total TCDD | 0.083553501 | lbs/yr | 1.31E-11 | grams/US kWh |
| Total PeCDD | 0.040246137 | lbs/yr | 6.31E-12 | grams/US kWh |
| Total HxCDD | 0.025840361 | lbs/yr | 4.05E-12 | grams/US kWh |
| Total HpCDD | 0.075090107 | lbs/yr | 1.18E-11 | grams/US kWh |
| Total OCDD | 0.374550176 | lbs/yr | 6.13E-11 | grams/US kWh |
| Total PCDDd | 0.599640426 | lbs/yr | 9.41E-11 | grams/US kWh |
| 2,3,7,8-TCDF | 0.045918411 | lbs/yr | 7.20E-12 | grams/US kWh |
| Total TCDF | 0.363745844 | lbs/yr | 5.71E-11 | grams/US kWh |
| Total PeCDF | 0.317827433 | lbs/yr | 4.99E-11 | grams/US kWh |
| Total HxCDF | 0.172869312 | lbs/yr | 2.71E-11 | grams/US kWh |
| Total HpCDF | 0.069147725 | lbs/yr | 1.08E-11 | grams/US kWh |
| Total OCDF | 0.059693934 | lbs/yr | 9.37E-12 | grams/US kWh |
| Total PCDFd | 0.98139349 | lbs/yr | 1.54E-10 | grams/US kWh |
| TOTAL PCDD/PCDF | 1.58463536 | lbs/yr | 2.49E-10 | grams/US kWh |

[a] The criteria pollutants were not multiplied by the transmission and distribution factor due to their being reported totals for the electric industry.

## Table E3. Generation Related Outputs - Radionuclides

| Isotope | Quantity | Units | Converted Quality | Units |
|---|---|---|---|---|
| **Outputs** | | | | |
| **Airborne Radionuclides** | | | | |
| T-3 | 4606.974412 | Curies/yr | 5.90E+01 | Becquerels/US kWh |
| Ar-41 | 1964.5125 | Curies/yr | 2.51E+01 | Becquerels/US kWh |
| Cr-51 | 0.123263529 | Curies/yr | 1.58E-03 | Becquerels/US kWh |
| Mn-54 | 0.001748801 | Curies/yr | 2.24E-05 | Becquerels/US kWh |
| Co-57 | 0.000331271 | Curies/yr | 4.24E-06 | Becquerels/US kWh |
| Co-58 | 0.00422948 | Curies/yr | 5.41E-05 | Becquerels/US kWh |
| Co-60 | 0.031817399 | Curies/yr | 4.07E-04 | Becquerels/US kWh |
| Kr-85 | 3258.779559 | Curies/yr | 4.17E+01 | Becquerels/US kWh |
| Kr-85M | 157.9313971 | Curies/yr | 2.02E+00 | Becquerels/US kWh |
| Kr-87 | 58.78129559 | Curies/yr | 7.52E-01 | Becquerels/US kWh |
| Rb-88 | 0.645592735 | Curies/yr | 8.26E-03 | Becquerels/US kWh |
| Kr-88 | 275.8021471 | Curies/yr | 3.53E+00 | Becquerels/US kWh |
| Br-89 | 0.000227267 | Curies/yr | 2.91E-06 | Becquerels/US kWh |
| Br-90 | 9.24476E-05 | Curies/yr | 1.18E-06 | Becquerels/US kWh |
| Nb-95 | 6.94898E-05 | Curies/yr | 8.89E-07 | Becquerels/US kWh |
| Zr-95 | 0.000179503 | Curies/yr | 2.30E-06 | Becquerels/US kWh |
| Tc-99M | 9.3218E-06 | Curies/yr | 1.19E-07 | Becquerels/US kWh |
| Ag-110M | 2.07237E-06 | Curies/yr | 2.65E-08 | Becquerels/US kWh |
| I-131 | 0.148686632 | Curies/yr | 1.90E-03 | Becquerels/US kWh |
| Xe-131M | 265.7869853 | Curies/yr | 3.40E+00 | Becquerels/US kWh |
| I-132 | 0.030199565 | Curies/yr | 3.86E-04 | Becquerels/US kWh |
| Xe-133 | 38365.77353 | Curies/yr | 4.91E+02 | Becquerels/US kWh |
| I-133 | 137.9010735 | Curies/yr | 1.76E+00 | Becquerels/US kWh |
| Xe-133M | 2550.014265 | Curies/yr | 3.26E+01 | Becquerels/US kWh |
| Cs-134 | 0.006240216 | Curies/yr | 7.99E-05 | Becquerels/US kWh |
| I-134 | 0.156390603 | Curies/yr | 2.00E-03 | Becquerels/US kWh |
| Xe-135 | 1448.346471 | Curies/yr | 1.85E+01 | Becquerels/US kWh |
| I-135 | 0.00785805 | Curies/yr | 1.01E-04 | Becquerels/US kWh |
| Xe-135M | 27.65725441 | Curies/yr | 3.54E-01 | Becquerels/US kWh |
| Cs-137 | 0.04707126 | Curies/yr | 6.02E-04 | Becquerels/US kWh |
| Xe-138 | 91.67725 | Curies/yr | 1.17E+00 | Becquerels/US kWh |
| **Waterborne Radionuclides** | | | | |
| T-3 | 34436.74853 | Curies/yr | 4.41E+02 | Becquerels/US kWh |
| Na-24 | 0.172568941 | Curies/yr | 2.21E-03 | Becquerels/US kWh |
| Cr-51 | 4.676310147 | Curies/yr | 5.98E-02 | Becquerels/US kWh |
| Mn-54 | 3.081588235 | Curies/yr | 3.94E-02 | Becquerels/US kWh |
| Fe-55 | 11.01667794 | Curies/yr | 1.41E-01 | Becquerels/US kWh |
| Co-57 | 0.113248368 | Curies/yr | 1.45E-03 | Becquerels/US kWh |
| Co-58 | 46.06974412 | Curies/yr | 5.90E-01 | Becquerels/US kWh |

## Table E3. Generation Related Outputs - Radionuclides

| Isotope | Quantity | Units | Converted Quality | Units |
|---|---|---|---|---|
| Fe-59 | 0.565471441 | Curies/yr | 7.24E-03 | Becquerels/US kWh |
| Co-80 | 12.09523382 | Curies/yr | 1.55E-01 | Becquerels/US kWh |
| Zn-85 | 0.052001801 | Curies/yr | 6.65E-04 | Becquerels/US kWh |
| Kr-85M | 2.912100882 | Curies/yr | 3.73E-02 | Becquerels/US kWh |
| Sr-89 | 0.186436088 | Curies/yr | 2.39E-03 | Becquerels/US kWh |
| Sr-90 | 0.043835593 | Curies/yr | 5.61E-04 | Becquerels/US kWh |
| Nb-95 | 0.793508971 | Curies/yr | 1.02E-02 | Becquerels/US kWh |
| Sr-95 | 0.483038956 | Curies/yr | 6.18E-03 | Becquerels/US kWh |
| Mo-99 | 5816497.794 | Curies/yr | 7.44E+04 | Becquerels/US kWh |
| Tc-99M | 0.067640862 | Curies/yr | 8.66E-04 | Becquerels/US kWh |
| Ru-103 | 0.097070029 | Curies/yr | 1.24E-03 | Becquerels/US kWh |
| Ag-110M | 1.132483676 | Curies/yr | 1.45E-02 | Becquerels/US kWh |
| Sn-113 | 0.107085191 | Curies/yr | 1.37E-03 | Becquerels/US kWh |
| Sb-124 | 0.970700294 | Curies/yr | 1.24E-02 | Becquerels/US kWh |
| Sb-125 | 3.867393235 | Curies/yr | 4.95E-02 | Becquerels/US kWh |
| I-131 | 2.157111765 | Curies/yr | 2.76E-02 | Becquerels/US kWh |
| Xe-131M | 35.43826471 | Curies/yr | 4.54E-01 | Becquerels/US kWh |
| I-132 | 0.816620882 | Curies/yr | 1.05E-02 | Becquerels/US kWh |
| Xe-133 | 5446.707206 | Curies/yr | 6.97E+01 | Becquerels/US kWh |
| I-133 | 0.924476471 | Curies/yr | 1.18E-02 | Becquerels/US kWh |
| Xe-133M | 44.60598971 | Curies/yr | 5.71E-01 | Becquerels/US kWh |
| Cs-134 | 2.596238088 | Curies/yr | 3.32E-02 | Becquerels/US kWh |
| I-135 | 0.663311868 | Curies/yr | 8.49E-03 | Becquerels/US kWh |
| Xe-135 | 40.599925 | Curies/yr | 5.20E-01 | Becquerels/US kWh |
| s-136 | 0.104003603 | Curies/yr | 1.33E-03 | Becquerels/US kWh |
| Cs-137 | 3.898209118 | Curies/yr | 4.99E-02 | Becquerels/US kWh |
| Ba-140 | 0.071955085 | Curies/yr | 9.21E-04 | Becquerels/US kWh |
| La-140 | 0.077039706 | Curies/yr | 9.86E-04 | Becquerels/US kWh |

## Table E4. Net Generation Information

| Generation type [a] | Net Generation | |
|---|---|---|
| | (MWh/yr) | % |
| Coal | 1,787,806,000 | 57.255% |
| Gas | 283,625,000 | 9.083% |
| Petroleum | 77,753,000 | 2.490% |
| Nuclear | 628,644,000 | 20.133% |
| Hydro [b] | 337,233,000 | 10.800% |
| Renewables [b] | 7,462,000 | 0.239% |
| Total | 3,122,522,000 | 100.000% |

[a] This breakdown excludes nonutility electricity generation (Non and Independent Power Producers (NPPs or IPPs)), which typically contribute about 11% of the U.S. total (EIA 1999).
[b] Hydro and renewables were excluded from the calculation of inputs and outputs.

## Table E4. Net Generation Information

| Generation type [a] | Net Generation | |
|---|---|---|
| | (MWh/yr) | % |
| Coal | 1,787,806,000 | 57.255% |
| Gas | 283,625,000 | 9.083% |
| Petroleum | 77,753,000 | 2.490% |
| Nuclear | 628,644,000 | 20.133% |
| Hydro [b] | 337,233,000 | 10.800% |
| Renewables [b] | 7,462,000 | 0.239% |
| Total | 3,122,522,000 | 100.000% |

[a] This breakdown excludes nonutility electricity generation (Non and Independent Power Producers (NPPs or IPPs)), which typically contribute about 11% of the U.S. total (EIA 1999).
[b] Hydro and renewables were excluded from the calculation of inputs and outputs.

## Table E5. Conversion Factors

| | | | |
|---|---|---|---|
| Universal factor | 1 pound = | 453.59 | grams |
| Water | 1 gallon = | 8.34 | pounds |
| Coal [a] | 1 pound = | 10,275 | btu |
| Gas [b] | a cubic foot = | 0.0473 | pounds |
| Petroleum | 1 gallon = | 7.26 | pounds |
| Nuclear | 1 Curie = | 3.70E+10 | Becquerals |
| Nuclear (LLRW) | 1 cubic foot = | 80 | pounds |
| Transmission & distribution [c] | 1 kWh out requires = | 1.08 | kWhs in |

[a] Source: EIA's "Cost & Quality of Fuels for Electric Utility Plants 1997," Table ES-4.
[b] Calculated by the CCPCT with reference information from "Perry's Chemical Engineer's Handbook, 6th Edition."
[c] Source: EIA's Short-Term Energy Outlook," Table A8.

# APPENDIX F

## MANUFACTURING DATA COLLECTION QUESTIONNAIRE

this page intentionally left blank

# DESIGN FOR THE ENVIRONMENT COMPUTER DISPLAY PROJECT
## Life-Cycle Inventory (LCI) Data Collection Questionnaire

### Introduction

The Design for the Environment (DfE) Program in the U.S. Environmental Protection Agency's (EPA) Office of Pollution Prevention and Toxics has begun a voluntary, cooperative project with the electronics industry to assess the life-cycle environmental impacts of cathode ray tube (CRT) and liquid crystal display (LCD) desktop monitors. The DfE Program conducts comparative analyses of alternative products or processes to provide businesses with data to make environmentally informed choices about product or process improvements. The DfE Program has no regulatory or enforcement agenda and was established to act as a partner with industry to promote pollution prevention. This environmental life-cycle assessment will address human and ecological risk, energy and natural resource use, performance, and cost of various display technologies. The University of Tennessee (UT) Center for Clean Products and Clean Technologies is conducting the life-cycle inventory (LCI), which is the data collection phase of a life-cycle assessment, with technical assistance from the Asian Technology Information Program, Microelectronics and Computer Technology Corporation, the Electronics Industry Alliance, and other partners.

### Boundaries

A *life-cycle* assessment considers impacts from materials acquisition, material manufacturing, product manufacturing, use, and final disposition of a product. The LCI data are intended to be used to evaluate relative environmental impacts over the entire life-cycle of a product, including transport between life-cycle stages. In this project, the product is either a color CRT or LCD monitor. Therefore, data associated with the materials and processes used directly in the manufacturing, use, and disposition of the product are relevant to the LCI and requested in this questionnaire. You will not need to include materials or energy *not directly* used in the production of the monitor or its components (e.g., general building heating and air conditioning).

### Product focus

This project will evaluate CRT and LCD (twisted nematic and in-plane switching) technologies, based on 1998 production for a 17" CRT and a 15" LCD desktop monitor, with the following approximate specifications:

| | |
|---|---|
| 1024×768 resolution | 200 cd/m$^2$ brightness |
| 100:1 contrast ratio | 262,000 colors |

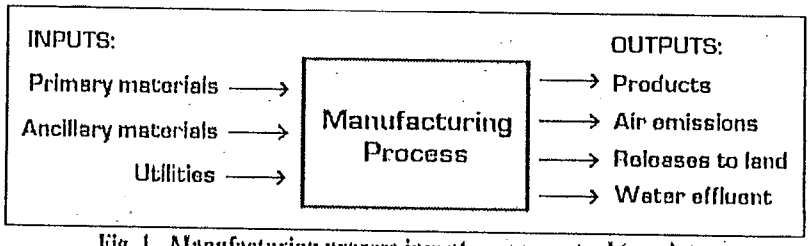


Fig. 1. Manufacturing process inventory conceptual template

### Inventory data

We are asking you for data on a particular "product of interest" that you manufacture, which is defined as a material, component, or subassembly that is part of the product focus defined above. The inputs and outputs data (Fig. 1) that you provide will be aggregated in the LCI to quantify the overall inputs and outputs of a CRT and LCD. Additionally, transportation information is requested in the inventory.

**Data sources**
Much of the requested information can be drawn from existing sources, including, but not limited to the following:

1. Purchase and production records
2. Bills and invoices
3. Material Safety Data Sheets (MSDS)
4. Toxic Release Inventory (TRI) forms
5. Audit and analysis results (e.g., wastewater discharge analyses)
6. Local, state, and federal reporting forms (e.g., hazardous waste manifests)
7. Local, state, and federal permits
8. Monthly utility billing records

**How the data will be used**
UT will aggregate the inventory data and tally the average inputs and outputs for the different monitors. Information gathered by this questionnaire will be used to develop environmental profiles based on inputs and outputs for each stage in the manufacture of displays. The profiles will be used to evaluate environmental impacts from each product. Cost data will also be collected and presented along with environmental results. The environmental profiles can be used to encourage product design changes for product improvement. UT will aggregate data and ensure that data associated with particular companies remain anonymous to the EPA. UT can enter into confidentiality agreements where proprietary data are concerned. Please understand that accurate and representative information from you is critical for the success of this project.

**Results of project**
The results are intended to provide industry with an analysis of the life-cycle environmental impacts, cost, and performance of CRT and LCD computer monitors. Results will help identify areas for product and process improvement as related to risk and environmental impact (e.g., identifying material use inefficiencies) and will identify impacts from various life-cycle stages of the product systems. Use of the results will also help meet growing global demands of extended product responsibility.

**Benefits of involvement**
Your input will allow for your interests to be considered in the project development and data collection. By supplying data, the results will partially reflect your operations and, therefore, the results will be directly relevant to your interests. The project will allow you to directly apply results to your manufacturing process and identify areas for improvement. You will also be recognized as working voluntarily and cooperatively with the U.S. EPA.

**Deadline**
We are attempting to obtain all completed questionnaires before *October 29, 1999*.

***Your cooperation and assistance are greatly appreciated.***

*For any questions, please contact Maria Leet Socolof at 423-974-9526, <socolofml@utk.edu> or Jonathan G. Overly at 423-974-3625, <jgoverly@utk.edu> at the University of Tennessee, 311 Conference Center Bldg., Knoxville, TN 37996-4134. Fax: 423-974-1838.*
*For more project details, see the Project Fact Sheet, DfE Website <www.epa.gov/dfe>, or the Draft Final Goal Definition and Scoping Document.*

## INSTRUCTIONS

1. Please be sure to read the introductory text on each page before filling out the questionnaire.
2. The data you supply in the tables should represent inputs and outputs associated only with the "product of interest" (i.e., materials, components or subassemblies you manufacture that are either part of, or that are itself, the desktop monitor as defined on p. 1 under Product focus). If quantities provided are not specific to the "product of interest," please explain how they differ in the comments section at the bottom of the appropriate table.
3. Where supporting information is available as independent documents, reports or calculations, please provide them as attachments with reference to the associated page(s) or table(s) in this questionnaire.
4. If you have more than one product of interest to this project, please duplicate this questionnaire and fill out one questionnaire for each product.
5. If there is not adequate room on a page to supply your data (including comments), please copy the appropriate page and attach it to this packet.
6. The ensuing pages refer to the four indices shown below to detail specific information about the data. Additional information is provided below as required.
   Data Quality Indicators Index: These indicators will be used to assess the level of data quality in this questionnaire. Please report a DQI for the numerical value requested in each table on the following pages. The first category, Measured, pertains to a value that is a directly measured quantity. The second category, Calculated, refers to a value that required one or more calculations to obtain. The third category, Estimated, refers to a value that required a knowledgable employee's professional judgement to estimate. Lastly, the fourth category, Assumed, should be used only when a number had to be guessed.
   Hazardous and Nonhazardous Waste Management Methods Index: These methods are applicable to both hazardous and nonhazardous wastes (Tables 7a and 7b). Please give the appropriate abbreviation in the Management Method column on p. 7 where requested. Depending on whether the management method is on or offsite, please indicate by specifying "on" or "off" in the appropriate column on p. 7.

For Tables 2, 3a, 3b, 4, 7a, and 7b:

| Transportation Modes Index | |
|---|---|
| A | - Large truck (18-wheeler), diesel |
| B | - Small truck, diesel |
| C | - Small truck, gasoline |
| D | - Rail, diesel |
| E | - Barge, diesel |
| F | - Ocean freighter, diesel |
| G | - Other (please specify in comments section) |

For Tables 3a, 3b, 4, 5, 6a, 7a, and 7b:

| Data Quality Indicators Index | |
|---|---|
| M | - Measured |
| C | - Calculated |
| E | - Estimated |
| A | - Assumed |

For Table 6b:

| Wastewater Treatment/Disposal Methods Index | |
|---|---|
| A | - Direct discharge to surface water |
| B | - Discharge to offsite wastewater treatment facility |
| C | - Underground injection |
| D | - Surface impoundment (e.g., settling pond) |
| E | - Direct discharge to land |
| F | - Other (please specify in comments section) |

For Tables 7a and 7b:

| Hazardous and Nonhazardous Waste Management Methods Index | |
|---|---|
| RU | - Reused |
| R | - Recycled |
| L | - Landfilled |
| Iv | - Incinerated - volume reduction |
| Ie | - Incinerated - energy conversion |
| S | - Solidified/stabilized |
| D | - Deep well injected |
| O | - Other (please specify in comments section) |

**IF YOU HAVE QUESTIONS, PLEASE CONTACT EITHER:**

Maria L. Socolof (Project Manager): Phone: 423-974-9526
Fax: 423-974-1838
Email: socolofml@utk.edu

OR

Jonathan G. Overly (Project Engineer): Phone: 423-974-3625
Fax: 423-974-1838
Email: jgoverly@utk.edu

**OFFICE OF MANAGEMENT AND BUDGET STATEMENT**

The public reporting and recordkeeping burden for this collection of information is estimated to average 8 hours per response. Burden means the total time, effort, or financial resources expended by persons to generate, maintain, retain, or disclose or provide information to or for a Federal agency. The burden for this collection includes the time needed to review instructions; search data sources; complete and review the collection of information; and transmit or otherwise disclose the information. An agency may not conduct or sponsor, and a person is not required to respond to a collection of information unless it displays a currently valid OMB control number. The OMB control number for this collection is 2070-0152.

Send comments on the Agency's need for this information, the accuracy of the provided burden estimates, and any suggested methods for minimizing respondent burden, including through the use of automated collection techniques to the Director, OPPE Regulatory Information Division, U.S. Environmental Protection Agency (2136), 401 M Street, S.W., Washington, DC 20460. Include the OMB control number in any correspondence.

## 1. FACILITY & CONTACT INFORMATION

| Table 1. | Facility Information | | Contact Information | |
|---|---|---|---|---|
| 1. Company name: | | 5a. Prepared by: | | Date: |
| 2. Facility name: | | 5b. Title: | | |
| 3. Facility address (location): | | 5c. Phone number: | | Ext.: |
| | | 5d. Fax number: | | |
| | | 5e. Email address: | | |

4. Products manufactured onsite: _____

## 2. PRODUCT OF INTEREST INFORMATION

Table 2.

NOTE: If the product of interest is an assembled monitor, please send an Owner's Manual to us at the address shown at the bottom of page ii.

1. Product of interest: _____

2. 1998 annual production (e.g., units, kg, lbs): _____

3. Facility's percent global market share for product of interest: _____

4. Product of interest unit weight: _____

5. 1998 product of interest retail unit price: _____

6. Energy consumption information (fill out only if the product of interest is an assembled monitor):
   - Active use: _____ watts
   - Standby: _____ watts
   - Suspend: _____ watts
   - Active off: _____ watts

7. Performance specifications (fill out only if the product of interest is an assembled monitor):
   - Maximum resolution: _____
   - Colors (at max. reso.): _____
   - Contrast ratio: _____
   - Brightness: _____ cd/m²

8. Brief description of the main operations/subprocesses required to manufacture the product of interest: _____

9. Product transport information. In this table, please list the top five locations (by quantity) to which you send the product of interest. You may supply one-way distances in lieu of locations. See Transportation Modes Index on p. iii for modes abbreviations. Percent capacity represents what percent of the transport vehicle's total load was carrying the products of interest.

| | Location (City, State, Country) | Distance | Percent of production | Mode | Number of trips annually | Percent capacity |
|---|---|---|---|---|---|---|
| 1) | | | | | | |
| 2) | | | | | | |
| 3) | | | | | | |
| 4) | | | | | | |
| 5) | | | | | | |

10. Does your facility receive any returned products from your customers? If so, is the product recycled in some way or disposed? Please explain: _____

## 3. PRIMARY & ANCILLARY INPUTS

1. Primary & Ancillary Materials: Primary materials, are defined as those materials that become part of the final product. Ancillary materials are those material inputs that assist production, yet do not become part of the final product. Please include the trade name and the generic name of each material where applicable.
2. CAS # or MSDS: Please either supply the chemical CAS (Chemical Abstract Service) number or attach a material "MSDS" to this document.
3. Annual quantity/units & Density/units: Please specify the amount of material consumed in 1998. Please use the units of mass-per-year (e.g., kg/yr, lb/yr). If you specify units of volume in lieu of mass, please provide the density.
4. Data quality indicators: See the Data Quality Indicators Index on p. iii for abbreviations. Please supply the DQI for the *annual quantity* value given.
5. Recycled content: Please specify the recycled content of each material identified. For example, 60/40/0 would represent a material that has 60% virgin material, 40% pre-consumer recycled and 0% post-consumer recycled content. Enter N/A (not applicable) for all components that are assemblies.
6. Transportation information: See the Transportation Modes Index on p. iii for mode abbreviations. Please specify the one-way transportation distance, or the location from where the material is shipped, and the number of trips made to your facility on an annual basis. % capacity represents what percent of the transport vehicle's total *load* was carrying the materials of interest.

| Table 3a. Primary Materials[1] | CAS # or MSDS[2] | Annual Quantity[3] | Units | Density[3] | Units | DQI[4] | Recycled Content[5] | Transportation Information (Receiving)[6] | | | |
|---|---|---|---|---|---|---|---|---|---|---|---|
| | | | | | | | | Dist. or Location | Mode | # trips | % cap. |
| *EXAMPLE: GRTX resin (polypropylene resin)* | *MSDS* | *450,000* | *kg/yr* | | | *M* | *60/40/0* | *450 km* | *A* | *24* | *40* |
| 1. | | | | | | | | | | | |
| 2. | | | | | | | | | | | |
| 3. | | | | | | | | | | | |
| 4. | | | | | | | | | | | |
| 5. | | | | | | | | | | | |
| 6. | | | | | | | | | | | |
| 7. | | | | | | | | | | | |

Primary material comments:

| Table 3b. Ancillary Materials[1] | CAS # or MSDS[2] | Annual Quantity[3] | Units | Density[3] | Units | DQI[4] | Recycled Content[5] | Transportation Information (Receiving)[6] | | | |
|---|---|---|---|---|---|---|---|---|---|---|---|
| | | | | | | | | Dist. or Location | Mode | # trips | % cap. |
| *EXAMPLE: Petroleum naphtha (cleaning solvent)* | *8032-32-4* | *920* | *liters/yr* | *0.96* | *kg/liter* | *C* | *100/0/0* | *St. Louis, MO* | *C* | *2* | *100* |
| 1. | | | | | | | | | | | |
| 2. | | | | | | | | | | | |
| 3. | | | | | | | | | | | |
| 4. | | | | | | | | | | | |
| 5. | | | | | | | | | | | |
| 6. | | | | | | | | | | | |
| 7. | | | | | | | | | | | |

Ancillary material comments:

## 4. UTILITY INPUTS

1. Annual quantity/units: Please specify the amount of each utility consumed in 1998. If possible, please exclude nonprocess-related consumption. If not possible, please include a comment that nonprocess-related consumption is included.
2. Data quality indicators: See the Data Quality Indicators Index on p. iii for abbreviations. Please supply the DQI for the *annual quantity* value given.
3. Transportation information: See the Transportation Modes Index on p. iii for mode abbreviations. Please specify the one-way transportation distance, or the location from where the fuel is shipped, and the number of trips made to your facility on an annual basis. % capacity represents what percent of the transport vehicle's total *load* was carrying the materials of interest.
4. Individual Utility Notes:

**Electricity:**
The quantity of electricity should reflect only that used toward manufacturing the product of interest (identified on p. 2). One approach would be to start with your facility's total annual electrical energy consumption, estimate and remove nonprocess-related consumption, then estimate what portion of the remaining consumption is related to the specific operations of interest (if you manufacture more than one product). Please include consumption in all systems that use electricity for process-related purposes. Some examples include compressed air, chilled water, water deionization and HVAC consumption where clean or controlled environments are utilized.

**Natural gas and LNG:**
Please exclude all use for space heating or other nonprocess-related uses. If you choose to use units other than MCF (thousand cubic feet), please utilize only units of energy content or volume (e.g., mmBTU, therm, CCF).

**Fuel oils:**
Please use units of either volume or energy content (e.g., liters, cubic meters, mmBTU, MJ). Additionally, if the fuel oil is delivered by pipeline, enter "pipeline" in the Transportation Information space; if not delivered by pipeline, please include the associated transportation information.

**All waters (e.g., deionized, city):**
Please include all waters received onsite. Please indicate consumption in units of mass or volume.

| Table 4. | Utilities[4] | Annual Quantity[1] | Units | DQI[2] | Transportation Information (Receiving)[3] | | | |
|---|---|---|---|---|---|---|---|---|
| | | | | | Dist. or Location | Mode | # trips | % cap. |
| 1. | Electricity | | MJ | | | | | |
| 2. | Natural gas | | MCF | | | | | |
| 3. | Liquified natural gas (LNG) | | MCF | | | | | |
| 4. | Fuel oil - type #2 (includes distillate and diesel) | | liters | | | | | |
| 5. | Fuel oil - type #4 | | liters | | | | | |
| 6. | Fuel oil - type #6 (includes residual) | | liters | | | | | |
| 7. | Propane | | liters | | | | | |
| 8. | Water | | liters | | | | | |
| 9. | | | | | | | | |
| 10. | | | | | | | | |
| 11. | | | | | | | | |
| 12. | | | | | | | | |
| 13. | | | | | | | | |

Utility comments:

## 5. AIR EMISSIONS

1. Air emissions: The emissions listed in the table below are some of the more common ones found in air release inventories; if you have information on other specific emissions, please include that information in the space provided. If you have any reporting forms or other air emission records for 1998, please attach copies to this questionnaire. Also, if you have information on stack as well as fugitive emissions, please copy this page and place each set of emissions on a different page. The energy consumed in any equipment used onsite to treat air emissions should be included in the utilities values on p. 4.
2. Annual quantity/units: Please specify the amount of air emissions generated in 1998. If you do not have 1998 emissions data, use the next closest year's data you have and specify what year's data you are supplying in the comment section below. Please use units of mass-per-year (e.g., kg/yr, lb/yr).
3. Data quality indicators: See the Data Quality Indicators Index on p. iii for abbreviations. Please supply the DQI for the *annual quantity* value given.

| Table 5. Air Emissions[1] | CAS number | Annual Quantity[2] | Units | DQI [3] |
|---|---|---|---|---|
| Total particulates | ----- | | | |
| Particulates < 10 microns (PM-10) | ----- | | | |
| Sulfur oxides (SOx) | ----- | | | |
| Nitrogen oxides (NOx) | ----- | | | |
| Carbon monoxide | 630-08-0 | | | |
| Carbon dioxide | 124-38-9 | | | |
| Methane | 74-82-8 | | | |
| Benzene | 71-43-2 | | | |
| Toluene | 108-88-3 | | | |
| Xylenes | 1330-20-7 | | | |
| Naphthalene | 91-20-3 | | | |
| Total nonmethane VOCs | ----- | | | |
| Other speciated hydrocarbon emissions: | | | | |
| 1. | | | | |
| 2. | | | | |
| 3. | | | | |
| 4. | | | | |
| 5. | | | | |
| 6. | | | | |
| 7. | | | | |
| 8. | | | | |
| 9. | | | | |
| 10. | | | | |
| 11. | | | | |
| 12. | | | | |

| Table 5 (continued). Air Emissions[1] | CAS number | Annual Quantity[2] | Units | DQI [3] |
|---|---|---|---|---|
| Ammonia | 7664-41-7 | | | |
| Arsenic | 7440-38-2 | | | |
| Chromium | 7440-47-3 | | | |
| Copper | 7440-50-8 | | | |
| Lead | 7439-92-1 | | | |
| Manganese | 7439-96-5 | | | |
| Mercury | 7439-98-7 | | | |
| Nickel | 7440-02-0 | | | |
| Other emissions: | | | | |
| 1. | | | | |
| 2. | | | | |
| 3. | | | | |
| 4. | | | | |
| 5. | | | | |
| 6. | | | | |
| 7. | | | | |
| 8. | | | | |
| 9. | | | | |
| 10. | | | | |

Air emission comments:

## 6. WASTEWATER RELEASES & CONSTITUENTS

1. Annual quantity/units: Please specify the amount of wastewater(s) generated in 1998. Please use units of mass-per-year (e.g., kg/yr, lb/yr). If multiple streams exist, please copy this page and fill it out for each stream.
2. Data quality indicators: See the Data Quality Indicators Index on p. iii for abbreviations. Please include one DQI for the annual wastewater stream quantity value supplied, and one DQI for the wastewater constituents information supplied. If more than one DQI is applicable to the wastewater constituents data, please clarify this in the comment section.
3. Wastewater constituents: Please let us know what type of values you are supplying (e.g., daily maximums, monthly averages, annual averages). Additionally, if you have any reporting forms of other wastewater constituent records for the 1998, please attach them to this questionnaire. The energy consumed in any equipment used onsite to treat wastewater releases should be included in the utilities values on p. 4.
4. Concentration/units: Please specify the concentration of wastewater constituents generated in 1998. Please utilize the units of mass-per-volume (e.g., mg/liter, lb/gal).
5. Wastewater treatment/disposal (WW T/D) method: See the Wastewater Treatment/Disposal Methods Index on p. iii for method abbreviations.

| Table 6a. Wastewater Stream | Annual Quantity[1] | Units | DQI for Wastewater Annual Quantity[2] | DQI for Wastewater Constituents[2] |
|---|---|---|---|---|
| | | | | |

| Table 6b. Wastewater Constituents[3] | CAS number | Concentration[4] | Units | WW T/D Method[5] |
|---|---|---|---|---|
| Dissolved solids | ----- | | | |
| Suspended solids | ----- | | | |
| Chemical Oxygen Demand (COD) | ----- | | | |
| Biological Oxygen Demand (BOD) | ----- | | | |
| Oil & grease | ----- | | | |
| Hydrochloric acid | 7647-01-0 | | | |
| Sulfuric acid | 7664-93-9 | | | |
| Other acids (please specify): | | | | |
| 1. | | | | |
| 2. | | | | |
| Phosphorus | 7723-14-0 | | | |
| Phosphates | ----- | | | |
| Sulfates | ----- | | | |
| Fluorides | ----- | | | |
| Cyanide | ----- | | | |
| Chloride | ----- | | | |
| Chromium | 7440-47-3 | | | |
| Iron | 7439-89-6 | | | |
| Aluminum | 7429-90-5 | | | |
| Nickel | 7440-02-0 | | | |

| Table 6b (continued). Wastewater Constituents[3] | CAS number | Concentration[4] | Units | WW T/D Method[5] |
|---|---|---|---|---|
| Mercury | 7439-98-7 | | | |
| Lead | 7439-92-1 | | | |
| Nitrogen | 7727-37-9 | | | |
| Zinc | 7440-66-6 | | | |
| Tin | 7440-31-5 | | | |
| Ferrous sulfate | 7720-78-7 | | | |
| Ammonia | 7664-41-7 | | | |
| Nitrates | ----- | | | |
| Pesticides | ----- | | | |
| Other constituents: | | | | |
| 1. | | | | |
| 2. | | | | |
| 3. | | | | |
| 4. | | | | |
| 5. | | | | |
| 6. | | | | |

Wastewater comments:

## 7. HAZARDOUS & NONHAZARDOUS WASTES

1. Hazardous wastes and EPA hazardous waste numbers: Please list your waste streams that are considered hazardous by the U.S. EPA. Include the hazardous waste codes for any hazardous waste you include.
2. Annual quantity/units & Density/units: Please specify the amount of waste generated in 1998. Use units of mass-per-year (e.g., kg/yr, lb/yr). Please also provide the density for each waste.
3. Data quality indicators: See the Data Quality Indicators Index on p. iii for abbreviations. Please supply the DQI for the *annual quantity* value given.
4. Management method: See the Management Methods Index on p. iii for abbreviations. If none are applicable, please indicate other and use the comments section to expound.
5. Transportation information: See the Transportation Modes Index on p. iii for mode abbreviations. Please specify the one-way transportation distance, or the location to where the waste is shipped, and the number of trips made from your facility on an annual basis. % capacity represents what percent of the transport vehicle's total *load* was carrying the wastes of interest.

| Table 7a. Hazardous Wastes[1] | EPA Haz. Waste #[1] | Annual Quantity[2] | Units | Density[2] | Units | DQI[3] | Mgmt. method[4] | On or offsite? | Transportation Information (Shipping)[5] Dist. or Location | Mode | # trips | % cap. |
|---|---|---|---|---|---|---|---|---|---|---|---|---|
| *EXAMPLE: Spent solvent (toluene)* | *F005* | *20,000* | *kg/yr* | *0.9* | *kg/liter* | *M* | *Ie* | *off* | *Indianapolis, IN* | *A* | *24* | *40* |
| 1. | | | | | | | | | | | | |
| 2. | | | | | | | | | | | | |
| 3. | | | | | | | | | | | | |
| 4. | | | | | | | | | | | | |
| 5. | | | | | | | | | | | | |
| 6. | | | | | | | | | | | | |
| 7. | | | | | | | | | | | | |
| 8. | | | | | | | | | | | | |

Hazardous waste comments:

| Table 7b. Nonhazardous Wastes | Annual Quantity[2] | Units | Density[2] | Units | DQI[3] | Mgmt. method[4] | On or offsite? | Transportation Information (Shipping)[5] Dist. or Location | Mode | # trips | % cap. |
|---|---|---|---|---|---|---|---|---|---|---|---|
| *EXAMPLE: Waste metal chips* | *22,000* | *kg/yr* | *1,000* | *kg/m3* | *C* | *R* | *off* | *225 km* | *A* | *2* | *100* |
| 1. | | | | | | | | | | | |
| 2. | | | | | | | | | | | |
| 3. | | | | | | | | | | | |
| 4. | | | | | | | | | | | |
| 5. | | | | | | | | | | | |
| 6. | | | | | | | | | | | |
| 7. | | | | | | | | | | | |

Nonhazardous waste comments:

# APPENDIX G

## SUPPLEMENTAL MANUFACTURING DATA INFORMATION

this page intentionally left blank

# APPENDIX G

## SUPPLEMENTAL MANUFACTURING DATA INFORMATION

### G-1. Frit Manufacturing Data Collection

No manufacturers were willing to supply complete frit manufacturing data as primary data for this study. Inventory data for the frit manufacturing process were obtained from secondary sources and from communications with industry representatives. Input data were derived from personal communication with an industry representative (Peer 2000) and output data were compiled from the U.S. Environmental Protection Agency's (EPA) *AP-42* publication (*Compilation of Air Pollutant Emission Factors*) (EPA 1997). The AP-42 data are provided for one ton of feed material, and it was assumed that the material efficiency is 100%, such that for each mass quantity of raw material input, the same mass quantity of frit is produced.

Limitations to these data are that a complete inventory, with all the information asked in the questionnaire for other manufacturing processes in this study, was not obtained. Personal communications were made to provide information on the major inputs to the process, based on a conversation taken place in June, 2000. The output data are based on a 1997 EPA publication. The publication date of the output data remains within the range of dates of primary data obtained in this study. Further, the frit manufacturing process is expected to be a relatively mature technology (compared to some LCD-related technologies), and 1997 data are expected to be representative of the monitors being studied in this project.

### G-2. Printed Wiring Boards (PWBs) and Electronic Component Manufacturing Data Collection

Each display technology requires electronic printed wiring boards (PWBs) and their associated components such as integrated circuit (IC) chips, resistors, capacitors to operate the displays, independent of the computer's central processing unit. Therefore, the display PWBs and components are within the bounds of the analysis.

PWB and semiconductor (IC) manufacturing are highly energy and resource intensive processes. In purely a comparative analysis, we could consider eliminating the PWBs from the analysis since both the CRT and LCD display technologies use PWBs. However, the number of PWBs (4 major ones for LCDs and 2 for CRTs) and their makeup differ between the two technologies. For example, the AMLCD controller has more active parts because its addressing system is more complicated than the CRT. Therefore, exclusion of the PWB manufacturing process was chosen to be included in the scope of this project. In addition, beyond the goal of a comparative analysis between CRT and LCD, this study is intended to provide baseline data for each individual technology such that improvement assessments can be considered when evaluating the entire life cycle of a particular monitor. This provides another reason to include PWB manufacturing in the scope. However, due to the importance of collecting primary data for the other major display components (e.g., CRT tube and LCD panel/module manufacturing), a lower priority was given to obtaining PWB data.

Given the lower priority for PWB and component data collection, questionnaires were not sent to multiple PWB and component manufacturers. Alternatively, data were obtained from an industry contact knowledgeable in PWB manufacturing (Sharp 2000). PWB component manufacturing data were not obtained; however, materials use as well as energy consumption from manufacturing PWB components are expected to be small in comparison to the overall manufacturing requirements for the CRT and LCD monitors; therefore, lack of PWB component manufacturing data is not expected to have a significant impact on the results.

## REFERENCES

EPA (Environmental Protection Agency). 1997. *Compilation of Air Pollutant Emission Factors (AP-42).* Fifth Edition, Volume I. June.

Peer, J. 2000. Personal communication with J. Peer, Techneglas, and J. G. Overly, University of Tennessee, Center for Clean Products and Clean Technologies. June.

Sharp, J. 2000. Personal communication with J. Sharp, Teredyne Corp.; J. G. Overly and M. Socolof, University of Tennessee, Center for Clean Products and Clean Technologies. August.

this page intentionally left blank

# APPENDIX H

## TECHNICAL MEMORANDUM:
## Use Life-Cycle Stage Approach

this page intentionally left blank

# APPENDIX H

## TECHNICAL MEMORANDUM:
## Use Life-Cycle Stage Approach

## 1. INTRODUCTION

### 1.1 Background

As part of the Environmental Protection Agency's Design for the Environment Program (DfE) Computer Display Project (CDP), the University of Tennessee Center for Clean Products and Clean Technologies is conducting an environmental life-cycle assessment (LCA) of 17" cathode ray tube (CRT) and 15" active matrix liquid crystal display (LCD) computer monitors. Chapter 1 of this report provides further details about the scope and boundaries of this project. As typically defined in LCA, the five main life-cycle stages of any product are as follows:

- Materials Extraction;
- Materials Processing;
- Product Manufacture;
- Product Use, Maintenance and Repair; and
- End-of-Life.

This technical memorandum (TM) presents the CDP's approach to developing the inventory that will be used to assess the environmental and health impacts from the use life-cycle stage of computer monitors. Maintenance and repair are not included within the boundaries of this analysis because they are expected to be minor contributors to environmental impacts compared to use and other life-cycle stages.

The purpose of this TM is to present the approach for developing the inventory of inputs and outputs associated with the actual use of the monitors. The final use-stage inventory will consist of electricity consumption from use as well as the indirect inputs and outputs from the generation of that electricity. The focus of this TM is on identifying the amount of electricity consumed during use. The inventory from electricity generation is presented in Appendix E. The final use-stage inventory combines these two sets of data and will be presented as part of the final LCI in Section 2.7 and Appendix J of this report.

In addition to energy consumption, other environmental or health issues have been associated with the use of computer monitors, including eye strain, ergonomics, and exposure to electric and magnetic fields. However, quantitative methods for assessing these impacts within the project LCA framework are not available. Thus, these impacts will be addressed qualitatively in the final LCA report for the project.

## 1.2 Calculating Energy Consumption During the Use Stage

CRTs and LCDs use different mechanisms to produce images on screen, which result in different energy use rates. These energy use rates can be combined with the number of hours a desktop monitor is on during its lifespan to calculate the total quantity of electrical energy consumed during the use life-cycle stage. In this project, two lifespan scenarios are considered:

- Manufactured life - the amount of time either an entire monitor or a single component will last before reaching a point where the equipment no longer functions, independent of user choices.
- Effective life - the actual amount of time a monitor is used, by one or multiple users, before it is disposed of, recycled, or re-manufactured. Reuse of a monitor by a subsequent user is considered part of its effective life. Recycling, on the other hand, is the reuse of parts or materials that require additional processing after disassembly and it is not considered part of the use stage.

These two scenarios are considered in this project in order to account for potential differences between how consumers *currently* use the equipment and how consumers could use the equipment. Currently, consumers often replace monitors before they physically break down. This behavior results in a lifespan that is not dependent on the monitor technology itself. The manufactured life, on the other hand, is based on the technology and represents how consumers could potentially use the equipment. If the lifespans are significantly different, the difference could have a large impact on how the use stage compares to the other life-cycle stages in this study. The remainder of this TM is broken down into the following sections: Methodology, Preliminary Results, Data Sources and Quality, Limitations and Uncertainties, and Discussion and Conclusions.

## 2. METHODOLOGY

As discussed in the previous section, calculating electrical energy consumption during the life of an electrical component requires two main pieces of information: the component's energy use rate (typically in watts or kilowatts) and the amount of time the component can or does spend in use (in hours per life).

Once energy use rates and hours per life in each mode are known, they can be multiplied to derive the total number of kilowatthours (kWh) consumed during the lifetime of a monitor according to the following general equation where " mode *I*" indicates the power consumption mode of a monitor (i.e., full-on or low, discussed further in Sect. 2.1). This basic equation will be used to calculate the total kWhs consumed over the manufactured and effective lives for LCDs and CRTs.

$$\sum_{i=1}^{2} \left[ (kW \ \ consumed \ in \ mode \ i) \ x \left( \frac{hours}{life} \ \ spent \ in \ mode \ \ i \right) \right] = \frac{kWh}{life}$$

Section 2.1 presents information on the various energy use rates that exist for the project functional units in different power modes. Section 2.2 presents the methodology for calculating hours per life under the manufactured and effective life scenarios.

## 2.1 Energy Use Rate

Most desktop monitors manufactured today are built to use several different power consumption modes during normal operation. There are often up to four different power consumption modes that can be used by a monitor in going from a state of active use to a state of almost complete shut-down. These four modes, from greatest power consumption to least, are typically entitled 'full-on' or active use, 'standby,' 'suspend' and 'active-off.' For this TM, manufacturers' data on these power modes were collected from company contacts and Internet sites for 35 different 17" CRT monitors and 12 different 15" LCD monitors. The complete list of these data is presented in Attachment A, Table A1.

For the purposes of this TM, the power consumption modes have been categorized into two modes: 'full-on' and 'low.' The 'low' power mode is an average of the three low power modes typically provided by the manufacturers (i.e., standby, suspend, and active-off). These three categories were averaged to create one 'low' power consumption mode because hours per use data (needed for calculations in this TM) are only available for a 'full-on' and a reduced power mode. The low mode value for the CRT is the average of the three modal averages of standby, suspend and active-off. For the LCD, data on only two low-power modes (standby and active-off) were provided by manufacturers (see Attachment A, Table A2), and therefore, the low mode value is an average of those two modal averages. Table 1 presents the average values for full-on and low power modes that were used for subsequent calculations in this TM.

**Table 1. Average Energy Use Rates [a]**

| Monitor Type | Full-on Power Mode | | Low Power Mode [b] | |
|---|---|---|---|---|
| | (W) | (kW) | (W) | (kW) |
| 17" CRT | 112 | 0.113 | 13.1 | 0.013 |
| 15" LCD | 39.7 | 0.040 | 6.44 | 0.006 |

[a] See Attachment A, Table A1 for source data.
[b] An average of company-reported values for standby, suspend and active-off (see Attachment A, Table A1).

## 2.2 Calculating Lifespan

As stated previously, lifespan calculations in this TM are based on two different scenarios: manufactured life and effective life. Sects. 2.2.1 and 2.2.2 present the methodology and data needed to calculate energy use under each of these two scenarios, respectively. Sect. 2.2.2 is further divided into discussions of office versus home use patterns, the amount of time a monitor is operating in each power mode, and the number of years the monitor is operating in its lifetime. These results will be combined with data from the energy use rate calculations in Sect. 2.1 to obtain the energy consumption per life for each scenario and for each monitor.

### *2.2.1 Scenario #1: Manufactured Life*

The manufactured life is defined here as the length of time a monitor is designed to operate effectively for the user. It is the number of hours a monitor would function as manufactured, and is independent of user choices or actions. One way to estimate this manufactured life is to use the mean-time-before-failure (MTBF) specification of a monitor or its components. The CRT MTBF specification dictates the amount of time the display must operate before it reaches its brightness 'half-life,' or the ability to produce 50% of its initial, maximum brightness. The MTBF value, generally provided in total hours per life of a monitor, is what most final manufacturers or assemblers of personal computer (PC) equipment, including monitor assemblers, typically specify for a component. To meet the specification, suppliers typically calculate the MTBF (a military-based specification) based on component data. Suppliers' test results are usually called the 'calculated' MTBF. The MTBF value also depends on which combination of power modes are used during testing, which is referred to as the 'duty cycle' and each supplier may use a different duty cycle to test their component.

Additionally, monitor assemblers will often perform their own testing, typically entitled 'demonstrated' MTBF. The testing includes sequences where the monitor is 'stressed' by quickly switching back and forth from an all black picture to an all white one, or quickly switching individual pixels either on and off or through multiple colors or black and white. Manufacturers typically find that their demonstrated MTBF is on the order of twice as long as the calculated MTBF (McConnaughey 1999, Douglas 1999). However, it should be noted that the demonstrated MTBF is not a real-time testing method, as the testing data is used in a complex equation to calculate that 'demonstrated' value.

From review of the information obtained on CRT-based monitors (see Attachment A, Table A2), it appears that the CRT itself is the limiting component, or the component that 99% of the time determines whether the entire monitor has reached its end-of-life. Thus, from the limited information that was obtained on CRTs, and the limited confidence that can be instilled in that data, an average of the two ranges obtained on the estimated lifetime of CRTs (10,000 - 15,000 hours) was used as the CRT manufactured lifetime (12,500 hours) (Goldwassar 1999, Douglas 1999).

For active matrix LCDs, the components that have the greatest potential to fail first are the display panel itself (including the liquid crystals and thin-film transistors), backlights, driver integrated circuit (IC) tabs, and other smaller components. The backlights and driver IC tabs can be field-replaced, thus their failure does not necessarily represent the end of the monitor's life. However, failure of the liquid crystals or transistors, which would require replacement of the display panel itself, would most likely mean that the monitor cannot be cost-effectively repaired. The MTBFs of all these components appear to have a broad range. For example, different backlight manufacturers reported from as few as 15,000 hours to as many as 50,000 hours (Douglas 1999, Tsuda 1999, VP150 1999). However, it appears that those components that are not field-replaceable (e.g., the LCD panel) have MTBFs in the range of 40,000 - 50,000 hours (Tsuda 1999, Young 1999). Thus in this TM, the amount of time an LCD monitor would operate during its manufactured life is assumed to be the average of the two non field-replaceable values, or 45,000 hours. In order for a monitor to operate for 45,000 hours, any major field-replaceable parts that have MTBFs less than 45,000 hours will need to accounted for in this LCA project. For example, assuming the backlights last on average 32,500 hours (the average of the values

obtained for backlights), two would be needed for every panel during its lifetime. Therefore, in the final CDP LCA, the manufacturing of these type of components would need to be included in the inventory.

Little information is available on the duty cycles that component manufacturers use to test components. Thus, it is assumed that the average duty cycle utilized in testing components is 50% of the time tested in full-on mode and 50% in a lower power mode. Table 2 shows the values that are used in this TM for the hours per manufactured life for the CRT and LCD. The LCD manufactured life (45,000 hours) is 3.6 times greater than the CRT manufactured life (12,500 hours). Therefore, based on equivalent use periods, 3.6 CRTs would need to be manufactured for every single LCD.

**Table 2. Manufactured Life Values**

| Monitor Type | Total Hours (hours/life) | Mode | Duty Cycle (% time spent in each mode during testing) | Hours per Mode (hours/life) |
|---|---|---|---|---|
| 17" CRT | 12,500 | Full-on | 50% | 6,250 |
| | | Low | 50% | 6,250 |
| 15" LCD | 45,000 | Full-on | 50% | 22,500 |
| | | Low | 50% | 22,500 |

*2.2.2 Scenario #2: Effective Life*

The effective life scenario attempts to model the actual quantity of hours that an average monitor spends in each of the two primary power consumption modes (full-on and a lower power state) during its lifetime. The effective life of an average monitor is based on the following information:

- The proportion of computers that are used in an office environment versus a home environment, to account for different use rates in these two basic user environments;
- The amount of time in a year a typical monitor spends in full-on power mode and in a lower power-consuming mode for both office and home environments; and
- The number of years a typical monitor is used during its lifespan for both office and home environments, not including years in storage before a monitor is replaced or discarded (as it is not consuming power during storage).

Under this lifespan scenario, we assume there is no difference in the amount of time a CRT or LCD monitor is operating. That is, the hours per life for the effective life calculation is not technology-dependent. Therefore, the same set of hours-per-life values are used to calculate the kWhs used per effective lifetime for a CRT and an LCD. The remainder of this section discusses the data and methods used to calculate the final hours-per-life values used in the effective life scenario. In order to obtain these final values, we need to determine the percentage of office versus home environment users, the annual use operating patterns in the office and home environments (hours/year) within each power mode, and the number of years a monitor is in operation during life. The following three subsections address these data needs.

2.2.2.1 Percentages of Office- and Home-Environment Users

Home and office users of computer equipment do not follow the same use patterns. Thus, data are needed on the percent of users in each environment to determine the use pattern of an "average" computer monitor. The most recent data available for both home and office users are for 1997. The Computer Industry Almanac for 1997 reports an estimated 117 million total computers were in use in the United States in 1997 (CIA 1997). In addition, the 1997 Residential Energy Consumption Survey (RECS) reports that 43 million PCS were used in homes in 1997 (EIA 1999). Therefore, assuming the remaining non-household computer monitors are all in office environments, there would be approximately 74 million computers being used in office environments.

Note that an 'office' environment may be a school, hospital, or other commercial environment, and the computers they use may follow widely varying degrees of use. For example, computers (and thus monitors) in a school may only be used a few hours in a day, while hospitals might operate theirs nearly constantly. For this TM, it is assumed that on average, typical office use patterns (to be presented in Sect. 2.2.2.2) are representative of all non-home environment users.

The 1997 RECS also reported that 6% of the 43 million household computers were used to telecommute (EIA 1999), which equals approximately 2.6 million computers. The use pattern of a telecommuter is assumed to resemble more closely an office environment than a home environment; therefore, the number of office environment monitors is assumed to total 76.6 million. Therefore, for purposes of calculations in this TM, the percentage breakdown of office and home environment monitors in the United States is as follows:

- Office: (74 million + 2.6 million) / 117 million = 65%
- Home: (43 million - 2.6 million) / 117 million = 35%.

2.2.2.2 Operating Pattern (Average Hours in Use Per Year )

In order to determine the amount of electricity consumed during a monitor's effective life, we need to know the use operating patterns for both the office and home environments. The 'operating pattern' is defined here as the number of hours per year spent in each power mode. The average number of hours per mode per year will be the weighted average of the two user environments (i.e., 65% office, 35% home).

A literature search for computer monitor operating patterns was conducted for both office and home environments and a summary of literature reviewed is presented in Attachment A, Table A3. For data on office environment operating patterns, the most relevant and complete information found was from work performed by Lawrence Berkeley National Laboratory (LBNL) presented in a report entitled "Measured Energy Savings and Performance of Power-Managed Personal Computers and Monitors" (Nordman et al. 1996). Their definition of the standard operating pattern was based on earlier work performed by LBNL that studied electricity use by office equipment in commercial buildings, and referenced multiple studies on the use of office equipment, some having sample sizes as large as several hundred systems. Table 3 presents the standard office operating pattern for three different types of days (workday, weekend day and absence day), based on Nordman et al. (1996). Note that Nordman et al. "...first distinguish between weekdays and weekend days, with the latter including only Saturdays and Sundays. Then, any weekday which has less than half an hour of on-time (full-on or low power) is considered an absence day; the rest of the weekdays are workdays." Therefore, absence days may include some hours in operation. Also, some individuals may leave their computers on while out of the office, also resulting in hours in operation while the user is out of the office.

**Table 3. Standard Office Operating Pattern[a]**

| Type of Day | Standard Office Operating Pattern | | | |
|---|---|---|---|---|
| | On | | | Off |
| | Full-on | Low | Total | |
| Workday (hr/day) | 4.1 | 8.4 | 12.5 | 11.5 |
| Weekend Day (hr/day) | 0.0 | 4.8 | 4.8 | 19.2 |
| Absence Day (hr/day) | 0.0 | 4.8 | 4.8 | 19.2 |
| Average Day[b] (hr/day) | 2.3 | 6.9 | 9.2 | 14.8 |

Source: Adapted from Nordman et al. 1996, based on percentage of time in each mode.

[a] Based on the assumption that all monitors take advantage of low power modes.

[b] To calculate the average day, an average week is assumed to consist of 4 workdays, 2 weekend days, and 1 absence day per week. Average monitor usage per day weighs each average day by the number of each day type in a week.

Using the hours per day for the three basic day types, we created an average annual day for the purposes of eventually obtaining an annual average. To calculate the average day, we assumed that a typical week of computer use in the year contains 4 workdays, 2 weekend days, and 1 absence day. By including 1 absence day in the typical week, the calculation results in 52 days annually that are days of no active computer system use, and are intended to include the following: holidays, sick days, vacations, work travel and days when computers are not needed for work or are not in use in the office.

LBNL's operating patterns do not appear to take into account whether or not a monitor is actually taking advantage of the various power savings modes. In their 1996 study, Nordman et al. found that only one-third of the monitors were set up to recognize time-based indicators that power down a part of the monitor or part of the PC that sends information to the monitor. More recently, a representative of the EPA Energy Star Program estimated that approximately 90 - 95% of those monitors manufactured and sold in tandem with a PC in 1998 were pre-set up to take advantage of the multiple power consumption modes of the monitor, without any setup by the user (Fanara 1999). However, monitors are also sold individually, and no statistics were found on how many are sold that way and what percent of those are able to work with a PC's energy savings systems without assistance from the user. For the purposes of this TM, we assume that 90% of the monitors manufactured in 1998 and in use today are set up to recognize the power management signaling either from the monitor itself or from the PC to which they are connected. The lower end of the 90 - 95% range was chosen to recognize that monitors sold separately were not accounted for, and also, from an environmental impact perspective, it is conservative to assume a lower percent, which means less use of power saving features and greater energy consumption.

It should also be noted that this 90/10 split takes several assumptions into account, including but not limited to the percentage of users who alter or change their PC's and/or monitor's energy-saving settings, the percentage of users who know how to alter or change their PC's and/or monitor's energy-savings settings and the number of small-sized companies that build PC systems and whether or not they configure their systems to be able to take advantage of energy-savings settings 'out-of-the-box.' Because our confidence in this percentage split is not high, we will perform a sensitivity analysis of different percentage breakdowns of using low power modes versus not using them (50/50, 75/25, and 100/0; presented in Sect. 3.3).

This 90/10 split of using versus not using the power saving modes is implemented in the calculations by adjusting the average amount of hours per day a monitor spends in each mode for the effective life calculations (see Table 3). Thus, 10% of the value of each number in the 'Low' column of Table 3 was removed and added to the 'Full-on' value in that same row, to account for those that cannot go into a lower power-saving mode. Table 4 presents the adjusted figures for hours per day and presents the annual average values by multiplying the average day values by 365 days. The average day is calculated in Table 4 the same way it was calculated in Table 3.

**Table 4. Adjusted Office Operating Pattern[a]**

| Type of Day | Adjusted Office Operating Pattern | | | |
|---|---|---|---|---|
| | On | | | Off |
| | Full-on | Low | Total | |
| Workday (hr/day) | 4.9 | 7.6 | 12.5 | 11.5 |
| Weekend Day (hr/day) | 0.48 | 4.3 | 4.8 | 19.2 |
| Absence Day (hr/day) | 0.48 | 4.3 | 4.8 | 19.2 |
| Average Day[b] (hr/day) | 3.0 | 6.2 | 9.2 | 14.8 |
| **Annual Average (hr/yr)** | **1,095** | **2,263** | **3,358** | **5,402** |
| Percent on time spent in each mode | 33% | 67% | 100% | ----- |

[a] Values in Table 3 have been adjusted based on the assumption that 90% of monitors can take advantage of low power modes. Therefore, 10% of the hours in low mode in Table 4 were added to the full-on column and subtracted from the low column in this table.
[b] To calculate the average day, an average week is assumed to consist of 4 workdays, 2 weekend days, and 1 absence day per week. Average monitor usage per day weighs each average day by the number of each day type in a week.

For the home environment operating patterns, the most relevant and complete information was found in the RECS report (EIA 1999). The survey contained data on the use of computers in the home and how many hours per week the users have their computer on, without distinguishing power mode. Table 5 reveals the information obtained from the RECS report and breaks that data down to calculate a daily average and then an annual average operating pattern (i.e., the total number of hours of on time in one year).

**Table 5. RECS Home Operating Pattern Breakdown**

| Use Frequency Category | U.S. Households with Computers (EIA 1999) | | Average Hours in Use for Each Category | Average Household Use[a] |
|---|---|---|---|---|
| | (millions of households) | (% of households) | (hours/week) | (hours/week) |
| Less than 2 hours per week | 8.2 | 23.0% | 1 | 0.2 |
| 2 to 15 hours per week | 17.4 | 48.9% | 8.5 | 4.2 |
| 16 to 40 hours per week | 6.7 | 18.8% | 28 | 5.3 |
| On all the time | 3.3 | 9.3% | 168 | 15.6 |
| Totals | 35.6 | 100.0% | ----- | 25.2 |
| Daily Average (hours per day) | | | | 3.6 |
| **Annual Average (hours per year)** | | | | **1,315** |

Note: Totals may not be additive due to independent rounding.
[a] These values are the product of the fraction of households in each category and the average hours per week in each category.

Data on the amount of time a home-environment monitor is in full-on versus a lower power mode was not provided in the RECS, nor was such data found elsewhere. Thus, lacking any other information, we have chosen to use the percentage breakdown found in the office-environment data for the home-environment data in this TM (see the bottom row of Table 4). These percentages are applied to the total 1,315 hours/year for home-environment use to estimate the amount of time in each mode. In addition, the 90/10 split of equipment that can/cannot go into lower power saving modes was applied to these values to determine the actual expected number of hours per year per mode for the home environment. In Table 6, the hours per year values for each power mode are shown. In order to determine these hours spent in each mode, the total number of hours spent on annually (1,315 hours/year) was first split by the 90/10 factor into equipment that can and cannot save energy categories. Then, the resulting 1,183 hours/year was split by the office-environment data on the percent of time spent in each mode, resulting in 390 hours annually in full-on mode and 793 hours annually in a lower power mode. The remaining 132 hours/year that cannot go into an energy saving mode, was included in the 'Full-on' row. The two values for each row are then added to obtain the total hours annually in a home environment that a monitor would spend in each power mode.

Lastly, Table 7 shows the final values obtained for the effective life calculations, as presented in this section, for hours per year per mode for office- and home-environment users.

**Table 6. Splitting the Home Operating Pattern Data into the Two Power Modes**

| Power Mode | Percent of Time in Each Mode (from office- environment data) | Time Operating in Each Mode (hours/year) | | |
|---|---|---|---|---|
| | | 90% That Can Save Energy | 10% That Cannot Save Energy | Total |
| Full-on | 33% | 390 | 132 | 522 |
| Low | 67% | 793 | 0 | 793 |
| Total | 100% | 1,183 | 132 | 1,315 |

**Table 7. Summary of Operating Patterns for Effective Life Calculations**

| User Environment | Time Operating in Each Environment (hours/year) | | |
|---|---|---|---|
| | Full-On Power Mode | Low Power Mode | Total |
| Office | 1,095 | 2,263 | 3,358 |
| Home | 522 | 793 | 1,315 |

2.2.2.3 Average Years Per Life

The third set of values required for the calculation of hours per effective life is the number of years of use in the life of a monitor. The number of years per effective life, multiplied by the operating patterns in hours per year (presented in Table 7), will result in the hours per effective life.

A monitor may be reused in multiple 'lives' before reaching its end-of-life. The end-of-life is defined as the point at which the monitor is no longer used for its intended purpose

in the physical form in which it was originally manufactured. End-of-life options include indefinite storage (in which case it is not reused after storage), de-manufacturing, recycling, or disposal. A monitor may be stored before being reused; however, this storage time will not affect our use calculations since no electricity is required to operate the monitor during this storage. After its first life as used by the original owner, a monitor might be used by different people and with different PC systems in subsequent lives.

For data on the number of years of use that are in a monitor's lifetime, several sources of information were reviewed. Two particular studies provided relevant data on the number of years per life (Matthews et al. 1997, NSC 1999). A study by Matthews et al. (1997), which was an update to a study originally performed in 1991, concluded that after a first life of 5 years, approximately 45% of all PC systems are reused, while the remaining 55% either go directly to recycling or landfilling (10%) or are stored and then recycled or landfilled (45%). Their study only addressed PC systems as a whole and did not break down the lifetimes of individual components. Additionally, they concluded that the period over which the systems are reused is 3 years.

In a recently completed study for the National Safety Council (NSC 1999), researchers interviewed more than 30 major manufacturers and resellers of CRT computer monitors and other computer components. NSC found that a CRT monitor's first life lasts approximately 4 years, while the total lifespan is on the order of 6 - 7 years. Since the NSC study contains results that pertain specifically to monitors, and provides the most recent data, its results are used in this TM. The values that are used for calculations in this section are 4 years for the first life of use, and 2.5 years for the second and subsequent lives of use. The operating pattern for monitors in all the years over its effective life (6.5 years) are assumed to be the same as presented in Sect. 2.2.2.2 (Table 7). However, in the lives subsequent to the first life, the hours per year values are reduced by the fraction of monitors assumed to be reused. Matthews et al. (1997) estimated that 45% of PCS are reused after a first life; thus, the effective life operating pattern values in years of life after the first life are 45% of the values in the first life (which were presented in Table 7).

While the NSC data singled out CRT monitors in their lifespan estimates, they did not single out desktop LCD monitors. Their data did contain estimates of a 'Notebook PC,' which were 2 - 3 years for the first life and 1 - 2 years for the remaining lives, however, we expect that desktop LCD monitors will more closely mirror the lifetime estimates of a desktop CRT monitor than that of a notebook PC. Consequently, it was assumed that LCD desktop monitors also spend 4 years in their first life and 2.5 years in their subsequent lives. Additionally, the NSC document did not attempt to separate those computer systems or monitors that are used in an office versus a home environment. Thus, it was assumed that the same years per life are realized for office and home environments.

2.2.2.4 Summary of Effective Life Values (Hours per Life)

Data presented throughout Sect. 2.2.2 that are needed to estimate the hours per effective life, are shown in Table 8. The values for hours per year per power mode, calculated in Sect. 2.2.2.2 and presented in Table 7 are assumed to be the operating pattern throughout the first life (first four years). In the remaining lives, the annual operating hours decreases to 45% of the hours in operation during each year in the first life, with the remaining lives lasting a total of 2.5 years (see Sect. 2.2.2.3). Table 8 also presents the total hours per effective life per mode, based on percentage in office and home environments. These values are in bold in Table 8 (4,586 and 8,961 hrs per effective life) and will be used with the energy use rates per mode (presented in Sect. 2.1, Table 1), to calculate the total energy consumption per effective life for each monitor type.

**Table 8. Effective Life Values**

| User Environment | Power Mode | First Life (4 years) | | Remaining Lives (2.5 years) | | Model Totals[b] (hr/effective life) |
|---|---|---|---|---|---|---|
| | | Operating Pattern (hr/yr) | Total (hr/4 yrs) | Operating Pattern (hr/yr)[a] | Total (hrs/2.5 yrs) | |
| OFFICE (65%) | Full-on | 1,095 | 4,380 | 493 | 1,233 | 5,613 |
| | Low | 2,263 | 9,052 | 1,018 | 2,545 | 11,597 |
| HOME (35%) | Full-on | 522 | 2,088 | 235 | 588 | 2,676 |
| | Low | 793 | 3,172 | 357 | 893 | 4,065 |
| WEIGHTED AVERAGE[c] | Full-on | --- | --- | --- | --- | **4,585** |
| | Low | --- | --- | --- | --- | **8,961** |

[a] The remaining lives operating pattern is 45% of first life operating pattern, based on 45% of monitors that are reused (Matthews et al. 1997).
[b] Modal totals calculated as [(Total for first 4 years) + (Total for remaining 2.5 years)].
[c] The weighted averages shown for full-on and low power modes are based on the assumption that 65% of users operate in an office environment and 35% operate in a home environment.

## 3. PRELIMINARY RESULTS

In order to calculate the total kWhs consumed per manufactured life and effective life, values from Sects. 2.1 and 2.2 were combined as shown in Tables 9A and 9B. First, the energy use rates (kW) were multiplied by the lifespans (hours per life) for each mode and each monitor type. They were then summed for the two power modes to obtain a total kWh/life for each monitor type. In an LCA, comparisons are made based on functional equivalency. Therefore, if one monitor will operate for a longer period of time than another, as in the manufactured life scenario, overall life-cycle impacts should be based on an equivalent use. Thus, because the manufactured life of an LCD is 3.6 times greater than a CRT (see Sect. 2.2.1), in the final analysis, the CRT manufacturing process inventories must be multiplied by 3.6 to retain a functionally equivalent basis for the CRT and LCD monitor comparison. Since the effective life calculation is not technology-dependent, both monitor types operate for the same number of

hours in the effective life (see Table 8) and thus they are considered functionally equivalent and no modification to the overall life-cycle analysis is necessary.

**Table 9A. Manufactured Life (ML) Electricity Consumption**

| Monitor Type | Power Mode | Energy Use Rate (kW) | ML Calculated Lifespan (hours/life) | ML Energy Consumption (kWh/life) |
|---|---|---|---|---|
| 17" CRT | Full-on | 0.113 | 6,250 | 706 |
| | Low | 0.013 | 6,250 | 81 |
| | Total | ---- | 12,500 | 787 |
| 15"LCD | Full-on | 0.040 | 22,500 | 900 |
| | Low | 0.006 | 22,500 | 135 |
| | Total | ---- | 45,000 | 1,035 |

**Table 9B. Effective Life (EL) Electricity Consumption**

| Monitor Type | Power Mode | Energy Use Rate (kW) | EL Calculated Lifespan (hours/life) | EL Energy Consumption (kWh/life) |
|---|---|---|---|---|
| 17" CRT | Full-on | 0.113 | 4,585 | 518 |
| | Low | 0.013 | 8,961 | 116 |
| | Total | ---- | 13,547 | 634 |
| 15"LCD | Full-on | 0.040 | 4,585 | 183 |
| | Low | 0.006 | 8,961 | 54 |
| | Total | ---- | 13,547 | 237 |

## 3.1 Comparing Lifespans: Manufactured Life to Effective Life

Since the energy use rates are the same across both lifespan scenarios for CRTs and LCDs, we can compare the calculated lifespans of the manufactured and effective lives (hours per life). For the CRT monitor, the manufactured life total hours are 12,500 versus the effective life total of 13,547. While this does seem to suggest that a CRT can be used longer than is physically possible, what this brings out is the lower confidence we have in these numbers and some of their supporting values, with less confidence in the manufactured life data. Assumptions were required several times that could bias these numbers in either direction, however it is thought that most likely the manufactured life estimate is low based on the other estimates for the overall CRT monitor (see Attachment A, Table A2). However, there was no sound basis for assuming a lower value and thus the above hours per life values were used. It should also be stated that while these numbers are different, they are within an 8% error range of one another, and can be taken to be a near 1:1 ratio, indicating a similar potential lifespan.

For LCDs, the comparison across lifespan scenarios looks more like what one would expect, with the manufactured life value of 45,000 hours per life being much greater than the effective life value of 13,547 hours per life. The effective life value reflects the assumption that a user's use habits are not technology-dependent, and would seem to reveal that LCDs are not being used as long as they can physically be (less than a third as long).

The difference between the manufactured and effective lives are important when evaluating all the life-cycle stages for a particular monitor type. If the manufactured life is significantly greater than the effective life, the use stage will have greater impacts, as compared to other life-cycle stages. Therefore, it is important to focus on the lifetime scenario that is most realistic, while still recognizing the potential impacts from another feasible lifespan scenario.

In the final LCA for this project, we will use the effective life as the primary basis for the use stage inventory due to the fact that the effective life data are attempting to obtain a more realistic value for kWhs consumed per lifetime, and that we currently have greater confidence in those data versus the manufactured life data. The manufactured life data will be used to discuss potential differences in the use stage impacts based on this alternative lifetime scenario.

## 3.2 Sensitivity Analysis

Finally, in an effort to provide some sensitivity analysis to the final values, the assumption used in the effective life calculation that 10% of the computers manufactured in 1998 and currently in use are not able to take advantage of lower power-saving modes (a 90/10 split) was adjusted to three different splits, with all the other assumptions and calculations kept unchanged (50/50, 75/25 and 100/0, respectively in each case those that are able to go into power saving modes and those that are not). Table 10 presents the results of the sensitivity analysis for each of the four power-saving functionality scenarios.

**Table 10. Sensitivity Analysis of Effective Life Results**

| Monitor Type | Power Mode | | % that Can / % that Cannot Take Advantage of Power-Saving Features | | | |
|---|---|---|---|---|---|---|
| | | | 50/50 | 75/25 | **90/10** | 100/0 |
| 17" CRT | Full-on | (kWh/life) | 969 | 689 | **518** | 408 |
| | Low | | 64 | 97 | **116** | 129 |
| | Total | | 1,033 | 786 | **634** | 537 |
| 15" LCD | Full-on | (kWh/life) | 343 | 244 | **183** | 145 |
| | Low | | 30 | 45 | **54** | 60 |
| | Total | | 373 | 289 | **237** | 205 |

The data in Table 10 reveal that the final electrical energy consumption values for the CRT would increase by 63% with a 50/50 split and decrease by 15% with a 100/0 split (from the 90/10 split assumption). Similarly for the LCD, the results would increase by 57% or decrease by 14%. Varying the use of power-saving features results in variations in the total amount of energy consumed for LCDs and CRTs, but does not vary the ratio of LCD to CRT energy use. Therefore, these variations will affect the magnitude of the use stage impacts for effective life scenarios when compared to other life-cycle stages, but will not affect the comparison of LCD to CRT. Additional sensitivity analyses are available in Socolof et al. (2000).

## 4. DATA SOURCES AND QUALITY

Source and quality information for the data utilized in this TM are detailed in Table 11. Four categories of data quality ratings were assigned: excellent, average, poor, and unknown. In general, data assigned higher quality ratings were directly measured and represent 1998 data. As data required more calculation or estimation, or were found from a previous year, the data quality rating was reduced.

In general, the overall level of data quality is between average and excellent. However, a distinct difference can be seen in the average data quality ratings given to manufactured life data (average) and the effective life data (excellent). This infers that greater confidence can be placed in the effective life data than in the manufactured life data. Additionally, the energy use rate data appears to be of average.

## Table 11. Data Sources and Quality Information for the Use Life-Span Stage TM

| Data | Data Source/References | Data Source Comments | Data Quality [a] | Data Quality Explanation |
|---|---|---|---|---|
| **ENERGY USE RATE** | | | | |
| Various monitor manufacturer's energy use rate data | Web sites in most cases; E-mail from manufacturer in remaining cases. | It was assumed that the data provided by manufacturers on the Web sites were high-quality data in that the data should be measured and directly applicable to the equipment for which the information is provided. However, the search for information did not separate information obtained by performance level of the monitors. | Average | It was not possible to determine in what year each individual monitor was manufactured; however, it is assumed that each monitor is on the order of several months to 2 years old when promoted for sale. Thus it is estimated that the average date of the information obtained is probably relative to approximately 1997. Adding that the data was not sorted by performance level, this data was given a data quality rating of Average. |
| **MANUFACTURED LIFE (Only those sources utilized to derive values are discussed here.)** | | | | |
| Discussion of CRT lifespan | McConnaughey 1999 | Professional opinion provides good insights into potential ranges for certain components, however is still an opinion and not scientific data. | Average | As a computer manufacturing company employee, it is expected that they are a quality source of information on this topic; however, information is still an opinion and not scientific data, thus an Average data quality rating was assigned. |
| Discussion of CRT and LCD lifespans | Douglas 1999 | See above comment. | Average | See above comment. |
| Discussion of LCD lifespan | Ritsko 1999 | See above comment. | Average | See above comment. |
| Discussion of LCD lifespan | Tsuda 1999 | See above comment. | Average | See above comment. |
| Discussion of CRT and LCD lifespans | Young 1999 | See above comment. | Average | As the leader of a group that closely follows the trends in the LCD market and produces monthly reports on technology and market trends, it is expected that they are a quality source of information on this topic, however, information is still an opinion and not scientific data, thus an Average data quality rating was used. |
| 17" CRT monitor specifications sheet | VP150 1998 | As technical data on one specific CRT monitor the information is expected to be at least testing quality data or better. | Excellent | As direct manufacturer information applicable to 1998, this data is given an Excellent data quality rating. |

## Table 11. Data Sources and Quality Information for the Use Life-Span Stage TM

| Data | Data Source/References | Data Source Comments | Data Quality [a] | Data Quality Explanation |
|---|---|---|---|---|
| **EFFECTIVE LIFE** | | | | |
| Number of PCS in use in the U.S. | CIA 1997 | Authors have much experience in obtaining and collecting computer statistics in U.S. and other countries; have been publishing this book since 1986. | Excellent | From review of the available information on the authors and data sources for the data that go into the Computer Industry Almanac, the data quality rating of Excellent is given. Even though data is from 1996, the authors used that data and recent trends information to predict 1997 values, and it is expected that the 1997 values are not significantly different than the 1998 values. |
| Percent of PCS in the home that are used in an office-like environment | RECS 1999 | "The Residential Energy Consumption Survey provides national...information about U.S. households and their energy usage. The 1997 survey collected data from a statistically selected sample of 5,902 households that were interviewed in their homes." | Excellent | While these data are 1997 data, it is assumed that the energy usage patterns of home dwellers has not changed significantly between 1997 and 1998. |
| Number of PCs in use in the home | RECS 1999 | See previous comment on RECS. | Excellent | See previous comment on RECS. |
| Office PC use pattern | Nordman 1996 | Used multiple sources of previous data covering many samples of PCs, as well as their own research, to derive their equipment usage pattern. | Average | Their data was manipulated slightly to account for a greater number of affectors on typical usage patterns. By manipulating their data the data quality is slightly reduced, thus data quality rating of Average was assigned. |
| Home PC use pattern | RECS 1999 | See previous comment on RECS. | Excellent | See previous comment on RECS. |
| Number of years PCS are used in 1st life and 2nd and subsequent lives | NSC 1999 | "This study presents the results of the first large-scale survey (which covered the years 1997 and 1998) and analysis of end-of-life electronic product recycling and reuse in the U.S. Data were collected from 123 firms." | Excellent | Due to the applicable time frame and the body of companies who participated, these data were given data quality rating of Excellent. |
| Number of PCS that are used in their 2nd and subsequent lives | Matthews 1997 | Performed a study in 1991, watched as the computer market changed over 16 years, then reviewed the original study finding the weak spots there. Reperformed study in 1997 making learned changes to the analysis format and using newer data (1997). | Average | While changes were made to the second study as weaker parts of previous study were uncovered, still extrapolated individual recycling firm data to obtain some base data for their estimates. While data is primarily relative to the 1997 time frame, which is very close to our year of interest of 1998, still chose data quality rating of Average due to amount of data manipulation that was required to obtain values. |

[a] The data were assigned to one of the following four data quality categories: Excellent, Average, Poor, and Unknown.

# 5. LIMITATIONS & UNCERTAINTIES

This section is subdivided into three subsections, with each addressing the limitations and uncertainties of the energy use rate, manufactured life and effective life calculations.

## 5.1 Energy Use Rate

The energy use rates utilized in this TM were not from a systematic study of the energy use rates of all applicable monitors, only those for which information was located on the World Wide Web. Also, it was difficult to pinpoint the exact date from which much of the data came (see the data quality explanation of those data in Table 11). To successfully and effectively take advantage of the data on each of the three lower power modes, it would have been necessary to have hours per life data for each of the three power modes as well as for manufactured and effective lives. No sources of data, for either lifespan, separated hours per life estimates into three distinct low power modes. While this does induce error, it is expected that averaging those categories to estimate the total amount of time that a monitor spends in all the lower power modes would only have a minor effect on the final energy use rate values. The effect of averaging these categories probably overestimates the total amount of electrical energy that is consumed during lower-power mode use. This is so because those that are left on for significant periods of time (overnight, over a two-day weekend, or over an extended stay) most likely are reaching their lowest power mode within the first 1 - 2 hours and staying there for the duration of the away time.

When this information was obtained from the World Wide Web, the data were simply separated into one of the two large categories of 17" CRT and 15" LCD desktop monitors. Thus, since it is fairly common that one type of monitor manufacturer will make several different models with varying performance characteristics with one size range, a limitation of this data is that it is not sorted by performance characteristics. Additionally, the data obtained from these Web sites are most likely maximums, and were stated as such in several cases. However, if some manufacturers did not state that the reported values were maximums, then our averages are slightly high.

## 5.2 Manufactured Life

Only a very limited amount of information was obtained with which to make the assumptions made in this TM about manufactured life. The primary uncertainties relate not only to the assumption of the MTBF lifespan of the monitors, but also to the testing duty cycle which was completely estimated. With the lack of any high quality data, the confidence in the manufactured life calculations is low.

## 5.3 Effective Life

Several assumptions were made to calculate the effective life data set. They include the following:

- 90% of monitors are able to go into lower power consumption modes;
- Atypical workplace computers (e.g., those used in hospitals and schools) balance to fit the office-like use environment established in this TM;
- Atypical (average) office use environment week consists of 4 'weekdays,' 1 'absence day' and 2 'weekend days,' where the absence day accounts for holidays, sick days, work-related travel days, vacations and days of no use of the work computer;
- The percent of time a monitor spends in full-on versus lower power modes in a home environment is the same as in an office environment;
- Used the office environment split of the total on time that equipment spends in full-on versus a lower power mode for the home environment split of total on time;
- LCD desktop monitor lifetimes are more similar to desktop CRT monitors than notebook PC displays; and
- The same number of years of use per life exist for office and home environments.

While the above assumptions do introduce error, the magnitude of the error is unknown. Some assumptions may have a greater effect on the final values than others. For example, it may be concluded that the assumption that the average office PC system usage pattern is fairly accurate, while the assumption about atypical workplace computers could potentially contain significant error in either direction of the assumed value. Table 10 showed the effects on the results from varying the use of energy saving features. If several of these assumptions are biased in the same direction (either all underestimating or overestimating the results), then the effective life results have the potential to be significantly under or overestimated.

# 6. DISCUSSION AND CONCLUSIONS

The information presented in this TM are used to calculate the environmental burdens generated during the use life-cycle stage of the monitors. That information is then compared to those burdens that occur in the other four life-cycle stages of materials extraction, materials processing, manufacturing and end-of-life. To calculate the environmental burdens from the use life-cycle stage, the results of this TM -- the values for each monitor's electrical energy consumption over its lifetime in kWhs -- are multiplied by each of the inputs and outputs from the electricity generation process.

## ACRONYMS & ABBREVIATIONS

| | |
|---|---|
| CDP | Computer Display Project |
| CRT | Cathode ray tube |
| DfE | Design for the Environment |
| DOE | Department of Energy |
| DPMS | Display Power Management Signaling |
| EIA | Energy Information Administration |
| IC | Integrated circuit |
| kW | Kilowatt |
| kWh | Kilowatthour |
| LBNL | Lawrence Berkeley National Laboratory |
| LCA | Life-cycle assessment |
| LCD | Liquid crystal display |
| LCI | Life-cycle inventory |
| MTBF | Mean-time-before-failure |
| PC | Personal computer |
| RECS | Residential Energy Consumption Survey |
| TM | Technical memorandum |
| W | Watt |

## REFERENCES

Atlantic Consulting. 1998. "LCA Study, EU Ecolabels for Personal Computers." January.

CIA (Computer Industry Almanac, Inc.). 1997. Computer Industry Almanac. Arlington Heights, IL.

CCPCT (Center for Clean Products and Clean Technologies). 1999. The Calculated Averages of Energy Use Data Found from Multiple Computer Manufacturers' Web Sites.

Chan, A., *et al.* 1997. "The Role of Computers in Energy Consumption on Campus." A class research paper from The University of Toronto. Available from the Web site: http://server.esc.cquest.utoronto.ca/env/env421h/energy/computers.html.

Douglas, D. 1999. Personal communication with D. Douglas and E. Korman, Dell, and J. Overly, University of Tennessee, Center for Clean Products and Clean Technologies. March.

EIA (Energy Information Administration). 1999. 1997 Residential Energy Consumption Survey, Housing Characteristics report. Web site available at: http://www.eia.doe.gov/emeu/consumption/reports.html (under "Residential Households").

EPA (Environmental Protection Agency). 1999. Energy Star-Labeled Office Equipment with Computer Specifications. Web site available at: http://www.epa.gov/appdstar/esoe/pcsum.html.

Fanara. 1999. Personal communication with Fanara, Environmental Protection Agency (EPA) Energy Star Program, and J.G. Overly, University of Tennessee, Center for Clean Products and Clean Technologies. July.

Goldberg, L. 1998. "The Advent of "Green" Computer Design." *Computer Magazine*. September.

Goldwasser, S.M. 1999. "Notes on the Troubleshooting and Repair of Computer and Video Monitors." Web site available at: http://plop.phys.cwru.edu/repairfaq/REPAIR/F_monfaq.html.

Jung, L.B. 1999. "The Conundrum of Computer Recycling." *Resource Recycling*. May.

Koch, J. 1996. "Evaluating Environmental Performance: A Case Study in the Flat Panel Display Industry." Submitted in partial fulfillment of the requirements for the degree of Master of Science at the University of Michigan. April.

Maginnovision. 1998. Information found on a Web page from Maginnovision. Web site available at: http://www.maginnovision.com.

Matthews, H. S., *et al.* 1997. Disposition and End-of-Life Options for Personal Computers. Green Design Initiative Technical Report #97-10, Carnegie Mellon University, Pittsburgh, PA. July.

McConnaughey, M. 1999. Personal communication with M. McConnaughey, ViewSconic, and J. Overly, University of Tennessee, Center for Clean Products and Clean Technologies. March.

Miseli, J. 1999. "Hidden Cost Savings of Flat Panel Displays." Display Manufacturing Technology Conference Digest of Technical Papers, San Jose, CA. February.

NSC (National Safety Council). 1999. Electronic Product Recovery and Recycling Baseline Report: Recycling of Selected Electronic Products in the United States, Washington, D.C. May.

Nordman, Bruce, M.A. Piette and K. Kinney. 1996. Measured Energy Savings and Performance of Power-Managed Personal Computers and Monitors. Presented at the American Council for an Energy Efficient Economy Summer Study, Pacific Grove, CA, LBL-38057, UC-1600. August.

Philips. 1998. c1995 Typhon 19" high resolution digital autoscan monitor (CRT) fact page. Web site available at: http://www.fimi.philips.com/product/graphic/c1995.html.

Planetmac. 1999. Information found on a Web page from PlanetMac. Web site available at: http://planetmac.com/Frames/catalog/monitors/gdm1962.html.

Ritsko, J. 1999. Personal communication with J. Ritsko, FPD Technologies, IBM, and J. Overly, University of Tennessee, Center for Clean Products and Clean Technologies. March.

Socolof, M.L., J.G. Overly, L.E. Kincaid, D. Singh and K.M. Hart. 2000. "Preliminary Life-Cycle Assessment Results for the Design for the Environment Computer Display Project." Institute of Electrical and Electronics Engineers (IEEE) International Symposium on Electronics and the Environment, San Francisco, CA. May.

Tekawa, M., S. Miyamoto and A. Inaba. 1997. "Life Cycle Assessment: An Approach to Environmental Friendly PCs." Institute of Electrical and Electronics Engineers (IEEE) International Symposium on Electronics and the Environment, San Francisco, CA. May.

Tsuda, D. 1999. Personal communication with D. Tsuda, Apple Computer, and J. Overly, University of Tennessee, Center for Clean Products and Clean Technologies. July.

Young, R. 1999. Personal communication with R.Young, Display Search, and J. Overly, University of Tennessee, Center for Clean Products and Clean Technologies. August.

VP150. 1998. Viewsonic VP150 17" monitor specifications sheet.

# Attachment A to Appendix H
# Supporting Tables

this page intentionally left blank

## Table A-1. CRT & LCD Monitor Energy Consumption Values

| CRTs | Company | Model | Size (inches) | VIS [a] (inches) | Energy Consumption (watts) | | | | | | | | Comments/Assumptions |
|---|---|---|---|---|---|---|---|---|---|---|---|---|---|
| | | | | | | Full-on | | Standby [b] | | Suspend | | Act. Off | |
| | Apple | Color Sync | 17.0 | 16.1 | < | 125 | < | 60 | | | < | 5 | |
| | | Multiple Scan 720 | 17.0 | 16.0 | < | 120 | | | | | < | 5 | |
| | Compaq (& Digital) | V75 | 17.0 | 16.0 | < | 115 | | | | | | | |
| | | P75 | 17.0 | 16.0 | < | 115 | | | | | | | |
| | | 71C | 17.0 | 15.7 | < | 110 | < | 15 | < | 15 | < | 8 | |
| | | 71P | 17.0 | 16.0 | < | 120 | < | 15 | < | 15 | < | 8 | |
| | EIZO | FlexScan TX-C7 | 17.0 | 15.8 | | 140 | < | 12 | | | < | 5 | |
| | | FlexScan FX-C5 | 17.0 | 15.6 | | 95 | < | 10 | | | < | 5 | |
| | Hitachi | SuperScan Elite 641 | 17.0 | 15.9 | < | 135 | < | 15 | | | < | 8 | |
| | | SuperScan Pro 620 | 17.0 | 15.9 | < | 115 | < | 15 | | | < | 8 | |
| | LG | Studioworks 74i | 17.0 | 16.0 | | 100 | | 15 | | | | 8 | |
| | | 77M | 17.0 | 15.9 | < | 130 | | | | | | 5 | |
| | MAG | XJ707 | 17.0 | | < | 120 | < | 15 | < | 15 | < | 8 | |
| | | XJ717 | 17.0 | | < | 120 | < | 10 | < | 10 | < | 5 | |
| | | XJ700T | 17.0 | | < | 120 | < | 15 | < | 15 | < | 5 | |
| | | DJ707 AV | 17.0 | | < | 120 | < | 15 | < | 15 | < | 8 | |
| | Mitsubishi | Diamond 87TXM | 17.0 | 16.0 | | 120 | < | 100 | < | 15 | < | 8 | Due to the significant difference in the Mitsubishi "Standby" power mode category values and those supplied by other manufacturers, these values were omitted from the average "Standby" power mode calculation. |
| | | Diamond Pro 700 | 17.0 | 16.0 | | 110 | < | 95 | < | 15 | | | |
| | | Diamond Plus 72 | 17.0 | 16.0 | | 105 | < | 90 | < | 15 | | | |
| | | Diamond Plus 70 | 17.0 | 16.0 | | 95 | < | 80 | < | 15 | | | |
| | NEC | Multisyne A700 | 17.0 | 15.6 | | 85 | | | | | < | 8 | NEC representative contacted through support phone number stated that the energy saver mode power consumption is usually rated at 8 watts or less for all monitors. Due to range similarities, assumed that this rating falls into the 'Active Off' power mode consumption category. |
| | | Multisync E700 | 17.0 | 15.6 | | 95 | | | | | < | 8 | |
| | | Multisync M700 | 17.0 | 15.6 | | 120 | | | | | < | 8 | |
| | | Multisync P750 | 17.0 | 15.6 | | 125 | | | | | < | 8 | |
| | Panasonic | PanaSync S17 | 17.0 | 16.0 | | 110 | < | 15 | < | 15 | < | 8 | The company Web site stated "typical" or "nominal" for the associated power consumption values. |
| | | PanaMedia PM17 | 17.0 | 16.0 | | 130 | < | 20 | < | 20 | < | 8 | |
| | Philips | 107S | 17.0 | 15.9 | | 80 | | | | | < | 5 | |
| | | 107MB | 17.0 | 15.9 | | 85 | | | | | < | 5 | |
| | | 107B | 17.0 | 16.0 | | 85 | | | | | < | 5 | |
| | Sony | CPD-200ES | 17.0 | 16.0 | < | 120 | < | 15 | | | < | 8 | |
| | | CPD-200GS | 17.0 | 16.0 | < | 120 | < | 15 | | | < | 8 | |
| | Toshiba | TekBright 700P | 17.0 | 15.8 | | 100 | | | | | | | Web site indicated 110 watts maximum, 100 watts nominal. |
| | Viewsonic | PT775 | 17.0 | 16.0 | | 130 | | | | | | | The company Web site stated "typical" or "nominal" for the associated power consumption values. |
| | | EA771B | 17.0 | 16.0 | | 130 | | | | | | | |
| | | G773 | 17.0 | 16.0 | < | 110 | | | | | | | |
| | | | | CRT Averages: | | 113.00 | | 17.31 | | 15.00 | | 6.85 | |
| | | | | Standard deviations: | | 15.35 | | 11.61 | | 2.13 | | 1.49 | |
| | | | | CRT Standby, Suspend and Active Off average: | | | | 13.05 | | | | | |
| | | | | Standard deviation: | | | | 5.08 | | | | | |

## Table A1. CRT & LCD Monitor Energy Consumption Values (continued)

| LCDs | Company | Model | Size/VIS [a] (inches) | Energy Consumption (watts) | | | | | | | | Comments/Assumptions |
|---|---|---|---|---|---|---|---|---|---|---|---|---|
| | | | | | Full-on | | Standby [b] | | Suspend | | Act. Off | |
| | Apple | Studio Display | 15.1 | < | 35 | | 10 | | | | 8 | |
| | Batron | FM-17TX11 | 15.0 | | 35 | | | | | | | |
| | Compaq | TFT500 | 15.0 | < | 50 | | | | | | | |
| | Digital | 51P | 15.0 | | 40 | | 8 | | | | 8 | Received data through phone support (800.354.9000). |
| | EIZO | FlexScan L34 | 15.0 | | 30 | < | 15 | | | < | 5 | |
| | LG | 500LC | 15.1 | | 40 | | 5 | | | | 5 | |
| | Mitsubishi | LCD50 | 15.0 | | 45 | | 8 | | | | 8 | |
| | NEC | LCD1510 | 15.0 | | 50 | | 8 | | | | | |
| | Samsung | 500TFT | 15.0 | < | 45 | | | | | < | 5 | Received data via E-mail. The Samsung E-mail received stated that in full power on mode, the power consumption was a maximum of 45 watts and a nominal of 36 watts. |
| | Sharp | Super-V | 15.0 | | 36 | | | | | | 2 | |
| | Sony | CDP-L150 | 15.0 | < | 35 | < | 4 | | | < | 4 | |
| | Viewsonic | VP150 | 15.0 | | 35 | | 2.6 | | | | 2.6 | Received data via E-mail. Full-on category value noted as "typical." |
| | | | LCD Averages: | | 39.67 | | 7.58 | | | | 5.29 | |
| | | | Standard deviations: | | 6.50 | | 3.89 | | | | 2.29 | |
| | | | LCD Standby, Suspend and Active Off average: | | | | 6.44 | | | | | |
| | | | Standard deviation: | | | | 3.09 | | | | | |

[a] VIS = Viewable Image Size.
[b] The 'Standby' energy consumption category includes listings noted as "Power Save Mode 1."

Notes: The energy consumption data shown in this table were taken from the Web sites of the retailers during 1998 unless otherwise noted. The energy consumption ratings for these monitors showed various information. Sometimes the less than (<) symbol preceeded some or all values, sometimes the addendum note 'maximum' was included and sometimes only the values themselves were reported.

## Table A2. CRT and LCD Monitor MTBF Values & Manufactured Life Comments

| MTBF Values for the: | | | Source | Comments from Sources |
|---|---|---|---|---|
| CRT Monitor | CRT Only | LCD Monitor | | |
| (thousand hours) | | | | |
| 30-60 | 10-15 | | Goldwasser 1999 | - "Most manufacturers will quote an MTBF of somewhere in the 30,000 to 60,000 hour range, EXCLUSIVE of the CRT. The typical CRT, without an extended-life cathode, is usually good for 10,000 to 15,000 hours before it reaches half its initial brightness."<br>- "CRT Life: The life of a monitor is determined by the life of the CRT. The CRT is by far the most expensive single part and it is usually not worth repairing a monitor in which the CRT requires replacement. The brightness half-life of<br>a CRT is usually about 10-15k hours of on time independent of what is being displayed on the screen."<br>- "In a CRT monitor, the shortest-lived component BY FAR is the CRT itself, and it ages (more properly, the cathode is aging) as long as the heater is on and the tube is under bias (i.e., receiving voltage). Most monitors don't get around to turning the heater down or off until they enter the Display Power Management Signaling (DPMS) "suspend" or "off" modes. (And no, screen-savers do NOT help here - the tube is still on and the cathode is aging.)<br>- "In a CRT display, the CRT itself is usually the limiting factor in this (life), and in THAT specific case we usually<br>speak of "mean time to half-bright" instead, since it's rare for a CRT to simply die once it's past its early operating life. Mean-time-to-half-bright is just what it says: how long, on average, can you operate the tube before the brightness<br>drops to half its initial level for a given set of operating conditions. (Brightness is ALWAYS slow(ly) decreasing throughout the tube's life, due to the aging of the cathode and the phosphor.) For most tubes with standard cathodes, this will be in the neighborhood of 10,000-15,000 hours." |
| 50-100 | | | McConnaughey 1999 | Mr. McConnaughey stated that each of the subsystems of a monitor has different components that must meet different MTBF (Mean Time Before Failure) testing. Before testing, manufacturers typically calculate what the expected MTBF should be, and then test it to obtain the demonstrated MTBF. A rule of thumb is 50,000 hours calculated and over 100,000 hours demonstrated. |
| 75 | | | Philips 1998 | "MTBF: >75,000 h (according to MIL-HDBK 217E) at 25 degrees Celsius (excl. CRT)" |
| 50 | | | Maginnovision 1998 | "The average MTBF (Mean Time Before Failure) for MAG InnoVision monitors is 50,000 hours, excluding the CRT." |
| 86 | | | PlanetMac 1999 | Mean Time Before Failure = 86,000 hours. |
| 80 | 10-15 | (50-backlights) | Douglas 1999 | Phone conversation with David Douglas at Dell in Texas. David took plenty of time to discuss MTBF, and relayed that while Dell requires suppliers of CRT components (EXCLUDING THE CRT) to meet a MTBF specification of 80,000 hours, Dell performs testing (a type of 'demonstrated' MTBF - is a torture test) that typically yields at least twice the specification value in total time the equipment can operate. With that said, David then agreed that the CRT is the component that determines a CRT-based monitor's lifetime and that it is rare that a CRT lasts anywhere near that long, with most failing in the 10,000-15,000 hours/life range. David noted that CRT semiconductors are the next component that can fail. In LCDs, components containing silicon are most likely to fail first, with most manufacturers quoting backlights that will last 50,000 hours. |
| | | | Koch 1996 | Didn't supply any other data other than that they assumed 10,000 hours as the lifespan of the LCD monitor. |

## Table A2. CRT and LCD Monitor MTBF Values & Manufactured Life Comments

| MTBF Values for the: | | | Source | Comments from Sources |
|---|---|---|---|---|
| CRT Monitor | CRT Only | LCD Monitor | | |
| (thousand hours) | | | | |
| | | 50: 15 for backlights | Tsuda 1999 | Mr. Tsuda (Apple Computers) stated that the specs don't typically change for different size LCD monitors for specific components. MTBFs for flat panel displays are about 50,000 hours, except for the backlights which have MTBFs of about 15,000 hours. Most components can be fixed or replaced easily by trained technicians. Testing they perform is with maximum brightness, full white pattern; worst pattern for LCD is 1 pixel On/1 pixel Off. |
| | | 40 | Young 1999 | Through a conversation with Ross Young, Ross spoke of a note a gentlemen had sent him wherein they assumed a useful life for an LCD of 84 months and a CRT of 36 months. Additionally, it was noted that an LCD panel was assumed to have a life of around 40,000 hours, and this could increase if DPMS screen savers were implemented. |
| | | (50-backlights) | VP150 1998 | Light Source: long life, 50,000 hrs. (typ) |
| | | (10-40 - silicon driver chips) | Ritsko 1999 | Liquid crystals and thin-film transistors (TFTs) don't typically wear out, yet the amorphous silicon transistors are less reliable than the single transistors. Also, the driver (silicon) chips could be an item that might show wear, however, the chips that go in FPDs are fairly typical, use low voltages and should run between 10,000 and 40,000 hours. |

References:


Douglas, D. 1999. Personal communication with David Douglas and Eric Korman of Dell. March.

Goldwasser, S.M. 1999. "Notes on the Troubleshooting and Repair of Computer and Video Monitors." Web site available at: http://plop.phys.cwru.edu/repairfaq/REPAIR/F_monfaq.html.

Koch, J. 1996. "Evaluating Environmental Performance: A Case Study in the Flat Panel Display Industry." Submitted in partial fulfillment of the requirements for the degree of Master of Science in the University of Michigan. April.

Maginnovision. 1998. Information found on a Web page from Maginnovision, available at: http://www.maginnovision.com.

McConnaughey, M. 1999. Personal communication with Mark McConnaughey, VP of Technology and Sourcing at ViewSonic. March.

Philips. 1998. c1995 Typhon 19"high resolution digital autoscan monitor (CRT) fact page. Web site available at: http://www.fimi.philips.com/product/graphic/c1995.html.

Planetmac. 1999. Information found on a Web page from PlanetMac, available at: http://planetmac.com/Frames/catalog/monitors/gdm1962.html.

Ritsko, J. 1999. Personal communication with John Ritsko, Manager, FPD Technologies at IBM. March.

Tsuda, D. 1999. Personal communication with Dani Tsuda with the Environmental Technologies and Strategies Department at Apple. July.

Young, R. 1999. Personal communication with Ross Young, founder and President of Display Search. August.

VP150. 1998. Viewsonic VP150 17" CRT monitor specifications sheet.

## Table A3. Use Stage Data Information, Estimates and Assumptions from Reviewed Sources

| Author | Operating Circumstances/Lifetime Data | | | Power Consumption rate/Power Management |
|---|---|---|---|---|
| Jung 1999 | "The estimated useful life for a PC in a business environment is only two to three years, while home computers users typically use their equipment for three to five years." | | | |
| Matthews 1997 | First research group to attempt to model the time effort factor of storage of computer equipment during the Use life-cycle stage. In doing so, came up with a breakdown of options (shown below). Additionally, after calculating the destinations and percent averages from their numbers, 26% of end-of-life equipment is landfilled after 8.06 years in use and storage (and possible reuse), and 74% is recycled after 8.49 years in use, storage and possible reuse. | | | |
| | Initial lifetime of PCs: 5 years | % at end of 1st life reused: | 45% | |
| | | % at end of 1st life recycled: | 5% | |
| | | % at end of 1st life stockpiled: | 45% | |
| | | % at end of 1st life landfilled: | 5% | |
| | Lifetime of reused PC: 3 years | % reused recycled: | 40% | |
| | | % reused stockpiled: | 50% | |
| | | % reused landfilled: | 10% | |
| | Lifetime of stockpiled PC: 3 years | % stored recycled: | 75% | |
| | | % stored landfilled: | 25% | |
| | Calculating through the above numbers for 100 computers reveals the following breakdown: | (# out of 100) | (time) | |
| | Landfilled after 5 years | 5 | 25 | |
| | Landfilled after 8 years | 15.5 | 124 | |
| | Landfilled after 11 years | 5.5 | 60.5 | |
| | Landfilled totals | 26 | 209.5 | |
| | | Average numbers of years to landfilling of PC: | 8.06 | |
| | Recycled after 5 years | 5 | 25 | |
| | Recycled after 8 years | 52 | 416 | |
| | Recycled after 11 years | 17 | 187 | |
| | Recycled totals | 74 | 628 | |
| | | Average number of years to recycling of PC: | 8.49 | |
| NSC 1999 | "The lifespan estimates used in this study were developed through interviews with more than 30 major manufacturers and resellers. Major computer manufacturers were consulted to determine the lifespan of electronic equipment. Because manufacturers know when their products were fabricated and many also have recycling facilities, these firms are qualified to make an educated lifespan estimate. Resellers and nonprofit organizations were asked to estimate the reusable life or 'second life' by product and processor type. These inputs were used to develop estimates of the first life (the amount of time a product is useful to its original owner) and the total lifespan (period from manufacturers to disposal) for each electronic product." | | | |
| | | First life | Total life | |
| | CRT computer | 4 | 6-7 | |
| | Notebook PC | 2-3 | 4 | |

## Table A3. Use Stage Data Information, Estimates and Assumptions from Reviewed Sources

| Author | Operating Circumstances/Lifetime Data | | | Power Consumption rate/Power Management |
|---|---|---|---|---|
| Chan 1997 | This class report from a University of Toronto group of 4 people contains several worthwhile pieces of information. The data presented comprise responses from 180 people (130 administrative, teaching and research staff and 50 residents). Class covered 1996/1997; data were gathered during the class. | | | |
| | Hours of computer use by staff | < 4 hrs/dy | 7% | |
| | | 5-8 hrs/dy | 52% | |
| | | 9 or > hrs/dy | 41% | |
| | Percentage of computers with energy-saving features installed or activated | have features | 52% | |
| | | no knowledge of features | 35% | |
| | | don't have features installed or activated | 13% | |
| | Respondents who update their knowledge of computer energy-saving features | do not | 75% | |
| | | do | 19% | |
| | | no response | 6% | |
| | Idling time of office and residential computers that are turned on | less than 2 hrs | 66% | |
| | | 3-5 hrs. | 22% | |
| | | 6 hrs or more | 12% | |
| | Respondents who turn off their computer when they are away for a period (period is 45 min. or longer) | never do | 70% | |
| | | sometimes do | 21% | |
| | | always do | 7% | |
| | | no control | 25% | |
| | Staff who shut down their computers at the end of the day | always | 70% | |
| | | sometimes | 9% | |
| | | never | 19% | |
| | | no control | 2% | |
| | Percent of office computers left on during weekends | always | 22% | |
| | | sometimes | 8% | |
| | | never | 67% | |
| | | no control/no response | 3% | |
| EIA 1997 | The EIA's results from the Residential Energy Consumption Survey (RECS) provides some good data on home | | | |
| | Hours PC turned on each week | less than 2 hrs | 8.2 | |
| | | 2 to 15 hrs | 17.4 | |
| | | 16 to 40 hrs | 6.7 | |
| | | On all the time | 3.3 | |
| | How PC is used | 15 hrs a week or less | 26.5 | |
| | | 16 hrs a week or more | 10.0 | |
| | | Personal use only | 4.8 | |

## Table A3. Use Stage Data Information, Estimates and Assumptions from Reviewed Sources

| Author | Operating Circumstances/Lifetime Data | | | Power Consumption rate/Power Management |
|---|---|---|---|---|
| | | Business use only | 2.1 | |
| | | Used for both | 3.1 | |
| | Additionally, RECS calculated that lion computers were in use in U.S. households in 1997. Other data from the RECS included "6% of the households that used PCs used that computer to tele-commute." | | | |
| CIA 1998 | Estimate that 117 million computers were in use in the U.S. in 1997. | | | |
| EPA 1999 | Have the EnergyStar compliance monitor specifications. | | | |
| | | First low-power mode | Second | |
| | Low-power state: | < = 15 watts | < =8W | |
| | Default times: | 15-30 minutes | < 70 min. | |
| Koch 1997 | Assumed 10,000 hours/lifetime for the LCDs in the study. | | | |
| Goldberg 1998 | Article reported that Walt Rosenberg, Compaq's director of environmental affairs, stated that today's machines have a useful life of two-to-three years. | | | |
| Miseli 1999 | Did not separate office from home user. Assumed units operate 50% of the time (annually) around the clock. Stated that "True life of a CRT or LCD is defined for the case when it runs continually at full intensity," adding that true life for CRT is about 1.25 years and for LCD is about 2.9 years. Doubled each of those true life values for his calculations. | | | Assumed 90W for a CRT and 30W for an LCD. |
| Tekawa 1997 | Assumed personal users time frame of 2 hr/dy, 365 dy/yr for 5 years, and office users time frame of 8 hr/dy, 247 dy/yr for 7 years. Assumed a ratio of personal to office user of 4.6. | | | Don't state the actual numbers they used, but do say they took the mean of the minimum and maximum power consumption ratings. |
| Atlantic 1998 | They estimated that a PC's lifetime is 3 years. Then they stated that they were modeling only the first lifetime of a PC; they acknowledged other lifetimes but decided not to attempt to model them. They also estimated that the PC is turned on 8 hrs per day, 230 days per yr, altogether running for 5,520 hrs during its lifetime. | | | They assumed that the monitor consumes power at a rate of 100W, and that the "base case PC has no energy savings facilities." |
| Philips 1998 | MTBF of 75,000 hrs for a 19" C1995 Typhoon high resolution CRT monitor excluding the CRT. | | | Power consumption: 120W typ. (140 W max) |
| Nordman 1996 | In this document, Lawrence Berkley National Laboratory (LBNL) details results from several audits they performed determining the state of power consumption and power management in certain computers and monitors | | | The LBNL document provided results from a audit of 70 monitors and their setup and use of energy saving power modes. Their primary conclusions were that only approximately one-third of all monitors were "accomplishing power management." The following is a breakdown of some of what they found: |
| | Standard % of time in each mode by day type, by operating pattern | Full-on | Low | - 34 apparently meet Energy Star requirements |
| | Workday | 17% | 35% | - 30 were 'universal,' (able to initiate power mgmt two ways) |
| | Weekend day | 0% | 20% | - 30 were left on at time of audit (12 in suspend mode) |
| | Absence day | 0% | 20% | |
| | Weekdays average | 13% | 45% | |
| | All days average | 10% | 35% | |
| | | | | This document also contained data on the actual power consumed by 3-17" monitors over a 4-6 week period, broken down by power consumption mode, and the results are shown below: |
| | | | | Monitor #1: Full-on = 91 watts; Low = 7 watts |
| | | | | Monitor #2: Full-on = 84 watts; Low = 3 watts |
| | | | | Monitor #3: Full-on= 85 watts; Low = 4 watts |

## Table A3. Use Stage Data Information, Estimates and Assumptions from Reviewed Sources

| Author | Operating Circumstances/Lifetime Data | Power Consumption rate/Power Management | | |
|---|---|---|---|---|
| CCPCT 1998 | | The University of Tennessee CCPCT reviewed the available CRT and LCD energy consumption information (mostly via the WWW) and produced the energy consumption breakdown shown at left by energy consuming state. The units are all watts. | | |
| | | CRT | Full-on: | 113.29 |
| | | | Standby: | 17.18 |
| | | | Active off: | 6.85 |
| | | LCD | Full-on: | 40.00 |
| | | | Standby: | 7.58 |
| | | | Active-off: | 5.70 |

References (not listed in the main References list):


Atlantic Consulting. 1998. "LCA study, EU Ecolables for Personal Computers." January.

CCPCT (Center for Clean Products and Clean Technologies). 1999. Calculated averages of energy use data found from multiple computer manufacturers's Web sites.

Chan, A., et al. 1997. "The role of Computers in Energy Consumption on Campus." A class research paper from the University of Toronto. Obtained copy from the Internet at: http://server.esc.cquest.utoronto.ca/env/env421h/energy/computers.html.

EPA (Environmental Protection Agency). 1999. Energy Star-labeled office equipment with computer specifications. Web site available at: http://www.epa.gov/appdstar/esoe/pcsum.html.

Goldberg, L. 1998. "The Advent of "Green" Computer Design." *Computer Magazine*. September.

Jung, L.B. 1999. "The Conundrum of Computer Recycling." *Resource Recycling*. May.

Koch, J. 1996. "Evaluating Environmental Performance: A Case Study in the Flat Panel Display Industry." Submitted in partial fulfillment of the requirements for the degree of Master of Science in the University of Michigan. April.

Matthews, H.S., et al. 1997. "Disposition and End-of-Life Options for Personal Computers." Report available online from: http://www.ce.cmu.edu/GreenDesign/comprec/index.html. June.

Miseli, J. 1999. "Hidden Cost Savings of Flat Panel Displays." Display Manufacturing Technology Conference Digest of Technical Papers, San Jose, CA. February.

Philips. 1998. c1995 Typhon 19" high resolution digital autoscan monitor (CRT) fact page. Web site available at: http://www/fimi/philips.com/product/graphic/c1995.html.

Tekawa, M., S. Miyamoto and A. Inaba. 1997. "Life Cycle Assessment, An Approach to Environmentally Friendly PCs." Institute of Electrical and Electronics Engineers (IEEE) International Symposium on Electronics and the Environment. San Francisco, CA. May.

# APPENDIX I

## TECHNICAL MEMORANDUM:
## End-of-Life Approach for the DfE Computer Display Project

this page intentionally left blank

# APPENDIX I

## TECHNICAL MEMORANDUM:
## End-of-Life Approach for the DfE Computer Display Project

## I. INTRODUCTION

The Computer Display Project, sponsored by the U.S. Environmental Protection Agency (EPA) as part of its Design for the Environment (DfE) program, is investigating the life-cycle impacts of cathode ray tube (CRT) displays and liquid crystal displays (LCDs) for use in desktop computers.

A meaningful comparison of the two technologies from the environmental perspective can be made only if the life-cycle impacts associated with various stages, namely, raw material extraction, materials processing, manufacture, use, and end-of-life (EOL), are evaluated. The functional units being compared are the 17-inch CRT display monitor and the 15-inch active matrix liquid crystal display (AMLCD) monitor. The two are considered to be functionally equivalent with respect to the viewing area available to the user. EOL issues are of growing interest to manufacturers nowadays due to Extended Producer Responsibility (EPR) concerns (Fishbein 1998) and the consequent higher expectations from manufacturers for influencing the ultimate fate of their products.

The purpose of this memorandum is to describe the approach for evaluating the EOL life-cycle stages of CRTs and AMLCDs for the Computer Display Project. This approach includes:

(1) developing scenarios to represent reasonable EOL alternatives; and
(2) collecting life-cycle inventory (LCI) data for the EOL alternatives.

### 1.1 Background

Estimates from 1998 revealed that more than 20 million personal computer central processing units (CPU) became obsolete in that year (NSC 1999). Earlier estimates indicated that approximately 10 million television sets and 12 million computer monitors reach the end of their useful lives each year (MCC 1996). Assuming that one monitor became obsolete for every CPU in 1998, and since LCDs have not been in existence long enough to have attained "end-of-life" (EOL) status in sufficiently large numbers, it is expected that approximately 20 million CRTs are retired annually. There is not much information available on the disposition options for LCDs.

The major existing EOL environmental concern associated with CRTs is disposal of leaded glass. LCDs, on the other hand, do not contain any leaded glass and are much lighter in weight, but contain other materials of concern, such as mercury used in the backlights.

### 1.1.1 CRT EOL Issues

According to practices followed by leading CRT recyclers such as Envirocycle (Envirocycle 1999), the material of greatest value recovered from CRTs is leaded glass (which is also the major component by weight), followed by small quantities of metals. Also, whenever the incoming EOL product is a complete computer monitor, some plastics and metals can be recovered from its outer casing and other parts.

The closed loop recycling of leaded glass involves recovering and processing the material for use as cullet in the manufacture of new CRTs. CRT manufacturers will use the cullet if it meets quality standards and is of the same chemistry and type as required by them in their manufacturing operations. Thus, effective recycling of post-consumer CRT glass requires very careful sorting and separation into various types, followed by decontamination (removal of coatings). Resmelting (for lead recovery) and downcycling (into other glass applications) are some of the other "open loop recycling" alternatives. In 1997 and 1998, CRT computer monitor recycling was done for 1.3 million units (46 million pounds) and 1.5 million units (51 million pounds), respectively (NSC, 1999).

### 1.1.2 Regulations Regarding CRT Disposal

Color CRTs may fail the EPA Toxicity Characteristic Leachate Procedure (TCLP) test, and therefore may be classified as hazardous waste under current EPA regulations. Some experts believe that this classification poses barriers to the effective recycling of CRTs, on account of special permits and transportation requirements for handling hazardous waste (EPA-CSI 1999). However, EPA has implemented a glass-to-glass recycling exception.

In order to landfill CRTs in accordance with EPA regulations, they must be dismantled, and the glass crushed and stabilized by micro-encapsulation in cement. However, this method has some drawbacks. Crushing increases surface area and, consequently, the potential to leach lead. Though cement encapsulation is the required method, it has been found that cement disintegrates faster than glass (MCC 1994).

To encourage recycling, some states have developed new initiatives that will ease some of the regulatory barriers. Massachusetts, for example, has proposed to specifically exempt "intact" CRTs from being classified as hazardous waste and simultaneously banned them from disposal in municipal landfills and combustion facilities (MDEP 1999). These measures could promote the recycling of CRTs by making the process of handling and transportation much easier, and the paperwork less cumbersome.

### 1.1.3 LCD EOL Issues

Currently, no infrastructure or established process exists for recycling LCDs specifically. Of the small numbers of LCDs that have reached the EOL stage (predominantly as notebook computers), a much smaller number is likely to have reached recycling facilities. No specific details are available on the materials recovered from them as they are expected to have been processed along with other electronic products, with some valuable and/or potentially recyclable materials removed. The following components and materials of potential reuse or recycling value found in LCDs have been identified by MCC (MCC 1994):

- Thin film transistors (TFTs).
- Color filters.
- Glass.

The toxicity potential of heavy metals is of concern in the EOL stage. The heavy metals found in the LCD monitors are identified in the main body of this LCA report. This study will consider the presence of heavy metals or other materials of potential concern in the wastes and emissions generated.

## 1.2 EOL Disposition Options

In the past, landfilling has been the prevalent method for the disposition of post-use computer monitors (i.e., those re-used after being resold or donated). However, with increasing awareness of potentially harmful life-cycle environmental impacts, dwindling natural resources, government regulations against disposal of toxic substances in landfills, and the consequent development of markets for recycled components and materials, more options are now available for the disposition of post-use computer monitors. They are briefly described below.

### 1.2.1 Reuse

Reuse, often as a result of reselling, involves continued use of the monitor for the purpose for which it was built, and is considered to occur within its originally intended useful life. Reuse does not usually entail major repairs or modifications, and is a preferred EOL option because the original materials contained in it are put to use for an extended period of time, thus conserving valuable natural resources (energy and raw materials) needed to manufacture new monitors or to dispose of discarded ones. However, reuse could result in reduced energy efficiency during the use stage as monitor manufacturers continually strive to improve the energy efficiency of their products.

### 1.2.2 Remanufacturing

Remanufacturing is a viable option for monitors that are no longer functional but could be refurbished (upgraded or restored to working conditions) at a cost lower than that of manufacturing a new monitor, to be sold again in domestic or foreign markets.[1] Here again, energy and raw materials are conserved, though some new parts/components may be required. Another important benefit of remanufacturing is solid waste reduction, achieved by diverting the monitor materials away from the landfill. Remanufacturing processes span a wide range of activities, from as little as replacing button tops to as extensive as testing and replacing PCBs or transformers.

[1] In addition to cost, the arrival of new technology is another factor that inhibits remanufacturing. In such cases, remanufacturers seek to find markets where products based on old technology are still in demand.

### 1.2.3 Recycling

Recycling involves recovering the individual materials from EOL monitors, to be used in the production of new monitors (closed-loop recycling) or in other products (open-loop recycling). Identification, sorting, cleaning, and further processing (e.g., smelting) are often required before the recovered materials can be used again. Though materials recycling involves several processing steps, it results in the conservation of energy and raw materials, and diversion of materials that would otherwise have been landfilled, through the creation of new, desirable products that are in-line with current market demand.

### 1.2.4 Waste-to-Energy (WTE) Incineration

A portion of municipal solid waste (MSW) is routinely sent to incinerators or municipal waste-to-energy (WTE) facilities for energy recovery. The quantity of ash (bottom ash and fly ash) left over is a small fraction, around 25% (EPA 1998) of the original waste input, and can be disposed of either as non-hazardous or hazardous waste, depending on whether it passes the TCLP test or not. The obvious benefits are reduced solid waste and the energy produced, which is often counted as a credit in life-cycle energy calculations.[2]

### 1.2.5 Landfilling

Landfilling solid waste in Subtitle C (for hazardous) or D (for non-hazardous) landfills is the least preferred option, since all the other options have some expected environmental benefits. The disposal of waste in Subtitle C landfills is usually the most undesirable, as it often involves treatment to immobilize the hazardous materials before they can be landfilled, thus increasing the quantity and cost of disposal. Also, hazardous waste sites have the potential to turn into high liability ("Superfund") sites. Some states have regulatory activities that might not accept monitors in Subtitle D landfills.

## 2. METHODOLOGY

This section outlines key assumptions, defines conceptual models proposed for determining the flow of materials through the EOL processes, and highlights some important issues pertaining to CRTs and LCDs.

The major steps are listed below:

- Assumptions about the distribution of EOL options were made.
- Data were collected for various disposition options using existing inventory reports and inventory questionnaires sent to recyclers.
- Data were normalized to the functional unit and included as the EOL inventories.

[2] The energy used in different life-cycle stages is summed up to arrive at the total energy used in the life cycle of the product. In case of WTE incineration, where energy is recovered instead of being used up, it is treated as a negative value and subtracted from the total.

## 2.1 EOL Conceptual Models

A monitor is assumed to have reached EOL status when:

- It has served its useful life and/or is no longer functional.
- Technological obsolescence renders it unusable.

The EOL options for CRT and LCD monitors are graphically depicted in Figure 1. Estimates of the percent distribution of monitors going to each EOL option are presented below. As the functional unit in this study is one monitor over its lifetime, the percentages are used as probabilities for the EOL disposition of a particular monitor.

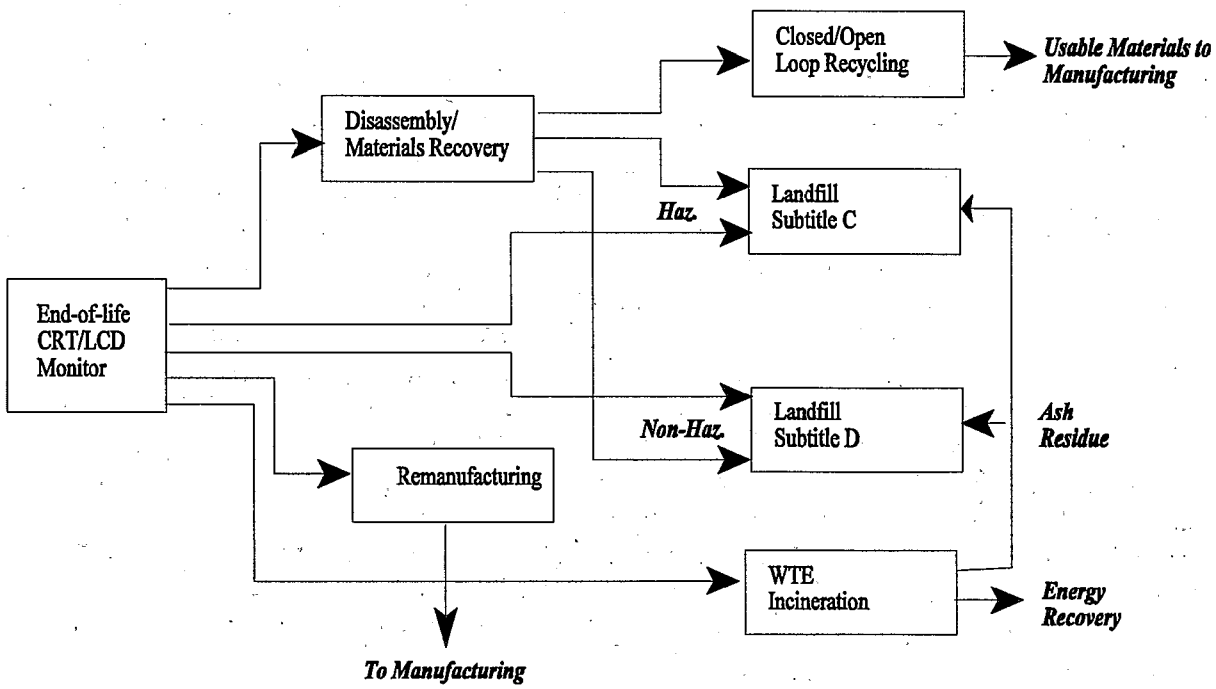


**Figure 1. Conceptual Model Showing End-of-Life Disposition Options for CRT and LCD Monitors**

### 2.2.1 CRT

The National Safety Council (NSC 1999) reported that 11% of all personal computer CPUs are recycled. Assuming one monitor is recycled with every CPU, and assuming these represent CRTs, we assume 11% of CRTs go to recycling. The NSC report also stated that 3% of personal computers are "refurbished and resold or donated." We thus used 3% as an estimate of the CRT monitors that are remanufactured, although we recognize this might be an overestimate, as we do not know if those resold and donated are also remanufactured. Given that this is a small percentage, this error is not expected to have a large effect. Further data are lacking on the percent of monitors being incinerated or going to landfills. To estimate the percent incinerated, we used the percent of all municipal solid waste in the United States being incinerated, which is estimated at 15% (EPA 1998). Summing the percents for recycling, remanufacturing, and incineration equals 29%. This leaves 71% that is assumed to be landfilled. In the life-cycle analysis in this study, only one landfilling process is modeled, which is assumed to represent both hazardous waste and solid waste landfilling. The landfilling process is derived from Ecobalance data and is a combination of four major materials in a CRT (glass, steel, plastic, and aluminum), based on the proportion of each of those materials in the CRT. The inventories for each material are of generic materials (not necessarily the precise materials in the CRT). For example, the glass is generic glass, and not leaded glass, and the plastics are generic "plastic" and may not represent the exact plastics in the CRT.

Although the percentage of monitors that are landfilled are not separated into hazardous and non-hazardous waste landfilling processes, we have still attempted to estimate the proportion of CRTs that go to each landfill. Due to a lack of data, we assumed as a best estimate that the percent of monitors that are in households are equivalent to the percent of landfilled monitors that would be disposed of in a solid waste (Subtitle D) landfill and the percent of monitors that are in businesses would be disposed of in a hazardous waste (subtitle C) landfill. As presented in the Use Stage discussion in the main body of this report (Section 2.4.1.2), 35% of monitors are in households and 65% are in office and other environments. Therefore, of the 71% of monitors assumed to going to landfills, 25% are assumed to be sent to solid waste landfills and 46% to hazardous waste landfills. To summarize, the EOL dispositions assumed for the CRT are as follows:

- Incineration: 15%
- Recycling: 11%
- Remanufacturing: 3%
- Hazardous waste landfill: 46%
- Solid waste landfill: 25%

### 2.2.1 LCD

Data were even more lacking for the EOL dispositions of LCDs. The same 15% of municipal solid waste incinerated in the United States was assumed for LCD incineration as it was for the CRT. An individual in the monitor recycling business estimated that no more than 5% of LCDs are sent to hazardous waste landfills and that essentially none are currently being recycled (Vorhees 2000). Given this limited data, the remaining 80% needed to be split between

solid waste landfilling and remanufacturing. Given no other data, we assumed half of the remaining 80% goes to solid waste landfills and half to remanufacturing. Assuming that 40% are remanufactured is likely an overestimate; however, no supporting data were available to modify this estimate. Therefore, in the baseline analysis of this study, the following percentages have been used:

- Incineration: 15%
- Recycling: 15%
- Remanufacturing: 15%
- Hazardous waste landfill: 5%
- Solid waste landfill: 50%

Sensitivity analyses have been conducted to determine the effects of these assumptions on the results and are discussed in Chapters 2 (LCI) and 3 (LCIA) of the main report.

## 2.2 Assumptions

In developing the EOL model for CRT and LCD monitors, it was necessary to make several assumptions. In addition to the percent distributions presented above, the following assumptions apply to the EOL data:

- Reuse and resale are not included in the EOL scenarios modeled as these events are considered to occur within the originally intended useful life of the monitor.
- The monitors currently in storage are not considered to have reached EOL yet and have, therefore, been excluded from the EOL model. Moreover, they are assumed not to have environmental impacts while in storage, and maintenance of storage space is assumed to the beyond the scope of this study.
- Only waste-to-energy incineration is modeled because there is very limited straight incineration (without energy recovery) being done in the U.S. at present. In fact, the 1996 total U.S. WTE design capacity was 100,355 tons per day, with 110 WTE facilities in operation. In contrast, the capacity for incineration without energy recovery was only 2,451 tons per day, with a total of 19 facilities in operation. In general, WTE has become the prevalent method for MSW combustion since the 1980s (EPA 1998).

## REFERENCES

CIA (Computer Industry Almanac). 1999. Web site available: http://www.c-i-a.com/19961225.htm . April 30.

Denison, R. 1996. "Environmental Life-Cycle Comparisons of Recycling, Landfilling, and Incineration." R.A. Denison, Environmental Defense Fund.

EIA (Energy Information Administration). 1999. Web site availble: http://www.eia.doe.gov/emeu/recs/recs97/appusage.html#pcusage. April 30

Envirocycle. 1999. Web site available: http://www.enviroinc.com/. March 8.

EPA (Environmental Protection Agency). 1998. "Characterization of Municipal Solid Waste in the United States: 1997 update." U.S. EPA Office of Solid Waste, Report No. EPA530-R-98-007. Prepared by Franklin Associates. May.

EPA. 1998. "Characterization of Municipal Solid Waste in the United Sates: 1997 Update." Report No. EPA 530-R-98-007.

EPA. 1999. EPA website 4/26/99. http://www.epa.gov/ooaujeag/taskforce/issppr1.htm

EPA-CSI. 1999. U.S. EPA's CSI web pages 4/26/99. http://www.epa.gov/csi/computer/accomp6.htm

Fishbein, B.K. 1998. "EPR: What Does It Mean? Where Is It Headed?" *Pollution Prevention Review.* **8** (4): 43-55. John Wiley & Sons, Inc. October.

Laboratory Network. 1999. Web site available: http://news.laboratorynetwork.com/regulatory-news/19981211-6948.html. April 26.

MCC (Microelectronics and Computer Technology Corporation). 1994. *Electronics Industry Environmental Roadmap.* Chapter 7.

MCC. 1996. "1996 Electronics Industry Environmental Roadmap." June.

MDEP (Massachusetts Department of Environmental Protection). 1999. Web site available at: http://www.state.ma.us/dep/bwp/dswm/files/crtq&a.htm. March 12.

NSC (National Safety Council). 1999. *Electronic Product Recovery and Recycling Baseline Report: Recycling of Selected Electronic Products in the United States.* Washington, DC, National Safety Council. May.

RTI (Research Triangle Institute). 1999. Personal Communication with K. Weitz. "EOL Management Options for MSW." February.

Scott, M.H., F.C. McMichael, C.T. Hendrickson, and D.J. Hart. 1997. "Disposition and End-of-Life Options for Personal Computers." Green Design Initiative Technical Report #97-10, Carnegie Mellon University.

Tufts University. 1996. "Life Cycle Assessment of the Disposal of Household Electronics." A Capstone Thesis Project for M.S. in Civil and Environmental Engineering, submitted by D. McKenna, K. Powers, and S. Reagan, p. 5-6. August.

this page intentionally left blank

# ATTACHMENT A TO APPENDIX EOL:
# EOL QUESTIONNAIRE

this page intentionally left blank

# DESIGN FOR THE ENVIRONMENT COMPUTER DISPLAY PROJECT
## Life-Cycle Inventory (LCI) Data Collection Questionnaire for the End-of-Life Stage

**Introduction**
The Design for the Environment (DfE) Program in the U.S. Environmental Protection Agency's (EPA) Office of Pollution Prevention and Toxics has begun a voluntary, cooperative project with the electronics industry to assess the life-cycle environmental impacts of cathode ray tube (CRT) and liquid crystal display (LCD) desktop monitors. The DfE Program conducts comparative analyses of alternative products or processes to provide businesses with data to make environmentally informed choices about product or process improvements. The DfE Program has no regulatory or enforcement agenda and was established to act as a partner with industry to promote pollution prevention. This environmental life-cycle assessment will address human and ecological risk, energy and natural resource use, performance, and cost of various display technologies. The University of Tennessee (UT) Center for Clean Products and Clean Technologies is conducting the life-cycle inventory (LCI), which is the data collection phase of a life-cycle assessment, with technical assistance from Microelectronics and Computer Technology Corporation, the Electronics Industry Alliance, and other partners.

**Boundaries**
A *life-cycle* assessment considers impacts from materials acquisition, material manufacturing, product manufacturing, use, and final disposition of a product. The LCI data are intended to be used to evaluate relative environmental impacts over the entire life-cycle of a product, including transport between life-cycle stages. In this project, the product is either a color CRT or LCD monitor. Therefore, data associated with the materials and processes used directly in the manufacturing, use, and disposition of the product are relevant to the LCI and requested in this questionnaire. Please include only materials or energy *directly* used in the disassembly, remanufacturing, recycling, or disposal of the monitor or its components (e.g., *do not include* general building heating and air conditioning).

**Product focus**
This project focuses on 17" CRT and 15" LCD desktop monitors. We will appreciate your providing data specifically on these sizes, to the extent possible.

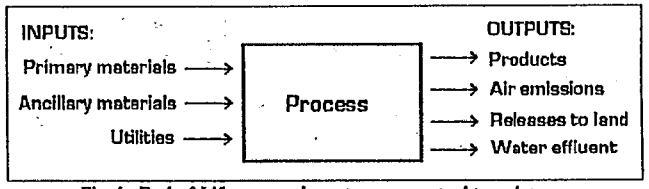

Fig. 1. End-of-Life process inventory conceptual template

**Inventory data**
We are asking you for data on CRT and LCD desktop monitors that you either remanufacture, or disassemble and recover, reuse, or recycle components and materials from. The inputs and outputs data (Fig. 1) that you provide will be aggregated in the LCI to quantify the overall inputs and outputs of a CRT and LCD. Additionally, transportation information is requested in the inventory.

**Data sources**
Much of the requested information can be drawn from existing sources, including, but not limited to the following:

1. Purchase and production records
2. Bills and invoices
3. Material Safety Data Sheets (MSDS)
4. Toxic Release Inventory (TRI) forms
5. Audit and analysis results (e.g., wastewater discharge analyses)
6. Local, state, and federal reporting forms (e.g., hazardous waste manifests)
7. Local, state, and federal permits
8. Monthly utility billing records

**How the data will be used**
UT will collect inventory data and tally the inputs and outputs for the different monitors. Information gathered by these questionnaires will be used to develop environmental profiles based on inputs and outputs for each stage in the life cycle of displays. The profiles will be used to evaluate environmental impacts from each product. Cost data will also be collected and presented along with environmental results. The environmental profiles can be used to encourage product design changes for product improvement. UT will aggregate data and ensure that data associated with particular companies remain anonymous to the EPA. UT can enter into confidentiality agreements where proprietary data are concerned. Please understand that accurate and representative information from you is critical for the success of this project.

**Results of project**
The results are intended to provide industry with an analysis of the life-cycle environmental impacts, cost, and performance of CRT and LCD computer monitors. Results will help identify areas for product and process improvement as related to risk and environmental impact (e.g., identifying material use inefficiencies) and will identify impacts from various life-cycle stages of the product systems. Use of the results will also help meet growing global demands of extended product responsibility.

**Benefits of involvement**
Your input will allow for your interests to be considered in the project development and data collection. By supplying data, the results will partially reflect your operations and, therefore, the results will be directly relevant to your interests. The project will allow you to directly apply results to your own processes and identify areas for improvement. You will also be recognized as working voluntarily and cooperatively with the U.S. EPA.

**Deadline**
Please complete this form and return it to us at the address below by *September 30, 1999*. If this is not possible, please contact Maria Leet Socolof at 423-974-9526 or at the addresses below to discuss alternative dates.

***Your cooperation and assistance are greatly appreciated.***

*For any questions, please contact **Maria Leet Socolof at 423-974-9526, <socolofml@utk.edu> or Rajive Dhingra at 423-974-8752,** <rdhingra@utk.edu> at the University of Tennessee, 311 Conference Center Bldg., Knoxville, TN 37996-4134.*
*For more project details, see the Project Fact Sheet, DfE Website <http://www.epa.gov/opptintr/dfe/compdisp/compdisp.html>, or the Draft Final Goal Definition and Scoping Document.*

## INSTRUCTIONS

1. Please be sure to read the introductory text on each page before filling out the questionnaire.
2. The data you supply in the tables should represent inputs and outputs associated only with the "product of interest" (i.e., materials, components or subassemblies that are either part of, or that are itself, the desktop monitor as defined on p. i under Product focus). If quantities provided are not specific to the "product of interest," please explain how they differ in the comments section at the bottom of the appropriate table.
3. Where supporting information is available as independent documents, reports or calculations, please provide them as attachments with reference to the associated page(s) or table(s) in this questionnaire.
4. If you have more than one product of interest to this project, please duplicate this questionnaire and fill out one questionnaire for each product.
5. If there is not adequate room on a page to supply your data (including comments), please copy the appropriate page and attach it to this packet.
6. The ensuing pages refer to the four indices shown below to detail specific information about the data. Additional information is provided below as required.
   Data Quality Indicators Index: These indicators will be used to assess the level of data quality in this questionnaire. Please report a DQI for the numerical value requested in each table on the following pages. The first category, Measured, pertains to a value that is a directly measured quantity. The second category, Calculated, refers to a value that required one or more calculations to obtain. The third category, Estimated, refers to a value that required a knowledgable employee's professional judgement to estimate. Lastly, the fourth category, Assumed, should be used only when a number had to be guessed.
   Hazardous and Nonhazardous Waste Management Methods Index: These methods are applicable to both hazardous and nonhazardous wastes (Tables 8a and 8b). Please give the appropriate abbreviation in the Management Method column on p. 8 where requested. Depending on whether the management method is on or offsite, please indicate by specifying "on" or "off" in the appropriate column on p. 8.

For Tables 2, 3a, 3b, 4, 5, 8a, and 8b:

| Transportation Modes Index | |
|---|---|
| A | - Large truck (18-wheeler), diesel |
| B | - Small truck, diesel |
| C | - Small truck, gasoline |
| D | - Rail, diesel |
| E | - Barge, diesel |
| F | - Ocean freighter, diesel |
| G | - Other (please specify in comments section) |

For Tables 3a, 3b, 4, 5, 6, 7a, 8a and 8b:

| Data Quality Indicators Index | |
|---|---|
| M | - Measured |
| C | - Calculated |
| E | - Estimated |
| A | - Assumed |

For Table 7b:

| Wastewater Treatment/Disposal Methods Index | |
|---|---|
| A | - Direct discharge to surface water |
| B | - Discharge to offsite wastewater treatment facility |
| C | - Underground injection |
| D | - Surface impoundment (e.g., settling pond) |
| E | - Direct discharge to land |
| F | - Other (please specify in comments section) |

For Tables 8a and 8b:

| Hazardous and Nonhazardous Waste Management Methods Index | |
|---|---|
| RU | - Reused |
| R | - Recycled |
| L | - Landfilled |
| Iv | - Incinerated - volume reduction |
| Ie | - Incinerated - energy conversion |
| S | - Solidified/stabilized |
| D | - Deep well injected |
| O | - Other (please specify in comments section) |

**IF YOU HAVE QUESTIONS, PLEASE CONTACT EITHER:**

Maria L. Socolof (Project Manager): Phone: 423-974-9526 Email: socolofml@utk.edu

OR

Rajive Dhingra (Project Engineer): Phone: 423-974-8752 Email: rdhingra@utk.edu

## 1. FACILITY & CONTACT INFORMATION

| Table 1. | Facility Information | | Contact Information | |
|---|---|---|---|---|
| 1. Company name: | | 5a. Prepared by: | | Date: |
| 2. Facility name: | | 5b. Title: | | |
| 3 Facility address (location): | | 5c. Phone number: | | Ext.: |
| | | 5d. Fax number: | | |
| | | 5e. Email address: | | |
| 4. Products handled onsite: | | | | |

## 2. PRODUCT OF INTEREST INFORMATION

Table 2.

1. Product of interest: _____
   E.g., End-of-Life CRT/LCD desktop monitor

2. No. of monitors processed annually (e.g., units, kg, lbs): _____

3. Facility's percent global market share for handling product of interest: _____

4. Product of interest unit weight: _____

5. Brief description of the main operations/subprocesses required to process the product of interest: _____

6. Product transport information. In this table, please list the top five locations (by quantity) from where you receive the product of interest. See Transportation Modes Index on p. iii for modes' abbreviations. Percent capacity represents what percent of the transport vehicle's total load was carrying the products of interest.

| Location (City, State) | Mode | Number of trips annually | Percent capacity |
|---|---|---|---|
| 1) | | | |
| 2) | | | |
| 3) | | | |
| 4) | | | |
| 5) | | | |

## 3. PRIMARY & ANCILLARY INPUTS

1. Primary & Ancillary Materials: Primary materials are defined as those materials that become part of a product output. Ancillary materials are those material inputs that assist in a process, yet do not become part of the final product. Please include the trade name and the generic name of each material where applicable.
2. CAS # or MSDS: Please include either the CAS (Chemical Abstract Service) number of each material (fill in the blank with the number), or state "MSDS" and append a copy to this document.
3. Annual quantity/units & Density/units: Please specify the amount of material consumed annually. Please use the units of mass-per-year (e.g., kg/yr, lb/yr). If you specify units of volume in lieu of mass, please provide the density.
4. Data quality indicators: See the Data Quality Indicators Index on p. iii for abbreviations. Please supply the DQI for the *annual quantity* value given.
5. Recycled content: Please specify the recycled content of each material identified. For example, 60/40/0 would represent a material that has 60% virgin material, 40% pre-consumer recycled and 0% post-consumer recycled content. Enter N/A (not applicable) for all components that are assemblies.
6. Transportation information: See the Transportation Modes Index on p. iii for mode abbreviations. Please specify where the material is coming from (location) and the number of trips made to your facility on an annual basis. % capacity represents what percent of the transport vehicle's total *load* was carrying the materials of interest.

| Table 3a. Primary Materials[1] | CAS # or MSDS[2] | Annual Quantity[3] | Units | Density[3] | Units | DQI[4] | Recycled Content[5] | Transportation Information (Receiving)[6] | | | |
|---|---|---|---|---|---|---|---|---|---|---|---|
| | | | | | | | | Location | Mode | # trips | % cap. |
| 1. | | | | | | | | | | | |
| 2. | | | | | | | | | | | |
| 3. | | | | | | | | | | | |
| 4. | | | | | | | | | | | |
| 5. | | | | | | | | | | | |
| 6. | | | | | | | | | | | |
| 7. | | | | | | | | | | | |

Primary material comments:

| Table 3b. Ancillary Materials[1] | CAS # or MSDS[2] | Annual Quantity[3] | Units | Density[3] | Units | DQI[4] | Recycled Content[5] | Transportation Information (Receiving)[6] | | | |
|---|---|---|---|---|---|---|---|---|---|---|---|
| | | | | | | | | Location | Mode | # trips | % cap. |
| 1. | | | | | | | | | | | |
| 2. | | | | | | | | | | | |
| 3. | | | | | | | | | | | |
| 4. | | | | | | | | | | | |
| 5. | | | | | | | | | | | |
| 6. | | | | | | | | | | | |
| 7. | | | | | | | | | | | |

Ancillary material comments:

## 4. UTILITY INPUTS

1. Annual quantity/units: Please specify the amount of each utility consumed annually. If possible, please exclude nonprocess-related consumption. If not possible, please include a comment that nonprocess-related consumption is included.
2. Data quality indicators See the Data Quality Indicators Index on p. iii for abbreviations. Please supply the DQI for the *annual quantity* value given.
3. Transportation information[2] See the Transportation Modes Index on p iii for mode abbreviations. Please specify where the fuel is coming from (Location) and the number of trips made to your facility on an annual basis. Percent capacity represents what percent of the transport vehicle's total *load* was carrying the fuel of interest.
4. Individual Utility Notes:

**Electricity:**

The quantity of electricity should reflect only that used toward manufacturing the product of interest (identified on p. 2). One approach would be to start with your facility's total annual electrical energy consumption, estimate and remove nonprocess-related consumption, then estimate what portion of the remaining consumption is related to the specific operations of interest (if you manufacture more than one product). Please include consumption in all systems that use electricity for process-related purposes. Some examples include compressed air, chilled water, water deionization and HVAC consumption where clean or controlled environments are utilized.

**Natural gas and LNG:**

Please exclude all use for space heating or other nonprocess-related uses. If you choose to use units other than MCF (thousand cubic feet), please utilize only units of energy content or volume (e g , mmBTU, therm, CCF).

**Fuel oils:**

Please use units of either volume or energy content (e.g , liters, cubic meters, mmBTU, MJ). Additionally, if the fuel oil is delivered by pipeline, enter "pipeline" in the Transportation Information space; if not delivered by pipeline, please include the associated transportation information.

**All waters (e.g., deionized, city):**

Please include all waters received onsite for process-related uses. Please indicate consumption in units of mass or volume.

| Table 4. Utilities[4] | Annual Quantity[1] | Units | DQI[2] | Transportation Information (Receiving)[3] | | | |
|---|---|---|---|---|---|---|---|
| | | | | Location (City, State) | Mode | # trips | % cap. |
| 1. Electricity | | MJ | | | | | |
| 2. Natural gas | | MCF | | | | | |
| 3. Liquified natural gas (LNG) | | MCF | | | | | |
| 4. Fuel oil - type #2 (includes distillate and diesel) | | liters | | | | | |
| 5. Fuel oil - type #4 | | liters | | | | | |
| 6. Fuel oil - type #6 (includes residual) | | liters | | | | | |
| 7. Other petroleum-based fuel | | liters | | | | | |
| 8. Water | | liters | | | | | |
| 9. | | | | | | | |
| 10. | | | | | | | |
| 11. | | | | | | | |
| 12. | | | | | | | |
| 13. | | | | | | | |

Utility comments:

## 5. PRODUCT OUTPUTS

1. Product Outputs: Product outputs are defined as useable products, materials, components or sub-assemblies.
2. CAS # or MSDS (if applicable): Please include either the CAS (Chemical Abstract Service) number of each material (fill in the blank with the number), or state "MSDS" and append a copy to this document.
3. Annual quantity/units & Density/units: Please specify the amount of material produced annually. Please use the units of mass-per-year (e.g., kg/yr, lb/yr). If you specify units of volume in lieu of mass, please provide the density.
4. Data quality indicators: See the Data Quality Indicators Index on p. iii for abbreviations. Please supply the DQI for the *annual quantity* value given.
5. Recycled content (if known): Please specify the recycled content of each material identified. For example, 60/40/0 would represent a material that has 60% virgin material, 40% pre-consumer recycled and 0% post-consumer recycled content. Enter N/A (not applicable) for all components that are assemblies.
6. Transportation information: See the Transportation Modes Index on p. iii for mode abbreviations. Please specify where the material is being sent (location) and the number of trips made on an annual basis. % capacity represents what percent of the transport vehicle's total *load* was carrying the materials of interest.

| Table 5. Product Outputs[1] | CAS # or MSDS[2] | Annual Quantity[3] | Units | Density[3] | Units | DQI[4] | Recycled Content[5] | Transportation Information (Shipping)[6] | | | |
|---|---|---|---|---|---|---|---|---|---|---|---|
| | | | | | | | | Location | Mode | # trips | % cap. |
| 1. | | | | | | | | | | | |
| 2. | | | | | | | | | | | |
| 3. | | | | | | | | | | | |
| 4. | | | | | | | | | | | |
| 5. | | | | | | | | | | | |
| 6. | | | | | | | | | | | |
| 7. | | | | | | | | | | | |

Product output comments:

## 6. AIR EMISSIONS

1. Air emissions: The emissions listed in the table below are some of the more common ones found in air release inventories; if you have information on other specific emissions, please include that information in the space provided. If you have any recent reporting forms or other air emission records, please attach copies to this questionnaire. Also, if you have information on stack* as well as fugitive* emissions, please copy this page and place each set of emissions on a different page. The energy consumed in any equipment used onsite to treat air emissions should be included in the utilities values on p. 4.
   *Stack emissions** are releases to air that occur through confined air streams, such as stacks, vents, ducts, or pipes.
   *Fugitive emissions** are all releases to air that are not released through a confined air stream. Fugitive emissions include equipment leaks, evaporative losses from surface impoundments and spills, and releases from building ventilation systems.
2. Annual quantity/units: Please specify the amount of air emissions generated annually. Please use units of mass-per-year (e.g., kg/yr, lb/yr).
3. Data quality indicators: See the Data Quality Indicators Index on p. iii for abbreviations. Please supply the DQI for the *annual quantity* value given.

| Table 6. Air Emissions[1] | CAS number | Annual Quantity[2] | Units | DQI [3] |
|---|---|---|---|---|
| Total particulates | ----- | | | |
| Particulates < 10 microns (PM-10) | ----- | | | |
| Sulfur oxides (SOx) | ----- | | | |
| Nitrogen oxides (NOx) | ----- | | | |
| Carbon monoxide | 630-08-0 | | | |
| Carbon dioxide | 124-38-9 | | | |
| Methane | 74-82-8 | | | |
| Benzene | 71-43-2 | | | |
| Toluene | 108-88-3 | | | |
| Xylenes | 1330-20-7 | | | |
| Naphthalene | 91-20-3 | | | |
| Total nonmethane VOCs | ----- | | | |
| Other speciated hydrocarbon emissions: | | | | |
| 1. | | | | |
| 2. | | | | |
| 3. | | | | |
| 4. | | | | |
| 5. | | | | |
| 6. | | | | |
| 7. | | | | |
| 8. | | | | |
| 9. | | | | |
| 10. | | | | |

| Table 6 (continued). Air Emissions[1] | CAS number | Annual Quantity[2] | Units | DQI [3] |
|---|---|---|---|---|
| Ammonia | 7664-41-7 | | | |
| Arsenic | 7440-38-2 | | | |
| Chromium | 7440-47-3 | | | |
| Copper | 7440-50-8 | | | |
| Lead | 7439-92-1 | | | |
| Manganese | 7439-96-5 | | | |
| Mercury | 7439-98-7 | | | |
| Nickel | 7440-02-0 | | | |
| Other emissions: | | | | |
| 1. | | | | |
| 2. | | | | |
| 3. | | | | |
| 4. | | | | |
| 5. | | | | |
| 6. | | | | |
| 7. | | | | |
| 8. | | | | |

Air emission comments:

## 7. WASTEWATER RELEASES & CONSTITUENTS

1. Annual quantity/units: Please specify the amount of wastewater(s) generated annually. Please use units of mass-per-year (e.g., kg/yr, lb/yr). If multiple streams exist, please copy this page and fill it out for each stream.
2. Data quality indicators: See the Data Quality Indicators Index on p. iii for abbreviations. Please include one DQI for the annual wastewater stream quantity value supplied, and one DQI for the wastewater constituents information supplied. If more than one DQI is applicable to the wastewater constituents data, please clarify this in the comment section.
3. Wastewater constituents: Please let us know what type of values you are supplying (e.g., daily maximums, monthly averages, annual averages). Additionally, if you have any recent reporting forms or other wastewater constituent records, please attach them to this questionnaire. The energy consumed in any equipment used onsite to treat wastewater releases should be included in the utilities values on p. 4.
4. Concentration/units: Please specify the concentration of wastewater constituents generated annually. Please utilize the units of mass-per-volume (e.g., mg/liter, lb/gal).
5. Wastewater treatment/disposal (WW T/D) method: See the Wastewater Treatment/Disposal Methods Index on p. iii for method abbreviations.

| Table 7a. Wastewater Stream | Annual Quantity[1] | Units | DQI for Wastewater Annual Quantity[2] | DQI for Wastewater Constituents[2] |
|---|---|---|---|---|
| | | | | |

| Table 7b. Wastewater Constituents[3] | CAS number | Concen-tration[4] | Units | WW T/D Method[5] |
|---|---|---|---|---|
| Dissolved solids | ----- | | | |
| Suspended solids | ----- | | | |
| Chemical Oxygen Demand (COD) | ----- | | | |
| Biological Oxygen Demand (BOD) | ----- | | | |
| Oil & grease | ----- | | | |
| Hydrochloric acid | 7647-01-0 | | | |
| Sulfuric acid | 7664-93-9 | | | |
| Other acids (please specify): | | | | |
| 1. | | | | |
| 2. | | | | |
| Phosphorus | 7723-14-0 | | | |
| Phosphates | ----- | | | |
| Sulfates | ----- | | | |
| Fluorides | ----- | | | |
| Cyanide | ----- | | | |
| Chloride | ----- | | | |
| Chromium | 7440-47-3 | | | |
| Iron | 7439-89-6 | | | |
| Aluminum | 7429-90-5 | | | |
| Nickel | 7440-02-0 | | | |

| Table 6b (continued). Wastewater Constituents[3] | CAS number | Concen-tration[4] | Units | WW T/D Method[5] |
|---|---|---|---|---|
| Mercury | 7439-98-7 | | | |
| Lead | 7439-92-1 | | | |
| Nitrogen | 7727-37-9 | | | |
| Zinc | 7440-66-6 | | | |
| Tin | 7440-31-5 | | | |
| Ferrous sulfate | 7720-78-7 | | | |
| Ammonia | 7664-41-7 | | | |
| Nitrates | ----- | | | |
| Pesticides | ----- | | | |
| Other constituents: | | | | |
| 1. | | | | |
| 2. | | | | |
| 3. | | | | |
| 4. | | | | |
| 5. | | | | |
| 6. | | | | |

Wastewater comments:

## 8. HAZARDOUS & NONHAZARDOUS WASTES

1. Hazardous wastes and EPA hazardous waste numbers: Please list your waste streams that are considered hazardous by the U.S. EPA. Include the hazardous waste codes for any hazardous waste you include.
2. Annual quantity/units & Density/units: Please specify the amount of waste generated annually. Use units of mass-per-year (e.g., kg/yr, lb/yr). Please also provide the density for each waste.
3. Data quality indicators: See the Data Quality Indicators Index on p. iii for abbreviations. Please supply the DQI for the *annual quantity* value given.
4. Management method: See the Management Methods Index on p. iii for abbreviations. If none are applicable, please indicate other and use the comments section to expound.
5. Transportation information: See the Transportation Modes Index on p. iii for abbreviations. Please specify where the waste is sent (location) and the number of trips made from your facility on an annual basis. % capacity represents what percent of the transport vehicle's total *load* was carrying the waste of interest.

| Table 8a. Hazardous Wastes[1] | EPA Haz. Waste #[1] | Annual Quantity[2] | Units | Density[2] | Units | DQI[3] | Mgmt. method[4] | On or offsite? | Transportation Information (Shipping)[5] Location | Mode | # trips | % cap. |
|---|---|---|---|---|---|---|---|---|---|---|---|---|
| *EXAMPLE: Spent solvent (toluene)* | *F005* | *20,000* | *kg/yr* | *0.9* | *kg/liter* | *M* | *Ie* | *off* | *Indianapolis, IN* | *A* | *24* | *40* |
| 1. | | | | | | | | | | | | |
| 2. | | | | | | | | | | | | |
| 3. | | | | | | | | | | | | |
| 4. | | | | | | | | | | | | |
| 5. | | | | | | | | | | | | |
| 6. | | | | | | | | | | | | |
| 7. | | | | | | | | | | | | |
| 8. | | | | | | | | | | | | |

Hazardous waste comments:

| Table 8b. Nonhazardous Wastes | Annual Quantity[2] | Units | Density[2] | Units | DQI[3] | Mgmt. method[4] | On or offsite? | Transportation Information (Shipping)[5] Location | Mode | # trips | % cap. |
|---|---|---|---|---|---|---|---|---|---|---|---|
| *EXAMPLE: Waste metal chips* | *22,000* | *kg/yr* | *1,000* | *kg/m3* | *C* | *R* | *off* | *Scottsdale, AZ* | *A* | *2* | *100* |
| 1. | | | | | | | | | | | |
| 2. | | | | | | | | | | | |
| 3. | | | | | | | | | | | |
| 4. | | | | | | | | | | | |
| 5. | | | | | | | | | | | |
| 6. | | | | | | | | | | | |
| 7. | | | | | | | | | | | |

Nonhazardous waste comments:

this page intentionally left blank

# APPENDIX J

## LIFE-CYCLE INVENTORY TABLES

this page intentionally left blank

# APPENDIX J

## LIFE-CYCLE INVENTORY TABLES

### Table J-1. CRT primary materials (kg/functional unit)

| Material | Upstream | Mfg | Use | EOL | Total | % or Fraction of Total |
|---|---|---|---|---|---|---|
| ABS resin | 0 | 4.24E-01 | 0 | 0 | 4.24E-01 | 0.0649% |
| Aluminum (elemental) | 0 | 3.60E-01 | 0 | 0 | 3.60E-01 | 0.0552% |
| Amyl acetate (mixed isomers) | 0 | 1.20E-03 | 0 | 0 | 1.20E-03 | 0.0002% |
| Aquadag | 0 | 2.06E-02 | 0 | 0 | 2.06E-02 | 0.0032% |
| Assembled CRT monitor | 0 | 0 | 2.20E+01 | 0 | 2.20E+01 | 3.3765% |
| Audio cable assembly | 0 | 9.45E-02 | 0 | 0 | 9.45E-02 | 0.0145% |
| Barium Carbonate | 0 | 2.97E-01 | 0 | 0 | 2.97E-01 | 0.0455% |
| Bauxite (Al2O3, ore) | 1.37E+00 | 0 | 0 | 0 | 1.37E+00 | 0.2096% |
| Blue Phosphor (ZnS) | 0 | 3.84E-03 | 0 | 0 | 3.84E-03 | 0.0006% |
| Blue Phosphor (ZnS.Ag.Al) | 0 | 1.67E-03 | 0 | 0 | 1.67E-03 | 0.0003% |
| Borax | 0 | 8.00E-03 | 0 | 0 | 8.00E-03 | 0.0012% |
| Cables/wires | 0 | 3.94E-01 | 0 | 0 | 3.94E-01 | 0.0604% |
| Cathode ray tube (CRT) | 0 | 1.07E+01 | 0 | 0 | 1.07E+01 | 1.6381% |
| Coal, average (in ground) | 3.57E+00 | 5.15E+00 | 1.79E+02 | 1.79E-02 | 1.88E+02 | 28.8170% |
| Connector | 0 | 5.67E-02 | 0 | 0 | 5.67E-02 | 0.0087% |
| CRT glass, unspecified | 0 | 9.76E+00 | 0 | 0 | 9.76E+00 | 1.4950% |
| CRT magnet assembly | 0 | 7.56E-02 | 0 | 0 | 7.56E-02 | 0.0116% |
| CRT shield assembly - ASTM A366/CC#2 | 0 | 2.42E-01 | 0 | 0 | 2.42E-01 | 0.0370% |
| Deflection Yoke assembly | 0 | 1.51E-01 | 0 | 0 | 1.51E-01 | 0.0232% |
| Demagnetic coil - PU coated paper | 0 | 1.26E-01 | 0 | 0 | 1.26E-01 | 0.0193% |
| Electron gun | 0 | 1.01E-01 | 0 | 0 | 1.01E-01 | 0.0154% |
| Ferrite | 0 | 1.70E-01 | 0 | 0 | 1.70E-01 | 0.0261% |
| Frit | 0 | 6.67E-02 | 0 | 0 | 6.67E-02 | 0.0102% |
| Fuel oil #4 | 0 | 0 | 0 | -9.53E-02 | -9.53E-02 | -0.0146% |
| Glass, unspecified | 0 | 4.91E-02 | 0 | 0 | 4.91E-02 | 0.0075% |
| Green Phosphor (ZnS) | 0 | 3.34E-03 | 0 | 0 | 3.34E-03 | 0.0005% |
| Green Phosphor (ZnS.Cu.Al) | 0 | 1.34E-03 | 0 | 0 | 1.34E-03 | 0.0002% |
| Iron (Fe, ore) | 6.90E+00 | 0 | 0 | 0 | 6.90E+00 | 1.0567% |
| Iron ore | 2.37E-01 | 0 | 0 | 0 | 2.37E-01 | 0.0363% |
| Iron scrap | 9.46E-01 | 0 | 0 | 0 | 9.46E-01 | 0.1449% |
| Lead | 0 | 4.94E-01 | 0 | 0 | 4.94E-01 | 0.0757% |
| Lead (Pb, ore) | 4.96E-01 | 0 | 0 | 0 | 4.96E-01 | 0.0759% |
| Natural gas | 0 | 1.47E+00 | 1.40E+01 | -8.88E-02 | 1.54E+01 | 2.3551% |
| Natural gas (in ground) | 8.41E-01 | 3.27E+00 | 0 | -1.64E+00 | 2.47E+00 | 0.3786% |
| Nickel (Ni, ore) | 9.80E-02 | 0 | 0 | 0 | 9.80E-02 | 0.0150% |
| Nickel Alloy (invar) | 0 | 2.72E-01 | 0 | 0 | 2.72E-01 | 0.0417% |
| Petroleum (in ground) | 1.32E+00 | 3.72E+02 | 3.80E+00 | -1.52E+00 | 3.75E+02 | 57.5016% |
| Phosphate ester | 0 | 8.31E-03 | 0 | 0 | 8.31E-03 | 0.0013% |
| Polycarbonate resin | 0 | 9.23E-01 | 0 | 0 | 9.23E-01 | 0.1415% |
| Polystyrene (PS, high impact) | 0 | 1.51E-01 | 0 | 0 | 1.51E-01 | 0.0232% |
| Potassium Carbonate | 0 | 3.78E-01 | 0 | 0 | 3.78E-01 | 0.0579% |
| Power cord assembly | 0 | 1.13E-01 | 0 | 0 | 1.13E-01 | 0.0174% |
| PPE | 0 | 7.35E-01 | 0 | 0 | 7.35E-01 | 0.1126% |
| Printed wiring board (PWB) | 0 | 8.47E-01 | 0 | 0 | 8.47E-01 | 0.1298% |

## Table J-1. CRT primary materials (kg/functional unit)

| Material | Upstream | Mfg | Use | EOL | Total | % or Fraction of Total |
|---|---|---|---|---|---|---|
| PWB-laminate | 0 | 8.47E-01 | 0 | 0 | 8.47E-01 | 0.1298% |
| Recycled CRT Glass | 0 | 2.06E+00 | 0 | 0 | 2.06E+00 | 0.3155% |
| Red Phosphor (Y2O2S) | 0 | 4.65E-03 | 0 | 0 | 4.65E-03 | 0.0007% |
| Red Phosphor (Y2O2S.Eu) | 0 | 1.33E-03 | 0 | 0 | 1.33E-03 | 0.0002% |
| Sand | 0 | 2.40E+00 | 0 | 0 | 2.40E+00 | 0.3678% |
| Sand (in ground) | 2.42E-05 | 0 | 0 | 0 | 2.42E-05 | 3.71E-08 |
| Silica | 0 | 5.33E-03 | 0 | 0 | 5.33E-03 | 0.0008% |
| Sodium Carbonate | 0 | 4.88E-01 | 0 | 0 | 4.88E-01 | 0.0747% |
| Sodium chloride (NaCl, in ground or in sea) | 3.17E-04 | 0 | 0 | 0 | 3.17E-04 | 4.85E-07 |
| Solder (63% tin; 37% lead) | 0 | 5.08E-02 | 0 | 0 | 5.08E-02 | 0.0078% |
| Solder, unspecified | 0 | 2.67E-02 | 0 | 0 | 2.67E-02 | 0.0041% |
| Steel | 2.48E-06 | 5.16E+00 | 0 | 0 | 5.16E+00 | 0.7907% |
| Strontium Carbonate | 0 | 3.31E-01 | 0 | 0 | 3.31E-01 | 0.0508% |
| Styrene-butadiene copolymers | 0 | 8.27E-01 | 0 | 0 | 8.27E-01 | 0.1268% |
| Sulfur | 1.03E-05 | 0 | 0 | 0 | 1.03E-05 | 1.58E-08 |
| Tricresyl phosphate | 0 | 2.30E-02 | 0 | 0 | 2.30E-02 | 0.0035% |
| Triphenyl phosphate | 0 | 5.29E-02 | 0 | 0 | 5.29E-02 | 0.0081% |
| Uranium, yellowcake | 0 | 3.81E-04 | 4.85E-03 | 4.85E-07 | 5.23E-03 | 0.0008% |
| Video cable assembly | 0 | 1.13E-01 | 0 | 0 | 1.13E-01 | 0.0174% |
| Zircon Sand | 0 | 5.43E-02 | 0 | 0 | 5.43E-02 | 0.0083% |
| **Total Primary Inputs** | 1.58E+01 | 4.21E+02 | 2.19E+02 | -3.32E+00 | 6.53e+02 | 100.00% |

## Table J-2. CRT ancillary materials (kg/functional unit)

| Material | Upstream | Mfg | Use | EOL | Total | % or Fraction of Total |
|---|---|---|---|---|---|---|
| 2,2,4-trimethylpentane | 0 | 1.50e-04 | 0 | 0 | 1.50e-04 | 7.59e-06 |
| Acetone | 0 | 3.17e-04 | 0 | 0 | 3.17e-04 | 1.60e-05 |
| Acrylic Polymer, unspecified | 0 | 9.13e-03 | 0 | 0 | 9.13e-03 | 4.61e-04 |
| Alkali cleaning agent | 0 | 7.72e-02 | 0 | 0 | 7.72e-02 | 3.90e-03 |
| Alkali soda (to neutralize acid waste water) | 0 | 5.45e-02 | 0 | 0 | 5.45e-02 | 2.75e-03 |
| Aluminum Oxide | 0 | 3.37e-02 | 0 | 0 | 3.37e-02 | 1.70e-03 |
| Aluminum sulfate | 7.41e-04 | 0 | 0 | 0 | 7.41e-04 | 3.74e-05 |
| Ammonia | 0 | 1.19e-04 | 0 | 0 | 1.19e-04 | 6.03e-06 |
| Ammonium bifluoride | 0 | 2.04e-03 | 0 | 0 | 2.04e-03 | 1.03e-04 |
| Ammonium chloride | 0 | 7.76e-02 | 0 | 0 | 7.76e-02 | 3.92e-03 |
| Ammonium Dichromate | 0 | 3.50e-05 | 0 | 0 | 3.50e-05 | 1.76e-06 |
| Ammonium fluoride | 0 | 8.91e-04 | 0 | 0 | 8.91e-04 | 4.50e-05 |
| Ammonium hydroxide | 0 | 7.90e-02 | 0 | 0 | 7.90e-02 | 3.99e-03 |
| Ammonium Oxalate | 0 | 8.92e-05 | 0 | 0 | 8.92e-05 | 4.50e-06 |
| Ammonium Oxalate Monohydrate | 0 | 3.16e-04 | 0 | 0 | 3.16e-04 | 1.60e-05 |
| Barium sulfate | 2.68e-03 | 0 | 0 | 0 | 2.68e-03 | 1.35e-04 |
| Barium sulfate (BaSO4, in ground) | 1.10e-03 | 0 | 0 | 0 | 1.10e-03 | 5.55e-05 |
| Bauxite | 6.31e-04 | 0 | 0 | 0 | 6.31e-04 | 3.18e-05 |
| Bauxite (Al2O3, ore) | 1.10e-03 | 4.47e-02 | 0 | -1.14e-04 | 4.57e-02 | 2.31e-03 |
| Bentonite (in ground) | 2.48e-03 | 0 | 0 | 0 | 2.48e-03 | 1.25e-04 |
| Borax | 5.20e-07 | 0 | 0 | 0 | 5.20e-07 | 2.62e-08 |
| Boric acid | 0 | 4.73e-03 | 0 | 0 | 4.73e-03 | 2.39e-04 |
| Calcium Chloride | 0 | 1.27e-01 | 0 | 0 | 1.27e-01 | 6.42e-03 |
| Calcium hydroxide | 0 | 9.54e-02 | 0 | 0 | 9.54e-02 | 4.81e-03 |
| Calcium sulfate | 6.08e-05 | 0 | 0 | 0 | 6.08e-05 | 3.07e-06 |
| Calcium sulfate (CaSO4, ore) | 2.30e-05 | 0 | 0 | 0 | 2.30e-05 | 1.16e-06 |
| Cerium Oxide | 0 | 3.28e-03 | 0 | 0 | 3.28e-03 | 1.65e-04 |
| Chlorine | 0 | 4.03e-02 | 0 | 0 | 4.03e-02 | 2.04e-03 |
| Chromium (VI) | 0 | 7.63e-05 | 0 | 0 | 7.63e-05 | 3.85e-06 |
| Chromium ore | 1.09e-07 | 0 | 0 | 0 | 1.09e-07 | 5.51e-09 |
| Chromium Oxide | 0 | 5.62e-05 | 0 | 0 | 5.62e-05 | 2.83e-06 |
| Clay (in ground) | 4.49e-03 | 0 | 0 | 8.19e+00 | 8.19e+00 | 41.35% |
| Coal, average (in ground) | 0 | 0 | 0 | 3.06e-03 | 3.06e-03 | 1.55e-04 |
| Copper (Cu, ore) | 8.67e-04 | 0 | 0 | 0 | 8.67e-04 | 4.37e-05 |
| Cyclohexane | 0 | 1.88e-04 | 0 | 0 | 1.88e-04 | 9.48e-06 |
| Deoiling agent (unspecified) | 1.33e-03 | 0 | 0 | 0 | 1.33e-03 | 6.72e-05 |
| Dimethyl Formamide | 0 | 4.36e-05 | 0 | 0 | 4.36e-05 | 2.20e-06 |
| Dioctyl Sebacate | 2.32e-04 | 0 | 0 | 0 | 2.32e-04 | 1.17e-05 |
| Dolomite | 1.43e-10 | 0 | 0 | 0 | 1.43e-10 | 7.24e-12 |
| Dolomite (in ground) | 1.60e-05 | 0 | 0 | 0 | 1.60e-05 | 8.05e-07 |
| Etoxy Naphtol Sulphonic Acid (ENSA) | 9.96e-05 | 0 | 0 | 0 | 9.96e-05 | 5.03e-06 |
| Explosive (unspecified) | 3.12e-04 | 0 | 0 | 0 | 3.12e-04 | 1.57e-05 |
| Ferric chloride | 0 | 1.37e-01 | 0 | 0 | 1.37e-01 | 6.93e-03 |
| Fluorocarbon resin | 0 | 3.75e-05 | 0 | 0 | 3.75e-05 | 1.89e-06 |
| Fluorspar (CaF2, ore) | 1.69e-06 | 0 | 0 | 0 | 1.69e-06 | 8.55e-08 |
| Formaldehyde | 0 | 6.60e-03 | 0 | 0 | 6.60e-03 | 3.33e-04 |
| Glycol ethers | 0 | 2.35e-02 | 0 | 0 | 2.35e-02 | 1.19e-03 |
| Gravel/Sand | 6.82e-03 | 0 | 0 | 0 | 6.82e-03 | 3.44e-04 |
| HV Carbon (paste) | 0 | 1.14e-05 | 0 | 0 | 1.14e-05 | 5.75e-07 |
| Hydrochloric acid | 0 | 2.36e-01 | 0 | 0 | 2.36e-01 | 1.19% |

## Table J-2. CRT ancillary materials (kg/functional unit)

| Material | Upstream | Mfg | Use | EOL | Total | % or Fraction of Total |
|---|---|---|---|---|---|---|
| Hydrofluoric acid | 0 | 8.65e-02 | 0 | 0 | 8.65e-02 | 4.36e-03 |
| Hydrogen peroxide | 0 | 8.45e-02 | 0 | 0 | 8.45e-02 | 4.26e-03 |
| Iron (Fe, ore) | 7.23e-02 | 0 | 0 | 3.41e-03 | 7.57e-02 | 3.82e-03 |
| Iron ore | 1.27e-04 | 0 | 0 | 0 | 1.27e-04 | 6.41e-06 |
| Iron sulfate (FeSO4, ore) | 2.56e-05 | 0 | 0 | 0 | 2.56e-05 | 1.29e-06 |
| Isopentylacetate | 0 | 1.74e-03 | 0 | 0 | 1.74e-03 | 8.80e-05 |
| Isopropyl alcohol | 0 | 1.94e-02 | 0 | 0 | 1.94e-02 | 9.80e-04 |
| Lead (Pb, ore) | 6.50e-05 | 0 | 0 | 0 | 6.50e-05 | 3.28e-06 |
| Lime | 0 | 3.04e-02 | 1.06e+00 | 1.06e-04 | 1.09e+00 | 5.49% |
| Limestone | 0 | 6.91e-02 | 2.41e+00 | 2.41e-04 | 2.48e+00 | 12.51% |
| Limestone (CaCO3, in ground) | 8.60e-01 | 1.08e+00 | 0 | -2.39e-01 | 1.70e+00 | 8.58% |
| Lubricant (unspecified) | 4.11e-02 | 0 | 0 | 0 | 4.11e-02 | 2.07e-03 |
| Magnesium | 5.08e-04 | 0 | 0 | 0 | 5.08e-04 | 2.56e-05 |
| Maize | 1.14e-04 | 0 | 0 | 0 | 1.14e-04 | 5.74e-06 |
| Manganese (Mn, ore) | 6.35e-08 | 0 | 0 | 0 | 6.35e-08 | 3.21e-09 |
| Muratic Acid (drum) | 0 | 1.87e-03 | 0 | 0 | 1.87e-03 | 9.41e-05 |
| Natural gas (in ground) | 0 | 0 | 0 | 4.52e-03 | 4.52e-03 | 2.28e-04 |
| Nickel (Ni, ore) | 2.45e-08 | 0 | 0 | 0 | 2.45e-08 | 1.24e-09 |
| Nitric acid | 0 | 1.44e-01 | 0 | 0 | 1.44e-01 | 7.26e-03 |
| Nitrogen | 0 | 4.57e-02 | 0 | 0 | 4.57e-02 | 2.31e-03 |
| Oil (in ground) | 0 | 0 | 0 | 3.35e-02 | 3.35e-02 | 1.69e-03 |
| Olivine | 1.08e-10 | 0 | 0 | 0 | 1.08e-10 | 5.43e-12 |
| Olivine ore | 1.24e-05 | 0 | 0 | 0 | 1.24e-05 | 6.27e-07 |
| Oxalic acid | 0 | 5.35e-05 | 0 | 0 | 5.35e-05 | 2.70e-06 |
| Oxygen (Liquid) | 0 | 7.57e-03 | 0 | 0 | 7.57e-03 | 3.82e-04 |
| Periodic Acid | 0 | 2.26e-04 | 0 | 0 | 2.26e-04 | 1.14e-05 |
| Phenolsulphonic Acid | 3.12e-03 | 0 | 0 | 0 | 3.12e-03 | 1.57e-04 |
| Polyethylene glycol | 0 | 5.04e-02 | 0 | 0 | 5.04e-02 | 2.55e-03 |
| Polyvinyl alcohol | 0 | 8.11e-03 | 0 | 0 | 8.11e-03 | 4.09e-04 |
| Polyvinyl Pyrrolidone (PVP) | 0 | 2.41e-02 | 0 | 0 | 2.41e-02 | 1.22e-03 |
| Potassium chloride (KCl, as K2O, in ground) | 1.92e-03 | 0 | 0 | 0 | 1.92e-03 | 9.69e-05 |
| Potassium hydroxide | 0 | 4.27e-02 | 0 | 0 | 4.27e-02 | 2.15e-03 |
| Potassium permanganate | 0 | 1.16e-03 | 0 | 0 | 1.16e-03 | 5.87e-05 |
| Potassium peroxymonosulfate | 0 | 7.06e-02 | 0 | 0 | 7.06e-02 | 3.56e-03 |
| Potatoes | 3.06e-05 | 0 | 0 | 0 | 3.06e-05 | 1.54e-06 |
| Pumice | 0 | 7.86e-02 | 0 | 0 | 7.86e-02 | 3.97e-03 |
| PWB-solder mask solids | 0 | 4.37e-02 | 0 | 0 | 4.37e-02 | 2.20e-03 |
| Pyrite (FeS2, ore) | 1.94e-01 | 0 | 0 | 0 | 1.94e-01 | 9.77e-03 |
| Raw materials (unspecified) | 8.16e-03 | 0 | 0 | 0 | 8.16e-03 | 4.12e-04 |
| Sand (in ground) | 5.85e-02 | 2.74e-02 | 0 | 2.71e+00 | 2.80e+00 | 14.13% |
| Silver (Ag, ore) | 2.75e-09 | 0 | 0 | 0 | 2.75e-09 | 1.39e-10 |
| Sodium Carbonate | 0 | 3.22e-02 | 0 | 0 | 3.22e-02 | 1.63e-03 |
| Sodium chloride | 0 | 0 | 0 | 1.55e-04 | 1.55e-04 | 7.80e-06 |
| Sodium chloride (NaCl, in ground or in sea) | 7.61e-01 | 1.26e-02 | 0 | -3.07e-05 | 7.73e-01 | 3.90% |
| Sodium Dichromate | 2.63e-04 | 1.05e-04 | 0 | 0 | 3.68e-04 | 1.86e-05 |
| Sodium Dichromate Dihydrate (VI) | 0 | 3.10e-05 | 0 | 0 | 3.10e-05 | 1.56e-06 |
| Sodium hydroxide | 0 | 1.98e-01 | 0 | 0 | 1.98e-01 | 9.97e-03 |
| Sodium Hypochlorite | 0 | 9.25e-05 | 0 | 0 | 9.25e-05 | 4.67e-06 |
| Sodium Metabisulfite | 0 | 4.67e-03 | 0 | 0 | 4.67e-03 | 2.36e-04 |
| Sodium Persulfate | 0 | 3.54e-04 | 0 | 0 | 3.54e-04 | 1.79e-05 |

## Table J-2. CRT ancillary materials (kg/functional unit)

| Material | Upstream | Mfg | Use | EOL | Total | % or Fraction of Total |
|---|---|---|---|---|---|---|
| Sulfur | 3.28e-03 | 0 | 0 | 0 | 3.28e-03 | 1.66e-04 |
| Sulfur (S, in ground) | 5.39e-03 | 0 | 0 | 0 | 5.39e-03 | 2.72e-04 |
| Sulfuric acid | 0 | 2.38e-01 | 0 | 0 | 2.38e-01 | 1.20% |
| Sulfuric acid, aluminum salt | 0 | 6.75e-02 | 0 | 0 | 6.75e-02 | 3.41e-03 |
| Surfactant, unspecified | 0 | 1.42e-04 | 0 | 0 | 1.42e-04 | 7.17e-06 |
| Synthetic resin, unspecified | 0 | 8.53e-04 | 0 | 0 | 8.53e-04 | 4.30e-05 |
| Talcum (ore) | 8.89e-03 | 0 | 0 | 0 | 8.89e-03 | 4.49e-04 |
| Tin (Sn, ore) | 2.43e-02 | 0 | 0 | 0 | 2.43e-02 | 1.23e-03 |
| Toluene | 0 | 4.80e-03 | 0 | 0 | 4.80e-03 | 2.42e-04 |
| unspecified CRT process material | 0 | 5.77e-03 | 0 | 0 | 5.77e-03 | 2.91e-04 |
| Uranium (U, ore) | 0 | 0 | 0 | 4.16e-08 | 4.16e-08 | 2.10e-09 |
| Wastepaper | 1.70e-03 | 0 | 0 | 0 | 1.70e-03 | 8.59e-05 |
| Xylene (mixed isomers) | 0 | 4.80e-04 | 0 | 0 | 4.80e-04 | 2.42e-05 |
| Zinc (Zn, ore) | 3.79e-02 | 0 | 0 | 0 | 3.79e-02 | 1.91e-03 |
| **Total ancillary materials** | 2.11e+00 | 3.54e+00 | 3.47e+00 | 1.07e+01 | 1.98e+01 | 100.00% |

## Table J-3. CRT utility inputs

| Material | Upstream | Mfg | Use | EOL | Total | % or Fraction of Total |
|---|---|---|---|---|---|---|
| **Fuels (kg/functional unit):** | | | | | | |
| Fuel Oil #2 (distillate) | 0 | 1.16e+00 | 0 | 0 | 1.16e+00 | 0.27% |
| Fuel oil #4 (avg. of #2 + #6) | 0 | 1.37e-01 | 0 | -1.38e+00 | -1.24e+00 | -0.29% |
| Fuel oil #6 (residual) | 0 | 3.68e+00 | 0 | 0 | 3.68e+00 | 0.85% |
| LNG | 0 | 3.35e-01 | 0 | 0 | 3.35e-01 | 0.08% |
| LPG | 0 | 3.51e+02 | 0 | 3.03e-03 | 3.51e+02 | 81.10% |
| Natural gas | 0 | 2.44e+00 | 0 | -1.30e+00 | 1.14e+00 | 0.26% |
| Coal, average (in ground) | 2.25e+00 | 1.36e+01 | 0 | -1.16e-02 | 1.58e+01 | 3.66% |
| Coal, lignite (in ground) | 9.73e-01 | 0 | 0 | 0 | 9.73e-01 | 0.22% |
| Natural gas (in ground) | 2.76e+00 | 4.56e+01 | 0 | -2.09e-01 | 4.82e+01 | 11.14% |
| Petroleum (in ground) | 2.02e+00 | 9.71e+00 | 0 | -5.77e-02 | 1.17e+01 | 2.70% |
| Uranium (U, ore) | 1.21e-04 | 2.29e-04 | 0 | -1.99e-07 | 3.49e-04 | 8.06E-07 |
| **Total fuels** | 8.00e+00 | 4.28e+02 | 0 | -2.95e+00 | 4.33e+02 | 100.00% |
| **Electricity (MJ/functional unit):** | | | | | | |
| Electricity | 7.32e+01 | 1.29e+02 | 2.29e+03 | 2.29e-01 | 2.49e+03 | |
| **Water (kg or L/functional unit):** | | | | | | |
| Water | 5.54e+02 | 1.14e+04 | 1.14e+03 | -2.73e+01 | 1.31e+04 | |
| **Total energy (fuels and electricity, MJ/functional unit):** | | | | | | |
| Energy | 3.66e+02 | 1.83e+04 | 2.29e+03 | -1.28e+02 | 2.08e+04 | |

## Table J-4. CRT air pollutant emissions (kg/functional unit)

| Material | Upstream | Mfg | Use | EOL | Total | % or Fraction of Total |
|---|---|---|---|---|---|---|
| 1,1,1-Trichloroethane | 0 | 2.31e-07 | 1.92e-06 | -3.01e-08 | 2.12e-06 | 3.19e-09 |
| 1,2-Dichloroethane | | 3.74e-07 | 3.59e-06 | -5.75e-08 | 3.90e-06 | 5.88e-09 |
| 1,2-Dichlorotetrafluoroethane | 3.38e-07 | 0 | 0 | 0 | 3.38e-07 | 5.09e-10 |
| 1,4-Dichlorobenzene | 0 | 3.06e-07 | 0 | -2.26e-09 | 3.03e-07 | 4.57e-10 |
| 2,3,7,8-TCDD | 0 | 3.73e-14 | 1.28e-12 | 1.28e-16 | 1.32e-12 | 1.99e-15 |
| 2,3,7,8-TCDF | 0 | 1.31e-13 | 4.57e-12 | 4.58e-16 | 4.71e-12 | 7.09e-15 |
| 2,4-Dinitrotoluene | 0 | 2.62e-09 | 2.51e-08 | -4.22e-10 | 2.73e-08 | 4.11e-11 |
| 2-Chloroacetophenone | 0 | 6.55e-08 | 6.28e-07 | -1.46e-10 | 6.93e-07 | 1.04e-09 |
| 2-Methylnaphthalene | 0 | 6.39e-09 | 2.67e-09 | -5.37e-11 | 9.01e-09 | 1.36e-11 |
| 3-Methylcholanthrene | 0 | 4.59e-10 | 0 | -4.04e-12 | 4.54e-10 | 6.84e-13 |
| 5-Methyl chrysene | 0 | 2.06e-10 | 1.97e-09 | -3.32e-11 | 2.15e-09 | 3.23e-12 |
| Acenaphthene | 0 | 1.05e-08 | 5.68e-08 | -7.77e-10 | 6.65e-08 | 1.00e-10 |
| Acenaphthylene | 0 | 2.86e-09 | 2.26e-08 | -3.81e-10 | 2.50e-08 | 3.77e-11 |
| Acetaldehyde | 2.16e-06 | 5.33e-06 | 5.11e-05 | -8.59e-07 | 5.78e-05 | 8.70e-08 |
| Acetic acid | 1.86e-05 | 0 | 0 | 0 | 1.86e-05 | 2.80e-08 |
| Acetone | 2.14e-06 | 0 | 0 | 0 | 2.14e-06 | 3.22e-09 |
| Acetophenone | 0 | 1.40e-07 | 1.35e-06 | -2.26e-08 | 1.46e-06 | 2.20e-09 |
| Acetylene | 3.64e-05 | 0 | 0 | 0 | 3.64e-05 | 5.48e-08 |
| Acrolein | 2.38e-11 | 2.71e-06 | 2.60e-05 | -4.37e-07 | 2.83e-05 | 4.26e-08 |
| Adsorbable organic halides | 1.14e-16 | 0 | 0 | 0 | 1.14e-16 | 1.71e-19 |
| Alcohols | 7.89e-06 | 0 | 0 | 0 | 7.89e-06 | 1.19e-08 |
| Aldehydes | 1.13e-04 | 1.52e-03 | 0 | -1.63e-04 | 1.47e-03 | 2.21e-06 |
| Alkane (unspecified) | 3.37e-04 | 0 | 0 | 0 | 3.37e-04 | 5.07e-07 |
| Alkenes | 6.21e-05 | 0 | 0 | 0 | 6.21e-05 | 9.35e-08 |
| Alkyne (unspecified) | 4.10e-06 | 0 | 0 | 0 | 4.10e-06 | 6.18e-09 |
| Aluminum (elemental) | 3.35e-04 | 1.98e-05 | 0 | -8.66e-08 | 3.55e-04 | 5.34e-07 |
| Ammonia | 4.36e-04 | 2.35e-03 | 0 | -1.06e-04 | 2.68e-03 | 4.04e-06 |
| Anthracene | 0 | 2.88e-09 | 1.21e-10 | -3.22e-10 | 2.68e-09 | 4.04e-12 |
| Antimony | 4.36e-07 | 1.66e-06 | 3.59e-06 | -6.55e-08 | 5.61e-06 | 8.45e-09 |
| Aromatic hydrocarbons | 3.73e-04 | 5.29e-08 | 0 | -1.37e-10 | 3.73e-04 | 5.61e-07 |
| Arsenic | 1.53e-04 | 1.54e-05 | 3.75e-05 | -2.64e-06 | 2.03e-04 | 3.06e-07 |
| Barium | 5.18e-06 | 8.85e-07 | 2.06e-06 | -2.45e-08 | 8.10e-06 | 1.22e-08 |
| Benzaldehyde | 1.26e-11 | 0 | 0 | 0 | 1.26e-11 | 1.90e-14 |
| Benzene | 6.17e-05 | 1.58e-02 | 1.17e-04 | -7.31e-04 | 1.52e-02 | 2.29e-05 |
| Benzo[a]anthracene | 0 | 2.21e-09 | 9.27e-09 | -1.25e-10 | 1.14e-08 | 1.71e-11 |
| Benzo[a]pyrene | 1.35e-06 | 7.92e-10 | 3.41e-09 | -6.06e-11 | 1.35e-06 | 2.03e-09 |
| Benzo[b,j,k]fluoranthene | 0 | 1.30e-09 | 1.06e-08 | -1.66e-10 | 1.18e-08 | 1.77e-11 |
| Benzo[b]fluoranthene | 0 | 5.07e-10 | 0 | -4.23e-12 | 5.03e-10 | 7.58e-13 |
| Benzo[g,h,i]perylene | 0 | 1.05e-09 | 3.60e-09 | -4.36e-11 | 4.61e-09 | 6.94e-12 |
| Benzo[k]fluoranthene | 0 | 5.07e-10 | 0 | -4.23e-12 | 5.03e-10 | 7.58e-13 |
| Benzyl chloride | 0 | 6.55e-06 | 6.28e-05 | -1.06e-06 | 6.83e-05 | 1.03e-07 |
| Beryllium | 7.37e-08 | 1.49e-06 | 1.91e-06 | -3.06e-07 | 3.16e-06 | 4.76e-09 |
| Biphenyl | 0 | 1.59e-08 | 1.52e-07 | -2.56e-09 | 1.66e-07 | 2.50e-10 |
| Boron | 7.51e-05 | 0 | 0 | 0 | 7.51e-05 | 1.13e-07 |
| Bromine | 3.80e-06 | 0 | 0 | 0 | 3.80e-06 | 5.72e-09 |
| Bromium (Br) | 7.09e-07 | 0 | 0 | 0 | 7.09e-07 | 1.07e-09 |
| Bromoform | 0 | 3.65e-07 | 3.50e-06 | -5.88e-08 | 3.80e-06 | 5.73e-09 |
| Bromomethane | 0 | 1.50e-06 | 1.43e-05 | -2.41e-07 | 1.56e-05 | 2.35e-08 |
| Butane | 4.16e-05 | 5.35e-04 | 0 | -4.72e-06 | 5.72e-04 | 8.61e-07 |

## Table J-4. CRT air pollutant emissions (kg/functional unit)

| Material | Upstream | Mfg | Use | EOL | Total | % or Fraction of Total |
|---|---|---|---|---|---|---|
| Butene | 3.56e-07 | 0 | 0 | 0 | 3.56e-07 | 5.37e-10 |
| Cadmium | 6.60e-06 | 1.04e-06 | 4.82e-06 | -6.37e-08 | 1.24e-05 | 1.87e-08 |
| Calcium | 3.01e-04 | 1.72e-05 | 0 | -7.51e-08 | 3.18e-04 | 4.80e-07 |
| Carbon | 3.64e-07 | 0 | 0 | 0 | 3.64e-07 | 5.49e-10 |
| Carbon dioxide | 2.92e+01 | 1.79e+02 | 4.45e+02 | 2.59e+00 | 6.55e+02 | 98.68% |
| Carbon disulfide | 0 | 1.22e-06 | 1.17e-05 | -1.96e-07 | 1.27e-05 | 1.91e-08 |
| Carbon monoxide | 4.18e-02 | 4.58e-01 | 8.09e-02 | -4.17e-03 | 5.76e-01 | 8.68e-04 |
| Carbon tetrachloride | 0 | 0 | 0 | 2.84e-09 | 2.84e-09 | 4.27e-12 |
| CFC-13 | 5.04e-10 | 0 | 0 | 0 | 5.04e-10 | 7.58e-13 |
| Chloride ions | 3.06e-04 | 9.83e-05 | 1.82e-04 | -2.54e-06 | 5.83e-04 | 8.78e-07 |
| Chlorine | 1.09e-06 | 5.84e-09 | 0 | -2.72e-10 | 1.10e-06 | 1.65e-09 |
| Chloroacetophenone | 0 | 0 | 0 | -1.04e-08 | -1.04e-08 | -1.57e-11 |
| Chlorobenzene | 0 | 2.06e-07 | 1.97e-06 | -3.32e-08 | 2.15e-06 | 3.23e-09 |
| Chloroform | 0 | 5.52e-07 | 5.29e-06 | -8.61e-08 | 5.76e-06 | 8.67e-09 |
| Chromium | 0 | 1.39e-07 | 0 | 0 | 1.39e-07 | 2.09e-10 |
| Chromium (III) | 7.72e-07 | 2.22e-05 | 2.45e-09 | -2.14e-06 | 2.09e-05 | 3.14e-08 |
| Chromium (VI) | 7.72e-07 | 2.15e-05 | 7.21e-06 | -2.14e-06 | 2.74e-05 | 4.12e-08 |
| Chrysene | 0 | 1.91e-09 | 1.02e-08 | -1.55e-10 | 1.20e-08 | 1.80e-11 |
| Cobalt | 1.01e-06 | 3.92e-06 | 1.22e-05 | -2.01e-07 | 1.69e-05 | 2.54e-08 |
| Copper | 4.71e-05 | 1.91e-06 | 9.96e-07 | -2.54e-08 | 5.00e-05 | 7.52e-08 |
| Cumene | 0 | 4.35e-08 | 4.75e-07 | -7.99e-09 | 5.11e-07 | 7.69e-10 |
| Cumene hydroperoxide | 0 | 6.06e-09 | 0 | 0 | 6.06e-09 | 9.12e-12 |
| Cyanide (-1) | 1.34e-07 | 2.34e-05 | 2.24e-04 | -3.77e-06 | 2.44e-04 | 3.67e-07 |
| Di(2-ethylhexyl)phthalate | 0 | 6.83e-07 | 6.55e-06 | -1.10e-07 | 7.12e-06 | 1.07e-08 |
| Dibenzo[a,h]anthracene | 0 | 6.71e-10 | 8.74e-10 | -2.82e-12 | 1.54e-09 | 2.32e-12 |
| Dichlorobenzene (mixed isomers) | 0 | 0 | 0 | -4.36e-10 | -4.36e-10 | 6.56e-13 |
| Dichlorodifluoromethane | 8.02e-10 | 0 | 0 | 0 | 8.02e-10 | 1.21e-12 |
| Dichloromethane | 0 | 2.71e-06 | 2.60e-05 | -4.33e-07 | 2.83e-05 | 4.26e-08 |
| Dimethyl Formamide | 0 | 3.49e-05 | 0 | 0 | 3.49e-05 | 5.25e-08 |
| Dimethyl sulfate | 0 | 4.49e-07 | 4.30e-06 | -7.24e-08 | 4.68e-06 | 7.05e-09 |
| Dimethylbenzanthracene | 0 | 3.82e-09 | 0 | -3.39e-11 | 3.79e-09 | 5.70e-12 |
| Dioxins, remaining unspeciated | 2.79e-13 | 1.11e-10 | 5.84e-11 | 2.11e-10 | 3.81e-10 | 5.73e-13 |
| Ethane | 5.59e-04 | 7.90e-04 | | -6.97e-06 | 1.34e-03 | 2.02e-06 |
| Ethanethiol | 6.74e-07 | 0 | 0 | 0 | 6.74e-07 | 1.01e-09 |
| Ethanol | 9.49e-06 | 0 | 0 | 0 | 9.49e-06 | 1.43e-08 |
| Ethyl Chloride | 0 | 3.93e-07 | 3.77e-06 | -6.33e-08 | 4.10e-06 | 6.17e-09 |
| Ethylbenzene | 2.25e-06 | 8.97e-07 | 8.46e-06 | -1.32e-07 | 1.15e-05 | 1.73e-08 |
| Ethylene | 4.48e-04 | 0 | 0 | 0 | 4.48e-04 | 6.75e-07 |
| Ethylene dibromide | 0 | 1.12e-08 | 1.08e-07 | -1.81e-09 | 1.17e-07 | 1.76e-10 |
| Fluoranthene | 0 | 8.56e-09 | 6.71e-08 | -1.08e-09 | 7.46e-08 | 1.12e-10 |
| Fluorene | 0 | 1.02e-08 | 8.39e-08 | -1.38e-09 | 9.28e-08 | 1.40e-10 |
| Fluoride | 2.12e-07 | 3.12e-07 | 1.95e-05 | 1.95e-09 | 2.01e-05 | 3.02e-08 |
| Fluorides (F-) | 6.70e-07 | 3.98e-05 | 0 | -3.15e-07 | 4.01e-05 | 6.04e-08 |
| Fluorine | 8.94e-10 | 0 | 0 | 0 | 8.94e-10 | 1.35e-12 |
| Formaldehyde | 2.04e-05 | 1.24e-03 | 8.46e-05 | -8.83e-06 | 1.33e-03 | 2.01e-06 |
| Furans, remaining unspeciated | 0 | 5.13e-10 | 9.32e-11 | -1.14e-10 | 4.92e-10 | 7.41e-13 |
| Halogenated hydrocarbons (unspecified) | 2.27e-06 | 2.94e-13 | 0 | -7.58e-16 | 2.27e-06 | 3.41e-09 |
| Halogenated matter (unspecified) | 1.86e-11 | 0 | 0 | 0 | 1.86e-11 | 2.79e-14 |
| HALON-1301 | 5.81e-07 | 5.11e-10 | 0 | -1.33e-12 | 5.82e-07 | 8.76e-10 |
| HCFC-22 | 2.66e-09 | 0 | 0 | 0 | 2.66e-09 | 4.01e-12 |

## Table J-4. CRT air pollutant emissions (kg/functional unit)

| Material | Upstream | Mfg | Use | EOL | Total | % or Fraction of Total |
|---|---|---|---|---|---|---|
| Heptane | 1.54e-05 | 0 | 0 | 0 | 1.54e-05 | 2.33e-08 |
| Hexane | 6.97e-06 | 4.59e-04 | 6.01e-06 | -4.15e-06 | 4.68e-04 | 7.05e-07 |
| HFC-125 | 4.54e-09 | 0 | 0 | 0 | 4.54e-09 | 6.84e-12 |
| Hydrocarbons, remaining unspeciated | 1.28e-02 | 1.58e-01 | 0 | -6.12e-04 | 1.70e-01 | 2.57e-04 |
| Hydrochloric acid | 2.39e-03 | 1.12e-02 | 1.08e-01 | -1.04e-03 | 1.20e-01 | 1.81e-04 |
| Hydrofluoric acid | 5.54e-04 | 1.40e-03 | 1.35e-02 | -2.26e-04 | 1.52e-02 | 2.29e-05 |
| Hydrogen | 2.96e-04 | 0 | 0 | 0 | 2.96e-04 | 4.46e-07 |
| Hydrogen cyanide | 1.54e-10 | 0 | 0 | 0 | 1.54e-10 | 2.32e-13 |
| Hydrogen sulfide | 4.49e-05 | 3.11e-03 | 0 | -1.31e-05 | 3.14e-03 | 4.73e-06 |
| Indeno(1,2,3-cd)pyrene | 0 | 1.50e-09 | 6.59e-09 | -9.62e-11 | 7.99e-09 | 1.20e-11 |
| Iodine | 9.41e-07 | 0 | 0 | 0 | 9.41e-07 | 1.42e-09 |
| Iron | 2.36e-04 | 3.83e-05 | 0 | -1.67e-07 | 2.74e-04 | 4.13e-07 |
| Isophorone | 0 | 5.43e-06 | 5.20e-05 | -8.74e-07 | 5.66e-05 | 8.52e-08 |
| Isopropylpropionate | 4.01e-10 | 0 | 0 | 0 | 4.01e-10 | 6.04e-13 |
| Lanthanum | 8.40e-08 | 0 | 0 | 0 | 8.40e-08 | 1.27e-10 |
| Lead | 1.66e-03 | 1.30e-05 | 1.27e-05 | 1.42e-05 | 1.70e-03 | 2.55e-06 |
| Lead (Pb, ore) | 0 | 4.41e-07 | 0 | 0 | 4.41e-07 | 6.64e-10 |
| Magnesium | 1.57e-04 | 1.03e-04 | 9.86e-04 | -1.66e-05 | 1.23e-03 | 1.85e-06 |
| Manganese | 1.96e-06 | 2.33e-05 | 4.56e-05 | -4.99e-06 | 6.59e-05 | 9.93e-08 |
| Manganese (Mn, ore) | 0 | 1.09e-06 | 0 | 0 | 1.09e-06 | 1.64e-09 |
| Mercaptans | 2.07e-07 | 0 | 0 | 0 | 2.07e-07 | 3.12e-10 |
| Mercury | 3.00e-06 | 1.12e-06 | 7.51e-06 | -1.15e-07 | 1.15e-05 | 1.73e-08 |
| Metals, remaining unspeciated | 1.21e-04 | 3.16e-07 | 0 | -1.08e-09 | 1.22e-04 | 1.83e-07 |
| Methane | 6.40e-02 | 9.08e-01 | 6.45e-01 | -4.30e-02 | 1.57e+00 | 2.37e-03 |
| Methanol | 6.73e-06 | 0 | 0 | 0 | 6.73e-06 | 1.01e-08 |
| Methyl chloride | 0 | 4.96e-06 | 4.75e-05 | -7.99e-07 | 5.17e-05 | 7.78e-08 |
| Methyl ethyl ketone | 0 | 3.65e-06 | 3.50e-05 | -5.88e-07 | 3.80e-05 | 5.73e-08 |
| Methyl hydrazine | 0 | 1.59e-06 | 1.52e-05 | -2.56e-07 | 1.66e-05 | 2.50e-08 |
| Methyl methacrylate | 0 | 1.87e-07 | 1.79e-06 | -3.02e-08 | 1.95e-06 | 2.94e-09 |
| Methyl tert-butyl ether | 0 | 3.27e-07 | 3.14e-06 | -5.28e-08 | 3.41e-06 | 5.14e-09 |
| Molybdenum | 4.61e-07 | 2.13e-06 | 5.84e-07 | -2.06e-08 | 3.15e-06 | 4.75e-09 |
| Naphthalene | 1.49e-08 | 6.04e-07 | 1.83e-06 | -2.92e-08 | 2.42e-06 | 3.64e-09 |
| Nickel | 4.13e-05 | 1.39e-04 | 6.85e-05 | -4.59e-06 | 2.45e-04 | 3.68e-07 |
| Nitrogen dioxide | 5.76e-02 | 0 | 0 | 1.85e-03 | 5.95e-02 | 8.96e-05 |
| Nitrogen oxides | 6.99e-03 | 6.95e-01 | 1.18e+00 | -1.90e-02 | 1.86e+00 | 2.80e-03 |
| Nitrous oxide | 9.47e-04 | 1.66e-02 | 3.40e-03 | -1.11e-03 | 1.98e-02 | 2.99e-05 |
| Nonmethane hydrocarbons, remaining unspeciated | 9.97e-02 | 1.10e-01 | 0 | -1.91e-03 | 2.08e-01 | 3.13e-04 |
| n-Propane | 1.50e-04 | 1.69e-06 | 0 | -3.70e-07 | 1.51e-04 | 2.27e-07 |
| Other organics | 5.60e-04 | 7.83e-02 | 0 | -3.65e-03 | 7.52e-02 | 1.13e-04 |
| o-xylene | 0 | 1.13e-06 | 5.71e-08 | -3.79e-08 | 1.15e-06 | 1.73e-09 |
| Pentachlorobenzene | 1.93e-15 | 0 | 0 | 0 | 1.93e-15 | 2.91e-18 |
| Pentachlorophenol | 3.12e-16 | 0 | 0 | 0 | 3.12e-16 | 4.71e-19 |
| Pentane | 3.47e-05 | 6.62e-04 | 0 | -5.84e-06 | 6.91e-04 | 1.04e-06 |
| Perfluoroethane | 1.44e-05 | 0 | 0 | 0 | 1.44e-05 | 2.17e-08 |
| Perfluoromethane | 1.30e-04 | 0 | 0 | 0 | 1.30e-04 | 1.95e-07 |
| Phenanthrene | 0 | 3.22e-08 | 2.51e-07 | -4.11e-09 | 2.79e-07 | 4.20e-10 |
| Phenol | 2.93e-06 | 1.50e-07 | 1.43e-06 | -2.41e-08 | 4.49e-06 | 6.77e-09 |
| Phosphorus (yellow or white) | 1.91e-06 | 1.26e-05 | 4.95e-06 | -1.20e-07 | 1.94e-05 | 2.92e-08 |
| Phosphorus pentoxide | 8.18e-10 | 0 | 0 | 0 | 8.18e-10 | 1.23e-12 |

## Table J-4. CRT air pollutant emissions (kg/functional unit)

| Material | Upstream | Mfg | Use | EOL | Total | % or Fraction of Total |
|---|---|---|---|---|---|---|
| PM | 1.28e-01 | 1.31e-01 | 0 | -1.88e-02 | 2.40e-01 | 3.62e-04 |
| PM-10 | 0 | 3.15e-03 | 5.78e-02 | 4.78e-06 | 6.09e-02 | 9.17e-05 |
| Polycyclic aromatic hydrocarbons | 1.87e-05 | 5.87e-11 | 0 | -1.52e-13 | 1.87e-05 | 2.82e-08 |
| Potassium | 4.90e-05 | 0 | 0 | 0 | 4.90e-05 | 7.37e-08 |
| Propionaldehyde | 4.61e-13 | 3.55e-06 | 3.41e-05 | -5.73e-07 | 3.71e-05 | 5.58e-08 |
| Propionic acid | 2.03e-10 | 0 | 0 | 0 | 2.03e-10 | 3.06e-13 |
| Propylene | 3.77e-05 | 0 | 0 | 0 | 3.77e-05 | 5.68e-08 |
| Pyrene | 0 | 5.44e-09 | 3.33e-08 | -5.09e-10 | 3.82e-08 | 5.76e-11 |
| Scandium | 2.04e-08 | 0 | 0 | 0 | 2.04e-08 | 3.08e-11 |
| Selenium | 4.69e-07 | 1.29e-05 | 1.17e-04 | -1.96e-06 | 1.28e-04 | 1.93e-07 |
| Silicon | 1.06e-03 | 1.72e-05 | 0 | -7.51e-08 | 1.08e-03 | 1.62e-06 |
| Sodium | 2.88e-05 | 1.02e-04 | 0 | -4.45e-07 | 1.30e-04 | 1.96e-07 |
| Strontium | 5.83e-06 | 0 | 0 | 0 | 5.83e-06 | 8.78e-09 |
| Styrene | 0 | 2.34e-07 | 2.24e-06 | -3.77e-08 | 2.44e-06 | 3.67e-09 |
| Sulfur dioxide | 3.37e-01 | 1.26e-01 | 2.49e+00 | 8.30e-04 | 2.96e+00 | 4.45e-03 |
| Sulfur oxides | 5.71e-03 | 8.20e-01 | 0 | -2.97e-02 | 7.96e-01 | 1.20e-03 |
| Sulfuric acid | 8.81e-07 | 0 | 0 | 0 | 8.81e-07 | 1.33e-09 |
| Tars (unspecified) | 9.87e-13 | 0 | 0 | 0 | 9.87e-13 | 1.49e-15 |
| Tetrachloroethylene | 0 | 4.02e-07 | 3.86e-06 | -6.20e-08 | 4.20e-06 | 6.32e-09 |
| Thallium | 1.39e-08 | 0 | 0 | 0 | 1.39e-08 | 2.10e-11 |
| Thorium | 4.51e-08 | 0 | 0 | 0 | 4.51e-08 | 6.79e-11 |
| Tin | 2.62e-08 | 0 | 0 | 0 | 2.62e-08 | 3.94e-11 |
| Titanium | 1.00e-05 | 0 | 0 | 0 | 1.00e-05 | 1.51e-08 |
| TOCs, remaining unspeciated | 0 | 2.89e-04 | 5.76e-03 | 5.76e-07 | 6.05e-03 | 9.11e-06 |
| Toluene | 2.17e-05 | 3.84e-03 | 2.54e-05 | -3.87e-07 | 3.89e-03 | 5.86e-06 |
| Trichloroethylene | 0 | 0 | 0 | 2.84e-09 | 2.84e-09 | 4.27e-12 |
| Trichlorofluoromethane | 8.27e-09 | 0 | 0 | 0 | 8.27e-09 | 1.25e-11 |
| Uranium | 4.43e-08 | 0 | 0 | 0 | 4.43e-08 | 6.67e-11 |
| Vanadium | 6.77e-05 | 2.74e-04 | 1.76e-05 | -1.39e-06 | 3.57e-04 | 5.38e-07 |
| Vinyl acetate | 0 | 7.11e-08 | 6.82e-07 | -1.15e-08 | 7.41e-07 | 1.12e-09 |
| Vinyl chloride | 0 | 0 | 0 | 5.67e-09 | 5.67e-09 | 8.54e-12 |
| VOCs, remaining unspeciated | 1.10e-03 | 0 | 0 | 0 | 1.10e-03 | 1.65e-06 |
| Waste metals, unspecified | 1.45e-05 | 0 | 0 | 0 | 1.45e-05 | 2.18e-08 |
| Xylene (mixed isomers) | 3.65e-05 | 3.84e-04 | 3.32e-06 | -6.94e-09 | 4.24e-04 | 6.38e-07 |
| Zinc (elemental) | 5.84e-04 | 1.56e-05 | 1.52e-05 | -2.78e-07 | 6.15e-04 | 9.26e-07 |
| Zirconium | 2.14e-08 | 0 | 0 | 0 | 2.14e-08 | 3.23e-11 |
| **Total air pollutants** | 3.00e+01 | 1.83e+02 | 4.49e+02 | 2.47e+00 | 6.64e+02 | 100.00% |

## Table J-5. CRT water outputs (kg/functional unit)

| Material | Disposition | Upstream | Mfg | Use | EOL | Total | % or Fraction of Total |
|---|---|---|---|---|---|---|---|
| WASTEWATER STREAMS | | | | | | | |
| Wastewater stream | surface water | 1.70e+01 | 1.41e+03 | 0 | -3.65e+00 | 1.42e+03 | 93.76% |
| Wastewater stream | treatment | 0 | 9.48e+01 | 0 | 0 | 9.48e+01 | 6.24% |
| **Total wastewater streams** | | 1.70e+01 | 1.51e+03 | 0.00e+00 | -3.65e+00 | 1.52e+03 | 100.00% |
| WATER POLLUTANTS | | | | | | | |
| 1,1,1-Trichloroethane | surface water | 1.70e-13 | 0 | 0 | 0 | 1.70e-13 | 8.15e-15 |
| 1,2-Dichloroethane | surface water | 0 | 0 | 0 | 8.41e-11 | 8.41e-11 | 4.03e-12 |
| Acetic acid | surface water | 1.49e-09 | 0 | 0 | 0 | 1.49e-09 | 7.16e-11 |
| Acids (H+) | surface water | 1.52e-04 | 1.03e-07 | 0 | -4.78e-09 | 1.53e-04 | 7.30e-06 |
| Adsorbable organic halides | surface water | 1.04e-05 | 3.76e-10 | 0 | -9.75e-13 | 1.04e-05 | 4.97e-07 |
| Alcohols | surface water | 1.19e-07 | 0 | 0 | 0 | 1.19e-07 | 5.71e-09 |
| Aldehydes | surface water | 3.10e-09 | 0 | 0 | 0 | 3.10e-09 | 1.48e-10 |
| Alkane (unspecified) | surface water | 6.77e-06 | 0 | 0 | 0 | 6.77e-06 | 3.24e-07 |
| Alkenes | surface water | 5.27e-07 | 0 | 0 | 0 | 5.27e-07 | 2.52e-08 |
| Aluminum (+3) | surface water | 2.74e-03 | 1.43e-04 | 0 | -3.70e-07 | 2.89e-03 | 1.38e-04 |
| Aluminum hydroxide | surface water | 1.39e-09 | 0 | 0 | 0 | 1.39e-09 | 6.65e-11 |
| Ammonia | surface water | 1.86e-04 | 0 | 0 | -4.05e-06 | 1.81e-04 | 8.69e-06 |
| Ammonia ions | surface water | 3.54e-06 | 2.76e-02 | 0 | -6.63e-05 | 2.75e-02 | 1.32e-03 |
| Aromatic hydrocarbons | surface water | 3.00e-05 | 8.81e-08 | 0 | -2.28e-10 | 3.01e-05 | 1.44e-06 |
| Arsenic cmpds | surface water | 5.47e-06 | 0 | 0 | 1.35e-08 | 5.48e-06 | 2.63e-07 |
| Barium cmpds | surface water | 3.53e-04 | 2.82e-07 | 0 | 4.03e-07 | 3.53e-04 | 1.69e-05 |
| Barium sulfate | surface water | 6.71e-04 | 0 | 0 | 0 | 6.71e-04 | 3.21e-05 |
| Benzene | surface water | 7.40e-06 | 0 | 0 | 8.41e-11 | 7.40e-06 | 3.54e-07 |
| BOD | surface water | 3.93e-04 | 1.95e-01 | 0 | -4.65e-04 | 1.95e-01 | 9.34e-03 |
| Boric acid | surface water | 1.77e-06 | 0 | 0 | 0 | 1.77e-06 | 8.49e-08 |
| Boron (B III) | surface water | 1.75e-06 | 0 | 0 | 0 | 1.75e-06 | 8.39e-08 |
| Cadmium cmpds | surface water | 5.59e-07 | 2.94e-10 | 0 | 8.03e-10 | 5.60e-07 | 2.68e-08 |
| Calcium (+2) | surface water | 4.96e-03 | 0 | 0 | 0 | 4.96e-03 | 2.38e-04 |
| Carbon tetrachloride | surface water | 0 | 0 | 0 | 8.41e-11 | 8.41e-11 | 4.03e-12 |
| Carbonate ion | surface water | 4.83e-03 | 0 | 0 | 0 | 4.83e-03 | 2.31e-04 |
| Cesium (+2) | surface water | 1.93e-08 | 0 | 0 | 0 | 1.93e-08 | 9.24e-10 |
| Chloride ions | surface water | 4.29e-01 | 6.48e+00 | 0 | -2.39e-02 | 6.88e+00 | 32.95% |
| Chlorine | surface water | 8.94e-07 | 0 | 0 | 0 | 8.94e-07 | 4.28e-08 |
| Chloroform | surface water | 1.75e-11 | 0 | 0 | 8.41e-11 | 1.02e-10 | 4.87e-12 |
| Chromium | surface water | 8.20e-08 | 0 | 0 | 0 | 8.20e-08 | 3.93e-09 |
| Chromium (III) | surface water | 2.73e-05 | 3.77e-08 | 0 | 1.32e-08 | 2.74e-05 | 1.31e-06 |
| Chromium (VI) | surface water | 4.68e-07 | 3.77e-08 | 0 | 1.32e-08 | 5.19e-07 | 2.49e-08 |
| Chromium ore | surface water | 0 | 1.02e-05 | 0 | 0 | 1.02e-05 | 4.90e-07 |
| Chromium ore | treatment | 0 | 1.03e-06 | 0 | 0 | 1.03e-06 | 4.95e-08 |
| Cobalt (Co I, Co II, Co III) | surface water | 2.45e-06 | 0 | 0 | 0 | 2.45e-06 | 1.17e-07 |
| COD | surface water | 1.00e-02 | 1.60e+00 | 0 | -3.94e-03 | 1.61e+00 | 7.71% |
| COD | treatment | 0 | 8.33e-03 | 0 | 0 | 8.33e-03 | 3.99e-04 |
| Copper | surface water | 0 | 1.80e-06 | 0 | 0 | 1.80e-06 | 8.63e-08 |
| Copper (+1 & +2) | surface water | 1.61e-05 | 5.87e-09 | 0 | -1.52e-11 | 1.61e-05 | 7.70e-07 |
| Copper (+1 & +2) | treatment | 0 | 9.71e-05 | 0 | 0 | 9.71e-05 | 4.65e-06 |
| Cyanide (-1) | surface water | 1.85e-06 | 6.06e-07 | 0 | -1.07e-12 | 2.46e-06 | 1.18e-07 |
| Dichloromethane | surface water | 5.02e-08 | 0 | 0 | 1.35e-10 | 5.03e-08 | 2.41e-09 |
| Dissolved organic matter (chlorinated) | surface water | 2.27e-06 | 0 | 0 | 0 | 2.27e-06 | 1.08e-07 |
| Dissolved organics | surface water | 5.54e-04 | 2.71e-07 | 0 | -1.26e-08 | 5.55e-04 | 2.66e-05 |

## Table J-5. CRT water outputs (kg/functional unit)

| Material | Disposition | Upstream | Mfg | Use | EOL | Total | % or Fraction of Total |
|---|---|---|---|---|---|---|---|
| Dissolved solids | surface water | 5.30e-03 | 3.62e+00 | 0 | -8.77e-05 | 3.62e+00 | 17.36% |
| Dissolved solids | treatment | 0 | 8.01e-02 | 0 | 0 | 8.01e-02 | 3.84e-03 |
| Edetic acid (EDTA) | surface water | 3.01e-09 | 0 | 0 | 0 | 3.01e-09 | 1.44e-10 |
| Ethylbenzene | surface water | 6.70e-07 | 0 | 0 | 3.04e-10 | 6.71e-07 | 3.21e-08 |
| Fluoride | surface water | 1.89e-05 | 3.45e-03 | 0 | 0 | 3.47e-03 | 1.66e-04 |
| Fluoride | treatment | 0 | 3.51e-04 | 0 | 0 | 3.51e-04 | 1.68e-05 |
| Fluorides (F-) | surface water | 9.63e-05 | 2.97e-03 | 0 | -7.72e-06 | 3.06e-03 | 1.46e-04 |
| Formaldehyde | surface water | 2.20e-13 | 0 | 0 | 0 | 2.20e-13 | 1.05e-14 |
| Halogenated matter (organic) | surface water | 2.71e-10 | 1.17e-10 | 0 | -3.05e-13 | 3.88e-10 | 1.86e-11 |
| Hexachloroethane | surface water | 3.09e-17 | 0 | 0 | 0 | 3.09e-17 | 1.48e-18 |
| Hydrazine | surface water | 1.38e-09 | 0 | 0 | 0 | 1.38e-09 | 6.62e-11 |
| Hydrocarbons, remaining unspeciated | surface water | 1.58e-04 | 3.52e-04 | 0 | -4.25e-07 | 5.09e-04 | 2.44e-05 |
| Hypochlorite | surface water | 5.26e-09 | 0 | 0 | 0 | 5.26e-09 | 2.52e-10 |
| Hypochlorous acid | surface water | 5.26e-09 | 0 | 0 | 0 | 5.26e-09 | 2.52e-10 |
| Iodide (-1) | surface water | 3.23e-06 | 0 | 0 | 0 | 3.23e-06 | 1.54e-07 |
| Iron | surface water | 0 | 2.93e-03 | 0 | 0 | 2.93e-03 | 1.40e-04 |
| Iron (+2 & +3) | surface water | 1.76e-03 | 3.55e-07 | 0 | -1.57e-08 | 1.76e-03 | 8.42e-05 |
| Lead | surface water | 0 | 4.64e-05 | 0 | 0 | 4.64e-05 | 2.22e-06 |
| Lead | treatment | 0 | 1.03e-06 | 0 | 0 | 1.03e-06 | 4.95e-08 |
| Lead cmpds | surface water | 1.59e-05 | 1.17e-09 | 0 | 1.60e-09 | 1.59e-05 | 7.59e-07 |
| Lead cmpds | treatment | 0 | 1.62e-05 | 0 | 0 | 1.62e-05 | 7.75e-07 |
| Lithium salts | surface water | 1.55e-10 | 0 | 0 | 0 | 1.55e-10 | 7.40e-12 |
| Magnesium (+2) | surface water | 2.68e-03 | 0 | 0 | 0 | 2.68e-03 | 1.28e-04 |
| Manganese | surface water | 0 | 3.60e-06 | 0 | 0 | 3.60e-06 | 1.73e-07 |
| Manganese cmpds | surface water | 1.02e-04 | 0 | 0 | 0 | 1.02e-04 | 4.88e-06 |
| Mercury compounds | surface water | 9.68e-07 | 1.35e-12 | 0 | 4.33e-11 | 9.68e-07 | 4.63e-08 |
| Metals, remaining unspeciated | surface water | 6.74e-04 | 9.75e-03 | 0 | -3.42e-05 | 1.04e-02 | 4.98e-04 |
| Molybdenum | surface water | 0 | 1.20e-07 | 0 | 0 | 1.20e-07 | 5.77e-09 |
| Molybdenum (Mo II, Mo III, Mo IV, Mo V, Mo VI) | surface water | 8.27e-06 | 0 | 0 | 0 | 8.27e-06 | 3.96e-07 |
| Morpholine | surface water | 1.46e-08 | 0 | 0 | 0 | 1.46e-08 | 7.01e-10 |
| Nickel | surface water | 0 | 7.94e-05 | 0 | 0 | 7.94e-05 | 3.80e-06 |
| Nickel (+2) | surface water | 6.69e-07 | 0 | 0 | 0 | 6.69e-07 | 3.20e-08 |
| Nickel cmpds | surface water | 1.75e-05 | 5.87e-10 | 0 | -1.52e-12 | 1.75e-05 | 8.38e-07 |
| Nitrate | surface water | 9.24e-05 | 6.10e-05 | 0 | -1.96e-06 | 1.51e-04 | 7.25e-06 |
| Nitrates/nitrites | surface water | 2.29e-05 | 3.95e-06 | 0 | 0 | 2.69e-05 | 1.29e-06 |
| Nitrites | surface water | 1.91e-06 | 0 | 0 | 0 | 1.91e-06 | 9.15e-08 |
| Nitrogen | surface water | 4.46e-05 | 7.18e-03 | 0 | 0 | 7.23e-03 | 3.46e-04 |
| Nitrogen dioxide | surface water | 6.20e-04 | 0 | 0 | 0 | 6.20e-04 | 2.97e-05 |
| Oil & grease | surface water | 0 | 7.46e-03 | 0 | 0 | 7.46e-03 | 3.57e-04 |
| Other nitrogen | surface water | 5.28e-04 | 1.59e-08 | 0 | -4.11e-11 | 5.28e-04 | 2.53e-05 |
| Other organics | surface water | 3.98e-05 | 0 | 0 | 0 | 3.98e-05 | 1.90e-06 |
| Oxalic acid | surface water | 6.02e-09 | 0 | 0 | 0 | 6.02e-09 | 2.88e-10 |
| o-xylene | surface water | 0 | 0 | 0 | 7.84e-10 | 7.84e-10 | 3.76e-11 |
| Phenol | surface water | 6.25e-05 | 3.63e-03 | 0 | -9.41e-06 | 3.68e-03 | 1.76e-04 |
| Phosphate (PO43-) | surface water | 1.75e-04 | 0 | 0 | 0 | 1.75e-04 | 8.39e-06 |
| Phosphate as P2O5 | surface water | 0 | 1.21e-06 | 0 | 0 | 1.21e-06 | 5.80e-08 |
| Phosphates | surface water | 3.36e-05 | 5.85e-07 | 0 | 6.93e-09 | 3.42e-05 | 1.64e-06 |
| Phosphorus (yellow or white) | surface water | 3.94e-06 | 5.05e-05 | 0 | 0 | 5.44e-05 | 2.61e-06 |
| Phosphorus pentoxide | surface water | 2.45e-08 | 0 | 0 | 0 | 2.45e-08 | 1.18e-09 |

## Table J-5. CRT water outputs (kg/functional unit)

| Material | Disposition | Upstream | Mfg | Use | EOL | Total | % or Fraction of Total |
|---|---|---|---|---|---|---|---|
| Polycyclic aromatic hydrocarbons | surface water | 7.88e-06 | 1.41e-09 | 0 | -3.66e-12 | 7.88e-06 | 3.77e-07 |
| Potassium (+1) | surface water | 1.12e-03 | 0 | 0 | 0 | 1.12e-03 | 5.38e-05 |
| Rubidium ion (Rb+) | surface water | 1.93e-07 | 0 | 0 | 0 | 1.93e-07 | 9.26e-09 |
| Salts (unspecified) | surface water | 1.71e-03 | 1.62e-03 | 0 | -4.21e-06 | 3.33e-03 | 1.59e-04 |
| Sand | surface water | 1.80e-08 | 0 | 0 | 0 | 1.80e-08 | 8.62e-10 |
| Saponifiable oils and fats | surface water | 2.38e-04 | 0 | 0 | 0 | 2.38e-04 | 1.14e-05 |
| Selenium | surface water | 1.34e-05 | 0 | 0 | 8.15e-11 | 1.34e-05 | 6.44e-07 |
| Silver compounds | surface water | 1.16e-08 | 0 | 0 | 2.55e-09 | 1.41e-08 | 6.78e-10 |
| Sodium | surface water | 9.07e-05 | 0 | 0 | 0 | 9.07e-05 | 4.34e-06 |
| Sodium (+1) | surface water | 2.90e-01 | 7.04e+00 | 0 | -3.08e-02 | 7.30e+00 | 34.94% |
| Strontium (Sr II) | surface water | 3.73e-04 | 0 | 0 | 0 | 3.73e-04 | 1.79e-05 |
| Sulfate ion (-4) | surface water | 3.75e-02 | 9.61e-04 | 0 | -1.85e-06 | 3.84e-02 | 1.84e-03 |
| Sulfate ion (-4) | treatment | 0 | 1.09e-03 | 6.84e-02 | 6.84e-06 | 6.95e-02 | 3.33e-03 |
| Sulfide | surface water | 3.99e-06 | 5.97e-08 | 0 | -2.64e-09 | 4.05e-06 | 1.94e-07 |
| Sulfites | surface water | 1.73e-06 | 0 | 0 | 0 | 1.73e-06 | 8.27e-08 |
| Sulfur | surface water | 3.32e-11 | 0 | 0 | 0 | 3.32e-11 | 1.59e-12 |
| Suspended solids | surface water | 7.72e-03 | 8.69e-01 | 0 | -2.11e-03 | 8.74e-01 | 4.19% |
| Suspended solids | treatment | 0 | 1.29e-03 | 1.78e-03 | 1.78e-07 | 3.07e-03 | 1.47e-04 |
| Tars (unspecified) | surface water | 1.53e-14 | 0 | 0 | 0 | 1.53e-14 | 7.34e-16 |
| Tetrachloroethylene | surface water | 7.61e-14 | 0 | 0 | 8.41e-11 | 8.42e-11 | 4.03e-12 |
| Tin (Sn++, Sn4+) | surface water | 1.35e-04 | 0 | 0 | 0 | 1.35e-04 | 6.45e-06 |
| Titanium tetrachloride | surface water | 1.59e-04 | 0 | 0 | 0 | 1.59e-04 | 7.60e-06 |
| TOCs | surface water | 2.85e-03 | 8.81e-07 | 0 | -2.28e-09 | 2.86e-03 | 1.37e-04 |
| Toluene | surface water | 8.52e-06 | 1.29e-08 | 0 | 2.90e-09 | 8.54e-06 | 4.09e-07 |
| Trichloroethylene | surface water | 4.68e-12 | 0 | 0 | 8.41e-11 | 8.88e-11 | 4.25e-12 |
| Triethylene glycol | surface water | 1.00e-05 | 0 | 0 | 0 | 1.00e-05 | 4.81e-07 |
| Vanadium (V3+, V5+) | surface water | 1.42e-05 | 0 | 0 | 0 | 1.42e-05 | 6.78e-07 |
| Vinyl chloride | surface water | 0 | 0 | 0 | 1.69e-10 | 1.69e-10 | 8.07e-12 |
| VOCs, remaining unspeciated | surface water | 6.75e-06 | 0 | 0 | 0 | 6.75e-06 | 3.23e-07 |
| Waste metals, unspecified | surface water | 2.14e-04 | 0 | 0 | 0 | 2.14e-04 | 1.03e-05 |
| Waste oil | surface water | 3.65e-03 | 1.01e-01 | 0 | -3.13e-04 | 1.04e-01 | 4.98e-03 |
| Xylene (mixed isomers) | surface water | 2.17e-05 | 0 | 0 | 7.31e-10 | 2.17e-05 | 1.04e-06 |
| Zinc (+2) | surface water | 6.66e-05 | 1.23e-08 | 0 | -3.17e-10 | 6.66e-05 | 3.19e-06 |
| Zinc (elemental) | surface water | 0 | 1.39e-05 | 0 | 0 | 1.39e-05 | 6.64e-07 |
| Zinc (elemental) | treatment | 0 | 1.03e-06 | 0 | 0 | 1.03e-06 | 4.95e-08 |
| **Total water pollutants** | | 8.12e-01 | 2.01e+01 | 7.02e-02 | -6.18e-02 | 2.09e+01 | 100.00% |

## Table J-6. CRT hazardous waste outputs (kg/functional unit)

| Material | Disposition | Upstream | Mfg | Use | EOL | Total | % or Fraction of Total |
|---|---|---|---|---|---|---|---|
| Barium debris (D008 waste) | landfill | 0 | 2.14E-04 | 0 | 0 | 2.14E-04 | 2.26E-05 |
| Broken CRT glass | landfill | 0 | 1.88E-03 | 0 | 0 | 1.88E-03 | 1.99E-04 |
| Carbon and filmer waste | landfill | 0 | 1.03E-03 | 0 | 0 | 1.03E-03 | 1.09E-04 |
| Chrome debris (D007 waste) | treatment | 0 | 1.47E-04 | 0 | 0 | 1.47E-04 | 1.56E-05 |
| Chrome liquid waste (D007 waste) | recycling/reuse | 0 | 9.80E-03 | 0 | 0 | 9.80E-03 | 1.04E-03 |
| cinders from CRT glass mfg (70% PbO) | landfill | 0 | 8.26E-03 | 0 | 0 | 8.26E-03 | 8.73E-04 |
| CRT glass faceplate EP dust (Pb) (D008 waste) | landfill | 0 | 1.03E-03 | 0 | 0 | 1.03E-03 | 1.09E-04 |
| CRT glass funnel EP dust (Pb) (D008 waste) | recycling/reuse | 0 | 5.01E-03 | 0 | 0 | 5.01E-03 | 5.30E-04 |
| CRT glass, cullet | recycling/reuse | 0 | 0 | 0 | 4.84E-01 | 4.84E-01 | 5.12% |
| CRT glass, funnel | recycling/reuse | 0 | 0 | 0 | 2.29E-01 | 2.29E-01 | 2.42% |
| EOL CRT Monitor, landfilled | landfill | 0 | 0 | 0 | 7.20E+00 | 7.20E+00 | 76.11% |
| Frit | landfill | 0 | 2.99E-03 | 0 | 0 | 2.99E-03 | 3.16E-04 |
| General Hazardous Waste | landfill | 4.85E-02 | 0 | 0 | -9.61E-05 | 4.84E-02 | 5.12E-03 |
| General Hazardous Waste | treatment | 0 | 1.24E-01 | 0 | 0 | 1.24E-01 | 1.31E-02 |
| Hazardous sludge (Pb) (D008) | landfill | 0 | 1.52E-03 | 0 | 0 | 1.52E-03 | 1.60E-04 |
| Hazardous waste | landfill | 3.85E-04 | 6.15E-01 | 0 | -1.50E-03 | 6.14E-01 | 6.49% |
| Hydrofluoric acid | landfill | 0 | 1.78E-03 | 0 | 0 | 1.78E-03 | 1.88E-04 |
| Lead contaminated grit (D008 waste) | landfill | 0 | 3.46E-05 | 0 | 0 | 3.46E-05 | 3.65E-06 |
| Lead debris (D008 waste) | landfill | 0 | 2.14E-04 | 0 | 0 | 2.14E-04 | 2.26E-05 |
| Lead sulfate cake | landfill | 0 | 2.67E-05 | 0 | 0 | 2.67E-05 | 2.82E-06 |
| Printed wiring board (PWB) | recycling/reuse | 0 | 0 | 0 | 1.46E-01 | 1.46E-01 | 1.54E-02 |
| PWB-Decontaminating debris | treatment | 0 | 1.55E-02 | 0 | 0 | 1.55E-02 | 1.64E-03 |
| PWB-Lead contaminated waste oil | treatment | 0 | 1.16E-02 | 0 | 0 | 1.16E-02 | 1.23E-03 |
| PWB-Route dust | recycling/reuse | 0 | 1.20E-02 | 0 | 0 | 1.20E-02 | 1.27E-03 |
| PWB-Solder dross | recycling/reuse | 0 | 6.70E-02 | 0 | 0 | 6.70E-02 | 7.09E-03 |
| PWB-Waste cupric etchant | recycling/reuse | 0 | 2.25E-01 | 0 | 0 | 2.25E-01 | 2.38% |
| Silica coat waste | treatment | 0 | 2.86E-04 | 0 | 0 | 2.86E-04 | 3.02E-05 |
| Slag and ash | landfill | 0 | 2.47E-03 | 0 | 0 | 2.47E-03 | 2.61E-04 |
| sludge from CRT glass mfg (1% PbO) | landfill | 0 | 8.77E-04 | 0 | 0 | 8.77E-04 | 9.28E-05 |
| Slurry scrap (chromium-based) | landfill | 0 | 8.62E-04 | 0 | 0 | 8.62E-04 | 9.12E-05 |
| Spent solvent, unspecified | treatment | 0 | 2.75E-04 | 0 | 0 | 2.75E-04 | 2.90E-05 |
| Transformer | recycling/reuse | 0 | 0 | 0 | 2.28E-01 | 2.28E-01 | 2.41% |
| Unspecified sludge | landfill | 0 | 5.22E-03 | 0 | 0 | 5.22E-03 | 5.52E-04 |
| Unspecified sludge | recycling/reuse | 0 | 5.56E-03 | 0 | 0 | 5.56E-03 | 5.88E-04 |
| Waste acid (mostly 3% HCl solution) | recycling/reuse | 0 | 3.93E-03 | 0 | 0 | 3.93E-03 | 4.16E-04 |
| Waste Batch (Ba, Pb) (D008 waste) | landfill | 0 | 1.41E-03 | 0 | 0 | 1.41E-03 | 1.50E-04 |
| Waste finishing sludge (Pb) (D008 waste) | landfill | 0 | 2.56E-04 | 0 | 0 | 2.56E-04 | 2.70E-05 |
| Waste oxygenated solvents | treatment | 0 | 9.48E-05 | 0 | 0 | 9.48E-05 | 1.00E-05 |
| Waste water treatment (WWT) filters | landfill | 0 | 3.40E-04 | 0 | 0 | 3.40E-04 | 3.60E-05 |
| **Total hazardous waste** | | 4.89E-02 | 1.13E+00 | 0.00E+00 | 8.28E+00 | 9.46E+00 | 100.00% |

## Table J-7. CRT solid waste outputs (kg/functional unit)

| Material | Disposition | Upstream | Mfg | Use | EOL | Total | % or Fraction of Total |
|---|---|---|---|---|---|---|---|
| abrasive sludge | recycling/reuse | 0 | 4.21E-02 | 0 | 0 | 4.21E-02 | 2.44E-04 |
| acid absorbent | landfill | 0 | 8.13E-05 | 0 | 0 | 8.13E-05 | 4.72E-07 |
| Aluminum (elemental) | landfill | 5.68E-05 | 0 | 0 | 0 | 5.68E-05 | 3.29E-07 |
| Aluminum scrap | recycling/reuse | 0 | 1.82E-04 | 0 | 1.10E-01 | 1.10E-01 | 6.37E-04 |
| Aluminum scrap, Wabash 319 | recycling/reuse | 0 | 5.08E-07 | 0 | 0 | 5.08E-07 | 2.95E-09 |
| Arsenic | landfill | 2.27E-08 | 0 | 0 | 0 | 2.27E-08 | 1.32E-10 |
| Bauxite residues | landfill | 0 | 1.21E-02 | 0 | -2.96E-05 | 1.21E-02 | 7.03E-05 |
| blasting media | landfill | 0 | 3.66E-04 | 0 | 0 | 3.66E-04 | 2.12E-06 |
| Broken CRT glass | recycling/reuse | 0 | 1.08E+00 | 0 | 0 | 1.08E+00 | 0.62% |
| Cables/wires | recycling/reuse | 0 | 8.86E-03 | 0 | 0 | 8.86E-03 | 5.14E-05 |
| Cadmium | landfill | 1.65E-09 | 0 | 0 | 0 | 1.65E-09 | 9.59E-12 |
| Calcium | landfill | 2.27E-04 | 0 | 0 | 0 | 2.27E-04 | 1.32E-06 |
| Carbon | landfill | 1.75E-04 | 0 | 0 | 0 | 1.75E-04 | 1.01E-06 |
| Carbon Steel Scrap | recycling/reuse | 0 | 0 | 0 | 4.10E-01 | 4.10E-01 | 0.24% |
| Cardboard | recycling/reuse | 9.81E-05 | 0 | 0 | 0 | 9.81E-05 | 5.69E-07 |
| Chromium (III) | landfill | 1.42E-07 | 0 | 0 | 0 | 1.42E-07 | 8.23E-10 |
| Chromium (VI) | landfill | 1.42E-07 | 0 | 0 | 0 | 1.42E-07 | 8.23E-10 |
| Coal waste | landfill | 0 | 1.46E+00 | 5.09E+01 | 5.09E-03 | 5.23E+01 | 30.37% |
| Cobalt | landfill | 1.00E-09 | 0 | 0 | 0 | 1.00E-09 | 5.81E-12 |
| Cobalt nitrate | treatment | 0 | 6.10E-05 | 0 | 0 | 6.10E-05 | 3.54E-07 |
| Copper | landfill | 5.01E-09 | 0 | 0 | 0 | 5.01E-09 | 2.91E-11 |
| Copper scrap | recycling/reuse | 0 | 0 | 0 | 6.67E-02 | 6.67E-02 | 3.87E-04 |
| CRT glass, faceplate | landfill | 0 | 2.43E-02 | 0 | 0 | 2.43E-02 | 1.41E-04 |
| CRT glass, faceplate | recycling/reuse | 0 | 0 | 0 | 3.54E-01 | 3.54E-01 | 0.21% |
| Diesel fuel | treatment | 0 | 4.07E-05 | 0 | 0 | 4.07E-05 | 2.36E-07 |
| Dust | treatment | 0 | 3.43E-03 | 0 | 0 | 3.43E-03 | 1.99E-05 |
| Dust/sludge | landfill | 0 | 5.64E-01 | 1.97E+01 | 1.97E-03 | 2.02E+01 | 11.75% |
| EOL CRT Monitor, incinerated | treatment | 0 | 0 | 0 | 3.31E+00 | 3.31E+00 | 1.92% |
| EOL CRT Monitor, landfilled | landfill | 0 | 0 | 0 | 3.91E+00 | 3.91E+00 | 2.27% |
| EOL CRT Monitor, recycled | recycling/reuse | 0 | 0 | 0 | 2.42E+00 | 2.42E+00 | 1.40% |
| EOL CRT Monitor, remanufactured | recycling/reuse | 0 | 0 | 0 | 6.60E-01 | 6.60E-01 | 0.38% |
| Ferric chloride | recycling/reuse | 0 | 3.69E-01 | 0 | 0 | 3.69E-01 | 0.21% |
| FGD sludge | landfill | 0 | 2.14E-01 | 0 | -9.24E-04 | 2.14E-01 | 0.12% |
| flame retardant high-impact polystyrene (HIPS) | recycling/reuse | 0 | 0 | 0 | 4.03E-01 | 4.03E-01 | 0.23% |
| Fly/bottom ash | landfill | 0 | 3.65E-01 | 1.27E+01 | 1.27E-03 | 1.31E+01 | 7.59% |
| Iron | landfill | 1.14E-04 | 0 | 0 | 0 | 1.14E-04 | 6.59E-07 |
| Iron scrap | recycling/reuse | 3.43E-01 | 0 | 0 | 2.50E+00 | 2.85E+00 | 1.65% |
| Lead | landfill | 2.29E-08 | 0 | 0 | 0 | 2.29E-08 | 1.33E-10 |
| Manganese | landfill | 2.27E-06 | 0 | 0 | 0 | 2.27E-06 | 1.32E-08 |
| Mercury | landfill | 1.42E-10 | 0 | 0 | 0 | 1.42E-10 | 8.21E-13 |
| Mineral waste | landfill | 4.42E-01 | 2.61E-03 | 0 | -6.76E-06 | 4.44E-01 | 0.26% |
| Mining waste | landfill | 4.48E-01 | 0 | 0 | -1.90E-06 | 4.48E-01 | 0.26% |
| Mixed industrial (waste) | landfill | 4.87E-02 | 1.00E+00 | 0 | -5.12E-04 | 1.05E+00 | 0.61% |
| Nickel | landfill | 7.50E-09 | 0 | 0 | 0 | 7.50E-09 | 4.35E-11 |
| Nickel nitrate | treatment | 0 | 6.10E-05 | 0 | 0 | 6.10E-05 | 3.54E-07 |
| Nitrogen | landfill | 4.23E-08 | 0 | 0 | 0 | 4.23E-08 | 2.45E-10 |
| Non mineral waste (inert) | landfill | 2.95E-05 | 0 | 0 | 0 | 2.95E-05 | 1.71E-07 |
| Non toxic chemical waste (unspecified) | landfill | 4.07E-03 | 6.11E-04 | 0 | -1.58E-06 | 4.68E-03 | 2.71E-05 |
| Oily rags & filter media | landfill | 0 | 3.25E-04 | 0 | 0 | 3.25E-04 | 1.89E-06 |
| Oily rags & filter media | recycling/reuse | 0 | 4.07E-05 | 0 | 0 | 4.07E-05 | 2.36E-07 |
| parts cleaner solvent | recycling/reuse | 0 | 8.13E-05 | 0 | 0 | 8.13E-05 | 4.72E-07 |

## Table J-7. CRT solid waste outputs (kg/functional unit)

| Material | Disposition | Upstream | Mfg | Use | EOL | Total | % or Fraction of Total |
|---|---|---|---|---|---|---|---|
| Phosphorus (yellow or white) | landfill | 2.90E-06 | 0 | 0 | 0 | 2.90E-06 | 1.68E-08 |
| Plating process sludge | landfill | 0 | 3.28E-04 | 0 | 0 | 3.28E-04 | 1.90E-06 |
| PM | landfill | 0 | 5.33E-04 | 0 | 0 | 5.33E-04 | 3.09E-06 |
| Potassium Carbonate | landfill | 0 | 3.30E-03 | 0 | 0 | 3.30E-03 | 1.91E-05 |
| Printed wiring board (PWB) | recycling/reuse | 0 | 3.70E-02 | 0 | 0 | 3.70E-02 | 2.15E-04 |
| PWB-Drill dust | landfill | 0 | 1.49E-02 | 0 | 0 | 1.49E-02 | 8.67E-05 |
| Sewage sludge (unspecified) | landfill | 6.64E-05 | 0 | 0 | 0 | 6.64E-05 | 3.85E-07 |
| Slag and ash | landfill | 9.65E-02 | 6.66E+01 | 0 | -1.49E+01 | 5.18E+01 | 30.06% |
| Slag and ash | recycling/reuse | 0 | 6.85E-01 | 0 | -3.01E-03 | 6.82E-01 | 0.40% |
| Sludge (aquadag) | landfill | 0 | 2.22E-03 | 0 | 0 | 2.22E-03 | 1.29E-05 |
| sludge (calcium fluoride, CaF2) | recycling/reuse | 0 | 1.75E-02 | 0 | 0 | 1.75E-02 | 1.02E-04 |
| Sludge (phosphor) | landfill | 0 | 4.31E-03 | 0 | 0 | 4.31E-03 | 2.50E-05 |
| Sodium Carbonate | landfill | 0 | 3.29E-03 | 0 | 0 | 3.29E-03 | 1.91E-05 |
| Spent solvents (toluene,xylene,dimethyl formamide,isopropyl alcohol) | recycling/reuse | 0 | 4.17E-02 | 0 | 0 | 4.17E-02 | 2.42E-04 |
| Stannous sludge | recycling/reuse | 6.64E-04 | 0 | 0 | 0 | 6.64E-04 | 3.85E-06 |
| Steel scrap (tinplated) | recycling/reuse | 1.58E-01 | 0 | 0 | 0 | 1.58E-01 | 9.15E-04 |
| Sulfur | landfill | 2.55E-05 | 0 | 0 | 0 | 2.55E-05 | 1.48E-07 |
| Unspecified sludge | landfill | 0 | 7.69E-03 | 0 | 0 | 7.69E-03 | 4.46E-05 |
| Unspecified sludge | recycling/reuse | 0 | 1.26E-01 | 0 | 0 | 1.26E-01 | 7.29E-04 |
| Unspecified solid waste | landfill | 4.94E+00 | 0 | 0 | -7.86E-01 | 4.15E+00 | 2.41% |
| Unspecified solid waste | recycling/reuse | 3.07E+00 | 4.33E-01 | 0 | 0 | 3.50E+00 | 2.03% |
| Unspecified solid waste | treatment | 0 | 3.66E+00 | 0 | 0 | 3.66E+00 | 2.12% |
| Unspecified solid waste (incinerated) | treatment | 4.24E-03 | 1.33E-02 | 0 | -5.82E-05 | 1.75E-02 | 1.01E-04 |
| Unspecified waste | landfill | 0 | 3.38E+00 | 0 | -1.49E-02 | 3.36E+00 | 1.95% |
| Unspecified waste | recycling/reuse | 0 | 0 | 0 | -8.90E-02 | -8.90E-02 | -5.17E-04 |
| Waste alkali (cleaning caustic and alkali soda effluent) | recycling/reuse | 0 | 2.12E-02 | 0 | 0 | 2.12E-02 | 1.23E-04 |
| Waste alkali, unspecified | treatment | 0 | 4.21E-05 | 0 | 0 | 4.21E-05 | 2.44E-07 |
| Waste metals, unspecified | recycling/reuse | 0 | 8.79E-02 | 0 | 0 | 8.79E-02 | 5.10E-04 |
| Waste oil | landfill | 8.15E-05 | 0 | 0 | 0 | 8.15E-05 | 4.73E-07 |
| Waste oil | recycling/reuse | 0 | 1.43E-03 | 0 | 0 | 1.43E-03 | 8.29E-06 |
| Waste oil | treatment | 0 | 9.09E-03 | 0 | 0 | 9.09E-03 | 5.28E-05 |
| Waste Plastic (packing material) | treatment | 0 | 3.01E-02 | 0 | 0 | 3.01E-02 | 1.75E-04 |
| Waste Plastic (styrene foam) | recycling/reuse | 0 | 3.77E-03 | 0 | 0 | 3.77E-03 | 2.19E-05 |
| Waste plastics from CRT monitor | recycling/reuse | 0 | 8.09E-02 | 0 | 0 | 8.09E-02 | 4.70E-04 |
| Waste refractory | landfill | 0 | 2.44E-03 | 0 | 0 | 2.44E-03 | 1.42E-05 |
| Waste water treatment (WWT) sludge | landfill | 0 | 3.43E-01 | 0 | 0 | 3.43E-01 | 0.20% |
| Waste water treatment (WWT) sludge | recycling/reuse | 0 | 3.72E-01 | 0 | 0 | 3.72E-01 | 0.22% |
| Wastepaper | recycling/reuse | 0 | 8.34E-03 | 0 | 0 | 8.34E-03 | 4.84E-05 |
| Wood, average | landfill | 0 | 4.94E-03 | 0 | 0 | 4.94E-03 | 2.87E-05 |
| Zinc (elemental) | landfill | 9.01E-07 | 0 | 0 | 0 | 9.01E-07 | 5.23E-09 |
| **Total solid waste** | | 9.55E+00 | 8.12E+01 | 8.33E+01 | -1.66E+00 | 1.72E+02 | 100.00% |

## Table J-8. CRT radioactive waste outputs (kg/functional unit)

| Material | Disposition | Upstream | Mfg | Use | EOL | Total | % or Fraction of Total |
|---|---|---|---|---|---|---|---|
| Highly radioactive waste (Class C) | landfill | 8.65e-06 | 0 | 0 | 0 | 8.65e-06 | 2.98e-03 |
| Low-level radioactive waste | landfill | 4.11e-04 | 1.38e-04 | 1.76e-03 | 1.76e-07 | 2.31e-03 | 79.47% |
| Radioactive waste (unspecified) | landfill | 1.88e-05 | 0 | 0 | 0 | 1.88e-05 | 6.46e-03 |
| Uranium, depleted | landfill | 0 | 4.15e-05 | 5.27e-04 | 5.27e-08 | 5.69e-04 | 19.59% |
| **Total radioactive waste** | | 4.39e-04 | 1.80e-04 | 2.28e-03 | 2.29e-07 | 2.90e-03 | 100.00% |

## Table J-9. CRT radioactivity outputs (Bq/functional unit)

| Material | Disposition | Upstream | Mfg | Use | EOL | Total | % or Fraction of Total |
|---|---|---|---|---|---|---|---|
| Americium-241 (isotope) | landfill | 3.00e+02 | 0 | 0 | 0 | 3.00e+02 | 3.34e-06 |
| Americium-243 (isotope) | landfill | 6.53e+00 | 0 | 0 | 0 | 6.53e+00 | 7.26e-08 |
| Antimony-124 (isotope) | surface water | 6.75e-02 | 0 | 0 | 0 | 6.75e-02 | 7.52e-10 |
| Antimony-124 (isotope) | treatment | 0 | 6.21e-01 | 7.89e+00 | 7.89e-04 | 8.51e+00 | 9.47e-08 |
| Antimony-125 (isotope) | treatment | 0 | 2.47e+00 | 3.14e+01 | 3.14e-03 | 3.39e+01 | 3.77e-07 |
| Argon-41 (isotope) | air | 0 | 1.26e+03 | 1.60e+04 | 1.60e+00 | 1.72e+04 | 1.92e-04 |
| Barium-140 (isotope) | treatment | 0 | 4.60e-02 | 5.85e-01 | 5.85e-05 | 6.31e-01 | 7.02e-09 |
| Bromine-89 (isotope) | air | 0 | 1.45e-04 | 1.85e-03 | 1.85e-07 | 1.99e-03 | 2.22e-11 |
| Bromine-90 (isotope) | air | 0 | 5.91e-05 | 7.51e-04 | 7.52e-08 | 8.10e-04 | 9.02e-12 |
| Carbon-14 (isotope) | air | 2.97e+01 | 0 | 0 | 0 | 2.97e+01 | 3.31e-07 |
| Cesium-134 (isotope) | air | 1.14e-03 | 3.99e-03 | 5.07e-02 | 5.07e-06 | 5.58e-02 | 6.22e-10 |
| Cesium-134 (isotope) | surface water | 5.94e-02 | 0 | 0 | 0 | 5.94e-02 | 6.61e-10 |
| Cesium-134 (isotope) | treatment | 0 | 1.66e+00 | 2.11e+01 | 2.11e-03 | 2.28e+01 | 2.53e-07 |
| Cesium-135 (isotope) | landfill | 1.46e+05 | 0 | 0 | 0 | 1.46e+05 | 1.63e-03 |
| Cesium-136 (isotope) | treatment | 0 | 1.44e-02 | 9.03e-01 | 9.04e-05 | 9.18e-01 | 1.02e-08 |
| Cesium-137 (isotope) | air | 1.14e-03 | 3.01e-02 | 3.83e-01 | 3.83e-05 | 4.14e-01 | 4.61e-09 |
| Cesium-137 (isotope) | landfill | 4.09e-01 | 0 | 0 | 0 | 4.09e-01 | 4.55e-09 |
| Cesium-137 (isotope) | surface water | 8.71e-02 | 0 | 0 | 0 | 8.71e-02 | 9.69e-10 |
| Cesium-137 (isotope) | treatment | 0 | 2.49e+00 | 3.17e+01 | 3.17e-03 | 3.42e+01 | 3.80e-07 |
| Chromium-51 (isotope) | air | 0 | 7.89e-02 | 1.00e+00 | 1.00e-04 | 1.08e+00 | 1.20e-08 |
| Chromium-51 (isotope) | treatment | 0 | 2.99e+00 | 3.80e+01 | 3.80e-03 | 4.10e+01 | 4.56e-07 |
| Cobalt-57 (isotope) | air | 0 | 2.12e-04 | 2.69e-03 | 2.69e-07 | 2.90e-03 | 3.23e-11 |
| Cobalt-57 (isotope) | treatment | 0 | 7.25e-02 | 9.20e-01 | 9.21e-05 | 9.93e-01 | 1.11e-08 |
| Cobalt-58 (isotope) | air | 1.14e-03 | 5.49e+01 | 3.44e+03 | 3.44e-01 | 3.49e+03 | 3.89e-05 |
| Cobalt-58 (isotope) | surface water | 1.95e-01 | 0 | 0 | 0 | 1.95e-01 | 2.17e-09 |
| Cobalt-58 (isotope) | treatment | 0 | 2.95e+01 | 3.74e+02 | 3.75e-02 | 4.04e+02 | 4.50e-06 |
| Cobalt-60 (isotope) | air | 1.14e-03 | 2.04e-02 | 2.59e-01 | 2.59e-05 | 2.80e-01 | 3.12e-09 |
| Cobalt-60 (isotope) | surface water | 1.22e-01 | 0 | 0 | 0 | 1.22e-01 | 1.36e-09 |
| Cobalt-80 (isotope) | treatment | 0 | 7.74e+00 | 9.83e+01 | 9.83e-03 | 1.06e+02 | 1.18e-06 |
| Curium-244 (isotope) | landfill | 6.08e+02 | 0 | 0 | 0 | 6.08e+02 | 6.77e-06 |
| Curium-245 (isotope) | landfill | 6.78e-02 | 0 | 0 | 0 | 6.78e-02 | 7.55e-10 |
| Iodine-129 (isotope) | landfill | 9.58e-03 | 0 | 0 | 0 | 9.58e-03 | 1.07e-10 |
| Iodine-131 (isotope) | air | 6.67e-03 | 9.51e-02 | 1.21e+00 | 1.21e-04 | 1.31e+00 | 1.46e-08 |
| Iodine-131 (isotope) | surface water | 7.40e-03 | 0 | 0 | 0 | 7.40e-03 | 8.24e-11 |
| Iodine-131 (isotope) | treatment | 0 | 1.38e+00 | 1.75e+01 | 1.75e-03 | 1.89e+01 | 2.10e-07 |
| Iodine-132 (isotope) | air | 0 | 1.93e-02 | 2.45e-01 | 2.46e-05 | 2.65e-01 | 2.95e-09 |
| Iodine-132 (isotope) | treatment | 0 | 5.22e-01 | 6.64e+00 | 6.64e-04 | 7.16e+00 | 7.97e-08 |
| Iodine-133 (isotope) | air | 1.30e-02 | 8.82e+01 | 1.12e+03 | 1.12e-01 | 1.21e+03 | 1.35e-05 |
| Iodine-133 (isotope) | treatment | 0 | 5.91e-01 | 7.51e+00 | 7.52e-04 | 8.10e+00 | 9.02e-08 |
| Iodine-134 (isotope) | air | 0 | 1.00e-01 | 1.27e+00 | 1.27e-04 | 1.37e+00 | 1.53e-08 |
| Iodine-135 (isotope) | air | 0 | 5.03e-03 | 6.39e-02 | 6.39e-06 | 6.89e-02 | 7.67e-10 |
| Iodine-135 (isotope) | treatment | 0 | 4.24e-01 | 5.39e+00 | 5.39e-04 | 5.82e+00 | 6.47e-08 |
| Iron-55 (isotope) | treatment | 0 | 7.05e+00 | 8.95e+01 | 8.96e-03 | 9.66e+01 | 1.07e-06 |
| Iron-59 (isotope) | treatment | 0 | 3.62e-01 | 4.60e+00 | 4.60e-04 | 4.96e+00 | 5.52e-08 |
| Krypton-85 (isotope) | air | 1.73e+02 | 2.08e+03 | 2.65e+04 | 2.65e+00 | 2.87e+04 | 3.20e-04 |
| Krypton-85M (isotope) | air | 0 | 1.01e+02 | 1.28e+03 | 1.28e-01 | 1.38e+03 | 1.54e-05 |
| Krypton-85M (isotope) | treatment | 0 | 1.86e+00 | 2.37e+01 | 2.37e-03 | 2.55e+01 | 2.84e-07 |
| Krypton-87 (isotope) | air | 0 | 3.76e+01 | 4.78e+02 | 4.78e-02 | 5.15e+02 | 5.74e-06 |
| Krypton-88 (isotope) | air | 0 | 1.76e+02 | 2.24e+03 | 2.24e-01 | 2.42e+03 | 2.69e-05 |
| Lanthanum-140 (isotope) | treatment | 0 | 4.93e-02 | 6.26e-01 | 6.26e-05 | 6.75e-01 | 7.52e-09 |

## Table J-9. CRT radioactivity outputs (Bq/functional unit)

| Material | Disposition | Upstream | Mfg | Use | EOL | Total | % or Fraction of Total |
|---|---|---|---|---|---|---|---|
| Lead-210 (isotope) | air | 1.02e+00 | 0 | 0 | 0 | 1.02e+00 | 1.14e-08 |
| Manganese-54 (isotope) | air | 0 | 1.12e-03 | 1.42e-02 | 1.42e-06 | 1.53e-02 | 1.71e-10 |
| Manganese-54 (isotope) | surface water | 9.76e-03 | 0 | 0 | 0 | 9.76e-03 | 1.09e-10 |
| Manganese-54 (isotope) | treatment | 0 | 1.97e+00 | 2.50e+01 | 2.51e-03 | 2.70e+01 | 3.01e-07 |
| Molybdenum-99 (isotope) | treatment | 0 | 3.72e+06 | 4.73e+07 | 4.73e+03 | 5.10e+07 | 56.75% |
| Neptunium-237 (isotope) | landfill | 9.39e+01 | 0 | 0 | 0 | 9.39e+01 | 1.05e-06 |
| Niobium-95 (isotope) | air | 0 | 4.45e-05 | 5.65e-04 | 5.65e-08 | 6.09e-04 | 6.78e-12 |
| Niobium-95 (isotope) | treatment | 0 | 5.08e-01 | 6.45e+00 | 6.45e-04 | 6.96e+00 | 7.74e-08 |
| Palladium-107 (isotope) | landfill | 3.30e-02 | 0 | 0 | 0 | 3.30e-02 | 3.67e-10 |
| Plutonium-239 (isotope) | landfill | 1.14e+05 | 0 | 0 | 0 | 1.14e+05 | 1.26e-03 |
| Plutonium-240 (isotope) | landfill | 1.62e+05 | 0 | 0 | 0 | 1.62e+05 | 1.80e-03 |
| Plutonium-241 (isotope) | landfill | 3.74e+07 | 0 | 0 | 0 | 3.74e+07 | 41.67% |
| Plutonium-242 (isotope) | landfill | 6.10e+02 | 0 | 0 | 0 | 6.10e+02 | 6.79e-06 |
| Polonium-210 (isotope) | air | 1.76e+00 | 0 | 0 | 0 | 1.76e+00 | 1.96e-08 |
| Potassium-40 (isotope) | air | 2.73e-01 | 0 | 0 | 0 | 2.73e-01 | 3.04e-09 |
| Protactinium-234 (isotope) | air | 1.61e-02 | 0 | 0 | 0 | 1.61e-02 | 1.79e-10 |
| Protactinium-234 (isotope) | surface water | 2.98e-01 | 0 | 0 | 0 | 2.98e-01 | 3.32e-09 |
| Radioactive aerosols and halogenes (unspecified) | air | 8.95e-02 | 0 | 0 | 0 | 8.95e-02 | 9.96e-10 |
| radioactive gas (unspecified) | air | 2.86e+03 | 0 | 0 | 0 | 2.86e+03 | 3.18e-05 |
| Radioactive substance (unspecified) | air | 8.69e+02 | 9.19e+02 | 0 | -2.38e+00 | 1.79e+03 | 1.99e-05 |
| Radioactive substance (unspecified) | surface water | 1.61e+01 | 8.52e+00 | 0 | -2.21e-02 | 2.46e+01 | 2.73e-07 |
| Radium-222 (isotope) | air | 1.04e+01 | 0 | 0 | 0 | 1.04e+01 | 1.16e-07 |
| Radium-224 (isotope) | surface water | 9.67e-01 | 0 | 0 | 0 | 9.67e-01 | 1.08e-08 |
| Radium-226 (isotope) | air | 1.37e+00 | 0 | 0 | 0 | 1.37e+00 | 1.53e-08 |
| Radium-226 (isotope) | landfill | 6.35e+02 | 0 | 0 | 0 | 6.35e+02 | 7.07e-06 |
| Radium-226 (isotope) | surface water | 5.73e+02 | 0 | 0 | 0 | 5.73e+02 | 6.38e-06 |
| Radium-228 (isotope) | air | 1.35e-01 | 0 | 0 | 0 | 1.35e-01 | 1.50e-09 |
| Radium-228 (isotope) | surface water | 1.93e+00 | 0 | 0 | 0 | 1.93e+00 | 2.15e-08 |
| Radon-220 (isotope) | air | 3.17e+00 | 0 | 0 | 0 | 3.17e+00 | 3.53e-08 |
| Radon-222 (isotope) | air | 1.37e+05 | 0 | 0 | 0 | 1.37e+05 | 1.52e-03 |
| Rubidium-88 (isotope) | air | 0 | 4.13e-01 | 5.25e+00 | 5.25e-04 | 5.66e+00 | 6.30e-08 |
| Ruthenium-103 (isotope) | treatment | 0 | 6.21e-02 | 7.89e-01 | 7.89e-05 | 8.51e-01 | 9.47e-09 |
| Samarium-151 (isotope) | landfill | 1.35e+02 | 0 | 0 | 0 | 1.35e+02 | 1.50e-06 |
| Selenium-79 (isotope) | landfill | 1.05e-01 | 0 | 0 | 0 | 1.05e-01 | 1.17e-09 |
| Silver-110M (isotope) | air | 0 | 1.33e-06 | 1.68e-05 | 1.68e-09 | 1.82e-05 | 2.02e-13 |
| Silver-110M (isotope) | surface water | 2.93e-01 | 0 | 0 | 0 | 2.93e-01 | 3.26e-09 |
| Silver-110M (isotope) | treatment | 0 | 7.25e-01 | 9.20e+00 | 9.21e-04 | 9.93e+00 | 1.11e-07 |
| Sodium-24 (isotope) | treatment | 0 | 1.10e-01 | 1.40e+00 | 1.40e-04 | 1.51e+00 | 1.68e-08 |
| Strontium-89 (isotope) | treatment | 0 | 1.19e-01 | 1.52e+00 | 1.52e-04 | 1.63e+00 | 1.82e-08 |
| Strontium-90 (isotope) | landfill | 2.18e+04 | 0 | 0 | 0 | 2.18e+04 | 2.43e-04 |
| Strontium-90 (isotope) | treatment | 0 | 2.80e-02 | 3.56e-01 | 3.56e-05 | 3.84e-01 | 4.28e-09 |
| Strontium-95 (isotope) | treatment | 0 | 3.09e-01 | 3.93e+00 | 3.93e-04 | 4.23e+00 | 4.71e-08 |
| Sulfur-136 (isotope) | treatment | 0 | 6.65e-02 | 8.45e-01 | 8.46e-05 | 9.12e-01 | 1.01e-08 |
| Technetium-99M (isotope) | air | 0 | 5.96e-06 | 7.57e-05 | 7.58e-09 | 8.17e-05 | 9.10e-13 |
| Technetium-99M (isotope) | landfill | 4.46e+00 | 0 | 0 | 0 | 4.46e+00 | 4.97e-08 |
| Technetium-99M (isotope) | treatment | 0 | 4.33e-02 | 5.50e-01 | 5.50e-05 | 5.93e-01 | 6.60e-09 |
| Thorium-228 (isotope) | air | 1.14e-01 | 0 | 0 | 0 | 1.14e-01 | 1.27e-09 |
| Thorium-228 (isotope) | surface water | 3.87e+00 | 0 | 0 | 0 | 3.87e+00 | 4.30e-08 |
| Thorium-230 (isotope) | air | 2.33e-01 | 0 | 0 | 0 | 2.33e-01 | 2.59e-09 |

## Table J-9. CRT radioactivity outputs (Bq/functional unit)

| Material | Disposition | Upstream | Mfg | Use | EOL | Total | % or Fraction of Total |
|---|---|---|---|---|---|---|---|
| Thorium-230 (isotope) | landfill | 6.35e+02 | 0 | 0 | 0 | 6.35e+02 | 7.07e-06 |
| Thorium-230 (isotope) | surface water | 2.79e+01 | 0 | 0 | 0 | 2.79e+01 | 3.10e-07 |
| Thorium-232 (isotope) | air | 7.28e-02 | 0 | 0 | 0 | 7.28e-02 | 8.10e-10 |
| Thorium-234 (isotope) | air | 1.61e-02 | 0 | 0 | 0 | 1.61e-02 | 1.79e-10 |
| Thorium-234 (isotope) | surface water | 2.98e-01 | 0 | 0 | 0 | 2.98e-01 | 3.32e-09 |
| Tin-113 (isotope) | treatment | 0 | 6.85e-02 | 8.70e-01 | 8.71e-05 | 9.39e-01 | 1.04e-08 |
| Tin-126 (isotope) | landfill | 1.84e-01 | 0 | 0 | 0 | 1.84e-01 | 2.05e-09 |
| Tritium-3 (isotope) | air | 3.47e+02 | 2.95e+03 | 3.74e+04 | 3.75e+00 | 4.07e+04 | 4.53e-04 |
| Tritium-3 (isotope) | surface water | 3.56e+03 | 0 | 0 | 0 | 3.56e+03 | 3.96e-05 |
| Tritium-3 (isotope) | treatment | 0 | 2.20e+04 | 2.80e+05 | 2.80e+01 | 3.02e+05 | 3.36e-03 |
| Uranium-234 (isotope) | air | 4.07e-01 | 0 | 0 | 0 | 4.07e-01 | 4.53e-09 |
| Uranium-234 (isotope) | landfill | 4.82e+02 | 0 | 0 | 0 | 4.82e+02 | 5.36e-06 |
| Uranium-234 (isotope) | surface water | 9.84e+00 | 0 | 0 | 0 | 9.84e+00 | 1.10e-07 |
| Uranium-235 (isotope) | air | 3.04e-03 | 0 | | | 3.04e-03 | 3.38e-11 |
| Uranium-235 (isotope) | landfill | 8.69e+00 | 0 | 0 | 0 | 8.69e+00 | 9.67e-08 |
| Uranium-235 (isotope) | surface water | 4.27e-01 | 0 | 0 | 0 | 4.27e-01 | 4.75e-09 |
| Uranium-238 (isotope) | air | 6.69e-01 | 0 | 0 | 0 | 6.69e-01 | 7.44e-09 |
| Uranium-238 (isotope) | landfill | 1.35e+02 | 0 | 0 | 0 | 1.35e+02 | 1.50e-06 |
| Uranium-238 (isotope) | surface water | 9.23e+00 | 0 | 0 | 0 | 9.23e+00 | 1.03e-07 |
| Xenon-131M (isotope) | air | 0 | 1.70e+02 | 2.16e+03 | 2.16e-01 | 2.33e+03 | 2.59e-05 |
| Xenon-131M (isotope) | treatment | 0 | 2.27e+01 | 2.88e+02 | 2.88e-02 | 3.11e+02 | 3.46e-06 |
| Xenon-133 (isotope) | air | 2.43e+03 | 6.28e+03 | 3.12e+05 | 3.12e+01 | 3.21e+05 | 3.57e-03 |
| Xenon-133 (isotope) | treatment | 0 | 3.48e+03 | 4.43e+04 | 4.43e+00 | 4.78e+04 | 5.31e-04 |
| Xenon-133M (isotope) | air | 0 | 1.99e+04 | 2.07e+04 | 2.07e+00 | 4.06e+04 | 4.52e-04 |
| Xenon-133M (isotope) | treatment | 0 | 2.85e+01 | 3.62e+02 | 3.63e-02 | 3.91e+02 | 4.35e-06 |
| Xenon-135 (isotope) | air | 0 | 9.27e+02 | 1.18e+04 | 1.18e+00 | 1.27e+04 | 1.41e-04 |
| Xenon-135 (isotope) | treatment | 0 | 2.60e+01 | 3.30e+02 | 3.30e-02 | 3.56e+02 | 3.96e-06 |
| Xenon-135M (isotope) | air | 0 | 1.77e+01 | 2.25e+02 | 2.25e-02 | 2.42e+02 | 2.70e-06 |
| Xenon-138 (isotope) | air | 0 | 5.87e+01 | 7.45e+02 | 7.45e-02 | 8.04e+02 | 8.95e-06 |
| Zinc-85 (isotope) | treatment | 0 | 3.33e-02 | 4.23e-01 | 4.23e-05 | 4.56e-01 | 5.07e-09 |
| Zirconium-93 (isotope) | landfill | 5.87e-01 | 0 | 0 | 0 | 5.87e-01 | 6.53e-09 |
| Zirconium-95 (isotope) | air | 0 | 1.15e-04 | 1.46e-03 | 1.46e-07 | 1.57e-03 | 1.75e-11 |
| **Total radioactivity outputs** | | 3.80e+07 | 3.78e+06 | 4.80e+07 | 4.80e+03 | 8.98e+07 | 100.00% |

## Table J-10. LCD primary material inputs (kg/functional unit)

| Material | Upstream | Mfg | Use | EOL | Total | % or Fraction of Total |
|---|---|---|---|---|---|---|
| 1,4-butanolide | 0 | 4.06e-04 | 0 | 0 | 4.06E-04 | 1.12E-06 |
| 15" LCD light guide | 0 | 3.74e-01 | 0 | 0 | 3.74E-01 | 1.03E-03 |
| 1-methyl-2-pyrrolidinone | 0 | 4.06e-04 | 0 | 0 | 4.06E-04 | 1.12E-06 |
| 2-(2-butoxyethoxy)-ethanol acetate | 0 | 8.08e-06 | 0 | 0 | 8.08E-06 | 2.23E-08 |
| 3,4,5-trifluorobromobenzene | 0 | 2.64e-04 | 0 | 0 | 2.64E-04 | 7.29E-07 |
| 3,4-difluorobromobenzene | 0 | 3.65e-04 | 0 | 0 | 3.65E-04 | 1.01E-06 |
| 4-4(-propylcyclohexyl)cyclohexanone | 0 | 2.18e-04 | 0 | 0 | 2.18E-04 | 6.00E-07 |
| 4-bromophenol | 0 | 3.27e-04 | 0 | 0 | 3.27E-04 | 9.00E-07 |
| 4-ethylphenol | 0 | 7.00e-05 | 0 | 0 | 7.00E-05 | 1.93E-07 |
| 4-pentylphenol | 0 | 3.42e-04 | 0 | 0 | 3.42E-04 | 9.43E-07 |
| 4-propionylphenol | 0 | 1.94e-04 | 0 | 0 | 1.94E-04 | 5.36E-07 |
| AlNd | 0 | 2.97e-05 | 0 | 0 | 2.97E-05 | 8.18E-08 |
| Aluminum (elemental) | 0 | 1.34e-01 | 0 | 0 | 1.34E-01 | 3.70E-04 |
| Argon | 0 | 3.53e-05 | 0 | 0 | 3.53E-05 | 9.74E-08 |
| Assembled 15" LCD backlight unit | 0 | 1.48e+00 | 0 | 0 | 1.48E+00 | 4.07E-03 |
| Assembled LCD monitor | 0 | 0 | 6.50E+00 | 0 | 6.50E+00 | 1.79% |
| Backlight lamp (CCFL) | 0 | 1.94e-03 | 0 | 0 | 1.94E-03 | 5.34E-06 |
| Barium Carbonate | 0 | 1.37e-02 | 0 | 0 | 1.37E-02 | 3.79E-05 |
| Bauxite (Al2O3, ore) | 0 | 5.09e-01 | 0 | 0 | 5.09E-01 | 1.40E-03 |
| Cables/wires | 0 | 2.34e-01 | 0 | 0 | 2.34E-01 | 6.45E-04 |
| Coal, average (in ground) | 1.72E+00 | 8.03E+00 | 6.69E+01 | 1.27E-02 | 7.67E+01 | 21.15% |
| Fuel oil #4 | 0 | 0 | 0 | -6.18E-02 | -6.18E-02 | -1.70E-04 |
| Glass, unspecified | 0 | 4.37E-02 | 0 | 0 | 4.37E-02 | 1.20E-04 |
| Glycol ethers | 0 | 4.06E-04 | 0 | 0 | 4.06E-04 | 1.12E-06 |
| Indium tin oxide | 0 | 5.26E-04 | 0 | 0 | 5.26E-04 | 1.45E-06 |
| Iron (Fe, ore) | 3.26E+00 | 0 | 0 | 0 | 3.26E+00 | 8.98E-03 |
| Iron scrap | 4.63E-01 | 0 | 0 | 0 | 4.63E-01 | 1.28E-03 |
| LCD front glass (with color filters) | 0 | 1.78E-01 | 0 | 0 | 1.78E-01 | 4.92E-04 |
| LCD glass | 0 | 4.52E-01 | 0 | 0 | 4.52E-01 | 1.25E-03 |
| LCD material (confidential) | 0 | 3.11E-04 | 0 | 0 | 3.11E-04 | 8.56E-07 |
| LCD module | 0 | 1.18E+00 | 0 | 0 | 1.18E+00 | 3.26E-03 |
| LCD spacers, unspecified | 0 | 1.69E-05 | 0 | 0 | 1.69E-05 | 4.66E-08 |
| Liquid crystals, for 15" LCD | 0 | 1.24E-03 | 0 | 0 | 1.24E-03 | 3.43E-06 |
| Mercury | 0 | 3.99E-06 | 0 | 0 | 3.99E-06 | 1.10E-08 |
| Metals, remaining unspeciated | 0 | 6.81E-04 | 0 | 0 | 6.81E-04 | 1.88E-06 |
| Mild fiber | 0 | 7.34E-07 | 0 | 0 | 7.34E-07 | 2.02E-09 |
| Molybdenum | 0 | 1.78E-04 | 0 | 0 | 1.78E-04 | 4.92E-07 |
| MoW | 0 | 9.09E-04 | 0 | 0 | 9.09E-04 | 2.51E-06 |
| Natural gas | 0 | 4.22E+00 | 5.22E+00 | -5.75E-02 | 9.39E+00 | 2.59% |
| Natural gas (in ground) | 2.29E+02 | 5.16E+00 | 0 | -1.08E+00 | 2.33E+02 | 64.25% |
| Neon | 0 | 6.31E-05 | 0 | 0 | 6.31E-05 | 1.74E-07 |
| Petroleum (in ground) | 7.09E-01 | 2.23E+01 | 1.42E+00 | -1.00E+00 | 2.34E+01 | 6.45% |
| Pigment color resist, unspecified | 0 | 3.72E-02 | 0 | 0 | 3.72E-02 | 1.03E-04 |
| Polarizer | 0 | 4.07E-02 | 0 | 0 | 4.07E-02 | 1.12E-04 |
| Poly(methyl methacrylate) | 0 | 3.83E-01 | 0 | 0 | 3.83E-01 | 1.06E-03 |
| Polycarbonate resin | 0 | 5.16E-01 | 0 | 0 | 5.16E-01 | 1.42E-03 |
| Polyester adhesive | 0 | 6.25E-04 | 0 | 0 | 6.25E-04 | 1.72E-06 |
| Polyethylene terephthalate | 0 | 5.88E-02 | 0 | 0 | 5.88E-02 | 1.62E-04 |
| Polyimide alignment layer, unspecified | 0 | 4.86E-04 | 0 | 0 | 4.86E-04 | 1.34E-06 |
| Polyvinyl alcohol | 0 | 8.61E-03 | 0 | 0 | 8.61E-03 | 2.37E-05 |

## Table J-10. LCD primary material inputs (kg/functional unit)

| Material | Upstream | Mfg | Use | EOL | Total | % or Fraction of Total |
|---|---|---|---|---|---|---|
| Potassium Carbonate | 0 | 1.75E-02 | 0 | 0 | 1.75E-02 | 4.83E-05 |
| PPE | 0 | 3.00E-01 | 0 | 0 | 3.00E-01 | 8.27E-04 |
| Printed wiring board (PWB) | 0 | 3.74E-01 | 0 | 0 | 3.74E-01 | 1.03E-03 |
| PWB-laminate | 0 | 3.74E-01 | 0 | 0 | 3.74E-01 | 1.03E-03 |
| Recycled LCD glass | 0 | 9.54E-02 | 0 | 0 | 9.54E-02 | 2.63E-04 |
| Rubber, unspecified | 0 | 6.01E-04 | 0 | 0 | 6.01E-04 | 1.66E-06 |
| Sand | 0 | 1.11E-01 | 0 | 0 | 1.11E-01 | 3.07E-04 |
| Sodium Carbonate | 0 | 2.26E-02 | 0 | 0 | 2.26E-02 | 6.23E-05 |
| Solder (60% tin, 40% lead) | 0 | 3.81E-02 | 0 | 0 | 3.81E-02 | 1.05E-04 |
| Solder (63% tin; 37% lead) | 0 | 2.24E-02 | 0 | 0 | 2.24E-02 | 6.18E-05 |
| Steel | 0 | 2.53E+00 | 0 | 0 | 2.53E+00 | 6.97E-03 |
| Strontium Carbonate | 0 | 1.53E-02 | 0 | 0 | 1.53E-02 | 4.23E-05 |
| Styrene-butadiene copolymers | 0 | 3.62E-01 | 0 | 0 | 3.62E-01 | 9.97E-04 |
| Titanium | 0 | 1.33E-04 | 0 | 0 | 1.33E-04 | 3.67E-07 |
| Triallyl isocyanurate | 0 | 1.54E-05 | 0 | 0 | 1.54E-05 | 4.26E-08 |
| Triphenyl phosphate | 0 | 9.25E-02 | 0 | 0 | 9.25E-02 | 2.55E-04 |
| Unspecified LCD material | 0 | 1.19E-04 | 0 | 0 | 1.19E-04 | 3.29E-07 |
| Uranium, yellowcake | 0 | 1.03E-03 | 1.81E-03 | 3.4352E-07 | 2.84E-03 | 7.84E-06 |
| Zircon Sand | 0 | 1.31E-03 | 0 | 0 | 1.31E-03 | 3.62E-06 |
| Total primary inputs | 2.35E+02 | 4.97E+01 | 8.01E+01 | -2.19E+00 | 3.63E+02 | 100.00% |

## Table J-11. LCD ancillary material inputs (kg/functional unit)

| Material | Upstream | Mfg | Use | EOL | Total | % or Fraction of Total |
|---|---|---|---|---|---|---|
| 1,4-butanolide | 0 | 4.04e-05 | 0 | 0 | 4.04e-05 | 1.94e-07 |
| 1-Methoxy-2-propanol | 0 | 1.10e-02 | 0 | 0 | 1.10e-02 | 5.27e-05 |
| 2-(2-butoxyethoxy)-ethanol | 0 | 3.04e-02 | 0 | 0 | 3.04e-02 | 1.46e-04 |
| 2,2,4-trimethylpentane | 0 | 1.52e-05 | 0 | 0 | 1.52e-05 | 7.32e-08 |
| 2-ethoxyl ethylacetate | 0 | 1.78e-03 | 0 | 0 | 1.78e-03 | 8.53e-06 |
| Acetic acid | 0 | 6.40e-03 | 0 | 0 | 6.40e-03 | 3.07e-05 |
| Acetone | 0 | 1.56e-01 | 0 | 0 | 1.56e-01 | 7.50e-04 |
| Al-etchant, unspecified | 0 | 5.88e-03 | 0 | 0 | 5.88e-03 | 2.83e-05 |
| Aluminum Oxide | 0 | 1.56e-03 | 0 | 0 | 1.56e-03 | 7.50e-06 |
| Aluminum sulfate | 3.63e-04 | 1.05e-01 | 0 | 0 | 1.05e-01 | 5.04e-04 |
| Ammonia | 0 | 1.55e-02 | 0 | 0 | 1.55e-02 | 7.46e-05 |
| Ammonium bifluoride | 0 | 2.36e-03 | 0 | 0 | 2.36e-03 | 1.13e-05 |
| Ammonium chloride | 0 | 3.42e-02 | 0 | 0 | 3.42e-02 | 1.64e-04 |
| Ammonium fluoride | 0 | 1.14e-02 | 0 | 0 | 1.14e-02 | 5.48e-05 |
| Ammonium hydroxide | 0 | 3.42e-02 | 0 | 0 | 3.42e-02 | 1.64e-04 |
| Argon | 0 | 7.87e-03 | 0 | 0 | 7.87e-03 | 3.78e-05 |
| Barium sulfate | 9.64e-04 | 0 | 0 | 0 | 9.64e-04 | 4.63e-06 |
| Bauxite | 2.10e-04 | 0 | 0 | 0 | 2.10e-04 | 1.01e-06 |
| Bauxite (Al2O3, ore) | 5.59e-04 | 2.16e-03 | 0 | -7.63e-05 | 2.64e-03 | 1.27e-05 |
| Bentonite (in ground) | 1.00e-03 | 0 | 0 | 0 | 1.00e-03 | 4.82e-06 |
| Borax | 0 | 9.13e-05 | 0 | 0 | 9.13e-05 | 4.39e-07 |
| Calcium hydroxide | 0 | 1.39e-01 | 0 | 0 | 1.39e-01 | 6.67e-04 |
| Calcium sulfate | 7.37e-06 | 0 | 0 | 0 | 7.37e-06 | 3.54e-08 |
| Calcium sulfate (CaSO4, ore) | 9.75e-06 | 0 | 0 | 0 | 9.75e-06 | 4.68e-08 |
| Carbon dioxide | 0 | 4.86e-03 | 0 | 0 | 4.86e-03 | 2.33e-05 |
| Cerium Oxide | 0 | 1.52e-04 | 0 | 0 | 1.52e-04 | 7.29e-07 |
| Chlorine | 0 | 1.55e-02 | 0 | 0 | 1.55e-02 | 7.46e-05 |
| Chromium ore | 1.79e-08 | 0 | 0 | 0 | 1.79e-08 | 8.59e-11 |
| Chromium Oxide | 0 | 2.60e-06 | 0 | 0 | 2.60e-06 | 1.25e-08 |
| Clay (in ground) | 1.30e-03 | 0 | 0 | 1.69e+00 | 1.69e+00 | 8.12e-03 |
| Cleaner, unspecified | 0 | 1.47e-04 | 0 | 0 | 1.47e-04 | 7.05e-07 |
| Coal, average (in ground) | 0 | 0 | 0 | 7.38e-04 | 7.38e-04 | 3.54e-06 |
| Copper (Cu, ore) | 2.63e-04 | 0 | 0 | 0 | 2.63e-04 | 1.26e-06 |
| Cresol-formaldehyde resin | 0 | 8.29e-04 | 0 | 0 | 8.29e-04 | 3.98e-06 |
| Cr-etchant, unspecified | 0 | 1.77e-02 | 0 | 0 | 1.77e-02 | 8.49e-05 |
| Cyclohexane | 0 | 3.91e-03 | 0 | 0 | 3.91e-03 | 1.88e-05 |
| Deoiling agent (unspecified) | 6.53e-04 | 0 | 0 | 0 | 6.53e-04 | 3.14e-06 |
| Developing solution, unspecified | 0 | 4.00e-02 | 0 | 0 | 4.00e-02 | 1.92e-04 |
| Diethyl ether | 0 | 9.28e-05 | 0 | 0 | 9.28e-05 | 4.46e-07 |
| Diluent, unspecified | 0 | 8.27e-03 | 0 | 0 | 8.27e-03 | 3.97e-05 |
| Dimethylsulfoxide | 0 | 6.63e-02 | 0 | 0 | 6.63e-02 | 3.18e-04 |
| Dioctyl Sebacate | 1.14e-04 | 0 | 0 | 0 | 1.14e-04 | 5.47e-07 |
| Dolomite (in ground) | 2.08e-03 | 0 | 0 | 0 | 2.08e-03 | 9.98e-06 |
| Ethanol | 0 | 2.53e-02 | 0 | 0 | 2.53e-02 | 1.21e-04 |
| Ethanol amine | 0 | 7.85e-02 | 0 | 0 | 7.85e-02 | 3.77e-04 |
| Ethylacetate | 0 | 9.68e-04 | 0 | 0 | 9.68e-04 | 4.65e-06 |
| Etoxy Naphtol Sulphonic Acid (ENSA) | 4.88e-05 | 0 | 0 | 0 | 4.88e-05 | 2.34e-07 |
| Exfoliation liquid, unspecified | 0 | 1.43e-02 | 0 | 0 | 1.43e-02 | 6.86e-05 |
| Explosive (unspecified) | 9.77e-05 | 0 | 0 | 0 | 9.77e-05 | 4.69e-07 |

## Table J-11. LCD ancillary material inputs (kg/functional unit)

| Material | Upstream | Mfg | Use | EOL | Total | % or Fraction of Total |
|---|---|---|---|---|---|---|
| Ferric chloride | 0 | 8.92e-03 | 0 | 0 | 8.92e-03 | 4.28e-05 |
| Ferromanganese (Fe, Mn, C) | 3.83e-07 | 0 | 0 | 0 | 3.83e-07 | 1.84e-09 |
| Fluorocarbon resin | 0 | 3.38e-06 | 0 | 0 | 3.38e-06 | 1.63e-08 |
| Fluorspar (CaF2, ore) | 5.37e-06 | 0 | 0 | 0 | 5.37e-06 | 2.58e-08 |
| Flux, unspecified | 0 | 7.35e-05 | 0 | 0 | 7.35e-05 | 3.53e-07 |
| Formaldehyde | 0 | 2.91e-03 | 0 | 0 | 2.91e-03 | 1.40e-05 |
| Glycol ethers | 0 | 3.16e-02 | 0 | 0 | 3.16e-02 | 1.52e-04 |
| Gravel | 9.08e-08 | 0 | 0 | 0 | 9.08e-08 | 4.36e-10 |
| Gravel/Sand | 1.01e-03 | 0 | 0 | 0 | 1.01e-03 | 4.85e-06 |
| HCFC-225ca | 0 | 1.37e-04 | 0 | 0 | 1.37e-04 | 6.57e-07 |
| HCFC-225cb | 0 | 1.37e-04 | 0 | 0 | 1.37e-04 | 6.57e-07 |
| Helium | 0 | 6.18e-04 | 0 | 0 | 6.18e-04 | 2.97e-06 |
| Heptane | 0 | 1.03e-02 | 0 | 0 | 1.03e-02 | 4.93e-05 |
| Hexamethyldisilizane | 0 | 2.58e-04 | 0 | 0 | 2.58e-04 | 1.24e-06 |
| Hydrochloric acid | 0 | 1.29e-01 | 0 | 0 | 1.29e-01 | 6.21e-04 |
| Hydrofluoric acid | 0 | 4.58e-02 | 0 | 0 | 4.58e-02 | 2.20e-04 |
| Hydrogen | 0 | 4.44e-01 | 0 | 0 | 4.44e-01 | 2.13e-03 |
| Hydrogen peroxide | 0 | 1.38e-02 | 0 | 0 | 1.38e-02 | 6.65e-05 |
| Iron (Fe, ore) | 7.65e-03 | 0 | 0 | 7.04e-04 | 8.35e-03 | 4.01e-05 |
| Iron sulfate (FeSO4, ore) | 7.99e-06 | 0 | 0 | 0 | 7.99e-06 | 3.84e-08 |
| Isopropyl alcohol | 0 | 3.49e-01 | 0 | 0 | 3.49e-01 | 1.67e-03 |
| ITO etchant, unspecified | 0 | 2.94e-03 | 0 | 0 | 2.94e-03 | 1.41e-05 |
| Krypton | 0 | 2.58e-05 | 0 | 0 | 2.58e-05 | 1.24e-07 |
| Lead (Pb, ore) | 2.47e-05 | 0 | 0 | 0 | 2.47e-05 | 1.19e-07 |
| Lime | 0 | 4.74e-02 | 3.95e-01 | 7.49e-05 | 4.42e-01 | 2.12e-03 |
| Limestone | 0 | 1.08e-01 | 8.99e-01 | 1.71e-04 | 1.01e+00 | 4.84e-03 |
| Limestone (CaCO3, in ground) | 5.07e-01 | 5.49e-02 | 0 | -1.55e-01 | 4.06e-01 | 1.95e-03 |
| LNG | 0 | 1.94e+02 | 0 | 0 | 1.94e+02 | 9.32e-01 |
| Lubricant (unspecified) | 2.02e-02 | 0 | 0 | 0 | 2.02e-02 | 9.68e-05 |
| Manganese (Mn, ore) | 1.04e-08 | 0 | 0 | 0 | 1.04e-08 | 5.00e-11 |
| Methyl ethyl ketone | 0 | 4.91e-04 | 0 | 0 | 4.91e-04 | 2.36e-06 |
| Monosilane | 0 | 1.12e-03 | 0 | 0 | 1.12e-03 | 5.40e-06 |
| Natural gas (in ground) | 0 | 0 | 0 | 1.09e-03 | 1.09e-03 | 5.22e-06 |
| N-Butylacetate | 0 | 3.83e-02 | 0 | 0 | 3.83e-02 | 1.84e-04 |
| Nickel (Ni, ore) | 6.05e-09 | 0 | 0 | 0 | 6.05e-09 | 2.91e-11 |
| Nitric acid | 0 | 7.23e-02 | 0 | 0 | 7.23e-02 | 3.47e-04 |
| Nitric acid second cerium ammonium | 0 | 1.13e-02 | 0 | 0 | 1.13e-02 | 5.43e-05 |
| Nitrogen | 0 | 6.02e+00 | 0 | 0 | 6.02e+00 | 2.89e-02 |
| Nitrogen fluoride | 0 | 1.08e-01 | 0 | 0 | 1.08e-01 | 5.19e-04 |
| Nitrous oxide | 0 | 1.36e-03 | 0 | 0 | 1.36e-03 | 6.51e-06 |
| Oil (in ground) | 0 | 0 | 0 | 8.06e-03 | 8.06e-03 | 3.87e-05 |
| Olivine | 2.72e-07 | 0 | 0 | 0 | 2.72e-07 | 1.31e-09 |
| Olivine ore | 7.92e-06 | 0 | 0 | 0 | 7.92e-06 | 3.80e-08 |
| Orthoboric acid | 0 | 7.30e-04 | 0 | 0 | 7.30e-04 | 3.51e-06 |
| Oxygen | 0 | 7.75e-03 | 0 | 0 | 7.75e-03 | 3.72e-05 |
| Perchloric acid | 0 | 3.82e-03 | 0 | 0 | 3.82e-03 | 1.84e-05 |
| Perfluoromethane | 0 | 1.29e-03 | 0 | 0 | 1.29e-03 | 6.18e-06 |
| Phenolsulphonic Acid | 1.53e-03 | 0 | 0 | 0 | 1.53e-03 | 7.34e-06 |
| Phosphine | 0 | 2.69e-02 | 0 | 0 | 2.69e-02 | 1.29e-04 |

## Table J-11. LCD ancillary material inputs (kg/functional unit)

| Material | Upstream | Mfg | Use | EOL | Total | % or Fraction of Total |
|---|---|---|---|---|---|---|
| Phosphoric acid | 0 | 3.95e-02 | 0 | 0 | 3.95e-02 | 1.90e-04 |
| Photoresist, unspecified | 0 | 1.68e-02 | 0 | 0 | 1.68e-02 | 8.05e-05 |
| Polyaluminum chloride | 0 | 6.40e-03 | 0 | 0 | 6.40e-03 | 3.07e-05 |
| Polyethylene glycol | 0 | 2.23e-02 | 0 | 0 | 2.23e-02 | 1.07e-04 |
| Polyethylene mono(nonylphenyl) ether glycol | 0 | 3.40e-04 | 0 | 0 | 3.40e-04 | 1.63e-06 |
| Polyethylene terephthalate | 0 | 3.20e-02 | 0 | 0 | 3.20e-02 | 1.53e-04 |
| Polyimide, unspecified | 0 | 2.94e-05 | 0 | 0 | 2.94e-05 | 1.41e-07 |
| Potassium chloride (KCl, as K2O, in ground) | 3.03e-05 | 0 | 0 | 0 | 3.03e-05 | 1.45e-07 |
| Potassium hydroxide | 0 | 1.88e-02 | 0 | 0 | 1.88e-02 | 9.04e-05 |
| Potassium permanganate | 0 | 5.14e-04 | 0 | 0 | 5.14e-04 | 2.47e-06 |
| Potassium peroxymonosulfate | 0 | 3.12e-02 | 0 | 0 | 3.12e-02 | 1.50e-04 |
| Process material for backlight assembly | 0 | 7.03e-05 | 0 | 0 | 7.03e-05 | 3.37e-07 |
| Propylene glycol | 0 | 4.46e-03 | 0 | 0 | 4.46e-03 | 2.14e-05 |
| Propylene glycol monomethyl ether acetate | 0 | 1.56e-02 | 0 | 0 | 1.56e-02 | 7.50e-05 |
| Pumice | 0 | 3.64e-03 | 0 | 0 | 3.64e-03 | 1.75e-05 |
| PWB-solder mask solids | 0 | 1.93e-02 | 0 | 0 | 1.93e-02 | 9.25e-05 |
| Pyrite (FeS2, ore) | 3.77e-02 | 0 | 0 | 0 | 3.77e-02 | 1.81e-04 |
| Raw materials (unspecified) | 4.06e-03 | 0 | 0 | 0 | 4.06e-03 | 1.95e-05 |
| Rinse, unspecified | 0 | 5.27e-02 | 0 | 0 | 5.27e-02 | 2.53e-04 |
| Sand (in ground) | 9.55e-03 | 1.32e-03 | 0 | 5.60e-01 | 5.71e-01 | 2.74e-03 |
| Silver (Ag, ore) | 4.51e-10 | 0 | 0 | 0 | 4.51e-10 | 2.17e-12 |
| Sodium Carbonate | 0 | 1.42e-02 | 0 | 0 | 1.42e-02 | 6.82e-05 |
| Sodium chloride (NaCl, in ground or in sea) | 4.37e-01 | 6.08e-04 | 0 | 1.08e-05 | 4.38e-01 | 2.10e-03 |
| Sodium Dichromate | 1.29e-04 | 0 | 0 | 0 | 1.29e-04 | 6.19e-07 |
| Sodium dihydrogen phosphate dihydrate | 0 | 4.06e-06 | 0 | 0 | 4.06e-06 | 1.95e-08 |
| Sodium hydroxide | 0 | 4.45e-01 | 0 | 0 | 4.45e-01 | 2.14e-03 |
| Solder, unspecified | 0 | 7.35e-05 | 0 | 0 | 7.35e-05 | 3.53e-07 |
| Sulfur (S, in ground) | 1.53e-02 | 0 | 0 | 0 | 1.53e-02 | 7.34e-05 |
| Sulfur hexafluoride | 0 | 1.62e-02 | 0 | 0 | 1.62e-02 | 7.79e-05 |
| Sulfuric acid | 0 | 3.25e-01 | 0 | 0 | 3.25e-01 | 1.56e-03 |
| Surfactant, unspecified | 0 | 1.09e-04 | 0 | 0 | 1.09e-04 | 5.25e-07 |
| Synthetic resin, unspecified | 0 | 6.57e-04 | 0 | 0 | 6.57e-04 | 3.16e-06 |
| Tetrahydrofuran | 0 | 3.82e-03 | 0 | 0 | 3.82e-03 | 1.84e-05 |
| Tetramethyl ammonium hydroxide | 0 | 1.29e-01 | 0 | 0 | 1.29e-01 | 6.18e-04 |
| Tin (Sn, ore) | 1.19e-02 | 0 | 0 | 0 | 1.19e-02 | 5.72e-05 |
| Toluene | 0 | 2.75e-02 | 0 | 0 | 2.75e-02 | 1.32e-04 |
| Unspecified ancillary material | 0 | 4.19e-04 | 0 | 0 | 4.19e-04 | 2.01e-06 |
| Unspecified LCD process material | 0 | 2.57e-02 | 0 | 0 | 2.57e-02 | 1.23e-04 |
| Unspecified LCD process material ("Natural Sweeper") | 0 | 1.09e-04 | 0 | 0 | 1.09e-04 | 5.23e-07 |
| Uranium (U, ore) | 0 | 0 | 0 | 1.00e-08 | 1.00e-08 | 4.81e-11 |
| Water | 0 | 6.88e-02 | 0 | 0 | 6.88e-02 | 3.30e-04 |
| Xylene (mixed isomers) | 0 | 1.57e-03 | 0 | 0 | 1.57e-03 | 7.54e-06 |
| Zinc (Zn, ore) | 6.61e-10 | 0 | 0 | 0 | 6.61e-10 | 3.18e-12 |
| **Total ancillary inputs** | 1.06e+00 | 2.04e+02 | 1.29e+00 | 2.11e+00 | 2.08e+02 | 100.00% |

## Table J-12. LCD utility inputs

| Material | Upstream | Mfg | Use | EOL | Total | % or Fraction of Total |
|---|---|---|---|---|---|---|
| **Fuels (kg/functional unit):** | | | | | | |
| Fuel Oil #2 (distillate) | 0 | 5.42E-02 | 0 | 0 | 5.42E-02 | 0.14% |
| Fuel oil #4 (avg. of #2 + #6) | 0 | 2.11E-01 | 0 | -9.09E-01 | -6.99E-01 | -1.81% |
| Fuel oil #6 (residual) | 0 | 1.25E-01 | 0 | 0 | 1.25E-01 | 0.33% |
| Kerosene | 0 | 4.65E-01 | 0 | 0 | 4.65E-01 | 1.21% |
| LNG | 0 | 3.22E+00 | 0 | 0 | 3.22E+00 | 8.34% |
| LPG | 0 | 1.68E+01 | 0 | 1.38E-03 | 1.68E+01 | 43.63% |
| Natural gas | 0 | 1.16E+00 | 0 | -8.61E-01 | 3.01E-01 | 0.78% |
| Steam | 0 | 1.45E-01 | 0 | 0 | 1.45E-01 | 0.37% |
| Coal, average (in ground) | 2.49E+00 | 6.86E-01 | 0 | -7.66E-03 | 3.17E+00 | 8.21% |
| Coal, lignite (in ground) | 4.10E-01 | 0 | 0 | 0 | 4.10E-01 | 1.06% |
| Natural gas (in ground) | 1.03E+01 | 2.41E+00 | 0 | -1.38E-01 | 1.26E+01 | 32.66% |
| Petroleum (in ground) | 1.52E+00 | 4.84E-01 | 0 | -3.81E-02 | 1.96E+00 | 5.08% |
| Uranium (U, ore) | 7.86E-05 | 1.15E-05 | 0 | -1.32E-07 | 9.01E-05 | 2.33E-06 |
| **Total fuels** | 1.47E+01 | 2.58E+01 | 0 | -1.95E+00 | 3.86E+01 | 100.00% |
| **Electricity (MJ/functional unit):** | | | | | | |
| Electricity | 3.46E+01 | 3.16E+02 | 8.53E+02 | 1.62E-01 | 1.20E+03 | |
| **Water (kg or L/functional unit):** | | | | | | |
| Water | 2.63E+02 | 2.15E+03 | 4.25E+02 | -1.80E+01 | 2.82E+03 | |
| **Total energy (fuels and electricity, MJ/functional unit):** | | | | | | |
| Energy | 6.33E+02 | 1.44E+03 | 8.53E+02 | -8.44E+01 | 2.84E+03 | |

## Table J-13. LCD air emissions (kg/functional unit)

| Material | Disposition | Upstream | Mfg | Use | EOL | Total | Fraction of Total |
|---|---|---|---|---|---|---|---|
| 1,1,1-Trichloroethane | Air | 1.62e-08 | 2.28e-07 | 7.16e-07 | -1.95e-08 | 9.40e-07 | 2.72e-09 |
| 1,2-Dichloroethane | Air | 3.24e-08 | 1.75e-07 | 1.34e-06 | -3.85e-08 | 1.51e-06 | 4.36e-09 |
| 1,2-Dichlorotetrafluoroethane | Air | 8.90e-08 | 0 | 0 | 0 | 8.90e-08 | 2.57e-10 |
| 1,4-Dichlorobenzene | Air | 1.89e-07 | 1.89e-08 | 0 | -1.49e-09 | 2.06e-07 | 5.96e-10 |
| 2,3,7,8-TCDD | Air | 0 | 5.90e-14 | 4.79e-13 | 9.08e-17 | 5.38e-13 | 1.55e-15 |
| 2,3,7,8-TCDF | Air | 0 | 2.05e-13 | 1.71e-12 | 3.24e-16 | 1.91e-12 | 5.53e-15 |
| 2,4-Dinitrotoluene | Air | 2.27e-10 | 1.22e-09 | 9.37e-09 | -2.74e-10 | 1.05e-08 | 3.05e-11 |
| 2-Chloroacetophenone | Air | 5.67e-09 | 3.06e-08 | 2.34e-07 | -9.35e-11 | 2.70e-07 | 7.82e-10 |
| 2-Methylnaphthalene | Air | 3.78e-09 | 1.18e-09 | 9.95e-10 | -3.53e-11 | 5.92e-09 | 1.71e-11 |
| 3-Methylcholanthrene | Air | 2.83e-10 | 2.84e-11 | 0 | -2.66e-12 | 3.09e-10 | 8.94e-13 |
| 5-Methyl chrysene | Air | 1.78e-11 | 9.60e-11 | 7.36e-10 | -2.15e-11 | 8.29e-10 | 2.40e-12 |
| Acenaphthene | Air | 9.25e-10 | 1.49e-08 | 2.12e-08 | -5.04e-10 | 3.65e-08 | 1.06e-10 |
| Acenaphthylene | Air | 4.89e-10 | 1.27e-09 | 8.42e-09 | -2.47e-10 | 9.93e-09 | 2.87e-11 |
| Acetaldehyde | Air | 7.90e-07 | 2.49e-06 | 1.91e-05 | -5.57e-07 | 2.18e-05 | 6.30e-08 |
| Acetic acid | Air | 4.22e-06 | 1.36e-03 | 0 | 0 | 1.36e-03 | 3.93e-06 |
| Acetone | Air | 3.26e-07 | 1.86e-04 | 0 | 0 | 1.86e-04 | 5.39e-07 |
| Acetophenone | Air | 1.22e-08 | 6.55e-08 | 5.02e-07 | -1.47e-08 | 5.65e-07 | 1.63e-09 |
| Acetylene | Air | 1.14e-05 | 0 | 0 | 0 | 1.14e-05 | 3.30e-08 |
| Acrolein | Air | 2.35e-07 | 1.27e-06 | 9.71e-06 | -2.83e-07 | 1.09e-05 | 3.16e-08 |
| Adsorbable organic halides | Air | 3.56e-17 | 0 | 0 | 0 | 3.56e-17 | 1.03e-19 |
| Alcohols | Air | 2.85e-06 | 0 | 0 | 0 | 2.85e-06 | 8.23e-09 |
| Aldehydes | Air | 8.53e-04 | 8.98e-05 | 0 | -1.05e-04 | 8.37e-04 | 2.42e-06 |
| Al-etchant, unspecified | Air | 0 | 1.37e-02 | 0 | 0 | 1.37e-02 | 3.97e-05 |
| Alkane (unspecified) | Air | 1.07e-04 | 0 | 0 | 0 | 1.07e-04 | 3.10e-07 |
| Alkenes | Air | 1.79e-05 | 0 | 0 | 0 | 1.79e-05 | 5.18e-08 |
| Alkyne (unspecified) | Air | 5.46e-08 | 0 | 0 | 0 | 5.46e-08 | 1.58e-10 |
| Aluminum (elemental) | Air | 8.09e-05 | 9.59e-07 | 0 | -5.72e-08 | 8.18e-05 | 2.36e-07 |
| Ammonia | Air | 1.12e-02 | 6.26e-02 | 0 | -6.95e-05 | 7.37e-02 | 2.13e-04 |
| Anthracene | Air | 5.61e-10 | 1.68e-09 | 7.27e-09 | -2.09e-10 | 9.30e-09 | 2.69e-11 |
| Antimony | Air | 2.28e-07 | 3.24e-06 | 1.63e-06 | -4.25e-08 | 5.05e-06 | 1.46e-08 |
| Argon | Air | 0 | 5.80e-03 | 0 | 0 | 5.80e-03 | 1.68e-05 |
| Aromatic hydrocarbons | Air | 7.67e-05 | 2.55e-09 | 0 | -9.05e-11 | 7.67e-05 | 2.22e-07 |
| Arsenic | Air | 1.63e-06 | 3.14e-06 | 1.40e-05 | -1.72e-06 | 1.70e-05 | 4.93e-08 |
| Barium | Air | 1.39e-06 | 1.76e-06 | 7.67e-07 | -1.65e-08 | 3.91e-06 | 1.13e-08 |
| Benzaldehyde | Air | 2.78e-14 | 0 | 0 | 0 | 2.78e-14 | 8.04e-17 |
| Benzene | Air | 8.85e-02 | 2.70e-03 | 4.36e-05 | -4.82e-04 | 9.07e-02 | 2.62e-04 |
| Benzo[a]anthracene | Air | 3.92e-10 | 2.78e-09 | 3.46e-09 | -8.13e-11 | 6.55e-09 | 1.89e-11 |
| Benzo[a]pyrene | Air | 4.40e-08 | 1.91e-10 | 1.27e-09 | -3.93e-11 | 4.54e-08 | 1.31e-10 |
| Benzo[b,j,k]fluoranthene | Air | 8.92e-11 | 1.37e-09 | 3.97e-09 | -1.07e-10 | 5.32e-09 | 1.54e-11 |
| Benzo[b]fluoranthene | Air | 2.91e-10 | 3.09e-11 | 0 | -2.79e-12 | 3.19e-10 | 9.24e-13 |
| Benzo[g,h,i]perylene | Air | 2.23e-10 | 1.48e-09 | 1.35e-09 | -2.83e-11 | 3.02e-09 | 8.74e-12 |
| Benzo[k]fluoranthene | Air | 2.91e-10 | 3.09e-11 | 0 | -2.79e-12 | 3.19e-10 | 9.24e-13 |
| Benzyl chloride | Air | 5.67e-07 | 3.05e-06 | 2.34e-05 | -6.84e-07 | 2.64e-05 | 7.62e-08 |
| Beryllium | Air | 2.19e-07 | 1.86e-07 | 7.12e-07 | -1.99e-07 | 9.18e-07 | 2.65e-09 |
| Biphenyl | Air | 1.38e-09 | 7.42e-09 | 5.69e-08 | -1.66e-09 | 6.40e-08 | 1.85e-10 |
| Boron | Air | 1.79e-05 | 0 | 0 | 0 | 1.79e-05 | 5.16e-08 |
| Bromine | Air | 9.94e-07 | 0 | 0 | 0 | 9.94e-07 | 2.87e-09 |
| Bromoform | Air | 3.16e-08 | 1.70e-07 | 1.31e-06 | -3.81e-08 | 1.47e-06 | 4.25e-09 |
| Bromomethane | Air | 1.30e-07 | 6.98e-07 | 5.36e-06 | -1.56e-07 | 6.03e-06 | 1.74e-08 |

## Table J-13. LCD air emissions (kg/functional unit)

| Material | Disposition | Upstream | Mfg | Use | EOL | Total | Fraction of Total |
|---|---|---|---|---|---|---|---|
| Butane | Air | 3.42e-04 | 3.31e-05 | 0 | -3.11e-06 | 3.72e-04 | 1.07e-06 |
| Butene | Air | 1.09e-07 | 0 | 0 | 0 | 1.09e-07 | 3.15e-10 |
| Cadmium | Air | 2.93e-07 | 5.25e-07 | 1.80e-06 | -6.58e-08 | 2.55e-06 | 7.37e-09 |
| Calcium | Air | 8.74e-05 | 8.31e-07 | 0 | -4.96e-08 | 8.82e-05 | 2.55e-07 |
| Carbon dioxide | Air | 1.07e+02 | 6.22e+01 | 1.66e+02 | 1.39e+00 | 3.36e+02 | 9.72e-01 |
| Carbon disulfide | Air | 1.05e-07 | 5.67e-07 | 4.35e-06 | -1.27e-07 | 4.90e-06 | 1.42e-08 |
| Carbon monoxide | Air | 3.74e-01 | 3.85e-02 | 3.02e-02 | -3.45e-03 | 4.39e-01 | 1.27e-03 |
| Carbon tetrachloride | Air | 0 | 0 | 0 | 5.85e-10 | 5.85e-10 | 1.69e-12 |
| Chloride ions | Air | 1.77e-04 | 2.09e-04 | 6.78e-05 | -1.64e-06 | 4.52e-04 | 1.31e-06 |
| Chlorine | Air | 6.64e-07 | 1.01e-09 | 0 | -1.80e-10 | 6.65e-07 | 1.92e-09 |
| Chloroacetophenone | Air | 0 | 0 | 0 | -6.74e-09 | -6.74e-09 | -1.95e-11 |
| Chlorobenzene | Air | 1.78e-08 | 9.60e-08 | 7.36e-07 | -2.15e-08 | 8.29e-07 | 2.40e-09 |
| Chloroform | Air | 4.78e-08 | 2.57e-07 | 1.97e-06 | -5.70e-08 | 2.22e-06 | 6.43e-09 |
| Chromium | Air | 6.40e-09 | 0 | 0 | 0 | 6.40e-09 | 1.85e-11 |
| Chromium (III) | Air | 1.50e-06 | 2.96e-06 | 9.07e-06 | -1.43e-06 | 1.21e-05 | 3.50e-08 |
| Chromium (VI) | Air | 1.50e-06 | 1.52e-06 | 2.69e-06 | -1.43e-06 | 4.29e-06 | 1.24e-08 |
| Chrysene | Air | 3.77e-10 | 1.89e-09 | 3.81e-09 | -1.00e-10 | 5.98e-09 | 1.73e-11 |
| Cobalt | Air | 5.36e-07 | 4.13e-06 | 4.54e-06 | -1.30e-07 | 9.07e-06 | 2.62e-08 |
| Copper | Air | 8.26e-07 | 1.15e-06 | 3.72e-07 | -1.65e-08 | 2.33e-06 | 6.75e-09 |
| Cr-etchant, unspecified | Air | 0 | 4.12e-02 | 0 | 0 | 4.12e-02 | 1.19e-04 |
| Cumene | Air | 4.30e-09 | 2.75e-09 | 1.77e-07 | -5.18e-09 | 1.79e-07 | 5.18e-10 |
| Cumene hydroperoxide | Air | 0 | 2.04e-08 | 0 | 0 | 2.04e-08 | 5.89e-11 |
| Cyanide (-1) | Air | 2.04e-06 | 1.09e-05 | 8.37e-05 | -2.44e-06 | 9.42e-05 | 2.72e-07 |
| Cyclohexane | Air | 0 | 4.85e-05 | 0 | 0 | 4.85e-05 | 1.40e-07 |
| Di(2-ethylhexyl)phthalate | Air | 5.92e-08 | 3.19e-07 | 2.44e-06 | -7.13e-08 | 2.75e-06 | 7.95e-09 |
| Dibenzo[a,h]anthracene | Air | 1.98e-10 | 1.02e-09 | 3.26e-10 | -1.85e-12 | 1.54e-09 | 4.46e-12 |
| Dichlorobenzene (mixed isomers) | Air | 0 | 0 | 0 | -2.82e-10 | -2.82e-10 | -8.16e-13 |
| Dichloromethane | Air | 2.35e-07 | 1.27e-06 | 9.71e-06 | -2.82e-07 | 1.09e-05 | 3.16e-08 |
| Diethyl ether | Air | 0 | 9.26e-05 | 0 | 0 | 9.26e-05 | 2.68e-07 |
| Diethylene glycol | Air | 0 | 9.69e-05 | 0 | 0 | 9.69e-05 | 2.80e-07 |
| Dimethyl sulfate | Air | 3.89e-08 | 2.09e-07 | 1.61e-06 | -4.69e-08 | 1.81e-06 | 5.23e-09 |
| Dimethylbenzanthracene | Air | 2.36e-09 | 2.36e-10 | 0 | -2.23e-11 | 2.58e-09 | 7.45e-12 |
| Dioxins, remaining unspeciated | Air | 1.32e-11 | 8.22e-12 | 2.18e-11 | 1.33e-10 | 1.76e-10 | 5.08e-13 |
| Ethane | Air | 6.08e-04 | 4.88e-05 | 0 | -4.59e-06 | 6.53e-04 | 1.89e-06 |
| Ethanethiol | Air | 4.50e-07 | 0 | 0 | 0 | 4.50e-07 | 1.30e-09 |
| Ethanol | Air | 6.51e-07 | 4.63e-05 | 0 | 0 | 4.69e-05 | 1.36e-07 |
| Ethyl Chloride | Air | 3.40e-08 | 1.83e-07 | 1.41e-06 | -4.10e-08 | 1.58e-06 | 4.57e-09 |
| Ethylacetate | Air | 0 | 1.22e-07 | 0 | 0 | 1.22e-07 | 3.53e-10 |
| Ethylacetate | Treatment | 0 | 2.32e-06 | 0 | 0 | 2.32e-06 | 6.70e-09 |
| Ethylbenzene | Air | 2.28e-07 | 4.48e-07 | 3.16e-06 | -9.00e-08 | 3.75e-06 | 1.08e-08 |
| Ethylene | Air | 1.02e-04 | 0 | 0 | 0 | 1.02e-04 | 2.94e-07 |
| Ethylene dibromide | Air | 9.73e-10 | 5.24e-09 | 4.02e-08 | -1.17e-09 | 4.52e-08 | 1.31e-10 |
| Fluoranthene | Air | 1.07e-09 | 6.31e-09 | 2.50e-08 | -6.98e-10 | 3.17e-08 | 9.17e-11 |
| Fluorene | Air | 1.20e-09 | 6.68e-09 | 3.13e-08 | -8.93e-10 | 3.83e-08 | 1.11e-10 |
| Fluoride | Air | 0 | 3.78e-08 | 7.29e-06 | 1.38e-09 | 7.33e-06 | 2.12e-08 |
| Fluorides (F-) | Air | 9.48e-07 | 2.24e-05 | 0 | -2.05e-07 | 2.32e-05 | 6.69e-08 |
| Fluorine | Air | 2.83e-07 | 0 | 0 | 0 | 2.83e-07 | 8.18e-10 |
| Formaldehyde | Air | 1.87e-05 | 1.09e-04 | 3.16e-05 | -5.78e-06 | 1.54e-04 | 4.45e-07 |
| Furans, remaining unspeciated | Air | 6.10e-11 | 3.02e-11 | 3.48e-11 | -7.40e-11 | 5.20e-11 | 1.50e-13 |

## Table J-13. LCD air emissions (kg/functional unit)

| Material | Disposition | Upstream | Mfg | Use | EOL | Total | Fraction of Total |
|---|---|---|---|---|---|---|---|
| Halogenated hydrocarbons (unspecified) | Air | 1.12e-06 | 1.42e-14 | 0 | -4.93e-16 | 1.12e-06 | 3.24e-09 |
| Halogenated matter (unspecified) | Air | 4.67e-19 | 0 | 0 | 0 | 4.67e-19 | 1.35e-21 |
| HALON-1301 | Air | 7.95e-08 | 2.47e-11 | 0 | -8.75e-13 | 7.95e-08 | 2.30e-10 |
| HCFC-225ca | Air | 0 | 1.40e-04 | 0 | 0 | 1.40e-04 | 4.05e-07 |
| HCFC-225cb | Air | 0 | 1.40e-04 | 0 | 0 | 1.40e-04 | 4.05e-07 |
| Heptane | Air | 1.09e-06 | 7.77e-05 | 0 | 0 | 7.88e-05 | 2.28e-07 |
| Hexamethyldisilizane | Air | 0 | 1.37e-06 | 0 | 0 | 1.37e-06 | 3.97e-09 |
| Hexane | Air | 2.86e-04 | 2.86e-05 | 2.24e-06 | -2.73e-06 | 3.14e-04 | 9.07e-07 |
| Hydrocarbons, remaining unspeciated | Air | 9.30e-03 | 7.75e-03 | 0 | -6.51e-04 | 1.64e-02 | 4.74e-05 |
| Hydrochloric acid | Air | 1.50e-03 | 6.58e-02 | 4.02e-02 | -6.88e-04 | 1.07e-01 | 3.09e-04 |
| Hydrofluoric acid | Air | 2.27e-04 | 5.27e-02 | 5.02e-03 | -1.47e-04 | 5.78e-02 | 1.67e-04 |
| Hydrogen | Air | 2.99e-04 | 1.33e-04 | 0 | 0 | 4.32e-04 | 1.25e-06 |
| Hydrogen cyanide | Air | 3.83e-06 | 0 | 0 | 0 | 3.83e-06 | 1.11e-08 |
| Hydrogen sulfide | Air | 1.55e-05 | 1.51e-04 | 0 | -8.88e-06 | 1.57e-04 | 4.55e-07 |
| Indeno(1,2,3-cd)pyrene | Air | 3.44e-10 | 1.57e-09 | 2.46e-09 | -6.23e-11 | 4.31e-09 | 1.25e-11 |
| Iodine | Air | 2.95e-07 | 0 | 0 | 0 | 2.95e-07 | 8.52e-10 |
| Iron | Air | 4.76e-05 | 1.85e-06 | 0 | -1.11e-07 | 4.94e-05 | 1.43e-07 |
| Isophorone | Air | 4.70e-07 | 2.53e-06 | 1.94e-05 | -5.67e-07 | 2.18e-05 | 6.32e-08 |
| Isopropyl alcohol | Air | 0 | 1.78e-02 | 0 | 0 | 1.78e-02 | 5.13e-05 |
| Isopropylpropionate | Air | 9.91e-11 | 0 | 0 | 0 | 9.91e-11 | 2.87e-13 |
| ITO etchant, unspecified | Air | 0 | 6.86e-03 | 0 | 0 | 6.86e-03 | 1.98e-05 |
| Lanthanum | Air | 2.63e-08 | 0 | 0 | 0 | 2.63e-08 | 7.61e-11 |
| Lead | Air | 3.13e-06 | 6.63e-07 | 4.76e-06 | 4.76e-06 | 1.33e-05 | 3.85e-08 |
| Lead (Pb, ore) | Air | 1.48e-06 | 0 | 0 | 0 | 1.48e-06 | 4.29e-09 |
| Magnesium | Air | 4.06e-05 | 4.80e-05 | 3.68e-04 | -1.07e-05 | 4.46e-04 | 1.29e-06 |
| Manganese | Air | 2.94e-06 | 1.24e-06 | 1.70e-05 | -3.23e-06 | 1.80e-05 | 5.19e-08 |
| Manganese (Mn, ore) | Air | 0 | 3.67e-06 | 0 | 0 | 3.67e-06 | 1.06e-08 |
| Mercaptans | Air | 1.81e-07 | 0 | 0 | 0 | 1.81e-07 | 5.24e-10 |
| Mercury | Air | 8.53e-07 | 4.57e-07 | 2.80e-06 | -8.64e-08 | 4.03e-06 | 1.16e-08 |
| Metals, remaining unspeciated | Air | 2.64e-05 | 1.60e-08 | 0 | -7.10e-10 | 2.64e-05 | 7.63e-08 |
| Methane | Air | 3.54e+00 | 1.22e-01 | 2.41e-01 | -2.82e-02 | 3.87e+00 | 1.12e-02 |
| Methanol | Air | 1.11e-06 | 0 | 0 | 0 | 1.11e-06 | 3.20e-09 |
| Methyl chloride | Air | 4.30e-07 | 2.31e-06 | 1.77e-05 | -5.18e-07 | 2.00e-05 | 5.77e-08 |
| Methyl ethyl ketone | Air | 3.16e-07 | 2.43e-06 | 1.31e-05 | -3.81e-07 | 1.54e-05 | 4.46e-08 |
| Methyl ethyl ketone | Treatment | 0 | 1.34e-04 | 0 | 0 | 1.34e-04 | 3.88e-07 |
| Methyl hydrazine | Air | 1.38e-07 | 7.42e-07 | 5.69e-06 | -1.66e-07 | 6.40e-06 | 1.85e-08 |
| Methyl methacrylate | Air | 1.62e-08 | 8.73e-08 | 6.69e-07 | -1.95e-08 | 7.53e-07 | 2.18e-09 |
| Methyl tert-butyl ether | Air | 2.84e-08 | 1.52e-07 | 1.17e-06 | -3.81e-07 | 9.71e-07 | 2.81e-09 |
| Molybdenum | Air | 2.98e-07 | 6.21e-07 | 2.18e-07 | -1.35e-08 | 1.12e-06 | 3.25e-09 |
| Monosilane | Air | 0 | 1.54e-03 | 0 | 0 | 1.54e-03 | 4.44e-06 |
| Naphthalene | Air | 1.30e-07 | 7.67e-07 | 6.82e-07 | -1.90e-08 | 1.56e-06 | 4.51e-09 |
| N-bromoacetamide | Air | 0 | 9.18e-03 | 0 | 0 | 9.18e-03 | 2.65e-05 |
| Nickel | Air | 8.06e-06 | 5.57e-05 | 2.56e-05 | -2.98e-06 | 8.64e-05 | 2.50e-07 |
| Nitric acid | Air | 0 | 2.69e-04 | 0 | 0 | 2.69e-04 | 7.76e-07 |
| Nitrogen dioxide | Air | 3.08e-02 | 0 | 0 | 4.46e-04 | 3.12e-02 | 9.03e-05 |
| Nitrogen fluoride | Air | 0 | 2.45e-01 | 0 | 0 | 2.45e-01 | 7.09e-04 |
| Nitrogen oxides | Air | 6.56e-01 | 7.62e-01 | 4.39e-01 | -1.36e-02 | 1.84e+00 | 5.33e-03 |
| Nitrous oxide | Air | 1.24e-03 | 1.20e-03 | 1.27e-03 | -7.19e-04 | 2.98e-03 | 8.63e-06 |
| Nonmethane hydrocarbons, remaining unspeciated | Air | 2.07e-01 | 8.87e-03 | 0 | -1.26e-03 | 2.15e-01 | 6.22e-04 |

## Table J-13. LCD air emissions (kg/functional unit)

| Material | Disposition | Upstream | Mfg | Use | EOL | Total | Fraction of Total |
|---|---|---|---|---|---|---|---|
| n-Propane | Air | 4.49e-05 | 8.67e-08 | 0 | -2.40e-07 | 4.48e-05 | 1.29e-07 |
| Other organics | Air | 4.45e-01 | 1.35e-02 | 0 | -2.41e-03 | 4.56e-01 | 1.32e-03 |
| o-xylene | Air | 4.83e-06 | 2.24e-07 | 2.13e-08 | -2.50e-08 | 5.05e-06 | 1.46e-08 |
| Pentane | Air | 4.18e-04 | 4.10e-05 | 0 | -3.85e-06 | 4.55e-04 | 1.31e-06 |
| Perfluoroethane | Air | 5.36e-06 | 0 | 0 | 0 | 5.36e-06 | 1.55e-08 |
| Perfluoromethane | Air | 4.83e-05 | 0 | 0 | 0 | 4.83e-05 | 1.40e-07 |
| Phenanthrene | Air | 4.92e-09 | 1.92e-08 | 9.35e-08 | -2.66e-09 | 1.15e-07 | 3.33e-10 |
| Phenol | Air | 9.34e-07 | 6.98e-08 | 5.36e-07 | -1.56e-08 | 1.52e-06 | 4.41e-09 |
| Phosphine | Air | 0 | 6.26e-02 | 0 | 0 | 6.26e-02 | 1.81e-04 |
| Phosphoric acid | Air | 0 | 4.85e-05 | 0 | 0 | 4.85e-05 | 1.40e-07 |
| Phosphorus (yellow or white) | Air | 7.54e-07 | 6.20e-07 | 1.85e-06 | -7.84e-08 | 3.14e-06 | 9.09e-09 |
| Phosphorus pentoxide | Air | 2.56e-10 | 0 | 0 | 0 | 2.56e-10 | 7.40e-13 |
| PM | Air | 9.16e-02 | 6.99e-03 | 0 | -1.24e-02 | 8.62e-02 | 2.49e-04 |
| PM-10 | Air | 3.45e-07 | 6.85e-03 | 2.16e-02 | 3.43e-06 | 2.84e-02 | 8.21e-05 |
| Polycyclic aromatic hydrocarbons | Air | 6.77e-06 | 2.84e-12 | 0 | -1.01e-13 | 6.77e-06 | 1.96e-08 |
| Polyimide, unspecified | Air | 0 | 1.40e-04 | 0 | 0 | 1.40e-04 | 4.04e-07 |
| Potassium | Air | 1.10e-05 | 0 | 0 | 0 | 1.10e-05 | 3.19e-08 |
| Process material for backlight assembly | Air | 0 | 7.03e-05 | 0 | 0 | 7.03e-05 | 2.03e-07 |
| Propionaldehyde | Air | 3.08e-07 | 1.66e-06 | 1.27e-05 | -3.71e-07 | 1.43e-05 | 4.14e-08 |
| Propylene | Air | 1.18e-05 | 0 | 0 | 0 | 1.18e-05 | 3.42e-08 |
| Pyrene | Air | 1.08e-09 | 4.51e-09 | 1.24e-08 | -3.30e-10 | 1.77e-08 | 5.11e-11 |
| Scandium | Air | 6.40e-09 | 0 | 0 | 0 | 6.40e-09 | 1.85e-11 |
| Selenium | Air | 1.21e-06 | 6.11e-06 | 4.36e-05 | -1.27e-06 | 4.97e-05 | 1.44e-07 |
| Silicon | Air | 2.89e-04 | 8.31e-07 | 0 | -4.96e-08 | 2.90e-04 | 8.37e-07 |
| Sodium | Air | 7.73e-06 | 4.92e-06 | 0 | -2.93e-07 | 1.24e-05 | 3.57e-08 |
| Strontium | Air | 1.65e-06 | 0 | 0 | 0 | 1.65e-06 | 4.78e-09 |
| Styrene | Air | 2.03e-08 | 1.09e-07 | 8.37e-07 | -2.44e-08 | 9.42e-07 | 2.72e-09 |
| Sulfur dioxide | Air | 4.63e-02 | 2.95e-01 | 9.30e-01 | 2.96e-04 | 1.27e+00 | 3.68e-03 |
| Sulfur hexafluoride | Air | 0 | 7.30e-03 | 0 | 0 | 7.30e-03 | 2.11e-05 |
| Sulfur oxides | Air | 2.57e-02 | 4.07e-02 | 0 | -1.93e-02 | 4.71e-02 | 1.36e-04 |
| Sulfuric acid | Air | 6.31e-07 | 0 | 0 | 0 | 6.31e-07 | 1.82e-09 |
| Tars (unspecified) | Air | 3.09e-13 | 0 | 0 | 0 | 3.09e-13 | 8.92e-16 |
| Tetrachloroethylene | Air | 3.49e-08 | 1.88e-07 | 1.44e-06 | -4.14e-08 | 1.62e-06 | 4.68e-09 |
| Tetramethyl ammonium hydroxide | Air | 0 | 6.43e-01 | 0 | 0 | 6.43e-01 | 1.86e-03 |
| Thallium | Air | 4.36e-09 | 0 | 0 | 0 | 4.36e-09 | 1.26e-11 |
| Thorium | Air | 1.41e-08 | 0 | 0 | 0 | 1.41e-08 | 4.09e-11 |
| Tin | Air | 8.21e-09 | 0 | 0 | 0 | 8.21e-09 | 2.37e-11 |
| Titanium | Air | 2.85e-06 | 0 | 0 | 0 | 2.85e-06 | 8.24e-09 |
| TOCs, remaining unspeciated | Air | 0 | 6.74e-04 | 2.15e-03 | 4.08e-07 | 2.82e-03 | 8.16e-06 |
| Toluene | Air | 1.05e-05 | 5.95e-05 | 9.49e-06 | -2.95e-07 | 7.92e-05 | 2.29e-07 |
| Trichloroethylene | Air | 0 | 0 | 0 | 5.85e-10 | 5.85e-10 | 1.69e-12 |
| Unspecified LCD process material | Air | 0 | 4.49e-02 | 0 | 0 | 4.49e-02 | 1.30e-04 |
| Uranium | Air | 1.39e-08 | 0 | 0 | 0 | 1.39e-08 | 4.01e-11 |
| Vanadium | Air | 1.77e-05 | 3.22e-05 | 6.57e-06 | -9.16e-07 | 5.56e-05 | 1.61e-07 |
| Vinyl acetate | Air | 6.16e-09 | 3.31e-08 | 2.54e-07 | -7.42e-09 | 2.86e-07 | 8.28e-10 |
| Vinyl chloride | Air | 0 | 0 | 0 | 1.17e-09 | 1.17e-09 | 3.38e-12 |
| Waste metals, unspecified | Air | 6.33e-06 | 0 | 0 | 0 | 6.33e-06 | 1.83e-08 |
| Xylene (mixed isomers) | Air | 9.57e-06 | 1.49e-07 | 1.24e-06 | -2.71e-08 | 1.09e-05 | 3.16e-08 |
| Zinc (elemental) | Air | 6.60e-06 | 1.80e-05 | 5.69e-06 | -1.81e-07 | 3.01e-05 | 8.69e-08 |

## Table J-13. LCD air emissions (kg/functional unit)

| Material | Disposition | Upstream | Mfg | Use | EOL | Total | Fraction of Total |
|---|---|---|---|---|---|---|---|
| Zirconium | Air | 6.71e-09 | 0 | 0 | 0 | 6.71e-09 | 1.94e-11 |
| **Total air emissions** | | 1.12e+02 | 6.48e+01 | 1.68e+02 | 1.30e+00 | 3.46e+02 | 1.00e+00 |

## Table J-14. LCD water outputs (wastewater and water pollutants) (kg/functional unit)

| Material | Disposition | Upstream | Mfg | Use | EOL | Total | % or Fraction of Total |
|---|---|---|---|---|---|---|---|
| WASTEWATER STREAM | | | | | | | |
| Wastewater stream | surface water | 8.57e+00 | 2.52e+03 | 0 | -2.41e+00 | 2.53e+03 | 80.91% |
| Wastewater stream | treatment | 0 | 5.97e+02 | 0 | 0 | 5.97e+02 | 19.09% |
| Total wastewater streams | | 8.57e+00 | 3.12e+03 | 0 | -2.41e+00 | 3.13e+03 | 100.00% |
| WATER POLLUTANTS | | | | | | | |
| 1,1,1-Trichloroethane | surface water | 2.78e-14 | 2.29e-08 | 0 | 0 | 2.29e-08 | 1.36E-08 |
| 1,2-Dichloroethane | surface water | 0 | 0 | 0 | 1.74e-11 | 1.74e-11 | 1.03E-11 |
| Acids (H+) | surface water | 1.34e-04 | 1.76e-08 | 0 | -3.15e-09 | 1.34e-04 | 0.0080% |
| Adsorbable organic halides | surface water | 5.26e-08 | 1.82e-11 | 0 | -6.44e-13 | 5.26e-08 | 3.14E-08 |
| Alcohols | surface water | 3.75e-08 | 0 | 0 | 0 | 3.75e-08 | 2.23E-08 |
| Aldehydes | surface water | 5.08e-10 | 0 | 0 | 0 | 5.08e-10 | 3.03E-10 |
| Alkane (unspecified) | surface water | 1.92e-06 | 0 | 0 | 0 | 1.92e-06 | 0.0001% |
| Alkenes | surface water | 1.77e-07 | 0 | 0 | 0 | 1.77e-07 | 1.06E-07 |
| Aluminum (+3) | surface water | 6.00e-04 | 6.88e-06 | 0 | -2.44e-07 | 6.07e-04 | 0.0361% |
| Aluminum hydroxide | surface water | 4.36e-10 | 0 | 0 | 0 | 4.36e-10 | 2.60E-10 |
| Ammonia | surface water | 6.23e-04 | 0 | 0 | -3.91e-06 | 6.19e-04 | 0.0369% |
| Ammonia ions | surface water | 2.51e-05 | 1.33e-03 | 0 | -4.38e-05 | 1.31e-03 | 0.0782% |
| Antimony | surface water | 0 | 1.14e-07 | 0 | 0 | 1.14e-07 | 6.80E-08 |
| Aromatic hydrocarbons | surface water | 8.45e-06 | 4.25e-09 | 0 | -1.51e-10 | 8.46e-06 | 0.0005% |
| Arsenic | surface water | 0 | 1.14e-07 | 0 | 0 | 1.14e-07 | 6.80E-08 |
| Arsenic cmpds | surface water | 1.24e-06 | 0 | 0 | 5.34e-09 | 1.24e-06 | 0.0001% |
| Barium cmpds | surface water | 8.36e-05 | 1.36e-08 | 0 | 7.51e-08 | 8.37e-05 | 0.0050% |
| Barium sulfate | surface water | 1.86e-04 | 0 | 0 | 0 | 1.86e-04 | 0.0111% |
| Benzene | surface water | 1.93e-06 | 0 | 0 | 1.74e-11 | 1.93e-06 | 0.0001% |
| BOD | surface water | 7.72e-04 | 2.79e-02 | 0 | -3.18e-04 | 2.83e-02 | 1.6873% |
| BOD | treatment | 0 | 5.74e-02 | 0 | 0 | 5.74e-02 | 3.4201% |
| Borax | treatment | 0 | 1.31e-06 | 0 | 0 | 1.31e-06 | 0.0001% |
| Boric acid | surface water | 5.57e-07 | 0 | 0 | 0 | 5.57e-07 | 3.32E-07 |
| Boron | surface water | 0 | 4.58e-06 | 0 | 0 | 4.58e-06 | 0.0003% |
| Boron (B III) | surface water | 9.79e-08 | 0 | 0 | 0 | 9.79e-08 | 5.83E-08 |
| Cadmium | surface water | 0 | 1.14e-07 | 0 | 0 | 1.14e-07 | 6.80E-08 |
| Cadmium cmpds | surface water | 1.89e-07 | 1.42e-11 | 0 | 2.85e-10 | 1.89e-07 | 1.13E-07 |
| Calcium (+2) | surface water | 1.37e-03 | 0 | 0 | 0 | 1.37e-03 | 0.0816% |
| Carbon tetrachloride | surface water | 0 | 0 | 0 | 1.74e-11 | 1.74e-11 | 1.03E-11 |
| Carbonate ion | surface water | 2.69e-03 | 0 | 0 | 0 | 2.69e-03 | 0.1601% |
| Cesium (+2) | surface water | 5.92e-09 | 0 | 0 | 0 | 5.92e-09 | 3.53E-09 |
| Chloride ions | surface water | 2.33e-01 | 3.12e-01 | 0 | -1.58e-02 | 5.29e-01 | 31.5275% |
| Chlorine | surface water | 6.36e-07 | 0 | 0 | 0 | 6.36e-07 | 3.79E-07 |
| Chloroform | surface water | 2.87e-12 | 0 | 0 | 1.74e-11 | 2.02e-11 | 1.21E-11 |
| Chromium | surface water | 0 | 8.84e-06 | 0 | 0 | 8.84e-06 | 0.0005% |
| Chromium (III) | surface water | 6.23e-06 | 3.49e-09 | 0 | 1.80e-09 | 6.23e-06 | 0.0004% |
| Chromium (VI) | surface water | 2.94e-07 | 2.33e-07 | 0 | 1.80e-09 | 5.29e-07 | 3.15E-07 |
| Cobalt (Co I, Co II, Co III) | surface water | 7.70e-10 | 0 | 0 | 0 | 7.70e-10 | 4.59E-10 |
| COD | surface water | 7.67e-03 | 8.20e-02 | 0 | -2.69e-03 | 8.70e-02 | 5.1827% |
| COD | treatment | 0 | 3.90e-02 | 0 | 0 | 3.90e-02 | 2.3251% |
| Colon bacillus (bacteria in large intestine) | surface water | 0 | 3.89e-03 | 0 | 0 | 3.89e-03 | 0.2320% |
| Copper | surface water | 0 | 9.18e-07 | 0 | 0 | 9.18e-07 | 0.0001% |
| Copper (+1 & +2) | surface water | 3.80e-06 | 2.84e-10 | 0 | -1.01e-11 | 3.80e-06 | 0.0002% |
| Copper (+1 & +2) | treatment | 0 | 4.28e-05 | 0 | 0 | 4.28e-05 | 0.0026% |

## Table J-14. LCD water outputs (wastewater and water pollutants) (kg/functional unit)

| Material | Disposition | Upstream | Mfg | Use | EOL | Total | % or Fraction of Total |
|---|---|---|---|---|---|---|---|
| Cyanide (-1) | surface water | 4.49e-06 | 3.66e-06 | 0 | -7.04e-13 | 8.15e-06 | 0.0005% |
| Cyanide (-1) | treatment | 0 | 6.67e-07 | 0 | 0 | 6.67e-07 | 3.97E-07 |
| Dichloromethane | surface water | 8.22e-09 | 0 | 0 | 2.78e-11 | 8.25e-09 | 4.91E-09 |
| Dissolved organic matter (chlorinated) | surface water | 1.31e-06 | 0 | 0 | 0 | 1.31e-06 | 0.0001% |
| Dissolved organics | surface water | 1.20e-03 | 4.67e-08 | 0 | -8.34e-09 | 1.20e-03 | 0.0716% |
| Dissolved solids | surface water | 3.21e-03 | 1.75e-01 | 0 | -5.69e-05 | 1.78e-01 | 10.6251% |
| Edetic acid (EDTA) | surface water | 9.46e-10 | 0 | 0 | 0 | 9.46e-10 | 5.63E-10 |
| Ethylbenzene | surface water | 1.43e-07 | 0 | 0 | 6.28e-11 | 1.43e-07 | 8.50E-08 |
| Fluoride | surface water | 3.39e-06 | 0 | 0 | 0 | 3.39e-06 | 0.0002% |
| Fluorides (F-) | surface water | 5.14e-05 | 1.29e-02 | 0 | -5.01e-06 | 1.30e-02 | 0.7724% |
| Fluorides (F-) | treatment | 0 | 2.40e-04 | 0 | 0 | 2.40e-04 | 0.0143% |
| Formaldehyde | surface water | 3.54e-14 | 0 | 0 | 0 | 3.54e-14 | 2.11E-14 |
| Halogenated matter (organic) | surface water | 1.65e-13 | 5.67e-12 | 0 | -2.01e-13 | 5.64e-12 | 3.36E-12 |
| Hexachloroethane | surface water | 5.06e-18 | 0 | 0 | 0 | 5.06e-18 | 3.01E-18 |
| Hexane | surface water | 0 | 5.88e-04 | 0 | 0 | 5.88e-04 | 0.0351% |
| Hydrazine | surface water | 4.35e-10 | 0 | 0 | 0 | 4.35e-10 | 2.59E-10 |
| Hydrocarbons, remaining unspeciated | surface water | 8.97e-05 | 1.70e-05 | 0 | -7.87e-07 | 1.06e-04 | 0.0063% |
| Hydrochloric acid | treatment | 0 | 3.29e-06 | 0 | 0 | 3.29e-06 | 0.0002% |
| Hypochlorite | surface water | 8.62e-10 | 0 | 0 | 0 | 8.62e-10 | 5.14E-10 |
| Hypochlorous acid | surface water | 8.62e-10 | 0 | 0 | 0 | 8.62e-10 | 5.14E-10 |
| Iodide (-1) | surface water | 5.93e-07 | 0 | 0 | 0 | 5.93e-07 | 3.53E-07 |
| Iron | surface water | 0 | 1.31e-04 | 0 | 0 | 1.31e-04 | 0.0078% |
| Iron | treatment | 0 | 8.33e-05 | 0 | 0 | 8.33e-05 | 0.0050% |
| Iron (+2 & +3) | surface water | 3.71e-04 | 1.73e-08 | 0 | -1.02e-08 | 3.71e-04 | 0.0221% |
| Lead | surface water | 0 | 8.18e-06 | 0 | 0 | 8.18e-06 | 0.0005% |
| Lead | treatment | 0 | 8.33e-07 | 0 | 0 | 8.33e-07 | 4.96E-07 |
| Lead cmpds | surface water | 3.68e-06 | 5.67e-11 | 0 | 4.98e-10 | 3.68e-06 | 0.0002% |
| Lead cmpds | treatment | 0 | 7.14e-06 | 0 | 0 | 7.14e-06 | 0.0004% |
| Lithium salts | surface water | 4.86e-11 | 0 | 0 | 0 | 4.86e-11 | 2.89E-11 |
| Magnesium (+2) | surface water | 5.13e-04 | 0 | 0 | 0 | 5.13e-04 | 0.0305% |
| Manganese | surface water | 0 | 2.29e-07 | 0 | 0 | 2.29e-07 | 1.36E-07 |
| Manganese cmpds | surface water | 1.48e-05 | 0 | 0 | 0 | 1.48e-05 | 0.0009% |
| Mercury | treatment | 0 | 8.33e-08 | 0 | 0 | 8.33e-08 | 4.96E-08 |
| Mercury | surface water | 9.08e-08 | 9.69e-08 | 0 | 0 | 1.88e-07 | 1.12E-07 |
| Mercury compounds | surface water | 5.82e-07 | 6.52e-14 | 0 | 1.62e-11 | 5.82e-07 | 3.47E-07 |
| Metals, remaining unspeciated | surface water | 3.55e-04 | 4.72e-04 | 0 | -2.45e-05 | 8.03e-04 | 0.0478% |
| Molybdenum (Mo II, Mo III, Mo IV, Mo V, Mo VI) | surface water | 1.88e-06 | 0 | 0 | 0 | 1.88e-06 | 0.0001% |
| Morpholine | surface water | 4.60e-09 | 0 | 0 | 0 | 4.60e-09 | 2.74E-09 |
| Nickel | surface water | 0 | 2.33e-07 | 0 | 0 | 2.33e-07 | 1.39E-07 |
| Nickel | treatment | 0 | 3.33e-06 | 0 | 0 | 3.33e-06 | 0.0002% |
| Nickel (+2) | surface water | 4.39e-07 | 0 | 0 | 0 | 4.39e-07 | 2.62E-07 |
| Nickel cmpds | surface water | 3.29e-06 | 2.84e-11 | 0 | -1.01e-12 | 3.29e-06 | 0.0002% |
| Nitrate | surface water | 1.97e-05 | 3.15e-06 | 0 | -1.27e-06 | 2.15e-05 | 0.0013% |
| Nitrates/nitrites | surface water | 8.00e-05 | 0 | 0 | 0 | 8.00e-05 | 0.0048% |
| Nitrites | surface water | 4.23e-07 | 0 | 0 | 0 | 4.23e-07 | 2.52E-07 |
| Nitrogen | surface water | 1.44e-05 | 7.98e-02 | 0 | 0 | 7.98e-02 | 4.7566% |
| Nitrogen | treatment | 0 | 1.26e-02 | 0 | 0 | 1.26e-02 | 0.7494% |

## Table J-14. LCD water outputs (wastewater and water pollutants) (kg/functional unit)

| Material | Disposition | Upstream | Mfg | Use | EOL | Total | % or Fraction of Total |
|---|---|---|---|---|---|---|---|
| Nitrogen dioxide | surface water | 3.04e-04 | 0 | 0 | 0 | 3.04e-04 | 0.0181% |
| Oil & grease | surface water | 2.18e-06 | 5.36e-04 | 0 | 0 | 5.38e-04 | 0.0321% |
| Oil & grease | treatment | 0 | 3.61e-03 | 0 | 0 | 3.61e-03 | 0.2150% |
| Organic phosphorus, unspecified | surface water | 0 | 2.29e-07 | 0 | 0 | 2.29e-07 | 1.36E-07 |
| Orthoboric acid | treatment | 0 | 1.31e-06 | 0 | 0 | 1.31e-06 | 0.0001% |
| Other nitrogen | surface water | 2.25e-04 | 7.66e-10 | 0 | -2.72e-11 | 2.25e-04 | 0.0134% |
| Other organics | surface water | 2.12e-05 | 0 | 0 | 0 | 2.12e-05 | 0.0013% |
| Oxalic acid | surface water | 1.89e-09 | 0 | 0 | 0 | 1.89e-09 | 1.13E-09 |
| o-xylene | surface water | 0 | 0 | 0 | 1.37e-10 | 1.37e-10 | 8.14E-11 |
| Phenol | surface water | 4.50e-05 | 1.76e-04 | 0 | -6.22e-06 | 2.14e-04 | 0.0128% |
| Phosphate (PO43-) | surface water | 1.11e-04 | 0 | 0 | 0 | 1.11e-04 | 0.0066% |
| Phosphates | surface water | 2.23e-07 | 2.83e-08 | 0 | 7.27e-10 | 2.52e-07 | 1.50E-07 |
| Phosphorus (yellow or white) | surface water | 1.92e-06 | 4.33e-03 | 0 | 0 | 4.33e-03 | 0.2581% |
| Phosphorus (yellow or white) | treatment | 0 | 6.91e-03 | 0 | 0 | 6.91e-03 | 0.4114% |
| Phosphorus pentoxide | surface water | 7.63e-09 | 0 | 0 | 0 | 7.63e-09 | 4.54E-09 |
| Polychlorinated biphenyls | surface water | 0 | 1.14e-08 | 0 | 0 | 1.14e-08 | 6.80E-09 |
| Polycyclic aromatic hydrocarbons | surface water | 2.87e-06 | 6.81e-11 | 0 | -2.41e-12 | 2.87e-06 | 0.0002% |
| Potassium (+1) | surface water | 2.46e-04 | 0 | 0 | 0 | 2.46e-04 | 0.0146% |
| Rubidium ion (Rb+) | surface water | 5.93e-08 | 0 | 0 | 0 | 5.93e-08 | 3.53E-08 |
| Salts (unspecified) | surface water | 2.54e-04 | 7.84e-05 | 0 | -2.78e-06 | 3.29e-04 | 0.0196% |
| Sand | surface water | 2.95e-09 | 0 | 0 | 0 | 2.95e-09 | 1.76E-09 |
| Saponifiable oils and fats | surface water | 7.30e-05 | 0 | 0 | 0 | 7.30e-05 | 0.0044% |
| Selenium | surface water | 2.99e-06 | 0 | 0 | 2.88e-11 | 2.99e-06 | 0.0002% |
| Silver compounds | surface water | 3.56e-09 | 0 | 0 | 5.26e-10 | 4.09e-09 | 2.43E-09 |
| Sodium (+1) | surface water | 1.73e-01 | 3.41e-01 | 0 | -2.03e-02 | 4.94e-01 | 29.4192% |
| Strontium (Sr II) | surface water | 9.60e-05 | 0 | 0 | 0 | 9.60e-05 | 0.0057% |
| Sulfate ion (-4) | surface water | 2.40e-02 | 2.94e-03 | 0 | -1.20e-06 | 2.69e-02 | 1.6033% |
| Sulfate ion (-4) | treatment | 0 | 1.32e-04 | 2.55e-02 | 4.84e-06 | 2.57e-02 | 1.5285% |
| Sulfide | surface water | 2.20e-06 | 9.86e-09 | 0 | -1.74e-09 | 2.20e-06 | 0.0001% |
| Sulfites | surface water | 4.80e-07 | 0 | 0 | 0 | 4.80e-07 | 2.86E-07 |
| Sulfur | surface water | 1.04e-11 | 0 | 0 | 0 | 1.04e-11 | 6.18E-12 |
| Suspended solids | surface water | 4.98e-03 | 5.80e-02 | 0 | -1.44e-03 | 6.15e-02 | 3.6643% |
| Suspended solids | treatment | 0 | 5.60e-03 | 6.65e-04 | 1.26e-07 | 6.26e-03 | 0.3732% |
| Tars (unspecified) | surface water | 5.06e-15 | 0 | 0 | 0 | 5.06e-15 | 3.01E-15 |
| Tetrachloroethylene | surface water | 1.26e-14 | 2.29e-08 | 0 | 1.74e-11 | 2.29e-08 | 1.37E-08 |
| Tin | surface water | 0 | 4.58e-07 | 0 | 0 | 4.58e-07 | 2.73E-07 |
| Tin (Sn++, Sn4+) | surface water | 5.11e-05 | 0 | 0 | 0 | 5.11e-05 | 0.0030% |
| Titanium tetrachloride | surface water | 3.52e-05 | 0 | 0 | 0 | 3.52e-05 | 0.0021% |
| TOCs | surface water | 8.96e-04 | 4.25e-08 | 0 | -1.51e-09 | 8.96e-04 | 0.0534% |
| Toluene | surface water | 1.60e-06 | 6.24e-10 | 0 | 5.83e-10 | 1.60e-06 | 0.0001% |
| Trichloroethylene | surface water | 7.66e-13 | 2.29e-08 | 0 | 1.74e-11 | 2.29e-08 | 1.37E-08 |
| Triethylene glycol | surface water | 1.86e-06 | 0 | 0 | 0 | 1.86e-06 | 0.0001% |
| Vanadium (V3+, V5+) | surface water | 3.18e-06 | 0 | 0 | 0 | 3.18e-06 | 0.0002% |
| Vinyl chloride | surface water | 0 | 0 | 0 | 3.48e-11 | 3.48e-11 | 2.07E-11 |
| VOCs, remaining unspeciated | surface water | 2.07e-06 | 0 | 0 | 0 | 2.07e-06 | 0.0001% |
| Waste metals, unspecified | surface water | 9.37e-05 | 0 | 0 | 0 | 9.37e-05 | 0.0056% |
| Waste oil | surface water | 1.75e-03 | 4.87e-03 | 0 | -2.06e-04 | 6.41e-03 | 0.3817% |
| Xylene (mixed isomers) | surface water | 6.41e-06 | 0 | 0 | 1.76e-10 | 6.41e-06 | 0.0004% |
| Zinc (+2) | surface water | 7.41e-06 | 1.40e-09 | 0 | -2.09e-10 | 7.41e-06 | 0.0004% |
| Zinc (elemental) | surface water | 0 | 2.63e-06 | 0 | 0 | 2.63e-06 | 0.0002% |

## Table J-14. LCD water outputs (wastewater and water pollutants) (kg/functional unit)

| Material | Disposition | Upstream | Mfg | Use | EOL | Total | % or Fraction of Total |
|---|---|---|---|---|---|---|---|
| Total water pollutants | | 4.60e-01 | 1.23e+00 | 2.62e-02 | -4.09e-02 | 1.68e+00 | 100.00% |

## Table J-15. LCD hazardous waste outputs (kg/functional unit)

| Material | Disposition | Upstream | Mfg | Use | EOL | Total | % or Fraction of Total |
|---|---|---|---|---|---|---|---|
| Acetic acid | landfill | 0 | 4.46E-03 | 0 | 0 | 4.46E-03 | 7.09E-04 |
| Acetone | treatment | 0 | 2.77E-02 | 0 | 0 | 2.77E-02 | 4.40E-03 |
| Acid waste (D002 waste) | treatment | 0 | 1.19E-03 | 0 | 0 | 1.19E-03 | 1.89E-04 |
| Barium debris (D008 waste) | landfill | 0 | 9.91E-06 | 0 | 0 | 9.91E-06 | 1.57E-06 |
| Chrome debris (D007 waste) | treatment | 0 | 6.83E-06 | 0 | 0 | 6.83E-06 | 1.08E-06 |
| Chrome liquid waste (D007 waste) | recycling/reuse | 0 | 4.54E-04 | 0 | 0 | 4.54E-04 | 7.22E-05 |
| Chromium | landfill | 0 | 1.52E-06 | 0 | 0 | 1.52E-06 | 2.41E-07 |
| EOL LCD Monitor, landfilled | landfill | 0 | 0 | 0 | 1.64E+00 | 1.64E+00 | 26.13% |
| Ferric chloride | recycling/reuse | 0 | 1.37E-02 | 0 | 0 | 1.37E-02 | 2.18E-03 |
| Flammable liquids (F003 waste) | treatment | 0 | 9.13E-04 | 0 | 0 | 9.13E-04 | 1.45E-04 |
| Hazardous waste, unspecified | landfill | 6.72E-03 | 2.97E-02 | 0 | -1.05E-03 | 3.54E-02 | 5.62E-03 |
| Hazardous waste, unspecified | recycling/reuse | 0 | 1.42E-02 | 0 | 0 | 1.42E-02 | 2.26E-03 |
| Hazardous waste, unspecified | treatment | 0 | 6.16E-02 | 0 | 0 | 6.16E-02 | 9.78E-03 |
| HCFC-225ca | recycling/reuse | 0 | 3.11E-05 | 0 | 0 | 3.11E-05 | 4.94E-06 |
| HCFC-225cb | recycling/reuse | 0 | 3.11E-05 | 0 | 0 | 3.11E-05 | 4.94E-06 |
| Hydrofluoric acid | landfill | 0 | 8.24E-05 | 0 | 0 | 8.24E-05 | 1.31E-05 |
| Isopropyl alcohol | recycling/reuse | 0 | 1.69E-01 | 0 | 0 | 1.69E-01 | 2.69% |
| Isopropyl alcohol | treatment | 0 | 1.91E+00 | 0 | 0 | 1.91E+00 | 30.41% |
| Mercury | recycling/reuse | 0 | 2.00E-06 | 0 | 0 | 2.00E-06 | 3.18E-07 |
| Nitric acid | landfill | 0 | 3.43E-04 | 0 | 0 | 3.43E-04 | 5.45E-05 |
| Phosphoric acid | landfill | 0 | 1.44E-02 | 0 | 0 | 1.44E-02 | 2.29E-03 |
| PWB-Decontaminating debris | treatment | 0 | 6.85E-03 | 0 | 0 | 6.85E-03 | 1.09E-03 |
| PWB-Lead contaminated waste oil | treatment | 0 | 5.14E-03 | 0 | 0 | 5.14E-03 | 8.16E-04 |
| PWB-Route dust | recycling/reuse | 0 | 5.31E-03 | 0 | 0 | 5.31E-03 | 8.43E-04 |
| PWB-Solder dross | recycling/reuse | 0 | 2.96E-02 | 0 | 0 | 2.96E-02 | 4.70E-03 |
| PWB-Waste cupric etchant | recycling/reuse | 0 | 9.93E-02 | 0 | 0 | 9.93E-02 | 1.58% |
| Remover, unspecified | recycling/reuse | 0 | 8.84E-02 | 0 | 0 | 8.84E-02 | 1.40% |
| Remover, unspecified | treatment | 0 | 3.03E-01 | 0 | 0 | 3.03E-01 | 4.81% |
| Rinse, unspecified | recycling/reuse | 0 | 4.67E-02 | 0 | 0 | 4.67E-02 | 7.42E-03 |
| Silver | landfill | 0 | 2.72E-09 | 0 | 0 | 2.72E-09 | 4.33E-10 |
| Sodium sulfate | recycling/reuse | 0 | 2.44E-01 | 0 | 0 | 2.44E-01 | 3.89% |
| Spent solvent (non-halogenated) | treatment | 0 | 4.66E-02 | 0 | 0 | 4.66E-02 | 7.41E-03 |
| Spent solvent (with halogenated materials) | treatment | 0 | 1.55E-02 | 0 | 0 | 1.55E-02 | 2.47E-03 |
| Spent solvents (F003 waste) | treatment | 0 | 2.74E-04 | 0 | 0 | 2.74E-04 | 4.35E-05 |
| Tetramethyl ammonium hydroxide | recycling/reuse | 0 | 1.42E-01 | 0 | 0 | 1.42E-01 | 2.26% |
| Thinner, unspecified | treatment | 0 | 5.40E-01 | 0 | 0 | 5.40E-01 | 8.57% |
| Unspecified sludge | land (other than | 0 | 3.09E-02 | 0 | 0 | 3.09E-02 | 4.91E-03 |
| Waste acid (chrome mixed acid) | recycling/reuse | 0 | 7.18E-03 | 0 | 0 | 7.18E-03 | 1.14E-03 |
| Waste acid (mainly HF) | recycling/reuse | 0 | 5.69E-01 | 0 | 0 | 5.69E-01 | 9.04% |
| Waste acid (mainly HF) | treatment | 0 | 1.36E-01 | 0 | 0 | 1.36E-01 | 2.15% |
| Waste acid (mostly 3% HCl solution) | recycling/reuse | 0 | 1.82E-04 | 0 | 0 | 1.82E-04 | 2.89E-05 |
| Waste acids, unspecified | recycling/reuse | 0 | 3.24E-02 | 0 | 0 | 3.24E-02 | 5.15E-03 |
| Waste Batch (Ba, Pb) (D008 waste) | landfill | 0 | 6.55E-05 | 0 | 0 | 6.55E-05 | 1.04E-05 |
| Waste CCFL, with lead | treatment | 0 | 8.17E-08 | 0 | 0 | 8.17E-08 | 1.30E-08 |
| Waste CCFL, with mercury | treatment | 0 | 8.17E-10 | 0 | 0 | 8.17E-10 | 1.30E-10 |
| Waste glass, with mercury | landfill | 0 | 1.05E-10 | 0 | 0 | 1.05E-10 | 1.67E-11 |
| Waste metals, unspecified | recycling/reuse | 0 | 1.17E-03 | 0 | 0 | 1.17E-03 | 1.85E-04 |
| Waste solvent (photoresist) | recycling/reuse | 0 | 2.05E-02 | 0 | 0 | 2.05E-02 | 3.26E-03 |
| Waste solvent (photoresist) | treatment | 0 | 2.17E-02 | 0 | 0 | 2.17E-02 | 3.45E-03 |
| Total hazardous waste | | 6.72E-03 | 4.64E+00 | 0.00E+00 | 1.64E+00 | 6.29E+00 | 100.00% |

## Table J-16. LCD solid waste outputs (kg/functional unit)

| Material | Disposition | Upstream | Mfg | Use | EOL | Total | % or Fraction of Total |
|---|---|---|---|---|---|---|---|
| abrasive sludge | recycling/reuse | 0 | 1.95E-03 | 0 | 0 | 1.95E-03 | 3.73E-05 |
| acid absorbent | landfill | 0 | 3.77E-06 | 0 | 0 | 3.77E-06 | 7.20E-08 |
| Aluminum (elemental) | landfill | 1.23E-05 | 0 | 0 | 0 | 1.23E-05 | 2.35E-07 |
| Aluminum scrap | recycling/reuse | 2.55E-07 | 8.77E-06 | 0 | 9.52E-03 | 9.53E-03 | 1.82E-04 |
| Aluminum scrap, Wabash 319 | recycling/reuse | 0 | 2.37E-08 | 0 | 0 | 2.37E-08 | 4.53E-10 |
| Arsenic | landfill | 4.91E-09 | 0 | 0 | 0 | 4.91E-09 | 9.38E-11 |
| Bauxite residues | landfill | 1.70E-05 | 5.87E-04 | 0 | -1.96E-05 | 5.84E-04 | 1.12E-05 |
| blasting media | landfill | 0 | 1.70E-05 | 0 | 0 | 1.70E-05 | 3.24E-07 |
| Broken CCFL | landfill | 0 | 2.69E-07 | 0 | 0 | 2.69E-07 | 5.14E-09 |
| Cadmium | landfill | 4.92E-10 | 0 | 0 | 0 | 4.92E-10 | 9.40E-12 |
| Calcium | landfill | 4.91E-05 | 0 | 0 | 0 | 4.91E-05 | 9.38E-07 |
| Carbon | landfill | 3.79E-05 | 0 | 0 | 0 | 3.79E-05 | 7.24E-07 |
| CARBON STEEL SCRAP | recycling/reuse | 0 | 0 | 0 | 4.58E-01 | 4.58E-01 | 8.75E-03 |
| Cardboard | treatment | 0 | 1.82E-05 | 0 | 0 | 1.82E-05 | 3.47E-07 |
| Chromium (III) | landfill | 3.07E-08 | 0 | 0 | 0 | 3.07E-08 | 5.87E-10 |
| Chromium (VI) | landfill | 3.07E-08 | 0 | 0 | 0 | 3.07E-08 | 5.87E-10 |
| Cinders from LCD glass mfg | landfill | 0 | 3.83E-04 | 0 | 0 | 3.83E-04 | 7.31E-06 |
| Coal waste | landfill | 0 | 2.28E+00 | 1.90E+01 | 3.60E-03 | 2.13E+01 | 40.64% |
| Cobalt | landfill | 2.36E-10 | 0 | 0 | 0 | 2.36E-10 | 4.51E-12 |
| Cobalt nitrate | treatment | 0 | 2.83E-06 | 0 | 0 | 2.83E-06 | 5.40E-08 |
| Copper | landfill | 1.18E-09 | 0 | 0 | 0 | 1.18E-09 | 2.26E-11 |
| Diesel fuel | treatment | 0 | 1.88E-06 | 0 | 0 | 1.88E-06 | 3.60E-08 |
| Dust | treatment | 0 | 1.59E-04 | 0 | 0 | 1.59E-04 | 3.03E-06 |
| Dust/sludge | landfill | 0 | 8.80E-01 | 7.34E+00 | 1.39E-03 | 8.23E+00 | 15.72% |
| EOL LCD Monitor, incinerated | treatment | 0 | 0 | 0 | 9.75E-01 | 9.75E-01 | 1.86% |
| EOL LCD Monitor, landfilled | landfill | 0 | 0 | 0 | 8.94E-01 | 8.94E-01 | 1.71% |
| EOL LCD Monitor, recycled | recycling/reuse | 0 | 0 | 0 | 9.75E-01 | 9.75E-01 | 1.86% |
| EOL LCD Monitor, remanufactured | recycling/reuse | 0 | 0 | 0 | 9.75E-01 | 9.75E-01 | 1.86% |
| FGD sludge | landfill | 2.45E-02 | 1.09E-02 | 0 | -6.11E-04 | 3.48E-02 | 6.64E-04 |
| Fly/bottom ash | landfill | 0 | 5.70E-01 | 4.75E+00 | 9.01E-04 | 5.32E+00 | 10.16% |
| Iron | landfill | 2.46E-05 | 0 | 0 | 0 | 2.46E-05 | 4.70E-07 |
| Iron scrap | recycling/reuse | 1.67E-01 | 0 | 0 | 1.10E+00 | 1.27E+00 | 2.42% |
| Isopropyl alcohol | recycling/reuse | 0 | 2.53E-02 | 0 | 0 | 2.53E-02 | 4.84E-04 |
| Isopropyl alcohol | treatment | 0 | 1.03E-02 | 0 | 0 | 1.03E-02 | 1.97E-04 |
| LCD glass | recycling/reuse | 0 | 0 | 0 | 8.77E-02 | 8.77E-02 | 1.68E-03 |
| LCD glass EP dust | landfill | 0 | 4.77E-05 | 0 | 0 | 4.77E-05 | 9.12E-07 |
| LCD glass EP dust | recycling/reuse | 0 | 2.32E-04 | 0 | 0 | 2.32E-04 | 4.43E-06 |
| LCD glass, unspecified | landfill | 0 | 1.13E-03 | 0 | 0 | 1.13E-03 | 2.15E-05 |
| LCD panel waste | landfill | 0 | 2.43E-02 | 0 | 0 | 2.43E-02 | 4.64E-04 |
| Lead | landfill | 5.42E-09 | 0 | 0 | 0 | 5.42E-09 | 1.04E-10 |
| Manganese | landfill | 4.91E-07 | 0 | 0 | 0 | 4.91E-07 | 9.38E-09 |
| Mercury | landfill | 3.33E-11 | 0 | 0 | 0 | 3.33E-11 | 6.36E-13 |
| Mineral waste | landfill | 2.20E-01 | 1.26E-04 | 0 | -4.46E-06 | 2.21E-01 | 4.21E-03 |
| Mining waste | landfill | 1.41E-01 | 0 | 0 | -1.23E-06 | 1.41E-01 | 2.69E-03 |
| Mixed industrial (waste) | landfill | 4.34E-02 | 4.83E-02 | 0 | -1.35E-03 | 9.04E-02 | 1.73E-03 |
| Nickel | landfill | 1.77E-09 | 0 | 0 | 0 | 1.77E-09 | 3.38E-11 |
| Nickel nitrate | treatment | 0 | 2.83E-06 | 0 | 0 | 2.83E-06 | 5.40E-08 |
| Nitrogen | landfill | 9.83E-09 | 0 | 0 | 0 | 9.83E-09 | 1.88E-10 |
| Non mineral waste (inert) | landfill | 9.80E-06 | 0 | 0 | 0 | 9.80E-06 | 1.87E-07 |
| Non toxic chemical waste (unspecified) | landfill | 5.72E-03 | 2.95E-05 | 0 | -1.05E-06 | 5.75E-03 | 1.10E-04 |

## Table J-16. LCD solid waste outputs (kg/functional unit)

| Material | Disposition | Upstream | Mfg | Use | EOL | Total | % or Fraction of Total |
|---|---|---|---|---|---|---|---|
| Oily rags & filter media | landfill | 0 | 1.51E-05 | 0 | 0 | 1.51E-05 | 2.88E-07 |
| Oily rags & filter media | recycling/reuse | 0 | 1.88E-06 | 0 | 0 | 1.88E-06 | 3.60E-08 |
| parts cleaner solvent | recycling/reuse | 0 | 3.77E-06 | 0 | 0 | 3.77E-06 | 7.20E-08 |
| Phosphorus (yellow or white) | landfill | 6.29E-07 | 0 | 0 | 0 | 6.29E-07 | 1.20E-08 |
| Plating process sludge | landfill | 0 | 1.52E-05 | 0 | 0 | 1.52E-05 | 2.90E-07 |
| Polycarbonate | recycling/reuse | 0 | 0 | 0 | 3.90E-01 | 3.90E-01 | 7.46E-03 |
| Polyester resin | recycling/reuse | 0 | 3.20E-02 | 0 | 0 | 3.20E-02 | 6.11E-04 |
| Polyethylene, foamed | treatment | 0 | 9.99E-04 | 0 | 0 | 9.99E-04 | 1.91E-05 |
| Polyethylene/polypropylene waste | treatment | 0 | 2.72E-03 | 0 | 0 | 2.72E-03 | 5.20E-05 |
| Potassium Carbonate | landfill | 0 | 1.53E-04 | 0 | 0 | 1.53E-04 | 2.91E-06 |
| Printed wiring board (PWB) | landfill | 0 | 7.50E-03 | 0 | 0 | 7.50E-03 | 1.43E-04 |
| PWB-Drill dust | landfill | 0 | 6.59E-03 | 0 | 0 | 6.59E-03 | 1.26E-04 |
| Remover, unspecified | treatment | 0 | 3.09E-02 | 0 | 0 | 3.09E-02 | 5.90E-04 |
| Sewage sludge (unspecified) | landfill | 3.25E-05 | 0 | 0 | 0 | 3.25E-05 | 6.22E-07 |
| Slag and ash | recycling/reuse | 8.02E+00 | 3.40E+00 | 0 | -9.67E+00 | 1.75E+00 | 3.35% |
| Slag and ash | landfill | 8.19E-02 | 3.49E-02 | 0 | -1.99E-03 | 1.15E-01 | 2.19E-03 |
| sludge (calcium fluoride, CaF2) | recycling/reuse | 0 | 8.13E-04 | 0 | 0 | 8.13E-04 | 1.55E-05 |
| Sludge from LCD glass mfg | landfill | 0 | 4.06E-05 | 0 | 0 | 4.06E-05 | 7.77E-07 |
| Sodium Carbonate | landfill | 0 | 1.53E-04 | 0 | 0 | 1.53E-04 | 2.91E-06 |
| Stannous sludge | recycling/reuse | 3.25E-04 | 0 | 0 | 0 | 3.25E-04 | 6.22E-06 |
| Steel scrap (tinplated) | recycling/reuse | 7.73E-02 | 0 | 0 | 0 | 7.73E-02 | 1.48E-03 |
| Sulfur | landfill | 7.37E-06 | 0 | 0 | 0 | 7.37E-06 | 1.41E-07 |
| Unspecified nonhazardous waste | recycling/reuse | 0 | 1.26E-04 | 0 | 0 | 1.26E-04 | 2.40E-06 |
| Unspecified sludge | landfill | 0 | 3.56E-04 | 0 | 0 | 3.56E-04 | 6.80E-06 |
| Unspecified sludge | recycling/reuse | 0 | 8.46E-01 | 0 | 0 | 8.46E-01 | 1.62% |
| Unspecified sludge | treatment | 0 | 5.73E-02 | 0 | 0 | 5.73E-02 | 1.09E-03 |
| Unspecified solid waste | landfill | 2.40E+00 | 0 | 0 | -5.10E-01 | 1.89E+00 | 3.62% |
| Unspecified solid waste | recycling/reuse | 1.50E+00 | 2.11E-01 | 0 | 0 | 1.71E+00 | 3.27% |
| Unspecified solid waste | treatment | 0 | 1.63E+00 | 0 | 0 | 1.63E+00 | 3.11% |
| Unspecified solid waste (incinerated) | treatment | 4.61E-04 | 6.44E-04 | 0 | -3.84E-05 | 1.07E-03 | 2.04E-05 |
| Unspecified waste | recycling/reuse | 4.05E-01 | 1.72E-01 | 0 | -9.83E-03 | 5.67E-01 | 1.08E-02 |
| Unspecified waste | landfill | 0 | 0 | 0 | -9.74E-02 | -9.74E-02 | -1.86E-03 |
| Used silica gel | landfill | 0 | 6.22E-04 | 0 | 0 | 6.22E-04 | 1.19E-05 |
| Waste acid (containing F and detergents) | landfill | 0 | 2.70E-01 | 0 | 0 | 2.70E-01 | 5.16E-03 |
| Waste acids, unspecified | treatment | 0 | 1.05E-01 | 0 | 0 | 1.05E-01 | 2.00E-03 |
| Waste alkali (color filter developer, | recycling/reuse | 0 | 8.91E-02 | 0 | 0 | 8.91E-02 | 1.70E-03 |
| Waste alkali, unspecified | recycling/reuse | 0 | 3.23E-01 | 0 | 0 | 3.23E-01 | 6.18E-03 |
| Waste alkali, unspecified | treatment | 0 | 1.95E-06 | 0 | 0 | 1.95E-06 | 3.73E-08 |
| Waste backlight casing (PC) | landfill | 0 | 1.46E-05 | 0 | 0 | 1.46E-05 | 2.79E-07 |
| Waste backlight light guide (PMMA) | landfill | 0 | 1.52E-03 | 0 | 0 | 1.52E-03 | 2.90E-05 |
| Waste LCD glass | landfill | 0 | 2.63E-01 | 0 | 0 | 2.63E-01 | 5.03E-03 |
| Waste LCD glass | recycling/reuse | 0 | 7.20E-01 | 0 | 0 | 7.20E-01 | 1.38% |
| Waste metals, unspecified | recycling/reuse | 0 | 2.93E-03 | 0 | 0 | 2.93E-03 | 5.61E-05 |
| Waste oil | treatment | 0 | 1.64E-02 | 0 | 0 | 1.64E-02 | 3.14E-04 |
| Waste oil | landfill | 3.17E-05 | 0 | 0 | 0 | 3.17E-05 | 6.05E-07 |
| Waste plastic from LCD modules | recycling/reuse | 0 | 7.40E-02 | 0 | 0 | 7.40E-02 | 1.41E-03 |
| Waste plastic from LCD modules | treatment | 0 | 4.03E-01 | 0 | 0 | 4.03E-01 | 7.70E-03 |
| Waste plastics from LCD monitor | landfill | 0 | 4.05E-02 | 0 | 0 | 4.05E-02 | 7.75E-04 |
| Waste refractory | landfill | 0 | 1.13E-04 | 0 | 0 | 1.13E-04 | 2.16E-06 |
| Zinc (elemental) | landfill | 1.96E-07 | 0 | 0 | 0 | 1.96E-07 | 3.75E-09 |

## Table J-16. LCD solid waste outputs (kg/functional unit)

| Material | Disposition | Upstream | Mfg | Use | EOL | Total | % or Fraction of Total |
|---|---|---|---|---|---|---|---|
| Total solid waste | | 1.31E+01 | 1.26E+01 | 3.11E+01 | -4.42E+00 | 5.23E+01 | 100.00% |

## Table J-17. LCD radioactive waste outputs (kg/functional unit)

| Material | Disposition | Upstream | Mfg | Use | EOL | Total | % of Total |
|---|---|---|---|---|---|---|---|
| Highly radioactive waste (Class C) | landfill | 2.72e-06 | 0 | 0 | 0 | 2.72e-06 | 0.18% |
| Low-level radioactive waste | landfill | 1.28e-04 | 3.74e-04 | 6.56e-04 | 1.24e-07 | 1.16e-03 | 78.49% |
| Radioactive waste (unspecified) | landfill | 5.77e-06 | 0 | 0 | 0 | 5.77e-06 | 0.39% |
| Uranium, depleted | landfill | 0 | 1.12e-04 | 1.97e-04 | 3.73e-08 | 3.09e-04 | 20.93% |
| **Total radioactive waste** | | 1.37e-04 | 4.87e-04 | 8.52e-04 | 1.62e-07 | 1.48e-03 | 100.00% |

## Table J-18. LCD radioactivity outputs (Bq/functional unit)

| Material | Disposition | Upstream | Mfg | Use | EOL | Total | % or Fraction of Total |
|---|---|---|---|---|---|---|---|
| Americium-241 (isotope) | landfill | 9.42e+01 | 0 | 0 | 0 | 9.42e+01 | 0.0002% |
| Americium-243 (isotope) | landfill | 2.05e+00 | 0 | 0 | 0 | 2.05e+00 | 5.11E-08 |
| Antimony-124 (isotope) | surface water | 2.12e-02 | 0 | 0 | 0 | 2.12e-02 | 5.29E-10 |
| Antimony-124 (isotope) | treatment | 0 | 1.68e+00 | 2.94e+00 | 5.59e-04 | 4.63e+00 | 1.15E-07 |
| Antimony-125 (isotope) | treatment | 0 | 6.70e+00 | 1.17e+01 | 2.23e-03 | 1.84e+01 | 4.59E-07 |
| Argon-41 (isotope) | air | 0 | 3.40e+03 | 5.96e+03 | 1.13e+00 | 9.36e+03 | 0.0233% |
| Barium-140 (isotope) | treatment | 0 | 1.25e-01 | 2.18e-01 | 4.14e-05 | 3.43e-01 | 8.55E-09 |
| Bromine-89 (isotope) | air | 0 | 3.93e-04 | 6.89e-04 | 1.31e-07 | 1.08e-03 | 2.70E-11 |
| Bromine-90 (isotope) | air | 0 | 1.60e-04 | 2.80e-04 | 5.32e-08 | 4.40e-04 | 1.10E-11 |
| Carbon-14 (isotope) | air | 9.35e+00 | 0 | 0 | 0 | 9.35e+00 | 2.33E-07 |
| Cesium-134 (isotope) | air | 3.58e-04 | 1.08e-02 | 1.89e-02 | 3.59e-06 | 3.01e-02 | 7.50E-10 |
| Cesium-134 (isotope) | surface water | 1.87e-02 | 0 | 0 | 0 | 1.87e-02 | 4.65E-10 |
| Cesium-134 (isotope) | treatment | 0 | 4.49e+00 | 7.87e+00 | 1.49e-03 | 1.24e+01 | 3.08E-07 |
| Cesium-135 (isotope) | landfill | 4.59e+04 | 0 | 0 | 0 | 4.59e+04 | 0.1145% |
| Cesium-136 (isotope) | treatment | 0 | 1.75e-03 | 3.37e-01 | 6.40e-05 | 3.39e-01 | 8.45E-09 |
| Cesium-137 (isotope) | air | 3.58e-04 | 8.15e-02 | 1.43e-01 | 2.71e-05 | 2.25e-01 | 5.60E-09 |
| Cesium-137 (isotope) | landfill | 1.28e-01 | 0 | 0 | 0 | 1.28e-01 | 3.20E-09 |
| Cesium-137 (isotope) | surface water | 2.74e-02 | 0 | 0 | 0 | 2.74e-02 | 6.82E-10 |
| Cesium-137 (isotope) | treatment | 0 | 6.75e+00 | 1.18e+01 | 2.24e-03 | 1.86e+01 | 4.63E-07 |
| Chromium-51 (isotope) | air | 0 | 2.13e-01 | 3.74e-01 | 7.09e-05 | 5.87e-01 | 1.46E-08 |
| Chromium-51 (isotope) | treatment | 0 | 8.10e+00 | 1.42e+01 | 2.69e-03 | 2.23e+01 | 0.0001% |
| Cobalt-57 (isotope) | air | 0 | 5.74e-04 | 1.00e-03 | 1.91e-07 | 1.58e-03 | 3.94E-11 |
| Cobalt-57 (isotope) | treatment | 0 | 1.96e-01 | 3.43e-01 | 6.52e-05 | 5.40e-01 | 1.35E-08 |
| Cobalt-58 (isotope) | air | 3.58e-04 | 6.66e+00 | 1.28e+03 | 2.43e-01 | 1.29e+03 | 0.0032% |
| Cobalt-58 (isotope) | surface water | 6.14e-02 | 0 | 0 | 0 | 6.14e-02 | 1.53E-09 |
| Cobalt-58 (isotope) | treatment | 0 | 7.98e+01 | 1.40e+02 | 2.65e-02 | 2.20e+02 | 0.0005% |
| Cobalt-60 (isotope) | air | 3.58e-04 | 5.51e-02 | 9.65e-02 | 1.83e-05 | 1.52e-01 | 3.79E-09 |
| Cobalt-60 (isotope) | surface water | 3.84e-02 | 0 | 0 | 0 | 3.84e-02 | 9.56E-10 |
| Cobalt-80 (isotope) | treatment | 0 | 2.09e+01 | 3.67e+01 | 6.96e-03 | 5.76e+01 | 0.0001% |
| Curium-244 (isotope) | landfill | 1.91e+02 | 0 | 0 | 0 | 1.91e+02 | 0.0005% |
| Curium-245 (isotope) | landfill | 2.13e-02 | 0 | 0 | 0 | 2.13e-02 | 5.31E-10 |
| Iodine-129 (isotope) | landfill | 3.01e-03 | 0 | 0 | 0 | 3.01e-03 | 7.50E-11 |
| Iodine-131 (isotope) | air | 2.10e-03 | 2.57e-01 | 4.51e-01 | 8.56e-05 | 7.11e-01 | 1.77E-08 |
| Iodine-131 (isotope) | surface water | 2.33e-03 | 0 | 0 | 0 | 2.33e-03 | 5.80E-11 |
| Iodine-131 (isotope) | treatment | 0 | 3.73e+00 | 6.54e+00 | 1.24e-03 | 1.03e+01 | 2.56E-07 |
| Iodine-132 (isotope) | air | 0 | 5.23e-02 | 9.16e-02 | 1.74e-05 | 1.44e-01 | 3.59E-09 |
| Iodine-132 (isotope) | treatment | 0 | 1.41e+00 | 2.48e+00 | 4.70e-04 | 3.89e+00 | 9.70E-08 |
| Iodine-133 (isotope) | air | 4.09e-03 | 2.39e+02 | 4.18e+02 | 7.94e-02 | 6.57e+02 | 0.0016% |
| Iodine-133 (isotope) | treatment | 0 | 1.60e+00 | 2.80e+00 | 5.32e-04 | 4.40e+00 | 1.10E-07 |
| Iodine-134 (isotope) | air | 0 | 2.71e-01 | 4.74e-01 | 9.00e-05 | 7.45e-01 | 1.86E-08 |
| Iodine-135 (isotope) | air | 0 | 1.36e-02 | 2.38e-02 | 4.52e-06 | 3.74e-02 | 9.33E-10 |
| Iodine-135 (isotope) | treatment | 0 | 1.15e+00 | 2.01e+00 | 3.82e-04 | 3.16e+00 | 7.88E-08 |
| Iron-55 (isotope) | treatment | 0 | 1.91e+01 | 3.34e+01 | 6.34e-03 | 5.25e+01 | 0.0001% |
| Iron-59 (isotope) | treatment | 0 | 9.79e-01 | 1.72e+00 | 3.25e-04 | 2.69e+00 | 6.72E-08 |
| Krypton-85 (isotope) | air | 5.45e+01 | 5.64e+03 | 9.88e+03 | 1.88e+00 | 1.56e+04 | 0.0388% |
| Krypton-85M (isotope) | air | 0 | 2.73e+02 | 4.79e+02 | 9.09e-02 | 7.53e+02 | 0.0019% |
| Krypton-85M (isotope) | treatment | 0 | 5.04e+00 | 8.83e+00 | 1.68e-03 | 1.39e+01 | 3.46E-07 |
| Krypton-87 (isotope) | air | 0 | 1.02e+02 | 1.78e+02 | 3.38e-02 | 2.80e+02 | 0.0007% |
| Krypton-88 (isotope) | air | 0 | 4.77e+02 | 8.37e+02 | 1.59e-01 | 1.31e+03 | 0.0033% |
| Lanthanum-140 (isotope) | treatment | 0 | 1.33e-01 | 2.34e-01 | 4.43e-05 | 3.67e-01 | 9.15E-09 |

## Table J-18. LCD radioactivity outputs (Bq/functional unit)

| Material | Disposition | Upstream | Mfg | Use | EOL | Total | % or Fraction of Total |
|---|---|---|---|---|---|---|---|
| Lead-210 (isotope) | air | 3.21e-01 | 0 | 0 | 0 | 3.21e-01 | 7.99E-09 |
| Manganese-54 (isotope) | air | 0 | 3.03e-03 | 5.30e-03 | 1.01e-06 | 8.33e-03 | 2.08E-10 |
| Manganese-54 (isotope) | surface water | 3.07e-03 | 0 | 0 | 0 | 3.07e-03 | 7.65E-11 |
| Manganese-54 (isotope) | treatment | 0 | 5.34e+00 | 9.35e+00 | 1.77e-03 | 1.47e+01 | 3.66E-07 |
| Molybdenum-99 (isotope) | treatment | 0 | 1.01e+07 | 1.76e+07 | 3.35e+03 | 2.77e+07 | 69.0936% |
| Neptunium-237 (isotope) | landfill | 2.95e+01 | 0 | 0 | 0 | 2.95e+01 | 0.0001% |
| Niobium-95 (isotope) | air | 0 | 1.20e-04 | 2.11e-04 | 4.00e-08 | 3.31e-04 | 8.25E-12 |
| Niobium-95 (isotope) | treatment | 0 | 1.37e+00 | 2.41e+00 | 4.57e-04 | 3.78e+00 | 9.43E-08 |
| Palladium-107 (isotope) | landfill | 1.04e-02 | 0 | 0 | 0 | 1.04e-02 | 2.58E-10 |
| Plutonium-239 (isotope) | landfill | 3.57e+04 | 0 | 0 | 0 | 3.57e+04 | 0.0890% |
| Plutonium-240 (isotope) | landfill | 5.08e+04 | 0 | 0 | 0 | 5.08e+04 | 0.1267% |
| Plutonium-241 (isotope) | landfill | 1.18e+07 | 0 | 0 | 0 | 1.18e+07 | 29.3291% |
| Plutonium-242 (isotope) | landfill | 1.92e+02 | 0 | 0 | 0 | 1.92e+02 | 0.0005% |
| Polonium-210 (isotope) | air | 5.52e-01 | 0 | 0 | 0 | 5.52e-01 | 1.38E-08 |
| Potassium-40 (isotope) | air | 8.57e-02 | 0 | 0 | 0 | 8.57e-02 | 2.14E-09 |
| Protactinium-234 (isotope) | air | 5.06e-03 | 0 | 0 | 0 | 5.06e-03 | 1.26E-10 |
| Protactinium-234 (isotope) | surface water | 9.36e-02 | 0 | 0 | 0 | 9.36e-02 | 2.33E-09 |
| Radioactive aerosols and halogenes (unspecified) | air | 2.81e-02 | 0 | 0 | 0 | 2.81e-02 | 7.01E-10 |
| radioactive gas (unspecified) | air | 8.98e+02 | 0 | 0 | 0 | 8.98e+02 | 0.0022% |
| Radioactive substance (unspecified) | air | 1.29e+00 | 4.44e+01 | 0 | -1.57e+00 | 4.41e+01 | 0.0001% |
| Radioactive substance (unspecified) | surface water | 1.20e-02 | 4.11e-01 | | -1.46e-02 | 4.09e-01 | 1.02E-08 |
| Radium-222 (isotope) | air | 3.26e+00 | 0 | 0 | 0 | 3.26e+00 | 8.13E-08 |
| Radium-224 (isotope) | surface water | 2.97e-01 | 0 | 0 | 0 | 2.97e-01 | 7.40E-09 |
| Radium-226 (isotope) | air | 4.31e-01 | 0 | 0 | 0 | 4.31e-01 | 1.07E-08 |
| Radium-226 (isotope) | landfill | 2.44e+02 | 0 | 0 | 0 | 2.44e+02 | 0.0006% |
| Radium-226 (isotope) | surface water | 1.80e+02 | 0 | 0 | 0 | 1.80e+02 | 0.0004% |
| Radium-228 (isotope) | air | 4.23e-02 | 0 | 0 | 0 | 4.23e-02 | 1.05E-09 |
| Radium-228 (isotope) | surface water | 5.93e-01 | 0 | 0 | 0 | 5.93e-01 | 1.48E-08 |
| Radon-220 (isotope) | air | 9.93e-01 | 0 | 0 | 0 | 9.93e-01 | 2.47E-08 |
| Radon-222 (isotope) | air | 4.30e+04 | 0 | 0 | 0 | 4.30e+04 | 0.1072% |
| Rubidium-88 (isotope) | air | 0 | 1.12e+00 | 1.96e+00 | 3.72e-04 | 3.08e+00 | 7.67E-08 |
| Ruthenium-103 (isotope) | treatment | 0 | 1.68e-01 | 2.94e-01 | 5.59e-05 | 4.63e-01 | 1.15E-08 |
| Samarium-151 (isotope) | landfill | 4.25e+01 | 0 | 0 | 0 | 4.25e+01 | 0.0001% |
| Selenium-79 (isotope) | landfill | 3.31e-02 | 0 | 0 | 0 | 3.31e-02 | 8.25E-10 |
| Silver-110M (isotope) | air | 0 | 3.59e-06 | 6.29e-06 | 1.19e-09 | 9.88e-06 | 2.46E-13 |
| Silver-110M (isotope) | surface water | 9.21e-02 | 0 | 0 | 0 | 9.21e-02 | 2.29E-09 |
| Silver-110M (isotope) | treatment | 0 | 1.96e+00 | 3.43e+00 | 6.52e-04 | 5.40e+00 | 1.35E-07 |
| Sodium-24 (isotope) | treatment | 0 | 2.99e-01 | 5.23e-01 | 9.93e-05 | 8.22e-01 | 2.05E-08 |
| Strontium-89 (isotope) | treatment | 0 | 3.23e-01 | 5.65e-01 | 1.07e-04 | 8.88e-01 | 2.21E-08 |
| Strontium-90 (isotope) | landfill | 6.86e+03 | 0 | 0 | 0 | 6.86e+03 | 0.0171% |
| Strontium-90 (isotope) | treatment | 0 | 7.59e-02 | 1.33e-01 | 2.52e-05 | 2.09e-01 | 5.21E-09 |
| Strontium-95 (isotope) | treatment | 0 | 8.36e-01 | 1.47e+00 | 2.78e-04 | 2.30e+00 | 5.74E-08 |
| Sulfur-136 (isotope) | treatment | 0 | 1.80e-01 | 3.15e-01 | 5.99e-05 | 4.96e-01 | 1.24E-08 |
| Technetium-99M (isotope) | air | 0 | 1.61e-05 | 2.83e-05 | 5.36e-09 | 4.44e-05 | 1.11E-12 |
| Technetium-99M (isotope) | landfill | 1.40e+00 | 0 | 0 | 0 | 1.40e+00 | 3.50E-08 |
| Technetium-99M (isotope) | treatment | 0 | 1.17e-01 | 2.05e-01 | 3.89e-05 | 3.22e-01 | 8.03E-09 |
| Thorium-228 (isotope) | air | 3.57e-02 | 0 | 0 | 0 | 3.57e-02 | 8.89E-10 |
| Thorium-228 (isotope) | surface water | 1.19e+00 | 0 | 0 | 0 | 1.19e+00 | 2.96E-08 |
| Thorium-230 (isotope) | air | 7.31e-02 | 0 | 0 | 0 | 7.31e-02 | 1.82E-09 |
| Thorium-230 (isotope) | landfill | 2.44e+02 | 0 | 0 | 0 | 2.44e+02 | 0.0006% |

## Table J-18. LCD radioactivity outputs (Bq/functional unit)

| Material | Disposition | Upstream | Mfg | Use | EOL | Total | % or Fraction of Total |
|---|---|---|---|---|---|---|---|
| Thorium-230 (isotope) | surface water | 8.76e+00 | 0 | 0 | 0 | 8.76e+00 | 2.18E-07 |
| Thorium-232 (isotope) | air | 2.28e-02 | 0 | 0 | 0 | 2.28e-02 | 5.68E-10 |
| Thorium-234 (isotope) | air | 5.06e-03 | 0 | 0 | 0 | 5.06e-03 | 1.26E-10 |
| Thorium-234 (isotope) | surface water | 9.36e-02 | 0 | 0 | 0 | 9.36e-02 | 2.33E-09 |
| Tin-113 (isotope) | treatment | 0 | 1.85e-01 | 3.25e-01 | 6.16e-05 | 5.10e-01 | 1.27E-08 |
| Tin-126 (isotope) | landfill | 5.79e-02 | 0 | 0 | 0 | 5.79e-02 | 1.44E-09 |
| Tritium-3 (isotope) | air | 1.09e+02 | 7.98e+03 | 1.40e+04 | 2.65e+00 | 2.21e+04 | 0.0550% |
| Tritium-3 (isotope) | surface water | 1.12e+03 | 0 | 0 | 0 | 1.12e+03 | 0.0028% |
| Tritium-3 (isotope) | treatment | 0 | 5.96e+04 | 1.04e+05 | 1.98e+01 | 1.64e+05 | 0.4091% |
| Uranium-234 (isotope) | air | 1.28e-01 | 0 | 0 | 0 | 1.28e-01 | 3.19E-09 |
| Uranium-234 (isotope) | landfill | 1.51e+02 | 0 | 0 | 0 | 1.51e+02 | 0.0004% |
| Uranium-234 (isotope) | surface water | 3.09e+00 | 0 | 0 | 0 | 3.09e+00 | 7.71E-08 |
| Uranium-235 (isotope) | air | 9.55e-04 | 0 | 0 | 0 | 9.55e-04 | 2.38E-11 |
| Uranium-235 (isotope) | landfill | 2.73e+00 | 0 | 0 | 0 | 2.73e+00 | 6.81E-08 |
| Uranium-235 (isotope) | surface water | 1.34e-01 | 0 | 0 | 0 | 1.34e-01 | 3.35E-09 |
| Uranium-238 (isotope) | air | 2.10e-01 | 0 | 0 | 0 | 2.10e-01 | 5.23E-09 |
| Uranium-238 (isotope) | landfill | 4.23e+01 | 0 | 0 | 0 | 4.23e+01 | 0.0001% |
| Uranium-238 (isotope) | surface water | 2.90e+00 | 0 | 0 | 0 | 2.90e+00 | 7.23E-08 |
| Xenon-131M (isotope) | air | 0 | 4.60e+02 | 8.06e+02 | 1.53e-01 | 1.27e+03 | 0.0032% |
| Xenon-131M (isotope) | treatment | 0 | 6.14e+01 | 1.07e+02 | 2.04e-02 | 1.69e+02 | 0.0004% |
| Xenon-133 (isotope) | air | 7.63e+02 | 4.98e+03 | 1.16e+05 | 2.21e+01 | 1.22e+05 | 0.3045% |
| Xenon-133 (isotope) | treatment | 0 | 9.43e+03 | 1.65e+04 | 3.13e+00 | 2.60e+04 | 0.0647% |
| Xenon-133M (isotope) | air | 0 | 6.59e+04 | 7.73e+03 | 1.47e+00 | 7.36e+04 | 0.1835% |
| Xenon-133M (isotope) | treatment | 0 | 7.72e+01 | 1.35e+02 | 2.57e-02 | 2.13e+02 | 0.0005% |
| Xenon-135 (isotope) | air | 0 | 2.51e+03 | 4.39e+03 | 8.33e-01 | 6.90e+03 | 0.0172% |
| Xenon-135 (isotope) | treatment | 0 | 7.03e+01 | 1.23e+02 | 2.34e-02 | 1.93e+02 | 0.0005% |
| Xenon-135M (isotope) | air | 0 | 4.79e+01 | 8.39e+01 | 1.59e-02 | 1.32e+02 | 0.0003% |
| Xenon-138 (isotope) | air | 0 | 1.59e+02 | 2.78e+02 | 5.28e-02 | 4.37e+02 | 0.0011% |
| Zinc-85 (isotope) | treatment | 0 | 9.00e-02 | 1.58e-01 | 2.99e-05 | 2.48e-01 | 6.18E-09 |
| Zirconium-93 (isotope) | landfill | 1.84e-01 | 0 | 0 | 0 | 1.84e-01 | 4.60E-09 |
| Zirconium-95 (isotope) | air | 0 | 3.11e-04 | 5.44e-04 | 1.03e-07 | 8.55e-04 | 2.13E-11 |
| **Total radioactivity outputs** | | 1.20e+07 | 1.02e+07 | 1.79e+07 | 3.40e+03 | 4.01e+07 | 100% |

this page intentionally left blank

# APPENDIX K

## LCIA SUPPORTING TABLES

this page intentionally left blank

# APPENDIX K

## LCIA SUPPORTING TABLES

### Table K-1. Fuel conversion factors

| Fuel | Heat Value (H) (MJ/L) | Reference | Density (D) (kg/L) | Reference |
|---|---|---|---|---|
| Fuel oil # 2 (distillate) | 36.739 | (1) | 0.843 | (2) |
| Fuel oil # 6 (residual) | 38.579 | (1) | 0.944 | (2) |
| Fuel oil # 4 (average # 2 & # 6) | 37.659 | (1) | 0.894 | (2) |
| Liquified natural gas (LNG) [a] | 21.185 | (3) | 0.412 | (4) |
| Liquified petroleum gas (LPG) | 23.276 | (1) | 0.542 | (2) |
| Natural gas | 0.034 | (5) | $7.58 \times 10^{-4}$ | (6) |

[a] At -260 ° F; 1 $ft^3$ of liquid methane = 630 $ft^3$ of gaseous methane.

References:

1. Davis, S.C. 1999. *Transportation Energy Data Book, Edition 19.* 1999. Center for Transportation Analysis, Oak Ridge National Laboratory, ORNL 6958, Appendix B, Table B1. Oak Ridge, Tennessee. September.
2. Energy Information Administration (EIA) 1999. International Energy Annual 1997. U.S. Department of Energy. DOE/EIA-0219 (97), Washington, DC. April.
3. Natural Gas Vehicle Quick Reference Fuel Guide. http:\naturalfuels.com\quick_ref_fuel_guide.htm. Downloaded 8/25/00.
4. Perry, R.H. and Green, D. (Eds.) 1984. Perry's Chemical Engineer's Handbook, 6th Edition, page 9-14. McGraw Hill, Inc., New York, NY.
5. Based on: Wang, M. 1999. The Greenhouse Gases, Regulated Emissions, and energy Use in Transportation (GREET) Model, Version 1.5. Argonne National Laboratory, University of Chicago.
6. Calculated from: Perry, R.H. and D. Green (Eds.) 1984. Perry's Chemical Engineer's Handbook, 6th Edition, page 9-15, Table 9-13, and p. 9-16, Table 9-14. McGraw-Hill, Inc., New York, NY.

## Table K-2. Global warming potentials (GWP)

| Chemical | Synonym | CAS # | GWP [a] |
|---|---|---|---|
| carbon dioxide | $CO_2$ | 124-38-9 | 1 |
| trifluoromethane | HFC-23 | 75-46-7 | 11,700 |
| difluoromethane | HFC-32 | 75-10-5 | 650 |
| methyl fluoride | HFC-41 | 593-53-3 | 150 |
| 1,1,1,2,2,3,4,5,5,5-decafluoropentane | HFC-43-10mee20.8 | 138495-42-8 | 1300 |
| pentafluoroethane | HFC-125 | 354-33-6 | 2800 |
| 1,1,2,2-tetrafluoro-1,2-diiodoethane | HFC-134 | 359-35-3 | 1000 |
| 1,1,1,2-tetrafluoroethane | HFC-134a | 811-97-2 | 1300 |
| 1,1-difluoroethane | HFC-152a | 75-37-6 | 140 |
| 1,1,2-trifluoroethane | HFC-143 | 430-66-0 | 300 |
| 1,1,1-trifluoroethane | HFC-143a | 420-46-2 | 3800 |
| 1,1,1,2,3,3,3-heptafluoropropane | HFC-227ea | 431-89-0 | 2900 |
| 1,1,1,3,3,3-hexafluoropropane | HFC-236fa | 690-39-1 | 6300 |
| 1,1,2,2,3-pentafluoropropane | HFC-245ca | 679-86-7 | 560 |
| sulfur hexafluoride | sulfur hexafluoride | 2551-62-4 | 23,900 |
| carbon tetrafluoride | perfluoromethane | 75-73-0 | 6500 |
| hexafluoroethane/Freon 116 | perfluoroethane | 76-16-4 | 9200 |
| octafluoropropane | perfluoropropane | 76-19-7 | 7000 |
| decafluorobutane | perfluorobutane | 355-25-9 | 7000 |
| cyclooctafluorobutane | perfluorocyclobutane | 115-25-3 | 8700 |
| dodecafluoro-pentane | perfluoropentane | 678-26-2 | 7500 |
| tetradecafluorohexane | perfluorohexane | 355-42-0 | 7400 |
| methane | methane | 74-82-8 | 21 |
| nitrous oxide | nitrous oxide | 10024-97-2 | 310 |

[a] IPCC's 1995 GWP estimates, 100-year time horizon. Because of the difficulties in calculating indirect effects of CFCs and halons, no indirect values were included.
Source: Houghton *et al.* 1996.

## Table K-3. Ozone depletion potentials (ODP)

| Chemical | Synonym(s) | CAS # | Ozone Depletion Potential [e] | |
|---|---|---|---|---|
| | | | ODP [a] | ODP [b] |
| 1,1,1-trichloroethane [c] | methyl chloroform | 71-55-56 | 0.12 | 0.1 |
| 1,2,2-trichloroethane [c] | methyl chloroform | 79-00-5 | -- | -- |
| CFC-11 [c] | trichlorofluoromethane | 75-69-4 | 1 | 1.0 |
| CFC-113 [c] | trichlorotrifluoroethane | 76-13-1 | 1.07 | 0.8 |
| CFC-114 [c] | dichlorotetrafluoroethane | 76-14-2 | 0.8 | 1.0 |
| CFC-115 [c] | (mono)chloropentafluoroethane | 76-15-3 | 0.5 | 0.6 |
| CFC-12 [c] | dichlorodifluoromethane | 75-71-8 | 1 | 1.0 |
| CFC-13 [c] | chlorotrifluoromethane | 75-72-9 | 1 | 1.0 |
| CFC-111 [c] | pentachlorofluoroethane | 354-56-3 | -- | 1.0 |
| CFC-112 [c] | tetrachlorodifluoroethane | 76-12-0 | -- | 1.0 |
| CFC-211 [c] | heptachlorofluoropropane | N/A | -- | 1.0 |
| CFC-212 [c] | hexachlorodifluoropropane | 76564-99-3 | -- | 1.0 |
| CFC-213 [c] | pentachlorotrifluoropropane | 2354-06-5 | -- | 1.0 |
| CFC-214 [c] | tetrachlorotetrafluoropropane | 2268-46-4 | -- | 1.0 |
| CFC-215 [c] | trichloropentafluoropropane | 4259-43-2 | -- | 1.0 |
| CFC-216 [c] | dichlorohexafluoropropane | 661-97-2 | -- | 1.0 |
| CFC-217 [c] | monochloroheptafluoropropane | 422-86-6 | -- | 1.0 |
| CHF2Br | HBFC-22B1; bromodifluoromethane | 1511-62-2 | 0.74 | -- |
| carbon tetrachloride [c] | tetrachloromethane | 56-23-5 | 1.08 | 1.1 |
| HALON-1201 | -- | -- | 1.4 | -- |
| HALON-1202 | difluorodibromomethane | 75-61-6 | 1.25 | -- |
| HALON-1211 [c] | bromochlorodifluoromethane | 353-59-3 | 4 | 3.0 |
| HALON-1301 [c] | bromotrifluoromethane | 75-63-8 | 16 | 10.0 |
| HALON-2311 | -- | -- | 0.14 | -- |
| HALON-2401 | -- | -- | 0.25 | -- |
| HALON-2402 [c] | dibromotetrafluoroethane | 124-73-2 | 7 | 6.0 |
| HCFC-123 [d] | 2,2-dichloro-1,1,1-trifluoroethane | 306-83-2 | 0.02 | 0.02 |
| HCFC-124 [d] | 2-chloro-1,1,1,2-tetrafluorethane | 2837-89-0 | 0.022 | 0.02 |
| HCFC-141b [d] | 1,1-dichloro-1-fluoroethane | 1717-00-6 | 0.11 | 0.1 |
| HCFC-142b [d] | 1-chloro-1,1-difluoroethane | 75-68-3 | 0.065 | 0.06 |
| HCFC-22 [d] | chlorodifluoromethane | 75-45-6 | 0.055 | 0.05 |
| HCFC-225ca [d] | 3,3-dichloro-1,1,1,2,2-pentafluoropropane | 442-56-0 | 0.025 | -- |
| HCFC-225cb [d] | 1,3-dichloro-1,1,2,2,3-pentafluoropropane | 507-55-1 | 0.033 | -- |
| bromomethane [c] | methyl bromide | 74-83-9 | 0.6 | 0.7 |

[a] Source: Heijungs *et al.* 1992.
[b] Listed in Title VI of the 1990 Clean Air Act Amendments (CAAA).
[c] Class I substance as listed in Title VI of the 1990 CAAA..
[d] Class II substance as listed in Title VI of the 1990 CAAA. (Additional Class III substances listed in the CAAA but not listed here currently have no ODP data.)
[e] Weight ratios, compared to CFC-11 = 1.
"–" represents no data.

## Table K-4. Photochemical oxidant creation potentials (POCP)

| Chemical/Material | Synonym(s) | CAS # | POCP [a] |
|---|---|---|---|
| 1,1,1-trichloroethane | methyl chloroform | 71-55-6 | 0.021 |
| 1,2-dichloroethane | ethylene dichloride | 107-06-2 | 0.021 |
| acetone | -- | 67-64-1 | 0.178 |
| acetylene | -- | 74-86-2 | 0.168 |
| alcohols [b] | -- | N/A | 0.196 |
| aldehydes [b] | -- | N/A | 0.443 |
| benzene | -- | 71-43-2 | 0.189 |
| caprolactam | aminocaproic lactum | 105-60-2 | 0.761 |
| chlorophenols [b] | -- | 20-05-3 | 0.761 |
| crude oil [b] | -- | 8002-05-9 | 0.398 |
| CxHy [b] | hydrocarbons | N/A | 0.398 |
| CxHy aliphatic [b] | aliphatic hydrocarbons | N/A | 0.398 |
| CxHy aromatic [b] | aromatic hydrocarbons | N/A | 0.761 |
| CxHy chloro [b] | chlorinated hydrocarbons | N/A | 0.021 |
| dichloromethane | methylene chloride | 75-09-2 | 0.021 |
| diethyl ether | ethyl ether | 66-29-7 | 0.398 |
| diphenyl | biphenyl | 92-52-4 | 0.761 |
| ethanol | ethyl alcohol | 64-17-5 | 0.268 |
| ethene | ethylene | 74-85-1 | 1 |
| ethylene glycol | -- | 107-21-1 | 0.196 |
| ethylene oxide | -- | 75-21-8 | 0.377 |
| formaldehyde | -- | 50-00-0 | 0.421 |
| hexachlorobiphenyl | 2,2',4,4',5'5'-hexachloro-1,1-biphenyl | 35065-27-1 | 0.761 |
| hydroxy compounds [b] | -- | N/A | 0.377 |
| isopropanol | isopropyl alcohol; 2-propanol | 67-63-0 | 0.196 |
| ketones [b] | -- | N/A | 0.326 |
| methane | -- | 74-82-8 | 0.007 |
| methyl ethyl ketone | MEK | 78-93-3 | 0.473 |
| methyl mercaptan | -- | 74-93-1 | 0.377 |
| naphthalene | -- | 91-20-3 | 0.761 |
| non methane VOC [b] | -- | N/A | 0.416 |
| PAH [b] | PAC; polycyclic aromatic hydrocarbons | N/A | 0.761 |
| pentane | -- | 109-66-0 | 0.408 |
| petrol [b] | gasoline | N/A | 0.398 |
| phenol | -- | 108-95-2 | 0.761 |
| phthalic acid anhydride | phthalic anhydride | 85-44-9 | 0.761 |
| propane | -- | 74-98-6 | 0.42 |
| propene | propylene | 115-07-1 | 1.03 |
| propionaldehyde | propanal | 123-38-6 | 0.603 |

**Table K-4. Photochemical oxidant creation potentials (POCP)**

| Chemical/Material | Synonym(s) | CAS # | POCP [a] |
|---|---|---|---|
| styrene | vinyl benzene | 100-42-5 | 0.761 |
| terpentine [b] | -- | N/A | 0.377 |
| tetrachloromethane | carbon tetrachloride | 56-23-5 | 0.021 |
| toluene | -- | 108-88-3 | 0.563 |
| trichloroethene | trichloroethylene | 79-01-6 | 0.066 |
| vinyl acetate | -- | 108-05-4 | 0.223 |
| vinyl chloride | -- | 75-01-4 | 0.021 |

Source: Heijungs *et al.* 1992.
"–" represents no data.

## Table K-5. Acidification potentials (AP)

| Chemical | Synonym(s) | CAS # | AP [a] |
|---|---|---|---|
| ammonia | $NH_3$ | 7664-41-7 | 1.88 [b] |
| hydrochloric acid | HCl | 7647-01-0 | 0.88 [b] |
| hydrofluoric acid | hydrogen fluoride, HF | 7664-39-3 | 1.6 [b] |
| nitric oxide | NO | 10102-43-9 | 1.07 [b] |
| nitrogen dioxide | $NO_2$ | 10102-44-0 | 0.7 [b] |
| nitrogen oxides | $NO_X$ | N/A | 0.7 [b] |
| sulfur dioxide | $SO_2$ | 7446-09-5 | 1 [b] |
| sulfur oxides | $SO_X$ | N/A | 1 [b] |
| sulfur trioxide | $SO_3$ | 7446-11-9 | 0.80 [c] |
| nitric acid | $HNO_3$ | 7697-37-2 | 0.51 [c] |
| sulfuric acid | $H_2SO_4$ | 7664-93-9 | 0.65 [c] |
| phosphoric acid | $H_3O_4P$ | 7664-38-2 | 0.98 [c] |
| hydrogen sulfide | $H_2S$ | 7783-06-4 | 1.88 [c] |

[a] Ratios per equal weights, compared to $SO_2$, $SO_X$ = 1 for emissions to air.
[b] Source: Heijungs *et al.* 1992.
[c] Source: Hauschild and Wenzel 1997.

## Table K-6. Eutrophication potential nutrient enrichment chemicals

| Chemical/Parameter (releases to water) | Synonym | CAS # | EP [a] |
|---|---|---|---|
| COD | chemical oxygen demand | N/A | 0.022 [b] |
| ammonia | $NH_3$ | 7664-41-7 | 0.33 [b] |
| ammonium ion | $NH_4^+$ | N/A | 0.33 [b] |
| total nitrogen | N | N/A | 0.42 [b] |
| phosphate | $PO_4^{-3}$ | N/A | 1.0 [b] |
| total phosphorus | P | N/A | 3.06 [b] |
| nitrate | $NO_3^-$ | NA | 0.10 [c] |

[a] Ratios per equal weights, compared to phosphate = 1.
[b] Source: Heijungs *et al.* 1992.
[c] Source: Lindfors *et al.* 1995.
NOTE: Eutrophication potentials for releases to air are available but not used in this methodology because partitioning between air and water phases is not considered in this methodology.

## Table K-7. Odor threshold values (OTV)

| Chemical | Synonym(s) | CAS # | OTV ($mg/m^3$) |
|---|---|---|---|
| acetaldehyde | ethanal | 75-07-0 | 0.00027 [a] |
| acetic acid | succinate | 64-19-7 | 0.061 [a] |
| acetonitrile | methyl cyanide | 75-05-8 | <67 [b] |
| acetophenone | acetylbenzene | 98-86-2 | 1.5 [b] |
| acrolein | 2-propenal | 107-02-8 | 0.069 [a] |
| acrylic acid | propenoic acid | 79-10-7 | 0.27 [b] |
| acrylontirile | vinyl cyanide | 107-13-1 | 3.4 [b] |
| ammonia | $NH_3$ | 7664-41-7 | 1.0 [a] |
| aniline | -- | 62-53-3 | 38 [b] |
| benzene | -- | 71-43-2 | 108 [b] |
| benzyl chloride | alpha-chlorotoluene | 100-44-7 | 0.21 [b] |
| 1,3-butadiene | butadiene | 106-99-0 | 1 [b] |
| butanal | butyraldehyde | 123-72-8 | 0.00084 [a] |
| butanoic acid | butyric acid | 107-92-6 | 0.00035 [a] |
| 1-butanol | butyl alcohol, – | 71-36-3 | 0.077 [a] |
| 2-butanone | methyl ethyl ketone | 78-93-3 | 0.68 [a] |
| n-butylacetate | -- | 123-86-4 | 0.031 [a] |
| butylacrylate | -- | 141-32-2 | 0.0015 [a] |
| n-butylpropionate | -- | 590-01-2 | 0.086 [a] |
| carbon disulfide | $CS_2$ | 75-15-0 | 0.18 [a] |
| carbon tetrachloride | tetrachloromethane | 56-23-5 | 884 [b] |
| carbonyl sulfide | carbon oxysulfide | 463-58-1 | 0.25 [b] |
| chlorine | -- | 7782-50-5 | 0.23 [b] |
| 2-chloroacetophenone | phenyl chloromethyl ketone | 532-27-4 | 0.1 - 0.7 [b] |
| chlorobenzene | -- | 108-90-7 | 1.0 [a] |
| chloroform | trichloromethane | 67-66-3 | 650 [b] |
| m-cresol | 3-methylphenol | 108-93-4 | 0.00022 - 0.035 [b] |
| cumene | isopropylbenzene | 98-82-8 | 0.04 [b] |
| decaline | veraline (-)form | 14727-56-1 | 2.8 [a] |
| P-dichlorobenzene | 1,4-dichlorobenzene | 106-46-7 | 0.73 [b] |
| dichloromethane | methylene chloride | 75-09-2 | 640 [a] |
| diethylamine | -- | 109-89-7 | 0.09 [a] |
| dimethylamine | -- | 124-40-3 | 0.0014 [a] |
| 1,2-dimethylbenzene | o-xylene | 95-47-6 | 0.78 [a] |
| 1,3-dimethylbenzene | m-xylene | 108-38-3 | 0.54 [a] |
| 1,4-dimethylbenzene | p-xylene | 106-42-3 | 0.52 [a] |
| 1,1-dimethylhydrazine | N,N-dimethylhydrazine | 57-14-7 | 15 - 65 [b] |
| dioxane | 1,4-diethylene dioxide; 1,4-dioxane | 123-91-1 | 2.9 [b] |

## Table K-7. Odor threshold values (OTV)

| Chemical | Synonym(s) | CAS # | OTV (mg/m$^3$) |
|---|---|---|---|
| ethanal | acetaldehyde | 75-07-0 | 0.00027 [a] |
| ethanethiol | ethylmercaptan | 75-08-1 | 0.000044 [a] |
| ethanol | ethyl alcohol | 64-17-5 | 0.64 [a] |
| ethyl acetate | -- | 141-78-6 | 2.1 [a] |
| ethyl acrylate | -- | 140-88-5 | 0.00082 [a] |
| 2-ethyl-5,5-dimethyl-1,3-dioxane | -- | -- | 0.0000056 [a] |
| ethyl butyrate | -- | 105-54-4 | 0.00003 [a] |
| ethylene dichloride | 1,2-dichloroethane | 107-06-2 | 25 [b] |
| ethylene oxide | oxirane | 75-21-8 | 470 [b] |
| ethylthioethane | diethylsulfide | 352-93-2 | 0.0014 [a] |
| hydrazine | -- | 302-01-2 | 3.9 - 5.2 [b] |
| hydrogen sulfide | $H_2S$ | 7783-06-4 | 0.00043 [a] |
| isopentylacetate | iso-amylacetate | 123-92-2 | 0.075 [a] |
| isophorone | 3,5,5-trimethyl-2-cyclohexenone | 78-59-1 | 1.1 [b] |
| isopropylbenzene | cumene | 98-82-8 | 0.073 [a] |
| isopropylpropionate | -- | 637-78-5 | 0.32 [a] |
| methanal | formaldehyde | 50-00-0 | 0.49 [a] |
| methanethiol | methyl mercaptan | 74-93-1 | 0.00024 [a] |
| methanol | methyl alcohol | 67-56-1 | 5.5 [b] |
| methyl acetate | acetic acid | 79-20-9 | 22 [a] |
| methylamine | -- | 74-89-5 | 0.0012 [a] |
| 3-methylbutanoic acid | isovaleric acid | 503-74-2 | 0.00022 [a] |
| methyldithiomethane | dimethyldisulfide | 624-92-0 | 0.0015 [a] |
| methyl hydrazine | -- | 60-34-4 | 1.9 - 5.7 [b] |
| methyl methacrylate | 2-propenoic acid | 80-62-6 | 0.2 [b] |
| 4-methylpentanon-2 | methylisobutylketone, MIBK | 108-10-1 | 0.4 [b] |
| *o*-cresol | 2-methylphenol | 95-48-7 | 0.0018 [a] |
| *m*-cresol | 3-methylphenol | 108-37-4 | 0.00057 [a] |
| *p*-cresol | 4-methylphenol | 106-44-5 | 0.00018 [a] |
| 2-methylpropanoic acid | isobutyric acid | 79-31-2 | 0.005 [a] |
| 2-methylpropanol-1 | isobutanol | 78-73-1 | 0.035 [a] |
| 2-methylpropene | isobutene | 115-11-7 | 15 [a] |
| methyl acrylate | 2-propenoic acid, methyl | 96-33-3 | 0.01 [a] |
| methyl propionate | -- | 554-12-1 | 3.5 [a] |
| methylthiomethane | dimethylsulfide | 75-18-3 | 0.0003 [a] |
| naphthalene | -- | 91-20-3 | 0.2 [b] |
| nitrobenzene | -- | 98-95-3 | 906 [b] |
| pentanal | valeraldehyde | 110-62-3 | 0.0024 [a] |

## Table K-7. Odor threshold values (OTV)

| Chemical | Synonym(s) | CAS # | OTV (mg/m$^3$) |
|---|---|---|---|
| phenol | -- | 108-95-2 | 0.039 [a] |
| phosphine | -- | 7803-51-2 | 0.014 - 2.8 [b] |
| propanal | propionaldehyde | 123-38-6 | 0.0035 [a] |
| propanoic acid | propionic acid | 79-09-4 | 0.0052 [a] |
| 2-propanon | acetone | 67-64-1 | 72 [a] |
| 2-propenal | acrolein | 107-02-8 | 0.069 [a] |
| propionaldehyde | 2-propynal | 123-38-6 | 0.003 [a] |
| propylene dichloride | 1,2-dichloropropane | 78-87-5 | 1.2 [b] |
| propylene oxide | methyloxidrane | 75-56-9 | 24 [b] |
| pyridine | -- | 110-86-1 | 0.12 [a] |
| quinoline | -- | 91-22-5 | 28 [b] |
| styrene | vinylbenzene | 100-42-5 | 0.068 [a] |
| styrene oxide | 1-phenyl-1,2-epoxyethane | 96-09-3 | 0.3 [b] |
| tetrachloroethene | perchloroethene; tetrachloroethylene | 127-18-4 | 8.3 [a] |
| 1,1,2,2-tetrachloroethane | acetylene tetrachloride | 79-34-5 | 50 [b] |
| terephthaloyldichloride | terephthalic acid dichloride | 100-20-9 | 0.0032 [a] |
| toluene | methylbenzene | 108-88-3 | 0.6 [b] |
| trichloroethene | trichloroethylene | 79-01-6 | 3.9 [a] |
| 1,1,1-trichloroethane | methyl chloroform | 71-55-6 | 5.3 [a] |
| 2,4,6-trichlorophenol | -- | 88-06-2 | 0.00016 [b] |
| triethylamine | -- | 121-44-8 | 1.1 [b] |
| trimethylamine | -- | 75-50-3 | 0.00026 [a] |
| 1,2,4-trimethylbenzene | pseudocumene | 95-63-6 | 0.14 [a] |
| 1,3,5-trimethylbenzene | mesitylene | 108-67-8 | 0.18 [a] |
| vinyl acetate | -- | 108-05-4 | 0.4 [b] |
| glycol ethers | -- | N/A | 0.3 [b] |
| 3-methylindole | skatole | 83-34-1 | 0.1 [b] |
| polycyclic organic matter | -- | N/A | 0.074 [b] |

[a] Source: Roos C. 1989 (as cited in Hiejungs *et al.* 1992).
[b] EPA 1992. *Reference Guide to Odor Thresholds for Hazardous Air Pollutants Listed in the Clean Air Act Amendments of 1990.* Washington, DC. EPA/600/R/92/047.
NOTE: When values were available from both sources, the lower value was used.
"–" represents no data.

## Table K-8. Chemicals in the CDP inventory classified as potentially toxic

| Cas # | Material | Chronic | | | | | | | Aquatic ecotoxicity | |
|---|---|---|---|---|---|---|---|---|---|---|
| | | oral SF (mg/kg-day)$^{-1}$ | inhal SF (mg/kg-day)$^{-1}$ | WOE (EPA & IARC)(a) | oral NOAEL (b) (mg/kg-day) | inhal NOAEL (b) (mg/m$^3$) | oral LOAEL (b,c) (mg/kg-day) | inhal LOAEL (b,c) (mg/m$^3$) | fish LC50 (mg/L) | fish NOAEL (mg/L) |
| 71-55-6 | 1,1,1-trichloroethane | -- | -- | -- | 2.50e+02 | 1.21e+03 | X | X | 48.0 | 7.0 |
| 76-14-2 | 1,2-dichlorotetrafluoroethane (CFC 114) | -- | -- | -- | 2.73e+02 | X | X | X | XX | XX |
| 106-99-0 | 1,3-butadiene | X | 1.8 | B2,2B | X | 2.80e+03 | X | X | 4.0 | 1.0 |
| 96-48-0 | 1,4-butanolide | X | X | 3 | X | X | 100 | X | XX | XX |
| 107-98-2 | 1-Methoxy-2-propanol | -- | -- | -- | X | 658 | X | X | XX | XX |
| 872-50-4 | 1-Methyl-2-pyrrolidinone (NMP) | -- | -- | -- | X | X | X | 40 | XX | XX |
| 112-34-5 | 2-(2-butoxyethoxy)ethanol (glycol ether) | -- | -- | -- | X | X | 24 | X | XX | XX |
| 124-17-4 | 2-(2-butoxyethoxy)ethyl acetate | -- | -- | -- | 1000 | X | X | X | XX | XX |
| 540-84-1 | 2,2,4-trimethylpentane (Isooctane) | -- | -- | -- | -- | -- | -- | -- | XX | XX |
| 51207-31-9 | 2,3,7,8-Tetrachlorodibenzo Furan | 1.50e+04 | 1.50e+04 | 3 | -- | -- | -- | -- | XX | XX |
| 1746-01-6 | 2,3,7,8-Tetrachlorodibenzo-p-Dioxin | 1.50e+05 | 1.50e+05 | 1 | 9.00e-08 | X | X | X | XX | XX |
| 121-14-2 | 2,4-Dinitrotoluene | 0.68 | X | B2 | 0.2 | X | X | X | 24.0 | 6.0 |
| 532-27-4 | 2-Chloroacetophenone | -- | -- | -- | X | X | X | 1.0 | XX | XX |
| 111-15-9 | 2-ethoxyl ethylacetate | -- | -- | -- | -- | -- | -- | -- | XX | XX |
| 91-57-6 | 2-Methylnaphthalene | -- | -- | -- | -- | -- | -- | -- | XX | XX |
| 138526-69-9 | 3,4,5-trifluorobromobenzene | -- | -- | -- | -- | -- | -- | -- | XX | XX |
| 348-61-8 | 3,4-difluorobromobenzene | -- | -- | -- | -- | -- | -- | -- | XX | XX |
| 56-49-5 | 3-Methylcholanthrene | -- | -- | -- | X | X | 2.86 | X | XX | XX |
| 82832-73-3 (d) | 4-(4-propylcyclohexyl)cyclohexanone | -- | -- | -- | -- | -- | -- | -- | XX | XX |
| 106-41-2 | 4-bromophenol | -- | -- | -- | -- | -- | -- | -- | XX | XX |
| 123-07-9 | 4-ethylphenol | -- | -- | -- | -- | -- | -- | -- | XX | XX |
| 14938-35-3 | 4-pentylphenol | -- | -- | -- | -- | -- | -- | -- | XX | XX |
| 70-70-2 | 4-propionylphenol | -- | -- | -- | -- | -- | -- | -- | XX | XX |
| 3697-24-3 | 5-Methyl chrysene (category: PAH) | X | X | 2B | -- | -- | -- | -- | XX | XX |
| 83-32-9 | Acenaphthene (category: PAH) | -- | -- | -- | 175 | X | 350 | X | XX | XX |
| 208-96-8 | Acenaphthylene (category: PAH) | X | X | D | -- | -- | -- | -- | XX | XX |
| 75-07-0 | Acetaldehyde | Y | 7.70e-03 | 2B | 125 | 300 | X | X | 34.0 | 9.0 |
| 64-19-7 | Acetic acid | -- | -- | -- | 195 | X | X | X | XX | XX |

## Table K-8. Chemicals in the CDP inventory classified as potentially toxic

| Cas # | Material | Chronic | | | | | | | Aquatic ecotoxicity | |
|---|---|---|---|---|---|---|---|---|---|---|
| | | oral SF (mg/kg-day)$^{-1}$ | inhal SF (mg/kg-day)$^{-1}$ | WOE (EPA & IARC)(a) | oral NOAEL (b) (mg/kg-day) | inhal NOAEL (b) (mg/m$^3$) | oral LOAEL (b,c) (mg/kg-day) | inhal LOAEL (b,c) (mg/m$^3$) | fish LC50 (mg/L) | fish NOAEL (mg/L) |
| 67-64-1 | Acetone | X | X | D | 100 | X | X | X | 720 | 180 |
| 98-86-2 | Acetophenone | -- | -- | -- | 423 | X | X | X | XX | XX |
| 74-86-2 | Acetylene | -- | -- | -- | -- | -- | -- | -- | XX | XX |
| 107-02-8 | Acrolein | X | X | C,3 | -- | -- | -- | -- | XX | XX |
| No CAS # | Aluminium (Al3+) | -- | -- | -- | -- | -- | -- | -- | 3.6 | 0.36 |
| 7429-90-5 | Aluminum (Al) | X | X | SAR0 | 60 | X | X | X | XX | XX |
| 1344-28-1 | Aluminum oxide | -- | -- | -- | -- | -- | -- | -- | XX | XX |
| 7664-41-7 | Ammonia | -- | -- | -- | 34 | 40 | X | X | 2.0 | 9.00e-02 |
| 1341-49-7 | Ammonium bifluoride | -- | -- | -- | 5.10e-02 | X | X | X | XX | XX |
| 7789-09-5 | Ammonium Dichromate | X | X | A1 | -- | -- | -- | -- | XX | XX |
| 12125-01-8 | Ammonium Fluoride | -- | -- | -- | -- | -- | -- | -- | XX | XX |
| 1336-21-6 | Ammonium hydroxide | -- | -- | -- | -- | -- | -- | -- | XX | XX |
| 1113-38-8 | Ammonium Oxalate | -- | -- | -- | -- | -- | -- | -- | XX | XX |
| 6009-70-7 | Ammonium Oxalate Monohydrate | -- | -- | -- | -- | -- | -- | -- | XX | XX |
| 628-63-7 | Amyl Acetate (mixed isomers) | -- | -- | -- | -- | -- | -- | -- | XX | XX |
| 120-12-7 | Anthracene (category: PAH) | X | X | SAR1 | 1000 | X | X | X | 0.01 | -- |
| 7440-36-0 | Antimony (Sb) | -- | -- | -- | X | X | 0.35 | X | 14.4 | 1.6 |
| 7440-38-2 | Arsenic (As) | 1.5 | 50 | A | 8.00e-04 | X | X | X | 14.4 | 2.1 |
| "20-01-9" | Arsenic compounds [Arsenic (As3+, As5+)] | 1.5 | X | A,1 | 8.00e-04 | X | X | X | 32.0 | 2.0 |
| 7440-39-3 | Barium (Ba) | -- | -- | -- | 0.21 | X | X | X | 580 | 50.0 |
| 513-77-9 | Barium carbonate | X | X | D | 0.21 | X | X | X | XX | XX |
| "20-02-0" | Barium compounds [Barium (Ba++)] | X | X | D | 0.21 | X | X | X | 200 | 10.0 |
| 7727-43-7 | Barium Sulfate | X | X | D | 0.21 | X | X | X | -- | -- |
| 100-52-7 | Benzaldehyde | -- | -- | -- | 143 | X | X | X | 27.0 | XX |
| 71-43-2 | Benzene | 0.055 | 0.029 | A,1 | 1.0 | 1.15 | 10 | 98 | 19.0 | 4.0 |
| 56-55-3 | Benzo(a)anthracene (category: PAH) | 0.73 | 0.31 | B2 | -- | -- | -- | -- | XX | XX |
| 50-32-8 | Benzo(a)pyrene | 7.3 | 3.1 | B2,2A | -- | -- | -- | -- | XX | XX |
| 56832-73-6 | Benzo(b,j,k)fluoranthene (category: PAH) | X | X | B2 | -- | -- | -- | -- | XX | XX |
| 191-24-2 | Benzo(g,h,i)perylene (category: PAH) | X | X | D | -- | -- | -- | -- | XX | XX |

## Table K-8. Chemicals in the CDP inventory classified as potentially toxic

| Cas # | Material | Chronic | | | | | | | Aquatic ecotoxicity | |
|---|---|---|---|---|---|---|---|---|---|---|
| | | oral SF (mg/kg-day)$^{-1}$ | inhal SF (mg/kg-day)$^{-1}$ | WOE (EPA & IARC)(a) | oral NOAEL (b) (mg/kg-day) | inhal NOAEL (b) (mg/m$^3$) | oral LOAEL (b,c) (mg/kg-day) | inhal LOAEL (b,c) (mg/m$^3$) | fish LC50 (mg/L) | fish NOAEL (mg/L) |
| 205-99-2 | Benzo[b]fluoranthene | 0.73 | 0.31 | B2 | -- | -- | -- | -- | XX | XX |
| 100-44-7 | Benzyl chloride | 0.17 | X | B2,3 | -- | -- | -- | -- | XX | XX |
| 7440-41-7 | Beryllium (Be) | 4.3 | 8.4 | X | X | X | X | 5.50e-04 | XX | XX |
| 92-52-4 | Biphenyl (category: PAH) | X | X | SAR0 | 50 | X | X | X | 2.0 | 0.12 |
| 68611-71-2 (d) | Blue phosphor (ZnS) | -- | -- | -- | -- | -- | -- | -- | XX | XX |
| 1314-98-3 | Blue phosphor (ZnS:Ag:Al) | -- | -- | -- | -- | -- | -- | -- | XX | XX |
| 1303-96-4 | borax | -- | -- | -- | -- | -- | -- | -- | XX | XX |
| 11113-50-1 | boric acid | -- | -- | -- | 67 | X | 62.5 | X | -- | -- |
| No CAS # | Boron (B III) | -- | -- | -- | 8.8 | X | X | X | 113 | 27.0 |
| 7440-42-8 | Boron (B) | -- | -- | -- | 8.8 | X | X | X | 113 | 27.0 |
| 7726-95-6 | Bromine | -- | -- | -- | -- | -- | -- | -- | XX | XX |
| 75-25-2 | Bromoform | 7.90e-03 | 3.90e-03 | B2 | 17.9 | X | X | X | XX | XX |
| 74-83-9 | Bromomethane [Methyl bromide] | X | X | C,3 | 0.4 | 4.3 | X | X | 11.0 | 3.0 |
| 7440-43-9 | Cadmium (Cd) | X | 6.1 | B1,1 | X | X | 4.00e-02 | 2.20e-02 | 0.001 | 0.001 |
| "20-04-2" | Cadmium cmpds (as CdCl2) [Cadmium (Cd++)] | X | X | B1,2A | 5.00e-03 | X | X | X | 0.1 | -- |
| 75-15-0 | Carbon disulfide | -- | -- | -- | X | 10 | X | X | 694 | 174 |
| 630-08-0 | Carbon monoxide (CO) | -- | -- | -- | X | 114.5 | X | 55 | XX | XX |
| 56-23-5 | Carbon tetrachloride | 1.30e-01 | 5.30e-02 | B2,2B | 1 | 34.3 | X | X | 41.0 | 5.0 |
| No CAS # | Cerium (Ce++) | -- | -- | -- | -- | -- | -- | -- | -- | -- |
| 1306-38-3 | Cerium oxide | -- | -- | -- | X | X | X | 5.0 | XX | XX |
| No CAS # | Cesium (Cs++) | -- | -- | -- | -- | -- | -- | -- | -- | -- |
| 75-72-9 | CFC 13 | -- | -- | -- | -- | -- | -- | -- | XX | XX |
| 7782-50-5 | Chlorine (Cl2) | -- | -- | -- | 14.0 | X | X | X | 0.34 | 0.02 |
| 1341-24-8 | Chloroacetophenone | -- | -- | -- | -- | -- | -- | -- | XX | XX |
| 108-90-7 | Chlorobenzene | X | X | SAR0 | 12.5 | 377 | X | X | 17.0 | 2.0 |
| 67-66-3 | Chloroform | 6.10e-03 | 8.10e-02 | B2,2B | X | X | 12.9 | X | 71.0 | 18.0 |
| 16065-83-1 | Chromium (Cr III) | X | X | D | 1468 | X | X | X | 3.3 | 0.33 |
| 7440-47-3 | Chromium (Cr) | X | X | 1 | -- | -- | -- | -- | 52.0 | 5.2 |
| 1333-82-0 | Chromium oxide (chromium trioxide) | X | X | D | 1468 | X | X | X | XX | XX |
| 18540-29-9 | Chromium, hexavalent | X | 41 | A,1 | 2.5 | X | X | X | 22.6 | 2.23 |

## Table K-8. Chemicals in the CDP inventory classified as potentially toxic

| Cas # | Material | Chronic | | | | | | | Aquatic ecotoxicity | |
|---|---|---|---|---|---|---|---|---|---|---|
| | | oral SF (mg/kg-day)$^{-1}$ | inhal SF (mg/kg-day)$^{-1}$ | WOE (EPA & IARC)(a) | oral NOAEL (b) (mg/kg-day) | inhal NOAEL (b) (mg/m$^3$) | oral LOAEL (b,c) (mg/kg-day) | inhal LOAEL (b,c) (mg/m$^3$) | fish LC50 (mg/L) | fish NOAEL (mg/L) |
| 218-01-9 | Chrysene (category: PAH) | 7.30e-03 | 3.10e-03 | X | -- | -- | -- | -- | XX | XX |
| No CAS # | Cobalt (Co I, Co II, Co III) | -- | -- | -- | -- | -- | -- | -- | -- | -- |
| 7440-48-4 | Cobalt (Co) | -- | -- | -- | -- | -- | -- | -- | XX | XX |
| 7440-50-8 | Copper (Cu) | X | X | D | 5.30e-01 | X | X | X | 1.40e-02 | 4.00e-03 |
| No CAS # | Copper (Cu+, Cu++) | -- | -- | -- | 5.30e-01 | X | X | X | 1.40e-02 | 4.00e-03 |
| 9065-82-1 | cresol-formaldehyde resins | -- | -- | -- | -- | -- | -- | -- | XX | XX |
| 98-82-8 | Cumene | X | X | SAR0 | 154 | 537 | X | X | 6.0 | 0.49 |
| 80-15-9 | Cumene hydroperoxide | X | X | SAR1 | X | 31 | X | X | 62.0 | 16.0 |
| 57-12-5 | Cyanide (CN) | X | X | D | 10.8 | X | X | X | 56.0 | 5.7 |
| 110-82-7 | Cyclohexane | X | X | SAR0 | X | 1500 | X | X | 5.0 | 0.39 |
| 117-81-7 | Di(2-ethylhexyl)phthalate [ Bis(2-ethylhexyl)phthalate] | X | X | B2,2B | 50 | 50 | X | X | 1.0 | 0.08 |
| 53-70-3 | Dibenzo(a,h)anthracene | 7.3 | 3.1 | B2 | -- | -- | -- | -- | XX | XX |
| 25321-22-6 | Dichlorobenzene (mixed isomers) | X | X | SAR0 | X | 610.4 | X | X | 1.0 | 0.05 |
| 75-71-8 | Dichlorodifluoromethane (CFC 12) | -- | -- | -- | 15 | X | X | X | XX | XX |
| 75-09-2 | Dichloromethane (Methylene chloride) | 7.50e-03 | 1.65e-03 | B2,2B | 155 | 796 | X | X | 330 | 83.0 |
| 68334-30-5 | Diesel fuel | X | X | C | -- | -- | -- | -- | XX | XX |
| 60-29-7 | Diethyl ether (Ethyl ether) | -- | -- | -- | 500 | X | X | X | XX | XX |
| 111-46-6 | Diethylene Glycol | -- | -- | -- | 1250 | X | X | X | XX | XX |
| 68-12-2 | Dimethyl formamide | -- | -- | -- | X | X | X | 7.9 | XX | XX |
| 77-78-1 | Dimethyl sulfate | X | X | B1,2A | -- | -- | -- | -- | XX | XX |
| 57-97-6 | Dimethylbenzanthracene | -- | -- | -- | X | X | X | 1.40e-02 | XX | XX |
| 67-68-5 | di-methyl-sulfoxide | -- | -- | -- | X | X | 1.0 | X | XX | XX |
| 122-62-3 | Dioctyl Sebacate | -- | -- | -- | 200 | X | X | X | XX | XX |
| 60-00-4 | Edetic Acid (EDTA) | -- | -- | -- | -- | -- | -- | -- | 473 | 240 |
| 74-84-0 | Ethane | -- | -- | -- | -- | -- | -- | -- | XX | XX |
| 75-08-1 | Ethanethiol [Mercaptans] | -- | -- | -- | -- | -- | -- | -- | XX | XX |
| 141-43-5 | ethanol amine | -- | -- | -- | 320 | X | X | 12.7 | XX | XX |
| 75-00-3 | Ethyl chloride | X | X | 3 | X | 3600 | X | X | 16.0 | 4.0 |
| 100-41-4 | Ethylbenzene | X | X | SAR0 | 136 | 2370 | X | X | 11.0 | 1.0 |

## Table K-8. Chemicals in the CDP inventory classified as potentially toxic

| Cas # | Material | Chronic | | | | | | | Aquatic ecotoxicity | |
|---|---|---|---|---|---|---|---|---|---|---|
| | | oral SF (mg/kg-day)$^{-1}$ | inhal SF (mg/kg-day)$^{-1}$ | WOE (EPA & IARC)(a) | oral NOAEL (b) (mg/kg-day) | inhal NOAEL (b) (mg/m$^3$) | oral LOAEL (b,c) (mg/kg-day) | inhal LOAEL (b,c) (mg/m$^3$) | fish LC50 (mg/L) | fish NOAEL (mg/L) |
| 74-85-1 | Ethylene | X | X | SAR0 | X | 11600 | X | X | 14.0 | 3.0 |
| 106-93-4 | Ethylene dibromide | 85 | 7.60e-01 | B2 | -- | -- | -- | -- | XX | XX |
| 107-06-2 | Ethylene dichloride | 9.10e-02 | 9.10e-02 | B2,2B | 18 | 221 | X | X | 136 | 34.0 |
| unknown | Etoxy Naphtol Sulphonic Acid (ENSA) | -- | -- | -- | -- | -- | -- | -- | XX | XX |
| No CAS # | Ferromanganese (Fe, Mn, C) | -- | -- | -- | -- | -- | -- | -- | XX | XX |
| 206-44-0 | Fluoranthene (category: PAH) | X | X | D | 125 | X | X | X | XX | XX |
| 86-73-7 | Fluorene (category: PAH) | X | X | D | 125 | X | X | X | XX | XX |
| 16984-48-8 | Fluoride | -- | -- | -- | -- | -- | -- | -- | -- | -- |
| No CAS # | Fluorides (F-) | -- | -- | -- | 6.00e-02 | X | X | X | -- | -- |
| 7782-41-4 | Fluorine (F2) | -- | -- | -- | 6.00e-02 | X | X | X | XX | XX |
| 9002-84-0 | Fluorocarbon resin [Tetrafluoroethylene (C2F4)] | X | X | 3 | -- | -- | -- | -- | XX | XX |
| 50-00-0 | Formaldehyde (CH2O) | X | 4.50e-02 | B1,2A | 15 | 0.6 | X | X | 24.0 | 6.0 |
| No CAS # | Fuel Oil #2 (distillate and diesel) | -- | -- | -- | -- | -- | -- | -- | XX | XX |
| No CAS # | Fuel Oil #4 (distillate and residual) | -- | -- | -- | -- | -- | -- | -- | XX | XX |
| No CAS # | Fuel Oil #6 (residual) | -- | -- | -- | -- | -- | -- | -- | XX | XX |
| 111-76-2 | glycol ethers [2-butoxy ethanol] | X | X | C,3 | 203 | 121 | X | X | 1,490 | 373 |
| unknown | Green Phosphor (ZnS.Cu.Al) | -- | -- | -- | -- | -- | -- | -- | XX | XX |
| 68611-68-7 (d) | Green phosphors (ZnS) | -- | -- | -- | -- | -- | -- | -- | XX | XX |
| 75-63-8 | Halon 1301 | -- | -- | -- | -- | -- | -- | | XX | XX |
| 75-45-6 | HCFC 22 | -- | -- | -- | X | 5,260 | X | X | XX | XX |
| 422-56-0 | HCFC-225ca | -- | -- | -- | -- | -- | -- | -- | XX | XX |
| 507-55-1 | HCFC-225cb | -- | -- | -- | -- | -- | -- | -- | XX | XX |
| 142-82-5 | Heptane (n-Heptane) | X | X | D | 1,000 | X | X | 1,630 | XX | XX |
| 67-72-1 | Hexachloroethane | 1.40e-02 | 1.40e-02 | C,3 | 1.0 | X | X | X | 1.0 | 0.35 |
| 999-97-3 | Hexamethyldisilazane (HMDS) | -- | -- | -- | -- | -- | -- | -- | XX | XX |
| 110-54-3 | Hexane | -- | -- | -- | X | X | X | 73 | 2.5 | 0.25 |
| 354-33-6 | HFC 125 | -- | -- | -- | X | 2.45e+05 | X | X | XX | XX |

## Table K-8. Chemicals in the CDP inventory classified as potentially toxic

| Cas # | Material | Chronic | | | | | | | Aquatic ecotoxicity | |
|---|---|---|---|---|---|---|---|---|---|---|
| | | oral SF (mg/kg-day)$^{-1}$ | inhal SF (mg/kg-day)$^{-1}$ | WOE (EPA & IARC)(a) | oral NOAEL (b) (mg/kg-day) | inhal NOAEL (b) (mg/m$^3$) | oral LOAEL (b,c) (mg/kg-day) | inhal LOAEL (b,c) (mg/m$^3$) | fish LC50 (mg/L) | fish NOAEL (mg/L) |
| 302-01-2 | Hydrazine | 3 | 17 | B2 | -- | -- | -- | -- | 4.83 | 0.48 |
| 7647-01-0 | hydrochloric acid | X | X | 3 | X | 15 | X | X | 19.0 | 0.95 |
| 7664-39-3 | Hydrofluoric acid (hydrogen fluoride) | -- | -- | -- | -- | -- | -- | -- | 265 | 13 |
| 74-90-8 | Hydrogen Cyanide | X | X | SAR0 | 10.8 | X | 30 | 7.07 | 1,385 | 346 |
| 7722-84-1 | Hydrogen Peroxide | X | X | 3 | -- | -- | -- | -- | XX | XX |
| 7783-06-4 | Hydrogen Sulfide | -- | -- | -- | 3.1 | X | X | 15 | XX | XX |
| 7790-92-3 | Hypochlorous Acid | -- | -- | -- | -- | -- | -- | -- | -- | -- |
| 193-39-5 | Indeno(1,2,3-cd)pyrene (category: PAH) | 7.30e-01 | 3.10e-01 | B2 | -- | -- | -- | -- | XX | XX |
| 50926-11-9 | Indium tin oxide (ITO) | -- | -- | -- | -- | -- | -- | -- | XX | XX |
| 123-92-2 | Isopentyl acetate (Amyl Acetate) | -- | -- | -- | -- | -- | -- | -- | XX | XX |
| 78-59-1 | Isophorone | 9.50e-04 | X | C | 150 | X | X | X | XX | XX |
| 67-63-0 | Isopropyl alcohol | X | X | 1 | 230 | 268.3 | X | X | 8,623 | 2,156 |
| 637-78-5 | Isopropylpropionate | -- | -- | -- | -- | -- | -- | -- | XX | XX |
| 7439-91-0 | Lanthanum (La) | -- | -- | -- | -- | -- | -- | -- | XX | XX |
| 7439-92-1 | Lead (Pb) | X | X | B2,2B | -- | -- | -- | -- | 31.5 | 0.004 |
| "20-11-1" | Lead compounds (as PbCl2) [Lead (Pb++, Pb4+)] | X | X | B2,2B | -- | -- | -- | -- | 5.0 | 0.26 |
| 1317-36-8 | Lead oxide | X | X | B2 | -- | -- | -- | -- | XX | XX |
| 7446-14-2 | Lead sulfate cake | X | X | B2 | -- | -- | -- | -- | 60.8 | 6.08 |
| NA | Liquified petroleum gas (LPG) | -- | -- | -- | -- | -- | -- | -- | 2600 | 260 |
| NA | Lithium Salts (Lithine) | -- | -- | -- | -- | -- | -- | -- | -- | -- |
| NA | LNG (Liquified natural gas) | -- | -- | -- | -- | -- | -- | -- | XX | XX |
| 7439-96-5 | Manganese | X | X | D | 0.14 | X | X | 0.15 | -- | -- |
| "21-12-2" | Manganese cmpds (as MnCl2) [Manganese (Mn II, Mn IV, Mn VII)] | X | X | D | 0.14 | X | X | 0.15 | 150.0 | 8.0 |
| 7439-97-6 | Mercury (Hg) | X | X | D,3 | X | 6.00e-03 | X | 9.00e-03 | 0.155 | 0.005 |
| no CAS# | Mercury cmpds (as HgCl2) [Mercury (Hg+, Hg++)] | X | X | C | X | X | 0.226 | X | 0.155 | 0.005 |
| 74-82-8 | Methane (natural gas) | -- | -- | -- | -- | -- | -- | -- | XX | XX |
| 67-56-1 | Methanol | X | X | SAR0 | 500 | 130 | X | X | 29,400 | 7,350 |
| 74-87-3 | Methyl chloride | 1.30e-02 | 6.30e-03 | C,3 | X | 1138.4 | X | 1550 | 550 | 138 |

## Table K-8. Chemicals in the CDP inventory classified as potentially toxic

| Cas # | Material | Chronic | | | | | | | Aquatic ecotoxicity | |
|---|---|---|---|---|---|---|---|---|---|---|
| | | oral SF (mg/kg-day)$^{-1}$ | inhal SF (mg/kg-day)$^{-1}$ | WOE (EPA & IARC)(a) | oral NOAEL (b) (mg/kg-day) | inhal NOAEL (b) (mg/m$^3$) | oral LOAEL (b,c) (mg/kg-day) | inhal LOAEL (b,c) (mg/m$^3$) | fish LC50 (mg/L) | fish NOAEL (mg/L) |
| 78-93-3 | Methyl ethyl ketone | X | X | D | 125 | 8047 | X | X | 3,220 | 805 |
| 60-34-4 | Methyl hydrazine | 3 | 17.2 | A3 | -- | -- | -- | -- | XX | XX |
| 80-62-6 | Methyl methacrylate | X | X | SAR0 | 7.5 | 111.7 | X | X | 259 | 65 |
| 1634-04-4 | Methyl tert butyl ether | X | X | SAR0 | 100 | 2880 | X | X | 786 | 197 |
| 7439-98-7 | Molybdenum (Mo) | -- | -- | -- | X | X | 0.14 | X | 157 | 0.125 |
| no CAS# | Molybdenum cmpds [Molybdenum (Mo II, Mo III, Mo IV, Mo V, Mo VI)] | -- | -- | -- | -- | -- | -- | -- | 157 | 0.125 |
| 7803-62-5 | Monosilane Gas | -- | -- | -- | -- | -- | -- | -- | XX | XX |
| 110-91-8 | Morpholine | X | X | 3 | X | X | X | 36 | | |
| 91-20-3 | Naphthalene | X | X | C | 71 | X | X | 9.3 | 6.0 | 0.59 |
| 79-15-2 | N-bromoacetamide (NBA) | -- | -- | -- | -- | -- | -- | -- | XX | XX |
| 123-86-4 | N-butyl acetate [Butyl acetate] | -- | -- | -- | X | X | X | 210 | XX | XX |
| 7440-00-8 | Neodymium (Nd) | -- | -- | -- | -- | -- | -- | -- | XX | XX |
| 7440-02-0 | Nickel (Ni) | X | X | A | 5 | X | X | X | 2.48 | 0.09 |
| "20-14-4" | Nickel cmpds (as NiCl2) [Nickel (Ni++, Ni3+)] | X | X | A,1 | -- | -- | -- | -- | 27 | 1.0 |
| 14797-55-8 | Nitrates | -- | -- | -- | 1.6 | X | X | X | 2,213 | 213 |
| 7697-37-2 | Nitric Acid | -- | -- | -- | -- | -- | -- | -- | 26 | 1.0 |
| 14797-65-0 | Nitrites (NO2-) | -- | -- | -- | 1.6 | X | X | X | 225 | 1.0 |
| 10102-44-0 | Nitrogen Dioxide | -- | -- | -- | -- | -- | -- | -- | 196 | 19.6 |
| 7783-54-2 | Nitrogen fluoride (nitrogen trifluoride) | -- | -- | -- | -- | -- | -- | -- | XX | XX |
| no CAS# | Nitrogen Oxides (NOx) | -- | -- | -- | -- | -- | -- | -- | XX | XX |
| 10024-97-2 | Nitrous oxide | -- | -- | -- | -- | -- | -- | -- | XX | XX |
| 10043-35-3 | orthoboric acid | -- | -- | -- | 67 | X | 62.5 | X | XX | XX |
| 95-47-6 | o-xylene | X | X | D | 179 | X | X | X | 16.0 | 2.0 |
| 608-93-5 | Pentachlorobenzene | X | X | D | X | X | 8.3 | X | XX | XX |
| 87-86-5 | Pentachlorophenol | X | X | B2 | 3 | X | X | X | XX | XX |
| 109-66-0 | Pentane | X | X | D | -- | -- | -- | -- | XX | XX |
| 7601-90-3 | Perchloric acid | -- | -- | -- | -- | -- | -- | -- | XX | XX |
| 76-16-4 | Perfluoroethane (Hexafluorocarbon) | -- | -- | -- | X | X | X | 1.17e+06 | XX | XX |
| 75-73-0 | Perfluoromethane (CF4) | -- | -- | -- | -- | -- | -- | -- | XX | XX |

## Table K-8. Chemicals in the CDP inventory classified as potentially toxic

| Cas # | Material | Chronic | | | | | | | Aquatic ecotoxicity | |
|---|---|---|---|---|---|---|---|---|---|---|
| | | oral SF (mg/kg-day)$^{-1}$ | inhal SF (mg/kg-day)$^{-1}$ | WOE (EPA & IARC)(a) | oral NOAEL (b) (mg/kg-day) | inhal NOAEL (b) (mg/m$^3$) | oral LOAEL (b,c) (mg/kg-day) | inhal LOAEL (b,c) (mg/m$^3$) | fish LC50 (mg/L) | fish NOAEL (mg/L) |
| 10450-60-9 | Periodic Acid | -- | -- | -- | -- | -- | -- | -- | XX | XX |
| No CAS # | Petroleum | -- | -- | -- | -- | -- | -- | -- | XX | XX |
| 85-01-8 | Phenanthrene (category: PAH) | X | X | D | -- | -- | -- | -- | XX | XX |
| 108-95-2 | Phenol | X | X | D,3 | 60 | X | X | X | 34.0 | 8.0 |
| 98-67-9 | Phenolsulphonic Acid | -- | -- | -- | -- | -- | -- | -- | XX | XX |
| 57583-54-7 (d) | Phosphate ester, plastic components | -- | -- | -- | 1300 | X | X | X | XX | XX |
| 7803-51-2 | Phosphine gas | -- | -- | -- | 0.026 | 0.25 | X | X | XX | XX |
| 7664-38-2 | phosphoric acid | -- | -- | -- | X | 50 | X | 180 | 70.0 | 4.0 |
| 7723-14-0 | Phosphorus | X | X | D | 1.50e-02 | X | X | X | 0.02 | -- |
| 1314-56-3 | Phosphorus Pentoxide | -- | -- | -- | -- | -- | -- | -- | -- | -- |
| NA | PM [particulates, total] | -- | -- | -- | -- | -- | -- | -- | XX | XX |
| NA | PM-10 [Particulates < 10 microns] | -- | -- | -- | -- | -- | -- | -- | XX | XX |
| 1336-36-3 | Polychloriniated biphenyl (PCB) | X | X | B2,2A | 7.00e-03 | X | X | X | 3.0 | 0.14 |
| 9016-45-9 | Polyethylene mono(nonylphenyl)ether glycol [Tergitol NP-33 (glycol ether)] | -- | -- | -- | 1000 | X | 67.5 | X | XX | XX |
| 9002-89-5 | Polyvinyl alcohol | X | X | 3 | -- | -- | -- | -- | XX | XX |
| 9003-39-8 | Polyvinyl Pyrrolidone (PVP) | X | X | 3 | 550 | X | 5500 | X | XX | XX |
| 25134-01-4 | PPE [Polyphenylene ether] | -- | -- | -- | -- | -- | -- | -- | XX | XX |
| 123-38-6 | Propionaldehyde | X | X | SAR3 | X | 200 | X | X | 44.0 | 11.0 |
| 115-07-1 | Propylene | X | X | SAR0 | X | 9375 | X | X | 5.0 | 1.0 |
| 108-32-7 | Propylene carbonate | -- | -- | -- | -- | -- | -- | -- | XX | XX |
| 57-55-6 | propylene glycol | -- | -- | -- | X | 170 | X | X | XX | XX |
| 108-65-6 | propylene glycol monomethyl ether acetate [1-Methoxy-2-propyl Acetate (glycol ether)] | -- | -- | -- | -- | -- | -- | -- | XX | XX |
| 129-00-0 | Pyrene (category: PAH) | X | X | D | 75 | X | X | X | XX | XX |
| 68784-83-8 (d) | Red phosphors | -- | -- | -- | -- | -- | -- | -- | XX | XX |
| No CAS# | Red phosphors ($Y_2O_2S.Eu$) | -- | -- | -- | -- | -- | -- | -- | XX | XX |
| No CAS # | Rubidium (Rb+) | -- | -- | -- | -- | -- | -- | -- | -- | -- |
| 7440-20-2 | Scandium (Sc) | -- | -- | -- | -- | -- | -- | -- | XX | XX |
| 7782-49-2 | Selenium (Se) | X | X | D | 1.50e-02 | X | X | X | XX | XX |

## Table K-8. Chemicals in the CDP inventory classified as potentially toxic

| Cas # | Material | Chronic | | | | | | | Aquatic ecotoxicity | |
|---|---|---|---|---|---|---|---|---|---|---|
| | | oral SF (mg/kg-day)$^{-1}$ | inhal SF (mg/kg-day)$^{-1}$ | WOE (EPA & IARC)(a) | oral NOAEL (b) (mg/kg-day) | inhal NOAEL (b) (mg/m$^3$) | oral LOAEL (b,c) (mg/kg-day) | inhal LOAEL (b,c) (mg/m$^3$) | fish LC50 (mg/L) | fish NOAEL (mg/L) |
| 7440-21-3 | Silicon (Si) | -- | -- | -- | -- | -- | -- | -- | XX | XX |
| 7440-22-4 | Silver | X | X | D | X | X | 1.40e-02 | X | 4.00e-03 | 0.001 |
| no CAS# | Silver compounds [Silver (Ag+)] | X | X | D | X | X | 1.40e-02 | X | 12.0 | 0.001 |
| 10588-01-9 | Sodium Dichromate | X | X | 3 | X | X | 0.18 | 0.25 | XX | XX |
| 2151247 | Sodium Dichromate Dihydrate (VI) | -- | -- | -- | -- | -- | -- | -- | XX | XX |
| 13472-35-0 | sodium dihydrogen phosphate dihydrate | -- | -- | -- | -- | -- | -- | -- | XX | XX |
| 7681-52-9 | Sodium Hypochlorite | X | X | 3 | 2.1 | X | X | X | XX | XX |
| 7681-57-4 | Sodium Metabisulfite | X | X | 3 | -- | -- | -- | -- | XX | XX |
| 7775-27-1 | Sodium Persulfate | -- | -- | -- | -- | -- | -- | -- | XX | XX |
| No CAS # | Strontium (Sr II) | -- | -- | -- | 190 | X | X | X | -- | -- |
| 7440-24-6 | Strontium (Sr) | -- | -- | -- | 190 | X | X | X | XX | XX |
| 1633-05-2 | Strontium carbonate | -- | -- | -- | 190 | X | X | X | XX | XX |
| 100-42-5 | Styrene | X | X | C,2B | 100 | 565 | X | X | 4.0 | 0.44 |
| 7446-09-5 | Sulfur dioxide | X | X | 3 | X | 0.104 | X | X | XX | XX |
| 2551-62-4 | sulfur hexafluoride | -- | -- | -- | -- | -- | -- | -- | XX | XX |
| no CAS# | sulfur oxides (SOx) | -- | -- | -- | -- | -- | -- | -- | XX | XX |
| 7664-93-9 | sulfuric acid | X | X | 1 | X | 0.1 | X | X | 31.0 | 2.0 |
| 10124-29-5 | Sulfuric acid, aluminum salt | -- | -- | -- | X | X | 154 | X | XX | XX |
| 127-18-4 | tetrachloroethylene | 5.20e-02 | 2.00e-03 | B2,2B | 14 | 740.2 | X | X | 17.0 | 2.0 |
| 109-99-9 | Tetrahydrofuran (THF) | -- | -- | -- | 782 | 0.2 | X | X | XX | XX |
| 75-59-2 | Tetramethyl ammonium hydroxide (TMAH) | -- | -- | -- | -- | -- | -- | -- | XX | XX |
| 7440-28-0 | Thallium (Tl) | -- | -- | -- | -- | -- | -- | -- | XX | XX |
| 7440-29-1 | Thorium (Th) | X | X | A | -- | -- | -- | -- | XX | XX |
| 7440-31-5 | Tin (Sn) | -- | -- | -- | -- | -- | -- | -- | 626.0 | 62.6 |
| No CAS # | Tin (Sn++, Sn4+) | -- | -- | -- | -- | -- | -- | -- | 626.0 | 62.6 |
| 7440-32-6 | Titanium | X | X | C | X | 0.8 | 1146 | X | -- | -- |
| 7550-45-0 | Titanium tetrachloride | -- | -- | -- | X | 9.00e-03 | X | X | 25.0 | 1.0 |
| 108-88-3 | Toluene | X | X | D,3 | 100 | 411.1 | X | X | 34.0 | 4.0 |
| 1025-15-6 | triallyl isocyanurate | -- | -- | -- | -- | -- | -- | -- | XX | XX |

## Table K-8. Chemicals in the CDP inventory classified as potentially toxic

| Cas # | Material | Chronic | | | | | | | Aquatic ecotoxicity | |
|---|---|---|---|---|---|---|---|---|---|---|
| | | oral SF (mg/kg-day)$^{-1}$ | inhal SF (mg/kg-day)$^{-1}$ | WOE (EPA & IARC)(a) | oral NOAEL (b) (mg/kg-day) | inhal NOAEL (b) (mg/m$^3$) | oral LOAEL (b,c) (mg/kg-day) | inhal LOAEL (b,c) (mg/m$^3$) | fish LC50 (mg/L) | fish NOAEL (mg/L) |
| 79-01-6 | trichloroethylene (TCE) | 1.10e-02 | 6.00e-03 | B2,3 | 24 | 586.6 | X | X | 44.0 | 8.0 |
| 75-69-4 | Trichlorofluoromethane (CFC 11) | -- | -- | -- | X | X | 349 | X | XX | XX |
| 1330-78-5 | Tricresyl phosphate | -- | -- | -- | -- | -- | -- | -- | XX | XX |
| 112-27-6 | Triethylene Glycol | -- | -- | -- | X | X | 1200 | X | 8.81e+04 | 8,810 |
| 115-86-6 | Triphenyl phosphate | -- | -- | -- | -- | -- | -- | -- | XX | XX |
| 7440-33-7 | Tungsten (W) | -- | -- | -- | -- | -- | -- | -- | XX | XX |
| 1344-59-8 | $U_3O_8$ (yellowcake) | -- | -- | -- | -- | -- | -- | -- | XX | XX |
| 7440-61-1 | Uranium (U) | X | X | A1 | 0.2 | X | X | X | XX | XX |
| 7440-62-2 | Vanadium (V) | -- | -- | -- | 3.00e-03 | X | X | X | XX | XX |
| No CAS # | Vanadium (V3+, V5+) | -- | -- | -- | -- | -- | -- | -- | -- | -- |
| 108-05-4 | Vinyl acetate | X | X | SAR0 | 100 | 176 | X | X | 100 | 25.0 |
| 75-01-4 | Vinyl chloride | 1.4 | 3.08e-02 | A,1 | X | 6.98e+04 | X | X | 143 | 36.0 |
| 1330-20-7 | Xylene (C24H30) [mixed isomers] | X | X | D | 179 | X | X | X | 13 | 1.0 |
| 7440-66-6 | Zinc (Zn) | X | X | D | 0.9 | X | 1 | X | 9.00e-02 | 0.036 |
| No CAS # | Zinc (Zn++) | -- | -- | -- | -- | -- | -- | -- | 17.0 | -- |
| 14940-68-2 | Zircon sand [Zircon (Zr)] | -- | -- | -- | -- | -- | -- | -- | XX | XX |
| 7440-67-7 | Zirconium (Zr) | -- | -- | -- | 3,494 | X | X | X | XX | XX |

Key:
(a)=See Table 3-3 in Section 3.1.2.12 for a description of WOE classifications.
(b)=only lowest value of the NOAEL (or LOAEL/10) is used to calculate chronic, non-cancer effects
(c)=LOAEL only needed if no NOAEL found
(d)=CAS # was provided by a company, but could not be confirmed.
XX=aquatic toxicity data not needed because there are no waterborne releases of this chemical in the CDP LCIs.
X=data not needed because other data are provided to calculate impact score (e.g., LOAEL not needed if NOAEL provided, and WOE used if SF not available).
SAR0=not a probable carcinogen based on structure-activity relationship (SAR) evaluation.
SAR1=possible carcinogen based on SAR evaluation.
- -=no data available, defaulted to mean hazard value (see Section 3.1.2.12 for an explanation of hazard values).
Sources:

- Oral and inhalation slope factors (SF): Integrated Risk Information System (IRIS) or Health Effects Assessment Summary Tables (HEAST) (EPA, 1994) as cited in Risk Assessment Information System (RAIS): http://risk.lsd.ornl.gov/rap_hp.shtml.
- Weight of Evidence (WOE): IRIS Web site (http://www.epa.gov/IRIS).
- Oral no observable adverse effect level (NOAEL), inhalation NOAEL, oral lowest obserable adverse effect level (LOAEL) and inhalation LOAEL: IUCLID, 1996; HEAST, 1994; Kincaid and Geibig, 1998; EPA, 2000a; SRC, 2000; EPA, 2000b; Geibig and Swanson, 2000; Sax and Lewis, 1987; NIOSH, 1978; EPA, 1984; and EPA, 1987.
- Fish LC50 and fish NOAEL: EPA, 2001; HSDB; Davis et al. 1994, Appendix E; and Geiger et al., 1984, 1985, 1986, 1988, 1990.

## Table K-9. List of Materials Excluded from Toxic Classification

| CAS # | Material | Reason for Exclusion [a] |
|---|---|---|
| NA | ABS plastic | judgment |
| 21645-51-2 | Aluminium Hydroxide (Al(OH)3) | GRAS |
| 10043-01-3 | Aluminium Sulfate (Al2(SO4)3) | GRAS |
| 10043-01-3 | Aluminum Sulfate (Al2(SO4)3) | GRAS |
| 7440-37-1 | Argon (Ar gas) | judgment |
| 1302-78-9 | Bentonite (Al2O3.4SiO2.H2O, in ground) | judgment |
| NA | BOD (Biological Oxygen Demand) | judgment |
| 106-97-8 | Butane (n-C4H10) | GRAS |
| 25167-67-3 | Butene (1-CH3CH2CHCH2) | judgment |
| 7440-70-2 | Calcium (Ca) | judgment |
| No CAS # | Calcium (Ca++) | judgment |
| 10043-52-4 | Calcium Chloride (CaCl2) | judgment |
| 1305-62-0 | Calcium hydroxide [Ca(OH)2, hydrated lime] | judgment |
| 7778-18-9 | Calcium Sulfate | judgment |
| 124-38-9 | Carbon Dioxide (CO2) | judgment |
| NA | Carbonate ion [Carbonates (CO3--, HCO3-, CO2] | judgment |
| NA | COD (Chemical Oxygen Demand) | judgment |
| 16887-00-6 | Chloride (Cl-) | judgment |
| 1318-74-7 | Clay (in ground) | judgment |
| NA | Dissolved solids | judgment |
| No CAS # | Dolomite (CaCO3.MgCO3, in ground) | judgment |
| 26265-08-7 | Epoxy resin (PC Board-epoxy resin) | judgment |
| 141-78-6 | Ethyl acetate (C4H8O2) | GRAS |
| 64-17-5 | Ethanol (Ethyl Alcohol) | GRAS |
| 7705-08-0 | Ferric chloride (FeCl3) | GRAS |
| NA | Ferrite | judgment |
| No CAS # | Glass | judgment |
| 7440-59-7 | Helium (He) | GRAS |
| NA | Nonmethane hydrocarbons | judgment |
| NA | Hydrocarbons (unspecified) | judgment |
| 1333-74-0 | Hydrogen gas (H2) | judgment |
| 14380-61-1 | Hypochlorite (ClO-) | judgment |
| 20461-54-5 | Iodide (I-) | judgment |
| 7553-56-2 | Iodine (I) | judgment |
| 7439-89-6 | Iron (Fe) | judgment |
| No CAS # | Iron (Fe++, Fe3+) | judgment |
| 7720-78-7 | Iron Sulfate (FeSO4, ore) | judgment |
| 8008-20-6 | Kerosene | judgment |

**Table K-9. List of Materials Excluded from Toxic Classification**

| CAS # | Material | Reason for Exclusion [a] |
|---|---|---|
| 7439-90-9 | Krypton Gas | judgment |
| No CAS # | Lignite (in ground) | judgment |
| 1305-78-8 | Lime | judgment |
| 471-34-1 | Limestone (CaCO3, in ground) | judgment |
| 7439-95-4 | Magnesium (Mg) | judgment |
| No CAS # | Magnesium cmpds [Magnesium (Mg++)] | judgment |
| 7440-01-9 | Neon | judgment |
| 7727-37-9 | Nitrogen | GRAS |
| 74-98-6 | n-propane [Propane (C3H8)] | GRAS |
| NA | Oil & grease | judgment |
| No CAS # | Olivine ((Mg,Fe)2SiO4, ore) | judgment |
| 144-62-7 | Oxalic Acid (C2H2O4) | judgment |
| 7782-44-7 | Oxygen (O2) | judgment |
| NA | Phosphates (PO4-3) | judgment |
| 9011-87-4 | Poly(methyl methacrylate) [PMMA (Acrylic resin)] | judgment |
| 25971-63-5 | Polycarbonate resin | judgment |
| NA | Polycyclic Aromatic Hydrocarbons (PAH, unspecified) | judgment |
| 9002-88-4 | polyethylene (PE) foam, cushion | judgment |
| No CAS # | Polyimide Resin | judgment |
| 9003-53-6 | Polystyrene [Styrene, polymer (C8H8)] | judgment |
| 7440-09-7 | Potassium (K) | judgment |
| No CAS # | Potassium (K+) | judgment |
| 584-08-7 | Potassium carbonate (K2CO3) | judgment |
| 7447-40-7 | Potassium Chloride (KCl, as K2O, in ground) | judgment |
| 79-09-4 | Propionic Acid (CH3CH2COOH) | GRAS |
| 1332-09-8 | Pumice | judgment |
| 1309-36-0 | Pyrite (FeS2, ore) | judgment |
| 14808-60-7 | Silica sand [Silicon dioxide (SiO2)] | GRAS |
| 7440-23-5 | Sodium (Na) | judgment |
| No CAS # | Sodium (Na+) | judgment |
| 497-19-8 | Sodium carbonate (Na2CO3, soda ash) | judgment |
| 7647-14-5 | Sodium Chloride (NaCl, in ground or in sea) | GRAS |
| 1310-73-2 | Sodium hydroxide (NaOH) | judgment |
| 9003-55-8 | Styrene-butadiene copolymers (C12H14) | judgment |
| 14808-79-8 | Sulfates (SO4--) | judgment |
| 18496-25-8 | Sulfides (S--) | judgment |
| 14265-45-3 | Sulfites (SO3--) | judgment |
| 7704-34-9 | Sulfur | judgment |

## Table K-9. List of Materials Excluded from Toxic Classification

| CAS # | Material | Reason for Exclusion [a] |
|---|---|---|
| NA | Suspended Solids | judgment |
| 14807-96-6 | Talcum (4SiO2.3MgO.H2O, ore) | judgment |
| No CAS # | TOCs (Total organic compounds) | judgment |

[a] NOTES:

(1) GRAS = Generally Regarded as Safe by the U.S. Food and Drug Administration.

(2) Some materials were excluded based on judgement if they are nutrients: calcium, chloride, iodine, iron, magnesium, phosphorous, potassium, sodium (per the Risk Assessment Guidance for Superfund [RAGS], EPA/540/1-89/002, December 1989 and the RAGS Region IV update).

(3) This list was reviewed by the U.S. EPA DFE Workgroup (Appendix C, Table C-2).

**Table K-10. Chemicals used to calculate mean slope factor values for calculating carcinogenic hazard value**

| Chemical | CAS # | Oral Slope Factor (mg/kg-day)$^{-1}$ | Inhalation Slope Factor (mg/kg-day)$^{-1}$ |
|---|---|---|---|
| Acephate | 30560-19-1 | 8.70E-03 | |
| Acetaldehyde | 75-07-0 | | 7.70E-03 |
| Acrylamide | 79-06-1 | 4.50E+00 | 4.50E+00 |
| Acrylonitrile | 107-13-1 | 5.40E-01 | 2.40E-01 |
| Alachlor | 15972-60-8 | 8.00E-02 | |
| Aldrin | 309-00-2 | 1.70E+01 | 1.70E+01 |
| Aniline | 62-53-3 | 5.70E-03 | |
| Aramite | 140-57-8 | 2.50E-02 | 2.50E-02 |
| Aroclor 1016 | 12674-11-2 | 4.00E-01 | 4.00E-01 |
| Aroclor 1016 | 12674-11-2 | 2.00E+00 | 2.00E+00 |
| Aroclor 1221 | 11104-28-2 | 4.00E-01 | 4.00E-01 |
| Aroclor 1221 | 11104-28-2 | 2.00E+00 | 2.00E+00 |
| Aroclor 1232 | 11141-16-5 | 4.00E-01 | 4.00E-01 |
| Aroclor 1232 | 11141-16-5 | 2.00E+00 | 2.00E+00 |
| Aroclor 1242 | 53469-21-9 | 4.00E-01 | 4.00E-01 |
| Aroclor 1242 | 53469-21-9 | 2.00E+00 | 2.00E+00 |
| Aroclor 1248 | 12672-29-6 | 4.00E-01 | 4.00E-01 |
| Aroclor 1248 | 12672-29-6 | 2.00E+00 | 2.00E+00 |
| Aroclor 1254 | 11097-69-1 | 4.00E-01 | 4.00E-01 |
| Aroclor 1254 | 11097-69-1 | | 2.00E+00 |
| Aroclor 1260 | 11096-82-5 | 4.00E-01 | 4.00E-01 |
| Aroclor 1260 | 11096-82-5 | 2.00E+00 | 2.00E+00 |
| Arsenic, Inorganic | 7440-38-2 | 1.50E+00 | 5.00E+01 |
| Atrazine | 1912-24-9 | 2.22E-01 | |
| Azobenzene | 103-33-3 | 1.10E-01 | 1.10E-01 |
| Benz[a]anthracene | 56-55-3 | 7.30E-01 | 3.10E-01 |
| Benzene | 71-43-2 | 5.50E-02 | 2.90E-02 |
| Benzidine | 92-87-5 | 2.30E+02 | 2.30E+02 |
| Benzo[a]pyrene | 50-32-8 | 7.30E+00 | 3.10E+00 |
| Benzo[b]fluoranthene | 205-99-2 | 7.30E-01 | 3.10E-01 |
| Benzo[k]fluoranthene | 207-08-9 | 7.30E-02 | 3.10E-02 |
| Benzotrichloride | 98-07-7 | 1.30E+01 | |
| Benzyl Chloride | 100-44-7 | 1.70E-01 | |
| Beryllium and compounds | 7440-41-7 | 4.30E+00 | 8.40E+00 |
| Bis(2-chloro-1-methylethyl)ether (Technical) | 108-60-1 | 7.00E-02 | 3.50E-02 |
| Bis(2-chloroethyl)ether | 111-44-4 | 1.10E+00 | 1.10E+00 |

**Table K-10. Chemicals used to calculate mean slope factor values for calculating carcinogenic hazard value**

| Chemical | CAS # | Oral Slope Factor $(mg/kg\text{-}day)^{-1}$ | Inhalation Slope Factor $(mg/kg\text{-}day)^{-1}$ |
|---|---|---|---|
| Bis(2-ethylhexyl)phthalate | 117-81-7 | 1.40E-02 | |
| Bis(chloromethyl)ether | 542-88-1 | 2.20E+02 | 2.20E+02 |
| Bromodichloromethane | 75-27-4 | 6.20E-02 | |
| Bromoform | 75-25-2 | 7.90E-03 | 3.90E-03 |
| Butadiene, 1,3- | 106-99-0 | | 1.80E+00 |
| Cadmium (Diet) | 7440-43-9 | | 6.10E+00 |
| Cadmium (Water) | 7440-43-9 | | 6.10E+00 |
| Captafol | 2425-06-1 | 8.60E-03 | |
| Captan | 133-06-2 | 3.50E-03 | |
| Carbazole | 86-74-8 | 2.00E-02 | |
| Carbon Tetrachloride | 56-23-5 | 1.30E-01 | 5.30E-02 |
| Chloranil | 118-75-2 | 4.03E-01 | |
| Chlordane | 057-74-9 | 3.50E-01 | 1.30E+00 |
| Chloro-2-methylaniline HCl, 4- | 3165-93-3 | 4.60E-01 | |
| Chloro-2-methylaniline, 4- | 95-69-2 | 5.80E-01 | |
| Chlorobenzilate | 510-15-6 | 2.70E-01 | 2.70E-01 |
| Chlorodibromoethane | 73506-94-2 | 8.40E-02 | |
| Chloroform | 67-66-3 | 6.10E-03 | 8.10E-02 |
| Chloromethane | 74-87-3 | 1.30E-02 | 6.30E-03 |
| Chloronitrobenzene, o- | 88-73-3 | 2.50E-02 | |
| Chloronitrobenzene, p- | 121-73-3 | 1.80E-02 | |
| Chlorothalonil | 1897-45-6 | 1.10E-02 | |
| Chromium VI (chromic acid mists) | 18540-29-9 | | 4.10E+01 |
| Chromium VI (particulates) | 18540-29-9 | | 4.10E+01 |
| Chrysene | 218-01-9 | 7.30E-03 | 3.10E-03 |
| Coke Oven Emissions | 8007-45-2 | | 2.20E+00 |
| Crotonaldehyde, trans- | 123-73-9 | 1.90E+00 | |
| Cyanazine | 21725-46-2 | 8.40E-01 | |
| Cyclohexane, 1,2,3,4,5-pentabromo-6-chloro- | 87-84-3 | 2.30E-02 | |
| DDD | 72-54-8 | 2.40E-01 | |
| DDE | 72-55-9 | 3.40E-01 | |
| DDT | 50-29-3 | 3.40E-01 | 3.40E-01 |
| Di(2-ethylhexyl)adipate | 103-23-1 | 1.20E-03 | |
| Diallate | 2303-16-4 | 6.10E-02 | |
| Dibenz[a,h]anthracene | 53-70-3 | 7.30E+00 | 3.10E+00 |
| Dibromo-3-chloropropane, 1,2- | 96-12-8 | 1.40E+00 | 2.40E-03 |

**Table K-10. Chemicals used to calculate mean slope factor values for calculating carcinogenic hazard value**

| Chemical | CAS # | Oral Slope Factor $(mg/kg\text{-}day)^{-1}$ | Inhalation Slope Factor $(mg/kg\text{-}day)^{-1}$ |
|---|---|---|---|
| Dibromochloromethane | 124-48-1 | 8.40E-02 | |
| Dibromoethane, 1,2- | 106-93-4 | 8.50E+01 | 7.60E-01 |
| Dichloro-2-butene, 1,4- | 764-41-0 | | 9.30E+00 |
| Dichlorobenzene, 1,4- | 106-46-7 | 2.40E-02 | |
| Dichlorobenzidine, 3,3'- | 91-94-1 | 4.50E-01 | |
| Dichloroethane, 1,2- | 107-06-2 | 9.10E-02 | 9.10E-02 |
| Dichloroethylene, 1,1- | 75-35-4 | 6.00E-01 | 1.20E+00 |
| Dichloropropane, 1,2- | 78-87-5 | 6.80E-02 | |
| Dichloropropene, 1,3- | 542-75-6 | 1.00E-01 | 1.40E-02 |
| Dichlorvos | 62-73-7 | 2.90E-01 | |
| Dieldrin | 60-57-1 | 1.60E+01 | 1.60E+01 |
| Diethylstilbesterol | 56-53-1 | 4.70E+03 | 4.90E+02 |
| Dimethoxybenzidine, 3,3'- | 119-90-4 | 1.40E-02 | |
| Dimethylaniline HCl, 2,4- | 21436-96-4 | 5.80E-01 | |
| Dimethylaniline, 2,4- | 095-68-1 | 7.50E-01 | |
| Dimethylbenzidine, 3,3'- | 119-93-7 | 9.20E+00 | |
| Dimethylhydrazine, 1,1- | 57-14-7 | 3.00E+00 | 1.72E+01 |
| Dinitrotoluene Mixture, 2,4/2,6- | 25321-14-6 | 6.80E-01 | |
| Dinitrotoluene, 2,4- | 121-14-2 | 6.80E-01 | |
| Dinitrotoluene, 2,6- | 606-20-2 | 6.80E-01 | |
| Dioxane, 1,4- | 123-91-1 | 1.10E-02 | |
| Diphenylhydrazine, 1,2- | 122-66-7 | 8.00E-01 | 8.00E-01 |
| Direct Black 38 | 1937-37-7 | 8.60E+00 | |
| Direct Blue 6 | 2602-46-2 | 8.10E+00 | |
| Direct Brown 95 | 16071-86-6 | 9.30E+00 | |
| Epichlorohydrin | 106-89-8 | 9.90E-03 | 4.20E-03 |
| Ethyl Acrylate | 140-88-5 | 4.80E-02 | |
| Ethylbenzene | 100-41-4 | | 3.85E-03 |
| Ethylene Oxide | 75-21-8 | 1.02E+00 | 3.50E-01 |
| Ethylene Thiourea | 96-45-7 | 1.10E-01 | |
| Folpet | 133-07-3 | 3.50E-03 | |
| Fomesafen | 72178-02-0 | 1.90E-01 | |
| Formaldehyde | 50-00-0 | | 4.50E-02 |
| Furazolidone | 67-45-8 | 3.80E+00 | |
| Furium | 531-82-8 | 5.00E+01 | |
| Furmecyclox | 60568-05-0 | 3.00E-02 | |

**Table K-10. Chemicals used to calculate mean slope factor values for calculating carcinogenic hazard value**

| Chemical | CAS # | Oral Slope Factor $(mg/kg\text{-}day)^{-1}$ | Inhalation Slope Factor $(mg/kg\text{-}day)^{-1}$ |
|---|---|---|---|
| Heptachlor | 76-44-8 | 4.50E+00 | 4.50E+00 |
| Heptachlor Epoxide | 1024-57-3 | 9.10E+00 | 9.10E+00 |
| Hexachlorobenzene | 118-74-1 | 1.60E+00 | 1.60E+00 |
| Hexachlorobutadiene | 87-68-3 | 7.80E-02 | 7.80E-02 |
| Hexachlorocyclohexane, Alpha- | 319-84-6 | 6.30E+00 | 6.30E+00 |
| Hexachlorocyclohexane, Beta- | 319-85-7 | 1.80E+00 | 1.80E+00 |
| Hexachlorocyclohexane, Gamma- | 58-89-9 | 1.30E+00 | |
| Hexachlorocyclohexane, Technical | 608-73-1 | 1.80E+00 | 1.80E+00 |
| Hexachlorodibenzo-p-dioxin, Mixture | 19408-74-3 | 6.20E+03 | 4.55E+03 |
| Hexachloroethane | 67-72-1 | 1.40E-02 | 1.40E-02 |
| Hexahydro-1,3,5-trinitro-1,3,5-triazine (RDX) | 121-82-4 | 1.10E-01 | |
| HpCDD, 2,3,7,8- | 37871-00-4 | 1.50E+03 | 1.50E+03 |
| HpCDF, 2,3,7,8- | 38998-75-3 | 1.50E+03 | 1.50E+03 |
| HxCDD, 2,3,7,8- | 34465-46-8 | 1.50E+04 | 1.50E+04 |
| HxCDF, 2,3,7,8- | 55684-94-1 | 1.50E+04 | 1.50E+04 |
| Hydrazine | 302-01-2 | 3.00E+00 | 1.70E+01 |
| Hydrazine Sulfate | 10034-93-2 | 3.00E+00 | 1.70E+01 |
| Indeno[1,2,3-cd]pyrene | 193-39-5 | 7.30E-01 | 3.10E-01 |
| Isophorone | 78-59-1 | 9.50E-04 | |
| Methoxy-5-nitroaniline, 2- | 99-59-2 | 4.60E-02 | |
| Methyl Hydrazine | 60-34-4 | 3.00E+00 | 1.72E+01 |
| Methyl-5-Nitroaniline, 2- | 99-55-8 | 3.30E-02 | |
| Methylaniline Hydrochloride, 2- | 636-21-5 | 1.80E-01 | |
| Methylene Chloride | 75-09-2 | 7.50E-03 | 1.65E-03 |
| Methylene-bis(2-chloroaniline), 4,4'- | 101-14-4 | 1.30E-01 | 1.30E-01 |
| Methylene-bis(N,N-dimethyl) Aniline, 4,4'- | 101-61-1 | 4.60E-02 | |
| Methylenebisbenzenamine, 4,4'- | 101-77-9 | 2.50E-01 | |
| Mirex | 2385-85-5 | 1.80E+00 | |
| Nickel Refinery Dust | NA | | 8.40E-01 |
| Nickel Subsulfide | 12035-72-2 | | 1.70E+00 |
| Nitrofurazone | 59-87-0 | 1.50E+00 | |
| Nitropropane, 2- | 79-46-9 | 9.50E+00 | 9.40E+00 |
| Nitrosodiethanolamine, N- | 1116-54-7 | 2.80E+00 | |
| Nitrosodiethylamine, N- | 55-18-5 | 1.50E+02 | 1.50E+02 |
| Nitrosodimethylamine, N- | 62-75-9 | 5.10E+01 | 5.10E+01 |
| Nitroso-di-N-butylamine, N- | 924-16-3 | 5.40E+00 | 5.40E+00 |

**Table K-10. Chemicals used to calculate mean slope factor values for calculating carcinogenic hazard value**

| Chemical | CAS # | Oral Slope Factor $(mg/kg\text{-}day)^{-1}$ | Inhalation Slope Factor $(mg/kg\text{-}day)^{-1}$ |
|---|---|---|---|
| Nitroso-di-N-propylamine, N- | 621-64-7 | 7.00E+00 | |
| Nitrosodiphenylamine, N- | 86-30-6 | 4.90E-03 | |
| Nitrosomethylethylamine, N- | 10595-95-6 | 2.20E+01 | |
| Nitroso-N-ethylurea, N- | 759-73-9 | 1.40E+02 | |
| Nitrosopyrrolidine, N- | 930-55-2 | 2.10E+00 | 2.10E+00 |
| OCDD | 3268-87-9 | 1.50E+02 | 1.50E+02 |
| OCDF | 39001-02-0 | 1.50E+02 | 1.50E+02 |
| PeCDD, 2,3,7,8- | 36088-22-9 | 7.50E+04 | 7.50E+04 |
| PeCDF, 1,2,3,7,8- | 57117-41-6 | 7.50E+04 | 7.50E+04 |
| PeCDF, 2,3,4,7,8- | 57117-31-4 | 7.50E+03 | 7.50E+03 |
| Pentachloronitrobenzene | 82-68-8 | 2.60E-01 | |
| Pentachlorophenol | 87-86-5 | 1.20E-01 | |
| Phenylenediamine, o- | 95-54-5 | 4.70E-02 | |
| Phenylphenol, 2- | 90-43-7 | 1.94E-03 | |
| Polybrominated Biphenyls | 59536-65-1 | 8.90E+00 | |
| Polychlorinated Biphenyls (high risk) | 1336-36-3 | 2.00E+00 | 2.00E+00 |
| Polychlorinated Biphenyls (low risk) | 1336-36-3 | 4.00E-01 | 4.00E-01 |
| Polychlorinated Biphenyls (lowest risk) | 1336-36-3 | 7.00E-02 | |
| Prochloraz | 67747-09-5 | 1.50E-01 | |
| Propylene Oxide | 75-56-9 | 2.40E-01 | 1.30E-02 |
| Quinoline | 91-22-5 | 1.20E+01 | |
| Simazine | 122-34-9 | 1.20E-01 | |
| Sodium Diethyldithiocarbamate | 148-18-5 | 2.70E-01 | |
| Stirofos (Tetrachlorovinphos) | 961-11-5 | 2.40E-02 | |
| TCDD, 2,3,7,8- | 1746-01-6 | 1.50E+05 | 1.50E+05 |
| TCDF, 2,3,7,8- | 51207-31-9 | 1.50E+04 | 1.50E+04 |
| Tetrachloroethane, 1,1,1,2- | 630-20-6 | 2.60E-02 | 2.60E-02 |
| Tetrachloroethane, 1,1,2,2- | 79-34-5 | 2.00E-01 | 2.00E-01 |
| Tetrachloroethylene | 127-18-4 | 5.20E-02 | 2.00E-03 |
| Tetrachlorotoluene, p- alpha, alpha, alpha- | 5216-25-1 | 2.00E+01 | |
| Toluene-2,4-diamine | 95-80-7 | 3.20E+00 | |
| Toluidine, o- (Methylaniline, 2-) | 95-53-4 | 2.40E-01 | |
| Toluidine, p- | 106-49-0 | 1.90E-01 | |
| Toxaphene | 8001-35-2 | 1.10E+00 | 1.10E+00 |
| Trichloroaniline HCl, 2,4,6- | 33663-50-2 | 2.90E-02 | |
| Trichloroaniline, 2,4,6- | 634-93-5 | 3.40E-02 | |

**Table K-10. Chemicals used to calculate mean slope factor values for calculating carcinogenic hazard value**

| Chemical | CAS # | Oral Slope Factor $(mg/kg\text{-}day)^{-1}$ | Inhalation Slope Factor $(mg/kg\text{-}day)^{-1}$ |
|---|---|---|---|
| Trichloroethane, 1,1,2- | 79-00-5 | 5.70E-02 | 5.70E-02 |
| Trichloroethylene | 79-01-6 | 1.10E-02 | 6.00E-03 |
| Trichlorophenol, 2,4,6- | 88-06-2 | 1.10E-02 | 1.00E-02 |
| Trichloropropane, 1,2,3- | 96-18-4 | 7.00E+00 | |
| Trifluralin | 1582-09-8 | 7.70E-03 | |
| Trimethyl Phosphate | 512-56-1 | 3.70E-02 | |
| Trinitrotoluene, 2,4,6- | 118-96-7 | 3.00E-02 | |
| Vinyl Bromide | 593-60-2 | | 1.10E-01 |
| Vinyl Chloride | 75-01-4 | 1.40E+00 | 3.08E-02 |
| geometric mean | | 0.71 | 1.70 |
| **count (n)** | | 175 | 105 |

blank=no data
Source: Risk Assessment Information System (RAIS), http://risk.lsd.ornl.gov/cgi-bin/tox/TOX_9801 (downloaded 11/00): IRIS/HEAST Slope Factors.

## REFERENCES

Davis, G. A., L. Kincaid, M. Swanson, T. Schultz, J. Bartmess, B. Griffith, and S. Jones. 1994. *Chemical Hazard Evaluation for Management Strategies: A Method for Ranking and Scoring Chemicals by Potential Human Health and Environmental Impacts, Appendix E*, United States Environmental Protection Agency, EPA/600/R-94/177, September.

EPA (U. S. Environmental Protection Agency). 2001. EPA data search of the U.S. EPA Ecotox Search engine (http://www.epa.gov/ecotox) provided to University of Tennessee, January.

EPA. 2000a. *Flexographic Ink Options: A Cleaner Technologies Substitutes Assessment (DRAFT).* EPA/744-R-00-004A&B. Washington, D.C. November.

EPA. 2000b. EPA data search provided to the University of Tennessee, December.

EPA. 1994. *Health Effects Assessment Summary Tables. Annual Update.* Environmental Criteria and Assessment Office, Office of Health and Environmental Assessment, Office of Research and Development, Cincinnati, OH.

EPA. 1987. *Health Effects Assessment for Dichlorobenzene.* Environmental Criteria and Assessment Office, Office of Health and Environmental Assessment, Office of Research and Development, Cincinnati, OH.

EPA. 1984. *Health Affects Document for Carbon Tetrachloride.* EPA/600/8-82-001F. Environmental Criteria and Assessment Office, Office of Health and Environmental Assessment, Office of Research and Development, Cincinnati, OH.

Geibig, J. and M. Swanson. 2000. *Printed Wiring Board Surface Finishes Draft Cleaner Technologies Substitutes Assessment.* University of Tennessee. EPA 744-R-00-013B, December.

Geiger, D. L., L. T. Brooke, D. J. Call and C. E. Northcott, eds. 1984. *Acute Toxicities of Organic Chemicals to Fathead Minnows (Pimephales promelas)*, Vol. 1. Center for Lake Superior Environmental Studies, University of Wisconsin, Superior, WI.

Geiger, D. L., L. T. Brooke, D. J. Call and C. E. Northcott, eds. 1985. *Acute Toxicities of Organic Chemicals to Fathead Minnows (Pimephales promelas)*, Vol. 2. Center for Lake Superior Environmental Studies, University of Wisconsin, Superior, WI.

Geiger, D. L., L. T. Brooke, D. J. Call and C. E. Northcott, eds. 1986. *Acute Toxicities of Organic Chemicals to Fathead Minnows (Pimephales promelas)*, Vol. 3. Center for Lake Superior Environmental Studies, University of Wisconsin, Superior, WI.

Geiger, D. L., L. T. Brooke, D. J. Call and C. E. Northcott, eds. 1988. *Acute Toxicities of Organic Chemicals to Fathead Minnows (Pimephales promelas)*, Vol. 4. Center for Lake Superior Environmental Studies, University of Wisconsin, Superior, WI.

Geiger, D. L., L. T. Brooke, D. J. Call and C. E. Northcott, eds. 1990. *Acute Toxicities of Organic Chemicals to Fathead Minnows (Pimephales promelas)*, Vol. 5. Center for Lake Superior Environmental Studies, University of Wisconsin, Superior, WI.

HSDB (Hazardous Substances Data Bank). National Library of Medicine, Toxicology Data Network (TOXNET) (http://toxnet.nlm.nih.gov/cgi-bin/sis/htmlgen?HSDB).

IUCLID (International Uniform Chemical Information Database). 1996. European Chemical Bureau, European Commission - JRC, Environment Institute, Ispra, Italy.

Kincaid, L. E. and J. R. Geibig. 1998. *Printed Wiring Board Cleaner Technologies Substitutes Assessment: Making Holes Conductive*. University of Tennessee. EPA 744-R-98-004a,b, August.

NIOSH (National Institute of Occupational Safety and Health). 1978. *Occupational Health Guideline for Carbon Monoxide.*

Sax, N. I and R. J. Lewis. 1987. *Hazardous Chemicals Desk Reference.* VanNostrand Reinhold, New York.

SRC (Syracuse Research Corporation). 2000. SRC data search provided to the University of Tennessee, December.

this page intentionally left blank

# APPENDIX L

## SECONDARY ISSUES TO THE USE LIFE-CYCLE STAGE OF COMPUTER DISPLAYS

this page intentionally left blank

# APPENDIX L

## SECONDARY ISSUES TO THE USE LIFE-CYCLE STAGE OF COMPUTER DISPLAYS

### 1. ELECTRIC AND MAGNETIC FIELDS (EMFs)

Electric and magnetic fields (EMFs) are invisible lines of force that surround any electrical device, including power lines, electrical wiring, and electrical equipment. Electric fields are produced by voltage and increase in strength as the voltage increases. Magnetic fields result from the flow of current through wires and or electrical devices and increase in strength as the current increases. Most electrical equipment has to be turned on for a magnetic field to be produced, but electric fields are present even when equipment is switched off as long as it is connected to an electric power source. Electric fields are weakened or shielded by materials that conduct electricity (including human skin). Magnetic fields, on the other hand, pass through most materials and are therefore more difficult to shield and of greater concern. Both electric and magnetic fields decrease with distance from the source (NIOSH, et al 1996).

Most information on EMFs from video display units (VDUs) pertains to CRT monitors. The following is excerpted from the World Health Organization fact sheet, "Video Display Units (VDUs) and Human Health (1998):"

> *"The typical VDU creates images in a large evacuated cathode-ray-tube (CRT) by directing a beam of high-energy electrons from the cathode onto.a special phosphor-coated glass screen. This coating emits light when struck by the fast-moving electrons. The electron beam creates the image from computer signals that control coils, at the back of the CRT, that sweep the electrons in the vertical and horizontal directions. These coils are called vertical and horizontal deflection coils. The electronic circuitry used to create the image gives rise to static electric and magnetic fields, as well as low and high frequency electromagnetic fields...*
>
> *Electric and magnetic fields are emitted in three different frequency ranges. The horizontal deflection coils emit fields operating predominantly in the frequency range 15-35kHz. Extremely low frequency (ELF) fields at 50 to 60 Hz come from the power supply, transformers and the vertical deflection coils. Finally, weak signals at higher radio frequencies (RF) come from the VDU's interior electronic circuitry and signals received from the computer."*

Very little information was found on the relative magnitude of EMFs emitted by CRTs and LCDs. However, typical household power operates at 50-60 Hz and 120 volts – these remain relatively constant no matter how much power in watts a piece of electrical equipment needs or draws. What fluctuates with power demand is current (in amperes, or amps). CRTs consume a greater quantity of power in watts, and therefore require a larger amount of electrical current in amps. Since magnetic fields increase in strength with increased current, it is assumed a CRT will

generate a larger magnetic field than an LCD. Additionally, some of the components discussed above, such as the horizontal and vertical deflection coils, are found in CRTs but not in LCDs. Thus, due to their power handling needs and capabilities, CRTs also generate EMFs that are not generated by LCDs. However, according to NoRad Corporation, a manufacturer and marketer of EMF shielding products for monitors, it is a common misconception that LCDs do not emit EMFs because of their smaller current draw; backlit LCD displays can emit significant levels of both magnetic fields and electric fields (NoRad, undated).

To address concerns about potential health effects from EMF exposure, in 1992 the U.S. Congress authorized the Electric and Magnetic Fields Research and Public Information Program (EMF-RAPID Program) and directed the National Institute of Environmental Health Sciences (NIEHS) and the Department of Energy (DOE) to direct and manage a program of research and analysis aimed at providing scientific evidence to clarify the potential for health risks from exposure to ELF-EMF (NIEHS, 1999). After several years of research, in 1999 NIEHS issued a report to Congress on the health effects from exposure to power-line frequency EMFs, which concluded the following (NIEHS, 1999):

> *"The scientific evidence suggesting that ELF-EMF exposures pose any health risk is weak. The strongest evidence for health effects comes from associations observed in human populations with two forms of cancer: childhood leukemia and chronic lymphocytic leukemia in occupationally exposed adults. While the support from individual studies is weak, the epidemiological studies demonstrate, for some methods of measuring exposure, a fairly consistent pattern of a small, increased risk with increasing exposure that is somewhat weaker for chronic lymphocytic leukemia than for childhood leukemia. In contrast, the mechanistic studies and the animal toxicology literature fail to demonstrate any consistent pattern across studies although sporadic finding of biological effects (including increased cancers in animals) have been reported. No indication of increased leukemia in experimental animals has been observed.*
> *The lack of connection between the human data and the experimental data (animal and mechanistic) severely complicates the interpretation of these results. The human data are in the "right" species, are tied to "real-life" exposures and show some consistency that is difficult to ignore. This assessment is tempered by the observation that given the weak magnitude of these increased risks, some other factor or common source of error could explain these findings. However, no consistent explanation other than exposure to ELF-EMF has been identified.*
>
> *Epidemiological studies have serious limitations in their ability to demonstrate a cause and effect relationship whereas laboratory studies, by design, can clearly show that cause and effect are possible. Virtually all of the laboratory evidence in animals and humans and most of the mechanistic work done in cells fail to support a causal relationship between exposure to ELF-EMF at environmental levels and changes in biological function or disease status. The lack of consistent, positive findings in animal or mechanistic studies weakens the belief that this association is actually due to ELF-EMF, but it cannot completely discount the epidemiological findings.*
> *The NIEHS concludes that ELF-EMF exposure cannot be recognized as entirely safe because of weak scientific evidence that exposure may pose a leukemia hazard. In our*

*opinion, this finding is insufficient to warrant aggressive regulatory concern. However, because virtually everyone in the United States uses electricity and therefore is routinely exposed to ELF-EMF, passive regulatory action is warranted such as a continued emphasis on educating both the public and the regulated community on means aimed at reducing exposures. The NIEHS does not believe that other cancers on non-cancer health outcomes provide sufficient evidence of a risk to currently warrant concern."*

More recently, an expert scientific working group of the Monographs Programme of the International Agency for Research on Cancer (IARC) released its findings from a review of health effects of static and ELF EMFs. IARC concluded that ELF magnetic fields are possibly carcinogenic to humans, based on consistent statistical associations of high level residential magnetic fields with a doubling of risk of childhood leukemia. However, IARC also concluded that children who are exposed to residential ELF magnetic fields less than 0.4 microTesla (4 milligauss)[1] have no increased risk of leukemia (IARC, 2001). To help put this in perspective, Table L-1 presents the average magnetic field exposures for clerical workers with and without computers.[2] As shown in the table, clerical workers with computers have increased average daily exposures of about 0.07 $\mu$T (0.7 mG) over clerical workers without computers. The average daily median for workers with computers is 0.12 $\mu$T (1.2 mG) and the exposure range is 0.05 to 0.45 $\mu$T (0.5 to 4.5 mG). Only the upper end of the exposure range exceeds the exposure level that IARC concluded has an increased risk of childhood leukemia (0.4 $\mu$T).

**Table L-3. Average magnetic field exposures for clerical workers***

| Type of worker | Average daily median ($\mu$T) | Exposure range ($\mu$T) |
|---|---|---|
| Clerical workers with computers | 0.12 | 0.05 to 0.45 |
| Clerical workers without computers | 0.05 | 0.02 to 0.2 |

Source: NIOSH Fact Sheet: EMFs in the Workplace
* The source does not give the distance at which measurements were taken. Monitor EMF emission measurements are often taken at a distance of 30 cm (approximately 12 inches) or 50 cm (approximately 20 inches).

In summary, no data were found on EMF measurements from LCDs. However, because of the lesser current requirements of LCDs compared to CRTs, it is assumed that LCDs also generate a lesser magnetic field. NIEHS has concluded that the evidence that ELF-EMF exposures pose any health risk is weak. However, since publication of the NIEHS report, IARC

[1]Magnetic field intensity is measured in units of tesla (T) or gauss (G). One tesla equals 10,000 gauss. Since most environmental EMF exposure involve magnetic field intensities that are only a fraction of a tesla or a gauss, they are commonly measured in units of microteslas ($\mu$T) or milligauss (mG). One $\mu$T is equal to 10 mG.

[2] Given the fact that desktop LCD monitors were only recently introduced into the marketplace, it is assumed that the computers used by clerical workers for whom measurements were taken were equipped with CRT monitors, although the data could also include clerical workers who used laptops with LCD displays.

has classified ELF-EMFs as possibly carcinogenic to humans. Based on the data in Table L-3, it appears most exposures to ELFs-EMFs from computer displays may be below the carcinogenicity concern level determined by IARC (0.4 $\mu$T).

## 2. ERGONOMIC ISSUES

Merriam-Webster's Online Dictionary defines ergonomics as "an applied science concerned with designing and arranging things people use so that the people and things interact most efficiently and safely – also called human engineering." While CRT and LCD desktop monitors are both usable in the same environments (in most cases), there are differences in their sizes and the way they present information to the user in their working environment. Thus the potential exists for there to be differences in the way a user might physically interact with their CRT or LCD monitor. (Note that Eye Strain is addressed as a separate issue in this Appendix [see L.3], and issues related to image generation on the monitor surface are addressed there.)

In reviewing several documents on ergonomics and the placement of computer monitors in or around a user's working area, some sources discuss the differences in using a CRT versus an LCD monitor. It is assumed in most discussions that the user is able to move/adjust the monitor to within a recommended operating position for use (e.g., eye-to-screen distance, vertical monitor location [with respect to horizontal eye level]). Thus, with unlimited resources within which to setup a computing environment, it is expected that only viewing angle would potentially favor a CRT over an LCD. CRTs provide a horizontal viewing angle of 180° whereas early-model LCD monitors were limited to an almost straight on view. The most recent LCDs on the market have a 120° capability (EIZO 1999). Although less than the CRT horizontal viewing angle, these current viewing angles significantly diminish the differences in viewing ability between the two monitor types. The reduced viewing angle of the LCD appears to mainly be a factor when presenting information to users who are viewing the screen from the side, such as during presentations to multiple users.

However, the user's environment is often limited by physical constraints on where the monitor can be placed and user seated. With this in mind, the physical size and footprint of the monitor becomes more of an ergonomics issue. In cases where the footprint of a monitor dictates that the monitor not go directly in-front of the user, but to either the left or right side, an increased level of ergonomic stress may be realized (typically neck twist) if the user is unable to adjust his or her seated position accordingly. Even the smaller footprint CRTs being manufactured today have a much larger footprint than those of closely-equivalent LCD monitors, typically occupying almost six times the depth of LCDs (IBM 1999). Additionally, some LCD monitors can be wall-mounted, almost completely removing the monitor from the desktop. Thus, it appears that the smaller footprint of the LCD may offer benefits in more easily positioning the monitor for optimum user use.

## 3. EYE STRAIN

There are numerous sensations that can be interpreted to be eye strain in the use of monitors, including but not limited to burning, tightness, sharp pains, dull pains, watering, blurring, double vision and headaches. Many of the principal factors that cause eye strain can be corrected or improved by adequately setting up the computing environment (e.g., controlling the distance between the eyes and the screen, wearing corrective lenses, if needed, etc.). Others can be improved by adjusting the controls on the monitor (e.g., setting brightness or contrast). Of the factors identified in this study, glare and screen flicker are the two that appear to be most affected by the technology choice (e.g., CRT or LCD).

The distance between your eyes and the monitor should be at least 25" (Ankrum 1996), and using a CRT versus an LCD should have no effect on the necessary distance needed to clearly see the monitor screen, as long as the user is using an appropriately sized resolution for his or her monitor size. Both CRTs and LCDs should be equally readable, not considering the viewing of an LCD from outside its particular viewing angle. If the brightness levels of a CRT and LCD are set appropriately, then the contrast between what is being looked at and its immediate environment should be no different for the two monitor types. Lastly, a user has to have good or corrected vision before either monitor will be useful.

The only notable difference between CRTs and LCDs with respect to glare is their flatness. As LCDs have completely flat monitor surfaces or screens, versus most CRTs which have rounded screens, they significantly reduce the probability of reflected glare from overhead or nearby lights. There are two main types of CRT tube technology, shadow mask and aperture grill. Shadow masks are utilized in older, less flat monitors, and aperture grills are utilized in the more current variations that have flatter outside faces (IBM 1999). Flatter screens provide less opportunity for the occurrence of reflected glare.

CRTs, especially older models, may be prone to screen flicker, which contributes significantly to eye strain. CRT's use phosphor that has been excited by an electron beam to create light. After the phosphor is excited, it begins to decay. The electron beam needs to return to the phosphor in a specific amount of time to keep the phosphor from decaying to the point that the human eye can perceive it. The rate at which the electron beam returns to any given phosphor is called the refresh rate. If the refresh rate is too low, the decaying of the phosphor may be perceptible to the human eye as a flickering screen image. Because LCDs do not use phosphors to create the image they do not have a refresh rate and do not flicker.

## REFERENCES

Ankrum, D. R. 1996. "Monitor Location: Guidelines for Monitor Placement and Lighting." Web site available at http://ur-net.com/office-ergo/setting.htm.

IARC (International Agency for Research on Cancer). 2001. "IARC Finds Limited Evidence that Residential Magnetic Fields Increase Risk of Childhood Leukemia." Press release accessed at http://www.iarc/fr/pageroot/preleases/pr136a.html on August 30, 2001. June 27.

NIEHS (National Institute of Environmental Health Sciences). 1999. *NIEHS Report on Health Effects from Exposure to Power-Line Frequency Electric and Magnetic Fields.* Available as a pdf document from the following Web site http://www.niehs.nih.gov/emfrapid/home.htm. May.

NIOSH (National Institute for Occupational Safety and Health), NIEHS, and DOE (Department of Energy). 1996. "Questions and Answers, EMF in the Workplace: Electric and Magnetic Fields Associated with the Use of Electric Power." Web site accessed at http://www.niehs.nih.gov/emfrapid/html/Q&A-Workplace.html. August 31, 2001. September.

NIOSH. Undated. "NIOSH Fact Sheet: EMFs in the Workplace." Web site accessed at http://www.cdc.gov/niosh/emf2.html. August 30, 2001.

NoRad. Undated. "Video Display Terminals as a Source of Electromagnetic Fields." Web site accessed at http://www.noradcorp.com.. August 31, 2001.

Poynton, C. 1997. "Reducing eyestrain from video and computer monitors." Web site available at http://www.inforamp.net/~poynton/notes/reducing_eyestrain/index.html.

# APPENDIX M

## LIFE-CYCLE IMPACT ASSESSMENT RESULTS

this page intentionally left blank

# APPENDIX M

# LIFE-CYCLE IMPACT ASSESSMENT RESULTS

## Table M-1. CRT LCIA Results for the Renewable Resource Use Impact Category

| Process Group | Material | LCI Data Type | Renewable Resource Use (kg) | % of Total |
|---|---|---|---|---|
| **Materials Processing Life-cycle Stage** | | | | |
| Steel Prod., cold-rolled, semi-finished | Water | secondary | 4.69e+02 | 3.57e+00 |
| Invar | Water | secondary | 3.96e+01 | 3.02e-01 |
| Lead | Water | secondary | 1.40e+01 | 1.07e-01 |
| Polycarbonate Production | Water | secondary | 1.30e+01 | 9.93e-02 |
| Ferrite mfg. | Water | secondary | 1.11e+01 | 8.46e-02 |
| ABS Production | Water | secondary | 3.94e+00 | 3.00e-02 |
| Styrene-butadiene Copolymer Prod. | Water | secondary | 2.58e+00 | 1.97e-02 |
| Polystyrene Prod., high-impact | Water | secondary | 8.16e-01 | 6.22e-03 |
| Polycarbonate Production | Sodium chloride (NaCl, in ground or in sea) | secondary | 7.30e-01 | 5.56e-03 |
| Steel Prod., cold-rolled, semi-finished | Limestone (CaCO3, in ground) | secondary | 6.72e-01 | 5.12e-03 |
| Aluminum Prod. | Limestone (CaCO3, in ground) | secondary | 9.25e-02 | 7.05e-04 |
| Lead | Limestone (CaCO3, in ground) | secondary | 6.63e-02 | 5.05e-04 |
| Lead | Sand (in ground) | secondary | 4.79e-02 | 3.65e-04 |
| Aluminum Prod. | Sodium chloride (NaCl, in ground or in sea) | secondary | 2.56e-02 | 1.95e-04 |
| Invar | Limestone (CaCO3, in ground) | secondary | 9.08e-03 | 6.91e-05 |
| ABS Production | Limestone (CaCO3, in ground) | secondary | 7.62e-03 | 5.80e-05 |
| Polycarbonate Production | Limestone (CaCO3, in ground) | secondary | 6.00e-03 | 4.57e-05 |
| Aluminum Prod. | Sand (in ground) | secondary | 5.26e-03 | 4.00e-05 |
| Polystyrene Prod., high-impact | Limestone (CaCO3, in ground) | secondary | 3.78e-03 | 2.88e-05 |
| Invar | Sand (in ground) | secondary | 3.67e-03 | 2.80e-05 |
| ABS Production | Gravel/Sand | secondary | 3.60e-03 | 2.74e-05 |
| Aluminum Prod. | Clay (in ground) | secondary | 2.79e-03 | 2.13e-05 |
| ABS Production | Sodium chloride (NaCl, in ground or in sea) | secondary | 2.63e-03 | 2.00e-05 |
| Steel Prod., cold-rolled, semi-finished | Gravel/Sand | secondary | 2.05e-03 | 1.56e-05 |
| Ferrite mfg. | Limestone (CaCO3, in ground) | secondary | 1.58e-03 | 1.21e-05 |
| Styrene-butadiene Copolymer Prod. | Sodium chloride (NaCl, in ground or in sea) | secondary | 1.16e-03 | 8.82e-06 |
| Styrene-butadiene Copolymer Prod. | Limestone (CaCO3, in ground) | secondary | 1.13e-03 | 8.63e-06 |
| Steel Prod., cold-rolled, semi-finished | Sodium chloride (NaCl, in ground or in sea) | secondary | 1.02e-03 | 7.74e-06 |
| Ferrite mfg. | Sand (in ground) | secondary | 9.35e-04 | 7.12e-06 |
| Invar | Clay (in ground) | secondary | 8.67e-04 | 6.60e-06 |
| Invar | Sodium chloride (NaCl, in ground or in sea) | secondary | 6.95e-04 | 5.29e-06 |
| Invar | Gravel/Sand | secondary | 5.91e-04 | 4.50e-06 |
| Ferrite mfg. | Gravel/Sand | secondary | 5.77e-04 | 4.39e-06 |
| Steel Prod., cold-rolled, semi-finished | Clay (in ground) | secondary | 4.45e-04 | 3.39e-06 |
| Polycarbonate Production | Sand (in ground) | secondary | 3.79e-04 | 2.88e-06 |
| Polystyrene Prod., high-impact | Sodium chloride (NaCl, in ground or in sea) | secondary | 3.17e-04 | 2.42e-06 |
| Ferrite mfg. | Sodium chloride (NaCl, in ground or in sea) | secondary | 2.65e-04 | 2.02e-06 |
| ABS Production | Sand (in ground) | secondary | 2.54e-04 | 1.93e-06 |
| Ferrite mfg. | Clay (in ground) | secondary | 1.91e-04 | 1.45e-06 |
| ABS Production | Clay (in ground) | secondary | 1.25e-04 | 9.55e-07 |
| Styrene-butadiene Copolymer Prod. | Sand (in ground) | secondary | 6.21e-05 | 4.73e-07 |
| Invar | Maize | secondary | 5.75e-05 | 4.38e-07 |

## Table M-1. CRT LCIA Results for the Renewable Resource Use Impact Category

| Process Group | Material | LCI Data Type | Renewable Resource Use (kg) | % of Total |
|---|---|---|---|---|
| Ferrite mfg. | Maize | secondary | 5.62e-05 | 4.28e-07 |
| Steel Prod., cold-rolled, semi-finished | Sand (in ground) | secondary | 5.34e-05 | 4.07e-07 |
| Polycarbonate Production | Clay (in ground) | secondary | 4.62e-05 | 3.52e-07 |
| Styrene-butadiene Copolymer Prod. | Clay (in ground) | secondary | 2.44e-05 | 1.86e-07 |
| Polystyrene Prod., high-impact | Sand (in ground) | secondary | 2.42e-05 | 1.84e-07 |
| Invar | Potatoes | secondary | 1.55e-05 | 1.18e-07 |
| Ferrite mfg. | Potatoes | secondary | 1.51e-05 | 1.15e-07 |
| Polycarbonate Production | Gravel/Sand | secondary | 2.77e-06 | 2.11e-08 |
| Styrene-butadiene Copolymer Prod. | Gravel/Sand | secondary | 8.27e-07 | 6.30e-09 |
| **Total Materials Processing** | | | **5.56e+02** | **4.23e+00** |
| **Manufacturing Life-cycle Stage** | | | | |
| LPG Production | Water, unspecified | secondary | 1.04e+04 | 7.94e+01 |
| CRT tube mfg. | Water | primary | 8.11e+02 | 6.18e+00 |
| Japanese Electric Grid | Water | model/secondary | 4.43e+01 | 3.37e-01 |
| PWB Mfg. | Water | model/secondary | 4.22e+01 | 3.21e-01 |
| Fuel Oil #6 Prod. | Water, unspecified | secondary | 3.56e+01 | 2.71e-01 |
| Glass/frit | Water | primary | 3.51e+01 | 2.67e-01 |
| Fuel Oil #2 Prod. | Water, unspecified | secondary | 2.93e+01 | 2.23e-01 |
| US electric grid | Water | model/secondary | 1.82e+01 | 1.38e-01 |
| Glass/frit | Sand | primary | 2.40e+00 | 1.83e-02 |
| Fuel Oil #4 Prod. | Water, unspecified | secondary | 2.39e+00 | 1.82e-02 |
| LPG Production | Limestone (CaCO3, in ground) | secondary | 1.06e+00 | 8.10e-03 |
| Natural Gas Prod. | Water | secondary | 2.12e-01 | 1.61e-03 |
| US electric grid | Limestone | model/secondary | 3.85e-02 | 2.93e-04 |
| Japanese Electric Grid | Limestone | model/secondary | 3.06e-02 | 2.33e-04 |
| LPG Production | Sand (in ground) | secondary | 2.72e-02 | 2.08e-04 |
| LPG Production | Sodium chloride (NaCl, in ground or in sea) | secondary | 1.25e-02 | 9.52e-05 |
| Fuel Oil #6 Prod. | Limestone (CaCO3, in ground) | secondary | 8.56e-03 | 6.52e-05 |
| Fuel Oil #2 Prod. | Limestone (CaCO3, in ground) | secondary | 3.34e-03 | 2.54e-05 |
| Natural Gas Prod. | Limestone (CaCO3, in ground) | secondary | 1.84e-03 | 1.40e-05 |
| Fuel Oil #4 Prod. | Limestone (CaCO3, in ground) | secondary | 3.55e-04 | 2.71e-06 |
| Fuel Oil #6 Prod. | Sand (in ground) | secondary | 9.22e-05 | 7.02e-07 |
| Fuel Oil #2 Prod. | Sand (in ground) | secondary | 7.65e-05 | 5.82e-07 |
| Fuel Oil #6 Prod. | Sodium chloride (NaCl, in ground or in sea) | secondary | 4.23e-05 | 3.22e-07 |
| Fuel Oil #2 Prod. | Sodium chloride (NaCl, in ground or in sea) | secondary | 3.51e-05 | 2.67e-07 |
| Fuel Oil #4 Prod. | Sand (in ground) | secondary | 6.21e-06 | 4.73e-08 |
| Fuel Oil #4 Prod. | Sodium chloride (NaCl, in ground or in sea) | secondary | 2.85e-06 | 2.17e-08 |
| Natural Gas Prod. | Sand (in ground) | secondary | 5.51e-07 | 4.19e-09 |
| Natural Gas Prod. | Sodium chloride (NaCl, in ground or in sea) | secondary | 2.53e-07 | 1.92e-09 |
| **Total Manufacturing** | | | **1.15e+04** | **8.72e+01** |
| **Use, Maintenance and Repair Life-cycle Stage** | | | | |
| US electric grid | Water | model/secondary | 1.14e+03 | 8.67e+00 |
| US electric grid | Limestone | model/secondary | 2.41e+00 | 1.83e-02 |
| **Total Use, Maintenance and Repair** | | | **1.14e+03** | **8.69e+00** |
| **End-of-life Life-cycle Stage** | | | | |
| CRT Incineration | Clay (in ground) | secondary | 4.24e+00 | 3.23e-02 |
| CRT landfilling | Clay (in ground) | primary | 3.95e+00 | 3.01e-02 |
| CRT Incineration | Sand (in ground) | secondary | 1.40e+00 | 1.07e-02 |
| CRT landfilling | Sand (in ground) | primary | 1.31e+00 | 9.97e-03 |
| US electric grid | Water | model/secondary | 1.14e-01 | 8.67e-04 |

## Table M-1. CRT LCIA Results for the Renewable Resource Use Impact Category

| Process Group | Material | LCI Data Type | Renewable Resource Use (kg) | % of Total |
|---|---|---|---|---|
| LPG Production | Water, unspecified | secondary | 9.00e-02 | 6.86e-04 |
| CRT landfilling | Limestone (CaCO3, in ground) | primary | 6.32e-04 | 4.81e-06 |
| US electric grid | Limestone | model/secondary | 2.41e-04 | 1.84e-06 |
| LPG Production | Limestone (CaCO3, in ground) | secondary | 9.18e-06 | 6.99e-08 |
| LPG Production | Sand (in ground) | secondary | 2.35e-07 | 1.79e-09 |
| LPG Production | Sodium chloride (NaCl, in ground or in sea) | secondary | 1.08e-07 | 8.22e-10 |
| Natural Gas Prod. | Sodium chloride (NaCl, in ground or in sea) | secondary | -1.27e-07 | -9.65e-10 |
| Natural Gas Prod. | Sand (in ground) | secondary | -2.76e-07 | -2.10e-09 |
| Fuel Oil #4 Prod. | Sodium chloride (NaCl, in ground or in sea) | secondary | -3.06e-05 | -2.33e-07 |
| Fuel Oil #4 Prod. | Sand (in ground) | secondary | -6.68e-05 | -5.09e-07 |
| Natural Gas Prod. | Limestone (CaCO3, in ground) | secondary | -9.22e-04 | -7.02e-06 |
| Fuel Oil #4 Prod. | Limestone (CaCO3, in ground) | secondary | -3.82e-03 | -2.91e-05 |
| Natural Gas Prod. | Water | secondary | -1.06e-01 | -8.09e-04 |
| CRT Incineration | Limestone (CaCO3, in ground) | secondary | -2.35e-01 | -1.79e-03 |
| CRT Incineration | Water | secondary | -1.73e+00 | -1.32e-02 |
| Fuel Oil #4 Prod. | Water, unspecified | secondary | -2.57e+01 | -1.95e-01 |
| **Total End-of-Life** | | | **-1.66e+01** | **-1.27e-01** |
| **Total All Life-cycle Stages** | | | **1.31e+04** | **1.00e+02** |

## Table M-2. LCD LCIA Results for the Renewable Resource Use Impact Category

| Process Group | Material | LCI Data Type | Renewable Resource Use (kg) | % of Total |
|---|---|---|---|---|
| **Materials Processing Life-cycle Stage** | | | | |
| Steel Prod., cold-rolled, semi-finished | Water | secondary | 2.30e+02 | 8.21e+00 |
| Natural Gas Prod. | Water | secondary | 1.48e+01 | 5.29e-01 |
| PMMA Sheet Prod. | Water | secondary | 8.86e+00 | 3.17e-01 |
| Polycarbonate Production | Water | secondary | 7.28e+00 | 2.60e-01 |
| Styrene-butadiene Copolymer Prod. | Water | secondary | 1.13e+00 | 4.03e-02 |
| PET Resin Production | Water | secondary | 8.19e-01 | 2.92e-02 |
| Polycarbonate Production | Sodium chloride (NaCl, in ground or in sea) | secondary | 4.07e-01 | 1.46e-02 |
| Steel Prod., cold-rolled, semi-finished | Limestone (CaCO3, in ground) | secondary | 3.29e-01 | 1.18e-02 |
| Natural Gas Prod. | Limestone (CaCO3, in ground) | secondary | 1.28e-01 | 4.59e-03 |
| Aluminum Prod. | Limestone (CaCO3, in ground) | secondary | 3.44e-02 | 1.23e-03 |
| PMMA Sheet Prod. | Sodium chloride (NaCl, in ground or in sea) | secondary | 1.92e-02 | 6.85e-04 |
| Aluminum Prod. | Sodium chloride (NaCl, in ground or in sea) | secondary | 9.54e-03 | 3.41e-04 |
| PMMA Sheet Prod. | Limestone (CaCO3, in ground) | secondary | 8.44e-03 | 3.01e-04 |
| PMMA Sheet Prod. | Sand (in ground) | secondary | 7.29e-03 | 2.60e-04 |
| Polycarbonate Production | Limestone (CaCO3, in ground) | secondary | 3.35e-03 | 1.20e-04 |
| Aluminum Prod. | Sand (in ground) | secondary | 1.96e-03 | 6.99e-05 |
| PET Resin Production | Limestone (CaCO3, in ground) | secondary | 1.91e-03 | 6.81e-05 |
| Aluminum Prod. | Clay (in ground) | secondary | 1.04e-03 | 3.71e-05 |
| Steel Prod., cold-rolled, semi-finished | Gravel/Sand | secondary | 1.01e-03 | 3.60e-05 |
| Styrene-butadiene Copolymer Prod. | Sodium chloride (NaCl, in ground or in sea) | secondary | 5.06e-04 | 1.81e-05 |
| Steel Prod., cold-rolled, semi-finished | Sodium chloride (NaCl, in ground or in sea) | secondary | 4.98e-04 | 1.78e-05 |
| Styrene-butadiene Copolymer Prod. | Limestone (CaCO3, in ground) | secondary | 4.96e-04 | 1.77e-05 |
| Steel Prod., cold-rolled, semi-finished | Clay (in ground) | secondary | 2.18e-04 | 7.78e-06 |
| Polycarbonate Production | Sand (in ground) | secondary | 2.11e-04 | 7.55e-06 |
| PET Resin Production | Sodium chloride (NaCl, in ground or in sea) | secondary | 1.27e-04 | 4.54e-06 |
| Natural Gas Prod. | Sand (in ground) | secondary | 3.85e-05 | 1.37e-06 |
| Styrene-butadiene Copolymer Prod. | Sand (in ground) | secondary | 2.71e-05 | 9.69e-07 |
| Steel Prod., cold-rolled, semi-finished | Sand (in ground) | secondary | 2.62e-05 | 9.35e-07 |
| Polycarbonate Production | Clay (in ground) | secondary | 2.58e-05 | 9.21e-07 |
| Natural Gas Prod. | Sodium chloride (NaCl, in ground or in sea) | secondary | 1.77e-05 | 6.30e-07 |
| Styrene-butadiene Copolymer Prod. | Clay (in ground) | secondary | 1.07e-05 | 3.81e-07 |
| PET Resin Production | Sand (in ground) | secondary | 5.81e-06 | 2.07e-07 |
| PMMA Sheet Prod. | Clay (in ground) | secondary | 4.60e-06 | 1.64e-07 |
| Polycarbonate Production | Gravel/Sand | secondary | 1.55e-06 | 5.53e-08 |
| PMMA Sheet Prod. | Gravel/Sand | secondary | 1.15e-06 | 4.11e-08 |
| Styrene-butadiene Copolymer Prod. | Gravel/Sand | secondary | 3.62e-07 | 1.29e-08 |
| PET Resin Production | Clay (in ground) | secondary | 9.08e-08 | 3.24e-09 |
| PET Resin Production | Gravel | secondary | 9.08e-08 | 3.24e-09 |
| **Total Materials Processing** | | | **2.64e+02** | **9.42e+00** |
| **Manufacturing Life-cycle Stage** | | | | |
| Monitor/module | Water | primary | 1.08e+03 | 3.85e+01 |
| LPG Production | Water, unspecified | secondary | 5.00e+02 | 1.79e+01 |
| Panel components | Water | primary | 1.79e+02 | 6.38e+00 |
| Backlight | Water | primary | 1.67e+02 | 5.95e+00 |
| Japanese Electric Grid | Water | model/secondary | 1.49e+02 | 5.32e+00 |
| Backlight | Water | primary | 2.16e+01 | 7.70e-01 |
| PWB Mfg. | Water | model/secondary | 1.86e+01 | 6.64e-01 |
| Backlight | Water | primary | 3.76e+00 | 1.34e-01 |
| Fuel Oil #4 Prod. | Water, unspecified | secondary | 3.68e+00 | 1.31e-01 |

## Table M-2. LCD LCIA Results for the Renewable Resource Use Impact Category

| Process Group | Material | LCI Data Type | Renewable Resource Use (kg) | % of Total |
|---|---|---|---|---|
| US electric grid | Water | model/secondary | 2.20e+00 | 7.87e-02 |
| LCD glass mfg. | Water | primary | 1.62e+00 | 5.80e-02 |
| Fuel Oil #2 Prod. | Water, unspecified | secondary | 1.37e+00 | 4.88e-02 |
| Fuel Oil #6 Prod. | Water, unspecified | secondary | 1.21e+00 | 4.33e-02 |
| Natural Gas Prod. | Water | secondary | 3.34e-01 | 1.19e-02 |
| Panel components | Water | primary | 3.03e-01 | 1.08e-02 |
| Panel components | Water | primary | 2.01e-01 | 7.19e-03 |
| LCD glass mfg. | Sand | primary | 1.11e-01 | 3.97e-03 |
| Japanese Electric Grid | Limestone | model/secondary | 1.03e-01 | 3.68e-03 |
| LPG Production | Limestone (CaCO3, in ground) | secondary | 5.10e-02 | 1.82e-03 |
| US electric grid | Limestone | model/secondary | 4.66e-03 | 1.67e-04 |
| Natural Gas Prod. | Limestone (CaCO3, in ground) | secondary | 2.90e-03 | 1.04e-04 |
| LPG Production | Sand (in ground) | secondary | 1.31e-03 | 4.67e-05 |
| LPG Production | Sodium chloride (NaCl, in ground or in sea) | secondary | 6.00e-04 | 2.14e-05 |
| Fuel Oil #4 Prod. | Limestone (CaCO3, in ground) | secondary | 5.48e-04 | 1.96e-05 |
| Fuel Oil #6 Prod. | Limestone (CaCO3, in ground) | secondary | 2.92e-04 | 1.04e-05 |
| Fuel Oil #2 Prod. | Limestone (CaCO3, in ground) | secondary | 1.56e-04 | 5.56e-06 |
| Fuel Oil #4 Prod. | Sand (in ground) | secondary | 9.58e-06 | 3.42e-07 |
| Fuel Oil #4 Prod. | Sodium chloride (NaCl, in ground or in sea) | secondary | 4.39e-06 | 1.57e-07 |
| Fuel Oil #2 Prod. | Sand (in ground) | secondary | 3.57e-06 | 1.27e-07 |
| Fuel Oil #6 Prod. | Sand (in ground) | secondary | 3.14e-06 | 1.12e-07 |
| Fuel Oil #2 Prod. | Sodium chloride (NaCl, in ground or in sea) | secondary | 1.64e-06 | 5.85e-08 |
| Fuel Oil #6 Prod. | Sodium chloride (NaCl, in ground or in sea) | secondary | 1.44e-06 | 5.14e-08 |
| Natural Gas Prod. | Sand (in ground) | secondary | 8.68e-07 | 3.10e-08 |
| Natural Gas Prod. | Sodium chloride (NaCl, in ground or in sea) | secondary | 3.98e-07 | 1.42e-08 |
| **Total Manufacturing** | | | **2.13e+03** | **7.59e+01** |
| **Use, Maintenance and Repair Life-cycle Stage** | | | | |
| US electric grid | Water | model/secondary | 4.25e+02 | 1.52e+01 |
| US electric grid | Limestone | model/secondary | 8.99e-01 | 3.21e-02 |
| **Total Use, Maintenance, and Repair** | | | **4.26e+02** | **1.52e+01** |
| **End-of-life Life-cycle Stage** | | | | |
| LCD landfilling | Clay (in ground) | primary | 9.52e-01 | 3.40e-02 |
| LCD incineration | Clay (in ground) | secondary | 7.38e-01 | 2.64e-02 |
| LCD landfilling | Sand (in ground) | primary | 3.15e-01 | 1.13e-02 |
| LCD incineration | Sand (in ground) | secondary | 2.45e-01 | 8.73e-03 |
| US electric grid | Water | model/secondary | 8.06e-02 | 2.88e-03 |
| LPG Production | Water, unspecified | secondary | 4.11e-02 | 1.47e-03 |
| US electric grid | Limestone | model/secondary | 1.71e-04 | 6.09e-06 |
| LCD landfilling | Limestone (CaCO3, in ground) | primary | 1.52e-04 | 5.44e-06 |
| LCD landfilling | Sodium chloride (NaCl, in ground or in sea) | primary | 1.82e-05 | 6.50e-07 |
| LCD incineration | Sodium chloride (NaCl, in ground or in sea) | secondary | 1.28e-05 | 4.59e-07 |
| LPG Production | Limestone (CaCO3, in ground) | secondary | 4.19e-06 | 1.50e-07 |
| LPG Production | Sand (in ground) | secondary | 1.07e-07 | 3.83e-09 |
| LPG Production | Sodium chloride (NaCl, in ground or in sea) | secondary | 4.92e-08 | 1.76e-09 |
| Natural Gas Prod. | Sodium chloride (NaCl, in ground or in sea) | secondary | -8.37e-08 | -2.99e-09 |
| Natural Gas Prod. | Sand (in ground) | secondary | -1.82e-07 | -6.51e-09 |
| Fuel Oil #4 Prod. | Sodium chloride (NaCl, in ground or in sea) | secondary | -2.02e-05 | -7.23e-07 |
| Fuel Oil #4 Prod. | Sand (in ground) | secondary | -4.41e-05 | -1.58e-06 |
| Natural Gas Prod. | Limestone (CaCO3, in ground) | secondary | -6.09e-04 | -2.17e-05 |

## Table M-2. LCD LCIA Results for the Renewable Resource Use Impact Category

| Process Group | Material | LCI Data Type | Renewable Resource Use (kg) | % of Total |
|---|---|---|---|---|
| Fuel Oil #4 Prod. | Limestone (CaCO3, in ground) | secondary | -2.52e-03 | -9.01e-05 |
| Natural Gas Prod. | Water | secondary | -7.02e-02 | -2.51e-03 |
| LCD incineration | Limestone (CaCO3, in ground) | secondary | -1.52e-01 | -5.44e-03 |
| LCD incineration | Water | secondary | -1.12e+00 | -4.01e-02 |
| Fuel Oil #4 Prod. | Water, unspecified | secondary | -1.69e+01 | -6.05e-01 |
| **Total End-of-life** | | | **-1.59e+01** | **-5.68e-01** |
| **Total All Life-cycle Stages** | | | **2.80e+03** | **1.00e+02** |

## Table M-3. CRT LCIA Results for the Nonrenewable Resource Use Impact Category

| Process Group | Material | LCI Data Type | Nonrenewable Resource Use (kg) | % of Total |
|---|---|---|---|---|
| **Materials Processing Life-cycle Stage** | | | | |
| Steel Prod., cold-rolled, semi-finished | Iron (Fe, ore) | secondary | 6.65e+00 | 9.95e-01 |
| Steel Prod., cold-rolled, semi-finished | Coal, average (in ground) | secondary | 3.98e+00 | 5.96e-01 |
| Aluminum Prod. | Bauxite (Al2O3, ore) | secondary | 1.37e+00 | 2.05e-01 |
| Polycarbonate Production | Natural gas (in ground) | secondary | 1.29e+00 | 1.92e-01 |
| Styrene-butadiene Copolymer Prod. | Petroleum (in ground) | secondary | 1.03e+00 | 1.54e-01 |
| Aluminum Prod. | Coal, average (in ground) | secondary | 9.83e-01 | 1.47e-01 |
| Lead | Lead (Pb, ore) | secondary | 4.96e-01 | 7.42e-02 |
| Steel Prod., cold-rolled, semi-finished | Petroleum (in ground) | secondary | 4.89e-01 | 7.32e-02 |
| Aluminum Prod. | Petroleum (in ground) | secondary | 4.64e-01 | 6.95e-02 |
| Steel Prod., cold-rolled, semi-finished | Natural gas (in ground) | secondary | 4.58e-01 | 6.86e-02 |
| ABS Production | Natural gas (in ground) | secondary | 4.42e-01 | 6.62e-02 |
| Polycarbonate Production | Petroleum (in ground) | secondary | 4.34e-01 | 6.49e-02 |
| Styrene-butadiene Copolymer Prod. | Natural gas (in ground) | secondary | 4.30e-01 | 6.44e-02 |
| Steel Prod., cold-rolled, semi-finished | Coal, lignite (in ground) | secondary | 4.16e-01 | 6.23e-02 |
| Polycarbonate Production | Coal, average (in ground) | secondary | 3.90e-01 | 5.85e-02 |
| Invar | Petroleum (in ground) | secondary | 3.70e-01 | 5.55e-02 |
| Invar | Natural gas (in ground) | secondary | 3.51e-01 | 5.25e-02 |
| ABS Production | Petroleum (in ground) | secondary | 2.98e-01 | 4.45e-02 |
| Lead | Coal, average (in ground) | secondary | 2.88e-01 | 4.30e-02 |
| Invar | Iron (Fe, ore) | secondary | 2.52e-01 | 3.77e-02 |
| Polycarbonate Production | Coal, lignite (in ground) | secondary | 2.46e-01 | 3.69e-02 |
| Ferrite mfg. | Iron ore | secondary | 2.37e-01 | 3.55e-02 |
| Aluminum Prod. | Natural gas (in ground) | secondary | 2.14e-01 | 3.20e-02 |
| Aluminum Prod. | Coal, lignite (in ground) | secondary | 1.83e-01 | 2.73e-02 |
| Ferrite mfg. | Coal, average (in ground) | secondary | 1.74e-01 | 2.60e-02 |
| Lead | Natural gas (in ground) | secondary | 1.56e-01 | 2.34e-02 |
| Polystyrene Prod., high-impact | Natural gas (in ground) | secondary | 1.39e-01 | 2.08e-02 |
| Ferrite mfg. | Coal, lignite (in ground) | secondary | 1.28e-01 | 1.92e-02 |
| Ferrite mfg. | Natural gas (in ground) | secondary | 1.24e-01 | 1.85e-02 |
| Polystyrene Prod., high-impact | Petroleum (in ground) | secondary | 1.18e-01 | 1.76e-02 |
| Aluminum Prod. | Pyrite (FeS2, ore) | secondary | 1.01e-01 | 1.51e-02 |
| Invar | Nickel (Ni, ore) | secondary | 9.80e-02 | 1.47e-02 |
| Lead | Petroleum (in ground) | secondary | 8.74e-02 | 1.31e-02 |
| Lead | Iron (Fe, ore) | secondary | 5.30e-02 | 7.93e-03 |
| Lead | Pyrite (FeS2, ore) | secondary | 5.09e-02 | 7.62e-03 |
| Ferrite mfg. | Petroleum (in ground) | secondary | 4.90e-02 | 7.34e-03 |
| Invar | Pyrite (FeS2, ore) | secondary | 3.94e-02 | 5.89e-03 |
| Steel Prod., cold-rolled, semi-finished | Tin (Sn, ore) | secondary | 2.43e-02 | 3.64e-03 |
| Invar | Zinc (Zn, ore) | secondary | 1.92e-02 | 2.87e-03 |
| Ferrite mfg. | Zinc (Zn, ore) | secondary | 1.87e-02 | 2.80e-03 |
| Aluminum Prod. | Iron (Fe, ore) | secondary | 1.75e-02 | 2.62e-03 |
| ABS Production | Talcum (ore) | secondary | 8.89e-03 | 1.33e-03 |
| Steel Prod., cold-rolled, semi-finished | Raw materials (unspecified) | secondary | 7.11e-03 | 1.06e-03 |
| Polycarbonate Production | Sulfur (S, in ground) | secondary | 5.31e-03 | 7.95e-04 |
| Ferrite mfg. | Pyrite (FeS2, ore) | secondary | 2.19e-03 | 3.27e-04 |
| ABS Production | Potassium chloride (KCl, as K2O, in ground) | secondary | 1.91e-03 | 2.85e-04 |
| Polycarbonate Production | Bentonite (in ground) | secondary | 1.29e-03 | 1.94e-04 |
| Invar | Barium sulfate (BaSO4, in ground) | secondary | 1.10e-03 | 1.65e-04 |

## Table M-3. CRT LCIA Results for the Nonrenewable Resource Use Impact Category

| Process Group | Material | LCI Data Type | Nonrenewable Resource Use (kg) | % of Total |
|---|---|---|---|---|
| Polycarbonate Production | Iron (Fe, ore) | secondary | 8.68e-04 | 1.30e-04 |
| Aluminum Prod. | Copper (Cu, ore) | secondary | 7.06e-04 | 1.06e-04 |
| Aluminum Prod. | Bentonite (in ground) | secondary | 6.62e-04 | 9.92e-05 |
| Styrene-butadiene Copolymer Prod. | Iron (Fe, ore) | secondary | 5.83e-04 | 8.73e-05 |
| Invar | Raw materials (unspecified) | secondary | 5.29e-04 | 7.91e-05 |
| Invar | Bauxite (Al2O3, ore) | secondary | 5.27e-04 | 7.90e-05 |
| Ferrite mfg. | Raw materials (unspecified) | secondary | 5.16e-04 | 7.72e-05 |
| Styrene-butadiene Copolymer Prod. | Bauxite | secondary | 4.80e-04 | 7.19e-05 |
| ABS Production | Iron (Fe, ore) | secondary | 3.81e-04 | 5.71e-05 |
| Invar | Bentonite (in ground) | secondary | 3.24e-04 | 4.85e-05 |
| Steel Prod., cold-rolled, semi-finished | Pyrite (FeS2, ore) | secondary | 3.04e-04 | 4.55e-05 |
| Polycarbonate Production | Bauxite (Al2O3, ore) | secondary | 2.77e-04 | 4.15e-05 |
| ABS Production | Bauxite (Al2O3, ore) | secondary | 2.54e-04 | 3.80e-05 |
| Invar | Copper (Cu, ore) | secondary | 1.61e-04 | 2.41e-05 |
| Polystyrene Prod., high-impact | Bauxite | secondary | 1.51e-04 | 2.26e-05 |
| Polystyrene Prod., high-impact | Iron ore | secondary | 1.27e-04 | 1.90e-05 |
| ABS Production | Bentonite (in ground) | secondary | 8.47e-05 | 1.27e-05 |
| Styrene-butadiene Copolymer Prod. | Sulfur (S, in ground) | secondary | 8.15e-05 | 1.22e-05 |
| Aluminum Prod. | Lead (Pb, ore) | secondary | 6.30e-05 | 9.43e-06 |
| Styrene-butadiene Copolymer Prod. | Bentonite (in ground) | secondary | 5.79e-05 | 8.67e-06 |
| Steel Prod., cold-rolled, semi-finished | Uranium (U, ore) | secondary | 4.27e-05 | 6.39e-06 |
| Ferrite mfg. | Bentonite (in ground) | secondary | 3.82e-05 | 5.72e-06 |
| Ferrite mfg. | Bauxite (Al2O3, ore) | secondary | 3.37e-05 | 5.05e-06 |
| Polycarbonate Production | Uranium (U, ore) | secondary | 3.13e-05 | 4.68e-06 |
| Aluminum Prod. | Uranium (U, ore) | secondary | 2.86e-05 | 4.28e-06 |
| Steel Prod., cold-rolled, semi-finished | Bentonite (in ground) | secondary | 1.79e-05 | 2.68e-06 |
| Steel Prod., cold-rolled, semi-finished | Iron sulfate (FeSO4, ore) | secondary | 1.63e-05 | 2.44e-06 |
| Polycarbonate Production | Calcium sulfate (CaSO4, ore) | secondary | 1.29e-05 | 1.94e-06 |
| Ferrite mfg. | Uranium (U, ore) | secondary | 1.23e-05 | 1.85e-06 |
| Steel Prod., cold-rolled, semi-finished | Bauxite (Al2O3, ore) | secondary | 1.18e-05 | 1.77e-06 |
| Polycarbonate Production | Dolomite (in ground) | secondary | 9.23e-06 | 1.38e-06 |
| Styrene-butadiene Copolymer Prod. | Potassium chloride (KCl, as K2O, in ground) | secondary | 8.69e-06 | 1.30e-06 |
| Polycarbonate Production | Olivine ore | secondary | 7.39e-06 | 1.11e-06 |
| Lead | Uranium (U, ore) | secondary | 6.08e-06 | 9.10e-07 |
| Styrene-butadiene Copolymer Prod. | Calcium sulfate (CaSO4, ore) | secondary | 5.79e-06 | 8.67e-07 |
| Polycarbonate Production | Potassium chloride (KCl, as K2O, in ground) | secondary | 5.54e-06 | 8.29e-07 |
| Invar | Iron sulfate (FeSO4, ore) | secondary | 4.68e-06 | 7.01e-07 |
| Ferrite mfg. | Iron sulfate (FeSO4, ore) | secondary | 4.57e-06 | 6.84e-07 |
| Invar | Calcium sulfate (CaSO4, ore) | secondary | 4.32e-06 | 6.47e-07 |
| ABS Production | Dolomite (in ground) | secondary | 4.24e-06 | 6.34e-07 |
| ABS Production | Olivine ore | secondary | 3.39e-06 | 5.07e-07 |
| Styrene-butadiene Copolymer Prod. | Dolomite (in ground) | secondary | 2.48e-06 | 3.72e-07 |
| Polycarbonate Production | Lead (Pb, ore) | secondary | 1.85e-06 | 2.76e-07 |
| ABS Production | Fluorspar (CaF2, ore) | secondary | 1.69e-06 | 2.54e-07 |
| Styrene-butadiene Copolymer Prod. | Olivine ore | secondary | 1.65e-06 | 2.48e-07 |
| Invar | Sulfur (S, in ground) | secondary | 1.62e-06 | 2.42e-07 |
| Ferrite mfg. | Sulfur (S, in ground) | secondary | 1.58e-06 | 2.37e-07 |
| Invar | Borax | secondary | 2.63e-07 | 3.94e-08 |
| Ferrite mfg. | Borax | secondary | 2.57e-07 | 3.85e-08 |
| Steel Prod., cold-rolled, semi-finished | Copper (Cu, ore) | secondary | 1.86e-07 | 2.78e-08 |
| Ferrite mfg. | Copper (Cu, ore) | secondary | 1.82e-07 | 2.73e-08 |

## Table M-3. CRT LCIA Results for the Nonrenewable Resource Use Impact Category

| Process Group | Material | LCI Data Type | Nonrenewable Resource Use (kg) | % of Total |
|---|---|---|---|---|
| Invar | Lead (Pb, ore) | secondary | 5.84e-08 | 8.74e-09 |
| Steel Prod., cold-rolled, semi-finished | Lead (Pb, ore) | secondary | 5.79e-08 | 8.67e-09 |
| Ferrite mfg. | Lead (Pb, ore) | secondary | 5.70e-08 | 8.53e-09 |
| Invar | Chromium ore | secondary | 3.67e-08 | 5.50e-09 |
| Steel Prod., cold-rolled, semi-finished | Chromium ore | secondary | 3.65e-08 | 5.46e-09 |
| Ferrite mfg. | Chromium ore | secondary | 3.59e-08 | 5.37e-09 |
| Invar | Manganese (Mn, ore) | secondary | 2.14e-08 | 3.20e-09 |
| Steel Prod., cold-rolled, semi-finished | Manganese (Mn, ore) | secondary | 2.13e-08 | 3.18e-09 |
| Ferrite mfg. | Manganese (Mn, ore) | secondary | 2.09e-08 | 3.13e-09 |
| Steel Prod., cold-rolled, semi-finished | Nickel (Ni, ore) | secondary | 1.24e-08 | 1.85e-09 |
| Ferrite mfg. | Nickel (Ni, ore) | secondary | 1.21e-08 | 1.82e-09 |
| Steel Prod., cold-rolled, semi-finished | Zinc (Zn, ore) | secondary | 1.35e-09 | 2.02e-10 |
| Invar | Silver (Ag, ore) | secondary | 9.27e-10 | 1.39e-10 |
| Steel Prod., cold-rolled, semi-finished | Silver (Ag, ore) | secondary | 9.20e-10 | 1.38e-10 |
| Ferrite mfg. | Silver (Ag, ore) | secondary | 9.05e-10 | 1.35e-10 |
| Invar | Dolomite | secondary | 7.26e-11 | 1.09e-11 |
| Ferrite mfg. | Dolomite | secondary | 7.08e-11 | 1.06e-11 |
| Invar | Olivine | secondary | 5.44e-11 | 8.15e-12 |
| Ferrite mfg. | Olivine | secondary | 5.31e-11 | 7.95e-12 |
| **Total Materials Processing** | | | 2.32e+01 | 3.47e+00 |
| **Manufacturing Life-cycle Stage** | | | | |
| LPG Production | Petroleum (in ground) | secondary | 3.75e+02 | 5.61e+01 |
| LPG Production | Natural gas (in ground) | secondary | 4.51e+01 | 6.75e+00 |
| LPG Production | Coal, average (in ground) | secondary | 1.34e+01 | 2.01e+00 |
| Fuel Oil #6 Prod. | Petroleum (in ground) | secondary | 3.88e+00 | 5.81e-01 |
| Natural Gas Prod. | Natural gas (in ground) | secondary | 3.40e+00 | 5.09e-01 |
| US electric grid | Coal, average (in ground) | model/secondary | 2.86e+00 | 4.29e-01 |
| Japanese Electric Grid | Coal, average (in ground) | model/secondary | 2.28e+00 | 3.42e-01 |
| Japanese Electric Grid | Petroleum (in ground) | model/secondary | 1.29e+00 | 1.93e-01 |
| Japanese Electric Grid | Natural gas | model/secondary | 1.25e+00 | 1.87e-01 |
| Fuel Oil #2 Prod. | Petroleum (in ground) | secondary | 1.24e+00 | 1.85e-01 |
| Glass/frit | Lead | primary | 4.47e-01 | 6.70e-02 |
| Fuel Oil #6 Prod. | Natural gas (in ground) | secondary | 2.88e-01 | 4.31e-02 |
| US electric grid | Natural gas | model/secondary | 2.23e-01 | 3.34e-02 |
| Fuel Oil #4 Prod. | Petroleum (in ground) | secondary | 1.47e-01 | 2.19e-02 |
| Fuel Oil #2 Prod. | Natural gas (in ground) | secondary | 1.36e-01 | 2.04e-02 |
| Fuel Oil #6 Prod. | Coal, average (in ground) | secondary | 1.08e-01 | 1.62e-02 |
| US electric grid | Petroleum (in ground) | model/secondary | 6.07e-02 | 9.08e-03 |
| Glass/frit | Lead | primary | 4.67e-02 | 6.99e-03 |
| LPG Production | Bauxite (Al2O3, ore) | secondary | 4.45e-02 | 6.66e-03 |
| Fuel Oil #2 Prod. | Coal, average (in ground) | secondary | 4.21e-02 | 6.30e-03 |
| Natural Gas Prod. | Coal, average (in ground) | secondary | 2.33e-02 | 3.49e-03 |
| Fuel Oil #4 Prod. | Natural gas (in ground) | secondary | 1.34e-02 | 2.00e-03 |
| Natural Gas Prod. | Petroleum (in ground) | secondary | 8.39e-03 | 1.26e-03 |
| Glass/frit | Borax | primary | 8.00e-03 | 1.20e-03 |
| Glass/frit | Silica | primary | 5.33e-03 | 7.98e-04 |
| Japanese Electric Grid | Uranium, yellowcake | model/secondary | 3.04e-04 | 4.55e-05 |
| LPG Production | Uranium (U, ore) | secondary | 2.26e-04 | 3.38e-05 |
| Fuel Oil #6 Prod. | Bauxite (Al2O3, ore) | secondary | 1.50e-04 | 2.25e-05 |

## Table M-3. CRT LCIA Results for the Nonrenewable Resource Use Impact Category

| Process Group | Material | LCI Data Type | Nonrenewable Resource Use (kg) | % of Total |
|---|---|---|---|---|
| Fuel Oil #2 Prod. | Bauxite (Al2O3, ore) | secondary | 1.25e-04 | 1.87e-05 |
| US electric grid | Uranium, yellowcake | model/secondary | 7.74e-05 | 1.16e-05 |
| Fuel Oil #4 Prod. | Bauxite (Al2O3, ore) | secondary | 1.01e-05 | 1.52e-06 |
| Fuel Oil #6 Prod. | Uranium (U, ore) | secondary | 1.82e-06 | 2.73e-07 |
| Natural Gas Prod. | Bauxite (Al2O3, ore) | secondary | 8.99e-07 | 1.35e-07 |
| Fuel Oil #2 Prod. | Uranium (U, ore) | secondary | 7.08e-07 | 1.06e-07 |
| Natural Gas Prod. | Uranium (U, ore) | secondary | 4.00e-07 | 5.99e-08 |
| **Total Manufacturing** | | | **4.51e+02** | **6.75e+01** |
| **Use, Maintenance and Repair Life-cycle Stage** | | | | |
| US electric grid | Coal, average (in ground) | model/secondary | 1.79e+02 | 2.69e+01 |
| US electric grid | Natural gas | model/secondary | 1.40e+01 | 2.09e+00 |
| US electric grid | Petroleum (in ground) | model/secondary | 3.80e+00 | 5.69e-01 |
| US electric grid | Uranium, yellowcake | model/secondary | 4.85e-03 | 7.26e-04 |
| **Total Use, Maintenance and Repair** | | | **1.97e+02** | **2.95e+01** |
| **End-of-life Life-cycle Stage** | | | | |
| CRT landfilling | Oil (in ground) | primary | 3.35e-02 | 5.01e-03 |
| US electric grid | Coal, average (in ground) | model/secondary | 1.79e-02 | 2.69e-03 |
| CRT landfilling | Natural gas (in ground) | primary | 4.52e-03 | 6.76e-04 |
| LPG Production | Petroleum (in ground) | secondary | 3.24e-03 | 4.84e-04 |
| CRT landfilling | Coal, average (in ground) | primary | 3.06e-03 | 4.59e-04 |
| CRT Incineration | Iron (Fe, ore) | secondary | 1.76e-03 | 2.64e-04 |
| CRT landfilling | Iron (Fe, ore) | primary | 1.65e-03 | 2.46e-04 |
| US electric grid | Natural gas | model/secondary | 1.40e-03 | 2.10e-04 |
| LPG Production | Natural gas (in ground) | secondary | 3.89e-04 | 5.82e-05 |
| US electric grid | Petroleum (in ground) | model/secondary | 3.80e-04 | 5.69e-05 |
| LPG Production | Coal, average (in ground) | secondary | 1.16e-04 | 1.73e-05 |
| CRT landfilling | Bauxite (Al2O3, ore) | primary | 8.81e-07 | 1.32e-07 |
| US electric grid | Uranium, yellowcake | model/secondary | 4.85e-07 | 7.27e-08 |
| LPG Production | Bauxite (Al2O3, ore) | secondary | 3.84e-07 | 5.75e-08 |
| CRT landfilling | Uranium (U, ore) | primary | 4.16e-08 | 6.23e-09 |
| LPG Production | Uranium (U, ore) | secondary | 1.95e-09 | 2.91e-10 |
| Natural Gas Prod. | Uranium (U, ore) | secondary | -2.01e-07 | -3.00e-08 |
| Natural Gas Prod. | Bauxite (Al2O3, ore) | secondary | -4.51e-07 | -6.75e-08 |
| CRT Incineration | Bauxite (Al2O3, ore) | secondary | -6.05e-06 | -9.06e-07 |
| Fuel Oil #4 Prod. | Bauxite (Al2O3, ore) | secondary | -1.09e-04 | -1.63e-05 |
| Natural Gas Prod. | Petroleum (in ground) | secondary | -4.21e-03 | -6.30e-04 |
| Natural Gas Prod. | Coal, average (in ground) | secondary | -1.17e-02 | -1.75e-03 |
| CRT Incineration | Natural gas | secondary | -9.02e-02 | -1.35e-02 |
| Fuel Oil #4 Prod. | Natural gas (in ground) | secondary | -1.44e-01 | -2.15e-02 |
| Fuel Oil #4 Prod. | Petroleum (in ground) | secondary | -1.58e+00 | -2.36e-01 |
| Natural Gas Prod. | Natural gas (in ground) | secondary | -1.71e+00 | -2.55e-01 |
| **Total End-of-life** | | | **-3.46e+00** | **-5.18e-01** |
| **Total All Life-cycle Stages** | | | **6.68e+02** | **1.00e+02** |

# Table M-4. LCD LCIA Results for the Nonrenewable Resource Use Impact Category

| Process Group | Material | LCI Data Type | Nonrenewable Resource Use (kg) | % of Total |
|---|---|---|---|---|
| **Materials Processing Life-cycle Stage** | | | | |
| Natural Gas Prod. | Natural gas (in ground) | secondary | 2.38e+02 | 6.52e+01 |
| Steel Prod., cold-rolled, semi-finished | Iron (Fe, ore) | secondary | 3.26e+00 | 8.94e-01 |
| Steel Prod., cold-rolled, semi-finished | Coal, average (in ground) | secondary | 1.95e+00 | 5.36e-01 |
| Natural Gas Prod. | Coal, average (in ground) | secondary | 1.63e+00 | 4.47e-01 |
| Polycarbonate Production | Natural gas (in ground) | secondary | 7.18e-01 | 1.97e-01 |
| Natural Gas Prod. | Petroleum (in ground) | secondary | 5.86e-01 | 1.61e-01 |
| Aluminum Prod. | Bauxite (Al2O3, ore) | secondary | 5.09e-01 | 1.40e-01 |
| Styrene-butadiene Copolymer Prod. | Petroleum (in ground) | secondary | 4.48e-01 | 1.23e-01 |
| PMMA Sheet Prod. | Petroleum (in ground) | secondary | 4.43e-01 | 1.21e-01 |
| PMMA Sheet Prod. | Natural gas (in ground) | secondary | 4.19e-01 | 1.15e-01 |
| Aluminum Prod. | Coal, average (in ground) | secondary | 3.66e-01 | 1.00e-01 |
| Polycarbonate Production | Petroleum (in ground) | secondary | 2.42e-01 | 6.65e-02 |
| Steel Prod., cold-rolled, semi-finished | Petroleum (in ground) | secondary | 2.40e-01 | 6.58e-02 |
| Steel Prod., cold-rolled, semi-finished | Natural gas (in ground) | secondary | 2.24e-01 | 6.16e-02 |
| Polycarbonate Production | Coal, average (in ground) | secondary | 2.18e-01 | 5.98e-02 |
| Steel Prod., cold-rolled, semi-finished | Coal, lignite (in ground) | secondary | 2.04e-01 | 5.60e-02 |
| Styrene-butadiene Copolymer Prod. | Natural gas (in ground) | secondary | 1.88e-01 | 5.16e-02 |
| Aluminum Prod. | Petroleum (in ground) | secondary | 1.73e-01 | 4.74e-02 |
| Polycarbonate Production | Coal, lignite (in ground) | secondary | 1.38e-01 | 3.77e-02 |
| PET Resin Production | Petroleum (in ground) | secondary | 9.30e-02 | 2.55e-02 |
| Aluminum Prod. | Natural gas (in ground) | secondary | 7.95e-02 | 2.18e-02 |
| Aluminum Prod. | Coal, lignite (in ground) | secondary | 6.80e-02 | 1.86e-02 |
| PET Resin Production | Coal, average (in ground) | secondary | 3.84e-02 | 1.05e-02 |
| Aluminum Prod. | Pyrite (FeS2, ore) | secondary | 3.75e-02 | 1.03e-02 |
| PET Resin Production | Natural gas (in ground) | secondary | 2.78e-02 | 7.64e-03 |
| PMMA Sheet Prod. | Sulfur (S, in ground) | secondary | 1.23e-02 | 3.37e-03 |
| Steel Prod., cold-rolled, semi-finished | Tin (Sn, ore) | secondary | 1.19e-02 | 3.27e-03 |
| Aluminum Prod. | Iron (Fe, ore) | secondary | 6.53e-03 | 1.79e-03 |
| Steel Prod., cold-rolled, semi-finished | Raw materials (unspecified) | secondary | 3.49e-03 | 9.56e-04 |
| Polycarbonate Production | Sulfur (S, in ground) | secondary | 2.97e-03 | 8.14e-04 |
| PMMA Sheet Prod. | Dolomite (in ground) | secondary | 2.07e-03 | 5.68e-04 |
| Polycarbonate Production | Bentonite (in ground) | secondary | 7.22e-04 | 1.98e-04 |
| PMMA Sheet Prod. | Raw materials (unspecified) | secondary | 5.75e-04 | 1.58e-04 |
| Polycarbonate Production | Iron (Fe, ore) | secondary | 4.85e-04 | 1.33e-04 |
| PMMA Sheet Prod. | Iron (Fe, ore) | secondary | 3.53e-04 | 9.68e-05 |
| PMMA Sheet Prod. | Bauxite (Al2O3, ore) | secondary | 3.07e-04 | 8.42e-05 |
| Aluminum Prod. | Copper (Cu, ore) | secondary | 2.63e-04 | 7.21e-05 |
| Styrene-butadiene Copolymer Prod. | Iron (Fe, ore) | secondary | 2.55e-04 | 7.00e-05 |
| Aluminum Prod. | Bentonite (in ground) | secondary | 2.47e-04 | 6.77e-05 |
| Styrene-butadiene Copolymer Prod. | Bauxite | secondary | 2.10e-04 | 5.76e-05 |
| Polycarbonate Production | Bauxite (Al2O3, ore) | secondary | 1.55e-04 | 4.25e-05 |
| Steel Prod., cold-rolled, semi-finished | Pyrite (FeS2, ore) | secondary | 1.49e-04 | 4.09e-05 |
| PET Resin Production | Coal, lignite (in ground) | secondary | 1.21e-04 | 3.32e-05 |
| Natural Gas Prod. | Bauxite (Al2O3, ore) | secondary | 6.28e-05 | 1.72e-05 |
| Styrene-butadiene Copolymer Prod. | Sulfur (S, in ground) | secondary | 3.56e-05 | 9.78e-06 |
| PET Resin Production | Bauxite (Al2O3, ore) | secondary | 2.90e-05 | 7.97e-06 |
| Natural Gas Prod. | Uranium (U, ore) | secondary | 2.79e-05 | 7.67e-06 |
| PET Resin Production | Iron (Fe, ore) | secondary | 2.63e-05 | 7.22e-06 |

## Table M-4. LCD LCIA Results for the Nonrenewable Resource Use Impact Category

| Process Group | Material | LCI Data Type | Nonrenewable Resource Use (kg) | % of Total |
|---|---|---|---|---|
| Styrene-butadiene Copolymer Prod. | Bentonite (in ground) | secondary | 2.53e-05 | 6.95e-06 |
| Aluminum Prod. | Lead (Pb, ore) | secondary | 2.35e-05 | 6.44e-06 |
| PMMA Sheet Prod. | Potassium chloride (KCl, as K2O, in ground) | secondary | 2.34e-05 | 6.42e-06 |
| Steel Prod., cold-rolled, semi-finished | Uranium (U, ore) | secondary | 2.09e-05 | 5.74e-06 |
| Polycarbonate Production | Uranium (U, ore) | secondary | 1.75e-05 | 4.79e-06 |
| Aluminum Prod. | Uranium (U, ore) | secondary | 1.07e-05 | 2.92e-06 |
| Steel Prod., cold-rolled, semi-finished | Bentonite (in ground) | secondary | 8.78e-06 | 2.41e-06 |
| Steel Prod., cold-rolled, semi-finished | Iron sulfate (FeSO4, ore) | secondary | 7.99e-06 | 2.19e-06 |
| Polycarbonate Production | Calcium sulfate (CaSO4, ore) | secondary | 7.22e-06 | 1.98e-06 |
| Steel Prod., cold-rolled, semi-finished | Bauxite (Al2O3, ore) | secondary | 5.79e-06 | 1.59e-06 |
| PMMA Sheet Prod. | Fluorspar (CaF2, ore) | secondary | 5.37e-06 | 1.47e-06 |
| Polycarbonate Production | Dolomite (in ground) | secondary | 5.16e-06 | 1.42e-06 |
| Polycarbonate Production | Olivine ore | secondary | 4.13e-06 | 1.13e-06 |
| Styrene-butadiene Copolymer Prod. | Potassium chloride (KCl, as K2O, in ground) | secondary | 3.80e-06 | 1.04e-06 |
| Polycarbonate Production | Potassium chloride (KCl, as K2O, in ground) | secondary | 3.09e-06 | 8.49e-07 |
| PMMA Sheet Prod. | Olivine ore | secondary | 3.07e-06 | 8.42e-07 |
| PET Resin Production | Sulfur (S, in ground) | secondary | 2.81e-06 | 7.72e-07 |
| Styrene-butadiene Copolymer Prod. | Calcium sulfate (CaSO4, ore) | secondary | 2.53e-06 | 6.95e-07 |
| PET Resin Production | Uranium (U, ore) | secondary | 1.66e-06 | 4.56e-07 |
| Styrene-butadiene Copolymer Prod. | Dolomite (in ground) | secondary | 1.09e-06 | 2.98e-07 |
| Polycarbonate Production | Lead (Pb, ore) | secondary | 1.03e-06 | 2.83e-07 |
| PMMA Sheet Prod. | Bentonite (in ground) | secondary | 7.67e-07 | 2.10e-07 |
| Styrene-butadiene Copolymer Prod. | Olivine ore | secondary | 7.23e-07 | 1.98e-07 |
| PET Resin Production | Bentonite (in ground) | secondary | 3.63e-07 | 9.96e-08 |
| PET Resin Production | Dolomite (in ground) | secondary | 3.63e-07 | 9.96e-08 |
| PET Resin Production | Olivine | secondary | 2.72e-07 | 7.47e-08 |
| PET Resin Production | Lead (Pb, ore) | secondary | 1.82e-07 | 4.98e-08 |
| Steel Prod., cold-rolled, semi-finished | Copper (Cu, ore) | secondary | 9.10e-08 | 2.50e-08 |
| Steel Prod., cold-rolled, semi-finished | Lead (Pb, ore) | secondary | 2.84e-08 | 7.79e-09 |
| Steel Prod., cold-rolled, semi-finished | Chromium ore | secondary | 1.79e-08 | 4.91e-09 |
| Steel Prod., cold-rolled, semi-finished | Manganese (Mn, ore) | secondary | 1.04e-08 | 2.86e-09 |
| Steel Prod., cold-rolled, semi-finished | Nickel (Ni, ore) | secondary | 6.05e-09 | 1.66e-09 |
| Steel Prod., cold-rolled, semi-finished | Zinc (Zn, ore) | secondary | 6.61e-10 | 1.81e-10 |
| Steel Prod., cold-rolled, semi-finished | Silver (Ag, ore) | secondary | 4.51e-10 | 1.24e-10 |
| **Total Materials Processing** | | | **2.50e+02** | **6.86e+01** |
| **Manufacturing Life-cycle Stage** | | | | |
| LPG Production | Petroleum (in ground) | secondary | 1.80e+01 | 4.93e+00 |
| Japanese Electric Grid | Coal, average (in ground) | model/secondary | 7.68e+00 | 2.11e+00 |
| Natural Gas Prod. | Natural gas (in ground) | secondary | 5.36e+00 | 1.47e+00 |
| Japanese Electric Grid | Petroleum (in ground) | model/secondary | 4.33e+00 | 1.19e+00 |
| Japanese Electric Grid | Natural gas | model/secondary | 4.20e+00 | 1.15e+00 |
| LPG Production | Natural gas (in ground) | secondary | 2.16e+00 | 5.93e-01 |
| LPG Production | Coal, average (in ground) | secondary | 6.44e-01 | 1.77e-01 |
| US electric grid | Coal, average (in ground) | model/secondary | 3.47e-01 | 9.53e-02 |
| Fuel Oil #4 Prod. | Petroleum (in ground) | secondary | 2.26e-01 | 6.20e-02 |
| Fuel Oil #6 Prod. | Petroleum (in ground) | secondary | 1.32e-01 | 3.63e-02 |
| Fuel Oil #2 Prod. | Petroleum (in ground) | secondary | 5.77e-02 | 1.58e-02 |
| Natural Gas Prod. | Coal, average (in ground) | secondary | 3.67e-02 | 1.01e-02 |
| US electric grid | Natural gas | model/secondary | 2.71e-02 | 7.43e-03 |
| Fuel Oil #4 Prod. | Natural gas (in ground) | secondary | 2.06e-02 | 5.64e-03 |
| Natural Gas Prod. | Petroleum (in ground) | secondary | 1.32e-02 | 3.63e-03 |

## Table M-4. LCD LCIA Results for the Nonrenewable Resource Use Impact Category

| Process Group | Material | LCI Data Type | Nonrenewable Resource Use (kg) | % of Total |
|---|---|---|---|---|
| Fuel Oil #6 Prod. | Natural gas (in ground) | secondary | 9.80e-03 | 2.69e-03 |
| US electric grid | Petroleum (in ground) | model/secondary | 7.36e-03 | 2.02e-03 |
| Fuel Oil #2 Prod. | Natural gas (in ground) | secondary | 6.35e-03 | 1.74e-03 |
| Fuel Oil #6 Prod. | Coal, average (in ground) | secondary | 3.69e-03 | 1.01e-03 |
| LPG Production | Bauxite (Al2O3, ore) | secondary | 2.13e-03 | 5.85e-04 |
| Fuel Oil #2 Prod. | Coal, average (in ground) | secondary | 1.96e-03 | 5.39e-04 |
| Japanese Electric Grid | Uranium, yellowcake | model/secondary | 1.02e-03 | 2.80e-04 |
| Panel components | Borax | primary | 9.13e-05 | 2.51e-05 |
| Fuel Oil #4 Prod. | Bauxite (Al2O3, ore) | secondary | 1.56e-05 | 4.29e-06 |
| LPG Production | Uranium (U, ore) | secondary | 1.08e-05 | 2.97e-06 |
| US electric grid | Uranium, yellowcake | model/secondary | 9.39e-06 | 2.58e-06 |
| Fuel Oil #2 Prod. | Bauxite (Al2O3, ore) | secondary | 5.82e-06 | 1.60e-06 |
| Fuel Oil #6 Prod. | Bauxite (Al2O3, ore) | secondary | 5.12e-06 | 1.41e-06 |
| Natural Gas Prod. | Bauxite (Al2O3, ore) | secondary | 1.42e-06 | 3.89e-07 |
| Natural Gas Prod. | Uranium (U, ore) | secondary | 6.31e-07 | 1.73e-07 |
| Fuel Oil #6 Prod. | Uranium (U, ore) | secondary | 6.21e-08 | 1.70e-08 |
| Fuel Oil #2 Prod. | Uranium (U, ore) | secondary | 3.31e-08 | 9.07e-09 |
| **Total Manufacturing** | | | **4.33e+01** | **1.19e+01** |
| **Use, Maintenance and Repair Life-cycle Stage** | | | | |
| US electric grid | Coal, average (in ground) | model/secondary | 6.69e+01 | 1.84e+01 |
| US electric grid | Natural gas | model/secondary | 5.22e+00 | 1.43e+00 |
| US electric grid | Petroleum (in ground) | model/secondary | 1.42e+00 | 3.89e-01 |
| US electric grid | Uranium, yellowcake | model/secondary | 1.81e-03 | 4.97e-04 |
| **Total Use, Maintenance and Repair** | | | **7.36e+01** | **2.02e+01** |
| **End-of-life Life-cycle Stage** | | | | |
| US electric grid | Coal, average (in ground) | model/secondary | 1.27e-02 | 3.49e-03 |
| LCD landfilling | Oil (in ground) | primary | 8.06e-03 | 2.21e-03 |
| LPG Production | Petroleum (in ground) | secondary | 1.48e-03 | 4.05e-04 |
| LCD landfilling | Natural gas (in ground) | primary | 1.09e-03 | 2.98e-04 |
| US electric grid | Natural gas | model/secondary | 9.91e-04 | 2.72e-04 |
| LCD landfilling | Coal, average (in ground) | primary | 7.38e-04 | 2.02e-04 |
| LCD landfilling | Iron (Fe, ore) | primary | 3.96e-04 | 1.09e-04 |
| LCD incineration | Iron (Fe, ore) | secondary | 3.07e-04 | 8.43e-05 |
| US electric grid | Petroleum (in ground) | model/secondary | 2.69e-04 | 7.39e-05 |
| LPG Production | Natural gas (in ground) | secondary | 1.78e-04 | 4.87e-05 |
| LPG Production | Coal, average (in ground) | secondary | 5.28e-05 | 1.45e-05 |
| US electric grid | Uranium, yellowcake | model/secondary | 3.44e-07 | 9.43e-08 |
| LCD landfilling | Bauxite (Al2O3, ore) | primary | 2.12e-07 | 5.82e-08 |
| LPG Production | Bauxite (Al2O3, ore) | secondary | 1.75e-07 | 4.81e-08 |
| LCD landfilling | Uranium (U, ore) | primary | 1.00e-08 | 2.75e-09 |
| LPG Production | Uranium (U, ore) | secondary | 8.88e-10 | 2.44e-10 |
| Natural Gas Prod. | Uranium (U, ore) | secondary | -1.32e-07 | -3.63e-08 |
| Natural Gas Prod. | Bauxite (Al2O3, ore) | secondary | -2.98e-07 | -8.16e-08 |
| LCD incineration | Bauxite (Al2O3, ore) | secondary | -4.37e-06 | -1.20e-06 |
| Fuel Oil #4 Prod. | Bauxite (Al2O3, ore) | secondary | -7.20e-05 | -1.98e-05 |
| Natural Gas Prod. | Petroleum (in ground) | secondary | -2.78e-03 | -7.62e-04 |
| Natural Gas Prod. | Coal, average (in ground) | secondary | -7.71e-03 | -2.12e-03 |
| LCD incineration | Natural gas | secondary | -5.85e-02 | -1.60e-02 |
| Fuel Oil #4 Prod. | Natural gas (in ground) | secondary | -9.48e-02 | -2.60e-02 |

## Table M-4. LCD LCIA Results for the Nonrenewable Resource Use Impact Category

| Process Group | Material | LCI Data Type | Nonrenewable Resource Use (kg) | % of Total |
|---|---|---|---|---|
| Fuel Oil #4 Prod. | Petroleum (in ground) | secondary | -1.04e+00 | -2.86e-01 |
| Natural Gas Prod. | Natural gas (in ground) | secondary | -1.13e+00 | -3.09e-01 |
| **Total End-of-Life** | | | **-2.30e+00** | **-6.32e-01** |
| **Total All Life-cycle Stages** | | | **3.64e+02** | **1.00e+02** |

## Table M-5. CRT LCIA Results for the Energy Use Impact Category

| Process Group | Material | LCI Data Type | Energy Use (MJ) | % of Total |
|---|---|---|---|---|
| **Materials Processing Life-cycle Stage** | | | | |
| Polycarbonate Production | Natural gas (in ground) | secondary | 3.42e+01 | 1.64e-01 |
| Aluminum Prod. | Coal, average (in ground) | secondary | 2.20e+01 | 1.05e-01 |
| Steel Prod., cold-rolled, semi-finished | Petroleum (in ground) | secondary | 2.10e+01 | 1.01e-01 |
| Steel Prod., cold-rolled, semi-finished | Natural gas (in ground) | secondary | 2.04e+01 | 9.79e-02 |
| Aluminum Prod. | Electricity | secondary | 2.03e+01 | 9.76e-02 |
| Aluminum Prod. | Petroleum (in ground) | secondary | 1.99e+01 | 9.54e-02 |
| Styrene-butadiene Copolymer Prod. | Natural gas (in ground) | secondary | 1.91e+01 | 9.19e-02 |
| Steel Prod., cold-rolled, semi-finished | Electricity | secondary | 1.81e+01 | 8.71e-02 |
| Invar | Petroleum (in ground) | secondary | 1.59e+01 | 7.64e-02 |
| Invar | Natural gas (in ground) | secondary | 1.56e+01 | 7.50e-02 |
| Polycarbonate Production | Electricity | secondary | 1.39e+01 | 6.68e-02 |
| Steel Prod., cold-rolled, semi-finished | Coal, average (in ground) | secondary | 1.08e+01 | 5.19e-02 |
| Aluminum Prod. | Natural gas (in ground) | secondary | 9.51e+00 | 4.57e-02 |
| Polycarbonate Production | Petroleum (in ground) | secondary | 9.49e+00 | 4.56e-02 |
| Polycarbonate Production | Coal, average (in ground) | secondary | 8.73e+00 | 4.19e-02 |
| ABS Production | Natural gas (in ground) | secondary | 8.71e+00 | 4.18e-02 |
| Invar | Electricity | secondary | 8.06e+00 | 3.87e-02 |
| Styrene-butadiene Copolymer Prod. | Petroleum (in ground) | secondary | 8.04e+00 | 3.86e-02 |
| Lead | Natural gas (in ground) | secondary | 6.96e+00 | 3.34e-02 |
| Steel Prod., cold-rolled, semi-finished | Uranium (U, ore) | secondary | 6.44e+00 | 3.09e-02 |
| Lead | Coal, average (in ground) | secondary | 6.43e+00 | 3.08e-02 |
| Steel Prod., cold-rolled, semi-finished | Coal, lignite (in ground) | secondary | 6.17e+00 | 2.96e-02 |
| ABS Production | Petroleum (in ground) | secondary | 5.91e+00 | 2.84e-02 |
| Ferrite mfg. | Natural gas (in ground) | secondary | 5.51e+00 | 2.64e-02 |
| Polycarbonate Production | Uranium (U, ore) | secondary | 4.72e+00 | 2.27e-02 |
| Ferrite mfg. | Electricity | secondary | 4.43e+00 | 2.13e-02 |
| Aluminum Prod. | Uranium (U, ore) | secondary | 4.32e+00 | 2.07e-02 |
| Polycarbonate Production | Coal, lignite (in ground) | secondary | 3.65e+00 | 1.75e-02 |
| Lead | Electricity | secondary | 3.14e+00 | 1.51e-02 |
| ABS Production | Electricity | secondary | 3.00e+00 | 1.44e-02 |
| Polystyrene Prod., high-impact | Natural gas (in ground) | secondary | 2.81e+00 | 1.35e-02 |
| Aluminum Prod. | Coal, lignite (in ground) | secondary | 2.71e+00 | 1.30e-02 |
| Lead | Petroleum (in ground) | secondary | 2.69e+00 | 1.29e-02 |
| Ferrite mfg. | Coal, average (in ground) | secondary | 2.39e+00 | 1.15e-02 |
| Ferrite mfg. | Petroleum (in ground) | secondary | 2.10e+00 | 1.01e-02 |
| Ferrite mfg. | Coal, lignite (in ground) | secondary | 1.90e+00 | 9.12e-03 |
| Ferrite mfg. | Uranium (U, ore) | secondary | 1.86e+00 | 8.93e-03 |
| Polystyrene Prod., high-impact | Petroleum (in ground) | secondary | 1.61e+00 | 7.72e-03 |
| Styrene-butadiene Copolymer Prod. | Electricity | secondary | 1.39e+00 | 6.67e-03 |
| Lead | Uranium (U, ore) | secondary | 9.17e-01 | 4.40e-03 |
| Polystyrene Prod., high-impact | Electricity | secondary | 7.29e-01 | 3.50e-03 |
| **Total Materials Processing** | | | **3.66e+02** | **1.75e+00** |
| **Manufacturing Life-cycle Stage** | | | | |
| Glass/frit | Liquified petroleum gas ("propane") | primary | 1.51e+04 | 7.23e+01 |
| LPG Production | Natural gas (in ground) | secondary | 2.01e+03 | 9.63e+00 |
| LPG Production | Petroleum (in ground) | secondary | 4.10e+02 | 1.97e+00 |
| LPG Production | Coal, average (in ground) | secondary | 3.00e+02 | 1.44e+00 |
| CRT tube mfg. | Fuel oil #6 | primary | 1.51e+02 | 7.23e-01 |
| Glass/frit | Natural gas | primary | 5.41e+01 | 2.60e-01 |

## Table M-5. CRT LCIA Results for the Energy Use Impact Category

| Process Group | Material | LCI Data Type | Energy Use (MJ) | % of Total |
|---|---|---|---|---|
| Glass/frit | Fuel oil #2 | primary | 5.06e+01 | 2.43e-01 |
| Glass/frit | Elec-nonlink | primary | 4.75e+01 | 2.28e-01 |
| CRT tube mfg. | Natural gas | primary | 3.73e+01 | 1.79e-01 |
| LPG Production | Uranium (U, ore) | secondary | 3.40e+01 | 1.63e-01 |
| CRT tube mfg. | Elec-nonlink | primary | 3.19e+01 | 1.53e-01 |
| Glass/frit | Elec-nonlink | primary | 2.65e+01 | 1.27e-01 |
| PWB Mfg. | Natural gas | model/secondary | 1.74e+01 | 8.34e-02 |
| CRT tube mfg. | LNG | primary | 1.72e+01 | 8.26e-02 |
| CRT monitor assembly | Elec-nonlink | primary | 1.33e+01 | 6.37e-02 |
| Fuel Oil #6 Prod. | Natural gas (in ground) | secondary | 1.28e+01 | 6.15e-02 |
| PWB Mfg. | Elec-nonlink | model/secondary | 1.00e+01 | 4.82e-02 |
| Fuel Oil #2 Prod. | Natural gas (in ground) | secondary | 6.06e+00 | 2.91e-02 |
| Natural Gas Prod. | Natural gas (in ground) | secondary | 5.83e+00 | 2.80e-02 |
| Fuel Oil #6 Prod. | Petroleum (in ground) | secondary | 5.78e+00 | 2.78e-02 |
| Monitor/module | Fuel oil #4 | primary | 5.76e+00 | 2.77e-02 |
| Fuel Oil #6 Prod. | Coal, average (in ground) | secondary | 2.42e+00 | 1.16e-02 |
| Fuel Oil #2 Prod. | Coal, average (in ground) | secondary | 9.41e-01 | 4.51e-03 |
| Fuel Oil #4 Prod. | Natural gas (in ground) | secondary | 5.95e-01 | 2.85e-03 |
| Fuel Oil #2 Prod. | Petroleum (in ground) | secondary | 5.78e-01 | 2.77e-03 |
| Natural Gas Prod. | Coal, average (in ground) | secondary | 5.21e-01 | 2.50e-03 |
| Natural Gas Prod. | Petroleum (in ground) | secondary | 3.60e-01 | 1.73e-03 |
| Fuel Oil #6 Prod. | Uranium (U, ore) | secondary | 2.75e-01 | 1.32e-03 |
| Fuel Oil #4 Prod. | Petroleum (in ground) | secondary | 2.14e-01 | 1.03e-03 |
| Fuel Oil #2 Prod. | Uranium (U, ore) | secondary | 1.07e-01 | 5.13e-04 |
| Natural Gas Prod. | Uranium (U, ore) | secondary | 6.04e-02 | 2.90e-04 |
| **Total Manufacturing** | | | **1.83e+04** | **8.79e+01** |
| **Use, Maintenance and Repair Life-cycle Stage** | | | | |
| CRT monitor use | Elec-nonlink | primary | 2.29e+03 | 1.10e+01 |
| **Total Use, Maintenance and Repair** | | | **2.29e+03** | **1.10e+01** |
| **End-of-life Manufacturing Stage** | | | | |
| CRT landfilling | Fuel oil #4 | primary | 8.13e-01 | 3.90e-03 |
| CRT landfilling | Natural gas | primary | 7.71e-01 | 3.70e-03 |
| CRT Recycling | Elec-nonlink | primary | 2.29e-01 | 1.10e-03 |
| CRT Recycling | Liquified petroleum gas ("propane") | primary | 1.30e-01 | 6.24e-04 |
| LPG Production | Natural gas (in ground) | secondary | 1.73e-02 | 8.32e-05 |
| LPG Production | Petroleum (in ground) | secondary | 3.54e-03 | 1.70e-05 |
| LPG Production | Coal, average (in ground) | secondary | 2.59e-03 | 1.24e-05 |
| LPG Production | Uranium (U, ore) | secondary | 2.94e-04 | 1.41e-06 |
| Natural Gas Prod. | Uranium (U, ore) | secondary | -3.03e-02 | -1.45e-04 |
| Natural Gas Prod. | Petroleum (in ground) | secondary | -1.81e-01 | -8.67e-04 |
| Natural Gas Prod. | Coal, average (in ground) | secondary | -2.61e-01 | -1.25e-03 |
| Fuel Oil #4 Prod. | Petroleum (in ground) | secondary | -2.30e+00 | -1.10e-02 |
| Natural Gas Prod. | Natural gas (in ground) | secondary | -2.92e+00 | -1.40e-02 |
| Fuel Oil #4 Prod. | Natural gas (in ground) | secondary | -6.39e+00 | -3.07e-02 |
| CRT Incineration | Natural gas | secondary | -5.88e+01 | -2.82e-01 |
| CRT Incineration | Fuel oil #4 | secondary | -5.88e+01 | -2.82e-01 |
| **Total End-of-life** | | | **-1.28e+02** | **-6.13e-01** |
| **Total All Life-cycle Stages** | | | **2.08e+04** | **1.00e+02** |

## Table M-6. LCD LCIA Results for the Energy Use Impact Category

| Process Group | Material | LCI Data Type | Energy Use (MJ) | % of Total |
|---|---|---|---|---|
| **Materials processing Life-cycle Stage** | | | | |
| Natural Gas Prod. | Natural gas (in ground) | secondary | 4.07e+02 | 1.43e+01 |
| Natural Gas Prod. | Coal, average (in ground) | secondary | 3.64e+01 | 1.28e+00 |
| Natural Gas Prod. | Petroleum (in ground) | secondary | 2.52e+01 | 8.86e-01 |
| Polycarbonate Production | Natural gas (in ground) | secondary | 1.91e+01 | 6.72e-01 |
| PMMA Sheet Prod. | Petroleum (in ground) | secondary | 1.18e+01 | 4.17e-01 |
| PMMA Sheet Prod. | Natural gas (in ground) | secondary | 1.16e+01 | 4.09e-01 |
| Steel Prod., cold-rolled, semi-finished | Petroleum (in ground) | secondary | 1.03e+01 | 3.63e-01 |
| Steel Prod., cold-rolled, semi-finished | Natural gas (in ground) | secondary | 9.99e+00 | 3.52e-01 |
| PMMA Sheet Prod. | Electricity | secondary | 8.96e+00 | 3.16e-01 |
| Steel Prod., cold-rolled, semi-finished | Electricity | secondary | 8.89e+00 | 3.13e-01 |
| Styrene-butadiene Copolymer Prod. | Natural gas (in ground) | secondary | 8.37e+00 | 2.95e-01 |
| Aluminum Prod. | Coal, average (in ground) | secondary | 8.18e+00 | 2.88e-01 |
| Polycarbonate Production | Electricity | secondary | 7.77e+00 | 2.74e-01 |
| Aluminum Prod. | Electricity | secondary | 7.57e+00 | 2.67e-01 |
| Aluminum Prod. | Petroleum (in ground) | secondary | 7.40e+00 | 2.61e-01 |
| Polycarbonate Production | Petroleum (in ground) | secondary | 5.30e+00 | 1.87e-01 |
| Steel Prod., cold-rolled, semi-finished | Coal, average (in ground) | secondary | 5.30e+00 | 1.87e-01 |
| Polycarbonate Production | Coal, average (in ground) | secondary | 4.87e+00 | 1.72e-01 |
| Natural Gas Prod. | Uranium (U, ore) | secondary | 4.22e+00 | 1.48e-01 |
| Aluminum Prod. | Natural gas (in ground) | secondary | 3.54e+00 | 1.25e-01 |
| Styrene-butadiene Copolymer Prod. | Petroleum (in ground) | secondary | 3.51e+00 | 1.24e-01 |
| Steel Prod., cold-rolled, semi-finished | Uranium (U, ore) | secondary | 3.16e+00 | 1.11e-01 |
| Steel Prod., cold-rolled, semi-finished | Coal, lignite (in ground) | secondary | 3.02e+00 | 1.07e-01 |
| Polycarbonate Production | Uranium (U, ore) | secondary | 2.64e+00 | 9.28e-02 |
| Polycarbonate Production | Coal, lignite (in ground) | secondary | 2.04e+00 | 7.18e-02 |
| Aluminum Prod. | Uranium (U, ore) | secondary | 1.61e+00 | 5.66e-02 |
| PET Resin Production | Petroleum (in ground) | secondary | 1.57e+00 | 5.54e-02 |
| Aluminum Prod. | Coal, lignite (in ground) | secondary | 1.01e+00 | 3.55e-02 |
| PET Resin Production | Coal, average (in ground) | secondary | 8.58e-01 | 3.02e-02 |
| PET Resin Production | Electricity | secondary | 7.72e-01 | 2.72e-02 |
| Styrene-butadiene Copolymer Prod. | Electricity | secondary | 6.07e-01 | 2.14e-02 |
| PET Resin Production | Natural gas (in ground) | secondary | 3.16e-01 | 1.11e-02 |
| PET Resin Production | Uranium (U, ore) | secondary | 2.51e-01 | 8.82e-03 |
| PET Resin Production | Coal, lignite (in ground) | secondary | 1.79e-03 | 6.32e-05 |
| **Total Materials Processing** | | | **6.33e+02** | **2.23e+01** |
| **Manufacturing Life-cycle Stage** | | | | |
| LCD glass mfg. | Liquified petroleum gas ("propane") | primary | 6.98e+02 | 2.46e+01 |
| Monitor/module | Elec-nonlink | primary | 2.54e+02 | 8.93e+00 |
| Monitor/module | LNG | primary | 1.65e+02 | 5.81e+00 |
| LPG Production | Natural gas (in ground) | secondary | 9.63e+01 | 3.39e+00 |
| Panel components | Elec-nonlink | primary | 4.08e+01 | 1.44e+00 |
| Monitor/module | Natural gas | primary | 3.77e+01 | 1.33e+00 |
| Monitor/module | Liquified petroleum gas ("propane") | primary | 2.50e+01 | 8.81e-01 |
| LPG Production | Petroleum (in ground) | secondary | 1.97e+01 | 6.93e-01 |
| LPG Production | Coal, average (in ground) | secondary | 1.44e+01 | 5.07e-01 |
| Monitor/module | Kerosene | primary | 1.31e+01 | 4.60e-01 |
| Natural Gas Prod. | Natural gas (in ground) | secondary | 9.19e+00 | 3.24e-01 |
| Monitor/module | Fuel oil #4 | primary | 8.88e+00 | 3.13e-01 |
| PWB Mfg. | Natural gas | model/secondary | 7.67e+00 | 2.70e-01 |

## Table M-6. LCD LCIA Results for the Energy Use Impact Category

| Process Group | Material | LCI Data Type | Energy Use (MJ) | % of Total |
|---|---|---|---|---|
| Panel components | Kerosene | primary | 7.36e+00 | 2.59e-01 |
| Panel components | Elec-nonlink | primary | 5.13e+00 | 1.81e-01 |
| Panel components | Fuel oil #6 | primary | 5.13e+00 | 1.81e-01 |
| Monitor/module | Elec-nonlink | primary | 4.92e+00 | 1.73e-01 |
| PWB Mfg. | Elec-nonlink | model/secondary | 4.43e+00 | 1.56e-01 |
| Panel components | Natural gas | primary | 3.85e+00 | 1.35e-01 |
| Backlight | Elec-nonlink | primary | 2.62e+00 | 9.23e-02 |
| LCD glass mfg. | Natural gas | primary | 2.50e+00 | 8.82e-02 |
| LCD glass mfg. | Fuel oil #2 | primary | 2.34e+00 | 8.26e-02 |
| LCD glass mfg. | Elec-nonlink | primary | 2.20e+00 | 7.75e-02 |
| LPG Production | Uranium (U, ore) | secondary | 1.63e+00 | 5.75e-02 |
| Backlight | Elec-nonlink | primary | 1.24e+00 | 4.36e-02 |
| Fuel Oil #4 Prod. | Natural gas (in ground) | secondary | 9.16e-01 | 3.23e-02 |
| Natural Gas Prod. | Coal, average (in ground) | secondary | 8.21e-01 | 2.89e-02 |
| Backlight | Elec-nonlink | primary | 6.01e-01 | 2.12e-02 |
| Natural Gas Prod. | Petroleum (in ground) | secondary | 5.68e-01 | 2.00e-02 |
| Panel components | Elec-nonlink | primary | 5.04e-01 | 1.77e-02 |
| Fuel Oil #6 Prod. | Natural gas (in ground) | secondary | 4.36e-01 | 1.54e-02 |
| Fuel Oil #4 Prod. | Petroleum (in ground) | secondary | 3.30e-01 | 1.16e-02 |
| Fuel Oil #2 Prod. | Natural gas (in ground) | secondary | 2.83e-01 | 9.96e-03 |
| Fuel Oil #6 Prod. | Petroleum (in ground) | secondary | 1.97e-01 | 6.93e-03 |
| Panel components | Steam (100 psig) | primary | 1.04e-01 | 3.66e-03 |
| Natural Gas Prod. | Uranium (U, ore) | secondary | 9.51e-02 | 3.35e-03 |
| Fuel Oil #6 Prod. | Coal, average (in ground) | secondary | 8.24e-02 | 2.90e-03 |
| Fuel Oil #2 Prod. | Coal, average (in ground) | secondary | 4.39e-02 | 1.55e-03 |
| Fuel Oil #2 Prod. | Petroleum (in ground) | secondary | 2.70e-02 | 9.50e-04 |
| Panel components | Fuel oil #2 | primary | 1.78e-02 | 6.25e-04 |
| Fuel Oil #6 Prod. | Uranium (U, ore) | secondary | 9.37e-03 | 3.30e-04 |
| Fuel Oil #2 Prod. | Uranium (U, ore) | secondary | 4.99e-03 | 1.76e-04 |
| Backlight | LNG | primary | 2.14e-04 | 7.53e-06 |
| Backlight | Natural gas | primary | 1.85e-04 | 6.53e-06 |
| Panel components | Natural gas | primary | 5.24e-06 | 1.85e-07 |
| **Total Manufacturing** | | | **1.44e+03** | **5.06e+01** |
| **Use, Maintenance and Repair Life-cycle Stage** | | | | |
| LCD monitor use | Elec-nonlink | primary | 8.53e+02 | 3.00e+01 |
| **Total use, Maintenance and Repair** | | | **8.53e+02** | **3.00e+01** |
| **End-of-life Life-cycle Stage** | | | | |
| LCD landfilling | Fuel oil #4 | primary | 1.96e-01 | 6.90e-03 |
| LCD landfilling | Natural gas | primary | 1.86e-01 | 6.54e-03 |
| LCD recycling | Elec-nonlink | primary | 1.62e-01 | 5.70e-03 |
| LCD recycling | Liquified petroleum gas ("propane") | primary | 5.93e-02 | 2.09e-03 |
| LPG Production | Natural gas (in ground) | secondary | 7.91e-03 | 2.78e-04 |
| LPG Production | Petroleum (in ground) | secondary | 1.61e-03 | 5.69e-05 |
| LPG Production | Coal, average (in ground) | secondary | 1.18e-03 | 4.16e-05 |
| LPG Production | Uranium (U, ore) | secondary | 1.34e-04 | 4.72e-06 |
| Natural Gas Prod. | Uranium (U, ore) | secondary | -2.00e-02 | -7.04e-04 |
| Natural Gas Prod. | Petroleum (in ground) | secondary | -1.19e-01 | -4.20e-03 |
| Natural Gas Prod. | Coal, average (in ground) | secondary | -1.72e-01 | -6.07e-03 |
| Fuel Oil #4 Prod. | Petroleum (in ground) | secondary | -1.52e+00 | -5.35e-02 |
| Natural Gas Prod. | Natural gas (in ground) | secondary | -1.93e+00 | -6.80e-02 |
| Fuel Oil #4 Prod. | Natural gas (in ground) | secondary | -4.22e+00 | -1.49e-01 |

## Table M-6. LCD LCIA Results for the Energy Use Impact Category

| Process Group | Material | LCI Data Type | Energy Use (MJ) | % of Total |
|---|---|---|---|---|
| LCD incineration | Natural gas | secondary | -3.85e+01 | -1.36e+00 |
| LCD incineration | Fuel oil #4 | secondary | -3.85e+01 | -1.36e+00 |
| **Total End-of-life** | | | **-8.44e+01** | **-2.97e+00** |
| **Total All Life-cycle Stages** | | | **2.84e+03** | **1.00e+02** |

## Table M-7. CRT LCIA Results for the Solid Waste Landfill Use Impact Category

| Process Group | Material | LCI Data Type | Solid Waste Landfill Use (m3) | % of Total |
|---|---|---|---|---|
| **Materials Processing Life-cycle Stage** | | | | |
| Steel Prod., cold-rolled, semi-finished | Unspecified solid waste | secondary | 1.09e-02 | 6.56e+00 |
| Steel Prod., cold-rolled, semi-finished | Mining waste | secondary | 6.41e-04 | 3.85e-01 |
| Invar | Mining waste | secondary | 1.82e-04 | 1.09e-01 |
| Ferrite mfg. | Mining waste | secondary | 1.77e-04 | 1.06e-01 |
| Steel Prod., cold-rolled, semi-finished | Mineral waste | secondary | 6.34e-05 | 3.81e-02 |
| Polycarbonate Production | Mineral waste | secondary | 5.41e-05 | 3.25e-02 |
| Steel Prod., cold-rolled, semi-finished | Mixed industrial (waste) | secondary | 4.50e-05 | 2.70e-02 |
| Invar | Unspecified solid waste | secondary | 3.53e-05 | 2.12e-02 |
| Ferrite mfg. | Unspecified solid waste | secondary | 3.45e-05 | 2.07e-02 |
| Steel Prod., cold-rolled, semi-finished | Slag and ash | secondary | 1.83e-05 | 1.10e-02 |
| Invar | Mineral waste | secondary | 1.82e-05 | 1.09e-02 |
| Polycarbonate Production | Slag and ash | secondary | 1.80e-05 | 1.08e-02 |
| Ferrite mfg. | Mineral waste | secondary | 1.78e-05 | 1.07e-02 |
| ABS Production | Mineral waste | secondary | 1.27e-05 | 7.64e-03 |
| ABS Production | Unspecified solid waste | secondary | 1.09e-05 | 6.57e-03 |
| Polycarbonate Production | Mixed industrial (waste) | secondary | 9.93e-06 | 5.96e-03 |
| Invar | Slag and ash | secondary | 5.24e-06 | 3.15e-03 |
| Ferrite mfg. | Slag and ash | secondary | 5.12e-06 | 3.07e-03 |
| Styrene-butadiene Copolymer Prod. | Mineral waste | secondary | 4.52e-06 | 2.72e-03 |
| ABS Production | Non toxic chemical waste (unspecified) | secondary | 3.21e-06 | 1.93e-03 |
| ABS Production | Slag and ash | secondary | 2.68e-06 | 1.61e-03 |
| ABS Production | Mixed industrial (waste) | secondary | 2.22e-06 | 1.34e-03 |
| Steel Prod., cold-rolled, semi-finished | Non toxic chemical waste (unspecified) | secondary | 2.02e-06 | 1.21e-03 |
| Polycarbonate Production | Non toxic chemical waste (unspecified) | secondary | 1.79e-06 | 1.08e-03 |
| Polystyrene Prod., high-impact | Mineral waste | secondary | 1.59e-06 | 9.56e-04 |
| Styrene-butadiene Copolymer Prod. | Non toxic chemical waste (unspecified) | secondary | 1.35e-06 | 8.09e-04 |
| Invar | Mixed industrial (waste) | secondary | 1.16e-06 | 6.96e-04 |
| Ferrite mfg. | Mixed industrial (waste) | secondary | 1.13e-06 | 6.80e-04 |
| Styrene-butadiene Copolymer Prod. | Slag and ash | secondary | 1.09e-06 | 6.54e-04 |
| Styrene-butadiene Copolymer Prod. | Mixed industrial (waste) | secondary | 1.00e-06 | 6.03e-04 |
| Polystyrene Prod., high-impact | Non toxic chemical waste (unspecified) | secondary | 6.74e-07 | 4.05e-04 |
| Polystyrene Prod., high-impact | Mixed industrial (waste) | secondary | 4.16e-07 | 2.50e-04 |
| Aluminum Prod. | Calcium | secondary | 3.72e-07 | 2.23e-04 |
| Polystyrene Prod., high-impact | Slag and ash | secondary | 3.66e-07 | 2.20e-04 |
| Styrene-butadiene Copolymer Prod. | Unspecified solid waste | secondary | 2.62e-07 | 1.57e-04 |
| Invar | Calcium | secondary | 1.79e-07 | 1.07e-04 |
| Polycarbonate Production | Unspecified solid waste | secondary | 1.09e-07 | 6.55e-05 |
| Lead | Calcium | secondary | 9.31e-08 | 5.59e-05 |
| Steel Prod., cold-rolled, semi-finished | Sewage sludge (unspecified) | secondary | 6.64e-08 | 3.99e-05 |
| Aluminum Prod. | Carbon | secondary | 5.48e-08 | 3.29e-05 |
| Steel Prod., cold-rolled, semi-finished | Waste oil | secondary | 5.37e-08 | 3.23e-05 |
| Steel Prod., cold-rolled, semi-finished | Non mineral waste (inert) | secondary | 4.46e-08 | 2.68e-05 |
| Ferrite mfg. | Calcium | secondary | 3.41e-08 | 2.05e-05 |
| Steel Prod., cold-rolled, semi-finished | Calcium | secondary | 3.02e-08 | 1.81e-05 |
| Invar | Carbon | secondary | 2.62e-08 | 1.57e-05 |
| Aluminum Prod. | Waste oil | secondary | 2.25e-08 | 1.35e-05 |

## Table M-7. CRT LCIA Results for the Solid Waste Landfill Use Impact Category

| Process Group | Material | LCI Data Type | Solid Waste Landfill Use (m3) | % of Total |
|---|---|---|---|---|
| Polystyrene Prod., high-impact | Unspecified solid waste | secondary | 2.02e-08 | 1.21e-05 |
| Invar | Non toxic chemical waste (unspecified) | secondary | 1.54e-08 | 9.25e-06 |
| Ferrite mfg. | Non toxic chemical waste (unspecified) | secondary | 1.50e-08 | 9.03e-06 |
| Lead | Carbon | secondary | 1.36e-08 | 8.19e-06 |
| Invar | Non mineral waste (inert) | secondary | 1.08e-08 | 6.46e-06 |
| Ferrite mfg. | Non mineral waste (inert) | secondary | 1.05e-08 | 6.30e-06 |
| Invar | Waste oil | secondary | 8.51e-09 | 5.11e-06 |
| Ferrite mfg. | Carbon | secondary | 4.90e-09 | 2.94e-06 |
| Steel Prod., cold-rolled, semi-finished | Carbon | secondary | 4.32e-09 | 2.59e-06 |
| Lead | Waste oil | secondary | 4.30e-09 | 2.58e-06 |
| Ferrite mfg. | Waste oil | secondary | 2.72e-10 | 1.63e-07 |
| **Total Materials Processing** | | | **1.23e-02** | **7.39e+00** |
| **Manufacturing Life-cycle Stage** | | | | |
| LPG Production | Slag and ash | secondary | 3.46e-02 | 2.08e+01 |
| LPG Production | Unspecified waste | secondary | 7.44e-03 | 4.47e+00 |
| Glass/frit | Waste water treatment (WWT) sludge | primary | 7.28e-03 | 4.37e+00 |
| CRT tube mfg. | Waste water treatment (WWT) sludge | primary | 2.37e-03 | 1.42e+00 |
| LPG Production | Mixed industrial (waste) | secondary | 1.24e-03 | 7.47e-01 |
| US electric grid | Coal waste | model/secondary | 1.01e-03 | 6.09e-01 |
| Japanese Electric Grid | Coal waste | model/secondary | 8.10e-04 | 4.86e-01 |
| US electric grid | Dust/sludge | model/secondary | 3.14e-04 | 1.89e-01 |
| Fuel Oil #6 Prod. | Slag and ash | secondary | 2.79e-04 | 1.68e-01 |
| US electric grid | Fly/bottom ash | model/secondary | 2.54e-04 | 1.52e-01 |
| Japanese Electric Grid | Dust/sludge | model/secondary | 2.51e-04 | 1.50e-01 |
| Japanese Electric Grid | Fly/bottom ash | model/secondary | 2.02e-04 | 1.22e-01 |
| Fuel Oil #2 Prod. | Slag and ash | secondary | 1.09e-04 | 6.52e-02 |
| Natural Gas Prod. | Slag and ash | secondary | 6.01e-05 | 3.61e-02 |
| Fuel Oil #6 Prod. | Unspecified waste | secondary | 6.00e-05 | 3.60e-02 |
| Fuel Oil #2 Prod. | Unspecified waste | secondary | 2.33e-05 | 1.40e-02 |
| Natural Gas Prod. | Unspecified waste | secondary | 1.29e-05 | 7.76e-03 |
| Fuel Oil #4 Prod. | Slag and ash | secondary | 1.16e-05 | 6.96e+00 |
| Glass/frit | Potassium Carbonate | primary | 1.08e-05 | 6.48e-03 |
| CRT tube mfg. | Wood, average | primary | 9.89e-06 | 5.94e-03 |
| Glass/frit | Sodium Carbonate | primary | 9.74e-06 | 5.85e-03 |
| Glass/frit | CRT glass, faceplate | primary | 9.73e-06 | 5.84e-03 |
| Glass/frit | Unspecified sludge | primary | 7.69e-06 | 4.62e-03 |
| CRT tube mfg. | Sludge (phosphor) | primary | 4.31e-06 | 2.59e-03 |
| Fuel Oil #6 Prod. | Mixed industrial (waste) | secondary | 4.23e-06 | 2.54e-03 |
| Fuel Oil #2 Prod. | Mixed industrial (waste) | secondary | 3.49e-06 | 2.10e-03 |
| Fuel Oil #4 Prod. | Unspecified waste | secondary | 2.49e-06 | 1.49e-03 |
| CRT tube mfg. | Sludge (aquadag) | primary | 2.22e-06 | 1.34e-03 |
| LPG Production | Non toxic chemical waste (unspecified) | secondary | 1.35e-06 | 8.13e-04 |
| LPG Production | Mineral waste | secondary | 1.01e-06 | 6.07e-04 |
| Glass/frit | Waste refractory | primary | 9.52e-07 | 5.72e-04 |
| Glass/frit | blasting media | primary | 8.16e-07 | 4.90e-04 |
| Glass/frit | Oily rags & filter media | primary | 7.25e-07 | 4.36e-04 |
| Glass/frit | Plating process sludge | primary | 2.98e-07 | 1.79e-04 |

## Table M-7. CRT LCIA Results for the Solid Waste Landfill Use Impact Category

| Process Group | Material | LCI Data Type | Solid Waste Landfill Use (m3) | % of Total |
|---|---|---|---|---|
| Fuel Oil #4 Prod. | Mixed industrial (waste) | secondary | 2.84e-07 | 1.71e-04 |
| Glass/frit | acid absorbent | primary | 1.02e-07 | 6.11e-05 |
| Natural Gas Prod. | Mixed industrial (waste) | secondary | 2.51e-08 | 1.51e-05 |
| Fuel Oil #6 Prod. | Non toxic chemical waste (unspecified) | secondary | 4.58e-09 | 2.75e-06 |
| Fuel Oil #2 Prod. | Non toxic chemical waste (unspecified) | secondary | 3.80e-09 | 2.28e-06 |
| Fuel Oil #6 Prod. | Mineral waste | secondary | 3.42e-09 | 2.05e-06 |
| Fuel Oil #2 Prod. | Mineral waste | secondary | 2.84e-09 | 1.70e-06 |
| Fuel Oil #4 Prod. | Non toxic chemical waste (unspecified) | secondary | 3.09e-10 | 1.85e-07 |
| Fuel Oil #4 Prod. | Mineral waste | secondary | 2.30e-10 | 1.38e-07 |
| Natural Gas Prod. | Non toxic chemical waste (unspecified) | secondary | 2.74e-11 | 1.64e-08 |
| Natural Gas Prod. | Mineral waste | secondary | 2.04e-11 | 1.23e-08 |
| **Total Manufacturing** | | | **5.64e-02** | **3.39e+01** |
| **Use, Maintenance and Repair Life-cycle Stage** | | | | |
| US electric grid | Coal waste | model/secondary | 6.35e-02 | 3.82e+01 |
| US electric grid | Dust/sludge | model/secondary | 1.97e-02 | 1.18e+01 |
| US electric grid | Fly/bottom ash | model/secondary | 1.59e-02 | 9.54e+00 |
| **Total Use, Maintenance and Repair** | | | **9.91e-02** | **5.95e+01** |
| **End-of-life Life-cycle Stage** | | | | |
| CRT landfilling | EOL CRT Monitor, landfilled | primary | 8.31e-03 | 4.99e+00 |
| US electric grid | Coal waste | model/secondary | 6.36e-06 | 3.82e-03 |
| CRT landfilling | Unspecified solid waste | primary | 4.34e-06 | 2.61e-03 |
| CRT Incineration | Mixed industrial (waste) | secondary | 2.41e-06 | 1.45e-03 |
| US electric grid | Dust/sludge | model/secondary | 1.97e-06 | 1.18e-03 |
| US electric grid | Fly/bottom ash | model/secondary | 1.59e-06 | 9.54e-04 |
| LPG Production | Slag and ash | secondary | 2.99e-07 | 1.79e-04 |
| LPG Production | Unspecified waste | secondary | 6.42e-08 | 3.85e-05 |
| LPG Production | Mixed industrial (waste) | secondary | 1.07e-08 | 6.44e-06 |
| LPG Production | Non toxic chemical waste (unspecified) | secondary | 1.17e-11 | 7.01e-09 |
| LPG Production | Mineral waste | secondary | 8.72e-12 | 5.24e-09 |
| Natural Gas Prod. | Mineral waste | secondary | -1.02e-11 | -6.15e-09 |
| Natural Gas Prod. | Non toxic chemical waste (unspecified) | secondary | -1.37e-11 | -8.24e-09 |
| CRT Incineration | Mineral waste | secondary | -1.59e-10 | -9.55e-08 |
| CRT Incineration | Non toxic chemical waste (unspecified) | secondary | -2.13e-10 | -1.28e-07 |
| Fuel Oil #4 Prod. | Mineral waste | secondary | -2.48e-09 | -1.49e-06 |
| Fuel Oil #4 Prod. | Non toxic chemical waste (unspecified) | secondary | -3.32e-09 | -1.99e-06 |
| CRT Incineration | Mining waste | secondary | -4.23e-09 | -2.54e-06 |
| Natural Gas Prod. | Mixed industrial (waste) | secondary | -1.26e-08 | -7.57e-06 |
| Fuel Oil #4 Prod. | Mixed industrial (waste) | secondary | -3.05e-06 | -1.83e-03 |
| Natural Gas Prod. | Unspecified waste | secondary | -6.48e-06 | -3.89e-03 |
| Fuel Oil #4 Prod. | Unspecified waste | secondary | -2.67e-05 | -1.61e-02 |
| Natural Gas Prod. | Slag and ash | secondary | -3.01e-05 | -1.81e-02 |
| Fuel Oil #4 Prod. | Slag and ash | secondary | -1.25e-04 | -7.48e-02 |
| CRT Incineration | Unspecified solid waste | secondary | -1.76e-03 | -1.06e+00 |
| CRT Incineration | Slag and ash | secondary | -7.70e-03 | -4.62e+00 |

## Table M-7. CRT LCIA Results for the Solid Waste Landfill Use Impact Category

| Process Group | Material | LCI Data Type | Solid Waste Landfill Use (m3) | % of Total |
|---|---|---|---|---|
| **Total End-of-life** | | | **-1.32e-03** | **-7.95e-01** |
| **Total All Life-cycle Stages** | Total | | **1.67e-01** | **1.00e+02** |

## Table M-8. LCD LCIA Results for the Solid Waste Landfill Use Impact Category

| Process Group | Material | LCI Data Type | Solid Waste landfill Use (m3) | % of Total |
|---|---|---|---|---|
| **Materials Processing Life-cycle Stage** | | | | |
| Steel Prod., cold-rolled, semi-finished | Unspecified solid waste | secondary | 5.36e-03 | 9.87e+00 |
| Natural Gas Prod. | Slag and ash | secondary | 4.20e-03 | 7.74e+00 |
| Natural Gas Prod. | Unspecified waste | secondary | 9.03e-04 | 1.66e+00 |
| Steel Prod., cold-rolled, semi-finished | Mining waste | secondary | 3.14e-04 | 5.79e-01 |
| Steel Prod., cold-rolled, semi-finished | Mineral waste | secondary | 3.11e-05 | 5.73e-02 |
| Polycarbonate Production | Mineral waste | secondary | 3.02e-05 | 5.56e-02 |
| PMMA Sheet Prod. | Mixed industrial (waste) | secondary | 2.45e-05 | 4.51e-02 |
| Steel Prod., cold-rolled, semi-finished | Mixed industrial (waste) | secondary | 2.21e-05 | 4.06e-02 |
| PMMA Sheet Prod. | Mineral waste | secondary | 1.99e-05 | 3.67e-02 |
| Polycarbonate Production | Slag and ash | secondary | 1.00e-05 | 1.85e-02 |
| PMMA Sheet Prod. | Non toxic chemical waste (unspecified) | secondary | 9.41e-06 | 1.73e-02 |
| Steel Prod., cold-rolled, semi-finished | Slag and ash | secondary | 8.99e-06 | 1.66e-02 |
| PMMA Sheet Prod. | Slag and ash | secondary | 6.26e-06 | 1.15e-02 |
| Polycarbonate Production | Mixed industrial (waste) | secondary | 5.55e-06 | 1.02e-02 |
| PET Resin Production | Mineral waste | secondary | 2.87e-06 | 5.29e-03 |
| Styrene-butadiene Copolymer Prod. | Mineral waste | secondary | 1.98e-06 | 3.64e-03 |
| Natural Gas Prod. | Mixed industrial (waste) | secondary | 1.76e-06 | 3.24e-03 |
| PET Resin Production | Slag and ash | secondary | 1.24e-06 | 2.29e-03 |
| Polycarbonate Production | Non toxic chemical waste (unspecified) | secondary | 1.00e-06 | 1.84e-03 |
| Steel Prod., cold-rolled, semi-finished | Non toxic chemical waste (unspecified) | secondary | 9.88e-07 | 1.82e-03 |
| PET Resin Production | Non toxic chemical waste (unspecified) | secondary | 7.69e-07 | 1.42e-03 |
| Styrene-butadiene Copolymer Prod. | Non toxic chemical waste (unspecified) | secondary | 5.89e-07 | 1.09e-03 |
| Styrene-butadiene Copolymer Prod. | Slag and ash | secondary | 4.76e-07 | 8.77e-04 |
| Styrene-butadiene Copolymer Prod. | Mixed industrial (waste) | secondary | 4.39e-07 | 8.08e-04 |
| PET Resin Production | Unspecified solid waste | secondary | 3.65e-07 | 6.73e-04 |
| Aluminum Prod. | Calcium | secondary | 1.38e-07 | 2.55e-04 |
| Styrene-butadiene Copolymer Prod. | Unspecified solid waste | secondary | 1.15e-07 | 2.11e-04 |
| PMMA Sheet Prod. | Unspecified solid waste | secondary | 7.91e-08 | 1.46e-04 |
| Polycarbonate Production | Unspecified solid waste | secondary | 6.10e-08 | 1.12e-04 |
| Steel Prod., cold-rolled, semi-finished | Sewage sludge (unspecified) | secondary | 3.25e-08 | 6.00e-05 |
| Steel Prod., cold-rolled, semi-finished | Waste oil | secondary | 2.63e-08 | 4.85e-05 |
| Steel Prod., cold-rolled, semi-finished | Non mineral waste (inert) | secondary | 2.19e-08 | 4.03e-05 |
| Aluminum Prod. | Carbon | secondary | 2.04e-08 | 3.76e-05 |
| Steel Prod., cold-rolled, semi-finished | Calcium | secondary | 1.48e-08 | 2.73e-05 |
| Aluminum Prod. | Waste oil | secondary | 8.38e-09 | 1.54e-05 |
| Steel Prod., cold-rolled, semi-finished | Carbon | secondary | 2.12e-09 | 3.90e-06 |
| Natural Gas Prod. | Non toxic chemical waste (unspecified) | secondary | 1.91e-09 | 3.52e-06 |
| Natural Gas Prod. | Mineral waste | secondary | 1.43e-09 | 2.63e-06 |
| **Total Materials Processing** | | | **1.10e-02** | **2.02e+01** |
| **Manufacturing Life-cycle Stage** | | | | |
| Monitor/module | Waste water treatment (WWT) sludge | primary | 3.06e-03 | 5.65e+00 |
| Japanese Electric Grid | Coal waste | model/secondary | 2.72e-03 | 5.02e+00 |
| LPG Production | Slag and ash | secondary | 1.66e-03 | 3.06e+00 |
| Japanese Electric Grid | Dust/sludge | model/secondary | 8.43e-04 | 1.55e+00 |
| Japanese Electric Grid | Fly/bottom ash | model/secondary | 6.81e-04 | 1.25e+00 |
| LPG Production | Unspecified waste | secondary | 3.57e-04 | 6.57e-01 |
| LCD glass mfg. | Waste water treatment (WWT) sludge | primary | 3.39e-04 | 6.25e-01 |
| Monitor/module | Waste plastics from LCD monitor | primary | 2.89e-04 | 5.33e-01 |
| Monitor/module | Waste acid (containing F and detergents) | primary | 1.80e-04 | 3.31e-01 |

## Table M-8. LCD LCIA Results for the Solid Waste Landfill Use Impact Category

| Process Group | Material | LCI Data Type | Solid Waste landfill Use (m3) | % of Total |
|---|---|---|---|---|
| US electric grid | Coal waste | model/secondary | 1.23e-04 | 2.27e-01 |
| Natural Gas Prod. | Slag and ash | secondary | 9.47e-05 | 1.75e-01 |
| Monitor/module | Waste LCD glass | primary | 8.23e-05 | 1.52e-01 |
| LPG Production | Mixed industrial (waste) | secondary | 5.97e-05 | 1.10e-01 |
| US electric grid | Dust/sludge | model/secondary | 3.81e-05 | 7.03e-02 |
| US electric grid | Fly/bottom ash | model/secondary | 3.08e-05 | 5.67e-02 |
| Panel components | Waste LCD glass | primary | 2.30e-05 | 4.23e-02 |
| Natural Gas Prod. | Unspecified waste | secondary | 2.04e-05 | 3.75e-02 |
| Fuel Oil #4 Prod. | Slag and ash | secondary | 1.78e-05 | 3.29e-02 |
| Fuel Oil #6 Prod. | Slag and ash | secondary | 9.52e-06 | 1.75e-02 |
| Monitor/module | Printed wiring board (PWB) | primary | 9.38e-06 | 1.73e-02 |
| Fuel Oil #2 Prod. | Slag and ash | secondary | 5.07e-06 | 9.34e-03 |
| Fuel Oil #4 Prod. | Unspecified waste | secondary | 3.83e-06 | 7.07e-03 |
| Monitor/module | LCD panel waste | primary | 3.79e-06 | 6.98e-03 |
| Panel components | Used silica gel | primary | 2.14e-06 | 3.94e-03 |
| Fuel Oil #6 Prod. | Unspecified waste | secondary | 2.04e-06 | 3.77e-03 |
| Backlight | Waste backlight light guide (PMMA) | primary | 1.28e-06 | 2.35e-03 |
| Fuel Oil #2 Prod. | Unspecified waste | secondary | 1.09e-06 | 2.01e-03 |
| LCD glass mfg. | Potassium Carbonate | primary | 4.99e-07 | 9.19e-04 |
| LCD glass mfg. | Sodium Carbonate | primary | 4.51e-07 | 8.31e-04 |
| Fuel Oil #4 Prod. | Mixed industrial (waste) | secondary | 4.38e-07 | 8.07e-04 |
| LCD glass mfg. | Unspecified sludge | primary | 3.56e-07 | 6.56e-04 |
| LCD glass mfg. | Cinders from LCD glass mfg | primary | 3.19e-07 | 5.87e-04 |
| Fuel Oil #2 Prod. | Mixed industrial (waste) | secondary | 1.63e-07 | 3.00e-04 |
| Fuel Oil #6 Prod. | Mixed industrial (waste) | secondary | 1.44e-07 | 2.65e-04 |
| LCD glass mfg. | LCD glass EP dust | primary | 9.94e-08 | 1.83e-04 |
| LPG Production | Non toxic chemical waste (unspecified) | secondary | 6.49e-08 | 1.20e-04 |
| LPG Production | Mineral waste | secondary | 4.85e-08 | 8.94e-05 |
| LCD glass mfg. | Waste refractory | primary | 4.41e-08 | 8.13e-05 |
| Natural Gas Prod. | Mixed industrial (waste) | secondary | 3.96e-08 | 7.30e-05 |
| LCD glass mfg. | blasting media | primary | 3.78e-08 | 6.97e-05 |
| LCD glass mfg. | Waste LCD glass | primary | 3.48e-08 | 6.41e-05 |
| LCD glass mfg. | Oily rags & filter media | primary | 3.36e-08 | 6.19e-05 |
| LCD glass mfg. | Sludge from LCD glass mfg | primary | 2.99e-08 | 5.51e-05 |
| LCD glass mfg. | Plating process sludge | primary | 1.38e-08 | 2.54e-05 |
| Backlight | Waste backlight casing (PC) | primary | 5.41e-09 | 9.97e-06 |
| LCD glass mfg. | acid absorbent | primary | 4.71e-09 | 8.68e-06 |
| Fuel Oil #4 Prod. | Non toxic chemical waste (unspecified) | secondary | 4.76e-10 | 8.76e-07 |
| Fuel Oil #4 Prod. | Mineral waste | secondary | 3.55e-10 | 6.54e-07 |
| Fuel Oil #2 Prod. | Non toxic chemical waste (unspecified) | secondary | 1.77e-10 | 3.27e-07 |
| Fuel Oil #6 Prod. | Non toxic chemical waste (unspecified) | secondary | 1.56e-10 | 2.87e-07 |
| Fuel Oil #2 Prod. | Mineral waste | secondary | 1.32e-10 | 2.44e-07 |
| Fuel Oil #6 Prod. | Mineral waste | secondary | 1.16e-10 | 2.14e-07 |
| Natural Gas Prod. | Non toxic chemical waste (unspecified) | secondary | 4.31e-11 | 7.95e-08 |
| Natural Gas Prod. | Mineral waste | secondary | 3.22e-11 | 5.93e-08 |
| Backlight | Broken CCFL | primary | 1.98e-11 | 3.65e-08 |
| **Total Manufacturing** | | | **1.07e-02** | **1.97e+01** |
| **Use, Maintenance and Repair Life-cycle Stage** | | | | |
| US electric grid | Coal waste | model/secondary | 2.37e-02 | 4.37e+01 |
| US electric grid | Dust/sludge | model/secondary | 7.35e-03 | 1.35e+01 |

## Table M-8. LCD LCIA Results for the Solid Waste Landfill Use Impact Category

| Process Group | Material | LCI Data Type | Solid Waste landfill Use (m3) | % of Total |
|---|---|---|---|---|
| US electric grid | Fly/bottom ash | model/secondary | 5.93e-03 | 1.09e+01 |
| **Total Use, Maintenance and Repair** | | | **3.70e-02** | **6.82e+01** |
| **End-of-life Life-cycle Stage** | | | | |
| LCD landfilling | EOL LCD Monitor, landfilled | primary | 1.90e-03 | 3.50e+00 |
| US electric grid | Coal waste | model/secondary | 4.50e-06 | 8.29e-03 |
| US electric grid | Dust/sludge | model/secondary | 1.39e-06 | 2.57e-03 |
| US electric grid | Fly/bottom ash | model/secondary | 1.12e-06 | 2.07e-03 |
| LCD landfilling | Unspecified solid waste | primary | 1.05e-06 | 1.93e-03 |
| LCD incineration | Mixed industrial (waste) | secondary | 3.28e-07 | 6.04e-04 |
| LPG Production | Slag and ash | secondary | 1.36e-07 | 2.51e-04 |
| LPG Production | Unspecified waste | secondary | 2.93e-08 | 5.40e-05 |
| LPG Production | Mixed industrial (waste) | secondary | 4.90e-09 | 9.02e-06 |
| LPG Production | Non toxic chemical waste (unspecified) | secondary | 5.33e-12 | 9.82e-09 |
| LPG Production | Mineral waste | secondary | 3.98e-12 | 7.34e-09 |
| Natural Gas Prod. | Mineral waste | secondary | -6.76e-12 | -1.25e-08 |
| Natural Gas Prod. | Non toxic chemical waste (unspecified) | secondary | -9.06e-12 | -1.67e-08 |
| LCD incineration | Mineral waste | secondary | -1.03e-10 | -1.90e-07 |
| LCD incineration | Non toxic chemical waste (unspecified) | secondary | -1.38e-10 | -2.54e-07 |
| Fuel Oil #4 Prod. | Mineral waste | secondary | -1.64e-09 | -3.02e-06 |
| Fuel Oil #4 Prod. | Non toxic chemical waste (unspecified) | secondary | -2.19e-09 | -4.04e-06 |
| LCD incineration | Mining waste | secondary | -2.74e-09 | -5.06e-06 |
| Natural Gas Prod. | Mixed industrial (waste) | secondary | -8.32e-09 | -1.53e-05 |
| Fuel Oil #4 Prod. | Mixed industrial (waste) | secondary | -2.02e-06 | -3.72e-03 |
| Natural Gas Prod. | Unspecified waste | secondary | -4.28e-06 | -7.88e-03 |
| Fuel Oil #4 Prod. | Unspecified waste | secondary | -1.77e-05 | -3.26e-02 |
| Natural Gas Prod. | Slag and ash | secondary | -1.99e-05 | -3.67e-02 |
| Fuel Oil #4 Prod. | Slag and ash | secondary | -8.22e-05 | -1.52e-01 |
| LCD incineration | Unspecified solid waste | secondary | -1.14e-03 | -2.10e+00 |
| LCD incineration | Slag and ash | secondary | -4.99e-03 | -9.19e+00 |
| **Total End-of-life** | | | **-4.35e-03** | **-8.01e+00** |
| **Total All Life-cycle Stages** | | | **5.43e-02** | **1.00e+02** |

## Table M-9. CRT LCIA Results for the Hazardous Waste Landfill Use Impact Category

| Process Group | Material | LCI Data Type | Hazardous Waste Landfill Use (m3) | % of Total |
|---|---|---|---|---|
| **Materials Processing Life-cycle Stage** | | | | |
| Invar | General Hazardous Waste | secondary | 3.92e-05 | 2.33e-01 |
| Ferrite mfg. | General Hazardous Waste | secondary | 3.82e-05 | 2.28e-01 |
| Polycarbonate Production | General Hazardous Waste | secondary | 2.06e-05 | 1.23e-01 |
| ABS Production | General Hazardous Waste | secondary | 9.45e-06 | 5.62e-02 |
| Styrene-butadiene Copolymer Prod. | Hazardous waste | secondary | 8.58e-07 | 5.11e-03 |
| Steel Prod., cold-rolled, semi-finished | General Hazardous Waste | secondary | 4.35e-07 | 2.59e-03 |
| Polystyrene Prod., high-impact | General Hazardous Waste | secondary | 2.70e-07 | 1.60e-03 |
| **Total Materials Processing** | | | **1.09e-04** | **6.49e-01** |
| **Manufacturing Life-cycle Stage** | | | | |
| LPG Production | Hazardous waste | secondary | 1.36e-03 | 8.11e+00 |
| Glass/frit | Hydrofluoric acid | primary | 1.34e-05 | 7.98e-02 |
| Glass/frit | cinders from CRT glass mfg (70% PbO) | primary | 6.88e-06 | 4.09e-02 |
| CRT tube mfg. | Unspecified sludge | primary | 5.22e-06 | 3.11e-02 |
| Fuel Oil #6 Prod. | Hazardous waste | secondary | 4.61e-06 | 2.74e-02 |
| Fuel Oil #2 Prod. | Hazardous waste | secondary | 3.82e-06 | 2.27e-02 |
| CRT tube mfg. | Frit | primary | 3.04e-06 | 1.81e-02 |
| CRT tube mfg. | Carbon and filmer waste | primary | 2.30e-06 | 1.37e-02 |
| Glass/frit | CRT glass faceplate EP dust (Pb) (D008 waste) | primary | 2.15e-06 | 1.28e-02 |
| CRT tube mfg. | Slurry scrap (chromium-based) | primary | 1.60e-06 | 9.52e-03 |
| Glass/frit | Hazardous sludge (Pb) (D008) | primary | 1.38e-06 | 8.21e-03 |
| CRT tube mfg. | Slag and ash | primary | 1.30e-06 | 7.74e-03 |
| CRT tube mfg. | Waste water treatment (WWT) filters | primary | 7.59e-07 | 4.52e-03 |
| Glass/frit | sludge from CRT glass mfg (1% PbO) | primary | 6.45e-07 | 3.84e-03 |
| Glass/frit | Broken CRT glass | primary | 6.22e-07 | 3.70e-03 |
| Glass/frit | Barium debris (D008 waste) | primary | 4.58e-07 | 2.72e-03 |
| Fuel Oil #4 Prod. | Hazardous waste | secondary | 3.11e-07 | 1.85e-03 |
| Glass/frit | Waste finishing sludge (Pb) (D008 waste) | primary | 2.32e-07 | 1.38e-03 |
| Glass/frit | Waste Batch (Ba, Pb) (D008 waste) | primary | 1.22e-07 | 7.28e-04 |
| CRT tube mfg. | Lead sulfate cake | primary | 3.03e-08 | 1.80e-04 |
| Natural Gas Prod. | Hazardous waste | secondary | 2.75e-08 | 1.64e-04 |
| Glass/frit | Lead debris (D008 waste) | primary | 1.85e-08 | 1.10e-04 |
| Glass/frit | Lead contaminated grit (D008 waste) | primary | 2.99e-09 | 1.78e-05 |
| **Total Manufacturing** | | | **1.41e-03** | **8.40e+00** |
| **Use, Maintenance and Repair Life-cycle Stage** | | | | |
| **Total Use, Maintenance and Repair** | | | **0.00e+00** | **0.00e+00** |
| **End-of-life Life-cycle Stage** | | | | |
| CRT landfilling | EOL CRT Monitor, landfilled | primary | 1.53e-02 | 9.10e+01 |
| LPG Production | Hazardous waste | secondary | 1.18e-08 | 7.00e-05 |
| Natural Gas Prod. | Hazardous waste | secondary | -1.38e-08 | -8.22e-05 |
| CRT Incineration | General Hazardous Waste | secondary | -2.14e-07 | -1.28e-03 |
| Fuel Oil #4 Prod. | Hazardous waste | secondary | -3.34e-06 | -1.99e-02 |
| **Total End-of-life** | | | **1.53e-02** | **9.10e+01** |
| **Total All Life-cycle Stages** | | | **1.68e-02** | **1.00e+02** |

## Table M-10. LCD LCIA Results for the Hazardous Waste Landfill Use Impact Category

| Process Group | Material | LCI Data Type | Hazardous Waste Landfill Use (m3) | % of Total |
|---|---|---|---|---|
| **Materials Processing Life-cycle Stage** | | | | |
| Polycarbonate Production | General Hazardous Waste | secondary | 1.15e-05 | 3.18e-01 |
| Natural Gas Prod. | Hazardous waste | secondary | 1.92e-06 | 5.33e-02 |
| PMMA Sheet Prod. | General Hazardous Waste | secondary | 9.41e-07 | 2.60e-02 |
| Styrene-butadiene Copolymer Prod. | Hazardous waste | secondary | 3.75e-07 | 1.04e-02 |
| Steel Prod., cold-rolled, semi-finished | General Hazardous Waste | secondary | 2.13e-07 | 5.90e-03 |
| PET Resin Production | Unspecified hazardous waste | secondary | 3.24e-08 | 8.96e-04 |
| **Total Materials Processing** | | | **1.50e-05** | **4.15e-01** |
| **Manufacturing Life-cycle Stage** | | | | |
| LPG Production | Hazardous waste | secondary | 6.54e-05 | 1.81e+00 |
| Monitor/module | Acetic acid | primary | 3.18e-05 | 8.80e-01 |
| Monitor/module | Phosphoric acid | primary | 8.55e-06 | 2.37e-01 |
| LCD glass mfg. | Hydrofluoric acid | primary | 6.21e-07 | 1.72e-02 |
| Fuel Oil #4 Prod. | Hazardous waste | secondary | 4.79e-07 | 1.33e-02 |
| Monitor/module | Nitric acid | primary | 2.48e-07 | 6.87e-03 |
| Fuel Oil #2 Prod. | Hazardous waste | secondary | 1.78e-07 | 4.94e-03 |
| Fuel Oil #6 Prod. | Hazardous waste | secondary | 1.57e-07 | 4.34e-03 |
| Natural Gas Prod. | Hazardous waste | secondary | 4.34e-08 | 1.20e-03 |
| LCD glass mfg. | Barium debris (D008 waste) | primary | 2.12e-08 | 5.87e-04 |
| LCD glass mfg. | Waste Batch (Ba, Pb) (D008 waste) | primary | 5.67e-09 | 1.57e-04 |
| Backlight | Waste glass, with mercury | primary | 7.73e-15 | 2.14e-10 |
| **Total Manufacturing** | | | **1.07e-04** | **2.98e+00** |
| **Use, Maintenance and Repair Life-cycle Stage** | | | | |
| **Total Use, Maintenance and Repair** | | | **0.00e+00** | **0.00e+00** |
| **End-of-life Life-cycle Stage** | | | | |
| LCD landfilling | EOL LCD Monitor, landfilled | primary | 3.49e-03 | 9.67e+01 |
| LPG Production | Hazardous waste | secondary | 5.37e-09 | 1.49e-04 |
| Natural Gas Prod. | Hazardous waste | secondary | -9.12e-09 | -2.52e-04 |
| LCD incineration | General Hazardous Waste | secondary | -1.39e-07 | -3.84e-03 |
| Fuel Oil #4 Prod. | Hazardous waste | secondary | -2.21e-06 | -6.11e-02 |
| **Total End-of-life** | | | **3.49e-03** | **9.66e+01** |
| **Total All Life-cycle Stages** | | | **3.61e-03** | **1.00e+02** |

## Table M-11. CRT LCIA Results for the Radioactive Waste Landfill Use Impact Category

| Process Group | Material | LCI Data Type | Radioactive Waste Landfill Use (m3) | % of Total |
|---|---|---|---|---|
| **Materials Processing Life-cycle Stage** | | | | |
| Steel Prod., cold-rolled, semi-finished | Low-level radioactive waste | secondary | 1.64e-05 | 9.03e+00 |
| Invar | Low-level radioactive waste | secondary | 4.72e-06 | 2.60e+00 |
| Ferrite mfg. | Low-level radioactive waste | secondary | 4.61e-06 | 2.54e+00 |
| Steel Prod., cold-rolled, semi-finished | Radioactive waste (unspecified) | secondary | 7.36e-07 | 4.06e-01 |
| Steel Prod., cold-rolled, semi-finished | Highly radioactive waste (Class C) | secondary | 3.46e-07 | 1.91e-01 |
| Invar | Radioactive waste (unspecified) | secondary | 2.20e-07 | 1.22e-01 |
| Ferrite mfg. | Radioactive waste (unspecified) | secondary | 2.15e-07 | 1.19e-01 |
| Invar | Highly radioactive waste (Class C) | secondary | 9.80e-08 | 5.41e-02 |
| Ferrite mfg. | Highly radioactive waste (Class C) | secondary | 9.57e-08 | 5.28e-02 |
| **Total Materials Processing** | | | **2.74e-05** | **1.51e+01** |
| **Manufacturing Life-cycle Stage** | | | | |
| Japanese Electric Grid | Low-level radioactive waste | model/secondary | 6.89e-06 | 3.80e+00 |
| Japanese Electric Grid | Uranium, depleted | model/secondary | 2.07e-06 | 1.14e+00 |
| US electric grid | Low-level radioactive waste | model/secondary | 1.75e-06 | 9.66e-01 |
| US electric grid | Uranium, depleted | model/secondary | 5.25e-07 | 2.90e-01 |
| **Total Manufacturing** | | | **1.12e-05** | **6.19e+00** |
| **Use, Maintenance and Repair Life-cycle Stage** | | | | |
| US electric grid | Low-level radioactive waste | model/secondary | 1.10e-04 | 6.05e+01 |
| US electric grid | Uranium, depleted | model/secondary | 3.29e-05 | 1.82e+01 |
| **Total use, Maintenance and Repair** | | | **1.43e-04** | **7.87e+01** |
| **End-of-life Life-cycle Stage** | | | | |
| US electric grid | Low-level radioactive waste | model/secondary | 1.10e-08 | 6.06e-03 |
| US electric grid | Uranium, depleted | model/secondary | 3.29e-09 | 1.82e-03 |
| **Total End-of-life** | | | **1.43e-08** | **7.87e-03** |
| **Total All Life-cycle Stages** | | | **1.81e-04** | **1.00e+02** |

## Table M-12. LCD LCIA Results for the Radioactive Waste Landfill Use Impact Category

| Process Group | Material | LCI Data Type | Radioactive Waste Landfill Use (m3) | % of Total |
|---|---|---|---|---|
| **Materials Processing Life-cycle Stage** | | | | |
| Steel Prod., cold-rolled, semi-finished | Low-level radioactive waste | secondary | 8.02e-06 | 8.70e+00 |
| Steel Prod., cold-rolled, semi-finished | Radioactive waste (unspecified) | secondary | 3.61e-07 | 3.91e-01 |
| Steel Prod., cold-rolled, semi-finished | Highly radioactive waste (Class C) | secondary | 1.70e-07 | 1.84e-01 |
| **Total Materials Processing** | | | **8.55e-06** | **9.28e+00** |
| **Manufacturing Life-cycle Stage** | | | | |
| Japanese Electric Grid | Low-level radioactive waste | model/secondary | 2.32e-05 | 2.51e+01 |
| Japanese Electric Grid | Uranium, depleted | model/secondary | 6.95e-06 | 7.54e+00 |
| US electric grid | Low-level radioactive waste | model/secondary | 2.12e-07 | 2.30e-01 |
| US electric grid | Uranium, depleted | model/secondary | 6.37e-08 | 6.91e-02 |
| **Total Manufacturing** | | | **3.04e-05** | **3.30e+01** |
| **Use, Maintenance and Repair Life-cycle Stage** | | | | |
| US electric grid | Low-level radioactive waste | model/secondary | 4.10e-05 | 4.44e+01 |
| US electric grid | Uranium, depleted | model/secondary | 1.23e-05 | 1.33e+01 |
| **Total use, Maintenance and Repair** | | | **5.32e-05** | **5.77e+01** |
| **End-of-life Life-cycle Stage** | | | | |
| US electric grid | Low-level radioactive waste | model/secondary | 7.77e-09 | 8.43e-03 |
| US electric grid | Uranium, depleted | model/secondary | 2.33e-09 | 2.53e-03 |
| **Total End-of-life** | | | **1.01e-08** | **1.10e-02** |
| **Total All Life-cycle Stages** | | | **9.22e-05** | **1.00e+02** |

## Table M-13. CRT LCIA Results for the Global Warming Impact Category

| Process Group | Material | LCI Data Type | Global Warming Potential (kg-Co2 Equivalents) | % of Total |
|---|---|---|---|---|
| **Materials Processing Life-cycle Stage** | | | | |
| Steel Prod., cold-rolled, semi-finished | Carbon dioxide | secondary | 1.34e+01 | 1.93e+00 |
| Polycarbonate Production | Carbon dioxide | secondary | 4.62e+00 | 6.64e-01 |
| Aluminum Prod. | Carbon dioxide | secondary | 3.59e+00 | 5.16e-01 |
| Invar | Carbon dioxide | secondary | 2.26e+00 | 3.25e-01 |
| Styrene-butadiene Copolymer Prod. | Carbon dioxide | secondary | 1.65e+00 | 2.38e-01 |
| ABS Production | Carbon dioxide | secondary | 1.31e+00 | 1.89e-01 |
| Lead | Carbon dioxide | secondary | 1.07e+00 | 1.54e-01 |
| Aluminum Prod. | Perfluoromethane | secondary | 8.42e-01 | 1.21e-01 |
| Ferrite mfg. | Carbon dioxide | secondary | 8.32e-01 | 1.20e-01 |
| Polycarbonate Production | Methane | secondary | 4.27e-01 | 6.13e-02 |
| Polystyrene Prod., high-impact | Carbon dioxide | secondary | 4.23e-01 | 6.09e-02 |
| Steel Prod., cold-rolled, semi-finished | Nitrous oxide | secondary | 2.41e-01 | 3.46e-02 |
| Steel Prod., cold-rolled, semi-finished | Methane | secondary | 2.29e-01 | 3.29e-02 |
| Aluminum Prod. | Methane | secondary | 1.69e-01 | 2.43e-02 |
| Styrene-butadiene Copolymer Prod. | Methane | secondary | 1.44e-01 | 2.07e-02 |
| Aluminum Prod. | Perfluoroethane | secondary | 1.32e-01 | 1.90e-02 |
| Invar | Methane | secondary | 1.21e-01 | 1.74e-02 |
| ABS Production | Methane | secondary | 1.07e-01 | 1.53e-02 |
| Ferrite mfg. | Methane | secondary | 5.99e-02 | 8.62e-03 |
| Lead | Methane | secondary | 5.29e-02 | 7.61e-03 |
| Aluminum Prod. | Nitrous oxide | secondary | 4.28e-02 | 6.16e-03 |
| Polystyrene Prod., high-impact | Methane | secondary | 3.49e-02 | 5.02e-03 |
| Lead | Nitrous oxide | secondary | 6.29e-03 | 9.05e-04 |
| Ferrite mfg. | Nitrous oxide | secondary | 3.29e-03 | 4.73e-04 |
| Polycarbonate Production | Nitrous oxide | secondary | 1.43e-04 | 2.06e-03 |
| ABS Production | Nitrous oxide | secondary | 6.56e-05 | 9.44e-06 |
| Styrene-butadiene Copolymer Prod. | Nitrous oxide | secondary | 6.41e-05 | 9.22e-06 |
| Invar | Perfluoromethane | secondary | 1.85e-05 | 2.67e-06 |
| Ferrite mfg. | Perfluoromethane | secondary | 1.81e-05 | 2.60e-06 |
| Invar | Nitrous oxide | secondary | 1.50e-05 | 2.16e-06 |
| Invar | HFC-125 | secondary | 6.43e-06 | 9.25e-07 |
| Ferrite mfg. | HFC-125 | secondary | 6.28e-06 | 9.03e-07 |
| Steel Prod., cold-rolled, semi-finished | Perfluoromethane | secondary | 2.92e-07 | 4.20e-08 |
| Invar | Perfluoroethane | secondary | 4.92e-08 | 7.08e-09 |
| **Total Materials Processing** | | | **3.18e+01** | **4.57e+00** |
| **Manufacturing Life-cycle Stage** | | | | |
| LPG Production | Carbon dioxide | secondary | 1.51e+02 | 2.17e+01 |
| LPG Production | Methane | secondary | 1.76e+01 | 2.53e+00 |
| Japanese Electric Grid | Carbon dioxide | model/secondary | 1.54e+01 | 2.21e+00 |
| US electric grid | Carbon dioxide | model/secondary | 7.10e+00 | 1.02e+00 |
| LPG Production | Nitrous oxide | secondary | 5.03e+00 | 7.23e-01 |
| Glass/frit | Carbon dioxide | primary | 2.81e+00 | 4.04e-01 |
| Natural Gas Prod. | Carbon dioxide | secondary | 1.32e+00 | 1.90e-01 |
| Natural Gas Prod. | Methane | secondary | 1.05e+00 | 1.51e-01 |
| Fuel Oil #6 Prod. | Carbon dioxide | secondary | 8.51e-01 | 1.22e-01 |
| Fuel Oil #2 Prod. | Carbon dioxide | secondary | 4.48e-01 | 6.44e-02 |
| US electric grid | Methane | model/secondary | 2.16e-01 | 3.11e-02 |
| Fuel Oil #6 Prod. | Methane | secondary | 1.24e-01 | 1.78e-02 |
| Fuel Oil #2 Prod. | Methane | secondary | 5.40e-02 | 7.76e-03 |

## Table M-13. CRT LCIA Results for the Global Warming Impact Category

| Process Group | Material | LCI Data Type | Global Warming Potential (kg-Co2 Equivalents) | % of Total |
|---|---|---|---|---|
| Fuel Oil #6 Prod. | Nitrous oxide | secondary | 4.50e-02 | 6.47e-03 |
| Glass/frit | Carbon dioxide | primary | 4.33e-02 | 6.23e-03 |
| Fuel Oil #4 Prod. | Carbon dioxide | secondary | 4.22e-02 | 6.06e-03 |
| Japanese Electric Grid | Nitrous oxide | model/secondary | 3.46e-02 | 4.98e-03 |
| US electric grid | Nitrous oxide | model/secondary | 1.68e-02 | 2.42e-03 |
| Fuel Oil #2 Prod. | Nitrous oxide | secondary | 1.61e-02 | 2.31e-03 |
| Fuel Oil #4 Prod. | Methane | secondary | 5.47e-03 | 7.87e-04 |
| Natural Gas Prod. | Nitrous oxide | secondary | 3.58e-03 | 5.15e-04 |
| Fuel Oil #4 Prod. | Nitrous oxide | secondary | 1.78e-03 | 2.56e-04 |
| Japanese Electric Grid | Methane | model/secondary | 1.71e-03 | 2.46e-04 |
| **Total Manufacturing** | | | **2.03e+02** | **2.92e+01** |
| **Use, Maintenance and Repair Life-cycle Stage** | | | | |
| US electric grid | Carbon dioxide | model/secondary | 4.45e+02 | 6.39e+01 |
| US electric grid | Methane | model/secondary | 1.35e+01 | 1.95e+00 |
| US electric grid | Nitrous oxide | model/secondary | 1.05e+00 | 1.51e-01 |
| **Total Use, Maintenance and Repair** | | | **4.59e+02** | **6.60e+01** |
| **End-of-life Life-cycle Stage** | | | | |
| CRT Incineration | Carbon dioxide | secondary | 3.55e+00 | 5.11e-01 |
| CRT landfilling | Carbon dioxide | primary | 1.03e-01 | 1.49e-02 |
| US electric grid | Carbon dioxide | model/secondary | 4.45e-02 | 6.40e-03 |
| US electric grid | Methane | model/secondary | 1.35e-03 | 1.95e-04 |
| LPG Production | Carbon dioxide | secondary | 1.30e-03 | 1.87e-04 |
| CRT landfilling | Methane | primary | 1.14e-03 | 1.64e-04 |
| LPG Production | Methane | secondary | 1.52e-04 | 2.19e-05 |
| US electric grid | Nitrous oxide | model/secondary | 1.05e-04 | 1.52e-05 |
| LPG Production | Nitrous oxide | secondary | 4.34e-05 | 6.24e-06 |
| Natural Gas Prod. | Nitrous oxide | secondary | -1.80e-03 | -2.58e-04 |
| Fuel Oil #4 Prod. | Nitrous oxide | secondary | -1.92e-02 | -2.75e-03 |
| Fuel Oil #4 Prod. | Methane | secondary | -5.88e-02 | -8.46e-03 |
| CRT Incineration | Methane | secondary | -3.18e-01 | -4.57e-02 |
| CRT Incineration | Nitrous oxide | secondary | -3.23e-01 | -4.64e-02 |
| Fuel Oil #4 Prod. | Carbon dioxide | secondary | -4.53e-01 | -6.52e-02 |
| Natural Gas Prod. | Methane | secondary | -5.28e-01 | -7.60e-02 |
| Natural Gas Prod. | Carbon dioxide | secondary | -6.63e-01 | -9.54e-02 |
| **Total End-of-life** | | | **1.34e+00** | **1.93e-01** |
| **Total All Life-cycle Stages** | | | **6.95e+02** | **1.00e+02** |

## Table M-14. LCD LCIA Results for the Global Warming Impact Category

| Process Group | Material | LCI Data Type | Global Warming Potential (kg-Co2 Equivalents) | % of Total |
|---|---|---|---|---|
| **Materials Processing Life-cycle Stage** | | | | |
| Natural Gas Prod. | Carbon dioxide | secondary | 9.24e+01 | 1.56e+01 |
| Natural Gas Prod. | Methane | secondary | 7.36e+01 | 1.24e+01 |
| Steel Prod., cold-rolled, semi-finished | Carbon dioxide | secondary | 6.58e+00 | 1.11e+00 |
| PMMA Sheet Prod. | Carbon dioxide | secondary | 2.65e+00 | 4.46e-01 |
| Polycarbonate Production | Carbon dioxide | secondary | 2.58e+00 | 4.35e-01 |
| Aluminum Prod. | Carbon dioxide | secondary | 1.34e+00 | 2.25e-01 |
| Styrene-butadiene Copolymer Prod. | Carbon dioxide | secondary | 7.23e-01 | 1.22e-01 |
| PET Resin Production | Carbon dioxide | secondary | 3.90e-01 | 6.58e-02 |
| Aluminum Prod. | Perfluoromethane | secondary | 3.14e-01 | 5.29e-02 |
| Natural Gas Prod. | Nitrous oxide | secondary | 2.50e-01 | 4.22e-02 |
| PMMA Sheet Prod. | Methane | secondary | 2.42e-01 | 4.07e-02 |
| Polycarbonate Production | Methane | secondary | 2.38e-01 | 4.02e-02 |
| Steel Prod., cold-rolled, semi-finished | Nitrous oxide | secondary | 1.18e-01 | 1.99e-02 |
| Steel Prod., cold-rolled, semi-finished | Methane | secondary | 1.12e-01 | 1.89e-02 |
| Styrene-butadiene Copolymer Prod. | Methane | secondary | 6.30e-02 | 1.06e-02 |
| Aluminum Prod. | Methane | secondary | 6.29e-02 | 1.06e-02 |
| Aluminum Prod. | Perfluoroethane | secondary | 4.93e-02 | 8.31e-03 |
| PET Resin Production | Methane | secondary | 2.10e-02 | 3.53e-03 |
| Aluminum Prod. | Nitrous oxide | secondary | 1.59e-02 | 2.69e-03 |
| Polycarbonate Production | Nitrous oxide | secondary | 7.99e-05 | 1.35e-05 |
| PMMA Sheet Prod. | Nitrous oxide | secondary | 5.94e-05 | 1.00e-05 |
| PET Resin Production | Nitrous oxide | secondary | 2.81e-05 | 4.74e-06 |
| Styrene-butadiene Copolymer Prod. | Nitrous oxide | secondary | 2.80e-05 | 4.73e-06 |
| Steel Prod., cold-rolled, semi-finished | Perfluoromethane | secondary | 1.43e-07 | 2.41e-08 |
| **Total Materials Processing** | | | **1.82e+02** | **3.06e+01** |
| **Manufacturing Life-cycle Stage** | | | | |
| Monitor/module | Sulfur hexafluoride | primary | 1.74e+02 | 2.94e+01 |
| Japanese Electric Grid | Carbon dioxide | model/secondary | 5.18e+01 | 8.72e+00 |
| LPG Production | Carbon dioxide | secondary | 7.24e+00 | 1.22e+00 |
| Natural Gas Prod. | Carbon dioxide | secondary | 2.09e+00 | 3.51e-01 |
| Natural Gas Prod. | Methane | secondary | 1.66e+00 | 2.80e-01 |
| US electric grid | Carbon dioxide | model/secondary | 8.61e-01 | 1.45e-01 |
| LPG Production | Methane | secondary | 8.45e-01 | 1.42e-01 |
| LPG Production | Nitrous oxide | secondary | 2.41e-01 | 4.07e-02 |
| LCD glass mfg. | Carbon dioxide | primary | 1.30e-01 | 2.19e-02 |
| Japanese Electric Grid | Nitrous oxide | model/secondary | 1.17e-01 | 1.96e-02 |
| Fuel Oil #4 Prod. | Carbon dioxide | secondary | 6.50e-02 | 1.10e-02 |
| Fuel Oil #6 Prod. | Carbon dioxide | secondary | 2.90e-02 | 4.88e-03 |
| US electric grid | Methane | model/secondary | 2.62e-02 | 4.42e-03 |
| Fuel Oil #2 Prod. | Carbon dioxide | secondary | 2.09e-02 | 3.52e-03 |
| Fuel Oil #4 Prod. | Methane | secondary | 8.43e-03 | 1.42e-03 |
| Japanese Electric Grid | Methane | model/secondary | 5.74e-03 | 9.68e-04 |
| Natural Gas Prod. | Nitrous oxide | secondary | 5.64e-03 | 9.51e-04 |
| Panel components | Carbon dioxide | primary | 4.82e-03 | 8.12e-04 |
| Fuel Oil #6 Prod. | Methane | secondary | 4.21e-03 | 7.10e-04 |
| Fuel Oil #4 Prod. | Nitrous oxide | secondary | 2.75e-03 | 4.63e-04 |
| Fuel Oil #2 Prod. | Methane | secondary | 2.52e-03 | 4.24e-04 |
| Monitor/module | Carbon dioxide | primary | 2.16e-03 | 3.64e-04 |

## Table M-14. LCD LCIA Results for the Global Warming Impact Category

| Process Group | Material | LCI Data Type | Global Warming Potential (kg-Co2 Equivalents) | % of Total |
|---|---|---|---|---|
| US electric grid | Nitrous oxide | model/secondary | 2.04e-03 | 3.44e-04 |
| Fuel Oil #6 Prod. | Nitrous oxide | secondary | 1.53e-03 | 2.58e-04 |
| Fuel Oil #2 Prod. | Nitrous oxide | secondary | 7.50e-04 | 1.26e-04 |
| **Total Manufacturing** | | | **2.40e+02** | **4.04e+01** |
| **Use, Maintenance and Repair Life-cycle Stage** | | | | |
| US electric grid | Carbon dioxide | model/secondary | 1.66e+02 | 2.80e+01 |
| US electric grid | Methane | model/secondary | 5.05e+00 | 8.52e-01 |
| US electric grid | Nitrous oxide | model/secondary | 3.93e-01 | 6.63e-02 |
| **Total Use, Maintenance and Repair** | | | **1.71e+02** | **2.89e+01** |
| **End-of-life Life-cycle Stage** | | | | |
| LCD incineration | Carbon dioxide | secondary | 2.07e+00 | 3.48e-01 |
| US electric grid | Carbon dioxide | model/secondary | 3.15e-02 | 5.31e-03 |
| LCD landfilling | Carbon dioxide | primary | 2.49e-02 | 4.20e-03 |
| US electric grid | Methane | model/secondary | 9.59e-04 | 1.62e-04 |
| LPG Production | Carbon dioxide | secondary | 5.95e-04 | 1.00e-04 |
| LCD landfilling | Methane | primary | 2.75e-04 | 4.64e-05 |
| US electric grid | Nitrous oxide | model/secondary | 7.46e-05 | 1.26e-05 |
| LPG Production | Methane | secondary | 6.94e-05 | 1.17e-05 |
| LPG Production | Nitrous oxide | secondary | 1.98e-05 | 3.34e-06 |
| Natural Gas Prod. | Nitrous oxide | secondary | -1.19e-03 | -2.00e-04 |
| Fuel Oil #4 Prod. | Nitrous oxide | secondary | -1.27e-02 | -2.13e-03 |
| Fuel Oil #4 Prod. | Methane | secondary | -3.89e-02 | -6.55e-03 |
| LCD incineration | Methane | secondary | -2.07e-01 | -3.49e-02 |
| LCD incineration | Nitrous oxide | secondary | -2.09e-01 | -3.53e-02 |
| Fuel Oil #4 Prod. | Carbon dioxide | secondary | -2.99e-01 | -5.05e-02 |
| Natural Gas Prod. | Methane | secondary | -3.49e-01 | -5.88e-02 |
| Natural Gas Prod. | Carbon dioxide | secondary | -4.38e-01 | -7.38e-02 |
| **Total End-of-life** | | | **5.70e-01** | **9.60e-02** |
| **Total All Life-cycle Stages** | | | **5.93e+02** | **1.00e+02** |

## Table M-15. CRT LCIA Results for the Stratospheric Ozone Depletion Impact Category

| Process Group | Materials | LCI Data Type | Ozone Depletion (kg CFC-11 Equivalents) | % of Total |
|---|---|---|---|---|
| **Materials Processing Life-cycle Stage** | | | | |
| ABS Production | HALON-1301 | secondary | 4.10e-06 | 2.00e+01 |
| Aluminum Prod. | HALON-1301 | secondary | 2.89e-06 | 1.41e+01 |
| Invar | HALON-1301 | secondary | 1.22e-06 | 5.93e+00 |
| Lead | HALON-1301 | secondary | 5.42e-07 | 2.65e+00 |
| Steel Prod., cold-rolled, semi-finished | HALON-1301 | secondary | 4.03e-07 | 1.97e+00 |
| Ferrite mfg. | HALON-1301 | secondary | 1.52e-07 | 7.43e-01 |
| Invar | Dichlorodifluoromethane | secondary | 8.02e-10 | 3.92e-03 |
| Invar | CFC-13 | secondary | 5.04e-10 | 2.46e-03 |
| ABS Production | HCFC-22 | secondary | 1.46e-10 | 7.14e-04 |
| Ferrite mfg. | Dichlorodifluoromethane | secondary | 5.94e-17 | 2.90e-10 |
| Ferrite mfg. | CFC-13 | secondary | 3.74e-17 | 1.83e-10 |
| Invar | HCFC-22 | secondary | 3.68e-18 | 1.80e-11 |
| Ferrite mfg. | HCFC-22 | secondary | 3.59e-18 | 1.75e-11 |
| **Total Materials Processing** | | | **9.30e-06** | **4.54e+01** |
| **Manufacturing Life-cycle Stage** | | | | |
| LPG Production | Bromomethane | secondary | 7.49e-07 | 3.66e+00 |
| US electric grid | Bromomethane | model/secondary | 1.60e-07 | 7.83e-01 |
| Japanese Electric Grid | Bromomethane | model/secondary | 1.28e-07 | 6.25e-01 |
| LPG Production | 1,1,1-Trichloroethane | secondary | 1.61e-08 | 7.84e-02 |
| LPG Production | HALON-1301 | secondary | 8.12e-09 | 3.96e-02 |
| Japanese Electric Grid | 1,1,1-Trichloroethane | model/secondary | 7.76e-09 | 3.79e-02 |
| Fuel Oil #6 Prod. | Bromomethane | secondary | 6.05e-09 | 2.95e-02 |
| US electric grid | 1,1,1-Trichloroethane | model/secondary | 3.67e-09 | 1.79e-02 |
| Fuel Oil #2 Prod. | Bromomethane | secondary | 2.35e-09 | 1.15e-02 |
| Natural Gas Prod. | Bromomethane | secondary | 1.30e-09 | 6.34e-03 |
| Fuel Oil #4 Prod. | Bromomethane | secondary | 2.51e-10 | 1.22e-03 |
| Fuel Oil #6 Prod. | 1,1,1-Trichloroethane | secondary | 1.30e-10 | 6.32e-04 |
| Fuel Oil #2 Prod. | 1,1,1-Trichloroethane | secondary | 5.04e-11 | 2.46e-04 |
| Natural Gas Prod. | 1,1,1-Trichloroethane | secondary | 2.79e-11 | 1.36e-04 |
| Fuel Oil #6 Prod. | HALON-1301 | secondary | 2.75e-11 | 1.34e-04 |
| Fuel Oil #2 Prod. | HALON-1301 | secondary | 2.28e-11 | 1.11e-04 |
| Fuel Oil #4 Prod. | 1,1,1-Trichloroethane | secondary | 5.37e-12 | 2.62e-05 |
| Fuel Oil #4 Prod. | HALON-1301 | secondary | 1.85e-12 | 9.04e-06 |
| Natural Gas Prod. | HALON-1301 | secondary | 1.64e-13 | 8.01e-07 |
| **Total Manufacturing** | | | **1.08e-06** | **5.29e+00** |
| **Use, Maintenance and Repair Life-cycle Stage** | | | | |
| US electric grid | Bromomethane | model/secondary | 1.00e-05 | 4.90e+01 |
| US electric grid | 1,1,1-Trichloroethane | model/secondary | 2.30e-07 | 1.12e+00 |
| **Total Use, Maintenance and Repair** | | | **1.03e-05** | **5.01e+01** |
| **End-of-life Life-cycle Stage** | | | | |
| CRT Incineration | Carbon tetrachloride | secondary | 1.61e-09 | 7.88e-03 |
| CRT landfilling | Carbon tetrachloride | primary | 1.51e-09 | 7.35e-03 |
| US electric grid | Bromomethane | model/secondary | 1.00e-09 | 4.91e-03 |
| US electric grid | 1,1,1-Trichloroethane | model/secondary | 2.30e-11 | 1.12e-04 |
| LPG Production | Bromomethane | secondary | 6.47e-12 | 3.16e-05 |
| LPG Production | 1,1,1-Trichloroethane | secondary | 1.39e-13 | 6.77e-07 |
| LPG Production | HALON-1301 | secondary | 7.01e-14 | 3.42e-07 |
| Natural Gas Prod. | HALON-1301 | secondary | -8.23e-14 | -4.02e-07 |

## Table M-15. CRT LCIA Results for the Stratospheric Ozone Depletion Impact Category

| Process Group | Materials | LCI Data Type | Ozone Depletion (kg CFC-11 Equivalents) | % of Total |
|---|---|---|---|---|
| CRT Incineration | HALON-1301 | secondary | -1.28e-12 | -6.24e-06 |
| Natural Gas Prod. | 1,1,1-Trichloroethane | secondary | -1.40e-11 | -6.82e-05 |
| Fuel Oil #4 Prod. | HALON-1301 | secondary | -1.99e-11 | -9.72e-05 |
| Fuel Oil #4 Prod. | 1,1,1-Trichloroethane | secondary | -5.77e-11 | -2.82e-04 |
| Natural Gas Prod. | Bromomethane | secondary | -6.52e-10 | -3.18e-03 |
| Fuel Oil #4 Prod. | Bromomethane | secondary | -2.69e-09 | -1.32e-02 |
| CRT Incineration | 1,1,1-Trichloroethane | secondary | -3.57e-09 | -1.74e-02 |
| CRT Incineration | Bromomethane | secondary | -1.67e-07 | -8.13e-01 |
| **Total End-of-life** | | | **-1.69e-07** | **-8.27e-01** |
| **Total All Life-cycle Stages** | | | **2.05e-05** | **1.00e+02** |

## Table M-16. LCD LCIA Results for the Stratospheric Ozone Depletion Impact Category

| Process Group | Material | LCI Data Type | Ozone Depletion (kg CFC-11 Equivalents) | % of Total |
|---|---|---|---|---|
| **Materials Processing Life-cycle Stage** | | | | |
| Aluminum Prod. | HALON-1301 | secondary | 1.07e-06 | 7.83e+00 |
| Steel Prod., cold-rolled, semi-finished | HALON-1301 | secondary | 1.98e-07 | 1.44e+00 |
| Natural Gas Prod. | Bromomethane | secondary | 9.08e-08 | 6.62e-01 |
| Natural Gas Prod. | 1,1,1-Trichloroethane | secondary | 1.95e-09 | 1.42e-02 |
| Natural Gas Prod. | HALON-1301 | secondary | 1.15e-11 | 8.36e-05 |
| **Total Materials Processing** | | | **1.36e-06** | **9.95e+00** |
| **Manufacturing Life-cycle Stage** | | | | |
| Panel components | HCFC-225cb | primary | 4.62e-06 | 3.37e+01 |
| Panel components | HCFC-225ca | primary | 3.50e-06 | 2.55e+01 |
| Japanese Electric Grid | Bromomethane | model/secondary | 4.31e-07 | 3.14e+00 |
| LPG Production | Bromomethane | secondary | 3.60e-08 | 2.62e-01 |
| Japanese Electric Grid | 1,1,1-Trichloroethane | model/secondary | 2.61e-08 | 1.90e-01 |
| US electric grid | Bromomethane | model/secondary | 1.94e-08 | 1.42e-01 |
| Natural Gas Prod. | Bromomethane | secondary | 2.05e-09 | 1.49e-02 |
| LPG Production | 1,1,1-Trichloroethane | secondary | 7.71e-10 | 5.62e-03 |
| US electric grid | 1,1,1-Trichloroethane | model/secondary | 4.45e-10 | 3.25e-03 |
| LPG Production | HALON-1301 | secondary | 3.90e-10 | 2.84e-03 |
| Fuel Oil #4 Prod. | Bromomethane | secondary | 3.86e-10 | 2.82e-03 |
| Fuel Oil #6 Prod. | Bromomethane | secondary | 2.06e-10 | 1.50e-03 |
| Fuel Oil #2 Prod. | Bromomethane | secondary | 1.10e-10 | 8.00e-04 |
| Natural Gas Prod. | 1,1,1-Trichloroethane | secondary | 4.39e-11 | 3.20e-04 |
| Fuel Oil #4 Prod. | 1,1,1-Trichloroethane | secondary | 8.28e-12 | 6.03e-05 |
| Fuel Oil #6 Prod. | 1,1,1-Trichloroethane | secondary | 4.41e-12 | 3.22e-05 |
| Fuel Oil #4 Prod. | HALON-1301 | secondary | 2.85e-12 | 2.08e-05 |
| Fuel Oil #2 Prod. | 1,1,1-Trichloroethane | secondary | 2.35e-12 | 1.71e-05 |
| Fuel Oil #2 Prod. | HALON-1301 | secondary | 1.06e-12 | 7.75e-06 |
| Fuel Oil #6 Prod. | HALON-1301 | secondary | 9.35e-13 | 6.82e-06 |
| Natural Gas Prod. | HALON-1301 | secondary | 2.59e-13 | 1.89e-06 |
| **Total Manufacturing** | | | **8.63e-06** | **6.29e+01** |
| **Use, Maintenance and Repair Life-cycle Stage** | | | | |
| US electric grid | Bromomethane | model/secondary | 3.75e-06 | 2.73e+01 |
| US electric grid | 1,1,1-Trichloroethane | model/secondary | 8.59e-08 | 6.26e-01 |
| **Total use, Maintenance and Repair** | | | **3.83e-06** | **2.79e+01** |
| **End-of-life Life-cycle Stage** | | | | |
| US electric grid | Bromomethane | model/secondary | 7.11e-10 | 5.18e-03 |
| LCD landfilling | Carbon tetrachloride | primary | 3.63e-10 | 2.64e-03 |
| LCD incineration | Carbon tetrachloride | secondary | 2.81e-10 | 2.05e-03 |
| US electric grid | 1,1,1-Trichloroethane | model/secondary | 1.63e-11 | 1.19e-04 |
| LPG Production | Bromomethane | secondary | 2.95e-12 | 2.15e-05 |
| LPG Production | 1,1,1-Trichloroethane | secondary | 6.33e-14 | 4.61e-07 |
| LPG Production | HALON-1301 | secondary | 3.20e-14 | 2.33e-07 |
| Natural Gas Prod. | HALON-1301 | secondary | -5.44e-14 | -3.96e-07 |
| LCD incineration | HALON-1301 | secondary | -8.28e-13 | -6.03e-06 |
| Natural Gas Prod. | 1,1,1-Trichloroethane | secondary | -9.22e-12 | -6.72e-05 |
| Fuel Oil #4 Prod. | HALON-1301 | secondary | -1.32e-11 | -9.58e-05 |
| Fuel Oil #4 Prod. | 1,1,1-Trichloroethane | secondary | -3.81e-11 | -2.78e-04 |
| Natural Gas Prod. | Bromomethane | secondary | -4.30e-10 | -3.14e-03 |
| Fuel Oil #4 Prod. | Bromomethane | secondary | -1.78e-09 | -1.30e-02 |

## Table M-16. LCD LCIA Results for the Stratospheric Ozone Depletion Impact Category

| Process Group | Material | LCI Data Type | Ozone Depletion (kg CFC-11 Equivalents) | % of Total |
|---|---|---|---|---|
| LCD incineration | 1,1,1-Trichloroethane | secondary | -2.31e-09 | -1.69e-02 |
| LCD incineration | Bromomethane | secondary | -1.08e-07 | -7.86e-01 |
| **Total End-of-life** | | | **-1.11e-07** | **-8.10e-01** |
| **Total All Life-cycle Stages** | | | **1.37e-05** | **1.00e+02** |

## Table M-17. CRT LCIA Results for the Photochemical Smog Impact Category

| Process Group | Material | LCI Data Type | Photo. Smog (kg ethene-equivalents) | % of Total |
|---|---|---|---|---|
| **Materials Processing Life-cycle Stage** | | | | |
| Steel Prod., cold-rolled, semi-finished | Nonmethane hydrocarbons, remaining unspeciated | secondary | 3.32e-02 | 1.94e+01 |
| Steel Prod., cold-rolled, semi-finished | Hydrocarbons, remaining unspeciated | secondary | 3.44e-03 | 2.01e+00 |
| ABS Production | Nonmethane hydrocarbons, remaining unspeciated | secondary | 2.14e-03 | 1.25e+00 |
| Polycarbonate Production | Nonmethane hydrocarbons, remaining unspeciated | secondary | 1.84e-03 | 1.07e+00 |
| Aluminum Prod. | Nonmethane hydrocarbons, remaining unspeciated | secondary | 1.47e-03 | 8.60e-01 |
| ABS Production | Hydrocarbons, remaining unspeciated | secondary | 7.08e-04 | 4.14e-01 |
| Styrene-butadiene Copolymer Prod. | Hydrocarbons, remaining unspeciated | secondary | 6.59e-04 | 3.85e-01 |
| Invar | Nonmethane hydrocarbons, remaining unspeciated | secondary | 5.46e-04 | 3.19e-01 |
| Lead | Nonmethane hydrocarbons, remaining unspeciated | secondary | 3.66e-04 | 2.14e-01 |
| Invar | VOCs, remaining unspeciated | secondary | 2.31e-04 | 1.35e-01 |
| Polystyrene Prod., high-impact | Hydrocarbons, remaining unspeciated | secondary | 2.29e-04 | 1.34e-01 |
| Ferrite mfg. | VOCs, remaining unspeciated | secondary | 2.25e-04 | 1.32e-01 |
| Steel Prod., cold-rolled, semi-finished | Ethylene | secondary | 2.07e-04 | 1.21e-01 |
| Ferrite mfg. | Nonmethane hydrocarbons, remaining unspeciated | secondary | 1.84e-04 | 1.08e-01 |
| ABS Production | Aromatic hydrocarbons | secondary | 1.45e-04 | 8.48e-02 |
| Polycarbonate Production | Methane | secondary | 1.42e-04 | 8.31e-02 |
| Invar | Ethylene | secondary | 1.01e-04 | 5.93e-02 |
| Steel Prod., cold-rolled, semi-finished | Ethane | secondary | 9.79e-05 | 5.72e-02 |
| Ferrite mfg. | Ethylene | secondary | 9.77e-05 | 5.71e-02 |
| Steel Prod., cold-rolled, semi-finished | Methane | secondary | 7.63e-05 | 4.46e-02 |
| Polycarbonate Production | Aromatic hydrocarbons | secondary | 6.25e-05 | 3.66e-02 |
| Aluminum Prod. | Methane | secondary | 5.63e-05 | 3.29e-02 |
| Styrene-butadiene Copolymer Prod. | Aromatic hydrocarbons | secondary | 5.16e-05 | 3.02e-02 |
| Styrene-butadiene Copolymer Prod. | Methane | secondary | 4.81e-05 | 2.81e-02 |
| ABS Production | Ethane | secondary | 4.72e-05 | 2.76e-02 |
| Invar | Methane | secondary | 4.03e-05 | 2.36e-02 |
| Steel Prod., cold-rolled, semi-finished | n-Propane | secondary | 3.83e-05 | 2.24e-02 |
| ABS Production | Methane | secondary | 3.56e-05 | 2.08e-02 |
| Invar | Ethane | secondary | 3.29e-05 | 1.92e-02 |
| Ferrite mfg. | Ethane | secondary | 3.21e-05 | 1.88e-02 |
| Polycarbonate Production | Aldehydes | secondary | 2.62e-05 | 1.53e-02 |
| ABS Production | Ethylene | secondary | 2.57e-05 | 1.50e-02 |
| Steel Prod., cold-rolled, semi-finished | Propylene | secondary | 2.49e-05 | 1.45e-02 |
| Polystyrene Prod., high-impact | Aromatic hydrocarbons | secondary | 2.30e-05 | 1.35e-02 |
| Invar | Hydrocarbons, remaining unspeciated | secondary | 2.21e-05 | 1.29e-02 |
| Ferrite mfg. | Hydrocarbons, remaining unspeciated | secondary | 2.16e-05 | 1.26e-02 |
| Ferrite mfg. | Methane | secondary | 2.00e-05 | 1.17e-02 |
| Steel Prod., cold-rolled, semi-finished | Aldehydes | secondary | 1.89e-05 | 1.10e-02 |
| Lead | Methane | secondary | 1.76e-05 | 1.03e-02 |
| Lead | Ethylene | secondary | 1.59e-05 | 9.31e-03 |
| Aluminum Prod. | Xylene (mixed isomers) | secondary | 1.41e-05 | 8.23e-03 |
| Aluminum Prod. | Polycyclic aromatic hydrocarbons | secondary | 1.38e-05 | 8.06e-03 |
| Lead | Ethane | secondary | 1.26e-05 | 7.35e-03 |
| Invar | n-Propane | secondary | 1.24e-05 | 7.26e-03 |
| Ferrite mfg. | n-Propane | secondary | 1.21e-05 | 7.09e-03 |
| Polystyrene Prod., high-impact | Methane | secondary | 1.16e-05 | 6.80e-03 |
| Steel Prod., cold-rolled, semi-finished | Butane | secondary | 9.05e-06 | 5.29e-03 |
| Invar | Propylene | secondary | 7.07e-06 | 4.14e-03 |

## Table M-17. CRT LCIA Results for the Photochemical Smog Impact Category

| Process Group | Material | LCI Data Type | Photo. Smog (kg ethene-equivalents) | % of Total |
|---|---|---|---|---|
| Steel Prod., cold-rolled, semi-finished | Pentane | secondary | 6.92e-06 | 4.04e-03 |
| Ferrite mfg. | Propylene | secondary | 6.90e-06 | 4.04e-03 |
| ABS Production | Formaldehyde | secondary | 5.89e-06 | 3.44e-03 |
| Invar | Xylene (mixed isomers) | secondary | 5.53e-06 | 3.24e-03 |
| Steel Prod., cold-rolled, semi-finished | Benzene | secondary | 5.26e-06 | 3.07e-03 |
| ABS Production | Heptane | secondary | 4.74e-06 | 2.77e-03 |
| Aluminum Prod. | Toluene | secondary | 4.67e-06 | 2.73e-03 |
| Aluminum Prod. | Aldehydes | secondary | 4.59e-06 | 2.69e-03 |
| Steel Prod., cold-rolled, semi-finished | Toluene | secondary | 4.37e-06 | 2.55e-03 |
| Steel Prod., cold-rolled, semi-finished | Xylene (mixed isomers) | secondary | 4.16e-06 | 2.43e-03 |
| Steel Prod., cold-rolled, semi-finished | Acetylene | secondary | 3.91e-06 | 2.29e-03 |
| Invar | Butane | secondary | 3.80e-06 | 2.22e-03 |
| Ferrite mfg. | Butane | secondary | 3.71e-06 | 2.17e-03 |
| Invar | Pentane | secondary | 3.66e-06 | 2.14e-03 |
| Ferrite mfg. | Pentane | secondary | 3.57e-06 | 2.09e-03 |
| Invar | Benzene | secondary | 2.59e-06 | 1.52e-03 |
| Lead | Xylene (mixed isomers) | secondary | 2.59e-06 | 1.51e-03 |
| Steel Prod., cold-rolled, semi-finished | Hexane | secondary | 1.84e-06 | 1.08e-03 |
| Ferrite mfg. | Benzene | secondary | 1.76e-06 | 1.03e-03 |
| Invar | Toluene | secondary | 1.60e-06 | 9.33e-04 |
| Ferrite mfg. | Toluene | secondary | 1.56e-06 | 9.11e-04 |
| Steel Prod., cold-rolled, semi-finished | Formaldehyde | secondary | 1.53e-06 | 8.92e-04 |
| Aluminum Prod. | Alcohols | secondary | 1.50e-06 | 8.76e-04 |
| Ferrite mfg. | Xylene (mixed isomers) | secondary | 1.43e-06 | 8.39e-04 |
| Steel Prod., cold-rolled, semi-finished | Phenol | secondary | 1.43e-06 | 8.35e-04 |
| ABS Production | Ethanol | secondary | 1.40e-06 | 8.17e-04 |
| Aluminum Prod. | Benzene | secondary | 1.22e-06 | 7.14e-04 |
| Invar | Acetylene | secondary | 1.11e-06 | 6.50e-04 |
| Ferrite mfg. | Acetylene | secondary | 1.08e-06 | 6.34e-04 |
| Invar | Ethylbenzene | secondary | 9.65e-07 | 5.64e-04 |
| Invar | Benzo[a]pyrene | secondary | 9.36e-07 | 5.48e-04 |
| Steel Prod., cold-rolled, semi-finished | Heptane | secondary | 8.81e-07 | 5.15e-04 |
| Lead | Benzene | secondary | 8.32e-07 | 4.87e-04 |
| Invar | Aromatic hydrocarbons | secondary | 7.76e-07 | 4.54e-04 |
| Invar | Methanol | secondary | 6.92e-07 | 4.05e-04 |
| Invar | Ethanol | secondary | 6.13e-07 | 3.58e-04 |
| Invar | Formaldehyde | secondary | 5.89e-07 | 3.44e-04 |
| Ferrite mfg. | Formaldehyde | secondary | 5.74e-07 | 3.36e-04 |
| Invar | Hexane | secondary | 5.36e-07 | 3.13e-04 |
| Ferrite mfg. | Hexane | secondary | 5.23e-07 | 3.06e-04 |
| Invar | Acetaldehyde | secondary | 5.10e-07 | 2.98e-04 |
| Steel Prod., cold-rolled, semi-finished | Aromatic hydrocarbons | secondary | 5.05e-07 | 2.95e-04 |
| Steel Prod., cold-rolled, semi-finished | Methanol | secondary | 4.42e-07 | 2.59e-04 |
| Lead | Ethylbenzene | secondary | 4.11e-07 | 2.40e-04 |
| Invar | Phenol | secondary | 4.05e-07 | 2.37e-04 |
| Ferrite mfg. | Phenol | secondary | 3.95e-07 | 2.31e-04 |
| Steel Prod., cold-rolled, semi-finished | Ethanol | secondary | 3.56e-07 | 2.08e-04 |
| Polystyrene Prod., high-impact | Polycyclic aromatic hydrocarbons | secondary | 3.45e-07 | 2.02e-04 |
| Steel Prod., cold-rolled, semi-finished | Acetaldehyde | secondary | 2.96e-07 | 1.73e-04 |
| Invar | Heptane | secondary | 2.67e-07 | 1.56e-04 |

## Table M-17. CRT LCIA Results for the Photochemical Smog Impact Category

| Process Group | Material | LCI Data Type | Photo. Smog (kg ethene-equivalents) | % of Total |
|---|---|---|---|---|
| Ferrite mfg. | Heptane | secondary | 2.61e-07 | 1.53e-04 |
| Steel Prod., cold-rolled, semi-finished | Ethylbenzene | secondary | 2.35e-07 | 1.37e-04 |
| Invar | Acetone | secondary | 2.04e-07 | 1.19e-04 |
| Polycarbonate Production | Ethanethiol | secondary | 1.84e-07 | 1.07e-04 |
| Ferrite mfg. | Aromatic hydrocarbons | secondary | 1.62e-07 | 9.45e-05 |
| Ferrite mfg. | Methanol | secondary | 1.24e-07 | 7.28e-05 |
| Invar | Aldehydes | secondary | 1.21e-07 | 7.05e-05 |
| Steel Prod., cold-rolled, semi-finished | Acetone | secondary | 1.18e-07 | 6.91e-05 |
| Ferrite mfg. | Aldehydes | secondary | 1.14e-07 | 6.64e-05 |
| Ferrite mfg. | Ethylbenzene | secondary | 1.03e-07 | 6.03e-05 |
| Ferrite mfg. | Ethanol | secondary | 1.00e-07 | 5.86e-05 |
| ABS Production | Aldehydes | secondary | 9.38e-08 | 5.48e-05 |
| Styrene-butadiene Copolymer Prod. | Aldehydes | secondary | 9.16e-08 | 5.36e-05 |
| Ferrite mfg. | Acetaldehyde | secondary | 8.48e-08 | 4.96e-05 |
| ABS Production | Ethanethiol | secondary | 8.43e-08 | 4.93e-05 |
| Lead | Ethanol | secondary | 7.77e-08 | 4.54e-05 |
| Steel Prod., cold-rolled, semi-finished | Benzo[a]pyrene | secondary | 6.79e-08 | 3.97e-05 |
| Lead | Acetaldehyde | secondary | 6.57e-08 | 3.84e-05 |
| Lead | Methanol | secondary | 6.02e-08 | 3.52e-05 |
| Lead | Aromatic hydrocarbons | secondary | 5.16e-08 | 3.02e-05 |
| Steel Prod., cold-rolled, semi-finished | Polycyclic aromatic hydrocarbons | secondary | 3.72e-08 | 2.18e-05 |
| Invar | Polycyclic aromatic hydrocarbons | secondary | 3.63e-08 | 2.12e-05 |
| Ferrite mfg. | Polycyclic aromatic hydrocarbons | secondary | 3.54e-08 | 2.07e-05 |
| Ferrite mfg. | Acetone | secondary | 3.34e-08 | 1.95e-05 |
| Lead | Acetone | secondary | 2.57e-08 | 1.50e-05 |
| Invar | Alcohols | secondary | 2.38e-08 | 1.39e-05 |
| Ferrite mfg. | Alcohols | secondary | 2.33e-08 | 1.36e-05 |
| Ferrite mfg. | Benzo[a]pyrene | secondary | 1.88e-08 | 1.10e-05 |
| Steel Prod., cold-rolled, semi-finished | Naphthalene | secondary | 1.13e-08 | 6.62e-06 |
| Aluminum Prod. | 1,2-Dichlorotetrafluoroethane | secondary | 5.02e-09 | 2.93e-06 |
| Aluminum Prod. | Phenol | secondary | 3.04e-09 | 1.78e-06 |
| Lead | Aldehydes | secondary | 2.15e-09 | 1.26e-06 |
| Invar | 1,2-Dichlorotetrafluoroethane | secondary | 2.08e-09 | 1.22e-06 |
| Lead | Benzo[a]pyrene | secondary | 1.49e-09 | 8.73e-07 |
| Invar | Trichlorofluoromethane | secondary | 1.27e-10 | 7.40e-08 |
| ABS Production | HCFC-22 | secondary | 5.59e-11 | 3.27e-08 |
| Ferrite mfg. | Trichlorofluoromethane | secondary | 4.71e-11 | 2.75e-08 |
| Invar | Ethanethiol | secondary | 3.47e-11 | 2.03e-08 |
| Ferrite mfg. | Ethanethiol | secondary | 3.38e-11 | 1.98e-08 |
| Invar | Dichlorodifluoromethane | secondary | 1.69e-11 | 9.85e-09 |
| Lead | Acrolein | secondary | 1.05e-11 | 6.17e-09 |
| Lead | Benzaldehyde | secondary | 5.52e-12 | 3.22e-09 |
| Invar | Propionaldehyde | secondary | 9.34e-14 | 5.46e-11 |
| Steel Prod., cold-rolled, semi-finished | Propionaldehyde | secondary | 9.34e-14 | 5.46e-11 |
| Ferrite mfg. | Propionaldehyde | secondary | 9.12e-14 | 5.33e-11 |
| Steel Prod., cold-rolled, semi-finished | Benzaldehyde | secondary | 2.51e-14 | 1.47e-11 |
| Invar | Benzaldehyde | secondary | 2.50e-14 | 1.46e-11 |
| Ferrite mfg. | Benzaldehyde | secondary | 2.43e-14 | 1.42e-11 |
| Invar | Acrolein | secondary | 4.38e-15 | 2.56e-12 |

## Table M-17. CRT LCIA Results for the Photochemical Smog Impact Category

| Process Group | Material | LCI Data Type | Photo. Smog (kg ethene-equivalents) | % of Total |
|---|---|---|---|---|
| Ferrite mfg. | 1,2-Dichlorotetrafluoroethane | secondary | 1.54e-16 | 8.98e-14 |
| Invar | HCFC-22 | secondary | 1.41e-18 | 8.22e-16 |
| Ferrite mfg. | HCFC-22 | secondary | 1.37e-18 | 8.02e-16 |
| Ferrite mfg. | Dichlorodifluoromethane | secondary | 1.25e-18 | 7.30e-16 |
| **Total Materials Processing** | | | **4.69e-02** | **2.74e+01** |
| **Manufacturing Life-cycle Stage** | | | | |
| LPG Production | Hydrocarbons, remaining unspeciated | secondary | 6.22e-02 | 3.64e+01 |
| LPG Production | Nonmethane hydrocarbons, remaining unspeciated | secondary | 4.24e-02 | 2.48e+01 |
| LPG Production | Methane | secondary | 5.87e-03 | 3.43e+00 |
| LPG Production | Benzene | secondary | 2.71e-03 | 1.59e+00 |
| CRT tube mfg. | Toluene | primary | 2.16e-03 | 1.26e+00 |
| Natural Gas Prod. | Nonmethane hydrocarbons, remaining unspeciated | secondary | 9.01e-04 | 5.27e-01 |
| LPG Production | Aldehydes | secondary | 6.61e-04 | 3.87e-01 |
| Fuel Oil #6 Prod. | Hydrocarbons, remaining unspeciated | secondary | 5.36e-04 | 3.13e-01 |
| LPG Production | Formaldehyde | secondary | 4.93e-04 | 2.88e-01 |
| Fuel Oil #6 Prod. | Nonmethane hydrocarbons, remaining unspeciated | secondary | 3.55e-04 | 2.08e-01 |
| Natural Gas Prod. | Methane | secondary | 3.51e-04 | 2.05e-01 |
| LPG Production | Ethane | secondary | 3.09e-04 | 1.81e-01 |
| CRT tube mfg. | Xylene (mixed isomers) | primary | 2.92e-04 | 1.71e-01 |
| LPG Production | Pentane | secondary | 2.65e-04 | 1.55e-01 |
| Natural Gas Prod. | Benzene | secondary | 2.39e-04 | 1.40e-01 |
| LPG Production | Butane | secondary | 2.09e-04 | 1.22e-01 |
| Fuel Oil #2 Prod. | Hydrocarbons, remaining unspeciated | secondary | 1.97e-04 | 1.15e-01 |
| LPG Production | Hexane | secondary | 1.88e-04 | 1.10e-01 |
| Fuel Oil #2 Prod. | Nonmethane hydrocarbons, remaining unspeciated | secondary | 1.34e-04 | 7.84e-02 |
| US electric grid | Methane | model/secondary | 7.20e-05 | 4.21e-02 |
| CRT tube mfg. | Nonmethane hydrocarbons, remaining unspeciated | primary | 6.33e-05 | 3.70e-02 |
| Fuel Oil #6 Prod. | Methane | secondary | 4.12e-05 | 2.41e-02 |
| Natural Gas Prod. | Hydrocarbons, remaining unspeciated | secondary | 2.48e-05 | 1.45e-02 |
| Fuel Oil #4 Prod. | Hydrocarbons, remaining unspeciated | secondary | 2.16e-05 | 1.26e-02 |
| Fuel Oil #2 Prod. | Methane | secondary | 1.80e-05 | 1.05e-02 |
| PWB Mfg. | Formaldehyde | model/secondary | 1.63e-05 | 9.55e-03 |
| Fuel Oil #6 Prod. | Benzene | secondary | 1.55e-05 | 9.06e-03 |
| Fuel Oil #4 Prod. | Nonmethane hydrocarbons, remaining unspeciated | secondary | 1.45e-05 | 8.47e-03 |
| Fuel Oil #2 Prod. | Benzene | secondary | 8.06e-06 | 4.71e-03 |
| Fuel Oil #6 Prod. | Formaldehyde | secondary | 5.03e-06 | 2.94e-03 |
| Natural Gas Prod. | Aldehydes | secondary | 4.77e-06 | 2.79e-03 |
| Japanese Electric Grid | Formaldehyde | model/secondary | 4.30e-06 | 2.51e-03 |
| Fuel Oil #6 Prod. | Aldehydes | secondary | 3.77e-06 | 2.20e-03 |
| LPG Production | Isophorone | secondary | 2.95e-06 | 1.73e-03 |
| Natural Gas Prod. | Ethane | secondary | 2.78e-06 | 1.63e-03 |
| Natural Gas Prod. | Pentane | secondary | 2.39e-06 | 1.40e-03 |
| LPG Production | Toluene | secondary | 2.09e-06 | 1.22e-03 |
| Fuel Oil #2 Prod. | Aldehydes | secondary | 1.96e-06 | 1.15e-03 |
| Natural Gas Prod. | Butane | secondary | 1.88e-06 | 1.10e-03 |
| Fuel Oil #4 Prod. | Methane | secondary | 1.82e-06 | 1.07e-03 |
| Fuel Oil #6 Prod. | Ethane | secondary | 1.76e-06 | 1.03e-03 |
| LPG Production | Acetaldehyde | secondary | 1.69e-06 | 9.88e-04 |
| Natural Gas Prod. | Hexane | secondary | 1.69e-06 | 9.87e-04 |

## Table M-17. CRT LCIA Results for the Photochemical Smog Impact Category

| Process Group | Material | LCI Data Type | Photo. Smog (kg ethene-equivalents) | % of Total |
|---|---|---|---|---|
| Fuel Oil #2 Prod. | Formaldehyde | secondary | 1.62e-06 | 9.47e-04 |
| LPG Production | Propionaldehyde | secondary | 1.53e-06 | 8.96e-04 |
| Fuel Oil #6 Prod. | Pentane | secondary | 1.52e-06 | 8.87e-04 |
| LPG Production | Methyl ethyl ketone | secondary | 1.23e-06 | 7.22e-04 |
| Fuel Oil #6 Prod. | Butane | secondary | 1.20e-06 | 6.99e-04 |
| Fuel Oil #6 Prod. | Hexane | secondary | 1.07e-06 | 6.27e-04 |
| Fuel Oil #2 Prod. | Ethane | secondary | 9.17e-07 | 5.36e-04 |
| LPG Production | Acrolein | secondary | 8.60e-07 | 5.03e-04 |
| Japanese Electric Grid | Toluene | model/secondary | 8.05e-07 | 4.71e-04 |
| Fuel Oil #2 Prod. | Pentane | secondary | 7.89e-07 | 4.61e-04 |
| LPG Production | o-xylene | secondary | 7.85e-07 | 4.59e-04 |
| Fuel Oil #4 Prod. | Benzene | secondary | 7.62e-07 | 4.46e-04 |
| LPG Production | n-Propane | secondary | 7.01e-07 | 4.10e-04 |
| US electric grid | Isophorone | model/secondary | 6.32e-07 | 3.69e-04 |
| Fuel Oil #2 Prod. | Butane | secondary | 6.21e-07 | 3.63e-04 |
| Japanese Electric Grid | Methane | model/secondary | 5.69e-07 | 3.33e-04 |
| US electric grid | Formaldehyde | model/secondary | 5.69e-07 | 3.33e-04 |
| Fuel Oil #2 Prod. | Hexane | secondary | 5.57e-07 | 3.26e-04 |
| Japanese Electric Grid | Isophorone | model/secondary | 5.05e-07 | 2.95e-04 |
| LPG Production | Ethylbenzene | secondary | 4.83e-07 | 2.83e-04 |
| LPG Production | Bromomethane | secondary | 4.26e-07 | 2.49e-04 |
| US electric grid | Acetaldehyde | model/secondary | 3.61e-07 | 2.11e-04 |
| US electric grid | Benzene | model/secondary | 3.52e-07 | 2.06e-04 |
| US electric grid | Propionaldehyde | model/secondary | 3.28e-07 | 1.92e-04 |
| Japanese Electric Grid | Acetaldehyde | model/secondary | 2.89e-07 | 1.69e-04 |
| Japanese Electric Grid | Benzene | model/secondary | 2.88e-07 | 1.68e-04 |
| LPG Production | Naphthalene | secondary | 2.66e-07 | 1.55e-04 |
| US electric grid | Methyl ethyl ketone | model/secondary | 2.64e-07 | 1.54e-04 |
| Japanese Electric Grid | Propionaldehyde | model/secondary | 2.62e-07 | 1.53e-04 |
| US electric grid | Toluene | model/secondary | 2.28e-07 | 1.34e-04 |
| Japanese Electric Grid | Methyl ethyl ketone | model/secondary | 2.11e-07 | 1.23e-04 |
| Fuel Oil #4 Prod. | Formaldehyde | secondary | 1.89e-07 | 1.10e-04 |
| Fuel Oil #4 Prod. | Aldehydes | secondary | 1.86e-07 | 1.09e-04 |
| US electric grid | Acrolein | model/secondary | 1.84e-07 | 1.08e-04 |
| Japanese Electric Grid | Naphthalene | model/secondary | 1.68e-07 | 9.84e-05 |
| Japanese Electric Grid | Acrolein | model/secondary | 1.47e-07 | 8.59e-05 |
| LPG Production | Styrene | secondary | 1.27e-07 | 7.44e-05 |
| US electric grid | Ethylbenzene | model/secondary | 1.03e-07 | 6.01e-05 |
| Natural Gas Prod. | Formaldehyde | secondary | 1.02e-07 | 5.95e-05 |
| LPG Production | Benzyl chloride | secondary | 9.84e-08 | 5.75e-05 |
| LPG Production | Methyl tert-butyl ether | secondary | 9.32e-08 | 5.45e-05 |
| US electric grid | Bromomethane | model/secondary | 9.12e-08 | 5.33e-05 |
| Japanese Electric Grid | Ethylbenzene | model/secondary | 9.03e-08 | 5.28e-05 |
| Fuel Oil #4 Prod. | Ethane | secondary | 8.68e-08 | 5.07e-05 |
| LPG Production | Phenol | secondary | 8.15e-08 | 4.76e-05 |
| LPG Production | Acetophenone | secondary | 7.64e-08 | 4.47e-05 |
| Fuel Oil #4 Prod. | Pentane | secondary | 7.46e-08 | 4.36e-05 |
| LPG Production | Methyl chloride | secondary | 7.45e-08 | 4.35e-05 |
| Japanese Electric Grid | Bromomethane | model/secondary | 7.28e-08 | 4.26e-05 |

## Table M-17. CRT LCIA Results for the Photochemical Smog Impact Category

| Process Group | Material | LCI Data Type | Photo. Smog (kg ethene-equivalents) | % of Total |
|---|---|---|---|---|
| Fuel Oil #4 Prod. | Butane | secondary | 5.88e-08 | 3.44e-05 |
| Fuel Oil #4 Prod. | Hexane | secondary | 5.27e-08 | 3.08e-05 |
| Natural Gas Prod. | o-xylene | secondary | 5.27e-08 | 3.08e-05 |
| LPG Production | Dichloromethane | secondary | 4.07e-08 | 2.38e-05 |
| US electric grid | Xylene (mixed isomers) | model/secondary | 4.03e-08 | 2.36e-05 |
| LPG Production | Aromatic hydrocarbons | secondary | 4.00e-08 | 2.34e-05 |
| US electric grid | Hexane | model/secondary | 3.99e-08 | 2.33e-05 |
| Japanese Electric Grid | Xylene (mixed isomers) | model/secondary | 3.22e-08 | 1.88e-05 |
| Japanese Electric Grid | Hexane | model/secondary | 3.19e-08 | 1.86e-05 |
| Natural Gas Prod. | Toluene | secondary | 2.91e-08 | 1.70e-05 |
| US electric grid | Styrene | model/secondary | 2.72e-08 | 1.59e-05 |
| LPG Production | Cumene | secondary | 2.70e-08 | 1.58e-05 |
| Fuel Oil #6 Prod. | Isophorone | secondary | 2.38e-08 | 1.39e-05 |
| US electric grid | Naphthalene | model/secondary | 2.22e-08 | 1.30e-05 |
| Japanese Electric Grid | Styrene | model/secondary | 2.17e-08 | 1.27e-05 |
| US electric grid | Benzyl chloride | model/secondary | 2.10e-08 | 1.23e-05 |
| US electric grid | Methyl tert-butyl ether | model/secondary | 1.99e-08 | 1.17e-05 |
| US electric grid | Phenol | model/secondary | 1.74e-08 | 1.02e-05 |
| LPG Production | Phenanthrene | secondary | 1.72e-08 | 1.01e-05 |
| Japanese Electric Grid | Benzyl chloride | model/secondary | 1.68e-08 | 9.82e-06 |
| US electric grid | Acetophenone | model/secondary | 1.63e-08 | 9.55e-06 |
| US electric grid | Methyl chloride | model/secondary | 1.59e-08 | 9.32e-06 |
| Japanese Electric Grid | Methyl tert-butyl ether | model/secondary | 1.59e-08 | 9.28e-06 |
| Japanese Electric Grid | o-xylene | model/secondary | 1.47e-08 | 8.59e-06 |
| Fuel Oil #6 Prod. | Toluene | secondary | 1.41e-08 | 8.25e-06 |
| Japanese Electric Grid | Phenol | model/secondary | 1.39e-08 | 8.14e-06 |
| Fuel Oil #6 Prod. | Acetaldehyde | secondary | 1.36e-08 | 7.97e-06 |
| Japanese Electric Grid | Acetophenone | model/secondary | 1.30e-08 | 7.63e-06 |
| Japanese Electric Grid | Methyl chloride | model/secondary | 1.27e-08 | 7.44e-06 |
| Fuel Oil #6 Prod. | Propionaldehyde | secondary | 1.24e-08 | 7.23e-06 |
| LPG Production | Vinyl acetate | secondary | 1.13e-08 | 6.63e-06 |
| Fuel Oil #6 Prod. | Methyl ethyl ketone | secondary | 9.96e-09 | 5.82e-06 |
| Fuel Oil #2 Prod. | Isophorone | secondary | 9.26e-09 | 5.42e-06 |
| US electric grid | Dichloromethane | model/secondary | 8.72e-09 | 5.10e-06 |
| LPG Production | Biphenyl | secondary | 8.66e-09 | 5.06e-06 |
| LPG Production | Chloroform | secondary | 8.29e-09 | 4.85e-06 |
| Japanese Electric Grid | Dichloromethane | model/secondary | 6.96e-09 | 4.07e-06 |
| Fuel Oil #6 Prod. | Acrolein | secondary | 6.94e-09 | 4.06e-06 |
| Fuel Oil #2 Prod. | Toluene | secondary | 6.37e-09 | 3.72e-06 |
| LPG Production | 1,4-Dichlorobenzene | secondary | 6.31e-09 | 3.69e-06 |
| LPG Production | Tetrachloroethylene | secondary | 6.04e-09 | 3.53e-06 |
| LPG Production | Ethyl Chloride | secondary | 5.90e-09 | 3.45e-06 |
| US electric grid | Cumene | model/secondary | 5.77e-09 | 3.38e-06 |
| LPG Production | 1,2-Dichloroethane | secondary | 5.62e-09 | 3.29e-06 |
| Fuel Oil #6 Prod. | n-Propane | secondary | 5.62e-09 | 3.29e-06 |
| Fuel Oil #2 Prod. | Acetaldehyde | secondary | 5.30e-09 | 3.10e-06 |
| LPG Production | Fluorene | secondary | 5.28e-09 | 3.09e-06 |
| Natural Gas Prod. | Isophorone | secondary | 5.12e-09 | 3.00e-06 |
| Fuel Oil #6 Prod. | o-xylene | secondary | 4.91e-09 | 2.87e-06 |
| Fuel Oil #2 Prod. | Propionaldehyde | secondary | 4.81e-09 | 2.81e-06 |

## Table M-17. CRT LCIA Results for the Photochemical Smog Impact Category

| Process Group | Material | LCI Data Type | Photo. Smog (kg ethene-equivalents) | % of Total |
|---|---|---|---|---|
| Japanese Electric Grid | Cumene hydroperoxide | model/secondary | 4.61e-09 | 2.69e-06 |
| LPG Production | 2-Methylnaphthalene | secondary | 4.57e-09 | 2.67e-06 |
| LPG Production | Fluoranthene | secondary | 4.31e-09 | 2.52e-06 |
| LPG Production | Acenaphthene | secondary | 3.99e-09 | 2.33e-06 |
| Japanese Electric Grid | Phenanthrene | model/secondary | 3.96e-09 | 2.32e-06 |
| Fuel Oil #6 Prod. | Ethylbenzene | secondary | 3.89e-09 | 2.27e-06 |
| Fuel Oil #2 Prod. | Methyl ethyl ketone | secondary | 3.87e-09 | 2.26e-06 |
| Fuel Oil #6 Prod. | Bromomethane | secondary | 3.44e-09 | 2.01e-06 |
| Japanese Electric Grid | Acenaphthene | model/secondary | 3.29e-09 | 1.92e-06 |
| LPG Production | Ethylene dibromide | secondary | 3.20e-09 | 1.87e-06 |
| LPG Production | Chlorobenzene | secondary | 3.09e-09 | 1.81e-06 |
| US electric grid | Phenanthrene | model/secondary | 3.04e-09 | 1.78e-06 |
| Natural Gas Prod. | Acetaldehyde | secondary | 2.93e-09 | 1.71e-06 |
| LPG Production | 1,1,1-Trichloroethane | secondary | 2.81e-09 | 1.64e-06 |
| LPG Production | Pyrene | secondary | 2.74e-09 | 1.60e-06 |
| Fuel Oil #2 Prod. | Acrolein | secondary | 2.70e-09 | 1.58e-06 |
| Natural Gas Prod. | Propionaldehyde | secondary | 2.66e-09 | 1.55e-06 |
| US electric grid | Vinyl acetate | model/secondary | 2.43e-09 | 1.42e-06 |
| Fuel Oil #2 Prod. | o-xylene | secondary | 2.36e-09 | 1.38e-06 |
| Fuel Oil #2 Prod. | n-Propane | secondary | 2.20e-09 | 1.28e-06 |
| Natural Gas Prod. | Methyl ethyl ketone | secondary | 2.14e-09 | 1.25e-06 |
| Japanese Electric Grid | Vinyl acetate | model/secondary | 1.93e-09 | 1.13e-06 |
| US electric grid | Biphenyl | model/secondary | 1.85e-09 | 1.08e-06 |
| US electric grid | Chloroform | model/secondary | 1.77e-09 | 1.04e-06 |
| LPG Production | Acenaphthylene | secondary | 1.63e-09 | 9.52e-07 |
| Fuel Oil #6 Prod. | Naphthalene | secondary | 1.61e-09 | 9.41e-07 |
| LPG Production | Anthracene | secondary | 1.59e-09 | 9.28e-07 |
| Fuel Oil #2 Prod. | Ethylbenzene | secondary | 1.52e-09 | 8.86e-07 |
| Natural Gas Prod. | Acrolein | secondary | 1.49e-09 | 8.72e-07 |
| Japanese Electric Grid | Biphenyl | model/secondary | 1.48e-09 | 8.64e-07 |
| LPG Production | 2,4-Dinitrotoluene | secondary | 1.43e-09 | 8.34e-07 |
| Japanese Electric Grid | Chloroform | model/secondary | 1.42e-09 | 8.28e-07 |
| Japanese Electric Grid | Fluorene | model/secondary | 1.39e-09 | 8.14e-07 |
| Japanese Electric Grid | 1,1,1-Trichloroethane | model/secondary | 1.36e-09 | 7.94e-07 |
| Natural Gas Prod. | Naphthalene | secondary | 1.34e-09 | 7.84e-07 |
| Natural Gas Prod. | n-Propane | secondary | 1.34e-09 | 7.83e-07 |
| Fuel Oil #2 Prod. | Bromomethane | secondary | 1.34e-09 | 7.82e-07 |
| Japanese Electric Grid | Fluoranthene | model/secondary | 1.33e-09 | 7.77e-07 |
| US electric grid | Tetrachloroethylene | model/secondary | 1.29e-09 | 7.56e-07 |
| US electric grid | Ethyl Chloride | model/secondary | 1.26e-09 | 7.38e-07 |
| US electric grid | 1,2-Dichloroethane | model/secondary | 1.20e-09 | 7.03e-07 |
| Japanese Electric Grid | Tetrachloroethylene | model/secondary | 1.03e-09 | 6.03e-07 |
| Fuel Oil #6 Prod. | Styrene | secondary | 1.03e-09 | 6.01e-07 |
| US electric grid | Fluorene | model/secondary | 1.02e-09 | 5.96e-07 |
| Japanese Electric Grid | Ethyl Chloride | model/secondary | 1.01e-09 | 5.89e-07 |
| Fuel Oil #4 Prod. | Isophorone | secondary | 9.88e-10 | 5.78e-07 |
| LPG Production | 2-Chloroacetophenone | secondary | 9.84e-10 | 5.75e-07 |
| Japanese Electric Grid | 1,2-Dichloroethane | model/secondary | 9.60e-10 | 5.61e-07 |
| Japanese Electric Grid | Pyrene | model/secondary | 9.59e-10 | 5.61e-07 |

## Table M-17. CRT LCIA Results for the Photochemical Smog Impact Category

| Process Group | Material | LCI Data Type | Photo. Smog (kg ethene-equivalents) | % of Total |
|---|---|---|---|---|
| LPG Production | Benzo[a]anthracene | secondary | 9.50e-10 | 5.55e-07 |
| LPG Production | Chrysene | secondary | 9.11e-10 | 5.33e-07 |
| Natural Gas Prod. | Ethylbenzene | secondary | 8.40e-10 | 4.91e-07 |
| US electric grid | Fluoranthene | model/secondary | 8.15e-10 | 4.77e-07 |
| Fuel Oil #2 Prod. | Naphthalene | secondary | 7.96e-10 | 4.65e-07 |
| Fuel Oil #6 Prod. | Benzyl chloride | secondary | 7.94e-10 | 4.64e-07 |
| Fuel Oil #6 Prod. | Methyl tert-butyl ether | secondary | 7.52e-10 | 4.40e-07 |
| Natural Gas Prod. | Bromomethane | secondary | 7.39e-10 | 4.32e-07 |
| LPG Production | Indeno(1,2,3-cd)pyrene | secondary | 7.07e-10 | 4.13e-07 |
| US electric grid | o-xylene | model/secondary | 6.93e-10 | 4.05e-07 |
| US electric grid | Acenaphthene | model/secondary | 6.90e-10 | 4.03e-07 |
| US electric grid | Ethylene dibromide | model/secondary | 6.84e-10 | 4.00e-07 |
| US electric grid | Chlorobenzene | model/secondary | 6.61e-10 | 3.87e-07 |
| Fuel Oil #6 Prod. | Phenol | secondary | 6.57e-10 | 3.84e-07 |
| US electric grid | 1,1,1-Trichloroethane | model/secondary | 6.43e-10 | 3.76e-07 |
| Fuel Oil #4 Prod. | Toluene | secondary | 6.37e-10 | 3.72e-07 |
| Fuel Oil #6 Prod. | Acetophenone | secondary | 6.16e-10 | 3.60e-07 |
| Japanese Electric Grid | Benzo[a]anthracene | model/secondary | 6.09e-10 | 3.56e-07 |
| Fuel Oil #6 Prod. | Methyl chloride | secondary | 6.01e-10 | 3.51e-07 |
| Fuel Oil #4 Prod. | Acetaldehyde | secondary | 5.65e-10 | 3.30e-07 |
| LPG Production | Benzo[b,j,k]fluoranthene | secondary | 5.60e-10 | 3.27e-07 |
| Japanese Electric Grid | Ethylene dibromide | model/secondary | 5.46e-10 | 3.19e-07 |
| Japanese Electric Grid | Chlorobenzene | model/secondary | 5.28e-10 | 3.09e-07 |
| LPG Production | Benzo[a]pyrene | secondary | 5.20e-10 | 3.04e-07 |
| Fuel Oil #4 Prod. | Propionaldehyde | secondary | 5.13e-10 | 3.00e-07 |
| LPG Production | Benzo[g,h,i]perylene | secondary | 4.22e-10 | 2.47e-07 |
| Fuel Oil #4 Prod. | Methyl ethyl ketone | secondary | 4.13e-10 | 2.41e-07 |
| Japanese Electric Grid | Chrysene | model/secondary | 4.07e-10 | 2.38e-07 |
| US electric grid | Pyrene | model/secondary | 4.05e-10 | 2.37e-07 |
| Fuel Oil #2 Prod. | Styrene | secondary | 3.99e-10 | 2.33e-07 |
| Japanese Electric Grid | Anthracene | model/secondary | 3.47e-10 | 2.03e-07 |
| Japanese Electric Grid | Indeno(1,2,3-cd)pyrene | model/secondary | 3.41e-10 | 1.99e-07 |
| Fuel Oil #6 Prod. | Dichloromethane | secondary | 3.29e-10 | 1.92e-07 |
| Japanese Electric Grid | Benzo[g,h,i]perylene | model/secondary | 3.27e-10 | 1.91e-07 |
| Fuel Oil #2 Prod. | Benzyl chloride | secondary | 3.09e-10 | 1.80e-07 |
| US electric grid | 2,4-Dinitrotoluene | model/secondary | 3.05e-10 | 1.78e-07 |
| Japanese Electric Grid | Benzo[b,j,k]fluoranthene | model/secondary | 2.96e-10 | 1.73e-07 |
| Fuel Oil #2 Prod. | Methyl tert-butyl ether | secondary | 2.92e-10 | 1.71e-07 |
| Fuel Oil #4 Prod. | Acrolein | secondary | 2.88e-10 | 1.68e-07 |
| US electric grid | Acenaphthylene | model/secondary | 2.74e-10 | 1.60e-07 |
| Fuel Oil #2 Prod. | Phenol | secondary | 2.56e-10 | 1.49e-07 |
| Japanese Electric Grid | Acenaphthylene | model/secondary | 2.51e-10 | 1.47e-07 |
| Japanese Electric Grid | 2,4-Dinitrotoluene | model/secondary | 2.43e-10 | 1.42e-07 |
| Fuel Oil #2 Prod. | Acetophenone | secondary | 2.40e-10 | 1.40e-07 |
| US electric grid | Anthracene | model/secondary | 2.37e-10 | 1.38e-07 |
| Fuel Oil #4 Prod. | n-Propane | secondary | 2.34e-10 | 1.37e-07 |
| Fuel Oil #2 Prod. | Methyl chloride | secondary | 2.34e-10 | 1.37e-07 |
| Fuel Oil #4 Prod. | o-xylene | secondary | 2.30e-10 | 1.35e-07 |
| Natural Gas Prod. | Styrene | secondary | 2.21e-10 | 1.29e-07 |
| Fuel Oil #6 Prod. | Cumene | secondary | 2.18e-10 | 1.27e-07 |

## Table M-17. CRT LCIA Results for the Photochemical Smog Impact Category

| Process Group | Material | LCI Data Type | Photo. Smog (kg ethene-equivalents) | % of Total |
|---|---|---|---|---|
| US electric grid | 2-Chloroacetophenone | model/secondary | 2.10e-10 | 1.23e-07 |
| Japanese Electric Grid | 2-Methylnaphthalene | model/secondary | 1.81e-10 | 1.06e-07 |
| Natural Gas Prod. | Benzyl chloride | secondary | 1.71e-10 | 9.97e-08 |
| Japanese Electric Grid | 2-Chloroacetophenone | model/secondary | 1.68e-10 | 9.83e-08 |
| Natural Gas Prod. | Methyl tert-butyl ether | secondary | 1.62e-10 | 9.45e-08 |
| Fuel Oil #4 Prod. | Ethylbenzene | secondary | 1.61e-10 | 9.43e-08 |
| Fuel Oil #4 Prod. | Bromomethane | secondary | 1.43e-10 | 8.33e-08 |
| Natural Gas Prod. | Phenol | secondary | 1.41e-10 | 8.26e-08 |
| Fuel Oil #6 Prod. | Aromatic hydrocarbons | secondary | 1.35e-10 | 7.90e-08 |
| Natural Gas Prod. | Acetophenone | secondary | 1.32e-10 | 7.75e-08 |
| Fuel Oil #6 Prod. | Phenanthrene | secondary | 1.30e-10 | 7.62e-08 |
| US electric grid | Benzo[b,j,k]fluoranthene | model/secondary | 1.29e-10 | 7.56e-08 |
| Natural Gas Prod. | Methyl chloride | secondary | 1.29e-10 | 7.55e-08 |
| Fuel Oil #2 Prod. | Dichloromethane | secondary | 1.28e-10 | 7.47e-08 |
| US electric grid | Chrysene | model/secondary | 1.24e-10 | 7.25e-08 |
| US electric grid | Benzo[a]anthracene | model/secondary | 1.13e-10 | 6.59e-08 |
| Fuel Oil #2 Prod. | Aromatic hydrocarbons | secondary | 1.12e-10 | 6.56e-08 |
| LPG Production | 5-Methyl chrysene | secondary | 1.12e-10 | 6.55e-08 |
| Fuel Oil #6 Prod. | Vinyl acetate | secondary | 9.15e-11 | 5.35e-08 |
| Fuel Oil #2 Prod. | Cumene | secondary | 8.47e-11 | 4.95e-08 |
| US electric grid | Indeno(1,2,3-cd)pyrene | model/secondary | 8.01e-11 | 4.68e-08 |
| Fuel Oil #4 Prod. | Naphthalene | secondary | 7.67e-11 | 4.49e-08 |
| Natural Gas Prod. | Dichloromethane | secondary | 7.07e-11 | 4.13e-08 |
| Fuel Oil #6 Prod. | Biphenyl | secondary | 6.98e-11 | 4.08e-08 |
| Fuel Oil #6 Prod. | Chloroform | secondary | 6.69e-11 | 3.91e-08 |
| Natural Gas Prod. | 1,4-Dichlorobenzene | secondary | 5.68e-11 | 3.32e-08 |
| Natural Gas Prod. | Phenanthrene | secondary | 5.36e-11 | 3.14e-08 |
| Fuel Oil #2 Prod. | Phenanthrene | secondary | 5.35e-11 | 3.13e-08 |
| Fuel Oil #6 Prod. | Tetrachloroethylene | secondary | 4.87e-11 | 2.85e-08 |
| Fuel Oil #6 Prod. | Ethyl Chloride | secondary | 4.76e-11 | 2.78e-08 |
| Natural Gas Prod. | Cumene | secondary | 4.68e-11 | 2.74e-08 |
| Fuel Oil #6 Prod. | 1,2-Dichloroethane | secondary | 4.53e-11 | 2.65e-08 |
| LPG Production | Polycyclic aromatic hydrocarbons | secondary | 4.44e-11 | 2.60e-08 |
| US electric grid | Benzo[g,h,i]perylene | model/secondary | 4.38e-11 | 2.56e-08 |
| Fuel Oil #4 Prod. | Styrene | secondary | 4.26e-11 | 2.49e-08 |
| US electric grid | Benzo[a]pyrene | model/secondary | 4.14e-11 | 2.42e-08 |
| Natural Gas Prod. | 2-Methylnaphthalene | secondary | 4.12e-11 | 2.41e-08 |
| Fuel Oil #6 Prod. | Fluorene | secondary | 4.08e-11 | 2.39e-08 |
| Fuel Oil #6 Prod. | 1,4-Dichlorobenzene | secondary | 3.60e-11 | 2.11e-08 |
| Fuel Oil #2 Prod. | Vinyl acetate | secondary | 3.56e-11 | 2.08e-08 |
| Japanese Electric Grid | Benzo[a]pyrene | model/secondary | 3.31e-11 | 1.93e-08 |
| Fuel Oil #4 Prod. | Benzyl chloride | secondary | 3.29e-11 | 1.92e-08 |
| Fuel Oil #6 Prod. | Fluoranthene | secondary | 3.28e-11 | 1.92e-08 |
| US electric grid | 2-Methylnaphthalene | model/secondary | 3.24e-11 | 1.89e-08 |
| Fuel Oil #4 Prod. | Methyl tert-butyl ether | secondary | 3.12e-11 | 1.82e-08 |
| Fuel Oil #4 Prod. | Phenol | secondary | 2.73e-11 | 1.59e-08 |
| Fuel Oil #2 Prod. | Biphenyl | secondary | 2.72e-11 | 1.59e-08 |
| Fuel Oil #6 Prod. | Acenaphthene | secondary | 2.65e-11 | 1.55e-08 |
| Fuel Oil #6 Prod. | 2-Methylnaphthalene | secondary | 2.61e-11 | 1.53e-08 |

## Table M-17. CRT LCIA Results for the Photochemical Smog Impact Category

| Process Group | Material | LCI Data Type | Photo. Smog (kg ethene-equivalents) | % of Total |
|---|---|---|---|---|
| Fuel Oil #2 Prod. | Chloroform | secondary | 2.60e-11 | 1.52e-08 |
| Fuel Oil #6 Prod. | Ethylene dibromide | secondary | 2.58e-11 | 1.51e-08 |
| Fuel Oil #4 Prod. | Acetophenone | secondary | 2.56e-11 | 1.49e-08 |
| Fuel Oil #6 Prod. | Chlorobenzene | secondary | 2.49e-11 | 1.46e-08 |
| Fuel Oil #4 Prod. | Methyl chloride | secondary | 2.49e-11 | 1.46e-08 |
| US electric grid | 5-Methyl chrysene | model/secondary | 2.40e-11 | 1.40e-08 |
| Fuel Oil #6 Prod. | 1,1,1-Trichloroethane | secondary | 2.27e-11 | 1.33e-08 |
| Natural Gas Prod. | Vinyl acetate | secondary | 1.97e-11 | 1.15e-08 |
| Fuel Oil #6 Prod. | Pyrene | secondary | 1.94e-11 | 1.13e-08 |
| Japanese Electric Grid | 5-Methyl chrysene | model/secondary | 1.91e-11 | 1.12e-08 |
| Fuel Oil #2 Prod. | Tetrachloroethylene | secondary | 1.90e-11 | 1.11e-08 |
| Fuel Oil #2 Prod. | 1,4-Dichlorobenzene | secondary | 1.87e-11 | 1.10e-08 |
| Fuel Oil #2 Prod. | Ethyl Chloride | secondary | 1.85e-11 | 1.08e-08 |
| Fuel Oil #2 Prod. | 1,2-Dichloroethane | secondary | 1.76e-11 | 1.03e-08 |
| Fuel Oil #2 Prod. | Fluorene | secondary | 1.64e-11 | 9.61e-09 |
| Natural Gas Prod. | Biphenyl | secondary | 1.50e-11 | 8.78e-09 |
| Natural Gas Prod. | Chloroform | secondary | 1.44e-11 | 8.41e-09 |
| Fuel Oil #4 Prod. | Dichloromethane | secondary | 1.36e-11 | 7.97e-09 |
| Fuel Oil #2 Prod. | 2-Methylnaphthalene | secondary | 1.36e-11 | 7.94e-09 |
| Fuel Oil #2 Prod. | Fluoranthene | secondary | 1.34e-11 | 7.82e-09 |
| Natural Gas Prod. | Fluorene | secondary | 1.31e-11 | 7.66e-09 |
| Fuel Oil #6 Prod. | Acenaphthylene | secondary | 1.23e-11 | 7.18e-09 |
| Fuel Oil #2 Prod. | Acenaphthene | secondary | 1.21e-11 | 7.09e-09 |
| Natural Gas Prod. | Pyrene | secondary | 1.17e-11 | 6.86e-09 |
| Natural Gas Prod. | Fluoranthene | secondary | 1.17e-11 | 6.84e-09 |
| Fuel Oil #6 Prod. | 2,4-Dinitrotoluene | secondary | 1.15e-11 | 6.73e-09 |
| Fuel Oil #6 Prod. | Anthracene | secondary | 1.14e-11 | 6.69e-09 |
| Natural Gas Prod. | Tetrachloroethylene | secondary | 1.05e-11 | 6.13e-09 |
| Natural Gas Prod. | Ethyl Chloride | secondary | 1.02e-11 | 5.98e-09 |
| Natural Gas Prod. | Acenaphthene | secondary | 1.01e-11 | 5.89e-09 |
| Fuel Oil #2 Prod. | Ethylene dibromide | secondary | 1.00e-11 | 5.86e-09 |
| Natural Gas Prod. | 1,2-Dichloroethane | secondary | 9.75e-12 | 5.70e-09 |
| Fuel Oil #2 Prod. | Chlorobenzene | secondary | 9.70e-12 | 5.67e-09 |
| Fuel Oil #4 Prod. | Aromatic hydrocarbons | secondary | 9.11e-12 | 5.33e-09 |
| Fuel Oil #4 Prod. | Cumene | secondary | 9.03e-12 | 5.28e-09 |
| Fuel Oil #2 Prod. | 1,1,1-Trichloroethane | secondary | 8.82e-12 | 5.15e-09 |
| Fuel Oil #2 Prod. | Pyrene | secondary | 8.40e-12 | 4.91e-09 |
| Fuel Oil #6 Prod. | 2-Chloroacetophenone | secondary | 7.94e-12 | 4.64e-09 |
| Fuel Oil #6 Prod. | Chrysene | secondary | 6.27e-12 | 3.67e-09 |
| Natural Gas Prod. | Anthracene | secondary | 6.11e-12 | 3.57e-09 |
| Fuel Oil #6 Prod. | Benzo[a]anthracene | secondary | 5.93e-12 | 3.47e-09 |
| Fuel Oil #4 Prod. | Phenanthrene | secondary | 5.57e-12 | 3.26e-09 |
| Natural Gas Prod. | Ethylene dibromide | secondary | 5.54e-12 | 3.24e-09 |
| Natural Gas Prod. | Chlorobenzene | secondary | 5.36e-12 | 3.13e-09 |
| Natural Gas Prod. | Acenaphthylene | secondary | 5.32e-12 | 3.11e-09 |
| Fuel Oil #2 Prod. | Acenaphthylene | secondary | 5.05e-12 | 2.95e-09 |
| Fuel Oil #2 Prod. | Anthracene | secondary | 4.88e-12 | 2.86e-09 |
| Natural Gas Prod. | 1,1,1-Trichloroethane | secondary | 4.87e-12 | 2.85e-09 |
| Fuel Oil #6 Prod. | Indeno(1,2,3-cd)pyrene | secondary | 4.65e-12 | 2.72e-09 |
| Fuel Oil #6 Prod. | Benzo[b,j,k]fluoranthene | secondary | 4.52e-12 | 2.64e-09 |

## Table M-17. CRT LCIA Results for the Photochemical Smog Impact Category

| Process Group | Material | LCI Data Type | Photo. Smog (kg ethene-equivalents) | % of Total |
|---|---|---|---|---|
| Fuel Oil #2 Prod. | 2,4-Dinitrotoluene | secondary | 4.47e-12 | 2.62e-09 |
| Natural Gas Prod. | Benzo[a]anthracene | secondary | 4.27e-12 | 2.49e-09 |
| Natural Gas Prod. | Chrysene | secondary | 4.11e-12 | 2.40e-09 |
| Fuel Oil #6 Prod. | Benzo[a]pyrene | secondary | 3.88e-12 | 2.27e-09 |
| Fuel Oil #4 Prod. | Vinyl acetate | secondary | 3.79e-12 | 2.22e-09 |
| Natural Gas Prod. | Indeno(1,2,3-cd)pyrene | secondary | 3.75e-12 | 2.19e-09 |
| Fuel Oil #2 Prod. | 2-Chloroacetophenone | secondary | 3.09e-12 | 1.80e-09 |
| Fuel Oil #4 Prod. | Biphenyl | secondary | 2.90e-12 | 1.69e-09 |
| Fuel Oil #2 Prod. | Benzo[a]anthracene | secondary | 2.86e-12 | 1.67e-09 |
| Fuel Oil #2 Prod. | Chrysene | secondary | 2.78e-12 | 1.63e-09 |
| Fuel Oil #4 Prod. | Chloroform | secondary | 2.77e-12 | 1.62e-09 |
| Fuel Oil #6 Prod. | Benzo[g,h,i]perylene | secondary | 2.61e-12 | 1.53e-09 |
| Natural Gas Prod. | 2,4-Dinitrotoluene | secondary | 2.47e-12 | 1.45e-09 |
| Natural Gas Prod. | Benzo[g,h,i]perylene | secondary | 2.43e-12 | 1.42e-09 |
| Natural Gas Prod. | Benzo[a]pyrene | secondary | 2.40e-12 | 1.40e-09 |
| Fuel Oil #2 Prod. | Indeno(1,2,3-cd)pyrene | secondary | 2.14e-12 | 1.25e-09 |
| Fuel Oil #4 Prod. | Tetrachloroethylene | secondary | 2.02e-12 | 1.18e-09 |
| Fuel Oil #4 Prod. | Ethyl Chloride | secondary | 1.97e-12 | 1.15e-09 |
| Fuel Oil #4 Prod. | 1,2-Dichloroethane | secondary | 1.88e-12 | 1.10e-09 |
| Fuel Oil #4 Prod. | 1,4-Dichlorobenzene | secondary | 1.77e-12 | 1.04e-09 |
| Fuel Oil #2 Prod. | Benzo[b,j,k]fluoranthene | secondary | 1.76e-12 | 1.03e-09 |
| Fuel Oil #4 Prod. | Fluorene | secondary | 1.73e-12 | 1.01e-09 |
| Natural Gas Prod. | 2-Chloroacetophenone | secondary | 1.71e-12 | 9.97e-10 |
| Fuel Oil #2 Prod. | Benzo[a]pyrene | secondary | 1.61e-12 | 9.41e-10 |
| Fuel Oil #4 Prod. | Fluoranthene | secondary | 1.40e-12 | 8.17e-10 |
| Fuel Oil #4 Prod. | 2-Methylnaphthalene | secondary | 1.28e-12 | 7.51e-10 |
| Fuel Oil #2 Prod. | Benzo[g,h,i]perylene | secondary | 1.27e-12 | 7.42e-10 |
| Fuel Oil #4 Prod. | Acenaphthene | secondary | 1.21e-12 | 7.05e-10 |
| Fuel Oil #4 Prod. | Ethylene dibromide | secondary | 1.07e-12 | 6.25e-10 |
| Fuel Oil #4 Prod. | Chlorobenzene | secondary | 1.03e-12 | 6.05e-10 |
| Natural Gas Prod. | Benzo[b,j,k]fluoranthene | secondary | 9.72e-13 | 5.68e-10 |
| Fuel Oil #4 Prod. | 1,1,1-Trichloroethane | secondary | 9.40e-13 | 5.50e-10 |
| Fuel Oil #6 Prod. | 5-Methyl chrysene | secondary | 9.04e-13 | 5.28e-10 |
| Fuel Oil #4 Prod. | Pyrene | secondary | 8.54e-13 | 4.99e-10 |
| Natural Gas Prod. | Aromatic hydrocarbons | secondary | 8.08e-13 | 4.72e-10 |
| Fuel Oil #4 Prod. | Acenaphthylene | secondary | 5.25e-13 | 3.07e-10 |
| Fuel Oil #4 Prod. | Anthracene | secondary | 5.00e-13 | 2.92e-10 |
| Fuel Oil #4 Prod. | 2,4-Dinitrotoluene | secondary | 4.77e-13 | 2.79e-10 |
| Fuel Oil #2 Prod. | 5-Methyl chrysene | secondary | 3.51e-13 | 2.05e-10 |
| Fuel Oil #4 Prod. | 2-Chloroacetophenone | secondary | 3.29e-13 | 1.92e-10 |
| Fuel Oil #4 Prod. | Chrysene | secondary | 2.80e-13 | 1.64e-10 |
| Fuel Oil #4 Prod. | Benzo[a]anthracene | secondary | 2.78e-13 | 1.63e-10 |
| Fuel Oil #4 Prod. | Indeno(1,2,3-cd)pyrene | secondary | 2.12e-13 | 1.24e-10 |
| Natural Gas Prod. | 5-Methyl chrysene | secondary | 1.94e-13 | 1.14e-10 |
| Fuel Oil #4 Prod. | Benzo[b,j,k]fluoranthene | secondary | 1.87e-13 | 1.10e-10 |
| Fuel Oil #4 Prod. | Benzo[a]pyrene | secondary | 1.67e-13 | 9.75e-11 |
| Fuel Oil #6 Prod. | Polycyclic aromatic hydrocarbons | secondary | 1.50e-13 | 8.78e-11 |
| Fuel Oil #2 Prod. | Polycyclic aromatic hydrocarbons | secondary | 1.25e-13 | 7.29e-11 |
| Fuel Oil #4 Prod. | Benzo[g,h,i]perylene | secondary | 1.23e-13 | 7.20e-11 |

## Table M-17. CRT LCIA Results for the Photochemical Smog Impact Category

| Process Group | Material | LCI Data Type | Photo. Smog (kg ethene-equivalents) | % of Total |
|---|---|---|---|---|
| Fuel Oil #4 Prod. | 5-Methyl chrysene | secondary | 3.75e-14 | 2.19e-11 |
| Fuel Oil #4 Prod. | Polycyclic aromatic hydrocarbons | secondary | 1.01e-14 | 5.92e-12 |
| Natural Gas Prod. | Polycyclic aromatic hydrocarbons | secondary | 8.98e-16 | 5.25e-13 |
| **Total Manufacturing** | | | **1.21e-01** | **7.07e+01** |
| **Use, Maintenance and Repair Life-cycle Stage** | | | | |
| US electric grid | Methane | model/secondary | 4.51e-03 | 2.64e+00 |
| US electric grid | Isophorone | model/secondary | 3.96e-05 | 2.31e-02 |
| US electric grid | Formaldehyde | model/secondary | 3.56e-05 | 2.08e-02 |
| US electric grid | Acetaldehyde | model/secondary | 2.26e-05 | 1.32e-02 |
| US electric grid | Benzene | model/secondary | 2.21e-05 | 1.29e-02 |
| US electric grid | Propionaldehyde | model/secondary | 2.05e-05 | 1.20e-02 |
| US electric grid | Methyl ethyl ketone | model/secondary | 1.65e-05 | 9.67e-03 |
| US electric grid | Toluene | model/secondary | 1.43e-05 | 8.37e-03 |
| US electric grid | Acrolein | model/secondary | 1.15e-05 | 6.74e-03 |
| US electric grid | Ethylbenzene | model/secondary | 6.44e-06 | 3.77e-03 |
| US electric grid | Bromomethane | model/secondary | 5.71e-06 | 3.34e-03 |
| US electric grid | Xylene (mixed isomers) | model/secondary | 2.53e-06 | 1.48e-03 |
| US electric grid | Hexane | model/secondary | 2.50e-06 | 1.46e-03 |
| US electric grid | Styrene | model/secondary | 1.71e-06 | 9.98e-04 |
| US electric grid | Naphthalene | model/secondary | 1.39e-06 | 8.14e-04 |
| US electric grid | Benzyl chloride | model/secondary | 1.32e-06 | 7.71e-04 |
| US electric grid | Methyl tert-butyl ether | model/secondary | 1.25e-06 | 7.30e-04 |
| US electric grid | Phenol | model/secondary | 1.09e-06 | 6.38e-04 |
| US electric grid | Acetophenone | model/secondary | 1.02e-06 | 5.99e-04 |
| US electric grid | Methyl chloride | model/secondary | 9.98e-07 | 5.84e-04 |
| US electric grid | Dichloromethane | model/secondary | 5.46e-07 | 3.19e-04 |
| US electric grid | Cumene | model/secondary | 3.62e-07 | 2.11e-04 |
| US electric grid | Phenanthrene | model/secondary | 1.91e-07 | 1.11e-04 |
| US electric grid | Vinyl acetate | model/secondary | 1.52e-07 | 8.89e-05 |
| US electric grid | Biphenyl | model/secondary | 1.16e-07 | 6.78e-05 |
| US electric grid | Chloroform | model/secondary | 1.11e-07 | 6.50e-05 |
| US electric grid | Tetrachloroethylene | model/secondary | 8.10e-08 | 4.73e-05 |
| US electric grid | Ethyl Chloride | model/secondary | 7.91e-08 | 4.62e-05 |
| US electric grid | 1,2-Dichloroethane | model/secondary | 7.53e-08 | 4.40e-05 |
| US electric grid | Fluorene | model/secondary | 6.39e-08 | 3.74e-05 |
| US electric grid | Fluoranthene | model/secondary | 5.11e-08 | 2.99e-05 |
| US electric grid | o-xylene | model/secondary | 4.34e-08 | 2.54e-05 |
| US electric grid | Acenaphthene | model/secondary | 4.32e-08 | 2.53e-05 |
| US electric grid | Ethylene dibromide | model/secondary | 4.28e-08 | 2.50e-05 |
| US electric grid | Chlorobenzene | model/secondary | 4.14e-08 | 2.42e-05 |
| US electric grid | 1,1,1-Trichloroethane | model/secondary | 4.03e-08 | 2.35e-05 |
| US electric grid | Pyrene | model/secondary | 2.53e-08 | 1.48e-05 |
| US electric grid | 2,4-Dinitrotoluene | model/secondary | 1.91e-08 | 1.12e-05 |
| US electric grid | Acenaphthylene | model/secondary | 1.72e-08 | 1.00e-05 |
| US electric grid | Anthracene | model/secondary | 1.48e-08 | 8.66e-06 |
| US electric grid | 2-Chloroacetophenone | model/secondary | 1.32e-08 | 7.71e-06 |
| US electric grid | Benzo[b,j,k]fluoranthene | model/secondary | 8.10e-09 | 4.73e-06 |
| US electric grid | Chrysene | model/secondary | 7.77e-09 | 4.54e-06 |
| US electric grid | Benzo[a]anthracene | model/secondary | 7.06e-09 | 4.13e-06 |
| US electric grid | Indeno(1,2,3-cd)pyrene | model/secondary | 5.02e-09 | 2.93e-06 |

## Table M-17. CRT LCIA Results for the Photochemical Smog Impact Category

| Process Group | Material | LCI Data Type | Photo. Smog (kg ethene-equivalents) | % of Total |
|---|---|---|---|---|
| US electric grid | Benzo[g,h,i]perylene | model/secondary | 2.74e-09 | 1.60e-06 |
| US electric grid | Benzo[a]pyrene | model/secondary | 2.59e-09 | 1.52e-06 |
| US electric grid | 2-Methylnaphthalene | model/secondary | 2.03e-09 | 1.19e-06 |
| US electric grid | 5-Methyl chrysene | model/secondary | 1.50e-09 | 8.78e-07 |
| **Total Use, Maintenance and Repair** | | | **4.72e-03** | **2.76e+00** |
| **End-of-life Life-cycle Stage** | | | | |
| CRT landfilling | Hydrocarbons, remaining unspeciated | primary | 1.07e-04 | 6.28e-02 |
| LPG Production | Hydrocarbons, remaining unspeciated | secondary | 5.37e-07 | 3.14e-04 |
| US electric grid | Methane | model/secondary | 4.52e-07 | 2.64e-04 |
| CRT landfilling | Methane | primary | 3.81e-07 | 2.23e-04 |
| LPG Production | Nonmethane hydrocarbons, remaining unspeciated | secondary | 3.66e-07 | 2.14e-04 |
| CRT landfilling | Benzene | primary | 1.28e-07 | 7.48e-05 |
| LPG Production | Methane | secondary | 5.07e-08 | 2.96e-05 |
| CRT landfilling | Toluene | primary | 2.69e-08 | 1.57e-05 |
| LPG Production | Benzene | secondary | 2.34e-08 | 1.37e-05 |
| CRT landfilling | Xylene (mixed isomers) | primary | 1.88e-08 | 1.10e-05 |
| LPG Production | Aldehydes | secondary | 5.71e-09 | 3.34e-06 |
| LPG Production | Formaldehyde | secondary | 4.25e-09 | 2.49e-06 |
| US electric grid | Isophorone | model/secondary | 3.96e-09 | 2.32e-06 |
| CRT landfilling | Ethylbenzene | primary | 3.75e-09 | 2.19e-06 |
| US electric grid | Formaldehyde | model/secondary | 3.56e-09 | 2.08e-06 |
| LPG Production | Ethane | secondary | 2.66e-09 | 1.56e-06 |
| LPG Production | Pentane | secondary | 2.29e-09 | 1.34e-06 |
| US electric grid | Acetaldehyde | model/secondary | 2.27e-09 | 1.32e-06 |
| US electric grid | Benzene | model/secondary | 2.21e-09 | 1.29e-06 |
| US electric grid | Propionaldehyde | model/secondary | 2.06e-09 | 1.20e-06 |
| LPG Production | Butane | secondary | 1.81e-09 | 1.06e-06 |
| US electric grid | Methyl ethyl ketone | model/secondary | 1.66e-09 | 9.68e-07 |
| LPG Production | Hexane | secondary | 1.62e-09 | 9.47e-07 |
| US electric grid | Toluene | model/secondary | 1.43e-09 | 8.37e-07 |
| US electric grid | Acrolein | model/secondary | 1.15e-09 | 6.74e-07 |
| US electric grid | Ethylbenzene | model/secondary | 6.44e-10 | 3.77e-07 |
| US electric grid | Bromomethane | model/secondary | 5.71e-10 | 3.34e-07 |
| US electric grid | Xylene (mixed isomers) | model/secondary | 2.53e-10 | 1.48e-07 |
| US electric grid | Hexane | model/secondary | 2.50e-10 | 1.46e-07 |
| US electric grid | Styrene | model/secondary | 1.71e-10 | 9.98e-08 |
| US electric grid | Naphthalene | model/secondary | 1.39e-10 | 8.14e-08 |
| US electric grid | Benzyl chloride | model/secondary | 1.32e-10 | 7.71e-08 |
| US electric grid | Methyl tert-butyl ether | model/secondary | 1.25e-10 | 7.31e-08 |
| US electric grid | Phenol | model/secondary | 1.09e-10 | 6.39e-08 |
| US electric grid | Acetophenone | model/secondary | 1.02e-10 | 5.99e-08 |
| US electric grid | Methyl chloride | model/secondary | 9.99e-11 | 5.84e-08 |
| CRT Incineration | Trichloroethylene | secondary | 9.69e-11 | 5.67e-08 |
| CRT landfilling | Trichloroethylene | primary | 9.04e-11 | 5.28e-08 |
| CRT Incineration | Vinyl chloride | secondary | 6.16e-11 | 3.60e-08 |
| CRT landfilling | Vinyl chloride | primary | 5.74e-11 | 3.36e-08 |
| US electric grid | Dichloromethane | model/secondary | 5.46e-11 | 3.19e-08 |
| CRT landfilling | Dichloromethane | primary | 4.60e-11 | 2.69e-08 |
| US electric grid | Cumene | model/secondary | 3.62e-11 | 2.12e-08 |

## Table M-17. CRT LCIA Results for the Photochemical Smog Impact Category

| Process Group | Material | LCI Data Type | Photo. Smog (kg ethene-equivalents) | % of Total |
|---|---|---|---|---|
| CRT Incineration | Carbon tetrachloride | secondary | 3.08e-11 | 1.80e-08 |
| CRT landfilling | 1,2-Dichloroethane | primary | 2.87e-11 | 1.68e-08 |
| CRT landfilling | Carbon tetrachloride | primary | 2.87e-11 | 1.68e-08 |
| CRT landfilling | Chloroform | primary | 2.87e-11 | 1.68e-08 |
| CRT landfilling | Tetrachloroethylene | primary | 2.87e-11 | 1.68e-08 |
| LPG Production | Isophorone | secondary | 2.55e-11 | 1.49e-08 |
| US electric grid | Phenanthrene | model/secondary | 1.91e-11 | 1.12e-08 |
| LPG Production | Toluene | secondary | 1.81e-11 | 1.06e-08 |
| US electric grid | Vinyl acetate | model/secondary | 1.52e-11 | 8.89e-09 |
| LPG Production | Acetaldehyde | secondary | 1.46e-11 | 8.53e-09 |
| LPG Production | Propionaldehyde | secondary | 1.32e-11 | 7.74e-09 |
| US electric grid | Biphenyl | model/secondary | 1.16e-11 | 6.79e-09 |
| US electric grid | Chloroform | model/secondary | 1.11e-11 | 6.50e-09 |
| LPG Production | Methyl ethyl ketone | secondary | 1.07e-11 | 6.23e-09 |
| US electric grid | Tetrachloroethylene | model/secondary | 8.10e-12 | 4.74e-09 |
| US electric grid | Ethyl Chloride | model/secondary | 7.91e-12 | 4.63e-09 |
| US electric grid | 1,2-Dichloroethane | model/secondary | 7.54e-12 | 4.41e-09 |
| LPG Production | Acrolein | secondary | 7.42e-12 | 4.34e-09 |
| LPG Production | o-xylene | secondary | 6.78e-12 | 3.96e-09 |
| US electric grid | Fluorene | model/secondary | 6.39e-12 | 3.74e-09 |
| LPG Production | n-Propane | secondary | 6.05e-12 | 3.54e-09 |
| US electric grid | Fluoranthene | model/secondary | 5.11e-12 | 2.99e-09 |
| US electric grid | o-xylene | model/secondary | 4.35e-12 | 2.54e-09 |
| US electric grid | Acenaphthene | model/secondary | 4.32e-12 | 2.53e-09 |
| US electric grid | Ethylene dibromide | model/secondary | 4.29e-12 | 2.51e-09 |
| LPG Production | Ethylbenzene | secondary | 4.17e-12 | 2.44e-09 |
| US electric grid | Chlorobenzene | model/secondary | 4.15e-12 | 2.42e-09 |
| US electric grid | 1,1,1-Trichloroethane | model/secondary | 4.03e-12 | 2.36e-09 |
| LPG Production | Bromomethane | secondary | 3.68e-12 | 2.15e-09 |
| US electric grid | Pyrene | model/secondary | 2.54e-12 | 1.48e-09 |
| LPG Production | Naphthalene | secondary | 2.29e-12 | 1.34e-09 |
| US electric grid | 2,4-Dinitrotoluene | model/secondary | 1.91e-12 | 1.12e-09 |
| US electric grid | Acenaphthylene | model/secondary | 1.72e-12 | 1.00e-09 |
| US electric grid | Anthracene | model/secondary | 1.48e-12 | 8.67e-10 |
| US electric grid | 2-Chloroacetophenone | model/secondary | 1.32e-12 | 7.71e-10 |
| LPG Production | Styrene | secondary | 1.10e-12 | 6.42e-10 |
| LPG Production | Benzyl chloride | secondary | 8.49e-13 | 4.96e-10 |
| US electric grid | Benzo[b,j,k]fluoranthene | model/secondary | 8.10e-13 | 4.74e-10 |
| LPG Production | Methyl tert-butyl ether | secondary | 8.05e-13 | 4.70e-10 |
| US electric grid | Chrysene | model/secondary | 7.78e-13 | 4.55e-10 |
| US electric grid | Benzo[a]anthracene | model/secondary | 7.06e-13 | 4.13e-10 |
| LPG Production | Phenol | secondary | 7.03e-13 | 4.11e-10 |
| LPG Production | Acetophenone | secondary | 6.59e-13 | 3.85e-10 |
| LPG Production | Methyl chloride | secondary | 6.43e-13 | 3.76e-10 |
| US electric grid | Indeno(1,2,3-cd)pyrene | model/secondary | 5.02e-13 | 2.93e-10 |
| LPG Production | Dichloromethane | secondary | 3.52e-13 | 2.06e-10 |
| LPG Production | Aromatic hydrocarbons | secondary | 3.45e-13 | 2.02e-10 |
| US electric grid | Benzo[g,h,i]perylene | model/secondary | 2.74e-13 | 1.60e-10 |
| US electric grid | Benzo[a]pyrene | model/secondary | 2.59e-13 | 1.52e-10 |
| LPG Production | Cumene | secondary | 2.33e-13 | 1.36e-10 |

## Table M-17. CRT LCIA Results for the Photochemical Smog Impact Category

| Process Group | Material | LCI Data Type | Photo. Smog (kg ethene-equivalents) | % of Total |
|---|---|---|---|---|
| US electric grid | 2-Methylnaphthalene | model/secondary | 2.03e-13 | 1.19e-10 |
| US electric grid | 5-Methyl chrysene | model/secondary | 1.50e-13 | 8.78e-11 |
| LPG Production | Phenanthrene | secondary | 1.49e-13 | 8.70e-11 |
| LPG Production | Vinyl acetate | secondary | 9.79e-14 | 5.72e-11 |
| LPG Production | Biphenyl | secondary | 7.47e-14 | 4.37e-11 |
| LPG Production | Chloroform | secondary | 7.16e-14 | 4.18e-11 |
| LPG Production | 1,4-Dichlorobenzene | secondary | 5.44e-14 | 3.18e-11 |
| LPG Production | Tetrachloroethylene | secondary | 5.22e-14 | 3.05e-11 |
| LPG Production | Ethyl Chloride | secondary | 5.09e-14 | 2.98e-11 |
| LPG Production | 1,2-Dichloroethane | secondary | 4.85e-14 | 2.84e-11 |
| LPG Production | Fluorene | secondary | 4.56e-14 | 2.66e-11 |
| LPG Production | 2-Methylnaphthalene | secondary | 3.94e-14 | 2.31e-11 |
| LPG Production | Fluoranthene | secondary | 3.72e-14 | 2.17e-11 |
| LPG Production | Acenaphthene | secondary | 3.44e-14 | 2.01e-11 |
| LPG Production | Ethylene dibromide | secondary | 2.76e-14 | 1.61e-11 |
| LPG Production | Chlorobenzene | secondary | 2.67e-14 | 1.56e-11 |
| LPG Production | 1,1,1-Trichloroethane | secondary | 2.43e-14 | 1.42e-11 |
| LPG Production | Pyrene | secondary | 2.36e-14 | 1.38e-11 |
| LPG Production | Acenaphthylene | secondary | 1.41e-14 | 8.22e-12 |
| LPG Production | Anthracene | secondary | 1.37e-14 | 8.01e-12 |
| LPG Production | 2,4-Dinitrotoluene | secondary | 1.23e-14 | 7.20e-12 |
| LPG Production | 2-Chloroacetophenone | secondary | 8.49e-15 | 4.96e-12 |
| LPG Production | Benzo[a]anthracene | secondary | 8.20e-15 | 4.79e-12 |
| LPG Production | Chrysene | secondary | 7.87e-15 | 4.60e-12 |
| LPG Production | Indeno(1,2,3-cd)pyrene | secondary | 6.10e-15 | 3.57e-12 |
| LPG Production | Benzo[b,j,k]fluoranthene | secondary | 4.83e-15 | 2.83e-12 |
| LPG Production | Benzo[a]pyrene | secondary | 4.49e-15 | 2.62e-12 |
| LPG Production | Benzo[g,h,i]perylene | secondary | 3.65e-15 | 2.13e-12 |
| LPG Production | 5-Methyl chrysene | secondary | 9.67e-16 | 5.65e-13 |
| LPG Production | Polycyclic aromatic hydrocarbons | secondary | 3.83e-16 | 2.24e-13 |
| Natural Gas Prod. | Polycyclic aromatic hydrocarbons | secondary | -4.51e-16 | -2.63e-13 |
| CRT Incineration | Polycyclic aromatic hydrocarbons | secondary | -6.98e-15 | -4.08e-12 |
| Natural Gas Prod. | 5-Methyl chrysene | secondary | -9.74e-14 | -5.70e-11 |
| Fuel Oil #4 Prod. | Polycyclic aromatic hydrocarbons | secondary | -1.09e-13 | -6.36e-11 |
| Fuel Oil #4 Prod. | 5-Methyl chrysene | secondary | -4.03e-13 | -2.36e-10 |
| Natural Gas Prod. | Aromatic hydrocarbons | secondary | -4.05e-13 | -2.37e-10 |
| Natural Gas Prod. | Benzo[b,j,k]fluoranthene | secondary | -4.87e-13 | -2.85e-10 |
| Natural Gas Prod. | 2-Chloroacetophenone | secondary | -8.56e-13 | -5.00e-10 |
| Natural Gas Prod. | Benzo[a]pyrene | secondary | -1.20e-12 | -7.02e-10 |
| Natural Gas Prod. | Benzo[g,h,i]perylene | secondary | -1.22e-12 | -7.12e-10 |
| Natural Gas Prod. | 2,4-Dinitrotoluene | secondary | -1.24e-12 | -7.25e-10 |
| Fuel Oil #4 Prod. | Benzo[g,h,i]perylene | secondary | -1.32e-12 | -7.74e-10 |
| Fuel Oil #4 Prod. | Benzo[a]pyrene | secondary | -1.79e-12 | -1.05e-09 |
| Natural Gas Prod. | Indeno(1,2,3-cd)pyrene | secondary | -1.88e-12 | -1.10e-09 |
| Fuel Oil #4 Prod. | Benzo[b,j,k]fluoranthene | secondary | -2.01e-12 | -1.18e-09 |
| Natural Gas Prod. | Chrysene | secondary | -2.06e-12 | -1.21e-09 |
| Natural Gas Prod. | Benzo[a]anthracene | secondary | -2.14e-12 | -1.25e-09 |
| Fuel Oil #4 Prod. | Indeno(1,2,3-cd)pyrene | secondary | -2.28e-12 | -1.34e-09 |
| Natural Gas Prod. | 1,1,1-Trichloroethane | secondary | -2.44e-12 | -1.43e-09 |

## Table M-17. CRT LCIA Results for the Photochemical Smog Impact Category

| Process Group | Material | LCI Data Type | Photo. Smog (kg ethene-equivalents) | % of Total |
|---|---|---|---|---|
| Natural Gas Prod. | Acenaphthylene | secondary | -2.67e-12 | -1.56e-09 |
| Natural Gas Prod. | Chlorobenzene | secondary | -2.69e-12 | -1.57e-09 |
| Natural Gas Prod. | Ethylene dibromide | secondary | -2.78e-12 | -1.63e-09 |
| Fuel Oil #4 Prod. | Benzo[a]anthracene | secondary | -2.99e-12 | -1.75e-09 |
| Fuel Oil #4 Prod. | Chrysene | secondary | -3.01e-12 | -1.76e-09 |
| Natural Gas Prod. | Anthracene | secondary | -3.07e-12 | -1.79e-09 |
| Fuel Oil #4 Prod. | 2-Chloroacetophenone | secondary | -3.54e-12 | -2.07e-09 |
| Natural Gas Prod. | 1,2-Dichloroethane | secondary | -4.89e-12 | -2.86e-09 |
| Natural Gas Prod. | Acenaphthene | secondary | -5.05e-12 | -2.95e-09 |
| Fuel Oil #4 Prod. | 2,4-Dinitrotoluene | secondary | -5.13e-12 | -3.00e-09 |
| Natural Gas Prod. | Ethyl Chloride | secondary | -5.13e-12 | -3.00e-09 |
| Natural Gas Prod. | Tetrachloroethylene | secondary | -5.26e-12 | -3.07e-09 |
| Fuel Oil #4 Prod. | Anthracene | secondary | -5.38e-12 | -3.14e-09 |
| Fuel Oil #4 Prod. | Acenaphthylene | secondary | -5.64e-12 | -3.30e-09 |
| Natural Gas Prod. | Fluoranthene | secondary | -5.87e-12 | -3.43e-09 |
| Natural Gas Prod. | Pyrene | secondary | -5.89e-12 | -3.44e-09 |
| CRT Incineration | Aromatic hydrocarbons | secondary | -6.29e-12 | -3.68e-09 |
| Natural Gas Prod. | Fluorene | secondary | -6.57e-12 | -3.84e-09 |
| CRT Incineration | 2-Methylnaphthalene | secondary | -6.63e-12 | -3.88e-09 |
| Natural Gas Prod. | Chloroform | secondary | -7.21e-12 | -4.22e-09 |
| Natural Gas Prod. | Biphenyl | secondary | -7.53e-12 | -4.40e-09 |
| CRT Incineration | Dichlorobenzene (mixed isomers) | secondary | -9.15e-12 | -5.35e-09 |
| Fuel Oil #4 Prod. | Pyrene | secondary | -9.18e-12 | -5.37e-09 |
| Natural Gas Prod. | Vinyl acetate | secondary | -9.86e-12 | -5.77e-09 |
| Fuel Oil #4 Prod. | 1,1,1-Trichloroethane | secondary | -1.01e-11 | -5.91e-09 |
| Fuel Oil #4 Prod. | Chlorobenzene | secondary | -1.11e-11 | -6.50e-09 |
| Fuel Oil #4 Prod. | Ethylene dibromide | secondary | -1.15e-11 | -6.72e-09 |
| Fuel Oil #4 Prod. | Acenaphthene | secondary | -1.30e-11 | -7.58e-09 |
| Fuel Oil #4 Prod. | 2-Methylnaphthalene | secondary | -1.38e-11 | -8.07e-09 |
| Fuel Oil #4 Prod. | Fluoranthene | secondary | -1.50e-11 | -8.78e-09 |
| Fuel Oil #4 Prod. | Fluorene | secondary | -1.85e-11 | -1.08e-08 |
| Fuel Oil #4 Prod. | 1,4-Dichlorobenzene | secondary | -1.91e-11 | -1.11e-08 |
| Fuel Oil #4 Prod. | 1,2-Dichloroethane | secondary | -2.02e-11 | -1.18e-08 |
| Natural Gas Prod. | 2-Methylnaphthalene | secondary | -2.06e-11 | -1.21e-08 |
| Fuel Oil #4 Prod. | Ethyl Chloride | secondary | -2.12e-11 | -1.24e-08 |
| Fuel Oil #4 Prod. | Tetrachloroethylene | secondary | -2.17e-11 | -1.27e-08 |
| Natural Gas Prod. | Cumene | secondary | -2.35e-11 | -1.37e-08 |
| CRT Incineration | 5-Methyl chrysene | secondary | -2.49e-11 | -1.46e-08 |
| Natural Gas Prod. | Phenanthrene | secondary | -2.69e-11 | -1.57e-08 |
| Natural Gas Prod. | 1,4-Dichlorobenzene | secondary | -2.85e-11 | -1.67e-08 |
| Fuel Oil #4 Prod. | Chloroform | secondary | -2.98e-11 | -1.74e-08 |
| CRT Incineration | Benzo[g,h,i]perylene | secondary | -3.09e-11 | -1.81e-08 |
| Fuel Oil #4 Prod. | Biphenyl | secondary | -3.11e-11 | -1.82e-08 |
| Natural Gas Prod. | Dichloromethane | secondary | -3.54e-11 | -2.07e-08 |
| Fuel Oil #4 Prod. | Vinyl acetate | secondary | -4.08e-11 | -2.38e-08 |
| CRT Incineration | Benzo[a]pyrene | secondary | -4.34e-11 | -2.53e-08 |
| Fuel Oil #4 Prod. | Phenanthrene | secondary | -5.99e-11 | -3.50e-08 |
| Natural Gas Prod. | Methyl chloride | secondary | -6.48e-11 | -3.79e-08 |
| Natural Gas Prod. | Acetophenone | secondary | -6.64e-11 | -3.88e-08 |
| CRT Incineration | Indeno(1,2,3-cd)pyrene | secondary | -6.95e-11 | -4.07e-08 |

## Table M-17. CRT LCIA Results for the Photochemical Smog Impact Category

| Process Group | Material | LCI Data Type | Photo. Smog (kg ethene-equivalents) | % of Total |
|---|---|---|---|---|
| Natural Gas Prod. | Phenol | secondary | -7.09e-11 | -4.14e-08 |
| Natural Gas Prod. | Methyl tert-butyl ether | secondary | -8.11e-11 | -4.74e-08 |
| Natural Gas Prod. | Benzyl chloride | secondary | -8.56e-11 | -5.00e-08 |
| CRT Incineration | Benzo[a]anthracene | secondary | -9.11e-11 | -5.32e-08 |
| Fuel Oil #4 Prod. | Cumene | secondary | -9.70e-11 | -5.67e-08 |
| Fuel Oil #4 Prod. | Aromatic hydrocarbons | secondary | -9.80e-11 | -5.73e-08 |
| Natural Gas Prod. | Styrene | secondary | -1.11e-10 | -6.47e-08 |
| CRT Incineration | Chrysene | secondary | -1.14e-10 | -6.65e-08 |
| CRT Incineration | Benzo[b,j,k]fluoranthene | secondary | -1.24e-10 | -7.28e-08 |
| Fuel Oil #4 Prod. | Dichloromethane | secondary | -1.47e-10 | -8.57e-08 |
| CRT Incineration | Anthracene | secondary | -2.38e-10 | -1.39e-07 |
| Fuel Oil #4 Prod. | Methyl chloride | secondary | -2.68e-10 | -1.57e-07 |
| Fuel Oil #4 Prod. | Acetophenone | secondary | -2.75e-10 | -1.61e-07 |
| CRT Incineration | Acenaphthylene | secondary | -2.83e-10 | -1.66e-07 |
| Fuel Oil #4 Prod. | Phenol | secondary | -2.93e-10 | -1.71e-07 |
| CRT Incineration | 2,4-Dinitrotoluene | secondary | -3.17e-10 | -1.85e-07 |
| Fuel Oil #4 Prod. | Methyl tert-butyl ether | secondary | -3.35e-10 | -1.96e-07 |
| Fuel Oil #4 Prod. | Benzyl chloride | secondary | -3.54e-10 | -2.07e-07 |
| Natural Gas Prod. | Bromomethane | secondary | -3.71e-10 | -2.17e-07 |
| CRT Incineration | Pyrene | secondary | -3.75e-10 | -2.19e-07 |
| Natural Gas Prod. | Ethylbenzene | secondary | -4.21e-10 | -2.46e-07 |
| Fuel Oil #4 Prod. | Styrene | secondary | -4.58e-10 | -2.68e-07 |
| CRT Incineration | Acenaphthene | secondary | -5.78e-10 | -3.38e-07 |
| CRT Incineration | 1,1,1-Trichloroethane | secondary | -6.24e-10 | -3.65e-07 |
| Natural Gas Prod. | n-Propane | secondary | -6.72e-10 | -3.93e-07 |
| Natural Gas Prod. | Naphthalene | secondary | -6.72e-10 | -3.93e-07 |
| CRT Incineration | Chlorobenzene | secondary | -6.87e-10 | -4.02e-07 |
| CRT Incineration | Ethylene dibromide | secondary | -7.10e-10 | -4.15e-07 |
| Natural Gas Prod. | Acrolein | secondary | -7.48e-10 | -4.37e-07 |
| CRT Incineration | Fluoranthene | secondary | -8.04e-10 | -4.70e-07 |
| Fuel Oil #4 Prod. | Naphthalene | secondary | -8.25e-10 | -4.82e-07 |
| CRT Incineration | Fluorene | secondary | -1.03e-09 | -6.02e-07 |
| Natural Gas Prod. | Methyl ethyl ketone | secondary | -1.07e-09 | -6.28e-07 |
| CRT Incineration | 1,2-Dichloroethane | secondary | -1.22e-09 | -7.12e-07 |
| CRT Incineration | Ethyl Chloride | secondary | -1.31e-09 | -7.67e-07 |
| CRT Incineration | Tetrachloroethylene | secondary | -1.31e-09 | -7.67e-07 |
| Natural Gas Prod. | Propionaldehyde | secondary | -1.33e-09 | -7.80e-07 |
| Natural Gas Prod. | Acetaldehyde | secondary | -1.47e-09 | -8.59e-07 |
| Fuel Oil #4 Prod. | Bromomethane | secondary | -1.53e-09 | -8.96e-07 |
| Fuel Oil #4 Prod. | Ethylbenzene | secondary | -1.73e-09 | -1.01e-06 |
| CRT Incineration | Chloroform | secondary | -1.81e-09 | -1.06e-06 |
| CRT Incineration | Biphenyl | secondary | -1.92e-09 | -1.12e-06 |
| Fuel Oil #4 Prod. | o-xylene | secondary | -2.47e-09 | -1.45e-06 |
| Fuel Oil #4 Prod. | n-Propane | secondary | -2.51e-09 | -1.47e-06 |
| CRT Incineration | Vinyl acetate | secondary | -2.52e-09 | -1.47e-06 |
| Natural Gas Prod. | Isophorone | secondary | -2.57e-09 | -1.50e-06 |
| CRT Incineration | Phenanthrene | secondary | -3.06e-09 | -1.79e-06 |
| Fuel Oil #4 Prod. | Acrolein | secondary | -3.09e-09 | -1.81e-06 |
| Fuel Oil #4 Prod. | Methyl ethyl ketone | secondary | -4.44e-09 | -2.60e-06 |

## Table M-17. CRT LCIA Results for the Photochemical Smog Impact Category

| Process Group | Material | LCI Data Type | Photo. Smog (kg ethene-equivalents) | % of Total |
|---|---|---|---|---|
| Fuel Oil #4 Prod. | Propionaldehyde | secondary | -5.51e-09 | -3.22e-06 |
| CRT Incineration | Cumene | secondary | -6.00e-09 | -3.51e-06 |
| Fuel Oil #4 Prod. | Acetaldehyde | secondary | -6.08e-09 | -3.55e-06 |
| Fuel Oil #4 Prod. | Toluene | secondary | -6.85e-09 | -4.00e-06 |
| CRT Incineration | Dichloromethane | secondary | -9.01e-09 | -5.27e-06 |
| Fuel Oil #4 Prod. | Isophorone | secondary | -1.06e-08 | -6.21e-06 |
| Natural Gas Prod. | Toluene | secondary | -1.46e-08 | -8.52e-06 |
| CRT Incineration | Methyl chloride | secondary | -1.65e-08 | -9.67e-06 |
| CRT Incineration | Acetophenone | secondary | -1.70e-08 | -9.92e-06 |
| CRT Incineration | Phenol | secondary | -1.81e-08 | -1.06e-05 |
| CRT Incineration | Methyl tert-butyl ether | secondary | -2.07e-08 | -1.21e-05 |
| CRT Incineration | Naphthalene | secondary | -2.09e-08 | -1.22e-05 |
| CRT Incineration | Benzyl chloride | secondary | -2.19e-08 | -1.28e-05 |
| CRT Incineration | Xylene (mixed isomers) | secondary | -2.44e-08 | -1.43e-05 |
| Natural Gas Prod. | o-xylene | secondary | -2.64e-08 | -1.54e-05 |
| CRT Incineration | Styrene | secondary | -2.83e-08 | -1.65e-05 |
| Natural Gas Prod. | Formaldehyde | secondary | -5.11e-08 | -2.99e-05 |
| CRT Incineration | Bromomethane | secondary | -9.47e-08 | -5.54e-05 |
| CRT Incineration | Ethylbenzene | secondary | -1.03e-07 | -6.00e-05 |
| CRT Incineration | n-Propane | secondary | -1.52e-07 | -8.90e-05 |
| CRT Incineration | Acrolein | secondary | -1.91e-07 | -1.12e-04 |
| CRT Incineration | Toluene | secondary | -2.25e-07 | -1.31e-04 |
| CRT Incineration | Methyl ethyl ketone | secondary | -2.74e-07 | -1.60e-04 |
| CRT Incineration | Butane | secondary | -3.03e-07 | -1.77e-04 |
| CRT Incineration | Hexane | secondary | -3.13e-07 | -1.83e-04 |
| CRT Incineration | Propionaldehyde | secondary | -3.41e-07 | -1.99e-04 |
| CRT Incineration | Acetaldehyde | secondary | -3.75e-07 | -2.20e-04 |
| CRT Incineration | Pentane | secondary | -3.85e-07 | -2.25e-04 |
| CRT Incineration | Ethane | secondary | -4.48e-07 | -2.62e-04 |
| Fuel Oil #4 Prod. | Hexane | secondary | -5.67e-07 | -3.31e-04 |
| Fuel Oil #4 Prod. | Butane | secondary | -6.32e-07 | -3.69e-04 |
| CRT Incineration | Isophorone | secondary | -6.56e-07 | -3.84e-04 |
| Fuel Oil #4 Prod. | Pentane | secondary | -8.02e-07 | -4.69e-04 |
| Natural Gas Prod. | Hexane | secondary | -8.46e-07 | -4.95e-04 |
| Fuel Oil #4 Prod. | Ethane | secondary | -9.33e-07 | -5.45e-04 |
| Natural Gas Prod. | Butane | secondary | -9.45e-07 | -5.52e-04 |
| Natural Gas Prod. | Pentane | secondary | -1.20e-06 | -7.01e-04 |
| Natural Gas Prod. | Ethane | secondary | -1.39e-06 | -8.15e-04 |
| CRT Incineration | Formaldehyde | secondary | -1.64e-06 | -9.60e-04 |
| Fuel Oil #4 Prod. | Aldehydes | secondary | -2.00e-06 | -1.17e-03 |
| Fuel Oil #4 Prod. | Formaldehyde | secondary | -2.03e-06 | -1.19e-03 |
| Natural Gas Prod. | Aldehydes | secondary | -2.39e-06 | -1.40e-03 |
| Fuel Oil #4 Prod. | Benzene | secondary | -8.19e-06 | -4.79e-03 |
| CRT Incineration | Benzene | secondary | -1.00e-05 | -5.87e-03 |
| Natural Gas Prod. | Hydrocarbons, remaining unspeciated | secondary | -1.24e-05 | -7.26e-03 |
| Fuel Oil #4 Prod. | Methane | secondary | -1.96e-05 | -1.15e-02 |
| CRT Incineration | Aldehydes | secondary | -6.76e-05 | -3.95e-02 |
| CRT Incineration | Methane | secondary | -1.06e-04 | -6.20e-02 |
| CRT Incineration | Hydrocarbons, remaining unspeciated | secondary | -1.07e-04 | -6.27e-02 |
| Natural Gas Prod. | Benzene | secondary | -1.20e-04 | -7.02e-02 |

## Table M-17. CRT LCIA Results for the Photochemical Smog Impact Category

| Process Group | Material | LCI Data Type | Photo. Smog (kg ethene-equivalents) | % of Total |
|---|---|---|---|---|
| CRT Incineration | Nonmethane hydrocarbons, remaining unspeciated | secondary | -1.54e-04 | -9.02e-02 |
| Fuel Oil #4 Prod. | Nonmethane hydrocarbons, remaining unspeciated | secondary | -1.56e-04 | -9.11e-02 |
| Natural Gas Prod. | Methane | secondary | -1.76e-04 | -1.03e-01 |
| Fuel Oil #4 Prod. | Hydrocarbons, remaining unspeciated | secondary | -2.32e-04 | -1.36e-01 |
| Natural Gas Prod. | Nonmethane hydrocarbons, remaining unspeciated | secondary | -4.52e-04 | -2.64e-01 |
| **Total End-of-life** | | | **-1.53e-03** | **-8.95e-01** |
| **Total All Life-cycle Stages** | | | **1.71e-01** | **1.00e+02** |

## Table M-18. LCD LCIA Results for the Photochemical Smog Impact Category

| Process Group | Material | LCI Data Type | Photo. Smog (kg ethene-equivalents) | % of Total |
|---|---|---|---|---|
| **Materials Processing Life-cycle Stage** | | | | |
| Natural Gas Prod. | Nonmethane hydrocarbons, remaining unspeciated | secondary | 6.30e-02 | 4.45e+01 |
| Natural Gas Prod. | Methane | secondary | 2.45e-02 | 1.73e+01 |
| Natural Gas Prod. | Benzene | secondary | 1.67e-02 | 1.18e+01 |
| Steel Prod., cold-rolled, semi-finished | Nonmethane hydrocarbons, remaining unspeciated | secondary | 1.62e-02 | 1.15e+01 |
| Natural Gas Prod. | Hydrocarbons, remaining unspeciated | secondary | 1.73e-03 | 1.22e+00 |
| Steel Prod., cold-rolled, semi-finished | Hydrocarbons, remaining unspeciated | secondary | 1.68e-03 | 1.19e+00 |
| PMMA Sheet Prod. | Nonmethane hydrocarbons, remaining unspeciated | secondary | 1.24e-03 | 8.74e-01 |
| Polycarbonate Production | Nonmethane hydrocarbons, remaining unspeciated | secondary | 1.03e-03 | 7.26e-01 |
| Aluminum Prod. | Nonmethane hydrocarbons, remaining unspeciated | secondary | 5.48e-04 | 3.87e-01 |
| PET Resin Production | Nonmethane hydrocarbons, remaining unspeciated | secondary | 5.06e-04 | 3.58e-01 |
| Natural Gas Prod. | Aldehydes | secondary | 3.33e-04 | 2.36e-01 |
| Styrene-butadiene Copolymer Prod. | Hydrocarbons, remaining unspeciated | secondary | 2.88e-04 | 2.04e-01 |
| Natural Gas Prod. | Ethane | secondary | 1.94e-04 | 1.37e-01 |
| Natural Gas Prod. | Pentane | secondary | 1.67e-04 | 1.18e-01 |
| Natural Gas Prod. | Butane | secondary | 1.32e-04 | 9.30e-02 |
| Natural Gas Prod. | Hexane | secondary | 1.18e-04 | 8.34e-02 |
| Steel Prod., cold-rolled, semi-finished | Ethylene | secondary | 1.02e-04 | 7.18e-02 |
| PMMA Sheet Prod. | Methane | secondary | 8.05e-05 | 5.69e-02 |
| Polycarbonate Production | Methane | secondary | 7.94e-05 | 5.62e-02 |
| Steel Prod., cold-rolled, semi-finished | Ethane | secondary | 4.80e-05 | 3.39e-02 |
| Steel Prod., cold-rolled, semi-finished | Methane | secondary | 3.74e-05 | 2.64e-02 |
| Polycarbonate Production | Aromatic hydrocarbons | secondary | 3.49e-05 | 2.47e-02 |
| Styrene-butadiene Copolymer Prod. | Aromatic hydrocarbons | secondary | 2.26e-05 | 1.60e-02 |
| Styrene-butadiene Copolymer Prod. | Methane | secondary | 2.10e-05 | 1.49e-02 |
| Aluminum Prod. | Methane | secondary | 2.10e-05 | 1.48e-02 |
| Steel Prod., cold-rolled, semi-finished | n-Propane | secondary | 1.88e-05 | 1.33e-02 |
| PMMA Sheet Prod. | Aldehydes | secondary | 1.87e-05 | 1.32e-02 |
| Polycarbonate Production | Aldehydes | secondary | 1.46e-05 | 1.03e-02 |
| Steel Prod., cold-rolled, semi-finished | Propylene | secondary | 1.22e-05 | 8.62e-03 |
| Steel Prod., cold-rolled, semi-finished | Aldehydes | secondary | 9.25e-06 | 6.54e-03 |
| Natural Gas Prod. | Formaldehyde | secondary | 7.11e-06 | 5.03e-03 |
| PET Resin Production | Methane | secondary | 6.99e-06 | 4.94e-03 |
| Aluminum Prod. | Xylene (mixed isomers) | secondary | 5.24e-06 | 3.71e-03 |
| Aluminum Prod. | Polycyclic aromatic hydrocarbons | secondary | 5.13e-06 | 3.63e-03 |
| Steel Prod., cold-rolled, semi-finished | Butane | secondary | 4.43e-06 | 3.13e-03 |
| Natural Gas Prod. | o-xylene | secondary | 3.68e-06 | 2.60e-03 |
| Steel Prod., cold-rolled, semi-finished | Pentane | secondary | 3.39e-06 | 2.40e-03 |
| Steel Prod., cold-rolled, semi-finished | Benzene | secondary | 2.58e-06 | 1.82e-03 |
| Steel Prod., cold-rolled, semi-finished | Toluene | secondary | 2.14e-06 | 1.51e-03 |
| Steel Prod., cold-rolled, semi-finished | Xylene (mixed isomers) | secondary | 2.04e-06 | 1.44e-03 |
| Natural Gas Prod. | Toluene | secondary | 2.03e-06 | 1.44e-03 |
| Steel Prod., cold-rolled, semi-finished | Acetylene | secondary | 1.92e-06 | 1.36e-03 |
| Aluminum Prod. | Toluene | secondary | 1.74e-06 | 1.23e-03 |
| Aluminum Prod. | Aldehydes | secondary | 1.71e-06 | 1.21e-03 |
| Steel Prod., cold-rolled, semi-finished | Hexane | secondary | 9.03e-07 | 6.39e-04 |
| Steel Prod., cold-rolled, semi-finished | Formaldehyde | secondary | 7.47e-07 | 5.28e-04 |
| Steel Prod., cold-rolled, semi-finished | Phenol | secondary | 7.00e-07 | 4.95e-04 |
| PMMA Sheet Prod. | Aromatic hydrocarbons | secondary | 5.84e-07 | 4.13e-04 |
| Aluminum Prod. | Alcohols | secondary | 5.58e-07 | 3.94e-04 |

## Table M-18. LCD LCIA Results for the Photochemical Smog Impact Category

| Process Group | Material | LCI Data Type | Photo. Smog (kg ethene-equivalents) | % of Total |
|---|---|---|---|---|
| Aluminum Prod. | Benzene | secondary | 4.55e-07 | 3.21e-04 |
| Steel Prod., cold-rolled, semi-finished | Heptane | secondary | 4.32e-07 | 3.05e-04 |
| Natural Gas Prod. | Isophorone | secondary | 3.58e-07 | 2.53e-04 |
| Steel Prod., cold-rolled, semi-finished | Aromatic hydrocarbons | secondary | 2.47e-07 | 1.75e-04 |
| Steel Prod., cold-rolled, semi-finished | Methanol | secondary | 2.17e-07 | 1.53e-04 |
| Natural Gas Prod. | Acetaldehyde | secondary | 2.05e-07 | 1.45e-04 |
| Natural Gas Prod. | Propionaldehyde | secondary | 1.86e-07 | 1.31e-04 |
| Steel Prod., cold-rolled, semi-finished | Ethanol | secondary | 1.74e-07 | 1.23e-04 |
| Natural Gas Prod. | Methyl ethyl ketone | secondary | 1.50e-07 | 1.06e-04 |
| Steel Prod., cold-rolled, semi-finished | Acetaldehyde | secondary | 1.45e-07 | 1.03e-04 |
| Steel Prod., cold-rolled, semi-finished | Ethylbenzene | secondary | 1.15e-07 | 8.14e-05 |
| Natural Gas Prod. | Acrolein | secondary | 1.04e-07 | 7.36e-05 |
| Polycarbonate Production | Ethanethiol | secondary | 1.03e-07 | 7.26e-05 |
| Natural Gas Prod. | Naphthalene | secondary | 9.37e-08 | 6.62e-05 |
| Natural Gas Prod. | n-Propane | secondary | 9.36e-08 | 6.61e-05 |
| PMMA Sheet Prod. | Ethanethiol | secondary | 7.63e-08 | 5.40e-05 |
| Natural Gas Prod. | Ethylbenzene | secondary | 5.87e-08 | 4.15e-05 |
| Steel Prod., cold-rolled, semi-finished | Acetone | secondary | 5.80e-08 | 4.10e-05 |
| Natural Gas Prod. | Bromomethane | secondary | 5.16e-08 | 3.65e-05 |
| PET Resin Production | Aldehydes | secondary | 4.02e-08 | 2.84e-05 |
| Styrene-butadiene Copolymer Prod. | Aldehydes | secondary | 4.01e-08 | 2.83e-05 |
| Steel Prod., cold-rolled, semi-finished | Benzo[a]pyrene | secondary | 3.33e-08 | 2.35e-05 |
| Steel Prod., cold-rolled, semi-finished | Polycyclic aromatic hydrocarbons | secondary | 1.82e-08 | 1.29e-05 |
| Natural Gas Prod. | Styrene | secondary | 1.54e-08 | 1.09e-05 |
| Natural Gas Prod. | Benzyl chloride | secondary | 1.19e-08 | 8.43e-06 |
| Natural Gas Prod. | Methyl tert-butyl ether | secondary | 1.13e-08 | 7.98e-06 |
| Natural Gas Prod. | Phenol | secondary | 9.87e-09 | 6.98e-06 |
| Natural Gas Prod. | Acetophenone | secondary | 9.25e-09 | 6.54e-06 |
| Natural Gas Prod. | Methyl chloride | secondary | 9.02e-09 | 6.38e-06 |
| Steel Prod., cold-rolled, semi-finished | Naphthalene | secondary | 5.55e-09 | 3.92e-06 |
| Natural Gas Prod. | Dichloromethane | secondary | 4.94e-09 | 3.49e-06 |
| Natural Gas Prod. | 1,4-Dichlorobenzene | secondary | 3.97e-09 | 2.80e-06 |
| Natural Gas Prod. | Phenanthrene | secondary | 3.75e-09 | 2.65e-06 |
| Natural Gas Prod. | Cumene | secondary | 3.27e-09 | 2.31e-06 |
| Natural Gas Prod. | 2-Methylnaphthalene | secondary | 2.88e-09 | 2.03e-06 |
| Aluminum Prod. | 1,2-Dichlorotetrafluoroethane | secondary | 1.87e-09 | 1.32e-06 |
| Natural Gas Prod. | Vinyl acetate | secondary | 1.37e-09 | 9.71e-07 |
| Aluminum Prod. | Phenol | secondary | 1.13e-09 | 8.00e-07 |
| Natural Gas Prod. | Biphenyl | secondary | 1.05e-09 | 7.41e-07 |
| Natural Gas Prod. | Chloroform | secondary | 1.00e-09 | 7.10e-07 |
| Natural Gas Prod. | Fluorene | secondary | 9.15e-10 | 6.47e-07 |
| Natural Gas Prod. | Pyrene | secondary | 8.20e-10 | 5.80e-07 |
| Natural Gas Prod. | Fluoranthene | secondary | 8.17e-10 | 5.78e-07 |
| Natural Gas Prod. | Tetrachloroethylene | secondary | 7.32e-10 | 5.18e-07 |
| Natural Gas Prod. | Ethyl Chloride | secondary | 7.15e-10 | 5.06e-07 |
| Natural Gas Prod. | Acenaphthene | secondary | 7.04e-10 | 4.98e-07 |
| Natural Gas Prod. | 1,2-Dichloroethane | secondary | 6.81e-10 | 4.81e-07 |
| Natural Gas Prod. | Anthracene | secondary | 4.27e-10 | 3.02e-07 |

## Table M-18. LCD LCIA Results for the Photochemical Smog Impact Category

| Process Group | Material | LCI Data Type | Photo. Smog (kg ethene-equivalents) | % of Total |
|---|---|---|---|---|
| Natural Gas Prod. | Ethylene dibromide | secondary | 3.87e-10 | 2.74e-07 |
| Natural Gas Prod. | Chlorobenzene | secondary | 3.75e-10 | 2.65e-07 |
| Natural Gas Prod. | Acenaphthylene | secondary | 3.72e-10 | 2.63e-07 |
| Natural Gas Prod. | 1,1,1-Trichloroethane | secondary | 3.40e-10 | 2.41e-07 |
| Natural Gas Prod. | Benzo[a]anthracene | secondary | 2.98e-10 | 2.11e-07 |
| Natural Gas Prod. | Chrysene | secondary | 2.87e-10 | 2.03e-07 |
| Natural Gas Prod. | Indeno(1,2,3-cd)pyrene | secondary | 2.62e-10 | 1.85e-07 |
| Natural Gas Prod. | 2,4-Dinitrotoluene | secondary | 1.73e-10 | 1.22e-07 |
| Natural Gas Prod. | Benzo[g,h,i]perylene | secondary | 1.70e-10 | 1.20e-07 |
| Natural Gas Prod. | Benzo[a]pyrene | secondary | 1.67e-10 | 1.18e-07 |
| Natural Gas Prod. | 2-Chloroacetophenone | secondary | 1.19e-10 | 8.43e-08 |
| Natural Gas Prod. | Benzo[b,j,k]fluoranthene | secondary | 6.79e-11 | 4.80e-08 |
| Natural Gas Prod. | Aromatic hydrocarbons | secondary | 5.64e-11 | 3.99e-08 |
| Natural Gas Prod. | 5-Methyl chrysene | secondary | 1.36e-11 | 9.60e-09 |
| Natural Gas Prod. | Polycyclic aromatic hydrocarbons | secondary | 6.28e-14 | 4.44e-11 |
| Steel Prod., cold-rolled, semi-finished | Propionaldehyde | secondary | 4.58e-14 | 3.23e-11 |
| Steel Prod., cold-rolled, semi-finished | Benzaldehyde | secondary | 1.23e-14 | 8.71e-12 |
| **Total Materials Processing** | | | **1.29e-01** | **9.12e+01** |
| **Manufacturing Life-cycle Stage** | | | | |
| Monitor/module | Isopropyl alcohol | primary | 3.48e-03 | 2.46e+00 |
| LPG Production | Hydrocarbons, remaining unspeciated | secondary | 2.99e-03 | 2.11e+00 |
| LPG Production | Nonmethane hydrocarbons, remaining unspeciated | secondary | 2.04e-03 | 1.44e+00 |
| Natural Gas Prod. | Nonmethane hydrocarbons, remaining unspeciated | secondary | 1.42e-03 | 1.00e+00 |
| Natural Gas Prod. | Methane | secondary | 5.54e-04 | 3.91e-01 |
| Natural Gas Prod. | Benzene | secondary | 3.77e-04 | 2.67e-01 |
| LPG Production | Methane | secondary | 2.82e-04 | 1.99e-01 |
| LPG Production | Benzene | secondary | 1.30e-04 | 9.20e-02 |
| Natural Gas Prod. | Hydrocarbons, remaining unspeciated | secondary | 3.91e-05 | 2.76e-02 |
| Backlight | Diethyl ether | primary | 3.69e-05 | 2.61e-02 |
| Fuel Oil #4 Prod. | Hydrocarbons, remaining unspeciated | secondary | 3.32e-05 | 2.35e-02 |
| Monitor/module | Acetone | primary | 3.31e-05 | 2.34e-02 |
| LPG Production | Aldehydes | secondary | 3.17e-05 | 2.24e-02 |
| Panel components | Heptane | primary | 3.09e-05 | 2.19e-02 |
| Panel components | Nonmethane hydrocarbons, remaining unspeciated | primary | 3.09e-05 | 2.19e-02 |
| Panel components | Toluene | primary | 3.06e-05 | 2.17e-02 |
| LPG Production | Formaldehyde | secondary | 2.36e-05 | 1.67e-02 |
| Fuel Oil #4 Prod. | Nonmethane hydrocarbons, remaining unspeciated | secondary | 2.23e-05 | 1.58e-02 |
| Monitor/module | Cyclohexane | primary | 1.93e-05 | 1.36e-02 |
| Fuel Oil #6 Prod. | Hydrocarbons, remaining unspeciated | secondary | 1.83e-05 | 1.29e-02 |
| LPG Production | Ethane | secondary | 1.48e-05 | 1.05e-02 |
| Japanese Electric Grid | Formaldehyde | model/secondary | 1.44e-05 | 1.02e-02 |
| LPG Production | Pentane | secondary | 1.27e-05 | 9.00e-03 |
| Backlight | Ethanol | primary | 1.24e-05 | 8.76e-03 |
| Fuel Oil #6 Prod. | Nonmethane hydrocarbons, remaining unspeciated | secondary | 1.21e-05 | 8.55e-03 |
| LPG Production | Butane | secondary | 1.00e-05 | 7.09e-03 |
| Fuel Oil #2 Prod. | Hydrocarbons, remaining unspeciated | secondary | 9.21e-06 | 6.51e-03 |
| LPG Production | Hexane | secondary | 9.00e-06 | 6.36e-03 |
| US electric grid | Methane | model/secondary | 8.74e-06 | 6.18e-03 |
| Natural Gas Prod. | Aldehydes | secondary | 7.53e-06 | 5.32e-03 |

## Table M-18. LCD LCIA Results for the Photochemical Smog Impact Category

| Process Group | Material | LCI Data Type | Photo. Smog (kg ethene-equivalents) | % of Total |
|---|---|---|---|---|
| PWB Mfg. | Formaldehyde | model/secondary | 7.21e-06 | 5.09e-03 |
| Fuel Oil #2 Prod. | Nonmethane hydrocarbons, remaining unspeciated | secondary | 6.26e-06 | 4.42e-03 |
| Natural Gas Prod. | Ethane | secondary | 4.38e-06 | 3.10e-03 |
| Natural Gas Prod. | Pentane | secondary | 3.77e-06 | 2.66e-03 |
| Natural Gas Prod. | Butane | secondary | 2.97e-06 | 2.10e-03 |
| Panel components | HCFC-225ca | primary | 2.94e-06 | 2.08e-03 |
| Panel components | HCFC-225cb | primary | 2.94e-06 | 2.08e-03 |
| Fuel Oil #4 Prod. | Methane | secondary | 2.81e-06 | 1.99e-03 |
| Japanese Electric Grid | Toluene | model/secondary | 2.71e-06 | 1.91e-03 |
| Natural Gas Prod. | Hexane | secondary | 2.66e-06 | 1.88e-03 |
| Japanese Electric Grid | Methane | model/secondary | 1.91e-06 | 1.35e-03 |
| Japanese Electric Grid | Isophorone | model/secondary | 1.70e-06 | 1.20e-03 |
| Fuel Oil #6 Prod. | Methane | secondary | 1.40e-06 | 9.92e-04 |
| Fuel Oil #4 Prod. | Benzene | secondary | 1.17e-06 | 8.30e-04 |
| Japanese Electric Grid | Acetaldehyde | model/secondary | 9.71e-07 | 6.86e-04 |
| Japanese Electric Grid | Benzene | model/secondary | 9.69e-07 | 6.85e-04 |
| Japanese Electric Grid | Propionaldehyde | model/secondary | 8.81e-07 | 6.23e-04 |
| Fuel Oil #2 Prod. | Methane | secondary | 8.39e-07 | 5.93e-04 |
| Japanese Electric Grid | Methyl ethyl ketone | model/secondary | 7.09e-07 | 5.01e-04 |
| Japanese Electric Grid | Naphthalene | model/secondary | 5.66e-07 | 4.00e-04 |
| Fuel Oil #6 Prod. | Benzene | secondary | 5.27e-07 | 3.73e-04 |
| Japanese Electric Grid | Acrolein | model/secondary | 4.94e-07 | 3.49e-04 |
| Fuel Oil #2 Prod. | Benzene | secondary | 3.76e-07 | 2.66e-04 |
| Panel components | Methyl ethyl ketone | primary | 3.46e-07 | 2.45e-04 |
| Japanese Electric Grid | Ethylbenzene | model/secondary | 3.04e-07 | 2.15e-04 |
| Fuel Oil #4 Prod. | Formaldehyde | secondary | 2.91e-07 | 2.06e-04 |
| Fuel Oil #4 Prod. | Aldehydes | secondary | 2.86e-07 | 2.02e-04 |
| Japanese Electric Grid | Bromomethane | model/secondary | 2.45e-07 | 1.73e-04 |
| Fuel Oil #6 Prod. | Formaldehyde | secondary | 1.71e-07 | 1.21e-04 |
| Natural Gas Prod. | Formaldehyde | secondary | 1.61e-07 | 1.13e-04 |
| LPG Production | Isophorone | secondary | 1.42e-07 | 1.00e-04 |
| Fuel Oil #4 Prod. | Ethane | secondary | 1.34e-07 | 9.45e-05 |
| Fuel Oil #6 Prod. | Aldehydes | secondary | 1.28e-07 | 9.07e-05 |
| Fuel Oil #4 Prod. | Pentane | secondary | 1.15e-07 | 8.13e-05 |
| Japanese Electric Grid | Xylene (mixed isomers) | model/secondary | 1.08e-07 | 7.65e-05 |
| Japanese Electric Grid | Hexane | model/secondary | 1.07e-07 | 7.57e-05 |
| LPG Production | Toluene | secondary | 1.00e-07 | 7.10e-05 |
| Fuel Oil #2 Prod. | Aldehydes | secondary | 9.17e-08 | 6.48e-05 |
| Fuel Oil #4 Prod. | Butane | secondary | 9.06e-08 | 6.40e-05 |
| Natural Gas Prod. | o-xylene | secondary | 8.30e-08 | 5.87e-05 |
| Fuel Oil #4 Prod. | Hexane | secondary | 8.12e-08 | 5.74e-05 |
| LPG Production | Acetaldehyde | secondary | 8.11e-08 | 5.73e-05 |
| US electric grid | Isophorone | model/secondary | 7.66e-08 | 5.42e-05 |
| Fuel Oil #2 Prod. | Formaldehyde | secondary | 7.56e-08 | 5.35e-05 |
| LPG Production | Propionaldehyde | secondary | 7.36e-08 | 5.20e-05 |
| Japanese Electric Grid | Styrene | model/secondary | 7.31e-08 | 5.17e-05 |
| US electric grid | Formaldehyde | model/secondary | 6.90e-08 | 4.88e-05 |
| Fuel Oil #6 Prod. | Ethane | secondary | 6.01e-08 | 4.25e-05 |
| LPG Production | Methyl ethyl ketone | secondary | 5.92e-08 | 4.19e-05 |

## Table M-18. LCD LCIA Results for the Photochemical Smog Impact Category

| Process Group | Material | LCI Data Type | Photo. Smog (kg ethene-equivalents) | % of Total |
|---|---|---|---|---|
| Japanese Electric Grid | Benzyl chloride | model/secondary | 5.65e-08 | 4.00e-05 |
| Japanese Electric Grid | Methyl tert-butyl ether | model/secondary | 5.34e-08 | 3.77e-05 |
| Fuel Oil #6 Prod. | Pentane | secondary | 5.17e-08 | 3.65e-05 |
| Japanese Electric Grid | o-xylene | model/secondary | 4.94e-08 | 3.49e-05 |
| Japanese Electric Grid | Phenol | model/secondary | 4.68e-08 | 3.31e-05 |
| Natural Gas Prod. | Toluene | secondary | 4.58e-08 | 3.24e-05 |
| Japanese Electric Grid | Acetophenone | model/secondary | 4.39e-08 | 3.10e-05 |
| US electric grid | Acetaldehyde | model/secondary | 4.38e-08 | 3.10e-05 |
| Fuel Oil #2 Prod. | Ethane | secondary | 4.28e-08 | 3.03e-05 |
| Japanese Electric Grid | Methyl chloride | model/secondary | 4.28e-08 | 3.03e-05 |
| US electric grid | Benzene | model/secondary | 4.27e-08 | 3.02e-05 |
| LPG Production | Acrolein | secondary | 4.12e-08 | 2.92e-05 |
| Fuel Oil #6 Prod. | Butane | secondary | 4.07e-08 | 2.88e-05 |
| US electric grid | Propionaldehyde | model/secondary | 3.98e-08 | 2.81e-05 |
| LPG Production | o-xylene | secondary | 3.77e-08 | 2.66e-05 |
| Fuel Oil #2 Prod. | Pentane | secondary | 3.68e-08 | 2.60e-05 |
| Fuel Oil #6 Prod. | Hexane | secondary | 3.65e-08 | 2.58e-05 |
| LPG Production | n-Propane | secondary | 3.36e-08 | 2.38e-05 |
| US electric grid | Methyl ethyl ketone | model/secondary | 3.20e-08 | 2.26e-05 |
| Fuel Oil #2 Prod. | Butane | secondary | 2.90e-08 | 2.05e-05 |
| US electric grid | Toluene | model/secondary | 2.77e-08 | 1.96e-05 |
| Fuel Oil #2 Prod. | Hexane | secondary | 2.60e-08 | 1.84e-05 |
| Japanese Electric Grid | Dichloromethane | model/secondary | 2.34e-08 | 1.66e-05 |
| LPG Production | Ethylbenzene | secondary | 2.32e-08 | 1.64e-05 |
| US electric grid | Acrolein | model/secondary | 2.23e-08 | 1.58e-05 |
| LPG Production | Bromomethane | secondary | 2.04e-08 | 1.45e-05 |
| Japanese Electric Grid | Cumene hydroperoxide | model/secondary | 1.55e-08 | 1.10e-05 |
| Japanese Electric Grid | Phenanthrene | model/secondary | 1.33e-08 | 9.42e-06 |
| LPG Production | Naphthalene | secondary | 1.27e-08 | 9.01e-06 |
| US electric grid | Ethylbenzene | model/secondary | 1.25e-08 | 8.82e-06 |
| US electric grid | Bromomethane | model/secondary | 1.11e-08 | 7.82e-06 |
| Japanese Electric Grid | Acenaphthene | model/secondary | 1.11e-08 | 7.81e-06 |
| Natural Gas Prod. | Isophorone | secondary | 8.08e-09 | 5.71e-06 |
| Japanese Electric Grid | Vinyl acetate | model/secondary | 6.50e-09 | 4.60e-06 |
| LPG Production | Styrene | secondary | 6.11e-09 | 4.32e-06 |
| Japanese Electric Grid | Biphenyl | model/secondary | 4.97e-09 | 3.52e-06 |
| US electric grid | Xylene (mixed isomers) | model/secondary | 4.89e-09 | 3.46e-06 |
| US electric grid | Hexane | model/secondary | 4.84e-09 | 3.42e-06 |
| Japanese Electric Grid | Chloroform | model/secondary | 4.76e-09 | 3.37e-06 |
| LPG Production | Benzyl chloride | secondary | 4.72e-09 | 3.34e-06 |
| Japanese Electric Grid | Fluorene | model/secondary | 4.68e-09 | 3.31e-06 |
| Natural Gas Prod. | Acetaldehyde | secondary | 4.62e-09 | 3.27e-06 |
| Japanese Electric Grid | 1,1,1-Trichloroethane | model/secondary | 4.57e-09 | 3.23e-06 |
| LPG Production | Methyl tert-butyl ether | secondary | 4.47e-09 | 3.16e-06 |
| Japanese Electric Grid | Fluoranthene | model/secondary | 4.47e-09 | 3.16e-06 |
| Natural Gas Prod. | Propionaldehyde | secondary | 4.19e-09 | 2.96e-06 |
| LPG Production | Phenol | secondary | 3.91e-09 | 2.76e-06 |
| LPG Production | Acetophenone | secondary | 3.66e-09 | 2.59e-06 |
| LPG Production | Methyl chloride | secondary | 3.57e-09 | 2.53e-06 |
| Japanese Electric Grid | Tetrachloroethylene | model/secondary | 3.47e-09 | 2.45e-06 |

## Table M-18. LCD LCIA Results for the Photochemical Smog Impact Category

| Process Group | Material | LCI Data Type | Photo. Smog (kg ethene-equivalents) | % of Total |
|---|---|---|---|---|
| Japanese Electric Grid | Ethyl Chloride | model/secondary | 3.39e-09 | 2.40e-06 |
| Natural Gas Prod. | Methyl ethyl ketone | secondary | 3.38e-09 | 2.39e-06 |
| US electric grid | Styrene | model/secondary | 3.30e-09 | 2.34e-06 |
| Japanese Electric Grid | 1,2-Dichloroethane | model/secondary | 3.23e-09 | 2.28e-06 |
| Japanese Electric Grid | Pyrene | model/secondary | 3.23e-09 | 2.28e-06 |
| US electric grid | Naphthalene | model/secondary | 2.69e-09 | 1.90e-06 |
| US electric grid | Benzyl chloride | model/secondary | 2.55e-09 | 1.80e-06 |
| US electric grid | Methyl tert-butyl ether | model/secondary | 2.42e-09 | 1.71e-06 |
| Natural Gas Prod. | Acrolein | secondary | 2.35e-09 | 1.66e-06 |
| US electric grid | Phenol | model/secondary | 2.11e-09 | 1.49e-06 |
| Natural Gas Prod. | Naphthalene | secondary | 2.11e-09 | 1.49e-06 |
| Natural Gas Prod. | n-Propane | secondary | 2.11e-09 | 1.49e-06 |
| Japanese Electric Grid | Benzo[a]anthracene | model/secondary | 2.05e-09 | 1.45e-06 |
| US electric grid | Acetophenone | model/secondary | 1.98e-09 | 1.40e-06 |
| LPG Production | Dichloromethane | secondary | 1.96e-09 | 1.38e-06 |
| US electric grid | Methyl chloride | model/secondary | 1.93e-09 | 1.37e-06 |
| LPG Production | Aromatic hydrocarbons | secondary | 1.92e-09 | 1.36e-06 |
| Japanese Electric Grid | Ethylene dibromide | model/secondary | 1.84e-09 | 1.30e-06 |
| Japanese Electric Grid | Chlorobenzene | model/secondary | 1.78e-09 | 1.26e-06 |
| Fuel Oil #4 Prod. | Isophorone | secondary | 1.52e-09 | 1.08e-06 |
| Japanese Electric Grid | Chrysene | model/secondary | 1.37e-09 | 9.68e-07 |
| Natural Gas Prod. | Ethylbenzene | secondary | 1.32e-09 | 9.37e-07 |
| LPG Production | Cumene | secondary | 1.29e-09 | 9.15e-07 |
| Japanese Electric Grid | Anthracene | model/secondary | 1.17e-09 | 8.24e-07 |
| Natural Gas Prod. | Bromomethane | secondary | 1.17e-09 | 8.24e-07 |
| Japanese Electric Grid | Indeno(1,2,3-cd)pyrene | model/secondary | 1.15e-09 | 8.10e-07 |
| Japanese Electric Grid | Benzo[g,h,i]perylene | model/secondary | 1.10e-09 | 7.78e-07 |
| US electric grid | Dichloromethane | model/secondary | 1.06e-09 | 7.48e-07 |
| Japanese Electric Grid | Benzo[b,j,k]fluoranthene | model/secondary | 9.94e-10 | 7.03e-07 |
| Fuel Oil #4 Prod. | Toluene | secondary | 9.81e-10 | 6.94e-07 |
| Fuel Oil #4 Prod. | Acetaldehyde | secondary | 8.71e-10 | 6.16e-07 |
| Japanese Electric Grid | Acenaphthylene | model/secondary | 8.43e-10 | 5.96e-07 |
| LPG Production | Phenanthrene | secondary | 8.28e-10 | 5.85e-07 |
| Japanese Electric Grid | 2,4-Dinitrotoluene | model/secondary | 8.17e-10 | 5.77e-07 |
| Fuel Oil #6 Prod. | Isophorone | secondary | 8.11e-10 | 5.74e-07 |
| Fuel Oil #4 Prod. | Propionaldehyde | secondary | 7.90e-10 | 5.59e-07 |
| US electric grid | Cumene | model/secondary | 7.00e-10 | 4.95e-07 |
| Fuel Oil #4 Prod. | Methyl ethyl ketone | secondary | 6.36e-10 | 4.50e-07 |
| Japanese Electric Grid | 2-Methylnaphthalene | model/secondary | 6.09e-10 | 4.30e-07 |
| Japanese Electric Grid | 2-Chloroacetophenone | model/secondary | 5.65e-10 | 4.00e-07 |
| LPG Production | Vinyl acetate | secondary | 5.44e-10 | 3.85e-07 |
| Fuel Oil #6 Prod. | Toluene | secondary | 4.80e-10 | 3.39e-07 |
| Fuel Oil #6 Prod. | Acetaldehyde | secondary | 4.64e-10 | 3.28e-07 |
| Fuel Oil #4 Prod. | Acrolein | secondary | 4.43e-10 | 3.13e-07 |
| Fuel Oil #2 Prod. | Isophorone | secondary | 4.32e-10 | 3.06e-07 |
| Fuel Oil #6 Prod. | Propionaldehyde | secondary | 4.21e-10 | 2.98e-07 |
| LPG Production | Biphenyl | secondary | 4.15e-10 | 2.94e-07 |
| LPG Production | Chloroform | secondary | 3.98e-10 | 2.81e-07 |

## Table M-18. LCD LCIA Results for the Photochemical Smog Impact Category

| Process Group | Material | LCI Data Type | Photo. Smog (kg ethene-equivalents) | % of Total |
|---|---|---|---|---|
| US electric grid | Phenanthrene | model/secondary | 3.69e-10 | 2.61e-07 |
| Fuel Oil #4 Prod. | n-Propane | secondary | 3.60e-10 | 2.55e-07 |
| Fuel Oil #4 Prod. | o-xylene | secondary | 3.55e-10 | 2.51e-07 |
| Natural Gas Prod. | Styrene | secondary | 3.48e-10 | 2.46e-07 |
| Fuel Oil #6 Prod. | Methyl ethyl ketone | secondary | 3.39e-10 | 2.40e-07 |
| LPG Production | 1,4-Dichlorobenzene | secondary | 3.03e-10 | 2.14e-07 |
| Fuel Oil #2 Prod. | Toluene | secondary | 2.97e-10 | 2.10e-07 |
| US electric grid | Vinyl acetate | model/secondary | 2.94e-10 | 2.08e-07 |
| LPG Production | Tetrachloroethylene | secondary | 2.90e-10 | 2.05e-07 |
| LPG Production | Ethyl Chloride | secondary | 2.83e-10 | 2.00e-07 |
| LPG Production | 1,2-Dichloroethane | secondary | 2.70e-10 | 1.91e-07 |
| Natural Gas Prod. | Benzyl chloride | secondary | 2.69e-10 | 1.90e-07 |
| Natural Gas Prod. | Methyl tert-butyl ether | secondary | 2.55e-10 | 1.80e-07 |
| LPG Production | Fluorene | secondary | 2.53e-10 | 1.79e-07 |
| Fuel Oil #4 Prod. | Ethylbenzene | secondary | 2.49e-10 | 1.76e-07 |
| Fuel Oil #2 Prod. | Acetaldehyde | secondary | 2.47e-10 | 1.75e-07 |
| Fuel Oil #6 Prod. | Acrolein | secondary | 2.36e-10 | 1.67e-07 |
| US electric grid | Biphenyl | model/secondary | 2.25e-10 | 1.59e-07 |
| Fuel Oil #2 Prod. | Propionaldehyde | secondary | 2.24e-10 | 1.59e-07 |
| Natural Gas Prod. | Phenol | secondary | 2.23e-10 | 1.58e-07 |
| Fuel Oil #4 Prod. | Bromomethane | secondary | 2.20e-10 | 1.55e-07 |
| LPG Production | 2-Methylnaphthalene | secondary | 2.19e-10 | 1.55e-07 |
| US electric grid | Chloroform | model/secondary | 2.15e-10 | 1.52e-07 |
| Natural Gas Prod. | Acetophenone | secondary | 2.09e-10 | 1.48e-07 |
| LPG Production | Fluoranthene | secondary | 2.07e-10 | 1.46e-07 |
| Natural Gas Prod. | Methyl chloride | secondary | 2.04e-10 | 1.44e-07 |
| LPG Production | Acenaphthene | secondary | 1.92e-10 | 1.35e-07 |
| Fuel Oil #6 Prod. | n-Propane | secondary | 1.91e-10 | 1.35e-07 |
| Fuel Oil #2 Prod. | Methyl ethyl ketone | secondary | 1.81e-10 | 1.28e-07 |
| Fuel Oil #6 Prod. | o-xylene | secondary | 1.67e-10 | 1.18e-07 |
| US electric grid | Tetrachloroethylene | model/secondary | 1.57e-10 | 1.11e-07 |
| LPG Production | Ethylene dibromide | secondary | 1.53e-10 | 1.08e-07 |
| US electric grid | Ethyl Chloride | model/secondary | 1.53e-10 | 1.08e-07 |
| LPG Production | Chlorobenzene | secondary | 1.48e-10 | 1.05e-07 |
| US electric grid | 1,2-Dichloroethane | model/secondary | 1.46e-10 | 1.03e-07 |
| LPG Production | 1,1,1-Trichloroethane | secondary | 1.35e-10 | 9.53e-08 |
| Fuel Oil #6 Prod. | Ethylbenzene | secondary | 1.32e-10 | 9.35e-08 |
| LPG Production | Pyrene | secondary | 1.31e-10 | 9.29e-08 |
| Fuel Oil #2 Prod. | Acrolein | secondary | 1.26e-10 | 8.90e-08 |
| US electric grid | Fluorene | model/secondary | 1.24e-10 | 8.75e-08 |
| Fuel Oil #4 Prod. | Naphthalene | secondary | 1.18e-10 | 8.36e-08 |
| Fuel Oil #6 Prod. | Bromomethane | secondary | 1.17e-10 | 8.28e-08 |
| Natural Gas Prod. | Dichloromethane | secondary | 1.11e-10 | 7.88e-08 |
| Japanese Electric Grid | Benzo[a]pyrene | model/secondary | 1.11e-10 | 7.87e-08 |
| Fuel Oil #2 Prod. | o-xylene | secondary | 1.10e-10 | 7.80e-08 |
| Fuel Oil #2 Prod. | n-Propane | secondary | 1.03e-10 | 7.25e-08 |
| US electric grid | Fluoranthene | model/secondary | 9.89e-11 | 6.99e-08 |
| Natural Gas Prod. | 1,4-Dichlorobenzene | secondary | 8.95e-11 | 6.33e-08 |
| Natural Gas Prod. | Phenanthrene | secondary | 8.45e-11 | 5.98e-08 |
| US electric grid | o-xylene | model/secondary | 8.41e-11 | 5.94e-08 |

## Table M-18. LCD LCIA Results for the Photochemical Smog Impact Category

| Process Group | Material | LCI Data Type | Photo. Smog (kg ethene-equivalents) | % of Total |
|---|---|---|---|---|
| US electric grid | Acenaphthene | model/secondary | 8.37e-11 | 5.92e-08 |
| US electric grid | Ethylene dibromide | model/secondary | 8.29e-11 | 5.86e-08 |
| US electric grid | Chlorobenzene | model/secondary | 8.02e-11 | 5.67e-08 |
| LPG Production | Acenaphthylene | secondary | 7.81e-11 | 5.52e-08 |
| US electric grid | 1,1,1-Trichloroethane | model/secondary | 7.80e-11 | 5.51e-08 |
| LPG Production | Anthracene | secondary | 7.62e-11 | 5.38e-08 |
| Natural Gas Prod. | Cumene | secondary | 7.38e-11 | 5.22e-08 |
| Fuel Oil #2 Prod. | Ethylbenzene | secondary | 7.07e-11 | 5.00e-08 |
| LPG Production | 2,4-Dinitrotoluene | secondary | 6.84e-11 | 4.84e-08 |
| Fuel Oil #4 Prod. | Styrene | secondary | 6.56e-11 | 4.64e-08 |
| Natural Gas Prod. | 2-Methylnaphthalene | secondary | 6.49e-11 | 4.59e-08 |
| Japanese Electric Grid | 5-Methyl chrysene | model/secondary | 6.43e-11 | 4.55e-08 |
| Fuel Oil #2 Prod. | Bromomethane | secondary | 6.24e-11 | 4.41e-08 |
| Fuel Oil #6 Prod. | Naphthalene | secondary | 5.48e-11 | 3.87e-08 |
| Fuel Oil #4 Prod. | Benzyl chloride | secondary | 5.07e-11 | 3.58e-08 |
| US electric grid | Pyrene | model/secondary | 4.91e-11 | 3.47e-08 |
| Fuel Oil #4 Prod. | Methyl tert-butyl ether | secondary | 4.80e-11 | 3.40e-08 |
| LPG Production | 2-Chloroacetophenone | secondary | 4.72e-11 | 3.34e-08 |
| LPG Production | Benzo[a]anthracene | secondary | 4.56e-11 | 3.22e-08 |
| LPG Production | Chrysene | secondary | 4.37e-11 | 3.09e-08 |
| Fuel Oil #4 Prod. | Phenol | secondary | 4.20e-11 | 2.97e-08 |
| Fuel Oil #4 Prod. | Acetophenone | secondary | 3.94e-11 | 2.78e-08 |
| Fuel Oil #4 Prod. | Methyl chloride | secondary | 3.84e-11 | 2.71e-08 |
| Fuel Oil #2 Prod. | Naphthalene | secondary | 3.71e-11 | 2.62e-08 |
| US electric grid | 2,4-Dinitrotoluene | model/secondary | 3.70e-11 | 2.62e-08 |
| Fuel Oil #6 Prod. | Styrene | secondary | 3.50e-11 | 2.47e-08 |
| LPG Production | Indeno(1,2,3-cd)pyrene | secondary | 3.39e-11 | 2.40e-08 |
| US electric grid | Acenaphthylene | model/secondary | 3.32e-11 | 2.35e-08 |
| Natural Gas Prod. | Vinyl acetate | secondary | 3.10e-11 | 2.19e-08 |
| US electric grid | Anthracene | model/secondary | 2.87e-11 | 2.03e-08 |
| Fuel Oil #6 Prod. | Benzyl chloride | secondary | 2.70e-11 | 1.91e-08 |
| LPG Production | Benzo[b,j,k]fluoranthene | secondary | 2.69e-11 | 1.90e-08 |
| Fuel Oil #6 Prod. | Methyl tert-butyl ether | secondary | 2.56e-11 | 1.81e-08 |
| US electric grid | 2-Chloroacetophenone | model/secondary | 2.55e-11 | 1.80e-08 |
| LPG Production | Benzo[a]pyrene | secondary | 2.50e-11 | 1.76e-08 |
| Natural Gas Prod. | Biphenyl | secondary | 2.37e-11 | 1.67e-08 |
| Natural Gas Prod. | Chloroform | secondary | 2.27e-11 | 1.60e-08 |
| Fuel Oil #6 Prod. | Phenol | secondary | 2.24e-11 | 1.58e-08 |
| Fuel Oil #4 Prod. | Dichloromethane | secondary | 2.10e-11 | 1.48e-08 |
| Fuel Oil #6 Prod. | Acetophenone | secondary | 2.10e-11 | 1.48e-08 |
| Natural Gas Prod. | Fluorene | secondary | 2.07e-11 | 1.46e-08 |
| Fuel Oil #6 Prod. | Methyl chloride | secondary | 2.05e-11 | 1.45e-08 |
| LPG Production | Benzo[g,h,i]perylene | secondary | 2.03e-11 | 1.43e-08 |
| Fuel Oil #2 Prod. | Styrene | secondary | 1.86e-11 | 1.32e-08 |
| Natural Gas Prod. | Pyrene | secondary | 1.85e-11 | 1.31e-08 |
| Natural Gas Prod. | Fluoranthene | secondary | 1.84e-11 | 1.30e-08 |
| Natural Gas Prod. | Tetrachloroethylene | secondary | 1.65e-11 | 1.17e-08 |
| Natural Gas Prod. | Ethyl Chloride | secondary | 1.61e-11 | 1.14e-08 |

## Table M-18. LCD LCIA Results for the Photochemical Smog Impact Category

| Process Group | Material | LCI Data Type | Photo. Smog (kg ethene-equivalents) | % of Total |
|---|---|---|---|---|
| Natural Gas Prod. | Acenaphthene | secondary | 1.59e-11 | 1.12e-08 |
| US electric grid | Benzo[b,j,k]fluoranthene | model/secondary | 1.57e-11 | 1.11e-08 |
| Natural Gas Prod. | 1,2-Dichloroethane | secondary | 1.54e-11 | 1.09e-08 |
| US electric grid | Chrysene | model/secondary | 1.51e-11 | 1.06e-08 |
| Fuel Oil #2 Prod. | Benzyl chloride | secondary | 1.44e-11 | 1.02e-08 |
| Fuel Oil #4 Prod. | Aromatic hydrocarbons | secondary | 1.40e-11 | 9.93e-09 |
| Fuel Oil #4 Prod. | Cumene | secondary | 1.39e-11 | 9.83e-09 |
| US electric grid | Benzo[a]anthracene | model/secondary | 1.37e-11 | 9.66e-09 |
| Fuel Oil #2 Prod. | Methyl tert-butyl ether | secondary | 1.36e-11 | 9.65e-09 |
| Fuel Oil #2 Prod. | Phenol | secondary | 1.19e-11 | 8.43e-09 |
| Fuel Oil #6 Prod. | Dichloromethane | secondary | 1.12e-11 | 7.91e-09 |
| Fuel Oil #2 Prod. | Acetophenone | secondary | 1.12e-11 | 7.91e-09 |
| Fuel Oil #2 Prod. | Methyl chloride | secondary | 1.09e-11 | 7.71e-09 |
| US electric grid | Indeno(1,2,3-cd)pyrene | model/secondary | 9.71e-12 | 6.87e-09 |
| Natural Gas Prod. | Anthracene | secondary | 9.64e-12 | 6.81e-09 |
| Natural Gas Prod. | Ethylene dibromide | secondary | 8.74e-12 | 6.18e-09 |
| Fuel Oil #4 Prod. | Phenanthrene | secondary | 8.58e-12 | 6.07e-09 |
| Natural Gas Prod. | Chlorobenzene | secondary | 8.45e-12 | 5.98e-09 |
| Natural Gas Prod. | Acenaphthylene | secondary | 8.39e-12 | 5.93e-09 |
| Natural Gas Prod. | 1,1,1-Trichloroethane | secondary | 7.68e-12 | 5.43e-09 |
| Fuel Oil #6 Prod. | Cumene | secondary | 7.41e-12 | 5.24e-09 |
| Natural Gas Prod. | Benzo[a]anthracene | secondary | 6.72e-12 | 4.75e-09 |
| Natural Gas Prod. | Chrysene | secondary | 6.48e-12 | 4.58e-09 |
| Fuel Oil #2 Prod. | Dichloromethane | secondary | 5.97e-12 | 4.22e-09 |
| Natural Gas Prod. | Indeno(1,2,3-cd)pyrene | secondary | 5.91e-12 | 4.18e-09 |
| Fuel Oil #4 Prod. | Vinyl acetate | secondary | 5.85e-12 | 4.13e-09 |
| LPG Production | 5-Methyl chrysene | secondary | 5.38e-12 | 3.80e-09 |
| US electric grid | Benzo[g,h,i]perylene | model/secondary | 5.31e-12 | 3.75e-09 |
| Fuel Oil #2 Prod. | Aromatic hydrocarbons | secondary | 5.23e-12 | 3.70e-09 |
| US electric grid | Benzo[a]pyrene | model/secondary | 5.02e-12 | 3.55e-09 |
| Fuel Oil #6 Prod. | Aromatic hydrocarbons | secondary | 4.60e-12 | 3.25e-09 |
| Fuel Oil #4 Prod. | Biphenyl | secondary | 4.46e-12 | 3.15e-09 |
| Fuel Oil #6 Prod. | Phenanthrene | secondary | 4.44e-12 | 3.14e-09 |
| Fuel Oil #4 Prod. | Chloroform | secondary | 4.27e-12 | 3.02e-09 |
| Fuel Oil #2 Prod. | Cumene | secondary | 3.95e-12 | 2.79e-09 |
| US electric grid | 2-Methylnaphthalene | model/secondary | 3.93e-12 | 2.78e-09 |
| Natural Gas Prod. | 2,4-Dinitrotoluene | secondary | 3.90e-12 | 2.76e-09 |
| Natural Gas Prod. | Benzo[g,h,i]perylene | secondary | 3.83e-12 | 2.71e-09 |
| Natural Gas Prod. | Benzo[a]pyrene | secondary | 3.78e-12 | 2.67e-09 |
| Fuel Oil #6 Prod. | Vinyl acetate | secondary | 3.12e-12 | 2.20e-09 |
| Fuel Oil #4 Prod. | Tetrachloroethylene | secondary | 3.11e-12 | 2.20e-09 |
| Fuel Oil #4 Prod. | Ethyl Chloride | secondary | 3.04e-12 | 2.15e-09 |
| US electric grid | 5-Methyl chrysene | model/secondary | 2.91e-12 | 2.06e-09 |
| Fuel Oil #4 Prod. | 1,2-Dichloroethane | secondary | 2.90e-12 | 2.05e-09 |
| Fuel Oil #4 Prod. | 1,4-Dichlorobenzene | secondary | 2.73e-12 | 1.93e-09 |
| Natural Gas Prod. | 2-Chloroacetophenone | secondary | 2.69e-12 | 1.90e-09 |
| Fuel Oil #4 Prod. | Fluorene | secondary | 2.66e-12 | 1.88e-09 |
| Fuel Oil #2 Prod. | Phenanthrene | secondary | 2.50e-12 | 1.76e-09 |
| Fuel Oil #6 Prod. | Biphenyl | secondary | 2.38e-12 | 1.68e-09 |
| Fuel Oil #6 Prod. | Chloroform | secondary | 2.28e-12 | 1.61e-09 |

## Table M-18. LCD LCIA Results for the Photochemical Smog Impact Category

| Process Group | Material | LCI Data Type | Photo. Smog (kg ethene-equivalents) | % of Total |
|---|---|---|---|---|
| Fuel Oil #4 Prod. | Fluoranthene | secondary | 2.15e-12 | 1.52e-09 |
| LPG Production | Polycyclic aromatic hydrocarbons | secondary | 2.13e-12 | 1.51e-09 |
| Fuel Oil #4 Prod. | 2-Methylnaphthalene | secondary | 1.98e-12 | 1.40e-09 |
| Fuel Oil #4 Prod. | Acenaphthene | secondary | 1.86e-12 | 1.31e-09 |
| Fuel Oil #2 Prod. | Vinyl acetate | secondary | 1.66e-12 | 1.17e-09 |
| Fuel Oil #6 Prod. | Tetrachloroethylene | secondary | 1.66e-12 | 1.17e-09 |
| Fuel Oil #4 Prod. | Ethylene dibromide | secondary | 1.65e-12 | 1.16e-09 |
| Fuel Oil #6 Prod. | Ethyl Chloride | secondary | 1.62e-12 | 1.15e-09 |
| Fuel Oil #4 Prod. | Chlorobenzene | secondary | 1.59e-12 | 1.13e-09 |
| Fuel Oil #6 Prod. | 1,2-Dichloroethane | secondary | 1.54e-12 | 1.09e-09 |
| Natural Gas Prod. | Benzo[b,j,k]fluoranthene | secondary | 1.53e-12 | 1.08e-09 |
| Fuel Oil #4 Prod. | 1,1,1-Trichloroethane | secondary | 1.45e-12 | 1.02e-09 |
| Fuel Oil #6 Prod. | Fluorene | secondary | 1.39e-12 | 9.83e-10 |
| Fuel Oil #4 Prod. | Pyrene | secondary | 1.32e-12 | 9.30e-10 |
| Natural Gas Prod. | Aromatic hydrocarbons | secondary | 1.27e-12 | 9.00e-10 |
| Fuel Oil #2 Prod. | Biphenyl | secondary | 1.27e-12 | 8.96e-10 |
| Fuel Oil #6 Prod. | 1,4-Dichlorobenzene | secondary | 1.23e-12 | 8.68e-10 |
| Fuel Oil #2 Prod. | Chloroform | secondary | 1.21e-12 | 8.58e-10 |
| Fuel Oil #6 Prod. | Fluoranthene | secondary | 1.12e-12 | 7.91e-10 |
| Fuel Oil #6 Prod. | Acenaphthene | secondary | 9.03e-13 | 6.39e-10 |
| Fuel Oil #6 Prod. | 2-Methylnaphthalene | secondary | 8.89e-13 | 6.29e-10 |
| Fuel Oil #2 Prod. | Tetrachloroethylene | secondary | 8.85e-13 | 6.25e-10 |
| Fuel Oil #6 Prod. | Ethylene dibromide | secondary | 8.78e-13 | 6.21e-10 |
| Fuel Oil #2 Prod. | 1,4-Dichlorobenzene | secondary | 8.74e-13 | 6.18e-10 |
| Fuel Oil #2 Prod. | Ethyl Chloride | secondary | 8.64e-13 | 6.11e-10 |
| Fuel Oil #6 Prod. | Chlorobenzene | secondary | 8.49e-13 | 6.00e-10 |
| Fuel Oil #2 Prod. | 1,2-Dichloroethane | secondary | 8.23e-13 | 5.82e-10 |
| Fuel Oil #4 Prod. | Acenaphthylene | secondary | 8.09e-13 | 5.72e-10 |
| Fuel Oil #6 Prod. | 1,1,1-Trichloroethane | secondary | 7.72e-13 | 5.46e-10 |
| Fuel Oil #4 Prod. | Anthracene | secondary | 7.71e-13 | 5.45e-10 |
| Fuel Oil #2 Prod. | Fluorene | secondary | 7.67e-13 | 5.42e-10 |
| Fuel Oil #4 Prod. | 2,4-Dinitrotoluene | secondary | 7.35e-13 | 5.20e-10 |
| Fuel Oil #6 Prod. | Pyrene | secondary | 6.59e-13 | 4.66e-10 |
| Fuel Oil #2 Prod. | 2-Methylnaphthalene | secondary | 6.34e-13 | 4.48e-10 |
| Fuel Oil #2 Prod. | Fluoranthene | secondary | 6.24e-13 | 4.41e-10 |
| Fuel Oil #2 Prod. | Acenaphthene | secondary | 5.66e-13 | 4.00e-10 |
| Fuel Oil #4 Prod. | 2-Chloroacetophenone | secondary | 5.07e-13 | 3.58e-10 |
| Fuel Oil #2 Prod. | Ethylene dibromide | secondary | 4.68e-13 | 3.31e-10 |
| Fuel Oil #2 Prod. | Chlorobenzene | secondary | 4.53e-13 | 3.20e-10 |
| Fuel Oil #4 Prod. | Chrysene | secondary | 4.32e-13 | 3.05e-10 |
| Fuel Oil #4 Prod. | Benzo[a]anthracene | secondary | 4.29e-13 | 3.03e-10 |
| Fuel Oil #6 Prod. | Acenaphthylene | secondary | 4.18e-13 | 2.95e-10 |
| Fuel Oil #2 Prod. | 1,1,1-Trichloroethane | secondary | 4.11e-13 | 2.91e-10 |
| Fuel Oil #2 Prod. | Pyrene | secondary | 3.92e-13 | 2.77e-10 |
| Fuel Oil #6 Prod. | 2,4-Dinitrotoluene | secondary | 3.92e-13 | 2.77e-10 |
| Fuel Oil #6 Prod. | Anthracene | secondary | 3.90e-13 | 2.76e-10 |
| Fuel Oil #4 Prod. | Indeno(1,2,3-cd)pyrene | secondary | 3.27e-13 | 2.31e-10 |
| Natural Gas Prod. | 5-Methyl chrysene | secondary | 3.06e-13 | 2.17e-10 |

## Table M-18. LCD LCIA Results for the Photochemical Smog Impact Category

| Process Group | Material | LCI Data Type | Photo. Smog (kg ethene-equivalents) | % of Total |
|---|---|---|---|---|
| Fuel Oil #4 Prod. | Benzo[b,j,k]fluoranthene | secondary | 2.89e-13 | 2.04e-10 |
| Fuel Oil #6 Prod. | 2-Chloroacetophenone | secondary | 2.70e-13 | 1.91e-10 |
| Fuel Oil #4 Prod. | Benzo[a]pyrene | secondary | 2.57e-13 | 1.82e-10 |
| Fuel Oil #2 Prod. | Acenaphthylene | secondary | 2.36e-13 | 1.67e-10 |
| Fuel Oil #2 Prod. | Anthracene | secondary | 2.28e-13 | 1.61e-10 |
| Fuel Oil #6 Prod. | Chrysene | secondary | 2.14e-13 | 1.51e-10 |
| Fuel Oil #2 Prod. | 2,4-Dinitrotoluene | secondary | 2.09e-13 | 1.48e-10 |
| Fuel Oil #6 Prod. | Benzo[a]anthracene | secondary | 2.02e-13 | 1.43e-10 |
| Fuel Oil #4 Prod. | Benzo[g,h,i]perylene | secondary | 1.90e-13 | 1.34e-10 |
| Fuel Oil #6 Prod. | Indeno(1,2,3-cd)pyrene | secondary | 1.58e-13 | 1.12e-10 |
| Fuel Oil #6 Prod. | Benzo[b,j,k]fluoranthene | secondary | 1.54e-13 | 1.09e-10 |
| Fuel Oil #2 Prod. | 2-Chloroacetophenone | secondary | 1.44e-13 | 1.02e-10 |
| Fuel Oil #2 Prod. | Benzo[a]anthracene | secondary | 1.33e-13 | 9.43e-11 |
| Fuel Oil #6 Prod. | Benzo[a]pyrene | secondary | 1.32e-13 | 9.35e-11 |
| Fuel Oil #2 Prod. | Chrysene | secondary | 1.30e-13 | 9.18e-11 |
| Fuel Oil #2 Prod. | Indeno(1,2,3-cd)pyrene | secondary | 1.00e-13 | 7.07e-11 |
| Fuel Oil #6 Prod. | Benzo[g,h,i]perylene | secondary | 8.88e-14 | 6.28e-11 |
| Fuel Oil #2 Prod. | Benzo[b,j,k]fluoranthene | secondary | 8.20e-14 | 5.80e-11 |
| Fuel Oil #2 Prod. | Benzo[a]pyrene | secondary | 7.51e-14 | 5.31e-11 |
| Fuel Oil #2 Prod. | Benzo[g,h,i]perylene | secondary | 5.92e-14 | 4.19e-11 |
| Fuel Oil #4 Prod. | 5-Methyl chrysene | secondary | 5.77e-14 | 4.08e-11 |
| Fuel Oil #6 Prod. | 5-Methyl chrysene | secondary | 3.08e-14 | 2.18e-11 |
| Fuel Oil #2 Prod. | 5-Methyl chrysene | secondary | 1.64e-14 | 1.16e-11 |
| Fuel Oil #4 Prod. | Polycyclic aromatic hydrocarbons | secondary | 1.56e-14 | 1.10e-11 |
| Fuel Oil #2 Prod. | Polycyclic aromatic hydrocarbons | secondary | 5.82e-15 | 4.11e-12 |
| Fuel Oil #6 Prod. | Polycyclic aromatic hydrocarbons | secondary | 5.11e-15 | 3.62e-12 |
| Natural Gas Prod. | Polycyclic aromatic hydrocarbons | secondary | 1.42e-15 | 1.00e-12 |
| **Total Manufacturing** | | | **1.18e-02** | **8.33e+00** |
| **Use, Maintenance and Repair Life-cycle Stage** | | | | |
| US electric grid | Methane | model/secondary | 1.68e-03 | 1.19e+00 |
| US electric grid | Isophorone | model/secondary | 1.48e-05 | 1.04e-02 |
| US electric grid | Formaldehyde | model/secondary | 1.33e-05 | 9.40e-03 |
| US electric grid | Acetaldehyde | model/secondary | 8.45e-06 | 5.98e-03 |
| US electric grid | Benzene | model/secondary | 8.23e-06 | 5.82e-03 |
| US electric grid | Propionaldehyde | model/secondary | 7.67e-06 | 5.42e-03 |
| US electric grid | Methyl ethyl ketone | model/secondary | 6.17e-06 | 4.37e-03 |
| US electric grid | Toluene | model/secondary | 5.34e-06 | 3.78e-03 |
| US electric grid | Acrolein | model/secondary | 4.30e-06 | 3.04e-03 |
| US electric grid | Ethylbenzene | model/secondary | 2.40e-06 | 1.70e-03 |
| US electric grid | Bromomethane | model/secondary | 2.13e-06 | 1.51e-03 |
| US electric grid | Xylene (mixed isomers) | model/secondary | 9.42e-07 | 6.66e-04 |
| US electric grid | Hexane | model/secondary | 9.33e-07 | 6.60e-04 |
| US electric grid | Styrene | model/secondary | 6.37e-07 | 4.50e-04 |
| US electric grid | Naphthalene | model/secondary | 5.19e-07 | 3.67e-04 |
| US electric grid | Benzyl chloride | model/secondary | 4.92e-07 | 3.48e-04 |
| US electric grid | Methyl tert-butyl ether | model/secondary | 4.66e-07 | 3.30e-04 |
| US electric grid | Phenol | model/secondary | 4.08e-07 | 2.88e-04 |
| US electric grid | Acetophenone | model/secondary | 3.82e-07 | 2.70e-04 |
| US electric grid | Methyl chloride | model/secondary | 3.73e-07 | 2.63e-04 |

## Table M-18. LCD LCIA Results for the Photochemical Smog Impact Category

| Process Group | Material | LCI Data Type | Photo. Smog (kg ethene-equivalents) | % of Total |
|---|---|---|---|---|
| US electric grid | Dichloromethane | model/secondary | 2.04e-07 | 1.44e-04 |
| US electric grid | Cumene | model/secondary | 1.35e-07 | 9.54e-05 |
| US electric grid | Phenanthrene | model/secondary | 7.12e-08 | 5.03e-05 |
| US electric grid | Vinyl acetate | model/secondary | 5.67e-08 | 4.01e-05 |
| US electric grid | Biphenyl | model/secondary | 4.33e-08 | 3.06e-05 |
| US electric grid | Chloroform | model/secondary | 4.15e-08 | 2.93e-05 |
| US electric grid | Tetrachloroethylene | model/secondary | 3.02e-08 | 2.14e-05 |
| US electric grid | Ethyl Chloride | model/secondary | 2.95e-08 | 2.09e-05 |
| US electric grid | 1,2-Dichloroethane | model/secondary | 2.81e-08 | 1.99e-05 |
| US electric grid | Fluorene | model/secondary | 2.38e-08 | 1.69e-05 |
| US electric grid | Fluoranthene | model/secondary | 1.91e-08 | 1.35e-05 |
| US electric grid | o-xylene | model/secondary | 1.62e-08 | 1.15e-05 |
| US electric grid | Acenaphthene | model/secondary | 1.61e-08 | 1.14e-05 |
| US electric grid | Ethylene dibromide | model/secondary | 1.60e-08 | 1.13e-05 |
| US electric grid | Chlorobenzene | model/secondary | 1.55e-08 | 1.09e-05 |
| US electric grid | 1,1,1-Trichloroethane | model/secondary | 1.50e-08 | 1.06e-05 |
| US electric grid | Pyrene | model/secondary | 9.46e-09 | 6.69e-06 |
| US electric grid | 2,4-Dinitrotoluene | model/secondary | 7.13e-09 | 5.04e-06 |
| US electric grid | Acenaphthylene | model/secondary | 6.41e-09 | 4.53e-06 |
| US electric grid | Anthracene | model/secondary | 5.53e-09 | 3.91e-06 |
| US electric grid | 2-Chloroacetophenone | model/secondary | 4.92e-09 | 3.48e-06 |
| US electric grid | Benzo[b,j,k]fluoranthene | model/secondary | 3.02e-09 | 2.14e-06 |
| US electric grid | Chrysene | model/secondary | 2.90e-09 | 2.05e-06 |
| US electric grid | Benzo[a]anthracene | model/secondary | 2.63e-09 | 1.86e-06 |
| US electric grid | Indeno(1,2,3-cd)pyrene | model/secondary | 1.87e-09 | 1.32e-06 |
| US electric grid | Benzo[g,h,i]perylene | model/secondary | 1.02e-09 | 7.24e-07 |
| US electric grid | Benzo[a]pyrene | model/secondary | 9.68e-10 | 6.84e-07 |
| US electric grid | 2-Methylnaphthalene | model/secondary | 7.57e-10 | 5.36e-07 |
| US electric grid | 5-Methyl chrysene | model/secondary | 5.60e-10 | 3.96e-07 |
| **Total Use, Maintenance and Repair** | | | **1.76e-03** | **1.25e+00** |
| **End-of-life Life-cycle Stage** | | | | |
| LCD landfilling | Hydrocarbons, remaining unspeciated | primary | 2.58e-05 | 1.83e-02 |
| US electric grid | Methane | model/secondary | 3.20e-07 | 2.26e-04 |
| LPG Production | Hydrocarbons, remaining unspeciated | secondary | 2.45e-07 | 1.73e-04 |
| LPG Production | Nonmethane hydrocarbons, remaining unspeciated | secondary | 1.67e-07 | 1.18e-04 |
| LCD landfilling | Methane | primary | 9.18e-08 | 6.49e-05 |
| LCD landfilling | Benzene | primary | 3.08e-08 | 2.18e-05 |
| LPG Production | Methane | secondary | 2.31e-08 | 1.64e-05 |
| LPG Production | Benzene | secondary | 1.07e-08 | 7.55e-06 |
| LCD landfilling | Toluene | primary | 6.48e-09 | 4.58e-06 |
| LCD landfilling | Xylene (mixed isomers) | primary | 4.54e-09 | 3.21e-06 |
| US electric grid | Isophorone | model/secondary | 2.80e-09 | 1.98e-06 |
| LPG Production | Aldehydes | secondary | 2.61e-09 | 1.84e-06 |
| US electric grid | Formaldehyde | model/secondary | 2.52e-09 | 1.78e-06 |
| LPG Production | Formaldehyde | secondary | 1.94e-09 | 1.37e-06 |
| US electric grid | Acetaldehyde | model/secondary | 1.60e-09 | 1.13e-06 |
| US electric grid | Benzene | model/secondary | 1.56e-09 | 1.10e-06 |
| US electric grid | Propionaldehyde | model/secondary | 1.46e-09 | 1.03e-06 |
| LPG Production | Ethane | secondary | 1.22e-09 | 8.60e-07 |

## Table M-18. LCD LCIA Results for the Photochemical Smog Impact Category

| Process Group | Material | LCI Data Type | Photo. Smog (kg ethene-equivalents) | % of Total |
|---|---|---|---|---|
| US electric grid | Methyl ethyl ketone | model/secondary | 1.17e-09 | 8.28e-07 |
| LPG Production | Pentane | secondary | 1.05e-09 | 7.39e-07 |
| US electric grid | Toluene | model/secondary | 1.01e-09 | 7.17e-07 |
| LCD landfilling | Ethylbenzene | primary | 9.02e-10 | 6.38e-07 |
| LPG Production | Butane | secondary | 8.24e-10 | 5.82e-07 |
| US electric grid | Acrolein | model/secondary | 8.16e-10 | 5.77e-07 |
| LPG Production | Hexane | secondary | 7.39e-10 | 5.22e-07 |
| US electric grid | Ethylbenzene | model/secondary | 4.56e-10 | 3.22e-07 |
| US electric grid | Bromomethane | model/secondary | 4.04e-10 | 2.86e-07 |
| US electric grid | Xylene (mixed isomers) | model/secondary | 1.79e-10 | 1.26e-07 |
| US electric grid | Hexane | model/secondary | 1.77e-10 | 1.25e-07 |
| US electric grid | Styrene | model/secondary | 1.21e-10 | 8.54e-08 |
| US electric grid | Naphthalene | model/secondary | 9.85e-11 | 6.97e-08 |
| US electric grid | Benzyl chloride | model/secondary | 9.34e-11 | 6.60e-08 |
| US electric grid | Methyl tert-butyl ether | model/secondary | 8.85e-11 | 6.25e-08 |
| US electric grid | Phenol | model/secondary | 7.73e-11 | 5.47e-08 |
| US electric grid | Acetophenone | model/secondary | 7.25e-11 | 5.13e-08 |
| US electric grid | Methyl chloride | model/secondary | 7.07e-11 | 5.00e-08 |
| US electric grid | Dichloromethane | model/secondary | 3.87e-11 | 2.73e-08 |
| US electric grid | Cumene | model/secondary | 2.56e-11 | 1.81e-08 |
| LCD landfilling | Trichloroethylene | primary | 2.18e-11 | 1.54e-08 |
| LCD incineration | Trichloroethylene | secondary | 1.69e-11 | 1.19e-08 |
| LCD landfilling | Vinyl chloride | primary | 1.38e-11 | 9.78e-09 |
| US electric grid | Phenanthrene | model/secondary | 1.35e-11 | 9.55e-09 |
| LPG Production | Isophorone | secondary | 1.16e-11 | 8.22e-09 |
| LCD landfilling | Dichloromethane | primary | 1.11e-11 | 7.82e-09 |
| US electric grid | Vinyl acetate | model/secondary | 1.08e-11 | 7.61e-09 |
| LCD incineration | Vinyl chloride | secondary | 1.07e-11 | 7.59e-09 |
| LPG Production | Toluene | secondary | 8.24e-12 | 5.83e-09 |
| US electric grid | Biphenyl | model/secondary | 8.22e-12 | 5.81e-09 |
| US electric grid | Chloroform | model/secondary | 7.87e-12 | 5.56e-09 |
| LCD landfilling | 1,2-Dichloroethane | primary | 6.92e-12 | 4.90e-09 |
| LCD landfilling | Carbon tetrachloride | primary | 6.92e-12 | 4.90e-09 |
| LCD landfilling | Chloroform | primary | 6.92e-12 | 4.90e-09 |
| LCD landfilling | Tetrachloroethylene | primary | 6.92e-12 | 4.90e-09 |
| LPG Production | Acetaldehyde | secondary | 6.66e-12 | 4.71e-09 |
| LPG Production | Propionaldehyde | secondary | 6.04e-12 | 4.27e-09 |
| US electric grid | Tetrachloroethylene | model/secondary | 5.73e-12 | 4.05e-09 |
| US electric grid | Ethyl Chloride | model/secondary | 5.60e-12 | 3.96e-09 |
| LCD incineration | Carbon tetrachloride | secondary | 5.37e-12 | 3.80e-09 |
| US electric grid | 1,2-Dichloroethane | model/secondary | 5.33e-12 | 3.77e-09 |
| LPG Production | Methyl ethyl ketone | secondary | 4.86e-12 | 3.44e-09 |
| US electric grid | Fluorene | model/secondary | 4.52e-12 | 3.20e-09 |
| US electric grid | Fluoranthene | model/secondary | 3.62e-12 | 2.56e-09 |
| LPG Production | Acrolein | secondary | 3.39e-12 | 2.39e-09 |
| LPG Production | o-xylene | secondary | 3.09e-12 | 2.19e-09 |
| US electric grid | o-xylene | model/secondary | 3.08e-12 | 2.17e-09 |
| US electric grid | Acenaphthene | model/secondary | 3.06e-12 | 2.16e-09 |
| US electric grid | Ethylene dibromide | model/secondary | 3.03e-12 | 2.14e-09 |
| US electric grid | Chlorobenzene | model/secondary | 2.93e-12 | 2.07e-09 |

## Table M-18. LCD LCIA Results for the Photochemical Smog Impact Category

| Process Group | Material | LCI Data Type | Photo. Smog (kg ethene-equivalents) | % of Total |
|---|---|---|---|---|
| US electric grid | 1,1,1-Trichloroethane | model/secondary | 2.85e-12 | 2.02e-09 |
| LPG Production | n-Propane | secondary | 2.76e-12 | 1.95e-09 |
| LPG Production | Ethylbenzene | secondary | 1.90e-12 | 1.35e-09 |
| US electric grid | Pyrene | model/secondary | 1.79e-12 | 1.27e-09 |
| LPG Production | Bromomethane | secondary | 1.68e-12 | 1.19e-09 |
| US electric grid | 2,4-Dinitrotoluene | model/secondary | 1.35e-12 | 9.57e-10 |
| US electric grid | Acenaphthylene | model/secondary | 1.22e-12 | 8.59e-10 |
| US electric grid | Anthracene | model/secondary | 1.05e-12 | 7.42e-10 |
| LPG Production | Naphthalene | secondary | 1.05e-12 | 7.40e-10 |
| US electric grid | 2-Chloroacetophenone | model/secondary | 9.34e-13 | 6.60e-10 |
| US electric grid | Benzo[b,j,k]fluoranthene | model/secondary | 5.73e-13 | 4.05e-10 |
| US electric grid | Chrysene | model/secondary | 5.50e-13 | 3.89e-10 |
| LPG Production | Styrene | secondary | 5.01e-13 | 3.54e-10 |
| US electric grid | Benzo[a]anthracene | model/secondary | 5.00e-13 | 3.53e-10 |
| LPG Production | Benzyl chloride | secondary | 3.87e-13 | 2.74e-10 |
| LPG Production | Methyl tert-butyl ether | secondary | 3.67e-13 | 2.60e-10 |
| US electric grid | Indeno(1,2,3-cd)pyrene | model/secondary | 3.55e-13 | 2.51e-10 |
| LPG Production | Phenol | secondary | 3.21e-13 | 2.27e-10 |
| LPG Production | Acetophenone | secondary | 3.01e-13 | 2.13e-10 |
| LPG Production | Methyl chloride | secondary | 2.93e-13 | 2.07e-10 |
| US electric grid | Benzo[g,h,i]perylene | model/secondary | 1.94e-13 | 1.37e-10 |
| US electric grid | Benzo[a]pyrene | model/secondary | 1.84e-13 | 1.30e-10 |
| LPG Production | Dichloromethane | secondary | 1.61e-13 | 1.13e-10 |
| LPG Production | Aromatic hydrocarbons | secondary | 1.57e-13 | 1.11e-10 |
| US electric grid | 2-Methylnaphthalene | model/secondary | 1.44e-13 | 1.02e-10 |
| US electric grid | 5-Methyl chrysene | model/secondary | 1.06e-13 | 7.52e-11 |
| LPG Production | Cumene | secondary | 1.06e-13 | 7.52e-11 |
| LPG Production | Phenanthrene | secondary | 6.79e-14 | 4.80e-11 |
| LPG Production | Vinyl acetate | secondary | 4.47e-14 | 3.16e-11 |
| LPG Production | Biphenyl | secondary | 3.41e-14 | 2.41e-11 |
| LPG Production | Chloroform | secondary | 3.27e-14 | 2.31e-11 |
| LPG Production | 1,4-Dichlorobenzene | secondary | 2.48e-14 | 1.76e-11 |
| LPG Production | Tetrachloroethylene | secondary | 2.38e-14 | 1.68e-11 |
| LPG Production | Ethyl Chloride | secondary | 2.32e-14 | 1.64e-11 |
| LPG Production | 1,2-Dichloroethane | secondary | 2.21e-14 | 1.57e-11 |
| LPG Production | Fluorene | secondary | 2.08e-14 | 1.47e-11 |
| LPG Production | 2-Methylnaphthalene | secondary | 1.80e-14 | 1.27e-11 |
| LPG Production | Fluoranthene | secondary | 1.70e-14 | 1.20e-11 |
| LPG Production | Acenaphthene | secondary | 1.57e-14 | 1.11e-11 |
| LPG Production | Ethylene dibromide | secondary | 1.26e-14 | 8.90e-12 |
| LPG Production | Chlorobenzene | secondary | 1.22e-14 | 8.61e-12 |
| LPG Production | 1,1,1-Trichloroethane | secondary | 1.11e-14 | 7.83e-12 |
| LPG Production | Pyrene | secondary | 1.08e-14 | 7.63e-12 |
| LPG Production | Acenaphthylene | secondary | 6.41e-15 | 4.53e-12 |
| LPG Production | Anthracene | secondary | 6.25e-15 | 4.42e-12 |
| LPG Production | 2,4-Dinitrotoluene | secondary | 5.62e-15 | 3.97e-12 |
| LPG Production | 2-Chloroacetophenone | secondary | 3.87e-15 | 2.74e-12 |
| LPG Production | Benzo[a]anthracene | secondary | 3.74e-15 | 2.65e-12 |

## Table M-18. LCD LCIA Results for the Photochemical Smog Impact Category

| Process Group | Material | LCI Data Type | Photo. Smog (kg ethene-equivalents) | % of Total |
|---|---|---|---|---|
| LPG Production | Chrysene | secondary | 3.59e-15 | 2.54e-12 |
| LPG Production | Indeno(1,2,3-cd)pyrene | secondary | 2.78e-15 | 1.97e-12 |
| LPG Production | Benzo[b,j,k]fluoranthene | secondary | 2.21e-15 | 1.56e-12 |
| LPG Production | Benzo[a]pyrene | secondary | 2.05e-15 | 1.45e-12 |
| LPG Production | Benzo[g,h,i]perylene | secondary | 1.66e-15 | 1.18e-12 |
| LPG Production | 5-Methyl chrysene | secondary | 4.41e-16 | 3.12e-13 |
| LPG Production | Polycyclic aromatic hydrocarbons | secondary | 1.75e-16 | 1.24e-13 |
| Natural Gas Prod. | Polycyclic aromatic hydrocarbons | secondary | -2.97e-16 | -2.10e-13 |
| LCD incineration | Polycyclic aromatic hydrocarbons | secondary | -4.52e-15 | -3.20e-12 |
| Natural Gas Prod. | 5-Methyl chrysene | secondary | -6.43e-14 | -4.55e-11 |
| Fuel Oil #4 Prod. | Polycyclic aromatic hydrocarbons | secondary | -7.19e-14 | -5.08e-11 |
| Fuel Oil #4 Prod. | 5-Methyl chrysene | secondary | -2.66e-13 | -1.88e-10 |
| Natural Gas Prod. | Aromatic hydrocarbons | secondary | -2.67e-13 | -1.89e-10 |
| Natural Gas Prod. | Benzo[b,j,k]fluoranthene | secondary | -3.22e-13 | -2.27e-10 |
| Natural Gas Prod. | 2-Chloroacetophenone | secondary | -5.65e-13 | -3.99e-10 |
| Natural Gas Prod. | Benzo[a]pyrene | secondary | -7.93e-13 | -5.61e-10 |
| Natural Gas Prod. | Benzo[g,h,i]perylene | secondary | -8.04e-13 | -5.69e-10 |
| Natural Gas Prod. | 2,4-Dinitrotoluene | secondary | -8.19e-13 | -5.79e-10 |
| Fuel Oil #4 Prod. | Benzo[g,h,i]perylene | secondary | -8.74e-13 | -6.18e-10 |
| Fuel Oil #4 Prod. | Benzo[a]pyrene | secondary | -1.18e-12 | -8.37e-10 |
| Natural Gas Prod. | Indeno(1,2,3-cd)pyrene | secondary | -1.24e-12 | -8.78e-10 |
| Fuel Oil #4 Prod. | Benzo[b,j,k]fluoranthene | secondary | -1.33e-12 | -9.40e-10 |
| Natural Gas Prod. | Chrysene | secondary | -1.36e-12 | -9.62e-10 |
| Natural Gas Prod. | Benzo[a]anthracene | secondary | -1.41e-12 | -9.98e-10 |
| Fuel Oil #4 Prod. | Indeno(1,2,3-cd)pyrene | secondary | -1.51e-12 | -1.07e-09 |
| Natural Gas Prod. | 1,1,1-Trichloroethane | secondary | -1.61e-12 | -1.14e-09 |
| Natural Gas Prod. | Acenaphthylene | secondary | -1.76e-12 | -1.25e-09 |
| Natural Gas Prod. | Chlorobenzene | secondary | -1.78e-12 | -1.25e-09 |
| Natural Gas Prod. | Ethylene dibromide | secondary | -1.83e-12 | -1.30e-09 |
| Fuel Oil #4 Prod. | Benzo[a]anthracene | secondary | -1.98e-12 | -1.40e-09 |
| Fuel Oil #4 Prod. | Chrysene | secondary | -1.99e-12 | -1.41e-09 |
| Natural Gas Prod. | Anthracene | secondary | -2.02e-12 | -1.43e-09 |
| Fuel Oil #4 Prod. | 2-Chloroacetophenone | secondary | -2.34e-12 | -1.65e-09 |
| Natural Gas Prod. | 1,2-Dichloroethane | secondary | -3.23e-12 | -2.28e-09 |
| Natural Gas Prod. | Acenaphthene | secondary | -3.34e-12 | -2.36e-09 |
| Fuel Oil #4 Prod. | 2,4-Dinitrotoluene | secondary | -3.39e-12 | -2.39e-09 |
| Natural Gas Prod. | Ethyl Chloride | secondary | -3.39e-12 | -2.40e-09 |
| Natural Gas Prod. | Tetrachloroethylene | secondary | -3.47e-12 | -2.45e-09 |
| Fuel Oil #4 Prod. | Anthracene | secondary | -3.55e-12 | -2.51e-09 |
| Fuel Oil #4 Prod. | Acenaphthylene | secondary | -3.73e-12 | -2.64e-09 |
| Natural Gas Prod. | Fluoranthene | secondary | -3.87e-12 | -2.74e-09 |
| Natural Gas Prod. | Pyrene | secondary | -3.89e-12 | -2.75e-09 |
| LCD incineration | Aromatic hydrocarbons | secondary | -4.07e-12 | -2.88e-09 |
| LCD incineration | 2-Methylnaphthalene | secondary | -4.30e-12 | -3.04e-09 |
| Natural Gas Prod. | Fluorene | secondary | -4.34e-12 | -3.07e-09 |
| Natural Gas Prod. | Chloroform | secondary | -4.76e-12 | -3.37e-09 |
| Natural Gas Prod. | Biphenyl | secondary | -4.97e-12 | -3.51e-09 |
| LCD incineration | Dichlorobenzene (mixed isomers) | secondary | -5.93e-12 | -4.19e-09 |
| Fuel Oil #4 Prod. | Pyrene | secondary | -6.06e-12 | -4.29e-09 |
| Natural Gas Prod. | Vinyl acetate | secondary | -6.51e-12 | -4.60e-09 |

## Table M-18. LCD LCIA Results for the Photochemical Smog Impact Category

| Process Group | Material | LCI Data Type | Photo. Smog (kg ethene-equivalents) | % of Total |
|---|---|---|---|---|
| Fuel Oil #4 Prod. | 1,1,1-Trichloroethane | secondary | -6.67e-12 | -4.72e-09 |
| Fuel Oil #4 Prod. | Chlorobenzene | secondary | -7.34e-12 | -5.19e-09 |
| Fuel Oil #4 Prod. | Ethylene dibromide | secondary | -7.59e-12 | -5.37e-09 |
| Fuel Oil #4 Prod. | Acenaphthene | secondary | -8.56e-12 | -6.05e-09 |
| Fuel Oil #4 Prod. | 2-Methylnaphthalene | secondary | -9.12e-12 | -6.45e-09 |
| Fuel Oil #4 Prod. | Fluoranthene | secondary | -9.92e-12 | -7.01e-09 |
| Fuel Oil #4 Prod. | Fluorene | secondary | -1.23e-11 | -8.66e-09 |
| Fuel Oil #4 Prod. | 1,4-Dichlorobenzene | secondary | -1.26e-11 | -8.90e-09 |
| Fuel Oil #4 Prod. | 1,2-Dichloroethane | secondary | -1.33e-11 | -9.44e-09 |
| Natural Gas Prod. | 2-Methylnaphthalene | secondary | -1.36e-11 | -9.63e-09 |
| Fuel Oil #4 Prod. | Ethyl Chloride | secondary | -1.40e-11 | -9.91e-09 |
| Fuel Oil #4 Prod. | Tetrachloroethylene | secondary | -1.43e-11 | -1.01e-08 |
| Natural Gas Prod. | Cumene | secondary | -1.55e-11 | -1.10e-08 |
| LCD incineration | 5-Methyl chrysene | secondary | -1.61e-11 | -1.14e-08 |
| Natural Gas Prod. | Phenanthrene | secondary | -1.78e-11 | -1.25e-08 |
| Natural Gas Prod. | 1,4-Dichlorobenzene | secondary | -1.88e-11 | -1.33e-08 |
| Fuel Oil #4 Prod. | Chloroform | secondary | -1.97e-11 | -1.39e-08 |
| LCD incineration | Benzo[g,h,i]perylene | secondary | -2.00e-11 | -1.42e-08 |
| Fuel Oil #4 Prod. | Biphenyl | secondary | -2.06e-11 | -1.45e-08 |
| Natural Gas Prod. | Dichloromethane | secondary | -2.34e-11 | -1.65e-08 |
| Fuel Oil #4 Prod. | Vinyl acetate | secondary | -2.69e-11 | -1.90e-08 |
| LCD incineration | Benzo[a]pyrene | secondary | -2.81e-11 | -1.99e-08 |
| Fuel Oil #4 Prod. | Phenanthrene | secondary | -3.95e-11 | -2.80e-08 |
| Natural Gas Prod. | Methyl chloride | secondary | -4.28e-11 | -3.02e-08 |
| Natural Gas Prod. | Acetophenone | secondary | -4.39e-11 | -3.10e-08 |
| LCD incineration | Indeno(1,2,3-cd)pyrene | secondary | -4.51e-11 | -3.19e-08 |
| Natural Gas Prod. | Phenol | secondary | -4.68e-11 | -3.31e-08 |
| Natural Gas Prod. | Methyl tert-butyl ether | secondary | -5.35e-11 | -3.78e-08 |
| Natural Gas Prod. | Benzyl chloride | secondary | -5.65e-11 | -3.99e-08 |
| LCD incineration | Benzo[a]anthracene | secondary | -5.90e-11 | -4.17e-08 |
| Fuel Oil #4 Prod. | Cumene | secondary | -6.41e-11 | -4.53e-08 |
| Fuel Oil #4 Prod. | Aromatic hydrocarbons | secondary | -6.47e-11 | -4.57e-08 |
| Natural Gas Prod. | Styrene | secondary | -7.31e-11 | -5.17e-08 |
| LCD incineration | Chrysene | secondary | -7.36e-11 | -5.21e-08 |
| LCD incineration | Benzo[b,j,k]fluoranthene | secondary | -8.06e-11 | -5.70e-08 |
| Fuel Oil #4 Prod. | Dichloromethane | secondary | -9.68e-11 | -6.84e-08 |
| LCD incineration | Anthracene | secondary | -1.54e-10 | -1.09e-07 |
| Fuel Oil #4 Prod. | Methyl chloride | secondary | -1.77e-10 | -1.25e-07 |
| Fuel Oil #4 Prod. | Acetophenone | secondary | -1.81e-10 | -1.28e-07 |
| LCD incineration | Acenaphthylene | secondary | -1.84e-10 | -1.30e-07 |
| Fuel Oil #4 Prod. | Phenol | secondary | -1.93e-10 | -1.37e-07 |
| LCD incineration | 2,4-Dinitrotoluene | secondary | -2.05e-10 | -1.45e-07 |
| Fuel Oil #4 Prod. | Methyl tert-butyl ether | secondary | -2.21e-10 | -1.56e-07 |
| Fuel Oil #4 Prod. | Benzyl chloride | secondary | -2.34e-10 | -1.65e-07 |
| LCD incineration | Pyrene | secondary | -2.43e-10 | -1.72e-07 |
| Natural Gas Prod. | Bromomethane | secondary | -2.45e-10 | -1.73e-07 |
| Natural Gas Prod. | Ethylbenzene | secondary | -2.78e-10 | -1.97e-07 |
| Fuel Oil #4 Prod. | Styrene | secondary | -3.02e-10 | -2.14e-07 |

## Table M-18. LCD LCIA Results for the Photochemical Smog Impact Category

| Process Group | Material | LCI Data Type | Photo. Smog (kg ethene-equivalents) | % of Total |
|---|---|---|---|---|
| LCD incineration | Acenaphthene | secondary | -3.74e-10 | -2.65e-07 |
| LCD incineration | 1,1,1-Trichloroethane | secondary | -4.05e-10 | -2.86e-07 |
| Natural Gas Prod. | n-Propane | secondary | -4.43e-10 | -3.14e-07 |
| Natural Gas Prod. | Naphthalene | secondary | -4.44e-10 | -3.14e-07 |
| LCD incineration | Chlorobenzene | secondary | -4.45e-10 | -3.15e-07 |
| LCD incineration | Ethylene dibromide | secondary | -4.60e-10 | -3.25e-07 |
| Natural Gas Prod. | Acrolein | secondary | -4.94e-10 | -3.49e-07 |
| LCD incineration | Fluoranthene | secondary | -5.21e-10 | -3.68e-07 |
| Fuel Oil #4 Prod. | Naphthalene | secondary | -5.45e-10 | -3.85e-07 |
| LCD incineration | Fluorene | secondary | -6.68e-10 | -4.72e-07 |
| Natural Gas Prod. | Methyl ethyl ketone | secondary | -7.09e-10 | -5.01e-07 |
| LCD incineration | 1,2-Dichloroethane | secondary | -8.04e-10 | -5.68e-07 |
| LCD incineration | Ethyl Chloride | secondary | -8.50e-10 | -6.01e-07 |
| LCD incineration | Tetrachloroethylene | secondary | -8.65e-10 | -6.11e-07 |
| Natural Gas Prod. | Propionaldehyde | secondary | -8.80e-10 | -6.22e-07 |
| Natural Gas Prod. | Acetaldehyde | secondary | -9.70e-10 | -6.86e-07 |
| Fuel Oil #4 Prod. | Bromomethane | secondary | -1.01e-09 | -7.15e-07 |
| Fuel Oil #4 Prod. | Ethylbenzene | secondary | -1.15e-09 | -8.10e-07 |
| LCD incineration | Chloroform | secondary | -1.19e-09 | -8.40e-07 |
| LCD incineration | Biphenyl | secondary | -1.25e-09 | -8.81e-07 |
| LCD incineration | Vinyl acetate | secondary | -1.63e-09 | -1.15e-06 |
| Fuel Oil #4 Prod. | o-xylene | secondary | -1.63e-09 | -1.16e-06 |
| Fuel Oil #4 Prod. | n-Propane | secondary | -1.66e-09 | -1.17e-06 |
| Natural Gas Prod. | Isophorone | secondary | -1.70e-09 | -1.20e-06 |
| LCD incineration | Phenanthrene | secondary | -1.98e-09 | -1.40e-06 |
| Fuel Oil #4 Prod. | Acrolein | secondary | -2.04e-09 | -1.44e-06 |
| Fuel Oil #4 Prod. | Methyl ethyl ketone | secondary | -2.93e-09 | -2.07e-06 |
| Fuel Oil #4 Prod. | Propionaldehyde | secondary | -3.64e-09 | -2.57e-06 |
| LCD incineration | Cumene | secondary | -3.89e-09 | -2.75e-06 |
| Fuel Oil #4 Prod. | Acetaldehyde | secondary | -4.01e-09 | -2.84e-06 |
| Fuel Oil #4 Prod. | Toluene | secondary | -4.52e-09 | -3.20e-06 |
| LCD incineration | Dichloromethane | secondary | -5.86e-09 | -4.14e-06 |
| Fuel Oil #4 Prod. | Isophorone | secondary | -7.01e-09 | -4.96e-06 |
| Natural Gas Prod. | Toluene | secondary | -9.63e-09 | -6.80e-06 |
| LCD incineration | Methyl chloride | secondary | -1.07e-08 | -7.58e-06 |
| LCD incineration | Acetophenone | secondary | -1.10e-08 | -7.77e-06 |
| LCD incineration | Phenol | secondary | -1.17e-08 | -8.29e-06 |
| LCD incineration | Methyl tert-butyl ether | secondary | -1.34e-08 | -9.49e-06 |
| LCD incineration | Naphthalene | secondary | -1.35e-08 | -9.57e-06 |
| LCD incineration | Benzyl chloride | secondary | -1.42e-08 | -1.00e-05 |
| Natural Gas Prod. | o-xylene | secondary | -1.74e-08 | -1.23e-05 |
| LCD incineration | Styrene | secondary | -1.83e-08 | -1.30e-05 |
| LCD incineration | Xylene (mixed isomers) | secondary | -2.54e-08 | -1.79e-05 |
| Natural Gas Prod. | Formaldehyde | secondary | -3.37e-08 | -2.38e-05 |
| LCD incineration | Bromomethane | secondary | -6.14e-08 | -4.34e-05 |
| LCD incineration | Ethylbenzene | secondary | -6.84e-08 | -4.84e-05 |
| LCD incineration | n-Propane | secondary | -9.86e-08 | -6.97e-05 |
| LCD incineration | Acrolein | secondary | -1.24e-07 | -8.75e-05 |
| LCD incineration | Toluene | secondary | -1.59e-07 | -1.13e-04 |
| LCD incineration | Methyl ethyl ketone | secondary | -1.78e-07 | -1.26e-04 |

## Table M-18. LCD LCIA Results for the Photochemical Smog Impact Category

| Process Group | Material | LCI Data Type | Photo. Smog (kg ethene-equivalents) | % of Total |
|---|---|---|---|---|
| LCD incineration | Butane | secondary | -1.97e-07 | -1.39e-04 |
| LCD incineration | Hexane | secondary | -2.03e-07 | -1.44e-04 |
| LCD incineration | Propionaldehyde | secondary | -2.21e-07 | -1.56e-04 |
| LCD incineration | Acetaldehyde | secondary | -2.43e-07 | -1.72e-04 |
| LCD incineration | Pentane | secondary | -2.50e-07 | -1.76e-04 |
| LCD incineration | Ethane | secondary | -2.90e-07 | -2.05e-04 |
| Fuel Oil #4 Prod. | Hexane | secondary | -3.74e-07 | -2.65e-04 |
| Fuel Oil #4 Prod. | Butane | secondary | -4.17e-07 | -2.95e-04 |
| LCD incineration | Isophorone | secondary | -4.25e-07 | -3.01e-04 |
| Fuel Oil #4 Prod. | Pentane | secondary | -5.30e-07 | -3.74e-04 |
| Natural Gas Prod. | Hexane | secondary | -5.59e-07 | -3.95e-04 |
| Fuel Oil #4 Prod. | Ethane | secondary | -6.16e-07 | -4.36e-04 |
| Natural Gas Prod. | Butane | secondary | -6.24e-07 | -4.41e-04 |
| Natural Gas Prod. | Pentane | secondary | -7.91e-07 | -5.60e-04 |
| Natural Gas Prod. | Ethane | secondary | -9.20e-07 | -6.51e-04 |
| LCD incineration | Formaldehyde | secondary | -1.06e-06 | -7.52e-04 |
| Fuel Oil #4 Prod. | Aldehydes | secondary | -1.32e-06 | -9.32e-04 |
| Fuel Oil #4 Prod. | Formaldehyde | secondary | -1.34e-06 | -9.48e-04 |
| Natural Gas Prod. | Aldehydes | secondary | -1.58e-06 | -1.12e-03 |
| Fuel Oil #4 Prod. | Benzene | secondary | -5.41e-06 | -3.82e-03 |
| LCD incineration | Benzene | secondary | -6.58e-06 | -4.65e-03 |
| Natural Gas Prod. | Hydrocarbons, remaining unspeciated | secondary | -8.20e-06 | -5.80e-03 |
| Fuel Oil #4 Prod. | Methane | secondary | -1.30e-05 | -9.16e-03 |
| LCD incineration | Aldehydes | secondary | -4.38e-05 | -3.10e-02 |
| LCD incineration | Methane | secondary | -6.89e-05 | -4.87e-02 |
| Natural Gas Prod. | Benzene | secondary | -7.92e-05 | -5.60e-02 |
| LCD incineration | Nonmethane hydrocarbons, remaining unspeciated | secondary | -9.99e-05 | -7.07e-02 |
| Fuel Oil #4 Prod. | Nonmethane hydrocarbons, remaining unspeciated | secondary | -1.03e-04 | -7.27e-02 |
| Natural Gas Prod. | Methane | secondary | -1.16e-04 | -8.22e-02 |
| LCD incineration | Hydrocarbons, remaining unspeciated | secondary | -1.24e-04 | -8.77e-02 |
| Fuel Oil #4 Prod. | Hydrocarbons, remaining unspeciated | secondary | -1.53e-04 | -1.08e-01 |
| Natural Gas Prod. | Nonmethane hydrocarbons, remaining unspeciated | secondary | -2.98e-04 | -2.11e-01 |
| **Total End-of-life** | | | **-1.11e-03** | **-7.82e-01** |
| **Total All Life-cycle Stages** | | | **1.41e-01** | **1.00e+02** |

## Table M-19. CRT LCIA Results for the Acidification Impact Category

| Process Group | Material | LCI Data Type | Acidification (kg SO2 Equivalents) | % of Total |
|---|---|---|---|---|
| **Materials Processing Life-cycle Stage** | | | | |
| Invar | Sulfur dioxide | secondary | 2.50e-01 | 4.75e+00 |
| Steel Prod., cold-rolled, semi-finished | Sulfur dioxide | secondary | 3.84e-02 | 7.31e-01 |
| Aluminum Prod. | Sulfur dioxide | secondary | 2.09e-02 | 3.98e-01 |
| Polycarbonate Production | Nitrogen dioxide | secondary | 1.36e-02 | 2.59e-01 |
| Polycarbonate Production | Sulfur dioxide | secondary | 1.20e-02 | 2.29e-01 |
| Steel Prod., cold-rolled, semi-finished | Nitrogen dioxide | secondary | 9.36e-03 | 1.78e-01 |
| Lead | Sulfur dioxide | secondary | 6.92e-03 | 1.32e-01 |
| Styrene-butadiene Copolymer Prod. | Sulfur oxides | secondary | 5.71e-03 | 1.09e-01 |
| Aluminum Prod. | Nitrogen dioxide | secondary | 4.99e-03 | 9.51e-02 |
| Styrene-butadiene Copolymer Prod. | Nitrogen oxides | secondary | 4.89e-03 | 9.32e-02 |
| ABS Production | Sulfur dioxide | secondary | 4.24e-03 | 8.07e-02 |
| Ferrite mfg. | Sulfur dioxide | secondary | 3.56e-03 | 6.78e-02 |
| Invar | Nitrogen dioxide | secondary | 3.55e-03 | 6.75e-02 |
| ABS Production | Nitrogen dioxide | secondary | 3.26e-03 | 6.21e-02 |
| Lead | Nitrogen dioxide | secondary | 2.93e-03 | 5.58e-02 |
| Polystyrene Prod., high-impact | Sulfur dioxide | secondary | 1.81e-03 | 3.45e-02 |
| Ferrite mfg. | Nitrogen dioxide | secondary | 1.42e-03 | 2.70e-02 |
| Polystyrene Prod., high-impact | Nitrogen dioxide | secondary | 1.27e-03 | 2.42e-02 |
| Steel Prod., cold-rolled, semi-finished | Ammonia | secondary | 7.79e-04 | 1.48e-02 |
| ABS Production | Hydrochloric acid | secondary | 5.63e-04 | 1.07e-02 |
| Steel Prod., cold-rolled, semi-finished | Nitrous oxide | secondary | 5.44e-04 | 1.04e-02 |
| Steel Prod., cold-rolled, semi-finished | Hydrochloric acid | secondary | 3.93e-04 | 7.48e-03 |
| ABS Production | Hydrofluoric acid | secondary | 3.90e-04 | 7.42e-03 |
| Aluminum Prod. | Hydrofluoric acid | secondary | 3.85e-04 | 7.33e-03 |
| Invar | Hydrochloric acid | secondary | 3.56e-04 | 6.77e-03 |
| Aluminum Prod. | Hydrochloric acid | secondary | 3.43e-04 | 6.53e-03 |
| Lead | Hydrochloric acid | secondary | 2.06e-04 | 3.92e-03 |
| Ferrite mfg. | Hydrochloric acid | secondary | 1.33e-04 | 2.54e-03 |
| Aluminum Prod. | Nitrous oxide | secondary | 9.67e-05 | 1.84e-03 |
| Polycarbonate Production | Hydrochloric acid | secondary | 8.94e-05 | 1.70e-03 |
| Invar | Hydrofluoric acid | secondary | 4.30e-05 | 8.19e-04 |
| Steel Prod., cold-rolled, semi-finished | Hydrofluoric acid | secondary | 3.03e-05 | 5.77e-04 |
| Steel Prod., cold-rolled, semi-finished | Hydrogen sulfide | secondary | 2.55e-05 | 4.87e-04 |
| Lead | Hydrofluoric acid | secondary | 2.18e-05 | 4.16e-04 |
| ABS Production | Hydrogen sulfide | secondary | 1.90e-05 | 3.62e-04 |
| Aluminum Prod. | Ammonia | secondary | 1.69e-05 | 3.22e-04 |
| Lead | Nitrous oxide | secondary | 1.42e-05 | 2.71e-04 |
| Invar | Hydrogen sulfide | secondary | 1.37e-05 | 2.60e-04 |
| Styrene-butadiene Copolymer Prod. | Hydrochloric acid | secondary | 1.31e-05 | 2.50e-04 |
| Lead | Ammonia | secondary | 1.30e-05 | 2.47e-04 |
| Ferrite mfg. | Hydrofluoric acid | secondary | 1.02e-05 | 1.94e-04 |
| Ferrite mfg. | Hydrogen sulfide | secondary | 9.72e-06 | 1.85e-04 |
| Ferrite mfg. | Nitrous oxide | secondary | 7.44e-06 | 1.42e-04 |
| Aluminum Prod. | Hydrogen sulfide | secondary | 7.08e-06 | 1.35e-04 |
| Invar | Ammonia | secondary | 6.66e-06 | 1.27e-04 |
| Polycarbonate Production | Hydrofluoric acid | secondary | 5.91e-06 | 1.13e-04 |
| Lead | Hydrogen sulfide | secondary | 5.57e-06 | 1.06e-04 |
| Polystyrene Prod., high-impact | Hydrochloric acid | secondary | 4.66e-06 | 8.87e-05 |
| Polycarbonate Production | Hydrogen sulfide | secondary | 3.47e-06 | 6.61e-05 |
| Ferrite mfg. | Ammonia | secondary | 2.20e-06 | 4.19e-05 |

## Table M-19. CRT LCIA Results for the Acidification Impact Category

| Process Group | Material | LCI Data Type | Acidification (kg SO2 Equivalents) | % of Total |
|---|---|---|---|---|
| ABS Production | Ammonia | secondary | 1.59e-06 | 3.03e-05 |
| Styrene-butadiene Copolymer Prod. | Hydrofluoric acid | secondary | 6.62e-07 | 1.26e-05 |
| Styrene-butadiene Copolymer Prod. | Ammonia | secondary | 3.89e-07 | 7.41e-06 |
| Styrene-butadiene Copolymer Prod. | Hydrogen sulfide | secondary | 3.89e-07 | 7.41e-06 |
| Polycarbonate Production | Nitrous oxide | secondary | 3.23e-07 | 6.15e-06 |
| Polycarbonate Production | Sulfuric acid | secondary | 3.00e-07 | 5.72e-06 |
| ABS Production | Nitrous oxide | secondary | 1.48e-07 | 2.82e-06 |
| Styrene-butadiene Copolymer Prod. | Nitrous oxide | secondary | 1.45e-07 | 2.76e-06 |
| ABS Production | Sulfuric acid | secondary | 1.38e-07 | 2.62e-06 |
| Styrene-butadiene Copolymer Prod. | Sulfuric acid | secondary | 1.34e-07 | 2.56e-06 |
| Invar | Nitrous oxide | secondary | 3.39e-08 | 6.46e-07 |
| Invar | Sulfuric acid | secondary | 5.66e-11 | 1.08e-09 |
| Ferrite mfg. | Sulfuric acid | secondary | 5.53e-11 | 1.05e-09 |
| **Total Materials Processing** | | | **3.93e-01** | **7.48e+00** |
| **Manufacturing Life-cycle Stage** | | | | |
| LPG Production | Sulfur oxides | secondary | 8.01e-01 | 1.53e+01 |
| LPG Production | Nitrogen oxides | secondary | 4.01e-01 | 7.64e+00 |
| Japanese Electric Grid | Sulfur dioxide | model/secondary | 8.62e-02 | 1.64e+00 |
| US electric grid | Sulfur dioxide | model/secondary | 3.98e-02 | 7.58e-01 |
| Glass/frit | Nitrogen oxides | primary | 3.09e-02 | 5.88e-01 |
| Japanese Electric Grid | Nitrogen oxides | model/secondary | 2.85e-02 | 5.42e-01 |
| US electric grid | Nitrogen oxides | model/secondary | 1.32e-02 | 2.50e-01 |
| LPG Production | Nitrous oxide | secondary | 1.14e-02 | 2.16e-01 |
| CRT tube mfg. | Sulfur oxides | primary | 9.96e-03 | 1.90e-01 |
| LPG Production | Hydrochloric acid | secondary | 7.07e-03 | 1.35e-01 |
| Natural Gas Prod. | Nitrogen oxides | secondary | 6.53e-03 | 1.24e-01 |
| LPG Production | Hydrogen sulfide | secondary | 5.76e-03 | 1.10e-01 |
| Fuel Oil #6 Prod. | Sulfur oxides | secondary | 5.47e-03 | 1.04e-01 |
| LPG Production | Ammonia | secondary | 4.09e-03 | 7.79e-02 |
| Fuel Oil #6 Prod. | Nitrogen oxides | secondary | 2.87e-03 | 5.46e-02 |
| Fuel Oil #2 Prod. | Sulfur oxides | secondary | 2.44e-03 | 4.64e-02 |
| LPG Production | Hydrofluoric acid | secondary | 1.61e-03 | 3.06e-02 |
| CRT tube mfg. | Nitrogen oxides | primary | 1.52e-03 | 2.89e-02 |
| US electric grid | Hydrochloric acid | model/secondary | 1.51e-03 | 2.88e-02 |
| Fuel Oil #2 Prod. | Nitrogen oxides | secondary | 1.23e-03 | 2.34e-02 |
| Japanese Electric Grid | Hydrochloric acid | model/secondary | 1.21e-03 | 2.30e-02 |
| Glass/frit | Nitrogen oxides | primary | 3.73e-04 | 7.11e-03 |
| US electric grid | Hydrofluoric acid | model/secondary | 3.44e-04 | 6.54e-03 |
| Natural Gas Prod. | Ammonia | secondary | 2.94e-04 | 5.61e-03 |
| Natural Gas Prod. | Sulfur oxides | secondary | 2.76e-04 | 5.25e-03 |
| Japanese Electric Grid | Hydrofluoric acid | model/secondary | 2.74e-04 | 5.22e-03 |
| Fuel Oil #4 Prod. | Sulfur oxides | secondary | 2.45e-04 | 4.66e-03 |
| Fuel Oil #4 Prod. | Nitrogen oxides | secondary | 1.26e-04 | 2.39e-03 |
| Fuel Oil #6 Prod. | Nitrous oxide | secondary | 1.02e-04 | 1.93e-03 |
| Japanese Electric Grid | Nitrous oxide | model/secondary | 7.82e-05 | 1.49e-03 |
| Fuel Oil #6 Prod. | Hydrogen sulfide | secondary | 5.97e-05 | 1.14e-03 |
| Fuel Oil #6 Prod. | Hydrochloric acid | secondary | 5.70e-05 | 1.09e-03 |
| Glass/frit | Sulfur oxides | primary | 5.08e-05 | 9.68e-04 |
| US electric grid | Nitrous oxide | model/secondary | 3.80e-05 | 7.23e-04 |

## Table M-19. CRT LCIA Results for the Acidification Impact Category

| Process Group | Material | LCI Data Type | Acidification (kg SO2 Equivalents) | % of Total |
|---|---|---|---|---|
| Fuel Oil #2 Prod. | Nitrous oxide | secondary | 3.63e-05 | 6.91e-04 |
| Fuel Oil #2 Prod. | Hydrochloric acid | secondary | 2.22e-05 | 4.22e-04 |
| Fuel Oil #6 Prod. | Ammonia | secondary | 2.20e-05 | 4.20e-04 |
| Fuel Oil #2 Prod. | Hydrogen sulfide | secondary | 1.90e-05 | 3.62e-04 |
| Fuel Oil #6 Prod. | Hydrofluoric acid | secondary | 1.30e-05 | 2.47e-04 |
| Natural Gas Prod. | Hydrochloric acid | secondary | 1.23e-05 | 2.34e-04 |
| Fuel Oil #2 Prod. | Ammonia | secondary | 1.21e-05 | 2.30e-04 |
| Natural Gas Prod. | Nitrous oxide | secondary | 8.08e-06 | 1.54e-04 |
| Fuel Oil #2 Prod. | Hydrofluoric acid | secondary | 5.04e-06 | 9.60e-05 |
| Fuel Oil #4 Prod. | Nitrous oxide | secondary | 4.02e-06 | 7.66e-05 |
| Natural Gas Prod. | Hydrofluoric acid | secondary | 2.79e-06 | 5.31e-05 |
| Fuel Oil #4 Prod. | Hydrochloric acid | secondary | 2.36e-06 | 4.50e-05 |
| Fuel Oil #4 Prod. | Hydrogen sulfide | secondary | 2.23e-06 | 4.24e-05 |
| Fuel Oil #4 Prod. | Ammonia | secondary | 1.12e-06 | 2.13e-05 |
| Fuel Oil #4 Prod. | Hydrofluoric acid | secondary | 5.37e-07 | 1.02e-05 |
| Natural Gas Prod. | Hydrogen sulfide | secondary | 1.27e-07 | 2.41e-06 |
| **Total Manufacturing** | | | **1.47e+00** | **2.79e+01** |
| **Use, Maintenance and Repair Life-cycle Stage** | | | | |
| US electric grid | Sulfur dioxide | model/secondary | 2.49e+00 | 4.75e+01 |
| US electric grid | Nitrogen oxides | model/secondary | 8.24e-01 | 1.57e+01 |
| US electric grid | Hydrochloric acid | model/secondary | 9.47e-02 | 1.80e+00 |
| US electric grid | Hydrofluoric acid | model/secondary | 2.15e-02 | 4.10e-01 |
| US electric grid | Nitrous oxide | model/secondary | 2.38e-03 | 4.53e-02 |
| **Total Use, Maintenance and Repair** | | | **3.44e+00** | **6.54e+01** |
| **End-of-life Life-cycle Stage** | | | | |
| CRT landfilling | Nitrogen dioxide | primary | 1.30e-03 | 2.47e-02 |
| CRT Incineration | Sulfur dioxide | secondary | 3.00e-04 | 5.72e-03 |
| CRT landfilling | Sulfur dioxide | primary | 2.80e-04 | 5.33e-03 |
| US electric grid | Sulfur dioxide | model/secondary | 2.49e-04 | 4.75e-03 |
| US electric grid | Nitrogen oxides | model/secondary | 8.24e-05 | 1.57e-03 |
| US electric grid | Hydrochloric acid | model/secondary | 9.48e-06 | 1.80e-04 |
| LPG Production | Sulfur oxides | secondary | 6.92e-06 | 1.32e-04 |
| LPG Production | Nitrogen oxides | secondary | 3.46e-06 | 6.59e-05 |
| US electric grid | Hydrofluoric acid | model/secondary | 2.15e-06 | 4.10e-05 |
| CRT landfilling | Hydrochloric acid | primary | 9.00e-07 | 1.71e-05 |
| CRT landfilling | Hydrogen sulfide | primary | 4.33e-07 | 8.25e-06 |
| US electric grid | Nitrous oxide | model/secondary | 2.38e-07 | 4.53e-06 |
| LPG Production | Nitrous oxide | secondary | 9.80e-08 | 1.87e-06 |
| LPG Production | Hydrochloric acid | secondary | 6.10e-08 | 1.16e-06 |
| LPG Production | Hydrogen sulfide | secondary | 4.97e-08 | 9.47e-07 |
| LPG Production | Ammonia | secondary | 3.53e-08 | 6.73e-07 |
| LPG Production | Hydrofluoric acid | secondary | 1.39e-08 | 2.64e-07 |
| Natural Gas Prod. | Hydrogen sulfide | secondary | -6.34e-08 | -1.21e-06 |
| CRT Incineration | Hydrogen sulfide | secondary | -1.15e-06 | -2.19e-05 |
| Natural Gas Prod. | Hydrofluoric acid | secondary | -1.40e-06 | -2.66e-05 |
| Natural Gas Prod. | Nitrous oxide | secondary | -4.05e-06 | -7.72e-05 |
| Fuel Oil #4 Prod. | Hydrofluoric acid | secondary | -5.78e-06 | -1.10e-04 |
| Natural Gas Prod. | Hydrochloric acid | secondary | -6.16e-06 | -1.17e-04 |
| Fuel Oil #4 Prod. | Ammonia | secondary | -1.20e-05 | -2.29e-04 |
| Fuel Oil #4 Prod. | Hydrogen sulfide | secondary | -2.40e-05 | -4.56e-04 |

## Table M-19. CRT LCIA Results for the Acidification Impact Category

| Process Group | Material | LCI Data Type | Acidification (kg SO2 Equivalents) | % of Total |
|---|---|---|---|---|
| Fuel Oil #4 Prod. | Hydrochloric acid | secondary | -2.54e-05 | -4.84e-04 |
| CRT Incineration | Ammonia | secondary | -3.91e-05 | -7.44e-04 |
| Fuel Oil #4 Prod. | Nitrous oxide | secondary | -4.33e-05 | -8.24e-04 |
| Natural Gas Prod. | Sulfur oxides | secondary | -1.38e-04 | -2.63e-03 |
| Natural Gas Prod. | Ammonia | secondary | -1.48e-04 | -2.81e-03 |
| CRT Incineration | Hydrofluoric acid | secondary | -3.57e-04 | -6.80e-03 |
| CRT Incineration | Nitrous oxide | secondary | -7.29e-04 | -1.39e-02 |
| CRT Incineration | Hydrochloric acid | secondary | -8.95e-04 | -1.70e-02 |
| Fuel Oil #4 Prod. | Nitrogen oxides | secondary | -1.35e-03 | -2.57e-02 |
| Fuel Oil #4 Prod. | Sulfur oxides | secondary | -2.63e-03 | -5.01e-02 |
| Natural Gas Prod. | Nitrogen oxides | secondary | -3.27e-03 | -6.23e-02 |
| CRT Incineration | Nitrogen oxides | secondary | -8.78e-03 | -1.67e-01 |
| CRT Incineration | Sulfur oxides | secondary | -2.70e-02 | -5.14e-01 |
| **Total End-of-life** | | | **-4.32e-02** | **-8.23e-01** |
| **Total All Life-cycle Stages** | | | **5.25e+00** | **1.00e+02** |

## Table M-20. LCD LCIA Results for the Acidification Impact Category

| Process Group | Material | LCI Data Type | Acidification (kg SO2 Equivalents) | % of Total |
|---|---|---|---|---|
| **Materials Processing Life-cycle Stage** | | | | |
| Natural Gas Prod. | Nitrogen oxides | secondary | 4.56e-01 | 1.54e+01 |
| Natural Gas Prod. | Ammonia | secondary | 2.06e-02 | 6.95e-01 |
| Natural Gas Prod. | Sulfur oxides | secondary | 1.93e-02 | 6.51e-01 |
| Steel Prod., cold-rolled, semi-finished | Sulfur dioxide | secondary | 1.88e-02 | 6.36e-01 |
| PMMA Sheet Prod. | Sulfur dioxide | secondary | 1.30e-02 | 4.41e-01 |
| Aluminum Prod. | Sulfur dioxide | secondary | 7.77e-03 | 2.63e-01 |
| Polycarbonate Production | Nitrogen dioxide | secondary | 7.58e-03 | 2.56e-01 |
| PMMA Sheet Prod. | Nitrogen dioxide | secondary | 7.52e-03 | 2.54e-01 |
| Polycarbonate Production | Sulfur dioxide | secondary | 6.70e-03 | 2.27e-01 |
| Steel Prod., cold-rolled, semi-finished | Nitrogen dioxide | secondary | 4.59e-03 | 1.55e-01 |
| PET Resin Production | Sulfur oxides | secondary | 3.99e-03 | 1.35e-01 |
| Styrene-butadiene Copolymer Prod. | Sulfur oxides | secondary | 2.50e-03 | 8.43e-02 |
| Styrene-butadiene Copolymer Prod. | Nitrogen oxides | secondary | 2.14e-03 | 7.23e-02 |
| Aluminum Prod. | Nitrogen dioxide | secondary | 1.86e-03 | 6.28e-02 |
| PET Resin Production | Nitrogen oxides | secondary | 1.21e-03 | 4.08e-02 |
| Natural Gas Prod. | Hydrochloric acid | secondary | 8.57e-04 | 2.90e-02 |
| Natural Gas Prod. | Nitrous oxide | secondary | 5.65e-04 | 1.91e-02 |
| Steel Prod., cold-rolled, semi-finished | Ammonia | secondary | 3.82e-04 | 1.29e-02 |
| Steel Prod., cold-rolled, semi-finished | Nitrous oxide | secondary | 2.67e-04 | 9.01e-03 |
| Natural Gas Prod. | Hydrofluoric acid | secondary | 1.95e-04 | 6.58e-03 |
| Steel Prod., cold-rolled, semi-finished | Hydrochloric acid | secondary | 1.93e-04 | 6.51e-03 |
| Aluminum Prod. | Hydrofluoric acid | secondary | 1.43e-04 | 4.84e-03 |
| Aluminum Prod. | Hydrochloric acid | secondary | 1.28e-04 | 4.31e-03 |
| PMMA Sheet Prod. | Hydrochloric acid | secondary | 5.74e-05 | 1.94e-03 |
| Polycarbonate Production | Hydrochloric acid | secondary | 4.99e-05 | 1.69e-03 |
| Aluminum Prod. | Nitrous oxide | secondary | 3.60e-05 | 1.22e-03 |
| PET Resin Production | Hydrochloric acid | secondary | 2.80e-05 | 9.45e-04 |
| PMMA Sheet Prod. | Ammonia | secondary | 1.51e-05 | 5.12e-04 |
| Steel Prod., cold-rolled, semi-finished | Hydrofluoric acid | secondary | 1.48e-05 | 5.02e-04 |
| Steel Prod., cold-rolled, semi-finished | Hydrogen sulfide | secondary | 1.25e-05 | 4.23e-04 |
| Natural Gas Prod. | Hydrogen sulfide | secondary | 8.84e-06 | 2.99e-04 |
| Aluminum Prod. | Ammonia | secondary | 6.30e-06 | 2.13e-04 |
| Styrene-butadiene Copolymer Prod. | Hydrochloric acid | secondary | 5.73e-06 | 1.94e-04 |
| PMMA Sheet Prod. | Hydrofluoric acid | secondary | 5.52e-06 | 1.87e-04 |
| Polycarbonate Production | Hydrofluoric acid | secondary | 3.30e-06 | 1.12e-04 |
| PMMA Sheet Prod. | Hydrogen sulfide | secondary | 2.88e-06 | 9.75e-05 |
| Aluminum Prod. | Hydrogen sulfide | secondary | 2.64e-06 | 8.91e-05 |
| Polycarbonate Production | Hydrogen sulfide | secondary | 1.94e-06 | 6.55e-05 |
| PET Resin Production | Hydrofluoric acid | secondary | 1.45e-06 | 4.91e-05 |
| Styrene-butadiene Copolymer Prod. | Hydrofluoric acid | secondary | 2.89e-07 | 9.78e-06 |
| Polycarbonate Production | Nitrous oxide | secondary | 1.81e-07 | 6.10e-06 |
| PET Resin Production | Ammonia | secondary | 1.71e-07 | 5.77e-06 |
| PET Resin Production | Hydrogen sulfide | secondary | 1.71e-07 | 5.77e-06 |
| Styrene-butadiene Copolymer Prod. | Ammonia | secondary | 1.70e-07 | 5.75e-06 |
| Styrene-butadiene Copolymer Prod. | Hydrogen sulfide | secondary | 1.70e-07 | 5.75e-06 |
| Polycarbonate Production | Sulfuric acid | secondary | 1.68e-07 | 5.66e-06 |
| PMMA Sheet Prod. | Nitrous oxide | secondary | 1.34e-07 | 4.54e-06 |
| PMMA Sheet Prod. | Sulfuric acid | secondary | 1.25e-07 | 4.21e-06 |
| PET Resin Production | Nitrous oxide | secondary | 6.35e-08 | 2.15e-06 |
| Styrene-butadiene Copolymer Prod. | Nitrous oxide | secondary | 6.33e-08 | 2.14e-06 |

## Table M-20. LCD LCIA Results for the Acidification Impact Category

| Process Group | Material | LCI Data Type | Acidification (kg SO2 Equivalents) | % of Total |
|---|---|---|---|---|
| PET Resin Production | Sulfuric acid | secondary | 5.90e-08 | 1.99e-06 |
| Styrene-butadiene Copolymer Prod. | Sulfuric acid | secondary | 5.88e-08 | 1.99e-06 |
| **Total Materials Processing** | | | **5.76e-01** | **1.95e+01** |
| **Manufacturing Life-cycle Stage** | | | | |
| Monitor/module | Nitrogen oxides | primary | 3.84e-01 | 1.30e+01 |
| Japanese Electric Grid | Sulfur dioxide | model/secondary | 2.90e-01 | 9.80e+00 |
| Monitor/module | Ammonia | primary | 1.17e-01 | 3.96e+00 |
| Japanese Electric Grid | Nitrogen oxides | model/secondary | 9.57e-02 | 3.23e+00 |
| Monitor/module | Hydrofluoric acid | primary | 8.33e-02 | 2.82e+00 |
| Monitor/module | Hydrochloric acid | primary | 5.33e-02 | 1.80e+00 |
| LPG Production | Sulfur oxides | secondary | 3.85e-02 | 1.30e+00 |
| Backlight | Nitrogen oxides | primary | 2.06e-02 | 6.97e-01 |
| LPG Production | Nitrogen oxides | secondary | 1.92e-02 | 6.50e-01 |
| Natural Gas Prod. | Nitrogen oxides | secondary | 1.03e-02 | 3.48e-01 |
| US electric grid | Sulfur dioxide | model/secondary | 4.83e-03 | 1.63e-01 |
| Japanese Electric Grid | Hydrochloric acid | model/secondary | 4.06e-03 | 1.37e-01 |
| US electric grid | Nitrogen oxides | model/secondary | 1.60e-03 | 5.39e-02 |
| LCD glass mfg. | Nitrogen oxides | primary | 1.43e-03 | 4.84e-02 |
| Monitor/module | Sulfur oxides | primary | 1.12e-03 | 3.77e-02 |
| Japanese Electric Grid | Hydrofluoric acid | model/secondary | 9.23e-04 | 3.12e-02 |
| LPG Production | Nitrous oxide | secondary | 5.45e-04 | 1.84e-02 |
| Natural Gas Prod. | Ammonia | secondary | 4.64e-04 | 1.57e-02 |
| Natural Gas Prod. | Sulfur oxides | secondary | 4.35e-04 | 1.47e-02 |
| Fuel Oil #4 Prod. | Sulfur oxides | secondary | 3.77e-04 | 1.28e-02 |
| LPG Production | Hydrochloric acid | secondary | 3.39e-04 | 1.15e-02 |
| Panel components | Nitrogen oxides | primary | 2.88e-04 | 9.73e-03 |
| LPG Production | Hydrogen sulfide | secondary | 2.77e-04 | 9.35e-03 |
| Japanese Electric Grid | Nitrous oxide | model/secondary | 2.63e-04 | 8.89e-03 |
| LPG Production | Ammonia | secondary | 1.96e-04 | 6.64e-03 |
| Fuel Oil #4 Prod. | Nitrogen oxides | secondary | 1.94e-04 | 6.54e-03 |
| Fuel Oil #6 Prod. | Sulfur oxides | secondary | 1.86e-04 | 6.29e-03 |
| US electric grid | Hydrochloric acid | model/secondary | 1.83e-04 | 6.20e-03 |
| Monitor/module | Nitric acid | primary | 1.37e-04 | 4.63e-03 |
| Fuel Oil #2 Prod. | Sulfur oxides | secondary | 1.14e-04 | 3.84e-03 |
| Fuel Oil #6 Prod. | Nitrogen oxides | secondary | 9.76e-05 | 3.30e-03 |
| LPG Production | Hydrofluoric acid | secondary | 7.71e-05 | 2.60e-03 |
| Fuel Oil #2 Prod. | Nitrogen oxides | secondary | 5.74e-05 | 1.94e-03 |
| Monitor/module | Phosphoric acid | primary | 4.75e-05 | 1.61e-03 |
| US electric grid | Hydrofluoric acid | model/secondary | 4.17e-05 | 1.41e-03 |
| Natural Gas Prod. | Hydrochloric acid | secondary | 1.94e-05 | 6.54e-04 |
| Natural Gas Prod. | Nitrous oxide | secondary | 1.27e-05 | 4.31e-04 |
| Panel components | Hydrochloric acid | primary | 6.44e-06 | 2.18e-04 |
| Fuel Oil #4 Prod. | Nitrous oxide | secondary | 6.20e-06 | 2.10e-04 |
| US electric grid | Nitrous oxide | model/secondary | 4.61e-06 | 1.56e-04 |
| Natural Gas Prod. | Hydrofluoric acid | secondary | 4.40e-06 | 1.49e-04 |
| Fuel Oil #4 Prod. | Hydrochloric acid | secondary | 3.64e-06 | 1.23e-04 |
| Fuel Oil #6 Prod. | Nitrous oxide | secondary | 3.46e-06 | 1.17e-04 |
| Fuel Oil #4 Prod. | Hydrogen sulfide | secondary | 3.43e-06 | 1.16e-04 |
| LCD glass mfg. | Sulfur oxides | primary | 2.35e-06 | 7.96e-05 |

## Table M-20. LCD LCIA Results for the Acidification Impact Category

| Process Group | Material | LCI Data Type | Acidification (kg SO2 Equivalents) | % of Total |
|---|---|---|---|---|
| Fuel Oil #6 Prod. | Hydrogen sulfide | secondary | 2.03e-06 | 6.87e-05 |
| Fuel Oil #6 Prod. | Hydrochloric acid | secondary | 1.94e-06 | 6.56e-05 |
| Fuel Oil #4 Prod. | Ammonia | secondary | 1.72e-06 | 5.83e-05 |
| Fuel Oil #2 Prod. | Nitrous oxide | secondary | 1.69e-06 | 5.73e-05 |
| Fuel Oil #2 Prod. | Hydrochloric acid | secondary | 1.04e-06 | 3.50e-05 |
| Fuel Oil #2 Prod. | Hydrogen sulfide | secondary | 8.88e-07 | 3.00e-05 |
| Fuel Oil #4 Prod. | Hydrofluoric acid | secondary | 8.28e-07 | 2.80e-05 |
| Fuel Oil #6 Prod. | Ammonia | secondary | 7.50e-07 | 2.53e-05 |
| Fuel Oil #2 Prod. | Ammonia | secondary | 5.63e-07 | 1.90e-05 |
| Fuel Oil #6 Prod. | Hydrofluoric acid | secondary | 4.41e-07 | 1.49e-05 |
| Fuel Oil #2 Prod. | Hydrofluoric acid | secondary | 2.35e-07 | 7.95e-06 |
| Natural Gas Prod. | Hydrogen sulfide | secondary | 1.99e-07 | 6.74e-06 |
| **Total Manufacturing** | | | **1.13e+00** | **3.82e+01** |
| **Use, Maintenance and Repair Life-cycle Stage** | | | | |
| US electric grid | Sulfur dioxide | model/secondary | 9.30e-01 | 3.14e+01 |
| US electric grid | Nitrogen oxides | model/secondary | 3.08e-01 | 1.04e+01 |
| US electric grid | Hydrochloric acid | model/secondary | 3.53e-02 | 1.19e+00 |
| US electric grid | Hydrofluoric acid | model/secondary | 8.03e-03 | 2.71e-01 |
| US electric grid | Nitrous oxide | model/secondary | 8.88e-04 | 3.00e-02 |
| **Total Use, Maintenance, and Repair** | | | **1.28e+00** | **4.33e+01** |
| **End-of-life Life-cycle Stage** | | | | |
| LCD landfilling | Nitrogen dioxide | primary | 3.12e-04 | 1.06e-02 |
| US electric grid | Sulfur dioxide | model/secondary | 1.77e-04 | 5.97e-03 |
| LCD landfilling | Sulfur dioxide | primary | 6.74e-05 | 2.28e-03 |
| US electric grid | Nitrogen oxides | model/secondary | 5.83e-05 | 1.97e-03 |
| LCD incineration | Sulfur dioxide | secondary | 5.23e-05 | 1.77e-03 |
| US electric grid | Hydrochloric acid | model/secondary | 6.71e-06 | 2.27e-04 |
| LPG Production | Sulfur oxides | secondary | 3.16e-06 | 1.07e-04 |
| LPG Production | Nitrogen oxides | secondary | 1.58e-06 | 5.34e-05 |
| US electric grid | Hydrofluoric acid | model/secondary | 1.52e-06 | 5.15e-05 |
| LCD landfilling | Hydrochloric acid | primary | 2.17e-07 | 7.33e-06 |
| US electric grid | Nitrous oxide | model/secondary | 1.68e-07 | 5.69e-06 |
| LCD landfilling | Hydrogen sulfide | primary | 1.04e-07 | 3.52e-06 |
| LPG Production | Nitrous oxide | secondary | 4.47e-08 | 1.51e-06 |
| LPG Production | Hydrochloric acid | secondary | 2.78e-08 | 9.41e-07 |
| LPG Production | Hydrogen sulfide | secondary | 2.27e-08 | 7.67e-07 |
| LPG Production | Ammonia | secondary | 1.61e-08 | 5.45e-07 |
| LPG Production | Hydrofluoric acid | secondary | 6.33e-09 | 2.14e-07 |
| Natural Gas Prod. | Hydrogen sulfide | secondary | -4.19e-08 | -1.42e-06 |
| Natural Gas Prod. | Hydrofluoric acid | secondary | -9.23e-07 | -3.12e-05 |
| LCD incineration | Hydrogen sulfide | secondary | -9.64e-07 | -3.26e-05 |
| Natural Gas Prod. | Nitrous oxide | secondary | -2.68e-06 | -9.04e-05 |
| Fuel Oil #4 Prod. | Hydrofluoric acid | secondary | -3.81e-06 | -1.29e-04 |
| Natural Gas Prod. | Hydrochloric acid | secondary | -4.06e-06 | -1.37e-04 |
| Fuel Oil #4 Prod. | Ammonia | secondary | -7.95e-06 | -2.69e-04 |
| Fuel Oil #4 Prod. | Hydrogen sulfide | secondary | -1.58e-05 | -5.35e-04 |
| Fuel Oil #4 Prod. | Hydrochloric acid | secondary | -1.68e-05 | -5.67e-04 |
| LCD incineration | Ammonia | secondary | -2.53e-05 | -8.56e-04 |
| Fuel Oil #4 Prod. | Nitrous oxide | secondary | -2.86e-05 | -9.66e-04 |
| Natural Gas Prod. | Sulfur oxides | secondary | -9.13e-05 | -3.08e-03 |

## Table M-20. LCD LCIA Results for the Acidification Impact Category

| Process Group | Material | LCI Data Type | Acidification (kg SO2 Equivalents) | % of Total |
|---|---|---|---|---|
| Natural Gas Prod. | Ammonia | secondary | -9.75e-05 | -3.29e-03 |
| LCD incineration | Hydrofluoric acid | secondary | -2.31e-04 | -7.81e-03 |
| LCD incineration | Nitrous oxide | secondary | -4.72e-04 | -1.60e-02 |
| LCD incineration | Hydrochloric acid | secondary | -5.91e-04 | -2.00e-02 |
| Fuel Oil #4 Prod. | Nitrogen oxides | secondary | -8.92e-04 | -3.01e-02 |
| Fuel Oil #4 Prod. | Sulfur oxides | secondary | -1.74e-03 | -5.88e-02 |
| Natural Gas Prod. | Nitrogen oxides | secondary | -2.16e-03 | -7.30e-02 |
| LCD incineration | Nitrogen oxides | secondary | -6.52e-03 | -2.20e-01 |
| LCD incineration | Sulfur oxides | secondary | -1.75e-02 | -5.91e-01 |
| **Total End-of-life** | | | **-2.97e-02** | **-1.00e+00** |
| **Total All Life-cycle Stages** | | | **2.96e+00** | **1.00e+02** |

## Table M-21. CRT LCIA Results for the Air Particulates Impact Category

| Process Group | Materials | LCI Data Type | Air Particulates (kg) | % of total |
|---|---|---|---|---|
| **Materials Processing Life-cycle Stage** | | | | |
| Steel Prod., cold-rolled, semi-finished | PM | secondary | 1.05e-01 | 3.48e+01 |
| Aluminum Prod. | PM | secondary | 8.90e-03 | 2.96e+00 |
| Polycarbonate Production | PM | secondary | 6.46e-03 | 2.15e+00 |
| Invar | PM | secondary | 2.76e-03 | 9.15e-01 |
| Ferrite mfg. | PM | secondary | 1.72e-03 | 5.72e-01 |
| ABS Production | PM | secondary | 1.27e-03 | 4.22e-01 |
| Styrene-butadiene Copolymer Prod. | PM | secondary | 9.93e-04 | 3.30e-01 |
| Lead | PM | secondary | 8.41e-04 | 2.79e-01 |
| Polystyrene Prod., high-impact | PM | secondary | 3.02e-04 | 1.00e-01 |
| **Total Materials Processing** | | | **1.28e-01** | **4.25e+01** |
| **Manufacturing Life-cycle Stage** | | | | |
| LPG Production | PM | secondary | 1.29e-01 | 4.28e+01 |
| Japanese Electric Grid | PM-10 | model/secondary | 2.00e-03 | 6.64e-01 |
| Fuel Oil #6 Prod. | PM | secondary | 9.24e-04 | 3.07e-01 |
| US electric grid | PM-10 | model/secondary | 9.22e-04 | 3.06e-01 |
| Natural Gas Prod. | PM | secondary | 4.14e-04 | 1.38e-01 |
| Fuel Oil #2 Prod. | PM | secondary | 3.96e-04 | 1.31e-01 |
| LPG Production | PM-10 | secondary | 2.25e-04 | 7.47e-02 |
| Glass/frit | PM | primary | 1.09e-04 | 3.63e-02 |
| Fuel Oil #4 Prod. | PM | secondary | 4.05e-05 | 1.34e-02 |
| Fuel Oil #6 Prod. | PM-10 | secondary | 2.33e-06 | 7.74e-04 |
| Fuel Oil #2 Prod. | PM-10 | secondary | 7.42e-07 | 2.47e-04 |
| Glass/frit | PM | primary | 6.67e-07 | 2.21e-04 |
| Fuel Oil #4 Prod. | PM-10 | secondary | 8.70e-08 | 2.89e-05 |
| Natural Gas Prod. | PM-10 | secondary | 4.94e-09 | 1.64e-06 |
| **Total Manufacturing** | | | **1.34e-01** | **4.45e+01** |
| **Use, Maintenance and Repair Life-cycle Stage** | | | | |
| US electric grid | PM-10 | model/secondary | 5.78e-02 | 1.92e+01 |
| **Total Use, Maintenance and Repair** | | | **5.78e-02** | **1.92e+01** |
| **End-of-life Life-cycle Stage** | | | | |
| CRT landfilling | PM | primary | 2.08e-04 | 6.92e-02 |
| US electric grid | PM-10 | model/secondary | 5.78e-06 | 1.92e-03 |
| LPG Production | PM | secondary | 1.11e-06 | 3.70e-04 |
| LPG Production | PM-10 | secondary | 1.94e-09 | 6.45e-07 |
| Natural Gas Prod. | PM-10 | secondary | -2.48e-09 | -8.23e-07 |
| CRT Incineration | PM-10 | secondary | -6.30e-08 | -2.09e-05 |
| Fuel Oil #4 Prod. | PM-10 | secondary | -9.35e-07 | -3.11e-04 |
| Natural Gas Prod. | PM | secondary | -2.08e-04 | -6.90e-02 |
| Fuel Oil #4 Prod. | PM | secondary | -4.35e-04 | -1.44e-01 |
| CRT Incineration | PM | secondary | -1.83e-02 | -6.09e+00 |
| **Total End-of-life** | | | **-1.88e-02** | **-6.23e+00** |
| **Total All Life-cycle Stages** | | | **3.01e-01** | **1.00e+02** |

## Table M-22. LCD LCIA Results for the Air Particulates Impact Category

| Process Group | Materials | LCI Data Type | Air Particulates (kg) | % of Total |
|---|---|---|---|---|
| **Materials Processing Life-cycle Stage** | | | | |
| Steel Prod., cold-rolled, semi-finished | PM | secondary | 5.14e-02 | 4.48e+01 |
| Natural Gas Prod. | PM | secondary | 2.89e-02 | 2.52e+01 |
| Polycarbonate Production | PM | secondary | 3.61e-03 | 3.15e+00 |
| Aluminum Prod. | PM | secondary | 3.31e-03 | 2.89e+00 |
| PMMA Sheet Prod. | PM | secondary | 3.22e-03 | 2.81e+00 |
| PET Resin Production | PM | secondary | 6.99e-04 | 6.10e-01 |
| Styrene-butadiene Copolymer Prod. | PM | secondary | 4.34e-04 | 3.79e-01 |
| Natural Gas Prod. | PM-10 | secondary | 3.45e-07 | 3.01e-04 |
| **Total Materials Processing** | | | **9.16e-02** | **7.99e+01** |
| **Manufacturing Life-cycle Stage** | | | | |
| Japanese Electric Grid | PM-10 | model/secondary | 6.72e-03 | 5.87e+00 |
| LPG Production | PM | secondary | 6.19e-03 | 5.40e+00 |
| Natural Gas Prod. | PM | secondary | 6.53e-04 | 5.69e-01 |
| US electric grid | PM-10 | model/secondary | 1.12e-04 | 9.76e-02 |
| Fuel Oil #4 Prod. | PM | secondary | 6.24e-05 | 5.44e-02 |
| Fuel Oil #6 Prod. | PM | secondary | 3.15e-05 | 2.75e-02 |
| Panel components | PM | primary | 2.74e-05 | 2.39e-02 |
| Fuel Oil #2 Prod. | PM | secondary | 1.85e-05 | 1.61e-02 |
| Monitor/module | PM | primary | 1.10e-05 | 9.58e-03 |
| LPG Production | PM-10 | secondary | 1.08e-05 | 9.42e-03 |
| LCD glass mfg. | PM | primary | 5.06e-06 | 4.41e-03 |
| Fuel Oil #4 Prod. | PM-10 | secondary | 1.34e-07 | 1.17e-04 |
| Fuel Oil #6 Prod. | PM-10 | secondary | 7.94e-08 | 6.92e-05 |
| Fuel Oil #2 Prod. | PM-10 | secondary | 3.47e-08 | 3.02e-05 |
| Natural Gas Prod. | PM-10 | secondary | 7.79e-09 | 6.79e-06 |
| **Total Manufacturing** | | | **1.38e-02** | **1.21e+01** |
| **Use, Maintenance and Repair Life-cycle Stage** | | | | |
| US electric grid | PM-10 | model/secondary | 2.16e-02 | 1.88e+01 |
| **Total Use, Maintenance and Repair** | | | **2.16e-02** | **1.88e+01** |
| **End-of-life Life-cycle Stage** | | | | |
| LCD landfilling | PM | primary | 5.02e-05 | 4.38e-02 |
| US electric grid | PM-10 | model/secondary | 4.09e-06 | 3.57e-03 |
| LPG Production | PM | secondary | 5.08e-07 | 4.43e-04 |
| Natural Gas Prod. | PM-10 | secondary | -1.63e-09 | -1.43e-06 |
| LCD incineration | PM-10 | secondary | -4.08e-08 | -3.56e-05 |
| Fuel Oil #4 Prod. | PM-10 | secondary | -6.18e-07 | -5.39e-04 |
| Natural Gas Prod. | PM | secondary | -1.37e-04 | -1.20e-01 |
| Fuel Oil #4 Prod. | PM | secondary | -2.87e-04 | -2.51e-01 |
| LCD incineration | PM | secondary | -1.20e-02 | -1.05e+01 |
| **Total End-of-life** | | | **-1.24e-02** | **-1.08e+01** |
| **Total All Life-cycle Stages** | | | **1.15e-01** | **1.00e+02** |

## Table M-23. CRT LCIA Results for the Water Eutrophication Impact Category

| Process Group | Material | LCI Data Type | Water Eutrophication (kg Phosphate Equivalents) | % of Total |
|---|---|---|---|---|
| **Materials Processing Life-cycle Stage** | | | | |
| Steel Prod., cold-rolled, semi-finished | Other nitrogen | secondary | 1.80e-04 | 3.73e-01 |
| Steel Prod., cold-rolled, semi-finished | COD | secondary | 1.61e-04 | 3.34e-01 |
| Aluminum Prod. | Phosphate (PO43-) | secondary | 9.44e-05 | 1.96e-01 |
| Polycarbonate Production | Phosphate (PO43-) | secondary | 4.84e-05 | 1.00e-01 |
| ABS Production | Ammonia | secondary | 3.70e-05 | 7.67e-02 |
| Lead | Phosphate (PO43-) | secondary | 2.79e-05 | 5.79e-02 |
| ABS Production | COD | secondary | 2.05e-05 | 4.25e-02 |
| Polycarbonate Production | COD | secondary | 2.03e-05 | 4.22e-02 |
| ABS Production | Other nitrogen | secondary | 1.78e-05 | 3.69e-02 |
| Steel Prod., cold-rolled, semi-finished | Ammonia | secondary | 1.68e-05 | 3.48e-02 |
| Aluminum Prod. | Other nitrogen | secondary | 1.23e-05 | 2.56e-02 |
| Steel Prod., cold-rolled, semi-finished | Phosphorus (yellow or white) | secondary | 1.20e-05 | 2.48e-02 |
| Aluminum Prod. | Nitrogen | secondary | 1.10e-05 | 2.28e-02 |
| Invar | Other nitrogen | secondary | 5.96e-06 | 1.24e-02 |
| Invar | COD | secondary | 5.80e-06 | 1.20e-02 |
| Ferrite mfg. | COD | secondary | 5.66e-06 | 1.18e-02 |
| Invar | Ammonia | secondary | 4.91e-06 | 1.02e-02 |
| Aluminum Prod. | Nitrate | secondary | 4.56e-06 | 9.47e-03 |
| Styrene-butadiene Copolymer Prod. | COD | secondary | 4.10e-06 | 8.50e-03 |
| Lead | Nitrogen | secondary | 3.77e-06 | 7.83e-03 |
| Polycarbonate Production | Nitrogen | secondary | 3.49e-06 | 7.24e-03 |
| Lead | Other nitrogen | secondary | 3.06e-06 | 6.36e-03 |
| Ferrite mfg. | Phosphate (PO43-) | secondary | 3.04e-06 | 6.31e-03 |
| ABS Production | Nitrate | secondary | 3.01e-06 | 6.24e-03 |
| Styrene-butadiene Copolymer Prod. | Other nitrogen | secondary | 1.74e-06 | 3.61e-03 |
| Invar | Nitrates/nitrites | secondary | 1.62e-06 | 3.37e-03 |
| Ferrite mfg. | Ammonia | secondary | 1.58e-06 | 3.29e-03 |
| Steel Prod., cold-rolled, semi-finished | Phosphate (PO43-) | secondary | 1.44e-06 | 2.98e-03 |
| Ferrite mfg. | Other nitrogen | secondary | 1.27e-06 | 2.65e-03 |
| Polystyrene Prod., high-impact | COD | secondary | 1.20e-06 | 2.48e-03 |
| Aluminum Prod. | COD | secondary | 1.18e-06 | 2.44e-03 |
| Styrene-butadiene Copolymer Prod. | Ammonia ions | secondary | 1.17e-06 | 2.42e-03 |
| Lead | Nitrate | secondary | 9.00e-07 | 1.87e-03 |
| Polycarbonate Production | Ammonia | secondary | 7.11e-07 | 1.48e-03 |
| Steel Prod., cold-rolled, semi-finished | Nitrates/nitrites | secondary | 6.71e-07 | 1.39e-03 |
| Polystyrene Prod., high-impact | Nitrogen | secondary | 5.08e-07 | 1.05e-03 |
| Ferrite mfg. | Nitrate | secondary | 4.04e-07 | 8.38e-04 |
| Polystyrene Prod., high-impact | Ammonia | secondary | 3.10e-07 | 6.44e-04 |
| Lead | COD | secondary | 2.92e-07 | 6.07e-04 |
| Styrene-butadiene Copolymer Prod. | Nitrate | secondary | 2.90e-07 | 6.01e-04 |
| Ferrite mfg. | Phosphorus (yellow or white) | secondary | 5.76e-08 | 1.20e-04 |
| Invar | Phosphorus (yellow or white) | secondary | 4.85e-08 | 1.01e-04 |
| ABS Production | Phosphate (PO43-) | secondary | 4.62e-08 | 9.59e-05 |
| Polycarbonate Production | Nitrate | secondary | 4.62e-08 | 9.58e-05 |
| Polystyrene Prod., high-impact | Nitrate | secondary | 3.02e-08 | 6.27e-05 |
| **Total Materials Processing** | | | **7.22e-04** | **1.50e+00** |
| **Manufacturing Life-cycle Stage** | | | | |

## Table M-23. CRT LCIA Results for the Water Eutrophication Impact Category

| Process Group | Material | LCI Data Type | Water Eutrophication (kg Phosphate Equivalents) | % of Total |
|---|---|---|---|---|
| LPG Production | COD | secondary | 3.49e-02 | 7.24e+01 |
| LPG Production | Ammonia ions | secondary | 9.04e-03 | 1.88e+01 |
| CRT tube mfg. | Nitrogen | primary | 3.02e-03 | 6.26e+00 |
| CRT tube mfg. | COD | primary | 1.59e-04 | 3.30e-01 |
| CRT tube mfg. | Phosphorus (yellow or white) | primary | 1.54e-04 | 3.21e-01 |
| Fuel Oil #6 Prod. | COD | secondary | 1.18e-04 | 2.45e-01 |
| Fuel Oil #2 Prod. | COD | secondary | 9.79e-05 | 2.03e-01 |
| Fuel Oil #6 Prod. | Ammonia ions | secondary | 3.01e-05 | 6.24e-02 |
| Fuel Oil #2 Prod. | Ammonia ions | secondary | 2.51e-05 | 5.21e-02 |
| Fuel Oil #4 Prod. | COD | secondary | 7.96e-06 | 1.65e-02 |
| LPG Production | Nitrate | secondary | 6.06e-06 | 1.26e-02 |
| Fuel Oil #4 Prod. | Ammonia ions | secondary | 2.04e-06 | 4.23e-03 |
| CRT tube mfg. | Phosphate as P2O5 | primary | 1.62e-06 | 3.36e-03 |
| Natural Gas Prod. | COD | secondary | 7.15e-07 | 1.49e-03 |
| Glass/frit | Nitrates/nitrites | primary | 3.95e-07 | 8.21e-04 |
| Glass/frit | COD | primary | 1.81e-07 | 3.75e-04 |
| Natural Gas Prod. | Ammonia ions | secondary | 1.11e-07 | 2.30e-04 |
| Fuel Oil #6 Prod. | Nitrate | secondary | 2.43e-08 | 5.04e-05 |
| Fuel Oil #2 Prod. | Nitrate | secondary | 1.73e-08 | 3.58e-05 |
| LPG Production | Other nitrogen | secondary | 6.62e-09 | 1.37e-05 |
| Natural Gas Prod. | Nitrate | secondary | 1.50e-09 | 3.12e-06 |
| Fuel Oil #4 Prod. | Nitrate | secondary | 1.47e-09 | 3.05e-06 |
| Fuel Oil #6 Prod. | Other nitrogen | secondary | 2.24e-11 | 4.65e-08 |
| Fuel Oil #2 Prod. | Other nitrogen | secondary | 1.86e-11 | 3.85e-08 |
| Fuel Oil #4 Prod. | Other nitrogen | secondary | 1.51e-12 | 3.13e-09 |
| Natural Gas Prod. | Other nitrogen | secondary | 1.34e-13 | 2.78e-10 |
| **Total Manufacturing** | | | **4.76e-02** | **9.87e+01** |
| **Use, Maintenance and Repair Life-cycle Stage** | | | | |
| **Total Use, Maintenance and Repair** | | | **0.00e+00** | **0.00e+00** |
| **End-of-life Life-cycle Stage** | | | | |
| CRT landfilling | COD | primary | 2.13e-06 | 4.43e-03 |
| CRT landfilling | Ammonia | primary | 4.62e-07 | 9.59e-04 |
| LPG Production | COD | secondary | 3.01e-07 | 6.25e-04 |
| LPG Production | Ammonia ions | secondary | 7.80e-08 | 1.62e-04 |
| LPG Production | Nitrate | secondary | 5.23e-11 | 1.09e-07 |
| LPG Production | Other nitrogen | secondary | 5.71e-14 | 1.19e-10 |
| Natural Gas Prod. | Other nitrogen | secondary | -6.71e-14 | -1.39e-10 |
| CRT Incineration | Other nitrogen | secondary | -1.04e-12 | -2.16e-09 |
| Fuel Oil #4 Prod. | Other nitrogen | secondary | -1.62e-11 | -3.37e-08 |
| Natural Gas Prod. | Nitrate | secondary | -7.54e-10 | -1.57e-06 |
| Fuel Oil #4 Prod. | Nitrate | secondary | -1.58e-08 | -3.27e-05 |
| Natural Gas Prod. | Ammonia ions | secondary | -5.56e-08 | -1.15e-04 |
| CRT Incineration | Nitrate | secondary | -1.80e-07 | -3.73e-04 |
| Natural Gas Prod. | COD | secondary | -3.59e-07 | -7.45e-04 |
| CRT Incineration | Ammonia | secondary | -1.80e-06 | -3.74e-03 |
| CRT Incineration | COD | secondary | -3.21e-06 | -6.65e-03 |
| Fuel Oil #4 Prod. | Ammonia ions | secondary | -2.19e-05 | -4.55e-02 |

## Table M-23. CRT LCIA Results for the Water Eutrophication Impact Category

| Process Group | Material | LCI Data Type | Water Eutrophication (kg Phosphate Equivalents) | % of Total |
|---|---|---|---|---|
| Fuel Oil #4 Prod. | COD | secondary | -8.56e-05 | -1.78e-01 |
| **Total End-of-life** | | | **-1.10e-04** | **-2.29e-01** |
| **Total All Manufacturing Stages** | | | **4.82e-02** | **1.00e+02** |

## Table M-24. LCD LCIA Results for the Water Eutrophication Impact Category

| Process Group | Material | LCI Data Type | Water Eutrophication (kg Phosphate Equivalents) | % of Total |
|---|---|---|---|---|
| **Materials Processing Life-cycle Stage** | | | | |
| PMMA Sheet Prod. | Ammonia | secondary | 1.97e-04 | 3.97e-01 |
| Steel Prod., cold-rolled, semi-finished | Other nitrogen | secondary | 8.81e-05 | 1.78e-01 |
| Steel Prod., cold-rolled, semi-finished | COD | secondary | 7.89e-05 | 1.59e-01 |
| Natural Gas Prod. | COD | secondary | 5.00e-05 | 1.01e-01 |
| PMMA Sheet Prod. | Phosphate (PO43-) | secondary | 4.86e-05 | 9.80e-02 |
| Aluminum Prod. | Phosphate (PO43-) | secondary | 3.51e-05 | 7.09e-02 |
| Polycarbonate Production | Phosphate (PO43-) | secondary | 2.70e-05 | 5.45e-02 |
| PMMA Sheet Prod. | COD | secondary | 2.19e-05 | 4.43e-02 |
| Polycarbonate Production | COD | secondary | 1.13e-05 | 2.29e-02 |
| Steel Prod., cold-rolled, semi-finished | Ammonia | secondary | 8.21e-06 | 1.66e-02 |
| Natural Gas Prod. | Ammonia ions | secondary | 7.75e-06 | 1.56e-02 |
| PMMA Sheet Prod. | Nitrates/nitrites | secondary | 7.67e-06 | 1.55e-02 |
| Steel Prod., cold-rolled, semi-finished | Phosphorus (yellow or white) | secondary | 5.86e-06 | 1.18e-02 |
| Aluminum Prod. | Other nitrogen | secondary | 4.60e-06 | 9.27e-03 |
| PET Resin Production | COD | secondary | 4.39e-06 | 8.86e-03 |
| Aluminum Prod. | Nitrogen | secondary | 4.09e-06 | 8.25e-03 |
| Polycarbonate Production | Nitrogen | secondary | 1.95e-06 | 3.93e-03 |
| Styrene-butadiene Copolymer Prod. | COD | secondary | 1.79e-06 | 3.61e-03 |
| Aluminum Prod. | Nitrate | secondary | 1.70e-06 | 3.43e-03 |
| PMMA Sheet Prod. | Other nitrogen | secondary | 9.66e-07 | 1.95e-03 |
| Styrene-butadiene Copolymer Prod. | Other nitrogen | secondary | 7.60e-07 | 1.53e-03 |
| Steel Prod., cold-rolled, semi-finished | Phosphate (PO43-) | secondary | 7.03e-07 | 1.42e-03 |
| Styrene-butadiene Copolymer Prod. | Ammonia ions | secondary | 5.11e-07 | 1.03e-03 |
| Aluminum Prod. | COD | secondary | 4.38e-07 | 8.83e-04 |
| Polycarbonate Production | Ammonia | secondary | 3.97e-07 | 8.01e-04 |
| Steel Prod., cold-rolled, semi-finished | Nitrates/nitrites | secondary | 3.29e-07 | 6.63e-04 |
| Styrene-butadiene Copolymer Prod. | Nitrate | secondary | 1.27e-07 | 2.55e-04 |
| Natural Gas Prod. | Nitrate | secondary | 1.05e-07 | 2.12e-04 |
| PET Resin Production | Other nitrogen | secondary | 3.81e-08 | 7.69e-05 |
| Polycarbonate Production | Nitrate | secondary | 2.58e-08 | 5.20e-05 |
| PET Resin Production | Ammonia ions | secondary | 2.33e-08 | 4.70e-05 |
| PET Resin Production | Nitrate | secondary | 9.08e-09 | 1.83e-05 |
| Natural Gas Prod. | Other nitrogen | secondary | 9.34e-12 | 1.88e-08 |
| **Total Materials Processing** | | | **6.10e-04** | **1.23e+00** |
| **Manufacturing Life-cycle Stage** | | | | |
| Monitor/module | Nitrogen | primary | 3.33e-02 | 6.72e+01 |
| Monitor/module | Phosphorus (yellow or white) | primary | 1.32e-02 | 2.66e+01 |
| LPG Production | COD | secondary | 1.67e-03 | 3.38e+00 |
| LPG Production | Ammonia ions | secondary | 4.34e-04 | 8.75e-01 |
| Panel components | Nitrogen | primary | 2.40e-04 | 4.84e-01 |
| Panel components | Phosphorus (yellow or white) | primary | 7.60e-05 | 1.53e-01 |
| Monitor/module | COD | primary | 5.91e-05 | 1.19e-01 |
| Panel components | COD | primary | 4.86e-05 | 9.81e-02 |
| Fuel Oil #4 Prod. | COD | secondary | 1.23e-05 | 2.47e-02 |
| Fuel Oil #2 Prod. | COD | secondary | 4.57e-06 | 9.22e-03 |
| Fuel Oil #6 Prod. | COD | secondary | 4.02e-06 | 8.11e-03 |
| Fuel Oil #4 Prod. | Ammonia ions | secondary | 3.14e-06 | 6.33e-03 |
| Fuel Oil #2 Prod. | Ammonia ions | secondary | 1.17e-06 | 2.36e-03 |

## Table M-24. LCD LCIA Results for the Water Eutrophication Impact Category

| Process Group | Material | LCI Data Type | Water Eutrophication (kg Phosphate Equivalents) | % of Total |
|---|---|---|---|---|
| Natural Gas Prod. | COD | secondary | 1.13e-06 | 2.28e-03 |
| Fuel Oil #6 Prod. | Ammonia ions | secondary | 1.02e-06 | 2.07e-03 |
| LPG Production | Nitrate | secondary | 2.91e-07 | 5.86e-04 |
| Natural Gas Prod. | Ammonia ions | secondary | 1.75e-07 | 3.53e-04 |
| LCD glass mfg. | Nitrate | primary | 1.83e-08 | 3.70e-05 |
| LCD glass mfg. | COD | primary | 8.36e-09 | 1.69e-05 |
| Natural Gas Prod. | Nitrate | secondary | 2.37e-09 | 4.78e-06 |
| Fuel Oil #4 Prod. | Nitrate | secondary | 2.26e-09 | 4.56e-06 |
| Fuel Oil #6 Prod. | Nitrate | secondary | 8.26e-10 | 1.67e-06 |
| Fuel Oil #2 Prod. | Nitrate | secondary | 8.06e-10 | 1.63e-06 |
| LPG Production | Other nitrogen | secondary | 3.17e-10 | 6.41e-07 |
| Fuel Oil #4 Prod. | Other nitrogen | secondary | 2.33e-12 | 4.69e-09 |
| Fuel Oil #2 Prod. | Other nitrogen | secondary | 8.67e-13 | 1.75e-09 |
| Fuel Oil #6 Prod. | Other nitrogen | secondary | 7.62e-13 | 1.54e-09 |
| Natural Gas Prod. | Other nitrogen | secondary | 2.11e-13 | 4.25e-10 |
| **Total Manufacturing** | | | **4.90e-02** | **9.89e+01** |
| **Use, Maintenance and Repair Life-cycle Stage** | | | | |
| **Total Use, Maintenance and Repair** | | | **0.00e+00** | **0.00e+00** |
| **End-of-life Life-cycle Stage** | | | | |
| LCD landfilling | COD | primary | 5.14e-07 | 1.04e-03 |
| LPG Production | COD | secondary | 1.37e-07 | 2.77e-04 |
| LCD landfilling | Ammonia | primary | 1.11e-07 | 2.25e-04 |
| LPG Production | Ammonia ions | secondary | 3.56e-08 | 7.19e-05 |
| LPG Production | Nitrate | secondary | 2.39e-11 | 4.81e-08 |
| LPG Production | Other nitrogen | secondary | 2.61e-14 | 5.26e-11 |
| Natural Gas Prod. | Other nitrogen | secondary | -4.43e-14 | -8.93e-11 |
| LCD incineration | Other nitrogen | secondary | -6.75e-13 | -1.36e-09 |
| Fuel Oil #4 Prod. | Other nitrogen | secondary | -1.07e-11 | -2.16e-08 |
| Natural Gas Prod. | Nitrate | secondary | -4.98e-10 | -1.00e-06 |
| Fuel Oil #4 Prod. | Nitrate | secondary | -1.04e-08 | -2.10e-05 |
| Natural Gas Prod. | Ammonia ions | secondary | -3.67e-08 | -7.41e-05 |
| LCD incineration | Nitrate | secondary | -1.17e-07 | -2.35e-04 |
| Natural Gas Prod. | COD | secondary | -2.37e-07 | -4.78e-04 |
| LCD incineration | Ammonia | secondary | -1.40e-06 | -2.83e-03 |
| LCD incineration | COD | secondary | -3.16e-06 | -6.38e-03 |
| Fuel Oil #4 Prod. | Ammonia ions | secondary | -1.45e-05 | -2.92e-02 |
| Fuel Oil #4 Prod. | COD | secondary | -5.65e-05 | -1.14e-01 |
| **Total End-of-life** | | | **-7.51e-05** | **-1.52e-01** |
| **Total All Life-cycle Stages** | | | **4.96e-02** | **1.00e+02** |

## Table M-25. CRT LCIA Results for the Water Quality, BOD Impact Category

| Process Group | Material | LCI Data Type | BOD (kg) | % of Total |
|---|---|---|---|---|
| **Materials Processing Life-cycle Stage** | | | | |
| Steel Prod., cold-rolled, semi-finished | BOD | secondary | 2.51e-04 | 1.29e-01 |
| Polycarbonate Production | BOD | secondary | 8.68e-05 | 4.45e-02 |
| Styrene-butadiene Copolymer Prod. | BOD | secondary | 1.65e-05 | 8.48e-03 |
| ABS Production | BOD | secondary | 1.40e-05 | 7.17e-03 |
| Polystyrene Prod., high-impact | BOD | secondary | 6.80e-06 | 3.49e-03 |
| Invar | BOD | secondary | 6.65e-06 | 3.41e-03 |
| Ferrite mfg. | BOD | secondary | 4.74e-06 | 2.43e-03 |
| Aluminum Prod. | BOD | secondary | 4.03e-06 | 2.06e-03 |
| Lead | BOD | secondary | 2.48e-06 | 1.27e-03 |
| **Total Materials Processing** | | | **3.93e-04** | **2.02e-01** |
| **Manufacturing Life-cycle Stage** | | | | |
| LPG Production | BOD | secondary | 1.88e-01 | 9.61e+01 |
| CRT tube mfg. | BOD | primary | 6.39e-03 | 3.28e+00 |
| Fuel Oil #6 Prod. | BOD | secondary | 6.34e-04 | 3.25e-01 |
| Fuel Oil #2 Prod. | BOD | secondary | 5.26e-04 | 2.70e-01 |
| Fuel Oil #4 Prod. | BOD | secondary | 4.28e-05 | 2.19e-02 |
| Glass/frit | BOD | primary | 8.20e-06 | 4.21e-03 |
| Natural Gas Prod. | BOD | secondary | 4.00e-06 | 2.05e-03 |
| **Total Manufacturing** | | | **1.95e-01** | **1.00e+02** |
| **Use, Maintenance and Repair Life-cycle Stage** | | | | |
| **Total Use, Maintenance and Repair** | | | **0.00e+00** | **0.00e+00** |
| **End-of-life Life-cycle Stage** | | | | |
| CRT landfilling | BOD | primary | 1.17e-05 | 5.98e-03 |
| LPG Production | BOD | secondary | 1.62e-06 | 8.30e-04 |
| Natural Gas Prod. | BOD | secondary | -2.01e-06 | -1.03e-03 |
| CRT Incineration | BOD | secondary | -1.70e-05 | -8.74e-03 |
| Fuel Oil #4 Prod. | BOD | secondary | -4.60e-04 | -2.36e-01 |
| **Total End-of-life** | | | **-4.65e-04** | **-2.39e-01** |
| **Total All Life-cycle Stages** | | | **1.95e-01** | **1.00e+02** |

## Table M-26. LCD LCIA Results for the Water Quality, BOD Impact Category

| Process Group | Material | LCI Data Type | BOD (kg) | % of Total |
|---|---|---|---|---|
| **Materials Processing Life-cycle Stage** | | | | |
| Natural Gas Prod. | BOD | secondary | 2.80e-04 | 9.88e-01 |
| PMMA Sheet Prod. | BOD | secondary | 2.30e-04 | 8.12e-01 |
| Steel Prod., cold-rolled, semi-finished | BOD | secondary | 1.23e-04 | 4.34e-01 |
| PET Resin Production | BOD | secondary | 8.17e-05 | 2.88e-01 |
| Polycarbonate Production | BOD | secondary | 4.85e-05 | 1.71e-01 |
| Styrene-butadiene Copolymer Prod. | BOD | secondary | 7.23e-06 | 2.55e-02 |
| Aluminum Prod. | BOD | secondary | 1.50e-06 | 5.29e-03 |
| **Total Materials Processing** | | | **7.72e-04** | **2.72e+00** |
| **Manufacturing Life-cycle Stage** | | | | |
| Monitor/module | BOD | primary | 1.74e-02 | 6.15e+01 |
| LPG Production | BOD | secondary | 9.00e-03 | 3.18e+01 |
| Panel components | BOD | primary | 1.34e-03 | 4.74e+00 |
| Fuel Oil #4 Prod. | BOD | secondary | 6.59e-05 | 2.33e-01 |
| Fuel Oil #2 Prod. | BOD | secondary | 2.46e-05 | 8.67e-02 |
| Fuel Oil #6 Prod. | BOD | secondary | 2.16e-05 | 7.62e-02 |
| Natural Gas Prod. | BOD | secondary | 6.31e-06 | 2.23e-02 |
| LCD glass mfg. | BOD | primary | 3.80e-07 | 1.34e-03 |
| **Total Manufacturing** | | | **2.79e-02** | **9.84e+01** |
| **Use, Maintenance and Repair Life-cycle Stage** | | | | |
| **Total Use, Maintenance and Repair** | | | **0.00e+00** | **0.00e+00** |
| **End-of-life Life-cycle Stage** | | | | |
| LCD landfilling | BOD | primary | 2.81e-06 | 9.91e-03 |
| LPG Production | BOD | secondary | 7.39e-07 | 2.61e-03 |
| Natural Gas Prod. | BOD | secondary | -1.33e-06 | -4.68e-03 |
| LCD incineration | BOD | secondary | -1.70e-05 | -5.99e-02 |
| Fuel Oil #4 Prod. | BOD | secondary | -3.04e-04 | -1.07e+00 |
| **Total End-of-life** | | | **-3.18e-04** | **-1.12e+00** |
| **Total All Life-cycle Stages** | | | **2.83e-02** | **1.00e+02** |

## Table M-27. CRT LCIA Results for the Water Quality, TSS Impact Category

| Process Group | Material | LCI Data Type | Total Suspended Solids (kg) | % of Total |
|---|---|---|---|---|
| **Materials Processing Life-cycle Stage** | | | | |
| Steel Prod., cold-rolled, semi-finished | Suspended solids | secondary | 2.04e-03 | 2.34e-01 |
| Aluminum Prod. | Suspended solids | secondary | 1.74e-03 | 1.99e-01 |
| Polycarbonate Production | Suspended solids | secondary | 1.11e-03 | 1.27e-01 |
| ABS Production | Suspended solids | secondary | 1.02e-03 | 1.16e-01 |
| Invar | Suspended solids | secondary | 8.30e-04 | 9.49e-02 |
| Lead | Suspended solids | secondary | 3.80e-04 | 4.34e-02 |
| Styrene-butadiene Copolymer Prod. | Suspended solids | secondary | 3.06e-04 | 3.50e-02 |
| Ferrite mfg. | Suspended solids | secondary | 2.45e-04 | 2.81e-02 |
| Polystyrene Prod., high-impact | Suspended solids | secondary | 5.14e-05 | 5.88e-03 |
| **Total Materials Processing** | | | **7.72e-03** | **8.83e-01** |
| **Manufacturing Life-cycle Stage** | | | | |
| LPG Production | Suspended solids | secondary | 8.51e-01 | 9.74e+01 |
| Glass/frit | Suspended solids | primary | 7.23e-03 | 8.26e-01 |
| CRT tube mfg. | Suspended solids | primary | 4.63e-03 | 5.30e-01 |
| Fuel Oil #6 Prod. | Suspended solids | secondary | 2.88e-03 | 3.29e-01 |
| Fuel Oil #2 Prod. | Suspended solids | secondary | 2.39e-03 | 2.73e-01 |
| Fuel Oil #4 Prod. | Suspended solids | secondary | 1.94e-04 | 2.22e-02 |
| Japanese Electric Grid | Suspended solids | model/secondary | 2.27e-05 | 2.60e-03 |
| Natural Gas Prod. | Suspended solids | secondary | 1.72e-05 | 1.97e-03 |
| **Total Manufacturing** | | | **8.69e-01** | **9.94e+01** |
| **Use, Maintenance and Repair Life-cycle Stage** | | | | |
| **Total Use, Maintenance and Repair** | | | **0.00e+00** | **0.00e+00** |
| **End-of-life Life-cycle Stage** | | | | |
| CRT landfilling | Suspended solids | primary | 5.52e-05 | 6.31e-03 |
| LPG Production | Suspended solids | secondary | 7.35e-06 | 8.40e-04 |
| Natural Gas Prod. | Suspended solids | secondary | -8.64e-06 | -9.88e-04 |
| CRT Incineration | Suspended solids | secondary | -7.55e-05 | -8.63e-03 |
| Fuel Oil #4 Prod. | Suspended solids | secondary | -2.09e-03 | -2.39e-01 |
| **Total End-of-life** | | | **-2.11e-03** | **-2.41e-01** |
| **Total All Life-cycle Stages** | | | **8.74e-01** | **1.00e+02** |

## Table M-28. LCD LCIA Results for the Water Quality, TSS Impact Category

| Process Group | Material | LCI Data Type | Total Suspended Solids (kg) | % of Total |
|---|---|---|---|---|
| **Materials Processing Life-cycle Stage** | | | | |
| PMMA Sheet Prod. | Suspended solids | secondary | 1.34e-03 | 2.18e+00 |
| Natural Gas Prod. | Suspended solids | secondary | 1.20e-03 | 1.96e+00 |
| Steel Prod., cold-rolled, semi-finished | Suspended solids | secondary | 1.00e-03 | 1.63e+00 |
| Aluminum Prod. | Suspended solids | secondary | 6.48e-04 | 1.05e+00 |
| Polycarbonate Production | Suspended solids | secondary | 6.19e-04 | 1.01e+00 |
| Styrene-butadiene Copolymer Prod. | Suspended solids | secondary | 1.34e-04 | 2.18e-01 |
| PET Resin Production | Suspended solids | secondary | 3.45e-05 | 5.61e-02 |
| **Total Materials Processing** | | | **4.98e-03** | **8.10e+00** |
| **Manufacturing Life-cycle Stage** | | | | |
| LPG Production | Suspended solids | secondary | 4.09e-02 | 6.64e+01 |
| Monitor/module | Suspended solids | primary | 1.55e-02 | 2.52e+01 |
| Panel components | Suspended solids | primary | 6.46e-04 | 1.05e+00 |
| LCD glass mfg. | Suspended solids | primary | 3.35e-04 | 5.44e-01 |
| Fuel Oil #4 Prod. | Suspended solids | secondary | 2.99e-04 | 4.86e-01 |
| Fuel Oil #2 Prod. | Suspended solids | secondary | 1.12e-04 | 1.81e-01 |
| Fuel Oil #6 Prod. | Suspended solids | secondary | 9.81e-05 | 1.59e-01 |
| Japanese Electric Grid | Suspended solids | model/secondary | 7.63e-05 | 1.24e-01 |
| Natural Gas Prod. | Suspended solids | secondary | 2.72e-05 | 4.42e-02 |
| **Total Manufacturing** | | | **5.80e-02** | **9.42e+01** |
| **Use, Maintenance and Repair Life-cycle Stage** | | | | |
| **Total Use, Maintenance and Repair** | | | **0.00e+00** | **0.00e+00** |
| **End-of-life Life-cycle Stage** | | | | |
| LCD landfilling | Suspended solids | primary | 1.33e-05 | 2.16e-02 |
| LPG Production | Suspended solids | secondary | 3.35e-06 | 5.45e-03 |
| Natural Gas Prod. | Suspended solids | secondary | -5.71e-06 | -9.28e-03 |
| LCD incineration | Suspended solids | secondary | -7.69e-05 | -1.25e-01 |
| Fuel Oil #4 Prod. | Suspended solids | secondary | -1.38e-03 | -2.24e+00 |
| **Total End-of-life** | | | **-1.44e-03** | **-2.35e+00** |
| **Total All Life-cycle Stages** | | | **6.15e-02** | **1.00e+02** |

## Table M-29. CRT LCIA Results for the Radioactivity Impact Category

| Process Group | Material | LCI Data Type | Radioactivity (Bq) | % of Total |
|---|---|---|---|---|
| **Materials Processing Life-cycle Stage** | | | | |
| Steel Prod., cold-rolled, semi-finished | Plutonium-241 (isotope) | secondary | 2.40e+07 | 6.23e+01 |
| Invar | Plutonium-241 (isotope) | secondary | 6.80e+06 | 1.77e+01 |
| Ferrite mfg. | Plutonium-241 (isotope) | secondary | 6.64e+06 | 1.72e+01 |
| Steel Prod., cold-rolled, semi-finished | Plutonium-240 (isotope) | secondary | 1.04e+05 | 2.69e-01 |
| Steel Prod., cold-rolled, semi-finished | Cesium-135 (isotope) | secondary | 9.38e+04 | 2.43e-01 |
| Steel Prod., cold-rolled, semi-finished | Radon-222 (isotope) | secondary | 8.77e+04 | 2.28e-01 |
| Steel Prod., cold-rolled, semi-finished | Plutonium-239 (isotope) | secondary | 7.29e+04 | 1.89e-01 |
| Invar | Plutonium-240 (isotope) | secondary | 2.94e+04 | 7.62e-02 |
| Ferrite mfg. | Plutonium-240 (isotope) | secondary | 2.87e+04 | 7.44e-02 |
| Invar | Cesium-135 (isotope) | secondary | 2.65e+04 | 6.89e-02 |
| Ferrite mfg. | Cesium-135 (isotope) | secondary | 2.59e+04 | 6.73e-02 |
| Invar | Radon-222 (isotope) | secondary | 2.48e+04 | 6.45e-02 |
| Ferrite mfg. | Radon-222 (isotope) | secondary | 2.42e+04 | 6.30e-02 |
| Invar | Plutonium-239 (isotope) | secondary | 2.06e+04 | 5.36e-02 |
| Ferrite mfg. | Plutonium-239 (isotope) | secondary | 2.01e+04 | 5.23e-02 |
| Steel Prod., cold-rolled, semi-finished | Strontium-90 (isotope) | secondary | 1.40e+04 | 3.64e-02 |
| Invar | Strontium-90 (isotope) | secondary | 3.97e+03 | 1.03e-02 |
| Ferrite mfg. | Strontium-90 (isotope) | secondary | 3.87e+03 | 1.01e-02 |
| Steel Prod., cold-rolled, semi-finished | Tritium-3 (isotope) | secondary | 2.50e+03 | 6.50e-03 |
| Steel Prod., cold-rolled, semi-finished | radioactive gas (unspecified) | secondary | 1.83e+03 | 4.76e-03 |
| Steel Prod., cold-rolled, semi-finished | Xenon-133 (isotope) | secondary | 1.56e+03 | 4.04e-03 |
| Ferrite mfg. | Radioactive substance (unspecified) | secondary | 8.77e+02 | 2.28e-03 |
| Steel Prod., cold-rolled, semi-finished | Radium-226 (isotope) | secondary | 8.66e+02 | 2.25e-03 |
| Invar | Tritium-3 (isotope) | secondary | 7.09e+02 | 1.84e-03 |
| Ferrite mfg. | Tritium-3 (isotope) | secondary | 6.92e+02 | 1.80e-03 |
| Invar | radioactive gas (unspecified) | secondary | 5.19e+02 | 1.35e-03 |
| Steel Prod., cold-rolled, semi-finished | Thorium-230 (isotope) | secondary | 5.15e+02 | 1.34e-03 |
| Ferrite mfg. | radioactive gas (unspecified) | secondary | 5.07e+02 | 1.32e-03 |
| Invar | Xenon-133 (isotope) | secondary | 4.41e+02 | 1.15e-03 |
| Ferrite mfg. | Xenon-133 (isotope) | secondary | 4.30e+02 | 1.12e-03 |
| Steel Prod., cold-rolled, semi-finished | Plutonium-242 (isotope) | secondary | 3.91e+02 | 1.02e-03 |
| Steel Prod., cold-rolled, semi-finished | Curium-244 (isotope) | secondary | 3.90e+02 | 1.01e-03 |
| Steel Prod., cold-rolled, semi-finished | Uranium-234 (isotope) | secondary | 3.15e+02 | 8.19e-04 |
| Ferrite mfg. | Radium-226 (isotope) | secondary | 2.39e+02 | 6.21e-04 |
| Steel Prod., cold-rolled, semi-finished | Americium-241 (isotope) | secondary | 1.92e+02 | 4.99e-04 |
| Ferrite mfg. | Thorium-230 (isotope) | secondary | 1.42e+02 | 3.70e-04 |
| Steel Prod., cold-rolled, semi-finished | Krypton-85 (isotope) | secondary | 1.11e+02 | 2.89e-04 |
| Invar | Plutonium-242 (isotope) | secondary | 1.11e+02 | 2.88e-04 |
| Invar | Curium-244 (isotope) | secondary | 1.10e+02 | 2.87e-04 |
| Ferrite mfg. | Plutonium-242 (isotope) | secondary | 1.08e+02 | 2.81e-04 |
| Ferrite mfg. | Curium-244 (isotope) | secondary | 1.08e+02 | 2.80e-04 |
| Invar | Radium-226 (isotope) | secondary | 1.04e+02 | 2.71e-04 |
| Steel Prod., cold-rolled, semi-finished | Uranium-238 (isotope) | secondary | 9.28e+01 | 2.41e-04 |
| Invar | Uranium-234 (isotope) | secondary | 8.74e+01 | 2.27e-04 |
| Ferrite mfg. | Uranium-234 (isotope) | secondary | 8.72e+01 | 2.26e-04 |
| Steel Prod., cold-rolled, semi-finished | Samarium-151 (isotope) | secondary | 8.67e+01 | 2.25e-04 |
| Steel Prod., cold-rolled, semi-finished | Neptunium-237 (isotope) | secondary | 6.02e+01 | 1.56e-04 |
| Invar | Americium-241 (isotope) | secondary | 5.44e+01 | 1.41e-04 |
| Ferrite mfg. | Americium-241 (isotope) | secondary | 5.31e+01 | 1.38e-04 |
| Invar | Krypton-85 (isotope) | secondary | 3.15e+01 | 8.18e-05 |

## Table M-29. CRT LCIA Results for the Radioactivity Impact Category

| Process Group | Material | LCI Data Type | Radioactivity (Bq) | % of Total |
|---|---|---|---|---|
| Ferrite mfg. | Krypton-85 (isotope) | secondary | 3.07e+01 | 7.99e-05 |
| Ferrite mfg. | Uranium-238 (isotope) | secondary | 2.56e+01 | 6.66e-05 |
| Invar | Samarium-151 (isotope) | secondary | 2.45e+01 | 6.37e-05 |
| Invar | Uranium-238 (isotope) | secondary | 2.45e+01 | 6.35e-05 |
| Ferrite mfg. | Samarium-151 (isotope) | secondary | 2.40e+01 | 6.22e-05 |
| Steel Prod., cold-rolled, semi-finished | Carbon-14 (isotope) | secondary | 1.91e+01 | 4.95e-05 |
| Invar | Neptunium-237 (isotope) | secondary | 1.71e+01 | 4.43e-05 |
| Ferrite mfg. | Neptunium-237 (isotope) | secondary | 1.66e+01 | 4.32e-05 |
| Invar | Radioactive substance (unspecified) | secondary | 8.13e+00 | 2.11e-05 |
| Steel Prod., cold-rolled, semi-finished | Radium-222 (isotope) | secondary | 6.66e+00 | 1.73e-05 |
| Steel Prod., cold-rolled, semi-finished | Uranium-235 (isotope) | secondary | 5.85e+00 | 1.52e-05 |
| Invar | Carbon-14 (isotope) | secondary | 5.40e+00 | 1.40e-05 |
| Ferrite mfg. | Carbon-14 (isotope) | secondary | 5.27e+00 | 1.37e-05 |
| Invar | Thorium-230 (isotope) | secondary | 5.10e+00 | 1.33e-05 |
| Steel Prod., cold-rolled, semi-finished | Americium-243 (isotope) | secondary | 4.19e+00 | 1.09e-05 |
| Steel Prod., cold-rolled, semi-finished | Technetium-99M (isotope) | secondary | 2.86e+00 | 7.43e-06 |
| Steel Prod., cold-rolled, semi-finished | Thorium-228 (isotope) | secondary | 2.49e+00 | 6.48e-06 |
| Steel Prod., cold-rolled, semi-finished | Radon-220 (isotope) | secondary | 2.03e+00 | 5.26e-06 |
| Invar | Radium-222 (isotope) | secondary | 1.91e+00 | 4.95e-06 |
| Ferrite mfg. | Radium-222 (isotope) | secondary | 1.86e+00 | 4.83e-06 |
| Invar | Uranium-234 (isotope) | secondary | 1.86e+00 | 4.83e-06 |
| Invar | Uranium-238 (isotope) | secondary | 1.80e+00 | 4.67e-06 |
| Ferrite mfg. | Uranium-235 (isotope) | secondary | 1.62e+00 | 4.20e-06 |
| Invar | Uranium-235 (isotope) | secondary | 1.58e+00 | 4.10e-06 |
| Steel Prod., cold-rolled, semi-finished | Radium-228 (isotope) | secondary | 1.30e+00 | 3.37e-06 |
| Invar | Americium-243 (isotope) | secondary | 1.19e+00 | 3.08e-06 |
| Ferrite mfg. | Americium-243 (isotope) | secondary | 1.16e+00 | 3.00e-06 |
| Steel Prod., cold-rolled, semi-finished | Polonium-210 (isotope) | secondary | 1.13e+00 | 2.92e-06 |
| Invar | Technetium-99M (isotope) | secondary | 8.10e-01 | 2.10e-06 |
| Ferrite mfg. | Technetium-99M (isotope) | secondary | 7.91e-01 | 2.05e-06 |
| Invar | Thorium-228 (isotope) | secondary | 7.52e-01 | 1.95e-06 |
| Ferrite mfg. | Thorium-228 (isotope) | secondary | 7.34e-01 | 1.91e-06 |
| Steel Prod., cold-rolled, semi-finished | Lead-210 (isotope) | secondary | 6.54e-01 | 1.70e-06 |
| Steel Prod., cold-rolled, semi-finished | Radium-224 (isotope) | secondary | 6.05e-01 | 1.57e-06 |
| Invar | Radon-220 (isotope) | secondary | 5.80e-01 | 1.51e-06 |
| Ferrite mfg. | Radon-220 (isotope) | secondary | 5.66e-01 | 1.47e-06 |
| Invar | Radium-228 (isotope) | secondary | 3.90e-01 | 1.01e-06 |
| Ferrite mfg. | Radium-228 (isotope) | secondary | 3.81e-01 | 9.89e-07 |
| Steel Prod., cold-rolled, semi-finished | Zirconium-93 (isotope) | secondary | 3.76e-01 | 9.77e-07 |
| Invar | Polonium-210 (isotope) | secondary | 3.21e-01 | 8.35e-07 |
| Steel Prod., cold-rolled, semi-finished | Cesium-137 (isotope) | secondary | 3.19e-01 | 8.27e-07 |
| Ferrite mfg. | Polonium-210 (isotope) | secondary | 3.14e-01 | 8.15e-07 |
| Steel Prod., cold-rolled, semi-finished | Protactinium-234 (isotope) | secondary | 2.01e-01 | 5.23e-07 |
| Steel Prod., cold-rolled, semi-finished | Thorium-234 (isotope) | secondary | 2.01e-01 | 5.23e-07 |
| Steel Prod., cold-rolled, semi-finished | Silver-110M (isotope) | secondary | 1.88e-01 | 4.88e-07 |
| Invar | Lead-210 (isotope) | secondary | 1.87e-01 | 4.85e-07 |
| Invar | Radium-224 (isotope) | secondary | 1.83e-01 | 4.75e-07 |
| Ferrite mfg. | Lead-210 (isotope) | secondary | 1.82e-01 | 4.73e-07 |
| Ferrite mfg. | Radium-224 (isotope) | secondary | 1.78e-01 | 4.63e-07 |
| Steel Prod., cold-rolled, semi-finished | Potassium-40 (isotope) | secondary | 1.75e-01 | 4.54e-07 |
| Invar | Radium-226 (isotope) | secondary | 1.41e-01 | 3.66e-07 |

# Table M-29. CRT LCIA Results for the Radioactivity Impact Category

| Process Group | Material | LCI Data Type | Radioactivity (Bq) | % of Total |
|---|---|---|---|---|
| Invar | Thorium-230 (isotope) | secondary | 1.41e-01 | 3.66e-07 |
| Steel Prod., cold-rolled, semi-finished | Cobalt-58 (isotope) | secondary | 1.26e-01 | 3.27e-07 |
| Steel Prod., cold-rolled, semi-finished | Tin-126 (isotope) | secondary | 1.18e-01 | 3.07e-07 |
| Invar | Zirconium-93 (isotope) | secondary | 1.07e-01 | 2.77e-07 |
| Ferrite mfg. | Zirconium-93 (isotope) | secondary | 1.04e-01 | 2.70e-07 |
| Ferrite mfg. | Cesium-137 (isotope) | secondary | 8.80e-02 | 2.29e-07 |
| Steel Prod., cold-rolled, semi-finished | Cobalt-60 (isotope) | secondary | 7.90e-02 | 2.05e-07 |
| Invar | Uranium-235 (isotope) | secondary | 7.81e-02 | 2.03e-07 |
| Invar | Cesium-137 (isotope) | secondary | 7.42e-02 | 1.93e-07 |
| Steel Prod., cold-rolled, semi-finished | Selenium-79 (isotope) | secondary | 6.76e-02 | 1.75e-07 |
| Steel Prod., cold-rolled, semi-finished | Radioactive aerosols and halogenes (unspecified) | secondary | 5.74e-02 | 1.49e-07 |
| Invar | Protactinium-234 (isotope) | secondary | 5.70e-02 | 1.48e-07 |
| Invar | Thorium-234 (isotope) | secondary | 5.70e-02 | 1.48e-07 |
| Ferrite mfg. | Protactinium-234 (isotope) | secondary | 5.57e-02 | 1.45e-07 |
| Ferrite mfg. | Thorium-234 (isotope) | secondary | 5.57e-02 | 1.45e-07 |
| Invar | Silver-110M (isotope) | secondary | 5.32e-02 | 1.38e-07 |
| Ferrite mfg. | Silver-110M (isotope) | secondary | 5.19e-02 | 1.35e-07 |
| Invar | Potassium-40 (isotope) | secondary | 4.99e-02 | 1.30e-07 |
| Ferrite mfg. | Potassium-40 (isotope) | secondary | 4.87e-02 | 1.27e-07 |
| Steel Prod., cold-rolled, semi-finished | Thorium-232 (isotope) | secondary | 4.65e-02 | 1.21e-07 |
| Steel Prod., cold-rolled, semi-finished | Curium-245 (isotope) | secondary | 4.35e-02 | 1.13e-07 |
| Steel Prod., cold-rolled, semi-finished | Antimony-124 (isotope) | secondary | 4.33e-02 | 1.12e-07 |
| Steel Prod., cold-rolled, semi-finished | Cesium-134 (isotope) | secondary | 3.88e-02 | 1.01e-07 |
| Invar | Cobalt-58 (isotope) | secondary | 3.57e-02 | 9.26e-08 |
| Ferrite mfg. | Cobalt-58 (isotope) | secondary | 3.48e-02 | 9.04e-08 |
| Invar | Tin-126 (isotope) | secondary | 3.35e-02 | 8.69e-08 |
| Ferrite mfg. | Tin-126 (isotope) | secondary | 3.27e-02 | 8.48e-08 |
| Invar | Cobalt-60 (isotope) | secondary | 2.24e-02 | 5.81e-08 |
| Ferrite mfg. | Cobalt-60 (isotope) | secondary | 2.18e-02 | 5.67e-08 |
| Steel Prod., cold-rolled, semi-finished | Palladium-107 (isotope) | secondary | 2.11e-02 | 5.49e-08 |
| Invar | Selenium-79 (isotope) | secondary | 1.91e-02 | 4.97e-08 |
| Ferrite mfg. | Selenium-79 (isotope) | secondary | 1.87e-02 | 4.85e-08 |
| Invar | Radioactive aerosols and halogenes (unspecified) | secondary | 1.63e-02 | 4.22e-08 |
| Invar | Cesium-137 (isotope) | secondary | 1.60e-02 | 4.16e-08 |
| Ferrite mfg. | Radioactive aerosols and halogenes (unspecified) | secondary | 1.59e-02 | 4.12e-08 |
| Invar | Thorium-232 (isotope) | secondary | 1.33e-02 | 3.45e-08 |
| Ferrite mfg. | Thorium-232 (isotope) | secondary | 1.30e-02 | 3.37e-08 |
| Invar | Curium-245 (isotope) | secondary | 1.23e-02 | 3.20e-08 |
| Invar | Antimony-124 (isotope) | secondary | 1.23e-02 | 3.18e-08 |
| Ferrite mfg. | Curium-245 (isotope) | secondary | 1.20e-02 | 3.12e-08 |
| Ferrite mfg. | Antimony-124 (isotope) | secondary | 1.20e-02 | 3.11e-08 |
| Invar | Cesium-134 (isotope) | secondary | 1.10e-02 | 2.85e-08 |
| Ferrite mfg. | Cesium-134 (isotope) | secondary | 1.07e-02 | 2.79e-08 |
| Steel Prod., cold-rolled, semi-finished | Iodine-131 (isotope) | secondary | 9.03e-03 | 2.34e-08 |
| Steel Prod., cold-rolled, semi-finished | Iodine-133 (isotope) | secondary | 8.35e-03 | 2.17e-08 |
| Steel Prod., cold-rolled, semi-finished | Manganese-54 (isotope) | secondary | 6.26e-03 | 1.63e-08 |
| Steel Prod., cold-rolled, semi-finished | Iodine-129 (isotope) | secondary | 6.14e-03 | 1.59e-08 |
| Invar | Palladium-107 (isotope) | secondary | 5.98e-03 | 1.55e-08 |

## Table M-29. CRT LCIA Results for the Radioactivity Impact Category

| Process Group | Material | LCI Data Type | Radioactivity (Bq) | % of Total |
|---|---|---|---|---|
| Ferrite mfg. | Palladium-107 (isotope) | secondary | 5.84e-03 | 1.52e-08 |
| Steel Prod., cold-rolled, semi-finished | Radioactive substance (unspecified) | secondary | 3.20e-03 | 8.31e-09 |
| Invar | Iodine-131 (isotope) | secondary | 2.56e-03 | 6.64e-09 |
| Ferrite mfg. | Iodine-131 (isotope) | secondary | 2.49e-03 | 6.48e-09 |
| Invar | Iodine-133 (isotope) | secondary | 2.36e-03 | 6.14e-09 |
| Ferrite mfg. | Iodine-133 (isotope) | secondary | 2.31e-03 | 5.99e-09 |
| Invar | Manganese-54 (isotope) | secondary | 1.77e-03 | 4.60e-09 |
| Invar | Iodine-129 (isotope) | secondary | 1.74e-03 | 4.52e-09 |
| Ferrite mfg. | Manganese-54 (isotope) | secondary | 1.73e-03 | 4.49e-09 |
| Ferrite mfg. | Iodine-129 (isotope) | secondary | 1.70e-03 | 4.41e-09 |
| **Total Materials Processing** | | | **3.80e+07** | **9.88e+01** |
| **Manufacturing Life-cycle Stage** | | | | 0.00e+00 |
| Japanese Electric Grid | Xenon-133M (isotope) | model/secondary | 1.96e+04 | 5.08e-02 |
| US electric grid | Xenon-133 (isotope) | model/secondary | 4.98e+03 | 1.29e-02 |
| Japanese Electric Grid | Tritium-3 (isotope) | model/secondary | 2.35e+03 | 6.10e-03 |
| Japanese Electric Grid | Krypton-85 (isotope) | model/secondary | 1.66e+03 | 4.32e-03 |
| Japanese Electric Grid | Xenon-133 (isotope) | model/secondary | 1.30e+03 | 3.38e-03 |
| Japanese Electric Grid | Argon-41 (isotope) | model/secondary | 1.00e+03 | 2.60e-03 |
| LPG Production | Radioactive substance (unspecified) | secondary | 9.21e+02 | 2.39e-03 |
| Japanese Electric Grid | Xenon-135 (isotope) | model/secondary | 7.39e+02 | 1.92e-03 |
| US electric grid | Tritium-3 (isotope) | model/secondary | 5.98e+02 | 1.55e-03 |
| US electric grid | Krypton-85 (isotope) | model/secondary | 4.23e+02 | 1.10e-03 |
| US electric grid | Xenon-133M (isotope) | model/secondary | 3.31e+02 | 8.59e-04 |
| US electric grid | Argon-41 (isotope) | model/secondary | 2.55e+02 | 6.62e-04 |
| US electric grid | Xenon-135 (isotope) | model/secondary | 1.88e+02 | 4.88e-04 |
| Japanese Electric Grid | Krypton-88 (isotope) | model/secondary | 1.41e+02 | 3.65e-04 |
| Japanese Electric Grid | Xenon-131M (isotope) | model/secondary | 1.36e+02 | 3.52e-04 |
| Japanese Electric Grid | Krypton-85M (isotope) | model/secondary | 8.06e+01 | 2.09e-04 |
| Japanese Electric Grid | Iodine-133 (isotope) | model/secondary | 7.03e+01 | 1.83e-04 |
| US electric grid | Cobalt-58 (isotope) | model/secondary | 5.49e+01 | 1.42e-04 |
| Japanese Electric Grid | Xenon-138 (isotope) | model/secondary | 4.68e+01 | 1.21e-04 |
| US electric grid | Krypton-88 (isotope) | model/secondary | 3.58e+01 | 9.29e-05 |
| US electric grid | Xenon-131M (isotope) | model/secondary | 3.45e+01 | 8.95e-05 |
| Japanese Electric Grid | Krypton-87 (isotope) | model/secondary | 3.00e+01 | 7.79e-05 |
| US electric grid | Krypton-85M (isotope) | model/secondary | 2.05e+01 | 5.32e-05 |
| US electric grid | Iodine-133 (isotope) | model/secondary | 1.79e+01 | 4.65e-05 |
| Japanese Electric Grid | Xenon-135M (isotope) | model/secondary | 1.41e+01 | 3.66e-05 |
| US electric grid | Xenon-138 (isotope) | model/secondary | 1.19e+01 | 3.09e-05 |
| US electric grid | Krypton-87 (isotope) | model/secondary | 7.62e+00 | 1.98e-05 |
| US electric grid | Xenon-135M (isotope) | model/secondary | 3.59e+00 | 9.32e-06 |
| Fuel Oil #6 Prod. | Radioactive substance (unspecified) | secondary | 3.12e+00 | 8.09e-06 |
| Fuel Oil #2 Prod. | Radioactive substance (unspecified) | secondary | 2.59e+00 | 6.71e-06 |
| Japanese Electric Grid | Rubidium-88 (isotope) | model/secondary | 3.29e-01 | 8.55e-07 |
| Fuel Oil #4 Prod. | Radioactive substance (unspecified) | secondary | 2.10e-01 | 5.46e-07 |
| US electric grid | Rubidium-88 (isotope) | model/secondary | 8.37e-02 | 2.17e-07 |
| Japanese Electric Grid | Iodine-134 (isotope) | model/secondary | 7.98e-02 | 2.07e-07 |
| Japanese Electric Grid | Iodine-131 (isotope) | model/secondary | 7.58e-02 | 1.97e-07 |
| Japanese Electric Grid | Chromium-51 (isotope) | model/secondary | 6.29e-02 | 1.63e-07 |
| Japanese Electric Grid | Cesium-137 (isotope) | model/secondary | 2.40e-02 | 6.24e-08 |
| US electric grid | Iodine-134 (isotope) | model/secondary | 2.03e-02 | 5.27e-08 |
| US electric grid | Iodine-131 (isotope) | model/secondary | 1.93e-02 | 5.01e-08 |

## Table M-29. CRT LCIA Results for the Radioactivity Impact Category

| Process Group | Material | LCI Data Type | Radioactivity (Bq) | % of Total |
|---|---|---|---|---|
| Natural Gas Prod. | Radioactive substance (unspecified) | secondary | 1.86e-02 | 4.84e-08 |
| Japanese Electric Grid | Cobalt-60 (isotope) | model/secondary | 1.62e-02 | 4.21e-08 |
| US electric grid | Chromium-51 (isotope) | model/secondary | 1.60e-02 | 4.15e-08 |
| Japanese Electric Grid | Iodine-132 (isotope) | model/secondary | 1.54e-02 | 4.00e-08 |
| US electric grid | Cesium-137 (isotope) | model/secondary | 6.11e-03 | 1.59e-08 |
| US electric grid | Cobalt-60 (isotope) | model/secondary | 4.13e-03 | 1.07e-08 |
| Japanese Electric Grid | Iodine-135 (isotope) | model/secondary | 4.01e-03 | 1.04e-08 |
| US electric grid | Iodine-132 (isotope) | model/secondary | 3.92e-03 | 1.02e-08 |
| Japanese Electric Grid | Cesium-134 (isotope) | model/secondary | 3.18e-03 | 8.27e-09 |
| Japanese Electric Grid | Cobalt-58 (isotope) | model/secondary | 2.16e-03 | 5.60e-09 |
| US electric grid | Iodine-135 (isotope) | model/secondary | 1.02e-03 | 2.65e-09 |
| Japanese Electric Grid | Manganese-54 (isotope) | model/secondary | 8.92e-04 | 2.32e-09 |
| US electric grid | Cesium-134 (isotope) | model/secondary | 8.09e-04 | 2.10e-09 |
| US electric grid | Manganese-54 (isotope) | model/secondary | 2.27e-04 | 5.89e-10 |
| Japanese Electric Grid | Cobalt-57 (isotope) | model/secondary | 1.69e-04 | 4.39e-10 |
| Japanese Electric Grid | Bromine-89 (isotope) | model/secondary | 1.16e-04 | 3.01e-10 |
| Japanese Electric Grid | Zirconium-95 (isotope) | model/secondary | 9.16e-05 | 2.38e-10 |
| Japanese Electric Grid | Bromine-90 (isotope) | model/secondary | 4.72e-05 | 1.22e-10 |
| US electric grid | Cobalt-57 (isotope) | model/secondary | 4.30e-05 | 1.12e-10 |
| Japanese Electric Grid | Niobium-95 (isotope) | model/secondary | 3.54e-05 | 9.20e-11 |
| US electric grid | Bromine-89 (isotope) | model/secondary | 2.95e-05 | 7.66e-11 |
| US electric grid | Zirconium-95 (isotope) | model/secondary | 2.33e-05 | 6.05e-11 |
| US electric grid | Bromine-90 (isotope) | model/secondary | 1.20e-05 | 3.11e-11 |
| US electric grid | Niobium-95 (isotope) | model/secondary | 9.01e-06 | 2.34e-11 |
| Japanese Electric Grid | Technetium-99M (isotope) | model/secondary | 4.75e-06 | 1.23e-11 |
| US electric grid | Technetium-99M (isotope) | model/secondary | 1.21e-06 | 3.14e-12 |
| Japanese Electric Grid | Silver-110M (isotope) | model/secondary | 1.06e-06 | 2.75e-12 |
| US electric grid | Silver-110M (isotope) | model/secondary | 2.69e-07 | 6.98e-13 |
| **Total Manufacturing** | | | **3.50e+04** | **9.10e-02** |
| **Use, Maintenance and Repair Life-cycle Stage** | | | | |
| US electric grid | Xenon-133 (isotope) | model/secondary | 3.12e+05 | 8.10e-01 |
| US electric grid | Tritium-3 (isotope) | model/secondary | 3.74e+04 | 9.72e-02 |
| US electric grid | Krypton-85 (isotope) | model/secondary | 2.65e+04 | 6.88e-02 |
| US electric grid | Xenon-133M (isotope) | model/secondary | 2.07e+04 | 5.38e-02 |
| US electric grid | Argon-41 (isotope) | model/secondary | 1.60e+04 | 4.15e-02 |
| US electric grid | Xenon-135 (isotope) | model/secondary | 1.18e+04 | 3.06e-02 |
| US electric grid | Cobalt-58 (isotope) | model/secondary | 3.44e+03 | 8.93e-03 |
| US electric grid | Krypton-88 (isotope) | model/secondary | 2.24e+03 | 5.82e-03 |
| US electric grid | Xenon-131M (isotope) | model/secondary | 2.16e+03 | 5.61e-03 |
| US electric grid | Krypton-85M (isotope) | model/secondary | 1.28e+03 | 3.33e-03 |
| US electric grid | Iodine-133 (isotope) | model/secondary | 1.12e+03 | 2.91e-03 |
| US electric grid | Xenon-138 (isotope) | model/secondary | 7.45e+02 | 1.93e-03 |
| US electric grid | Krypton-87 (isotope) | model/secondary | 4.78e+02 | 1.24e-03 |
| US electric grid | Xenon-135M (isotope) | model/secondary | 2.25e+02 | 5.84e-04 |
| US electric grid | Rubidium-88 (isotope) | model/secondary | 5.25e+00 | 1.36e-05 |
| US electric grid | Iodine-134 (isotope) | model/secondary | 1.27e+00 | 3.30e-06 |
| US electric grid | Iodine-131 (isotope) | model/secondary | 1.21e+00 | 3.14e-06 |
| US electric grid | Chromium-51 (isotope) | model/secondary | 1.00e+00 | 2.60e-06 |
| US electric grid | Cesium-137 (isotope) | model/secondary | 3.83e-01 | 9.93e-07 |
| US electric grid | Cobalt-60 (isotope) | model/secondary | 2.59e-01 | 6.72e-07 |

## Table M-29. CRT LCIA Results for the Radioactivity Impact Category

| Process Group | Material | LCI Data Type | Radioactivity (Bq) | % of Total |
|---|---|---|---|---|
| US electric grid | Iodine-132 (isotope) | model/secondary | 2.45e-01 | 6.37e-07 |
| US electric grid | Iodine-135 (isotope) | model/secondary | 6.39e-02 | 1.66e-07 |
| US electric grid | Cesium-134 (isotope) | model/secondary | 5.07e-02 | 1.32e-07 |
| US electric grid | Manganese-54 (isotope) | model/secondary | 1.42e-02 | 3.69e-08 |
| US electric grid | Cobalt-57 (isotope) | model/secondary | 2.69e-03 | 6.99e-09 |
| US electric grid | Bromine-89 (isotope) | model/secondary | 1.85e-03 | 4.80e-09 |
| US electric grid | Zirconium-95 (isotope) | model/secondary | 1.46e-03 | 3.79e-09 |
| US electric grid | Bromine-90 (isotope) | model/secondary | 7.51e-04 | 1.95e-09 |
| US electric grid | Niobium-95 (isotope) | model/secondary | 5.65e-04 | 1.47e-09 |
| US electric grid | Technetium-99M (isotope) | model/secondary | 7.57e-05 | 1.97e-10 |
| US electric grid | Silver-110M (isotope) | model/secondary | 1.68e-05 | 4.37e-11 |
| **Total Use, Maintenance and Repair** | | | **4.36e+05** | **1.13e+00** |
| **End-of-life Manufacturing Stage** | | | | |
| US electric grid | Xenon-133 (isotope) | model/secondary | 3.12e+01 | 8.10e-05 |
| US electric grid | Tritium-3 (isotope) | model/secondary | 3.75e+00 | 9.73e-06 |
| US electric grid | Krypton-85 (isotope) | model/secondary | 2.65e+00 | 6.88e-06 |
| US electric grid | Xenon-133M (isotope) | model/secondary | 2.07e+00 | 5.38e-06 |
| US electric grid | Argon-41 (isotope) | model/secondary | 1.60e+00 | 4.15e-06 |
| US electric grid | Xenon-135 (isotope) | model/secondary | 1.18e+00 | 3.06e-06 |
| US electric grid | Cobalt-58 (isotope) | model/secondary | 3.44e-01 | 8.93e-07 |
| US electric grid | Krypton-88 (isotope) | model/secondary | 2.24e-01 | 5.82e-07 |
| US electric grid | Xenon-131M (isotope) | model/secondary | 2.16e-01 | 5.61e-07 |
| US electric grid | Krypton-85M (isotope) | model/secondary | 1.28e-01 | 3.33e-07 |
| US electric grid | Iodine-133 (isotope) | model/secondary | 1.12e-01 | 2.91e-07 |
| US electric grid | Xenon-138 (isotope) | model/secondary | 7.45e-02 | 1.94e-07 |
| US electric grid | Krypton-87 (isotope) | model/secondary | 4.78e-02 | 1.24e-07 |
| US electric grid | Xenon-135M (isotope) | model/secondary | 2.25e-02 | 5.84e-08 |
| LPG Production | Radioactive substance (unspecified) | secondary | 7.95e-03 | 2.07e-08 |
| US electric grid | Rubidium-88 (isotope) | model/secondary | 5.25e-04 | 1.36e-09 |
| US electric grid | Iodine-134 (isotope) | model/secondary | 1.27e-04 | 3.30e-10 |
| US electric grid | Iodine-131 (isotope) | model/secondary | 1.21e-04 | 3.14e-10 |
| US electric grid | Chromium-51 (isotope) | model/secondary | 1.00e-04 | 2.60e-10 |
| US electric grid | Cesium-137 (isotope) | model/secondary | 3.83e-05 | 9.94e-11 |
| US electric grid | Cobalt-60 (isotope) | model/secondary | 2.59e-05 | 6.72e-11 |
| US electric grid | Iodine-132 (isotope) | model/secondary | 2.46e-05 | 6.38e-11 |
| US electric grid | Iodine-135 (isotope) | model/secondary | 6.39e-06 | 1.66e-11 |
| US electric grid | Cesium-134 (isotope) | model/secondary | 5.07e-06 | 1.32e-11 |
| US electric grid | Manganese-54 (isotope) | model/secondary | 1.42e-06 | 3.69e-12 |
| US electric grid | Cobalt-57 (isotope) | model/secondary | 2.69e-07 | 7.00e-13 |
| US electric grid | Bromine-89 (isotope) | model/secondary | 1.85e-07 | 4.80e-13 |
| US electric grid | Zirconium-95 (isotope) | model/secondary | 1.46e-07 | 3.79e-13 |
| US electric grid | Bromine-90 (isotope) | model/secondary | 7.52e-08 | 1.95e-13 |
| US electric grid | Niobium-95 (isotope) | model/secondary | 5.65e-08 | 1.47e-13 |
| US electric grid | Technetium-99M (isotope) | model/secondary | 7.58e-09 | 1.97e-14 |
| US electric grid | Silver-110M (isotope) | model/secondary | 1.68e-09 | 4.38e-15 |
| Natural Gas Prod. | Radioactive substance (unspecified) | secondary | -9.34e-03 | -2.43e-08 |
| CRT Incineration | Radioactive substance (unspecified) | secondary | -1.45e-01 | -3.76e-07 |
| Fuel Oil #4 Prod. | Radioactive substance (unspecified) | secondary | -2.26e+00 | -5.87e-06 |
| **Total End-of-life** | | | **4.12e+01** | **1.07e-04** |
| **Total All Life-cycle Stages** | | | **3.85e+07** | **1.00e+02** |

## Table M-30. LCD LCIA Results for the Radioactivity Impact Category

| Process Group | Material | LCI Data Type | Radioactivity (Bq) | % of Total |
|---|---|---|---|---|
| **Materials Processing Life-cycle Stage** | | | | |
| Steel Prod., cold-rolled, semi-finished | Plutonium-241 (isotope) | secondary | 1.18e+07 | 9.64e+01 |
| Steel Prod., cold-rolled, semi-finished | Plutonium-240 (isotope) | secondary | 5.08e+04 | 4.16e-01 |
| Steel Prod., cold-rolled, semi-finished | Cesium-135 (isotope) | secondary | 4.59e+04 | 3.76e-01 |
| Steel Prod., cold-rolled, semi-finished | Radon-222 (isotope) | secondary | 4.30e+04 | 3.52e-01 |
| Steel Prod., cold-rolled, semi-finished | Plutonium-239 (isotope) | secondary | 3.57e+04 | 2.93e-01 |
| Steel Prod., cold-rolled, semi-finished | Strontium-90 (isotope) | secondary | 6.86e+03 | 5.62e-02 |
| Steel Prod., cold-rolled, semi-finished | Tritium-3 (isotope) | secondary | 1.23e+03 | 1.00e-02 |
| Steel Prod., cold-rolled, semi-finished | radioactive gas (unspecified) | secondary | 8.98e+02 | 7.36e-03 |
| Steel Prod., cold-rolled, semi-finished | Xenon-133 (isotope) | secondary | 7.63e+02 | 6.25e-03 |
| Steel Prod., cold-rolled, semi-finished | Radium-226 (isotope) | secondary | 4.24e+02 | 3.48e-03 |
| Steel Prod., cold-rolled, semi-finished | Thorium-230 (isotope) | secondary | 2.53e+02 | 2.07e-03 |
| Steel Prod., cold-rolled, semi-finished | Plutonium-242 (isotope) | secondary | 1.92e+02 | 1.57e-03 |
| Steel Prod., cold-rolled, semi-finished | Curium-244 (isotope) | secondary | 1.91e+02 | 1.57e-03 |
| Steel Prod., cold-rolled, semi-finished | Uranium-234 (isotope) | secondary | 1.55e+02 | 1.27e-03 |
| Steel Prod., cold-rolled, semi-finished | Americium-241 (isotope) | secondary | 9.42e+01 | 7.72e-04 |
| Steel Prod., cold-rolled, semi-finished | Krypton-85 (isotope) | secondary | 5.45e+01 | 4.47e-04 |
| Steel Prod., cold-rolled, semi-finished | Uranium-238 (isotope) | secondary | 4.55e+01 | 3.72e-04 |
| Steel Prod., cold-rolled, semi-finished | Samarium-151 (isotope) | secondary | 4.25e+01 | 3.48e-04 |
| Steel Prod., cold-rolled, semi-finished | Neptunium-237 (isotope) | secondary | 2.95e+01 | 2.42e-04 |
| Steel Prod., cold-rolled, semi-finished | Carbon-14 (isotope) | secondary | 9.35e+00 | 7.66e-05 |
| Steel Prod., cold-rolled, semi-finished | Radium-222 (isotope) | secondary | 3.26e+00 | 2.67e-05 |
| Steel Prod., cold-rolled, semi-finished | Uranium-235 (isotope) | secondary | 2.87e+00 | 2.35e-05 |
| Steel Prod., cold-rolled, semi-finished | Americium-243 (isotope) | secondary | 2.05e+00 | 1.68e-05 |
| Steel Prod., cold-rolled, semi-finished | Technetium-99M (isotope) | secondary | 1.40e+00 | 1.15e-05 |
| Natural Gas Prod. | Radioactive substance (unspecified) | secondary | 1.30e+00 | 1.07e-05 |
| Steel Prod., cold-rolled, semi-finished | Thorium-228 (isotope) | secondary | 1.22e+00 | 1.00e-05 |
| Steel Prod., cold-rolled, semi-finished | Radon-220 (isotope) | secondary | 9.93e-01 | 8.13e-06 |
| Steel Prod., cold-rolled, semi-finished | Radium-228 (isotope) | secondary | 6.36e-01 | 5.21e-06 |
| Steel Prod., cold-rolled, semi-finished | Polonium-210 (isotope) | secondary | 5.52e-01 | 4.52e-06 |
| Steel Prod., cold-rolled, semi-finished | Lead-210 (isotope) | secondary | 3.21e-01 | 2.63e-06 |
| Steel Prod., cold-rolled, semi-finished | Radium-224 (isotope) | secondary | 2.97e-01 | 2.43e-06 |
| Steel Prod., cold-rolled, semi-finished | Zirconium-93 (isotope) | secondary | 1.84e-01 | 1.51e-06 |
| Steel Prod., cold-rolled, semi-finished | Cesium-137 (isotope) | secondary | 1.56e-01 | 1.28e-06 |
| Steel Prod., cold-rolled, semi-finished | Protactinium-234 (isotope) | secondary | 9.87e-02 | 8.09e-07 |
| Steel Prod., cold-rolled, semi-finished | Thorium-234 (isotope) | secondary | 9.87e-02 | 8.09e-07 |
| Steel Prod., cold-rolled, semi-finished | Silver-110M (isotope) | secondary | 9.21e-02 | 7.54e-07 |
| Steel Prod., cold-rolled, semi-finished | Potassium-40 (isotope) | secondary | 8.57e-02 | 7.02e-07 |
| Steel Prod., cold-rolled, semi-finished | Cobalt-58 (isotope) | secondary | 6.17e-02 | 5.06e-07 |
| Steel Prod., cold-rolled, semi-finished | Tin-126 (isotope) | secondary | 5.79e-02 | 4.74e-07 |
| Steel Prod., cold-rolled, semi-finished | Cobalt-60 (isotope) | secondary | 3.87e-02 | 3.17e-07 |
| Steel Prod., cold-rolled, semi-finished | Selenium-79 (isotope) | secondary | 3.31e-02 | 2.71e-07 |
| Steel Prod., cold-rolled, semi-finished | Radioactive aerosols and halogenes (unspecified) | secondary | 2.81e-02 | 2.30e-07 |
| Steel Prod., cold-rolled, semi-finished | Thorium-232 (isotope) | secondary | 2.28e-02 | 1.87e-07 |
| Steel Prod., cold-rolled, semi-finished | Curium-245 (isotope) | secondary | 2.13e-02 | 1.75e-07 |
| Steel Prod., cold-rolled, semi-finished | Antimony-124 (isotope) | secondary | 2.12e-02 | 1.74e-07 |
| Steel Prod., cold-rolled, semi-finished | Cesium-134 (isotope) | secondary | 1.90e-02 | 1.56e-07 |
| Steel Prod., cold-rolled, semi-finished | Palladium-107 (isotope) | secondary | 1.04e-02 | 8.48e-08 |

## Table M-30. LCD LCIA Results for the Radioactivity Impact Category

| Process Group | Material | LCI Data Type | Radioactivity (Bq) | % of Total |
|---|---|---|---|---|
| Steel Prod., cold-rolled, semi-finished | Iodine-131 (isotope) | secondary | 4.42e-03 | 3.62e-08 |
| Steel Prod., cold-rolled, semi-finished | Iodine-133 (isotope) | secondary | 4.09e-03 | 3.35e-08 |
| Steel Prod., cold-rolled, semi-finished | Manganese-54 (isotope) | secondary | 3.07e-03 | 2.51e-08 |
| Steel Prod., cold-rolled, semi-finished | Iodine-129 (isotope) | secondary | 3.01e-03 | 2.47e-08 |
| Steel Prod., cold-rolled, semi-finished | Radioactive substance (unspecified) | secondary | 1.57e-03 | 1.28e-08 |
| **Total Materials Processing** | | | **1.20e+07** | **9.79e+01** |
| **Manufacturing Life-cycle Stage** | | | | |
| Japanese Electric Grid | Xenon-133M (isotope) | model/secondary | 6.58e+04 | 5.39e-01 |
| Japanese Electric Grid | Tritium-3 (isotope) | model/secondary | 7.90e+03 | 6.48e-02 |
| Japanese Electric Grid | Krypton-85 (isotope) | model/secondary | 5.59e+03 | 4.58e-02 |
| Japanese Electric Grid | Xenon-133 (isotope) | model/secondary | 4.37e+03 | 3.58e-02 |
| Japanese Electric Grid | Argon-41 (isotope) | model/secondary | 3.37e+03 | 2.76e-02 |
| Japanese Electric Grid | Xenon-135 (isotope) | model/secondary | 2.48e+03 | 2.04e-02 |
| US electric grid | Xenon-133 (isotope) | model/secondary | 6.04e+02 | 4.95e-03 |
| Japanese Electric Grid | Krypton-88 (isotope) | model/secondary | 4.73e+02 | 3.88e-03 |
| Japanese Electric Grid | Xenon-131M (isotope) | model/secondary | 4.56e+02 | 3.74e-03 |
| Japanese Electric Grid | Krypton-85M (isotope) | model/secondary | 2.71e+02 | 2.22e-03 |
| Japanese Electric Grid | Iodine-133 (isotope) | model/secondary | 2.37e+02 | 1.94e-03 |
| Japanese Electric Grid | Xenon-138 (isotope) | model/secondary | 1.57e+02 | 1.29e-03 |
| Japanese Electric Grid | Krypton-87 (isotope) | model/secondary | 1.01e+02 | 8.26e-04 |
| US electric grid | Tritium-3 (isotope) | model/secondary | 7.25e+01 | 5.94e-04 |
| US electric grid | Krypton-85 (isotope) | model/secondary | 5.13e+01 | 4.20e-04 |
| Japanese Electric Grid | Xenon-135M (isotope) | model/secondary | 4.74e+01 | 3.89e-04 |
| LPG Production | Radioactive substance (unspecified) | secondary | 4.42e+01 | 3.62e-04 |
| US electric grid | Xenon-133M (isotope) | model/secondary | 4.01e+01 | 3.29e-04 |
| US electric grid | Argon-41 (isotope) | model/secondary | 3.09e+01 | 2.53e-04 |
| US electric grid | Xenon-135 (isotope) | model/secondary | 2.28e+01 | 1.87e-04 |
| US electric grid | Cobalt-58 (isotope) | model/secondary | 6.65e+00 | 5.45e-05 |
| US electric grid | Krypton-88 (isotope) | model/secondary | 4.34e+00 | 3.56e-05 |
| US electric grid | Xenon-131M (isotope) | model/secondary | 4.18e+00 | 3.43e-05 |
| US electric grid | Krypton-85M (isotope) | model/secondary | 2.48e+00 | 2.04e-05 |
| US electric grid | Iodine-133 (isotope) | model/secondary | 2.17e+00 | 1.78e-05 |
| US electric grid | Xenon-138 (isotope) | model/secondary | 1.44e+00 | 1.18e-05 |
| Japanese Electric Grid | Rubidium-88 (isotope) | model/secondary | 1.11e+00 | 9.07e-06 |
| US electric grid | Krypton-87 (isotope) | model/secondary | 9.25e-01 | 7.58e-06 |
| US electric grid | Xenon-135M (isotope) | model/secondary | 4.35e-01 | 3.57e-06 |
| Fuel Oil #4 Prod. | Radioactive substance (unspecified) | secondary | 3.24e-01 | 2.65e-06 |
| Japanese Electric Grid | Iodine-134 (isotope) | model/secondary | 2.68e-01 | 2.20e-06 |
| Japanese Electric Grid | Iodine-131 (isotope) | model/secondary | 2.55e-01 | 2.09e-06 |
| Japanese Electric Grid | Chromium-51 (isotope) | model/secondary | 2.11e-01 | 1.73e-06 |
| Fuel Oil #2 Prod. | Radioactive substance (unspecified) | secondary | 1.21e-01 | 9.88e-07 |
| Fuel Oil #6 Prod. | Radioactive substance (unspecified) | secondary | 1.06e-01 | 8.69e-07 |
| Japanese Electric Grid | Cesium-137 (isotope) | model/secondary | 8.08e-02 | 6.62e-07 |
| Japanese Electric Grid | Cobalt-60 (isotope) | model/secondary | 5.46e-02 | 4.47e-07 |
| Japanese Electric Grid | Iodine-132 (isotope) | model/secondary | 5.18e-02 | 4.24e-07 |
| Natural Gas Prod. | Radioactive substance (unspecified) | secondary | 2.94e-02 | 2.41e-07 |
| Japanese Electric Grid | Iodine-135 (isotope) | model/secondary | 1.35e-02 | 1.10e-07 |
| Japanese Electric Grid | Cesium-134 (isotope) | model/secondary | 1.07e-02 | 8.77e-08 |
| US electric grid | Rubidium-88 (isotope) | model/secondary | 1.02e-02 | 8.32e-08 |
| Japanese Electric Grid | Cobalt-58 (isotope) | model/secondary | 7.26e-03 | 5.94e-08 |
| Japanese Electric Grid | Manganese-54 (isotope) | model/secondary | 3.00e-03 | 2.46e-08 |

## Table M-30. LCD LCIA Results for the Radioactivity Impact Category

| Process Group | Material | LCI Data Type | Radioactivity (Bq) | % of Total |
|---|---|---|---|---|
| US electric grid | Iodine-134 (isotope) | model/secondary | 2.46e-03 | 2.02e-08 |
| US electric grid | Iodine-131 (isotope) | model/secondary | 2.34e-03 | 1.92e-08 |
| US electric grid | Chromium-51 (isotope) | model/secondary | 1.94e-03 | 1.59e-08 |
| US electric grid | Cesium-137 (isotope) | model/secondary | 7.41e-04 | 6.07e-09 |
| Japanese Electric Grid | Cobalt-57 (isotope) | model/secondary | 5.68e-04 | 4.66e-09 |
| US electric grid | Cobalt-60 (isotope) | model/secondary | 5.01e-04 | 4.10e-09 |
| US electric grid | Iodine-132 (isotope) | model/secondary | 4.75e-04 | 3.89e-09 |
| Japanese Electric Grid | Bromine-89 (isotope) | model/secondary | 3.90e-04 | 3.19e-09 |
| Japanese Electric Grid | Zirconium-95 (isotope) | model/secondary | 3.08e-04 | 2.52e-09 |
| Japanese Electric Grid | Bromine-90 (isotope) | model/secondary | 1.59e-04 | 1.30e-09 |
| US electric grid | Iodine-135 (isotope) | model/secondary | 1.24e-04 | 1.01e-09 |
| Japanese Electric Grid | Niobium-95 (isotope) | model/secondary | 1.19e-04 | 9.77e-10 |
| US electric grid | Cesium-134 (isotope) | model/secondary | 9.82e-05 | 8.04e-10 |
| US electric grid | Manganese-54 (isotope) | model/secondary | 2.75e-05 | 2.25e-10 |
| Japanese Electric Grid | Technetium-99M (isotope) | model/secondary | 1.60e-05 | 1.31e-10 |
| US electric grid | Cobalt-57 (isotope) | model/secondary | 5.21e-06 | 4.27e-11 |
| US electric grid | Bromine-89 (isotope) | model/secondary | 3.58e-06 | 2.93e-11 |
| Japanese Electric Grid | Silver-110M (isotope) | model/secondary | 3.56e-06 | 2.91e-11 |
| US electric grid | Zirconium-95 (isotope) | model/secondary | 2.82e-06 | 2.31e-11 |
| US electric grid | Bromine-90 (isotope) | model/secondary | 1.45e-06 | 1.19e-11 |
| US electric grid | Niobium-95 (isotope) | model/secondary | 1.09e-06 | 8.96e-12 |
| US electric grid | Technetium-99M (isotope) | model/secondary | 1.47e-07 | 1.20e-12 |
| US electric grid | Silver-110M (isotope) | model/secondary | 3.26e-08 | 2.67e-13 |
| **Total Manufacturing** | | | **9.22e+04** | **7.55e-01** |
| **Use, Maintenance and Repair Life-cycle Stage** | | | | |
| US electric grid | Xenon-133 (isotope) | model/secondary | 1.16e+05 | 9.53e-01 |
| US electric grid | Tritium-3 (isotope) | model/secondary | 1.40e+04 | 1.14e-01 |
| US electric grid | Krypton-85 (isotope) | model/secondary | 9.88e+03 | 8.10e-02 |
| US electric grid | Xenon-133M (isotope) | model/secondary | 7.73e+03 | 6.34e-02 |
| US electric grid | Argon-41 (isotope) | model/secondary | 5.96e+03 | 4.88e-02 |
| US electric grid | Xenon-135 (isotope) | model/secondary | 4.39e+03 | 3.60e-02 |
| US electric grid | Cobalt-58 (isotope) | model/secondary | 1.28e+03 | 1.05e-02 |
| US electric grid | Krypton-88 (isotope) | model/secondary | 8.37e+02 | 6.85e-03 |
| US electric grid | Xenon-131M (isotope) | model/secondary | 8.06e+02 | 6.60e-03 |
| US electric grid | Krypton-85M (isotope) | model/secondary | 4.79e+02 | 3.92e-03 |
| US electric grid | Iodine-133 (isotope) | model/secondary | 4.18e+02 | 3.43e-03 |
| US electric grid | Xenon-138 (isotope) | model/secondary | 2.78e+02 | 2.28e-03 |
| US electric grid | Krypton-87 (isotope) | model/secondary | 1.78e+02 | 1.46e-03 |
| US electric grid | Xenon-135M (isotope) | model/secondary | 8.39e+01 | 6.87e-04 |
| US electric grid | Rubidium-88 (isotope) | model/secondary | 1.96e+00 | 1.60e-05 |
| US electric grid | Iodine-134 (isotope) | model/secondary | 4.74e-01 | 3.89e-06 |
| US electric grid | Iodine-131 (isotope) | model/secondary | 4.51e-01 | 3.69e-06 |
| US electric grid | Chromium-51 (isotope) | model/secondary | 3.74e-01 | 3.06e-06 |
| US electric grid | Cesium-137 (isotope) | model/secondary | 1.43e-01 | 1.17e-06 |
| US electric grid | Cobalt-60 (isotope) | model/secondary | 9.65e-02 | 7.91e-07 |
| US electric grid | Iodine-132 (isotope) | model/secondary | 9.16e-02 | 7.50e-07 |
| US electric grid | Iodine-135 (isotope) | model/secondary | 2.38e-02 | 1.95e-07 |
| US electric grid | Cesium-134 (isotope) | model/secondary | 1.89e-02 | 1.55e-07 |
| US electric grid | Manganese-54 (isotope) | model/secondary | 5.30e-03 | 4.35e-08 |

## Table M-30. LCD LCIA Results for the Radioactivity Impact Category

| Process Group | Material | LCI Data Type | Radioactivity (Bq) | % of Total |
|---|---|---|---|---|
| US electric grid | Cobalt-57 (isotope) | model/secondary | 1.00e-03 | 8.23e-09 |
| US electric grid | Bromine-89 (isotope) | model/secondary | 6.89e-04 | 5.65e-09 |
| US electric grid | Zirconium-95 (isotope) | model/secondary | 5.44e-04 | 4.46e-09 |
| US electric grid | Bromine-90 (isotope) | model/secondary | 2.80e-04 | 2.30e-09 |
| US electric grid | Niobium-95 (isotope) | model/secondary | 2.11e-04 | 1.73e-09 |
| US electric grid | Technetium-99M (isotope) | model/secondary | 2.83e-05 | 2.32e-10 |
| US electric grid | Silver-110M (isotope) | model/secondary | 6.29e-06 | 5.15e-11 |
| **Total Use, Maintenance and Repair** | | | **1.63e+05** | **1.33e+00** |
| **End-of-life Life-cycle Stage** | | | | |
| US electric grid | Xenon-133 (isotope) | model/secondary | 2.21e+01 | 1.81e-04 |
| US electric grid | Tritium-3 (isotope) | model/secondary | 2.65e+00 | 2.17e-05 |
| US electric grid | Krypton-85 (isotope) | model/secondary | 1.88e+00 | 1.54e-05 |
| US electric grid | Xenon-133M (isotope) | model/secondary | 1.47e+00 | 1.20e-05 |
| US electric grid | Argon-41 (isotope) | model/secondary | 1.13e+00 | 9.26e-06 |
| US electric grid | Xenon-135 (isotope) | model/secondary | 8.33e-01 | 6.83e-06 |
| US electric grid | Cobalt-58 (isotope) | model/secondary | 2.43e-01 | 1.99e-06 |
| US electric grid | Krypton-88 (isotope) | model/secondary | 1.59e-01 | 1.30e-06 |
| US electric grid | Xenon-131M (isotope) | model/secondary | 1.53e-01 | 1.25e-06 |
| US electric grid | Krypton-85M (isotope) | model/secondary | 9.09e-02 | 7.45e-07 |
| US electric grid | Iodine-133 (isotope) | model/secondary | 7.94e-02 | 6.50e-07 |
| US electric grid | Xenon-138 (isotope) | model/secondary | 5.28e-02 | 4.32e-07 |
| US electric grid | Krypton-87 (isotope) | model/secondary | 3.38e-02 | 2.77e-07 |
| US electric grid | Xenon-135M (isotope) | model/secondary | 1.59e-02 | 1.30e-07 |
| LPG Production | Radioactive substance (unspecified) | secondary | 3.63e-03 | 2.97e-08 |
| US electric grid | Rubidium-88 (isotope) | model/secondary | 3.72e-04 | 3.04e-09 |
| US electric grid | Iodine-134 (isotope) | model/secondary | 9.00e-05 | 7.37e-10 |
| US electric grid | Iodine-131 (isotope) | model/secondary | 8.56e-05 | 7.01e-10 |
| US electric grid | Chromium-51 (isotope) | model/secondary | 7.09e-05 | 5.81e-10 |
| US electric grid | Cesium-137 (isotope) | model/secondary | 2.71e-05 | 2.22e-10 |
| US electric grid | Cobalt-60 (isotope) | model/secondary | 1.83e-05 | 1.50e-10 |
| US electric grid | Iodine-132 (isotope) | model/secondary | 1.74e-05 | 1.42e-10 |
| US electric grid | Iodine-135 (isotope) | model/secondary | 4.52e-06 | 3.70e-11 |
| US electric grid | Cesium-134 (isotope) | model/secondary | 3.59e-06 | 2.94e-11 |
| US electric grid | Manganese-54 (isotope) | model/secondary | 1.01e-06 | 8.25e-12 |
| US electric grid | Cobalt-57 (isotope) | model/secondary | 1.91e-07 | 1.56e-12 |
| US electric grid | Bromine-89 (isotope) | model/secondary | 1.31e-07 | 1.07e-12 |
| US electric grid | Zirconium-95 (isotope) | model/secondary | 1.03e-07 | 8.46e-13 |
| US electric grid | Bromine-90 (isotope) | model/secondary | 5.32e-08 | 4.36e-13 |
| US electric grid | Niobium-95 (isotope) | model/secondary | 4.00e-08 | 3.28e-13 |
| US electric grid | Technetium-99M (isotope) | model/secondary | 5.36e-09 | 4.39e-14 |
| US electric grid | Silver-110M (isotope) | model/secondary | 1.19e-09 | 9.77e-15 |
| Natural Gas Prod. | Radioactive substance (unspecified) | secondary | -6.16e-03 | -5.05e-10 |
| LCD incineration | Radioactive substance (unspecified) | secondary | -9.39e-02 | -7.69e-09 |
| Fuel Oil #4 Prod. | Radioactive substance (unspecified) | secondary | -1.49e+00 | -1.22e-07 |
| **Total End-of-life** | | | **2.93e+01** | **2.53e-04** |
| **Total All Life-cycle Stages** | | | **1.22e+07** | **1.00e+02** |

## Table M-31. CRT LCIA Results for the Chronic Occupational Health Effects Impact Category

| Process Group | Material | LCI Data Type | Chronic Occupational Toxicity (tox-kg) | % of Total |
|---|---|---|---|---|
| **Materials Processing Life-cycle Stage** | | | | |
| Steel Prod., cold-rolled, semi-finished | Sodium Dichromate | secondary | 7.23e-01 | 7.74e-02 |
| Steel Prod., cold-rolled, semi-finished | Phenolsulphonic Acid | secondary | 6.24e-03 | 6.68e-04 |
| Aluminum Prod. | Barium sulfate | secondary | 2.28e-03 | 2.44e-04 |
| Steel Prod., cold-rolled, semi-finished | Dioctyl Sebacate | secondary | 2.46e-04 | 2.64e-05 |
| Ferrite mfg. | Barium sulfate | secondary | 2.14e-04 | 2.29e-05 |
| Steel Prod., cold-rolled, semi-finished | Etoxy Naphtol Sulphonic Acid (ENSA) | secondary | 1.99e-04 | 2.13e-05 |
| Steel Prod., cold-rolled, semi-finished | Barium sulfate | secondary | 1.90e-04 | 2.03e-05 |
| ABS Production | Barium sulfate | secondary | 8.47e-07 | 9.07e-08 |
| Invar | Borax | secondary | 5.26e-07 | 5.64e-08 |
| Ferrite mfg. | Borax | secondary | 5.14e-07 | 5.50e-08 |
| **Total Materials Processing** | | | **7.32e-01** | **7.84e-02** |
| **Manufacturing Life-cycle Stage** | | | | |
| Glass/frit | Liquified petroleum gas ("propane") | primary | 7.02e+02 | 7.51e+01 |
| PWB Mfg. | Sulfuric acid | model/secondary | 1.26e+02 | 1.34e+01 |
| CRT tube mfg. | Sulfuric acid | primary | 3.84e+01 | 4.11e+00 |
| Glass/frit | Barium Carbonate | primary | 1.68e+01 | 1.80e+00 |
| CRT tube mfg. | Fuel oil #6 | primary | 7.37e+00 | 7.89e-01 |
| Glass/frit | Fuel oil #2 | primary | 2.32e+00 | 2.49e-01 |
| CRT monitor assembly | PPB | primary | 1.47e+00 | 1.57e-01 |
| Glass/frit | Lead | primary | 8.95e-01 | 9.58e-02 |
| PWB Mfg. | Hydrochloric acid | model/secondary | 8.78e-01 | 9.40e-02 |
| PWB Mfg. | Formaldehyde | model/secondary | 7.56e-01 | 8.09e-02 |
| CRT tube mfg. | LNG | primary | 6.71e-01 | 7.18e-02 |
| CRT tube mfg. | Ammonium bifluoride | primary | 4.85e-01 | 5.20e-02 |
| Glass/frit | Cerium Oxide | primary | 4.53e-01 | 4.86e-02 |
| Glass/frit | Strontium Carbonate | primary | 3.52e-01 | 3.77e-02 |
| Glass/frit | Sodium Dichromate | primary | 2.88e-01 | 3.09e-02 |
| CRT monitor assembly | Fuel oil #4 | primary | 2.74e-01 | 2.93e-02 |
| PWB Mfg. | Nitric acid | model/secondary | 2.72e-01 | 2.91e-02 |
| CRT tube mfg. | Hydrochloric acid | primary | 2.01e-01 | 2.15e-02 |
| Glass/frit | Hydrofluoric acid | primary | 1.58e-01 | 1.69e-02 |
| PWB Mfg. | Ammonium hydroxide | model/secondary | 1.55e-01 | 1.66e-02 |
| CRT tube mfg. | Sulfuric acid, aluminum salt | primary | 1.20e-01 | 1.28e-02 |
| Glass/frit | Zircon Sand | primary | 1.09e-01 | 1.16e-02 |
| CRT tube mfg. | Hydrogen peroxide | primary | 1.07e-01 | 1.14e-02 |
| CRT monitor assembly | Triphenyl phosphate | primary | 1.06e-01 | 1.13e-02 |
| Glass/frit | Lead | primary | 9.33e-02 | 9.99e-03 |
| CRT tube mfg. | Chlorine | primary | 8.07e-02 | 8.64e-03 |
| CRT glass mfg. | Aluminum Oxide | primary | 6.74e-02 | 7.22e-03 |
| PWB Mfg. | Hydrogen peroxide | model/secondary | 6.21e-02 | 6.65e-03 |
| CRT monitor assembly | Tricresyl phosphate | primary | 4.59e-02 | 4.92e-03 |
| CRT monitor assembly | Isopropyl alcohol | primary | 2.44e-02 | 2.61e-03 |
| CRT tube mfg. | Nitric acid | primary | 1.63e-02 | 1.75e-03 |
| Glass/frit | Borax | primary | 1.60e-02 | 1.71e-03 |
| CRT tube mfg. | Hydrofluoric acid | primary | 1.48e-02 | 1.58e-03 |
| CRT tube mfg. | Boric acid | primary | 1.37e-02 | 1.47e-03 |
| PWB Mfg. | Glycol ethers | model/secondary | 1.34e-02 | 1.43e-03 |
| CRT tube mfg. | Red Phosphor (Y2O2S) | primary | 9.31e-03 | 9.96e-04 |

## Table M-31. CRT LCIA Results for the Chronic Occupational Health Effects Impact Category

| Process Group | Material | LCI Data Type | Chronic Occupational Toxicity (tox-kg) | % of Total |
|---|---|---|---|---|
| CRT monitor assembly | Phosphate ester | primary | 8.41e-03 | 9.00e-04 |
| CRT tube mfg. | Polyvinyl alcohol | primary | 8.11e-03 | 8.69e-04 |
| CRT tube mfg. | Blue Phosphor (ZnS) | primary | 7.67e-03 | 8.22e-04 |
| CRT tube mfg. | Green Phosphor (ZnS) | primary | 6.68e-03 | 7.15e-04 |
| CRT tube mfg. | Chromium (VI) | primary | 5.68e-03 | 6.09e-04 |
| CRT tube mfg. | Sodium Metabisulfite | primary | 4.67e-03 | 5.00e-04 |
| CRT tube mfg. | Dimethyl Formamide | primary | 3.84e-03 | 4.11e-04 |
| CRT tube mfg. | Isopentylacetate | primary | 3.49e-03 | 3.74e-04 |
| CRT tube mfg. | Blue Phosphor (ZnS.Ag.Al) | primary | 3.34e-03 | 3.57e-04 |
| CRT tube mfg. | Ammonium hydroxide | primary | 2.81e-03 | 3.01e-04 |
| CRT tube mfg. | Green Phosphor (ZnS.Cu.Al) | primary | 2.68e-03 | 2.87e-04 |
| CRT tube mfg. | Red Phosphor (Y2O2S.Eu) | primary | 2.67e-03 | 2.86e-04 |
| CRT tube mfg. | Amyl acetate (mixed isomers) | primary | 2.41e-03 | 2.58e-04 |
| CRT tube mfg. | Ammonium fluoride | primary | 1.78e-03 | 1.91e-04 |
| CRT tube mfg. | Toluene | primary | 8.02e-04 | 8.59e-05 |
| CRT tube mfg. | Sodium Persulfate | primary | 7.08e-04 | 7.58e-05 |
| CRT tube mfg. | Ammonium Oxalate Monohydrate | primary | 6.32e-04 | 6.77e-05 |
| Japanese Electric Grid | Uranium, yellowcake | model/secondary | 6.07e-04 | 6.50e-05 |
| CRT tube mfg. | Sodium Hypochlorite | primary | 5.24e-04 | 5.61e-05 |
| CRT tube mfg. | Polyvinyl Pyrrolidone (PVP) | primary | 5.22e-04 | 5.59e-05 |
| CRT tube mfg. | Periodic Acid | primary | 4.53e-04 | 4.85e-05 |
| CRT tube mfg. | Ammonia | primary | 3.24e-04 | 3.47e-05 |
| CRT monitor assembly | 2,2,4-trimethylpentane | primary | 3.01e-04 | 3.22e-05 |
| US electric grid | Uranium, yellowcake | model/secondary | 1.55e-04 | 1.66e-05 |
| CRT tube mfg. | Ammonium Dichromate | primary | 6.99e-05 | 7.49e-06 |
| CRT tube mfg. | Sodium Dichromate Dihydrate (VI) | primary | 6.19e-05 | 6.63e-06 |
| CRT tube mfg. | Acetone | primary | 3.77e-05 | 4.03e-06 |
| CRT monitor assembly | Fluorocarbon resin | primary | 3.75e-05 | 4.02e-06 |
| CRT tube mfg. | Xylene (mixed isomers) | primary | 3.19e-05 | 3.42e-06 |
| CRT monitor assembly | Cyclohexane | primary | 8.61e-06 | 9.22e-07 |
| **Total Manufacturing** | | | **9.00e+02** | **9.64e+01** |
| **Use, Maintenance and Repair Life-cycle Stage** | | | | |
| US electric grid | Natural gas | model/secondary | 2.80e+01 | 3.00e+00 |
| US electric grid | Petroleum (in gournd) | model/secondary | 7.60e+00 | 8.14e-01 |
| US electric grid | Uranium, yellowcake | model/secondary | 9.70e-03 | 1.04e-03 |
| **Total Use, Maintenance and Repair** | | | **3.56e+01** | **3.81e+00** |
| **End-of-life Life-cycle Stage** | | | | |
| CRT landfilling | Fuel oil #4 | primary | 3.86e-02 | 4.13e-03 |
| CRT Recycling | Liquified petroleum gas ("propane") | primary | 6.06e-03 | 6.48e-04 |
| US electric grid | Uranium, yellowcake | model/secondary | 9.71e-07 | 1.04e-07 |
| CRT Incineration | Fuel oil #4 | secondary | -2.88e+00 | -3.08e-01 |
| **Total End-of-life** | | | **-2.83e+00** | **-3.03e-01** |
| **Total All Life-cycle Stages** | | | **9.34e+02** | **1.00e+02** |

## Table M-32. LCD LCIA Results for the Chronic Occupational Health Effects Impact Category

| Process Group | Materials | LCI Data Type | Chronic Occupational Toxicity (tox-kg) | % of Total |
|---|---|---|---|---|
| **Materials Processing Life-cycle Stage** | | | | |
| Steel Prod., cold-rolled, semi-finished | Sodium Dichromate | secondary | 3.54e-01 | 5.09e-02 |
| Steel Prod., cold-rolled, semi-finished | Phenolsulphonic Acid | secondary | 3.06e-03 | 4.40e-04 |
| Aluminum Prod. | Barium sulfate | secondary | 8.47e-04 | 1.22e-04 |
| Steel Prod., cold-rolled, semi-finished | Dioctyl Sebacate | secondary | 1.21e-04 | 1.73e-05 |
| Steel Prod., cold-rolled, semi-finished | Etoxy Naphtol Sulphonic Acid (ENSA) | secondary | 9.76e-05 | 1.40e-05 |
| Steel Prod., cold-rolled, semi-finished | Barium sulfate | secondary | 9.30e-05 | 1.34e-05 |
| PMMA Sheet Prod. | Barium sulfate | secondary | 2.42e-05 | 3.47e-06 |
| PMMA Sheet Prod. | Ferromanganese (Fe, Mn, C) | secondary | 7.67e-07 | 1.10e-07 |
| **Total Materials Processing** | | | **3.59e-01** | **5.15e-02** |
| **Manufacturing Life-cycle Stage** | | | | |
| Monitor/module | LNG | primary | 3.95e+02 | 5.67e+01 |
| Monitor/module | Sulfuric acid | primary | 1.58e+02 | 2.26e+01 |
| PWB Mfg. | Sulfuric acid | model/secondary | 5.54e+01 | 7.96e+00 |
| LCD glass mfg. | Liquified petroleum gas ("propane") | primary | 3.25e+01 | 4.67e+00 |
| Monitor/module | Phosphine | primary | 1.23e+01 | 1.77e+00 |
| Panel components | Sulfuric acid | primary | 1.09e+01 | 1.56e+00 |
| Monitor/module | Dimethylsulfoxide | primary | 7.96e+00 | 1.14e+00 |
| Monitor/module | Ethanol amine | primary | 4.32e+00 | 6.21e-01 |
| Panel components | Tetrahydrofuran | primary | 1.32e+00 | 1.89e-01 |
| Monitor/module | Liquified petroleum gas ("propane") | primary | 1.17e+00 | 1.67e-01 |
| LCD glass mfg. | Barium Carbonate | primary | 7.79e-01 | 1.12e-01 |
| Monitor/module | Kerosene | primary | 5.95e-01 | 8.56e-02 |
| Monitor/module | Ammonium bifluoride | primary | 5.62e-01 | 8.07e-02 |
| Monitor/module | Fuel oil #4 | primary | 4.22e-01 | 6.06e-02 |
| Monitor/module | Isopropyl alcohol | primary | 4.19e-01 | 6.02e-02 |
| PWB Mfg. | Hydrochloric acid | model/secondary | 3.87e-01 | 5.57e-02 |
| Panel components | Kerosene | primary | 3.35e-01 | 4.82e-02 |
| PWB Mfg. | Formaldehyde | model/secondary | 3.33e-01 | 4.79e-02 |
| Monitor/module | Tetramethyl ammonium hydroxide | primary | 2.57e-01 | 3.70e-02 |
| Panel components | Fuel oil #6 | primary | 2.51e-01 | 3.61e-02 |
| Monitor/module | Nitrogen fluoride | primary | 2.16e-01 | 3.11e-02 |
| Monitor/module | Hydrochloric acid | primary | 1.97e-01 | 2.83e-02 |
| Monitor/module | Phosphoric acid | primary | 1.90e-01 | 2.73e-02 |
| Monitor/module | 2-(2-butoxyethoxy)-ethanol | primary | 1.81e-01 | 2.60e-02 |
| Monitor/module | N-Butylacetate | primary | 1.64e-01 | 2.35e-02 |
| Monitor/module | Molybdenum | primary | 1.52e-01 | 2.18e-02 |
| PWB Mfg. | Nitric acid | model/secondary | 1.20e-01 | 1.72e-02 |
| LCD glass mfg. | Fuel oil #2 | primary | 1.08e-01 | 1.55e-02 |
| Monitor/module | Hydrofluoric acid | primary | 8.42e-02 | 1.21e-02 |
| PWB Mfg. | Ammonium hydroxide | model/secondary | 6.85e-02 | 9.84e-03 |
| Monitor/module | Ammonia | primary | 4.22e-02 | 6.06e-03 |
| Monitor/module | Sulfur hexafluoride | primary | 3.24e-02 | 4.66e-03 |
| Monitor/module | Propylene glycol monomethyl ether acetate | primary | 3.12e-02 | 4.49e-03 |
| Monitor/module | Chlorine | primary | 3.11e-02 | 4.46e-03 |
| PWB Mfg. | Hydrogen peroxide | model/secondary | 2.74e-02 | 3.94e-03 |
| Monitor/module | Nitric acid | primary | 2.49e-02 | 3.58e-03 |
| Monitor/module | Ammonium fluoride | primary | 2.28e-02 | 3.28e-03 |

## Table M-32. LCD LCIA Results for the Chronic Occupational Health Effects Impact Category

| Process Group | Materials | LCI Data Type | Chronic Occupational Toxicity (tox-kg) | % of Total |
|---|---|---|---|---|
| LCD glass mfg. | Cerium Oxide | primary | 2.10e-02 | 3.02e-03 |
| Monitor/module | Isopropyl alcohol | primary | 1.88e-02 | 2.70e-03 |
| Monitor/module | Acetone | primary | 1.74e-02 | 2.49e-03 |
| LCD glass mfg. | Strontium Carbonate | primary | 1.63e-02 | 2.34e-03 |
| Monitor/module | Glycol ethers | primary | 1.23e-02 | 1.76e-03 |
| Monitor/module | 1-Methoxy-2-propanol | primary | 1.21e-02 | 1.74e-03 |
| Monitor/module | Titanium | primary | 1.16e-02 | 1.66e-03 |
| Panel components | Polyvinyl alcohol | primary | 8.61e-03 | 1.24e-03 |
| Panel components | Perchloric acid | primary | 7.64e-03 | 1.10e-03 |
| Monitor/module | 1-methyl-2-pyrrolidinone | primary | 7.37e-03 | 1.06e-03 |
| LCD glass mfg. | Hydrofluoric acid | primary | 7.33e-03 | 1.05e-03 |
| Monitor/module | Acetic acid | primary | 6.79e-03 | 9.76e-04 |
| Monitor/module | Propylene glycol | primary | 6.26e-03 | 9.00e-04 |
| Panel components | Hydrochloric acid | primary | 5.90e-03 | 8.47e-04 |
| PWB Mfg. | Glycol ethers | model/secondary | 5.89e-03 | 8.46e-04 |
| LCD glass mfg. | Zircon Sand | primary | 5.03e-03 | 7.23e-04 |
| Panel components | Toluene | primary | 4.60e-03 | 6.61e-04 |
| Panel components | Heptane | primary | 4.33e-03 | 6.22e-04 |
| Monitor/module | 2-ethoxyl ethylacetate | primary | 3.55e-03 | 5.10e-04 |
| LCD glass mfg. | Aluminum Oxide | primary | 3.12e-03 | 4.49e-04 |
| Monitor/module | Nitrous oxide | primary | 2.71e-03 | 3.90e-04 |
| Monitor/module | Perfluoromethane | primary | 2.57e-03 | 3.70e-04 |
| Monitor/module | Monosilane | primary | 2.25e-03 | 3.23e-04 |
| Panel components | Orthoboric acid | primary | 2.12e-03 | 3.05e-04 |
| Panel components | Hydrochloric acid | primary | 2.07e-03 | 2.97e-04 |
| Japanese Electric Grid | Uranium, yellowcake | model/secondary | 2.04e-03 | 2.94e-04 |
| Monitor/module | Cresol-formaldehyde resin | primary | 1.66e-03 | 2.38e-04 |
| Panel components | Acetone | primary | 1.22e-03 | 1.75e-04 |
| Monitor/module | Indium tin oxide | primary | 1.05e-03 | 1.51e-04 |
| Monitor/module | Polyethylene mono(nonylphenyl) ether glycol | primary | 9.39e-04 | 1.35e-04 |
| Panel components | Fuel oil #2 | primary | 8.15e-04 | 1.17e-04 |
| Panel components | 3,4-difluorobromobenzene | primary | 7.31e-04 | 1.05e-04 |
| Panel components | 4-pentylphenol | primary | 6.84e-04 | 9.83e-05 |
| Panel components | 4-bromophenol | primary | 6.53e-04 | 9.38e-05 |
| Monitor/module | LCD material (confidential) | primary | 6.21e-04 | 8.93e-05 |
| Monitor/module | 1,4-butanolide | primary | 5.31e-04 | 7.63e-05 |
| Panel components | 3,4,5-trifluorobromobenzene | primary | 5.29e-04 | 7.60e-05 |
| Monitor/module | Hexamethyldisilizane | primary | 5.16e-04 | 7.42e-05 |
| Panel components | 4-4(-propylcyclohexyl)cyclohexanone | primary | 4.35e-04 | 6.26e-05 |
| Panel components | 4-propionylphenol | primary | 3.89e-04 | 5.59e-05 |
| Monitor/module | Hydrogen peroxide | primary | 2.93e-04 | 4.22e-05 |
| Panel components | HCFC-225ca | primary | 2.74e-04 | 3.93e-05 |
| Panel components | HCFC-225cb | primary | 2.74e-04 | 3.93e-05 |
| Panel components | Borax | primary | 1.83e-04 | 2.62e-05 |
| Panel components | Cyclohexane | primary | 1.78e-04 | 2.56e-05 |
| Panel components | 4-ethylphenol | primary | 1.40e-04 | 2.01e-05 |
| Monitor/module | Xylene (mixed isomers) | primary | 1.04e-04 | 1.50e-05 |
| Backlight | Diethyl ether | primary | 9.50e-05 | 1.37e-05 |
| Panel components | Methyl ethyl ketone | primary | 4.61e-05 | 6.62e-06 |
| Monitor/module | Triallyl isocyanurate | primary | 3.09e-05 | 4.44e-06 |

## Table M-32. LCD LCIA Results for the Chronic Occupational Health Effects Impact Category

| Process Group | Materials | LCI Data Type | Chronic Occupational Toxicity (tox-kg) | % of Total |
|---|---|---|---|---|
| Monitor/module | 2,2,4-trimethylpentane | primary | 3.05e-05 | 4.38e-06 |
| US electric grid | Uranium, yellowcake | model/secondary | 1.88e-05 | 2.70e-06 |
| Monitor/module | Ammonium hydroxide | primary | 1.03e-05 | 1.48e-06 |
| Backlight | LNG | primary | 8.33e-06 | 1.20e-06 |
| Monitor/module | 2-(2-butoxyethoxy)-ethanol acetate | primary | 8.18e-06 | 1.18e-06 |
| Monitor/module | Sodium dihydrogen phosphate dihydrate | primary | 8.12e-06 | 1.17e-06 |
| Backlight | Mercury | primary | 3.99e-06 | 5.73e-07 |
| Monitor/module | Fluorocarbon resin | primary | 3.38e-06 | 4.86e-07 |
| Monitor/module | Cyclohexane | primary | 9.30e-07 | 1.34e-07 |
| Monitor/module | Methyl ethyl ketone | primary | 7.00e-07 | 1.01e-07 |
| Monitor/module | Aluminum (elemental) | primary | 1.70e-11 | 2.45e-12 |
| **Total Manufacturing** | | | **6.84e+02** | **9.83e+01** |
| **Use, Maintenance and Repair Life-cycle Stage** | | | | |
| US electric grid | Natural gas | model/secondary | 1.04e+01 | 1.50e+00 |
| US electric grid | Petroleum (in ground) | model/secondary | 2.84e+00 | 4.08e-01 |
| US electric grid | Uranium, yellowcake | model/secondary | 3.62e-03 | 5.20e-04 |
| **Total Use, Maintenance and Repair** | | | **1.33e+01** | **1.91e+00** |
| **End-of-life Life-cycle Stage** | | | | |
| LCD landfilling | Fuel oil #4 | primary | 9.29e-03 | 1.34e-03 |
| LCD recycling | Liquified petroleum gas ("propane") | primary | 2.76e-03 | 3.97e-04 |
| US electric grid | Uranium, yellowcake | model/secondary | 6.87e-07 | 9.87e-08 |
| LCD incineration | Fuel oil #4 | secondary | -1.95e+00 | -2.80e-01 |
| **Total End-of-life** | | | **-1.94e+00** | **-2.79e-01** |
| **Total All Life-cycle Stages** | | | **6.96e+02** | **1.00e+02** |

## Table M-33. CRT LCIA Results for the Chronic Public Health Effects Impact Category

| Process Group | Material | LCI Data Type | Chronic Public Toxicity (tox-kg) | % of Total |
|---|---|---|---|---|
| **Materials Processing Life-cycle Stage** | | | | |
| Invar | Sulfur dioxide | secondary | 1.65e+02 | 8.33e+00 |
| Steel Prod., cold-rolled, semi-finished | Sulfur dioxide | secondary | 2.54e+01 | 1.28e+00 |
| Aluminum Prod. | Sulfur dioxide | secondary | 1.38e+01 | 6.97e-01 |
| Polycarbonate Production | Sulfur dioxide | secondary | 7.93e+00 | 4.01e-01 |
| Lead | Sulfur dioxide | secondary | 4.57e+00 | 2.31e-01 |
| ABS Production | Sulfur dioxide | secondary | 2.80e+00 | 1.41e-01 |
| Ferrite mfg. | Sulfur dioxide | secondary | 2.35e+00 | 1.19e-01 |
| Lead | Arsenic | secondary | 2.21e+00 | 1.11e-01 |
| Polystyrene Prod., high-impact | Sulfur dioxide | secondary | 1.20e+00 | 6.05e-02 |
| Aluminum Prod. | Titanium tetrachloride | secondary | 7.20e-01 | 3.64e-02 |
| Steel Prod., cold-rolled, semi-finished | Carbon monoxide | secondary | 3.00e-01 | 1.51e-02 |
| Invar | Titanium tetrachloride | secondary | 2.56e-01 | 1.29e-02 |
| Lead | Titanium tetrachloride | secondary | 2.10e-01 | 1.06e-02 |
| Steel Prod., cold-rolled, semi-finished | PM | secondary | 2.10e-01 | 1.06e-02 |
| Aluminum Prod. | Manganese cmpds | secondary | 1.62e-01 | 8.18e-03 |
| Invar | Manganese cmpds | secondary | 1.50e-01 | 7.56e-03 |
| Aluminum Prod. | Vanadium | secondary | 1.07e-01 | 5.43e-03 |
| Ferrite mfg. | Manganese cmpds | secondary | 9.39e-02 | 4.74e-03 |
| Invar | Carbon monoxide | secondary | 7.60e-02 | 3.84e-03 |
| Invar | Vanadium | secondary | 7.40e-02 | 3.74e-03 |
| Ferrite mfg. | Carbon monoxide | secondary | 6.32e-02 | 3.19e-03 |
| Steel Prod., cold-rolled, semi-finished | Vanadium | secondary | 5.15e-02 | 2.60e-03 |
| Aluminum Prod. | Arsenic cmpds | secondary | 4.75e-02 | 2.40e-03 |
| Lead | Manganese cmpds | secondary | 4.60e-02 | 2.33e-03 |
| Polycarbonate Production | Carbon monoxide | secondary | 4.48e-02 | 2.27e-03 |
| Polycarbonate Production | Methane | secondary | 4.06e-02 | 2.05e-03 |
| Polycarbonate Production | Nitrogen dioxide | secondary | 3.88e-02 | 1.96e-03 |
| Invar | Arsenic | secondary | 3.21e-02 | 1.62e-03 |
| Ferrite mfg. | Arsenic | secondary | 2.90e-02 | 1.46e-03 |
| Steel Prod., cold-rolled, semi-finished | Nitrogen dioxide | secondary | 2.80e-02 | 1.41e-03 |
| Lead | Zinc (elemental) | secondary | 2.42e-02 | 1.22e-03 |
| Ferrite mfg. | Titanium tetrachloride | secondary | 2.36e-02 | 1.19e-03 |
| Invar | Zinc (elemental) | secondary | 2.28e-02 | 1.15e-03 |
| Ferrite mfg. | Zinc (elemental) | secondary | 2.21e-02 | 1.12e-03 |
| Steel Prod., cold-rolled, semi-finished | Methane | secondary | 2.18e-02 | 1.10e-03 |
| ABS Production | Carbon monoxide | secondary | 2.17e-02 | 1.10e-03 |
| Lead | Vanadium | secondary | 2.09e-02 | 1.06e-03 |
| Lead | Carbon monoxide | secondary | 2.04e-02 | 1.03e-03 |
| Steel Prod., cold-rolled, semi-finished | Fluorides (F-) | secondary | 1.92e-02 | 9.70e-04 |
| Aluminum Prod. | Carbon monoxide | secondary | 1.86e-02 | 9.41e-04 |
| Aluminum Prod. | PM | secondary | 1.78e-02 | 8.99e-04 |
| Styrene-butadiene Copolymer Prod. | Carbon monoxide | secondary | 1.73e-02 | 8.74e-04 |
| Invar | Arsenic cmpds | secondary | 1.69e-02 | 8.53e-04 |
| Aluminum Prod. | Methane | secondary | 1.61e-02 | 8.13e-04 |
| Steel Prod., cold-rolled, semi-finished | Manganese cmpds | secondary | 1.49e-02 | 7.53e-04 |
| Ferrite mfg. | Vanadium | secondary | 1.45e-02 | 7.33e-04 |
| Aluminum Prod. | Nitrogen dioxide | secondary | 1.43e-02 | 7.21e-04 |
| Styrene-butadiene Copolymer Prod. | Nitrogen oxides | secondary | 1.40e-02 | 7.07e-04 |
| Lead | Arsenic cmpds | secondary | 1.38e-02 | 6.98e-04 |

## Table M-33. CRT LCIA Results for the Chronic Public Health Effects Impact Category

| Process Group | Material | LCI Data Type | Chronic Public Toxicity (tox-kg) | % of Total |
|---|---|---|---|---|
| Styrene-butadiene Copolymer Prod. | Methane | secondary | 1.37e-02 | 6.94e-04 |
| Polycarbonate Production | PM | secondary | 1.29e-02 | 6.53e-04 |
| Invar | Methane | secondary | 1.15e-02 | 5.82e-04 |
| Styrene-butadiene Copolymer Prod. | Sulfur oxides | secondary | 1.14e-02 | 5.77e-04 |
| Aluminum Prod. | Barium cmpds | secondary | 1.04e-02 | 5.28e-04 |
| ABS Production | Methane | secondary | 1.02e-02 | 5.14e-04 |
| Invar | Nitrogen dioxide | secondary | 1.01e-02 | 5.12e-04 |
| ABS Production | Nitrogen dioxide | secondary | 9.32e-03 | 4.71e-04 |
| Lead | Nitrogen dioxide | secondary | 8.37e-03 | 4.23e-04 |
| Aluminum Prod. | Selenium | secondary | 6.29e-03 | 3.18e-04 |
| Ferrite mfg. | Methane | secondary | 5.71e-03 | 2.88e-04 |
| Invar | PM | secondary | 5.51e-03 | 2.78e-04 |
| Lead | Methane | secondary | 5.04e-03 | 2.55e-04 |
| Steel Prod., cold-rolled, semi-finished | Arsenic | secondary | 4.52e-03 | 2.28e-04 |
| Invar | Barium cmpds | secondary | 4.31e-03 | 2.18e-04 |
| Steel Prod., cold-rolled, semi-finished | Phosphorus (yellow or white) | secondary | 4.07e-03 | 2.06e-04 |
| Ferrite mfg. | Nitrogen dioxide | secondary | 4.05e-03 | 2.05e-04 |
| Polystyrene Prod., high-impact | Nitrogen dioxide | secondary | 3.63e-03 | 1.83e-04 |
| Ferrite mfg. | PM | secondary | 3.44e-03 | 1.74e-04 |
| Polystyrene Prod., high-impact | Methane | secondary | 3.33e-03 | 1.68e-04 |
| Aluminum Prod. | Aluminum (+3) | secondary | 3.18e-03 | 1.60e-04 |
| Lead | Lead | secondary | 3.16e-03 | 1.60e-04 |
| ABS Production | Hydrochloric acid | secondary | 2.93e-03 | 1.48e-04 |
| Lead | Barium cmpds | secondary | 2.71e-03 | 1.37e-04 |
| ABS Production | PM | secondary | 2.54e-03 | 1.28e-04 |
| Polystyrene Prod., high-impact | Carbon monoxide | secondary | 2.45e-03 | 1.24e-04 |
| Invar | Selenium | secondary | 2.32e-03 | 1.17e-04 |
| Steel Prod., cold-rolled, semi-finished | Hydrochloric acid | secondary | 2.05e-03 | 1.03e-04 |
| Styrene-butadiene Copolymer Prod. | PM | secondary | 1.99e-03 | 1.00e-04 |
| Invar | Hydrochloric acid | secondary | 1.85e-03 | 9.35e-05 |
| Lead | Selenium | secondary | 1.84e-03 | 9.27e-05 |
| Aluminum Prod. | Hydrochloric acid | secondary | 1.78e-03 | 9.02e-05 |
| Steel Prod., cold-rolled, semi-finished | Benzene | secondary | 1.76e-03 | 8.89e-05 |
| Steel Prod., cold-rolled, semi-finished | Barium cmpds | secondary | 1.73e-03 | 8.75e-05 |
| Lead | PM | secondary | 1.68e-03 | 8.50e-05 |
| Ferrite mfg. | Arsenic cmpds | secondary | 1.64e-03 | 8.28e-05 |
| ABS Production | Formaldehyde | secondary | 1.60e-03 | 8.09e-05 |
| Steel Prod., cold-rolled, semi-finished | Nitrous oxide | secondary | 1.55e-03 | 7.85e-05 |
| Steel Prod., cold-rolled, semi-finished | Arsenic cmpds | secondary | 1.54e-03 | 7.76e-05 |
| Steel Prod., cold-rolled, semi-finished | Ammonia | secondary | 1.26e-03 | 6.38e-05 |
| Aluminum Prod. | Cadmium cmpds | secondary | 1.17e-03 | 5.92e-05 |
| Invar | Aluminum (+3) | secondary | 1.14e-03 | 5.76e-05 |
| Lead | Hydrochloric acid | secondary | 1.07e-03 | 5.41e-05 |
| Steel Prod., cold-rolled, semi-finished | Silicon | secondary | 1.01e-03 | 5.12e-05 |
| Invar | Copper | secondary | 9.89e-04 | 4.99e-05 |
| Lead | Aluminum (+3) | secondary | 9.25e-04 | 4.67e-05 |
| Invar | Benzene | secondary | 9.18e-04 | 4.64e-05 |
| Steel Prod., cold-rolled, semi-finished | Titanium tetrachloride | secondary | 8.33e-04 | 4.21e-05 |
| Ferrite mfg. | Barium cmpds | secondary | 7.81e-04 | 3.95e-05 |

## Table M-33. CRT LCIA Results for the Chronic Public Health Effects Impact Category

| Process Group | Material | LCI Data Type | Chronic Public Toxicity (tox-kg) | % of Total |
|---|---|---|---|---|
| Ferrite mfg. | Hydrochloric acid | secondary | 6.93e-04 | 3.50e-05 |
| Polystyrene Prod., high-impact | PM | secondary | 6.05e-04 | 3.05e-05 |
| Ferrite mfg. | Benzene | secondary | 5.86e-04 | 2.96e-05 |
| Aluminum Prod. | Benzene | secondary | 5.70e-04 | 2.88e-05 |
| Steel Prod., cold-rolled, semi-finished | Ethane | secondary | 4.92e-04 | 2.48e-05 |
| ABS Production | Hydrofluoric acid | secondary | 4.87e-04 | 2.46e-05 |
| Aluminum Prod. | Hydrofluoric acid | secondary | 4.81e-04 | 2.43e-05 |
| Polycarbonate Production | Hydrochloric acid | secondary | 4.65e-04 | 2.35e-05 |
| Aluminum Prod. | Barium sulfate | secondary | 4.54e-04 | 2.29e-05 |
| Invar | Silicon | secondary | 4.52e-04 | 2.28e-05 |
| Steel Prod., cold-rolled, semi-finished | Formaldehyde | secondary | 4.15e-04 | 2.10e-05 |
| ABS Production | Aromatic hydrocarbons | secondary | 3.81e-04 | 1.93e-05 |
| Steel Prod., cold-rolled, semi-finished | Titanium | secondary | 3.30e-04 | 1.67e-05 |
| Polycarbonate Production | Sulfuric acid | secondary | 3.18e-04 | 1.60e-05 |
| ABS Production | Ammonia | secondary | 3.07e-04 | 1.55e-05 |
| Steel Prod., cold-rolled, semi-finished | Selenium | secondary | 3.00e-04 | 1.51e-05 |
| Lead | Benzene | secondary | 2.99e-04 | 1.51e-05 |
| Ferrite mfg. | Silicon | secondary | 2.97e-04 | 1.50e-05 |
| Invar | Phosphorus (yellow or white) | secondary | 2.89e-04 | 1.46e-05 |
| Ferrite mfg. | Selenium | secondary | 2.86e-04 | 1.44e-05 |
| Ferrite mfg. | Phosphorus (yellow or white) | secondary | 2.85e-04 | 1.44e-05 |
| Aluminum Prod. | Nitrous oxide | secondary | 2.76e-04 | 1.40e-05 |
| Aluminum Prod. | Perfluoromethane | secondary | 2.59e-04 | 1.31e-05 |
| Polycarbonate Production | Mercury compounds | secondary | 2.44e-04 | 1.23e-05 |
| ABS Production | Ethane | secondary | 2.37e-04 | 1.20e-05 |
| Aluminum Prod. | Titanium | secondary | 2.30e-04 | 1.16e-05 |
| Aluminum Prod. | Zinc (elemental) | secondary | 2.30e-04 | 1.16e-05 |
| Aluminum Prod. | Silicon | secondary | 2.19e-04 | 1.10e-05 |
| Steel Prod., cold-rolled, semi-finished | Zinc (elemental) | secondary | 2.16e-04 | 1.09e-05 |
| Invar | Titanium | secondary | 2.16e-04 | 1.09e-05 |
| Steel Prod., cold-rolled, semi-finished | Tin (Sn++, Sn4+) | secondary | 2.09e-04 | 1.05e-05 |
| Steel Prod., cold-rolled, semi-finished | Molybdenum | secondary | 1.88e-04 | 9.50e-06 |
| Aluminum Prod. | Copper (+1 & +2) | secondary | 1.80e-04 | 9.10e-06 |
| Aluminum Prod. | Strontium (Sr II) | secondary | 1.70e-04 | 8.57e-06 |
| Invar | Ethane | secondary | 1.65e-04 | 8.35e-06 |
| Polycarbonate Production | Aromatic hydrocarbons | secondary | 1.64e-04 | 8.30e-06 |
| Ferrite mfg. | Ethane | secondary | 1.61e-04 | 8.15e-06 |
| Invar | Formaldehyde | secondary | 1.60e-04 | 8.09e-06 |
| Ferrite mfg. | Formaldehyde | secondary | 1.56e-04 | 7.90e-06 |
| Invar | Molybdenum | secondary | 1.52e-04 | 7.69e-06 |
| ABS Production | Sulfuric acid | secondary | 1.46e-04 | 7.36e-06 |
| Lead | Silicon | secondary | 1.43e-04 | 7.20e-06 |
| Styrene-butadiene Copolymer Prod. | Sulfuric acid | secondary | 1.42e-04 | 7.19e-06 |
| Invar | Nitrates/nitrites | secondary | 1.37e-04 | 6.91e-06 |
| Styrene-butadiene Copolymer Prod. | Aromatic hydrocarbons | secondary | 1.36e-04 | 6.86e-06 |
| Invar | Cadmium cmpds | secondary | 1.27e-04 | 6.42e-06 |
| Steel Prod., cold-rolled, semi-finished | Barium | secondary | 1.23e-04 | 6.22e-06 |
| Lead | Barium sulfate | secondary | 1.15e-04 | 5.79e-06 |
| ABS Production | Mercury compounds | secondary | 1.12e-04 | 5.64e-06 |
| Ferrite mfg. | Aluminum (+3) | secondary | 1.12e-04 | 5.63e-06 |

## Table M-33. CRT LCIA Results for the Chronic Public Health Effects Impact Category

| Process Group | Material | LCI Data Type | Chronic Public Toxicity (tox-kg) | % of Total |
|---|---|---|---|---|
| Styrene-butadiene Copolymer Prod. | Mercury compounds | secondary | 1.09e-04 | 5.51e-06 |
| ABS Production | Aluminum (+3) | secondary | 1.02e-04 | 5.14e-06 |
| Steel Prod., cold-rolled, semi-finished | Antimony | secondary | 9.54e-05 | 4.82e-06 |
| Invar | Copper (+1 & +2) | secondary | 9.43e-05 | 4.77e-06 |
| Invar | Nickel | secondary | 9.29e-05 | 4.69e-06 |
| Ferrite mfg. | Titanium | secondary | 9.23e-05 | 4.66e-06 |
| Polycarbonate Production | Fluorides (F-) | secondary | 9.20e-05 | 4.65e-06 |
| Aluminum Prod. | Nitrate | secondary | 9.13e-05 | 4.61e-06 |
| Invar | Strontium (Sr II) | secondary | 8.79e-05 | 4.44e-06 |
| Steel Prod., cold-rolled, semi-finished | Boron | secondary | 8.57e-05 | 4.33e-06 |
| Steel Prod., cold-rolled, semi-finished | Strontium (Sr II) | secondary | 7.92e-05 | 4.00e-06 |
| Invar | Lead | secondary | 7.24e-05 | 3.66e-06 |
| Ferrite mfg. | Lead | secondary | 6.92e-05 | 3.50e-06 |
| Styrene-butadiene Copolymer Prod. | Hydrochloric acid | secondary | 6.82e-05 | 3.45e-06 |
| Invar | Barium | secondary | 6.53e-05 | 3.30e-06 |
| Lead | Ethane | secondary | 6.32e-05 | 3.19e-06 |
| Steel Prod., cold-rolled, semi-finished | Silver compounds | secondary | 6.17e-05 | 3.12e-06 |
| Invar | Tin (Sn++, Sn4+) | secondary | 6.07e-05 | 3.07e-06 |
| Polystyrene Prod., high-impact | Aromatic hydrocarbons | secondary | 6.05e-05 | 3.05e-06 |
| ABS Production | Nitrate | secondary | 6.01e-05 | 3.04e-06 |
| Steel Prod., cold-rolled, semi-finished | Nitrates/nitrites | secondary | 5.66e-05 | 2.86e-06 |
| Invar | Hydrofluoric acid | secondary | 5.37e-05 | 2.72e-06 |
| Ferrite mfg. | Molybdenum | secondary | 5.24e-05 | 2.65e-06 |
| Lead | Copper (+1 & +2) | secondary | 5.20e-05 | 2.63e-06 |
| Steel Prod., cold-rolled, semi-finished | Chromium (VI) | secondary | 5.17e-05 | 2.61e-06 |
| Invar | Ammonia | secondary | 5.01e-05 | 2.53e-06 |
| Invar | Zinc (+2) | secondary | 4.87e-05 | 2.46e-06 |
| Invar | Boron | secondary | 4.85e-05 | 2.45e-06 |
| Steel Prod., cold-rolled, semi-finished | Acetylene | secondary | 4.66e-05 | 2.35e-06 |
| Steel Prod., cold-rolled, semi-finished | Mercury compounds | secondary | 4.53e-05 | 2.29e-06 |
| Lead | Cadmium | secondary | 4.52e-05 | 2.29e-06 |
| Styrene-butadiene Copolymer Prod. | Fluorides (F-) | secondary | 4.12e-05 | 2.08e-06 |
| Lead | Nitrous oxide | secondary | 4.06e-05 | 2.05e-06 |
| Aluminum Prod. | Barium | secondary | 3.91e-05 | 1.98e-06 |
| Steel Prod., cold-rolled, semi-finished | Hydrofluoric acid | secondary | 3.79e-05 | 1.91e-06 |
| Ferrite mfg. | Barium | secondary | 3.73e-05 | 1.89e-06 |
| Ferrite mfg. | Zinc (+2) | secondary | 3.69e-05 | 1.86e-06 |
| Aluminum Prod. | Zinc (+2) | secondary | 3.48e-05 | 1.76e-06 |
| Invar | Barium sulfate | secondary | 3.46e-05 | 1.75e-06 |
| Steel Prod., cold-rolled, semi-finished | Barium sulfate | secondary | 3.43e-05 | 1.73e-06 |
| Lead | Strontium (Sr II) | secondary | 3.40e-05 | 1.72e-06 |
| Ferrite mfg. | Barium sulfate | secondary | 3.38e-05 | 1.71e-06 |
| Steel Prod., cold-rolled, semi-finished | Aluminum (+3) | secondary | 3.15e-05 | 1.59e-06 |
| Lead | Barium | secondary | 2.88e-05 | 1.46e-06 |
| Aluminum Prod. | Aromatic hydrocarbons | secondary | 2.83e-05 | 1.43e-06 |
| Lead | Copper | secondary | 2.82e-05 | 1.42e-06 |
| Lead | Hydrofluoric acid | secondary | 2.73e-05 | 1.38e-06 |
| Steel Prod., cold-rolled, semi-finished | Hydrogen sulfide | secondary | 2.72e-05 | 1.37e-06 |
| Aluminum Prod. | Nickel cmpds | secondary | 2.71e-05 | 1.37e-06 |
| Invar | Antimony | secondary | 2.70e-05 | 1.37e-06 |

## Table M-33. CRT LCIA Results for the Chronic Public Health Effects Impact Category

| Process Group | Material | LCI Data Type | Chronic Public Toxicity (tox-kg) | % of Total |
|---|---|---|---|---|
| Steel Prod., cold-rolled, semi-finished | Cadmium cmpds | secondary | 2.70e-05 | 1.36e-06 |
| Ferrite mfg. | Antimony | secondary | 2.64e-05 | 1.33e-06 |
| Ferrite mfg. | Boron | secondary | 2.58e-05 | 1.30e-06 |
| Ferrite mfg. | Strontium (Sr II) | secondary | 2.57e-05 | 1.30e-06 |
| Aluminum Prod. | Nickel | secondary | 2.52e-05 | 1.28e-06 |
| Steel Prod., cold-rolled, semi-finished | Aluminum (elemental) | secondary | 2.47e-05 | 1.25e-06 |
| Aluminum Prod. | Ammonia | secondary | 2.45e-05 | 1.24e-06 |
| Polystyrene Prod., high-impact | Hydrochloric acid | secondary | 2.42e-05 | 1.22e-06 |
| Aluminum Prod. | Copper | secondary | 2.38e-05 | 1.20e-06 |
| Invar | Nickel cmpds | secondary | 2.15e-05 | 1.09e-06 |
| Ferrite mfg. | Nitrous oxide | secondary | 2.12e-05 | 1.07e-06 |
| ABS Production | Hydrogen sulfide | secondary | 2.02e-05 | 1.02e-06 |
| Lead | Ammonia | secondary | 1.88e-05 | 9.49e-07 |
| Invar | Silver compounds | secondary | 1.86e-05 | 9.42e-07 |
| Ferrite mfg. | Silver compounds | secondary | 1.82e-05 | 9.20e-07 |
| Aluminum Prod. | Fluoride | secondary | 1.82e-05 | 9.19e-07 |
| Lead | Nitrate | secondary | 1.80e-05 | 9.10e-07 |
| Aluminum Prod. | Lead cmpds | secondary | 1.74e-05 | 8.81e-07 |
| Steel Prod., cold-rolled, semi-finished | Pentane | secondary | 1.70e-05 | 8.57e-07 |
| Invar | Aromatic hydrocarbons | secondary | 1.67e-05 | 8.44e-07 |
| Lead | Boron | secondary | 1.66e-05 | 8.37e-07 |
| Aluminum Prod. | Vanadium (V3+, V5+) | secondary | 1.63e-05 | 8.23e-07 |
| Ferrite mfg. | Ammonia | secondary | 1.62e-05 | 8.20e-07 |
| Invar | Aluminum (elemental) | secondary | 1.52e-05 | 7.70e-07 |
| Aluminum Prod. | Nitrites | secondary | 1.47e-05 | 7.40e-07 |
| Invar | Hydrogen sulfide | secondary | 1.45e-05 | 7.34e-07 |
| Invar | Chromium (VI) | secondary | 1.45e-05 | 7.31e-07 |
| Aluminum Prod. | Perfluoroethane | secondary | 1.44e-05 | 7.28e-07 |
| Steel Prod., cold-rolled, semi-finished | Aromatic hydrocarbons | secondary | 1.43e-05 | 7.24e-07 |
| Aluminum Prod. | Chromium (VI) | secondary | 1.39e-05 | 7.03e-07 |
| Invar | Cadmium | secondary | 1.34e-05 | 6.77e-07 |
| Invar | Acetylene | secondary | 1.32e-05 | 6.68e-07 |
| Ferrite mfg. | Acetylene | secondary | 1.29e-05 | 6.52e-07 |
| Ferrite mfg. | Hydrofluoric acid | secondary | 1.27e-05 | 6.44e-07 |
| Steel Prod., cold-rolled, semi-finished | Copper | secondary | 1.22e-05 | 6.17e-07 |
| Steel Prod., cold-rolled, semi-finished | Nickel | secondary | 1.16e-05 | 5.84e-07 |
| Ferrite mfg. | Cadmium | secondary | 1.11e-05 | 5.61e-07 |
| Aluminum Prod. | Aluminum (elemental) | secondary | 1.05e-05 | 5.32e-07 |
| Polycarbonate Production | Copper (+1 & +2) | secondary | 1.04e-05 | 5.24e-07 |
| Ferrite mfg. | Hydrogen sulfide | secondary | 1.03e-05 | 5.22e-07 |
| Lead | Zinc (+2) | secondary | 9.93e-06 | 5.02e-07 |
| Aluminum Prod. | Molybdenum (Mo II, Mo III, Mo IV, Mo V, Mo VI) | secondary | 9.88e-06 | 4.99e-07 |
| Polycarbonate Production | Phenol | secondary | 9.34e-06 | 4.72e-07 |
| Invar | Pentane | secondary | 8.97e-06 | 4.53e-07 |
| Lead | Fluoride | secondary | 8.91e-06 | 4.50e-07 |
| Steel Prod., cold-rolled, semi-finished | Hexane | secondary | 8.86e-06 | 4.48e-07 |
| Invar | Fluoride | secondary | 8.80e-06 | 4.45e-07 |
| Ferrite mfg. | Pentane | secondary | 8.76e-06 | 4.43e-07 |
| Steel Prod., cold-rolled, semi-finished | Copper (+1 & +2) | secondary | 8.59e-06 | 4.34e-07 |
| Lead | Aluminum (elemental) | secondary | 8.16e-06 | 4.12e-07 |

## Table M-33. CRT LCIA Results for the Chronic Public Health Effects Impact Category

| Process Group | Material | LCI Data Type | Chronic Public Toxicity (tox-kg) | % of Total |
|---|---|---|---|---|
| Ferrite mfg. | Nitrate | secondary | 8.08e-06 | 4.08e-07 |
| Lead | Nickel cmpds | secondary | 7.95e-06 | 4.01e-07 |
| Ferrite mfg. | Aluminum (elemental) | secondary | 7.77e-06 | 3.92e-07 |
| Invar | Benzo[a]pyrene | secondary | 7.72e-06 | 3.90e-07 |
| Aluminum Prod. | Hydrogen sulfide | secondary | 7.53e-06 | 3.80e-07 |
| Polycarbonate Production | Hydrofluoric acid | secondary | 7.39e-06 | 3.73e-07 |
| Aluminum Prod. | Acetic acid | secondary | 7.33e-06 | 3.71e-07 |
| Lead | Nickel | secondary | 6.71e-06 | 3.39e-07 |
| Ferrite mfg. | Chromium (VI) | secondary | 6.52e-06 | 3.30e-07 |
| Invar | Nitrites | secondary | 6.45e-06 | 3.26e-07 |
| Invar | Acetic acid | secondary | 6.08e-06 | 3.07e-07 |
| Invar | Vanadium (V3+, V5+) | secondary | 6.00e-06 | 3.03e-07 |
| Invar | Lead cmpds | secondary | 5.96e-06 | 3.01e-07 |
| Ferrite mfg. | Copper (+1 & +2) | secondary | 5.96e-06 | 3.01e-07 |
| Ferrite mfg. | Cadmium cmpds | secondary | 5.94e-06 | 3.00e-07 |
| Lead | Hydrogen sulfide | secondary | 5.93e-06 | 3.00e-07 |
| Polycarbonate Production | Ammonia | secondary | 5.86e-06 | 2.96e-07 |
| Lead | Chromium (VI) | secondary | 5.80e-06 | 2.93e-07 |
| Styrene-butadiene Copolymer Prod. | Nitrate | secondary | 5.79e-06 | 2.93e-07 |
| Lead | Lead cmpds | secondary | 5.50e-06 | 2.78e-07 |
| ABS Production | Heptane | secondary | 5.02e-06 | 2.53e-07 |
| ABS Production | Copper (+1 & +2) | secondary | 4.75e-06 | 2.40e-07 |
| Lead | Vanadium (V3+, V5+) | secondary | 4.75e-06 | 2.40e-07 |
| Styrene-butadiene Copolymer Prod. | Copper (+1 & +2) | secondary | 4.64e-06 | 2.35e-07 |
| Ferrite mfg. | Copper | secondary | 4.55e-06 | 2.30e-07 |
| Ferrite mfg. | Aromatic hydrocarbons | secondary | 4.52e-06 | 2.29e-07 |
| Steel Prod., cold-rolled, semi-finished | Bromine | secondary | 4.06e-06 | 2.05e-07 |
| Polycarbonate Production | Halogenated hydrocarbons (unspecified) | secondary | 3.69e-06 | 1.87e-07 |
| Polycarbonate Production | Hydrogen sulfide | secondary | 3.69e-06 | 1.87e-07 |
| Steel Prod., cold-rolled, semi-finished | Acetic acid | secondary | 3.56e-06 | 1.80e-07 |
| Invar | Molybdenum (Mo II, Mo III, Mo IV, Mo V, Mo VI) | secondary | 3.45e-06 | 1.74e-07 |
| Aluminum Prod. | Cadmium | secondary | 3.36e-06 | 1.70e-07 |
| Steel Prod., cold-rolled, semi-finished | Boric acid | secondary | 3.30e-06 | 1.67e-07 |
| Ferrite mfg. | Nickel | secondary | 3.26e-06 | 1.65e-07 |
| Lead | Nitrites | secondary | 3.10e-06 | 1.57e-07 |
| Steel Prod., cold-rolled, semi-finished | Strontium | secondary | 3.01e-06 | 1.52e-07 |
| Lead | Molybdenum (Mo II, Mo III, Mo IV, Mo V, Mo VI) | secondary | 2.99e-06 | 1.51e-07 |
| Invar | Cobalt (Co I, Co II, Co III) | secondary | 2.88e-06 | 1.46e-07 |
| Aluminum Prod. | Triethylene glycol | secondary | 2.69e-06 | 1.36e-07 |
| Invar | Hexane | secondary | 2.58e-06 | 1.30e-07 |
| Polystyrene Prod., high-impact | Ammonia | secondary | 2.56e-06 | 1.29e-07 |
| Ferrite mfg. | Hexane | secondary | 2.51e-06 | 1.27e-07 |
| Aluminum Prod. | Lead | secondary | 2.40e-06 | 1.21e-07 |
| Steel Prod., cold-rolled, semi-finished | Lead | secondary | 2.20e-06 | 1.11e-07 |
| Invar | Boron (B III) | secondary | 2.18e-06 | 1.10e-07 |
| Lead | Bromine | secondary | 2.16e-06 | 1.09e-07 |
| Invar | Triethylene glycol | secondary | 2.14e-06 | 1.08e-07 |
| Steel Prod., cold-rolled, semi-finished | Triethylene glycol | secondary | 2.12e-06 | 1.07e-07 |
| Ferrite mfg. | Triethylene glycol | secondary | 2.09e-06 | 1.05e-07 |
| Lead | Triethylene glycol | secondary | 2.01e-06 | 1.01e-07 |

## Table M-33. CRT LCIA Results for the Chronic Public Health Effects Impact Category

| Process Group | Material | LCI Data Type | Chronic Public Toxicity (tox-kg) | % of Total |
|---|---|---|---|---|
| Steel Prod., cold-rolled, semi-finished | Cadmium | secondary | 1.98e-06 | 1.00e-07 |
| Invar | Methanol | secondary | 1.87e-06 | 9.43e-08 |
| Polycarbonate Production | Chlorine | secondary | 1.85e-06 | 9.33e-08 |
| Ferrite mfg. | Fluoride | secondary | 1.85e-06 | 9.33e-08 |
| Lead | Cobalt (Co I, Co II, Co III) | secondary | 1.84e-06 | 9.28e-08 |
| Aluminum Prod. | Toluene | secondary | 1.81e-06 | 9.15e-08 |
| Steel Prod., cold-rolled, semi-finished | Lead cmpds | secondary | 1.77e-06 | 8.92e-08 |
| Steel Prod., cold-rolled, semi-finished | Uranium | secondary | 1.71e-06 | 8.65e-08 |
| Styrene-butadiene Copolymer Prod. | Aluminum (+3) | secondary | 1.65e-06 | 8.36e-08 |
| Invar | Strontium | secondary | 1.59e-06 | 8.04e-08 |
| Ferrite mfg. | Acetic acid | secondary | 1.52e-06 | 7.67e-08 |
| Steel Prod., cold-rolled, semi-finished | Toluene | secondary | 1.52e-06 | 7.67e-08 |
| Lead | Mercury | secondary | 1.51e-06 | 7.64e-08 |
| Invar | Bromium (Br) | secondary | 1.42e-06 | 7.16e-08 |
| Ferrite mfg. | Bromine | secondary | 1.38e-06 | 6.99e-08 |
| Aluminum Prod. | Xylene (mixed isomers) | secondary | 1.38e-06 | 6.96e-08 |
| Lead | Boron (B III) | secondary | 1.31e-06 | 6.63e-08 |
| ABS Production | Chlorine | secondary | 1.27e-06 | 6.42e-08 |
| Lead | Acetic acid | secondary | 1.27e-06 | 6.41e-08 |
| Steel Prod., cold-rolled, semi-finished | Ethylene | secondary | 1.23e-06 | 6.20e-08 |
| Steel Prod., cold-rolled, semi-finished | Cyanide (-1) | secondary | 1.21e-06 | 6.10e-08 |
| Steel Prod., cold-rolled, semi-finished | Methanol | secondary | 1.19e-06 | 6.03e-08 |
| Ferrite mfg. | Nickel cmpds | secondary | 1.13e-06 | 5.72e-08 |
| Steel Prod., cold-rolled, semi-finished | Xylene (mixed isomers) | secondary | 1.12e-06 | 5.67e-08 |
| Steel Prod., cold-rolled, semi-finished | Naphthalene | secondary | 1.11e-06 | 5.63e-08 |
| Invar | Toluene | secondary | 1.10e-06 | 5.55e-08 |
| Steel Prod., cold-rolled, semi-finished | Zinc (+2) | secondary | 1.06e-06 | 5.36e-08 |
| Ferrite mfg. | Lead cmpds | secondary | 1.04e-06 | 5.25e-08 |
| Steel Prod., cold-rolled, semi-finished | Phenol | secondary | 9.70e-07 | 4.90e-08 |
| Invar | Boric acid | secondary | 9.35e-07 | 4.72e-08 |
| Steel Prod., cold-rolled, semi-finished | Heptane | secondary | 9.33e-07 | 4.72e-08 |
| Polycarbonate Production | Aluminum (+3) | secondary | 9.23e-07 | 4.67e-08 |
| Polycarbonate Production | Ethanethiol | secondary | 9.23e-07 | 4.67e-08 |
| Polycarbonate Production | Lead | secondary | 9.23e-07 | 4.67e-08 |
| Polycarbonate Production | Nitrate | secondary | 9.23e-07 | 4.67e-08 |
| Polycarbonate Production | Nitrous oxide | secondary | 9.23e-07 | 4.67e-08 |
| Polycarbonate Production | Zinc (+2) | secondary | 9.23e-07 | 4.67e-08 |
| Ferrite mfg. | Boric acid | secondary | 9.13e-07 | 4.61e-08 |
| Lead | Manganese | secondary | 8.47e-07 | 4.28e-08 |
| Steel Prod., cold-rolled, semi-finished | Nickel cmpds | secondary | 8.46e-07 | 4.27e-08 |
| Ferrite mfg. | Strontium | secondary | 8.38e-07 | 4.23e-08 |
| Styrene-butadiene Copolymer Prod. | Chlorine | secondary | 8.27e-07 | 4.18e-08 |
| Styrene-butadiene Copolymer Prod. | Hydrofluoric acid | secondary | 8.27e-07 | 4.18e-08 |
| Aluminum Prod. | Cobalt | secondary | 8.23e-07 | 4.16e-08 |
| Steel Prod., cold-rolled, semi-finished | Cobalt | secondary | 8.10e-07 | 4.09e-08 |
| Lead | Mercury compounds | secondary | 7.89e-07 | 3.99e-08 |
| Invar | Xylene (mixed isomers) | secondary | 7.67e-07 | 3.88e-08 |
| Aluminum Prod. | Strontium | secondary | 7.60e-07 | 3.84e-08 |
| Steel Prod., cold-rolled, semi-finished | Beryllium | secondary | 7.21e-07 | 3.64e-08 |
| ABS Production | Nickel cmpds | secondary | 7.16e-07 | 3.62e-08 |

## Table M-33. CRT LCIA Results for the Chronic Public Health Effects Impact Category

| Process Group | Material | LCI Data Type | Chronic Public Toxicity (tox-kg) | % of Total |
|---|---|---|---|---|
| Ferrite mfg. | Vanadium (V3+, V5+) | secondary | 6.83e-07 | 3.45e-08 |
| Aluminum Prod. | Phenol | secondary | 6.39e-07 | 3.23e-08 |
| Invar | Manganese | secondary | 6.32e-07 | 3.19e-08 |
| Polystyrene Prod., high-impact | Nitrate | secondary | 6.05e-07 | 3.05e-08 |
| Invar | Ethylene | secondary | 6.01e-07 | 3.03e-08 |
| Steel Prod., cold-rolled, semi-finished | Vanadium (V3+, V5+) | secondary | 5.94e-07 | 3.00e-08 |
| ABS Production | Phenol | secondary | 5.88e-07 | 2.97e-08 |
| Ferrite mfg. | Ethylene | secondary | 5.79e-07 | 2.92e-08 |
| Styrene-butadiene Copolymer Prod. | Ammonia | secondary | 5.62e-07 | 2.84e-08 |
| Steel Prod., cold-rolled, semi-finished | Benzo[a]pyrene | secondary | 5.60e-07 | 2.83e-08 |
| Ferrite mfg. | Toluene | secondary | 5.31e-07 | 2.68e-08 |
| ABS Production | HALON-1301 | secondary | 5.12e-07 | 2.59e-08 |
| Styrene-butadiene Copolymer Prod. | Phenol | secondary | 4.92e-07 | 2.49e-08 |
| Invar | Uranium | secondary | 4.89e-07 | 2.47e-08 |
| Ferrite mfg. | Uranium | secondary | 4.77e-07 | 2.41e-08 |
| Steel Prod., cold-rolled, semi-finished | Boron (B III) | secondary | 4.70e-07 | 2.37e-08 |
| Polycarbonate Production | Mercury | secondary | 4.62e-07 | 2.33e-08 |
| Ferrite mfg. | Nitrites | secondary | 4.48e-07 | 2.26e-08 |
| Invar | Phenol | secondary | 4.41e-07 | 2.23e-08 |
| ABS Production | Ethanethiol | secondary | 4.24e-07 | 2.14e-08 |
| ABS Production | Fluoride | secondary | 4.24e-07 | 2.14e-08 |
| ABS Production | Halogenated hydrocarbons (unspecified) | secondary | 4.24e-07 | 2.14e-08 |
| ABS Production | Lead | secondary | 4.24e-07 | 2.14e-08 |
| ABS Production | Nitrous oxide | secondary | 4.24e-07 | 2.14e-08 |
| ABS Production | Zinc (+2) | secondary | 4.24e-07 | 2.14e-08 |
| Styrene-butadiene Copolymer Prod. | Halogenated hydrocarbons (unspecified) | secondary | 4.14e-07 | 2.09e-08 |
| Styrene-butadiene Copolymer Prod. | Hydrogen sulfide | secondary | 4.14e-07 | 2.09e-08 |
| Styrene-butadiene Copolymer Prod. | Lead | secondary | 4.14e-07 | 2.09e-08 |
| Styrene-butadiene Copolymer Prod. | Nitrous oxide | secondary | 4.14e-07 | 2.09e-08 |
| Styrene-butadiene Copolymer Prod. | Zinc (+2) | secondary | 4.14e-07 | 2.09e-08 |
| Aluminum Prod. | HALON-1301 | secondary | 3.61e-07 | 1.82e-08 |
| Steel Prod., cold-rolled, semi-finished | Manganese | secondary | 3.60e-07 | 1.82e-08 |
| Ferrite mfg. | Xylene (mixed isomers) | secondary | 3.50e-07 | 1.77e-08 |
| Ferrite mfg. | Methanol | secondary | 3.36e-07 | 1.70e-08 |
| Invar | Cyanide (-1) | secondary | 2.89e-07 | 1.46e-08 |
| Invar | Heptane | secondary | 2.83e-07 | 1.43e-08 |
| Invar | Acetaldehyde | secondary | 2.79e-07 | 1.41e-08 |
| Ferrite mfg. | Heptane | secondary | 2.76e-07 | 1.40e-08 |
| Lead | Xylene (mixed isomers) | secondary | 2.54e-07 | 1.29e-08 |
| Aluminum Prod. | 1,2-Dichlorotetrafluoroethane | secondary | 2.49e-07 | 1.26e-08 |
| Steel Prod., cold-rolled, semi-finished | Rubidium ion (Rb+) | secondary | 2.42e-07 | 1.22e-08 |
| Ferrite mfg. | Cobalt | secondary | 2.40e-07 | 1.21e-08 |
| Invar | Mercury | secondary | 2.12e-07 | 1.07e-08 |
| ABS Production | Mercury | secondary | 2.12e-07 | 1.07e-08 |
| Styrene-butadiene Copolymer Prod. | Mercury | secondary | 2.07e-07 | 1.05e-08 |
| Ferrite mfg. | Cyanide (-1) | secondary | 2.05e-07 | 1.04e-08 |
| Invar | Beryllium | secondary | 2.05e-07 | 1.04e-08 |
| Aluminum Prod. | Mercury | secondary | 2.02e-07 | 1.02e-08 |
| Ferrite mfg. | Beryllium | secondary | 2.00e-07 | 1.01e-08 |
| Ferrite mfg. | Phenol | secondary | 1.95e-07 | 9.87e-09 |

## Table M-33. CRT LCIA Results for the Chronic Public Health Effects Impact Category

| Process Group | Material | LCI Data Type | Chronic Public Toxicity (tox-kg) | % of Total |
|---|---|---|---|---|
| Aluminum Prod. | Cyanide (-1) | secondary | 1.89e-07 | 9.57e-09 |
| Steel Prod., cold-rolled, semi-finished | Molybdenum (Mo II, Mo III, Mo IV, Mo V, Mo VI) | secondary | 1.81e-07 | 9.17e-09 |
| Polystyrene Prod., high-impact | Phenol | secondary | 1.80e-07 | 9.09e-09 |
| Steel Prod., cold-rolled, semi-finished | Morpholine | secondary | 1.79e-07 | 9.05e-09 |
| Steel Prod., cold-rolled, semi-finished | Propylene | secondary | 1.77e-07 | 8.94e-09 |
| Ferrite mfg. | Cobalt (Co I, Co II, Co III) | secondary | 1.76e-07 | 8.88e-09 |
| Lead | Methanol | secondary | 1.62e-07 | 8.21e-09 |
| Steel Prod., cold-rolled, semi-finished | Acetaldehyde | secondary | 1.62e-07 | 8.18e-09 |
| Ferrite mfg. | Mercury | secondary | 1.62e-07 | 8.16e-09 |
| Ferrite mfg. | Benzo[a]pyrene | secondary | 1.55e-07 | 7.85e-09 |
| Ferrite mfg. | Boron (B III) | secondary | 1.55e-07 | 7.83e-09 |
| ABS Production | Ethylene | secondary | 1.52e-07 | 7.68e-09 |
| Invar | HALON-1301 | secondary | 1.52e-07 | 7.68e-09 |
| Lead | Cobalt | secondary | 1.46e-07 | 7.39e-09 |
| Lead | Phenol | secondary | 1.37e-07 | 6.94e-09 |
| Invar | Ethylbenzene | secondary | 1.37e-07 | 6.90e-09 |
| Invar | Acetone | secondary | 1.36e-07 | 6.88e-09 |
| Lead | Aromatic hydrocarbons | secondary | 1.36e-07 | 6.86e-09 |
| Aluminum Prod. | Chromium (III) | secondary | 1.31e-07 | 6.62e-09 |
| Ferrite mfg. | Manganese | secondary | 1.19e-07 | 6.00e-09 |
| Steel Prod., cold-rolled, semi-finished | Fluorine | secondary | 1.14e-07 | 5.78e-09 |
| Steel Prod., cold-rolled, semi-finished | Lanthanum | secondary | 1.07e-07 | 5.43e-09 |
| Invar | 1,2-Dichlorotetrafluoroethane | secondary | 1.03e-07 | 5.22e-09 |
| Lead | Cyanide (-1) | secondary | 9.76e-08 | 4.93e-09 |
| Invar | Nitrous oxide | secondary | 9.70e-08 | 4.90e-09 |
| Lead | Ethylene | secondary | 9.43e-08 | 4.77e-09 |
| Lead | Toluene | secondary | 8.24e-08 | 4.16e-09 |
| Steel Prod., cold-rolled, semi-finished | Acetone | secondary | 7.91e-08 | 3.99e-09 |
| Invar | Rubidium ion (Rb+) | secondary | 7.31e-08 | 3.69e-09 |
| Ferrite mfg. | Rubidium ion (Rb+) | secondary | 7.14e-08 | 3.61e-09 |
| Lead | HALON-1301 | secondary | 6.78e-08 | 3.42e-09 |
| Invar | Sulfuric acid | secondary | 5.99e-08 | 3.03e-09 |
| Ferrite mfg. | Sulfuric acid | secondary | 5.85e-08 | 2.95e-09 |
| Steel Prod., cold-rolled, semi-finished | Thorium | secondary | 5.77e-08 | 2.91e-09 |
| Invar | Mercury compounds | secondary | 5.58e-08 | 2.82e-09 |
| Ferrite mfg. | Mercury compounds | secondary | 5.45e-08 | 2.75e-09 |
| Steel Prod., cold-rolled, semi-finished | Ethylbenzene | secondary | 5.25e-08 | 2.65e-09 |
| Ferrite mfg. | Molybdenum (Mo II, Mo III, Mo IV, Mo V, Mo VI) | secondary | 5.09e-08 | 2.57e-09 |
| Invar | Morpholine | secondary | 5.07e-08 | 2.56e-09 |
| Steel Prod., cold-rolled, semi-finished | HALON-1301 | secondary | 5.04e-08 | 2.55e-09 |
| Invar | Propylene | secondary | 5.03e-08 | 2.54e-09 |
| Ferrite mfg. | Morpholine | secondary | 4.95e-08 | 2.50e-09 |
| Ferrite mfg. | Propylene | secondary | 4.91e-08 | 2.48e-09 |
| Invar | Chromium (III) | secondary | 4.79e-08 | 2.42e-09 |
| Lead | Ethylbenzene | secondary | 4.72e-08 | 2.39e-09 |
| Ferrite mfg. | Acetaldehyde | secondary | 4.63e-08 | 2.34e-09 |
| Lead | Chromium (III) | secondary | 3.86e-08 | 1.95e-09 |
| Lead | Acetaldehyde | secondary | 3.59e-08 | 1.81e-09 |
| Steel Prod., cold-rolled, semi-finished | Tin | secondary | 3.35e-08 | 1.69e-09 |
| Steel Prod., cold-rolled, semi-finished | Mercury | secondary | 3.26e-08 | 1.65e-09 |

## Table M-33. CRT LCIA Results for the Chronic Public Health Effects Impact Category

| Process Group | Material | LCI Data Type | Chronic Public Toxicity (tox-kg) | % of Total |
|---|---|---|---|---|
| Invar | Fluorine | secondary | 3.24e-08 | 1.64e-09 |
| Steel Prod., cold-rolled, semi-finished | Phosphorus pentoxide | secondary | 3.22e-08 | 1.63e-09 |
| Ferrite mfg. | Fluorine | secondary | 3.16e-08 | 1.60e-09 |
| Invar | Lanthanum | secondary | 3.06e-08 | 1.55e-09 |
| Ferrite mfg. | Lanthanum | secondary | 2.99e-08 | 1.51e-09 |
| Steel Prod., cold-rolled, semi-finished | Hydrazine | secondary | 2.65e-08 | 1.34e-09 |
| Steel Prod., cold-rolled, semi-finished | Scandium | secondary | 2.61e-08 | 1.32e-09 |
| Steel Prod., cold-rolled, semi-finished | Chlorine | secondary | 2.28e-08 | 1.15e-09 |
| Ferrite mfg. | Acetone | secondary | 2.23e-08 | 1.13e-09 |
| Ferrite mfg. | Ethylbenzene | secondary | 1.94e-08 | 9.80e-10 |
| Ferrite mfg. | HALON-1301 | secondary | 1.90e-08 | 9.62e-10 |
| Steel Prod., cold-rolled, semi-finished | Thallium | secondary | 1.78e-08 | 8.99e-10 |
| Lead | Acetone | secondary | 1.72e-08 | 8.67e-10 |
| Invar | Thorium | secondary | 1.65e-08 | 8.32e-10 |
| Ferrite mfg. | Thorium | secondary | 1.61e-08 | 8.12e-10 |
| Steel Prod., cold-rolled, semi-finished | Zirconium | secondary | 1.37e-08 | 6.94e-10 |
| Lead | Benzo[a]pyrene | secondary | 1.23e-08 | 6.22e-10 |
| Invar | Tin | secondary | 9.53e-09 | 4.82e-10 |
| Invar | Phosphorus pentoxide | secondary | 9.39e-09 | 4.74e-10 |
| Ferrite mfg. | Tin | secondary | 9.31e-09 | 4.70e-10 |
| Ferrite mfg. | Phosphorus pentoxide | secondary | 9.16e-09 | 4.63e-10 |
| Invar | Trichlorofluoromethane | secondary | 8.09e-09 | 4.09e-10 |
| Invar | Hydrogen cyanide | secondary | 7.58e-09 | 3.83e-10 |
| Invar | Hydrazine | secondary | 7.51e-09 | 3.79e-10 |
| Invar | Scandium | secondary | 7.47e-09 | 3.77e-10 |
| Ferrite mfg. | Hydrogen cyanide | secondary | 7.40e-09 | 3.74e-10 |
| Ferrite mfg. | Hydrazine | secondary | 7.33e-09 | 3.70e-10 |
| Ferrite mfg. | Scandium | secondary | 7.29e-09 | 3.68e-10 |
| Invar | Perfluoromethane | secondary | 5.70e-09 | 2.88e-10 |
| Steel Prod., cold-rolled, semi-finished | Nitrites | secondary | 5.63e-09 | 2.84e-10 |
| Ferrite mfg. | Perfluoromethane | secondary | 5.57e-09 | 2.81e-10 |
| Steel Prod., cold-rolled, semi-finished | Chromium (III) | secondary | 5.29e-09 | 2.67e-10 |
| Invar | Thallium | secondary | 5.10e-09 | 2.58e-10 |
| Ferrite mfg. | Chromium (III) | secondary | 5.01e-09 | 2.53e-10 |
| Ferrite mfg. | Thallium | secondary | 4.98e-09 | 2.52e-10 |
| Invar | Zirconium | secondary | 3.94e-09 | 1.99e-10 |
| Steel Prod., cold-rolled, semi-finished | Edetic acid (EDTA) | secondary | 3.86e-09 | 1.95e-10 |
| Ferrite mfg. | Zirconium | secondary | 3.84e-09 | 1.94e-10 |
| Invar | Hypochlorous acid | secondary | 3.54e-09 | 1.79e-10 |
| Steel Prod., cold-rolled, semi-finished | Hypochlorous acid | secondary | 3.52e-09 | 1.78e-10 |
| Ferrite mfg. | Hypochlorous acid | secondary | 3.46e-09 | 1.75e-10 |
| Steel Prod., cold-rolled, semi-finished | Cobalt (Co I, Co II, Co III) | secondary | 3.14e-09 | 1.59e-10 |
| Ferrite mfg. | Trichlorofluoromethane | secondary | 3.01e-09 | 1.52e-10 |
| ABS Production | HCFC-22 | secondary | 2.69e-09 | 1.36e-10 |
| Invar | HFC-125 | secondary | 2.30e-09 | 1.16e-10 |
| Ferrite mfg. | HFC-125 | secondary | 2.24e-09 | 1.13e-10 |
| Invar | Chlorine | secondary | 2.22e-09 | 1.12e-10 |
| Ferrite mfg. | Chlorine | secondary | 2.17e-09 | 1.10e-10 |
| Invar | Dichloromethane | secondary | 1.51e-09 | 7.61e-11 |
| Steel Prod., cold-rolled, semi-finished | Dichloromethane | secondary | 1.50e-09 | 7.55e-11 |

## Table M-33. CRT LCIA Results for the Chronic Public Health Effects Impact Category

| Process Group | Material | LCI Data Type | Chronic Public Toxicity (tox-kg) | % of Total |
|---|---|---|---|---|
| Ferrite mfg. | Dichloromethane | secondary | 1.47e-09 | 7.43e-11 |
| Invar | Dichlorodifluoromethane | secondary | 1.44e-09 | 7.27e-11 |
| Invar | Edetic acid (EDTA) | secondary | 1.09e-09 | 5.52e-11 |
| Ferrite mfg. | Edetic acid (EDTA) | secondary | 1.07e-09 | 5.39e-11 |
| Invar | CFC-13 | secondary | 1.01e-09 | 5.09e-11 |
| Steel Prod., cold-rolled, semi-finished | Isopropylpropionate | secondary | 4.05e-10 | 2.04e-11 |
| Ferrite mfg. | Isopropylpropionate | secondary | 3.97e-10 | 2.01e-11 |
| Invar | Halogenated matter (organic) | secondary | 2.74e-10 | 1.39e-11 |
| Ferrite mfg. | Halogenated matter (organic) | secondary | 2.68e-10 | 1.35e-11 |
| Steel Prod., cold-rolled, semi-finished | Lithium salts | secondary | 1.98e-10 | 1.00e-11 |
| Invar | Ethanethiol | secondary | 1.74e-10 | 8.80e-12 |
| Ferrite mfg. | Ethanethiol | secondary | 1.70e-10 | 8.59e-12 |
| Ferrite mfg. | Tin (Sn++, Sn4+) | secondary | 1.46e-10 | 7.36e-12 |
| Steel Prod., cold-rolled, semi-finished | Perfluoromethane | secondary | 8.98e-11 | 4.54e-12 |
| Invar | Lithium salts | secondary | 5.61e-11 | 2.84e-12 |
| Invar | Chloroform | secondary | 5.52e-11 | 2.79e-12 |
| Steel Prod., cold-rolled, semi-finished | Chloroform | secondary | 5.48e-11 | 2.77e-12 |
| Ferrite mfg. | Lithium salts | secondary | 5.48e-11 | 2.77e-12 |
| Ferrite mfg. | Chloroform | secondary | 5.39e-11 | 2.72e-12 |
| Lead | Acrolein | secondary | 2.38e-11 | 1.20e-12 |
| Lead | Benzaldehyde | secondary | 1.35e-11 | 6.81e-13 |
| Invar | Perfluoroethane | secondary | 5.35e-12 | 2.70e-13 |
| Invar | Trichloroethylene | secondary | 7.98e-13 | 4.03e-14 |
| Steel Prod., cold-rolled, semi-finished | Trichloroethylene | secondary | 7.91e-13 | 4.00e-14 |
| Ferrite mfg. | Trichloroethylene | secondary | 7.79e-13 | 3.94e-14 |
| Invar | Propionaldehyde | secondary | 2.08e-13 | 1.05e-14 |
| Steel Prod., cold-rolled, semi-finished | Propionaldehyde | secondary | 2.08e-13 | 1.05e-14 |
| Ferrite mfg. | Propionaldehyde | secondary | 2.03e-13 | 1.03e-14 |
| Steel Prod., cold-rolled, semi-finished | Benzaldehyde | secondary | 6.15e-14 | 3.11e-15 |
| Invar | Benzaldehyde | secondary | 6.10e-14 | 3.08e-15 |
| Ferrite mfg. | Benzaldehyde | secondary | 5.95e-14 | 3.01e-15 |
| Invar | Pentachlorobenzene | secondary | 2.77e-14 | 1.40e-15 |
| Steel Prod., cold-rolled, semi-finished | Tetrachloroethylene | secondary | 2.20e-14 | 1.11e-15 |
| Invar | Tetrachloroethylene | secondary | 2.17e-14 | 1.10e-15 |
| Ferrite mfg. | Tetrachloroethylene | secondary | 2.12e-14 | 1.07e-15 |
| Invar | Acrolein | secondary | 9.90e-15 | 5.00e-16 |
| Ferrite mfg. | 1,2-Dichlorotetrafluoroethane | secondary | 7.63e-15 | 3.86e-16 |
| Invar | 1,1,1-Trichloroethane | secondary | 3.25e-15 | 1.64e-16 |
| Steel Prod., cold-rolled, semi-finished | 1,1,1-Trichloroethane | secondary | 3.21e-15 | 1.62e-16 |
| Ferrite mfg. | 1,1,1-Trichloroethane | secondary | 3.16e-15 | 1.60e-16 |
| Invar | Pentachlorophenol | secondary | 1.55e-15 | 7.84e-17 |
| Invar | Hexachloroethane | secondary | 1.24e-16 | 6.27e-18 |
| Steel Prod., cold-rolled, semi-finished | Hexachloroethane | secondary | 1.23e-16 | 6.22e-18 |
| Ferrite mfg. | Hexachloroethane | secondary | 1.21e-16 | 6.12e-18 |
| Ferrite mfg. | Dichlorodifluoromethane | secondary | 1.07e-16 | 5.39e-18 |
| Ferrite mfg. | CFC-13 | secondary | 7.48e-17 | 3.78e-18 |
| Invar | HCFC-22 | secondary | 6.78e-17 | 3.43e-18 |
| Ferrite mfg. | HCFC-22 | secondary | 6.62e-17 | 3.35e-18 |
| **Total Materials Processing** | | | **2.28e+02** | **1.15e+01** |
| **Manufacturing Life-cycle Stage** | | | | |

## Table M-33. CRT LCIA Results for the Chronic Public Health Effects Impact Category

| Process Group | Material | LCI Data Type | Chronic Public Toxicity (tox-kg) | % of Total |
|---|---|---|---|---|
| Japanese Electric Grid | Sulfur dioxide | model/secondary | 5.69e+01 | 2.88e+00 |
| US electric grid | Sulfur dioxide | model/secondary | 2.63e+01 | 1.33e+00 |
| LPG Production | Carbon monoxide | secondary | 5.77e+00 | 2.92e-01 |
| LPG Production | Methane | secondary | 1.68e+00 | 8.48e-02 |
| LPG Production | Sulfur oxides | secondary | 1.60e+00 | 8.10e-02 |
| LPG Production | Nitrogen oxides | secondary | 1.15e+00 | 5.79e-02 |
| LPG Production | Vanadium | secondary | 1.05e+00 | 5.29e-02 |
| LPG Production | Benzene | secondary | 8.58e-01 | 4.34e-02 |
| Glass/frit | Fluorides (F-) | primary | 5.85e-01 | 2.96e-02 |
| LPG Production | PM | secondary | 2.58e-01 | 1.30e-02 |
| CRT tube mfg. | Carbon monoxide | primary | 2.29e-01 | 1.16e-02 |
| LPG Production | Arsenic | secondary | 2.06e-01 | 1.04e-02 |
| LPG Production | Formaldehyde | secondary | 1.34e-01 | 6.77e-03 |
| Natural Gas Prod. | Methane | secondary | 1.00e-01 | 5.07e-03 |
| Glass/frit | Nitrogen oxides | primary | 8.83e-02 | 4.46e-03 |
| Japanese Electric Grid | Nitrogen oxides | model/secondary | 8.13e-02 | 4.11e-03 |
| Natural Gas Prod. | Benzene | secondary | 7.57e-02 | 3.83e-03 |
| Natural Gas Prod. | Carbon monoxide | secondary | 6.87e-02 | 3.47e-03 |
| CRT monitor assembly | Tricresyl phosphate | primary | 4.59e-02 | 2.32e-03 |
| CRT tube mfg. | Phosphorus (yellow or white) | primary | 4.00e-02 | 2.02e-03 |
| Japanese Electric Grid | Carbon monoxide | model/secondary | 3.78e-02 | 1.91e-03 |
| US electric grid | Nitrogen oxides | model/secondary | 3.76e-02 | 1.90e-03 |
| LPG Production | Hydrochloric acid | secondary | 3.68e-02 | 1.86e-03 |
| LPG Production | Nitrous oxide | secondary | 3.24e-02 | 1.64e-03 |
| Fuel Oil #6 Prod. | Carbon monoxide | secondary | 2.83e-02 | 1.43e-03 |
| Japanese Electric Grid | Vanadium | model/secondary | 2.27e-02 | 1.15e-03 |
| US electric grid | Methane | model/secondary | 2.06e-02 | 1.04e-03 |
| CRT tube mfg. | Sulfur oxides | primary | 1.99e-02 | 1.01e-03 |
| Natural Gas Prod. | Nitrogen oxides | secondary | 1.86e-02 | 9.42e-04 |
| US electric grid | Carbon monoxide | model/secondary | 1.74e-02 | 8.80e-04 |
| Fuel Oil #2 Prod. | Carbon monoxide | secondary | 1.68e-02 | 8.50e-04 |
| Fuel Oil #6 Prod. | Methane | secondary | 1.18e-02 | 5.95e-04 |
| Fuel Oil #6 Prod. | Sulfur oxides | secondary | 1.09e-02 | 5.53e-04 |
| Fuel Oil #6 Prod. | Vanadium | secondary | 1.08e-02 | 5.44e-04 |
| Japanese Electric Grid | Arsenic | model/secondary | 1.04e-02 | 5.27e-04 |
| LPG Production | Phosphorus (yellow or white) | secondary | 9.81e-03 | 4.96e-04 |
| US electric grid | Arsenic | model/secondary | 8.91e-03 | 4.50e-04 |
| Fuel Oil #6 Prod. | Nitrogen oxides | secondary | 8.19e-03 | 4.14e-04 |
| US electric grid | Hydrochloric acid | model/secondary | 7.87e-03 | 3.98e-04 |
| LPG Production | Fluorides (F-) | secondary | 7.54e-03 | 3.81e-04 |
| LPG Production | Selenium | secondary | 7.41e-03 | 3.75e-04 |
| CRT tube mfg. | Fluoride | primary | 6.91e-03 | 3.49e-04 |
| Japanese Electric Grid | Hydrochloric acid | model/secondary | 6.28e-03 | 3.17e-04 |
| LPG Production | Hydrogen sulfide | secondary | 6.13e-03 | 3.10e-04 |
| LPG Production | Ammonia | secondary | 5.91e-03 | 2.99e-04 |
| Glass/frit | Fluorides (F-) | primary | 5.85e-03 | 2.95e-04 |
| Fuel Oil #2 Prod. | Methane | secondary | 5.14e-03 | 2.60e-04 |
| Fuel Oil #6 Prod. | Benzene | secondary | 4.90e-03 | 2.48e-04 |
| Fuel Oil #2 Prod. | Sulfur oxides | secondary | 4.87e-03 | 2.46e-04 |
| PWB Mfg. | Formaldehyde | model/secondary | 4.45e-03 | 2.25e-04 |

## Table M-33. CRT LCIA Results for the Chronic Public Health Effects Impact Category

| Process Group | Material | LCI Data Type | Chronic Public Toxicity (tox-kg) | % of Total |
|---|---|---|---|---|
| CRT tube mfg. | Nitrogen oxides | primary | 4.34e-03 | 2.19e-04 |
| Japanese Electric Grid | PM-10 | model/secondary | 4.00e-03 | 2.02e-04 |
| Fuel Oil #2 Prod. | Nitrogen oxides | secondary | 3.51e-03 | 1.78e-04 |
| Fuel Oil #2 Prod. | Vanadium | secondary | 3.45e-03 | 1.74e-04 |
| CRT tube mfg. | Dimethyl Formamide | primary | 3.07e-03 | 1.55e-04 |
| Fuel Oil #2 Prod. | Benzene | secondary | 2.55e-03 | 1.29e-04 |
| Glass/frit | Carbon monoxide | primary | 2.16e-03 | 1.09e-04 |
| LPG Production | Hydrofluoric acid | secondary | 2.01e-03 | 1.01e-04 |
| Fuel Oil #6 Prod. | PM | secondary | 1.85e-03 | 9.34e-05 |
| US electric grid | PM-10 | model/secondary | 1.84e-03 | 9.32e-05 |
| Fuel Oil #6 Prod. | Arsenic | secondary | 1.72e-03 | 8.72e-05 |
| CRT tube mfg. | Zinc (elemental) | primary | 1.65e-03 | 8.33e-05 |
| LPG Production | Molybdenum | secondary | 1.65e-03 | 8.33e-05 |
| LPG Production | Chromium (VI) | secondary | 1.58e-03 | 7.97e-05 |
| LPG Production | Ethane | secondary | 1.55e-03 | 7.84e-05 |
| Fuel Oil #4 Prod. | Carbon monoxide | secondary | 1.52e-03 | 7.66e-05 |
| US electric grid | Selenium | model/secondary | 1.48e-03 | 7.48e-05 |
| Fuel Oil #6 Prod. | Formaldehyde | secondary | 1.37e-03 | 6.92e-05 |
| Japanese Electric Grid | Fluorides (F-) | model/secondary | 1.32e-03 | 6.65e-05 |
| Japanese Electric Grid | Selenium | model/secondary | 1.27e-03 | 6.44e-05 |
| LPG Production | Zinc (elemental) | secondary | 1.20e-03 | 6.06e-05 |
| Japanese Electric Grid | Formaldehyde | model/secondary | 1.17e-03 | 5.91e-05 |
| US electric grid | Vanadium | model/secondary | 1.11e-03 | 5.63e-05 |
| Glass/frit | Nitrogen oxides | primary | 1.07e-03 | 5.39e-05 |
| LPG Production | Hexane | secondary | 9.02e-04 | 4.56e-05 |
| Natural Gas Prod. | PM | secondary | 8.28e-04 | 4.18e-05 |
| Fuel Oil #2 Prod. | PM | secondary | 7.92e-04 | 4.00e-05 |
| LPG Production | Phenol | secondary | 7.15e-04 | 3.61e-05 |
| Fuel Oil #2 Prod. | Arsenic | secondary | 6.52e-04 | 3.29e-05 |
| LPG Production | Pentane | secondary | 6.51e-04 | 3.29e-05 |
| CRT tube mfg. | Toluene | primary | 6.41e-04 | 3.24e-05 |
| Japanese Electric Grid | Zinc (elemental) | model/secondary | 6.13e-04 | 3.10e-05 |
| Natural Gas Prod. | Sulfur oxides | secondary | 5.51e-04 | 2.79e-05 |
| Fuel Oil #4 Prod. | Methane | secondary | 5.21e-04 | 2.63e-05 |
| Fuel Oil #4 Prod. | Sulfur oxides | secondary | 4.90e-04 | 2.48e-05 |
| LPG Production | PM-10 | secondary | 4.50e-04 | 2.27e-05 |
| Fuel Oil #2 Prod. | Formaldehyde | secondary | 4.41e-04 | 2.23e-05 |
| US electric grid | Hydrofluoric acid | model/secondary | 4.29e-04 | 2.17e-05 |
| Natural Gas Prod. | Ammonia | secondary | 4.26e-04 | 2.15e-05 |
| LPG Production | Nickel | secondary | 4.12e-04 | 2.08e-05 |
| Fuel Oil #4 Prod. | Vanadium | secondary | 4.03e-04 | 2.04e-05 |
| Fuel Oil #4 Prod. | Nitrogen oxides | secondary | 3.59e-04 | 1.81e-05 |
| Japanese Electric Grid | Hydrofluoric acid | model/secondary | 3.43e-04 | 1.73e-05 |
| Japanese Electric Grid | Antimony | model/secondary | 3.24e-04 | 1.64e-05 |
| Natural Gas Prod. | Arsenic | secondary | 3.15e-04 | 1.59e-05 |
| Fuel Oil #6 Prod. | Hydrochloric acid | secondary | 2.97e-04 | 1.50e-05 |
| Fuel Oil #6 Prod. | Nitrous oxide | secondary | 2.90e-04 | 1.47e-05 |
| LPG Production | Aluminum (+3) | secondary | 2.83e-04 | 1.43e-05 |
| CRT tube mfg. | Nickel | primary | 2.68e-04 | 1.35e-05 |
| Fuel Oil #4 Prod. | Benzene | secondary | 2.41e-04 | 1.22e-05 |

## Table M-33. CRT LCIA Results for the Chronic Public Health Effects Impact Category

| Process Group | Material | LCI Data Type | Chronic Public Toxicity (tox-kg) | % of Total |
|---|---|---|---|---|
| Japanese Electric Grid | Nitrous oxide | model/secondary | 2.24e-04 | 1.13e-05 |
| Glass/frit | PM | primary | 2.18e-04 | 1.10e-05 |
| LPG Production | Antimony | secondary | 2.14e-04 | 1.08e-05 |
| Japanese Electric Grid | Methane | model/secondary | 1.63e-04 | 8.22e-06 |
| US electric grid | Formaldehyde | model/secondary | 1.55e-04 | 7.82e-06 |
| Japanese Electric Grid | Molybdenum | model/secondary | 1.32e-04 | 6.65e-06 |
| LPG Production | Nitrate | secondary | 1.21e-04 | 6.12e-06 |
| Fuel Oil #2 Prod. | Hydrochloric acid | secondary | 1.15e-04 | 5.83e-06 |
| US electric grid | Benzene | model/secondary | 1.11e-04 | 5.63e-06 |
| US electric grid | Nitrous oxide | model/secondary | 1.08e-04 | 5.48e-06 |
| Fuel Oil #2 Prod. | Nitrous oxide | secondary | 1.04e-04 | 5.24e-06 |
| CRT tube mfg. | Molybdenum | primary | 1.02e-04 | 5.18e-06 |
| Glass/frit | Sulfur oxides | primary | 1.02e-04 | 5.14e-06 |
| Fuel Oil #6 Prod. | Phosphorus (yellow or white) | secondary | 9.77e-05 | 4.94e-06 |
| Japanese Electric Grid | Benzene | model/secondary | 9.11e-05 | 4.60e-06 |
| Glass/frit | Lead | primary | 8.74e-05 | 4.42e-06 |
| Fuel Oil #4 Prod. | PM | secondary | 8.09e-05 | 4.09e-06 |
| Fuel Oil #4 Prod. | Arsenic | secondary | 7.04e-05 | 3.56e-06 |
| Natural Gas Prod. | Vanadium | secondary | 6.96e-05 | 3.52e-06 |
| Natural Gas Prod. | Hydrochloric acid | secondary | 6.39e-05 | 3.23e-06 |
| Fuel Oil #6 Prod. | Hydrogen sulfide | secondary | 6.35e-05 | 3.21e-06 |
| US electric grid | Phosphorus (yellow or white) | model/secondary | 6.27e-05 | 3.17e-06 |
| Fuel Oil #6 Prod. | Selenium | secondary | 6.07e-05 | 3.07e-06 |
| Glass/frit | Carbon monoxide | primary | 6.03e-05 | 3.05e-06 |
| Fuel Oil #6 Prod. | Fluorides (F-) | secondary | 5.86e-05 | 2.96e-06 |
| Fuel Oil #4 Prod. | Formaldehyde | secondary | 5.14e-05 | 2.60e-06 |
| Japanese Electric Grid | Nickel | model/secondary | 4.98e-05 | 2.52e-06 |
| CRT tube mfg. | Copper | primary | 4.05e-05 | 2.04e-06 |
| LPG Production | Copper | secondary | 3.49e-05 | 1.76e-06 |
| LPG Production | Methyl hydrazine | secondary | 3.44e-05 | 1.74e-06 |
| LPG Production | Silicon | secondary | 3.38e-05 | 1.71e-06 |
| Glass/frit | Nitrates/nitrites | primary | 3.34e-05 | 1.69e-06 |
| LPG Production | 2-Chloroacetophenone | secondary | 3.22e-05 | 1.63e-06 |
| Fuel Oil #2 Prod. | Phosphorus (yellow or white) | secondary | 3.21e-05 | 1.62e-06 |
| LPG Production | Dimethylbenzanthracene | secondary | 3.19e-05 | 1.61e-06 |
| LPG Production | Bromomethane | secondary | 3.18e-05 | 1.61e-06 |
| Fuel Oil #6 Prod. | Ammonia | secondary | 3.18e-05 | 1.61e-06 |
| Japanese Electric Grid | Barium | model/secondary | 2.94e-05 | 1.48e-06 |
| US electric grid | Zinc (elemental) | model/secondary | 2.89e-05 | 1.46e-06 |
| Natural Gas Prod. | Formaldehyde | secondary | 2.77e-05 | 1.40e-06 |
| LPG Production | Naphthalene | secondary | 2.61e-05 | 1.32e-06 |
| CRT tube mfg. | Xylene (mixed isomers) | primary | 2.55e-05 | 1.29e-06 |
| LPG Production | Lead | secondary | 2.47e-05 | 1.25e-06 |
| US electric grid | Antimony | model/secondary | 2.37e-05 | 1.20e-06 |
| Fuel Oil #2 Prod. | Fluorides (F-) | secondary | 2.35e-05 | 1.19e-06 |
| Fuel Oil #2 Prod. | Selenium | secondary | 2.33e-05 | 1.18e-06 |
| Natural Gas Prod. | Nitrous oxide | secondary | 2.31e-05 | 1.17e-06 |
| LPG Production | Manganese | secondary | 2.23e-05 | 1.13e-06 |
| LPG Production | Beryllium | secondary | 2.15e-05 | 1.08e-06 |
| Fuel Oil #2 Prod. | Hydrogen sulfide | secondary | 2.02e-05 | 1.02e-06 |

## Table M-33. CRT LCIA Results for the Chronic Public Health Effects Impact Category

| Process Group | Material | LCI Data Type | Chronic Public Toxicity (tox-kg) | % of Total |
|---|---|---|---|---|
| LPG Production | Barium | secondary | 1.86e-05 | 9.42e-07 |
| Fuel Oil #2 Prod. | Ammonia | secondary | 1.74e-05 | 8.81e-07 |
| LPG Production | Cyanide (-1) | secondary | 1.67e-05 | 8.45e-07 |
| Japanese Electric Grid | Naphthalene | model/secondary | 1.66e-05 | 8.37e-07 |
| Fuel Oil #6 Prod. | Hydrofluoric acid | secondary | 1.62e-05 | 8.19e-07 |
| LPG Production | Barium cmpds | secondary | 1.59e-05 | 8.02e-07 |
| Fuel Oil #6 Prod. | Molybdenum | secondary | 1.56e-05 | 7.88e-07 |
| Natural Gas Prod. | Ethane | secondary | 1.40e-05 | 7.06e-07 |
| Natural Gas Prod. | Fluorides (F-) | secondary | 1.36e-05 | 6.87e-07 |
| Fuel Oil #4 Prod. | Hydrochloric acid | secondary | 1.23e-05 | 6.22e-07 |
| Natural Gas Prod. | Selenium | secondary | 1.21e-05 | 6.13e-07 |
| Fuel Oil #4 Prod. | Nitrous oxide | secondary | 1.15e-05 | 5.81e-07 |
| Japanese Electric Grid | Chromium (VI) | model/secondary | 9.99e-06 | 5.05e-07 |
| LPG Production | Cadmium | secondary | 9.21e-06 | 4.65e-07 |
| Fuel Oil #6 Prod. | Ethane | secondary | 8.87e-06 | 4.48e-07 |
| US electric grid | Chromium (VI) | model/secondary | 8.58e-06 | 4.33e-07 |
| Natural Gas Prod. | Zinc (elemental) | secondary | 8.50e-06 | 4.30e-07 |
| Natural Gas Prod. | Hexane | secondary | 8.11e-06 | 4.10e-07 |
| US electric grid | Molybdenum | model/secondary | 7.93e-06 | 4.01e-07 |
| US electric grid | Methyl hydrazine | model/secondary | 7.36e-06 | 3.72e-07 |
| Japanese Electric Grid | Copper | model/secondary | 7.14e-06 | 3.61e-07 |
| US electric grid | 2-Chloroacetophenone | model/secondary | 6.89e-06 | 3.48e-07 |
| LPG Production | Carbon disulfide | secondary | 6.85e-06 | 3.46e-07 |
| US electric grid | Bromomethane | model/secondary | 6.81e-06 | 3.44e-07 |
| Fuel Oil #6 Prod. | Zinc (elemental) | secondary | 6.59e-06 | 3.33e-07 |
| Fuel Oil #6 Prod. | Chromium (VI) | secondary | 6.39e-06 | 3.23e-07 |
| Fuel Oil #2 Prod. | Hydrofluoric acid | secondary | 6.30e-06 | 3.18e-07 |
| CRT tube mfg. | Lead | primary | 6.03e-06 | 3.05e-07 |
| Japanese Electric Grid | Methyl hydrazine | model/secondary | 5.88e-06 | 2.97e-07 |
| Natural Gas Prod. | Pentane | secondary | 5.86e-06 | 2.96e-07 |
| Japanese Electric Grid | 2-Chloroacetophenone | model/secondary | 5.51e-06 | 2.78e-07 |
| Japanese Electric Grid | Bromomethane | model/secondary | 5.44e-06 | 2.75e-07 |
| Fuel Oil #2 Prod. | Molybdenum | secondary | 5.33e-06 | 2.69e-07 |
| LPG Production | Benzyl chloride | secondary | 5.24e-06 | 2.65e-07 |
| Fuel Oil #6 Prod. | Hexane | secondary | 5.16e-06 | 2.61e-07 |
| LPG Production | Cobalt | secondary | 5.02e-06 | 2.54e-07 |
| Fuel Oil #6 Prod. | PM-10 | secondary | 4.66e-06 | 2.36e-07 |
| Fuel Oil #2 Prod. | Ethane | secondary | 4.61e-06 | 2.33e-07 |
| Fuel Oil #6 Prod. | Nickel | secondary | 3.99e-06 | 2.02e-07 |
| LPG Production | Aluminum (elemental) | secondary | 3.87e-06 | 1.96e-07 |
| Fuel Oil #6 Prod. | Pentane | secondary | 3.72e-06 | 1.88e-07 |
| Fuel Oil #4 Prod. | Phosphorus (yellow or white) | secondary | 3.70e-06 | 1.87e-07 |
| US electric grid | Nickel | model/secondary | 3.70e-06 | 1.87e-07 |
| LPG Production | Chloroform | secondary | 3.70e-06 | 1.87e-07 |
| CRT tube mfg. | Manganese | primary | 3.60e-06 | 1.82e-07 |
| US electric grid | Cyanide (-1) | model/secondary | 3.58e-06 | 1.81e-07 |
| Fuel Oil #2 Prod. | Zinc (elemental) | secondary | 3.54e-06 | 1.79e-07 |
| Natural Gas Prod. | Hydrofluoric acid | secondary | 3.49e-06 | 1.76e-07 |
| LPG Production | Propionaldehyde | secondary | 3.42e-06 | 1.73e-07 |
| Japanese Electric Grid | Cyanide (-1) | model/secondary | 2.86e-06 | 1.44e-07 |

## Table M-33. CRT LCIA Results for the Chronic Public Health Effects Impact Category

| Process Group | Material | LCI Data Type | Chronic Public Toxicity (tox-kg) | % of Total |
|---|---|---|---|---|
| US electric grid | 2,3,7,8-TCDD | model/secondary | 2.71e-06 | 1.37e-07 |
| Fuel Oil #2 Prod. | Hexane | secondary | 2.68e-06 | 1.35e-07 |
| Fuel Oil #4 Prod. | Selenium | secondary | 2.50e-06 | 1.26e-07 |
| Fuel Oil #2 Prod. | Chromium (VI) | secondary | 2.48e-06 | 1.25e-07 |
| Fuel Oil #4 Prod. | Fluorides (F-) | secondary | 2.47e-06 | 1.25e-07 |
| Fuel Oil #6 Prod. | Phenol | secondary | 2.42e-06 | 1.22e-07 |
| Fuel Oil #4 Prod. | Hydrogen sulfide | secondary | 2.37e-06 | 1.20e-07 |
| Japanese Electric Grid | Cobalt | model/secondary | 2.37e-06 | 1.20e-07 |
| Natural Gas Prod. | Molybdenum | secondary | 2.31e-06 | 1.17e-07 |
| Japanese Electric Grid | 2,3,7,8-TCDD | model/secondary | 2.23e-06 | 1.12e-07 |
| US electric grid | Naphthalene | model/secondary | 2.19e-06 | 1.10e-07 |
| Fuel Oil #2 Prod. | Phenol | secondary | 2.01e-06 | 1.01e-07 |
| LPG Production | Acrolein | secondary | 1.94e-06 | 9.80e-08 |
| Fuel Oil #2 Prod. | Pentane | secondary | 1.93e-06 | 9.77e-08 |
| US electric grid | Barium | model/secondary | 1.86e-06 | 9.39e-08 |
| Natural Gas Prod. | Phosphorus (yellow or white) | secondary | 1.77e-06 | 8.94e-08 |
| Fuel Oil #4 Prod. | Ammonia | secondary | 1.62e-06 | 8.17e-08 |
| LPG Production | Methyl chloride | secondary | 1.61e-06 | 8.13e-08 |
| Japanese Electric Grid | Cadmium | model/secondary | 1.60e-06 | 8.09e-08 |
| Fuel Oil #2 Prod. | PM-10 | secondary | 1.48e-06 | 7.50e-08 |
| Natural Gas Prod. | Chromium (VI) | secondary | 1.48e-06 | 7.47e-08 |
| US electric grid | Carbon disulfide | model/secondary | 1.46e-06 | 7.40e-08 |
| Fuel Oil #2 Prod. | Nickel | secondary | 1.34e-06 | 6.77e-08 |
| Glass/frit | PM | primary | 1.33e-06 | 6.74e-08 |
| Fuel Oil #6 Prod. | Antimony | secondary | 1.19e-06 | 6.00e-08 |
| Japanese Electric Grid | Carbon disulfide | model/secondary | 1.17e-06 | 5.91e-08 |
| LPG Production | Di(2-ethylhexyl)phthalate | secondary | 1.16e-06 | 5.86e-08 |
| US electric grid | Benzyl chloride | model/secondary | 1.12e-06 | 5.67e-08 |
| Fuel Oil #6 Prod. | Aluminum (+3) | secondary | 9.58e-07 | 4.84e-08 |
| LPG Production | Acetaldehyde | secondary | 9.23e-07 | 4.67e-08 |
| Japanese Electric Grid | Benzyl chloride | model/secondary | 8.95e-07 | 4.52e-08 |
| US electric grid | Cadmium | model/secondary | 8.74e-07 | 4.42e-08 |
| LPG Production | Mercury | secondary | 8.69e-07 | 4.39e-08 |
| Fuel Oil #2 Prod. | Aluminum (+3) | secondary | 7.95e-07 | 4.02e-08 |
| US electric grid | Chloroform | model/secondary | 7.91e-07 | 4.00e-08 |
| US electric grid | Propionaldehyde | model/secondary | 7.31e-07 | 3.69e-08 |
| US electric grid | Manganese | model/secondary | 7.28e-07 | 3.68e-08 |
| LPG Production | Cadmium cmpds | secondary | 6.95e-07 | 3.51e-08 |
| Fuel Oil #4 Prod. | Hydrofluoric acid | secondary | 6.72e-07 | 3.39e-08 |
| LPG Production | Dimethyl sulfate | secondary | 6.42e-07 | 3.25e-08 |
| Fuel Oil #2 Prod. | Antimony | secondary | 6.34e-07 | 3.20e-08 |
| Japanese Electric Grid | Chloroform | model/secondary | 6.31e-07 | 3.19e-08 |
| US electric grid | Fluoride | model/secondary | 6.23e-07 | 3.15e-08 |
| LPG Production | Toluene | secondary | 6.23e-07 | 3.15e-08 |
| CRT tube mfg. | Cyanide (-1) | primary | 6.06e-07 | 3.06e-08 |
| Fuel Oil #4 Prod. | Molybdenum | secondary | 6.03e-07 | 3.05e-08 |
| Japanese Electric Grid | Propionaldehyde | model/secondary | 5.84e-07 | 2.95e-08 |
| Glass/frit | Zinc (elemental) | primary | 5.55e-07 | 2.81e-08 |
| Japanese Electric Grid | Beryllium | model/secondary | 4.94e-07 | 2.50e-08 |
| Fuel Oil #6 Prod. | Nitrate | secondary | 4.85e-07 | 2.45e-08 |

## Table M-33. CRT LCIA Results for the Chronic Public Health Effects Impact Category

| Process Group | Material | LCI Data Type | Chronic Public Toxicity (tox-kg) | % of Total |
|---|---|---|---|---|
| US electric grid | Beryllium | model/secondary | 4.65e-07 | 2.35e-08 |
| Natural Gas Prod. | Antimony | secondary | 4.46e-07 | 2.25e-08 |
| Glass/frit | Chromium | primary | 4.41e-07 | 2.23e-08 |
| Fuel Oil #4 Prod. | Ethane | secondary | 4.36e-07 | 2.20e-08 |
| US electric grid | Acrolein | model/secondary | 4.15e-07 | 2.10e-08 |
| US electric grid | Lead | model/secondary | 4.07e-07 | 2.06e-08 |
| US electric grid | Cobalt | model/secondary | 3.88e-07 | 1.96e-08 |
| LPG Production | 1,4-Dichlorobenzene | secondary | 3.62e-07 | 1.83e-08 |
| US electric grid | Copper | model/secondary | 3.57e-07 | 1.80e-08 |
| Fuel Oil #6 Prod. | Silicon | secondary | 3.50e-07 | 1.77e-08 |
| Fuel Oil #2 Prod. | Nitrate | secondary | 3.45e-07 | 1.74e-08 |
| US electric grid | Methyl chloride | model/secondary | 3.44e-07 | 1.74e-08 |
| Japanese Electric Grid | Acrolein | model/secondary | 3.31e-07 | 1.67e-08 |
| Fuel Oil #4 Prod. | Zinc (elemental) | secondary | 3.31e-07 | 1.67e-08 |
| Fuel Oil #6 Prod. | Copper | secondary | 3.17e-07 | 1.60e-08 |
| LPG Production | Isophorone | secondary | 3.10e-07 | 1.57e-08 |
| Natural Gas Prod. | Dimethylbenzanthracene | secondary | 2.87e-07 | 1.45e-08 |
| LPG Production | Aromatic hydrocarbons | secondary | 2.80e-07 | 1.42e-08 |
| Fuel Oil #6 Prod. | Methyl hydrazine | secondary | 2.78e-07 | 1.40e-08 |
| Glass/frit | Nickel | primary | 2.77e-07 | 1.40e-08 |
| Japanese Electric Grid | Methyl chloride | model/secondary | 2.75e-07 | 1.39e-08 |
| Fuel Oil #4 Prod. | Chromium (VI) | secondary | 2.64e-07 | 1.34e-08 |
| Fuel Oil #6 Prod. | 2-Chloroacetophenone | secondary | 2.60e-07 | 1.31e-08 |
| Fuel Oil #6 Prod. | Bromomethane | secondary | 2.57e-07 | 1.30e-08 |
| Fuel Oil #4 Prod. | Hexane | secondary | 2.53e-07 | 1.28e-08 |
| LPG Production | Methyl ethyl ketone | secondary | 2.48e-07 | 1.26e-08 |
| US electric grid | Di(2-ethylhexyl)phthalate | model/secondary | 2.48e-07 | 1.25e-08 |
| LPG Production | Tetrachloroethylene | secondary | 2.46e-07 | 1.24e-08 |
| Japanese Electric Grid | Toluene | model/secondary | 2.39e-07 | 1.21e-08 |
| LPG Production | 1,2-Dichloroethane | secondary | 2.18e-07 | 1.10e-08 |
| LPG Production | Methyl methacrylate | secondary | 2.12e-07 | 1.07e-08 |
| Fuel Oil #6 Prod. | Lead | secondary | 2.00e-07 | 1.01e-08 |
| Japanese Electric Grid | Di(2-ethylhexyl)phthalate | model/secondary | 1.98e-07 | 1.00e-08 |
| US electric grid | Acetaldehyde | model/secondary | 1.98e-07 | 9.98e-09 |
| US electric grid | Hexane | model/secondary | 1.92e-07 | 9.69e-09 |
| LPG Production | Styrene | secondary | 1.88e-07 | 9.48e-09 |
| Fuel Oil #4 Prod. | Pentane | secondary | 1.83e-07 | 9.24e-09 |
| Fuel Oil #6 Prod. | Dimethylbenzanthracene | secondary | 1.82e-07 | 9.22e-09 |
| Fuel Oil #6 Prod. | Manganese | secondary | 1.79e-07 | 9.04e-09 |
| LPG Production | Bromoform | secondary | 1.75e-07 | 8.85e-09 |
| Natural Gas Prod. | Nickel | secondary | 1.74e-07 | 8.81e-09 |
| Fuel Oil #4 Prod. | PM-10 | secondary | 1.74e-07 | 8.79e-09 |
| LPG Production | Dichloromethane | secondary | 1.73e-07 | 8.74e-09 |
| LPG Production | Chromium (III) | secondary | 1.72e-07 | 8.67e-09 |
| Fuel Oil #6 Prod. | Beryllium | secondary | 1.71e-07 | 8.64e-09 |
| Fuel Oil #4 Prod. | Phenol | secondary | 1.63e-07 | 8.24e-09 |
| Fuel Oil #6 Prod. | Naphthalene | secondary | 1.58e-07 | 8.00e-09 |
| Japanese Electric Grid | Acetaldehyde | model/secondary | 1.58e-07 | 7.97e-09 |
| Japanese Electric Grid | Hexane | model/secondary | 1.53e-07 | 7.74e-09 |
| Fuel Oil #4 Prod. | Nickel | secondary | 1.53e-07 | 7.73e-09 |
| LPG Production | Chlorobenzene | secondary | 1.40e-07 | 7.08e-09 |

## Table M-33. CRT LCIA Results for the Chronic Public Health Effects Impact Category

| Process Group | Material | LCI Data Type | Chronic Public Toxicity (tox-kg) | % of Total |
|---|---|---|---|---|
| US electric grid | Dimethyl sulfate | model/secondary | 1.37e-07 | 6.94e-09 |
| Fuel Oil #6 Prod. | Cyanide (-1) | secondary | 1.35e-07 | 6.82e-09 |
| Natural Gas Prod. | Hydrogen sulfide | secondary | 1.35e-07 | 6.80e-09 |
| Natural Gas Prod. | Naphthalene | secondary | 1.32e-07 | 6.66e-09 |
| LPG Production | Copper (+1 & +2) | secondary | 1.31e-07 | 6.62e-09 |
| US electric grid | Mercury | model/secondary | 1.20e-07 | 6.06e-09 |
| Japanese Electric Grid | Mercury | model/secondary | 1.18e-07 | 5.97e-09 |
| LPG Production | 2,4-Dinitrotoluene | secondary | 1.12e-07 | 5.68e-09 |
| Fuel Oil #2 Prod. | Copper | secondary | 1.12e-07 | 5.65e-09 |
| Fuel Oil #2 Prod. | Silicon | secondary | 1.12e-07 | 5.64e-09 |
| Japanese Electric Grid | Dimethyl sulfate | model/secondary | 1.10e-07 | 5.54e-09 |
| Fuel Oil #2 Prod. | Methyl hydrazine | secondary | 1.08e-07 | 5.45e-09 |
| LPG Production | Acetophenone | secondary | 1.03e-07 | 5.21e-09 |
| Fuel Oil #2 Prod. | 2-Chloroacetophenone | secondary | 1.01e-07 | 5.11e-09 |
| Fuel Oil #2 Prod. | Bromomethane | secondary | 9.99e-08 | 5.05e-09 |
| Fuel Oil #6 Prod. | Barium | secondary | 9.97e-08 | 5.04e-09 |
| Fuel Oil #2 Prod. | Dimethylbenzanthracene | secondary | 9.48e-08 | 4.79e-09 |
| Fuel Oil #2 Prod. | Naphthalene | secondary | 7.83e-08 | 3.95e-09 |
| Fuel Oil #2 Prod. | Lead | secondary | 7.76e-08 | 3.92e-09 |
| Fuel Oil #6 Prod. | Cadmium | secondary | 7.24e-08 | 3.66e-09 |
| Fuel Oil #2 Prod. | Manganese | secondary | 7.00e-08 | 3.53e-09 |
| LPG Production | o-xylene | secondary | 6.86e-08 | 3.47e-09 |
| US electric grid | Toluene | model/secondary | 6.78e-08 | 3.43e-09 |
| Fuel Oil #2 Prod. | Beryllium | secondary | 6.72e-08 | 3.39e-09 |
| US electric grid | Isophorone | model/secondary | 6.64e-08 | 3.36e-09 |
| Fuel Oil #4 Prod. | Aluminum (+3) | secondary | 6.46e-08 | 3.26e-09 |
| Natural Gas Prod. | Methyl hydrazine | secondary | 5.97e-08 | 3.01e-09 |
| Fuel Oil #4 Prod. | Antimony | secondary | 5.94e-08 | 3.00e-09 |
| Natural Gas Prod. | Barium | secondary | 5.90e-08 | 2.98e-09 |
| Natural Gas Prod. | 2-Chloroacetophenone | secondary | 5.59e-08 | 2.82e-09 |
| LPG Production | Ethylbenzene | secondary | 5.56e-08 | 2.81e-09 |
| Natural Gas Prod. | Bromomethane | secondary | 5.52e-08 | 2.79e-09 |
| Fuel Oil #6 Prod. | Carbon disulfide | secondary | 5.52e-08 | 2.79e-09 |
| Fuel Oil #2 Prod. | Barium | secondary | 5.49e-08 | 2.77e-09 |
| Fuel Oil #6 Prod. | Barium cmpds | secondary | 5.37e-08 | 2.71e-09 |
| US electric grid | Methyl ethyl ketone | model/secondary | 5.32e-08 | 2.69e-09 |
| Japanese Electric Grid | Isophorone | model/secondary | 5.30e-08 | 2.68e-09 |
| Glass/frit | Barium | primary | 5.29e-08 | 2.67e-09 |
| Natural Gas Prod. | Copper | secondary | 5.28e-08 | 2.67e-09 |
| US electric grid | Tetrachloroethylene | model/secondary | 5.25e-08 | 2.65e-09 |
| Fuel Oil #2 Prod. | Cyanide (-1) | secondary | 5.25e-08 | 2.65e-09 |
| US electric grid | 1,2-Dichloroethane | model/secondary | 4.67e-08 | 2.36e-09 |
| US electric grid | Methyl methacrylate | model/secondary | 4.54e-08 | 2.30e-09 |
| Fuel Oil #2 Prod. | Barium cmpds | secondary | 4.45e-08 | 2.25e-09 |
| Natural Gas Prod. | Lead | secondary | 4.33e-08 | 2.19e-09 |
| Natural Gas Prod. | Beryllium | secondary | 4.27e-08 | 2.16e-09 |
| Fuel Oil #6 Prod. | Cobalt | secondary | 4.25e-08 | 2.14e-09 |
| Japanese Electric Grid | Methyl ethyl ketone | model/secondary | 4.24e-08 | 2.14e-09 |
| Fuel Oil #6 Prod. | Benzyl chloride | secondary | 4.23e-08 | 2.14e-09 |
| Japanese Electric Grid | Tetrachloroethylene | model/secondary | 4.19e-08 | 2.12e-09 |

## Table M-33. CRT LCIA Results for the Chronic Public Health Effects Impact Category

| Process Group | Material | LCI Data Type | Chronic Public Toxicity (tox-kg) | % of Total |
|---|---|---|---|---|
| US electric grid | Styrene | model/secondary | 4.01e-08 | 2.03e-09 |
| Fuel Oil #6 Prod. | Aluminum (elemental) | secondary | 4.01e-08 | 2.03e-09 |
| Natural Gas Prod. | Manganese | secondary | 3.95e-08 | 2.00e-09 |
| US electric grid | Bromoform | model/secondary | 3.75e-08 | 1.89e-09 |
| Japanese Electric Grid | 1,2-Dichloroethane | model/secondary | 3.73e-08 | 1.88e-09 |
| US electric grid | Dichloromethane | model/secondary | 3.70e-08 | 1.87e-09 |
| Japanese Electric Grid | Methyl methacrylate | model/secondary | 3.63e-08 | 1.83e-09 |
| Japanese Electric Grid | Styrene | model/secondary | 3.20e-08 | 1.62e-09 |
| Natural Gas Prod. | Nitrate | secondary | 3.01e-08 | 1.52e-09 |
| US electric grid | Chlorobenzene | model/secondary | 3.00e-08 | 1.51e-09 |
| Japanese Electric Grid | Bromoform | model/secondary | 2.99e-08 | 1.51e-09 |
| Fuel Oil #6 Prod. | Chloroform | secondary | 2.98e-08 | 1.51e-09 |
| Japanese Electric Grid | Dichloromethane | model/secondary | 2.95e-08 | 1.49e-09 |
| Fuel Oil #4 Prod. | Nitrate | secondary | 2.93e-08 | 1.48e-09 |
| Natural Gas Prod. | Cyanide (-1) | secondary | 2.90e-08 | 1.47e-09 |
| Fuel Oil #2 Prod. | Cadmium | secondary | 2.88e-08 | 1.45e-09 |
| LPG Production | Methyl tert-butyl ether | secondary | 2.79e-08 | 1.41e-09 |
| Fuel Oil #6 Prod. | Propionaldehyde | secondary | 2.76e-08 | 1.39e-09 |
| US electric grid | 2,4-Dinitrotoluene | model/secondary | 2.40e-08 | 1.21e-09 |
| Japanese Electric Grid | Chlorobenzene | model/secondary | 2.39e-08 | 1.21e-09 |
| LPG Production | Zinc (+2) | secondary | 2.35e-08 | 1.19e-09 |
| LPG Production | Phenanthrene | secondary | 2.27e-08 | 1.15e-09 |
| US electric grid | Acetophenone | model/secondary | 2.21e-08 | 1.12e-09 |
| Fuel Oil #2 Prod. | Carbon disulfide | secondary | 2.15e-08 | 1.09e-09 |
| LPG Production | Vinyl acetate | secondary | 1.98e-08 | 1.00e-09 |
| Japanese Electric Grid | Cumene hydroperoxide | model/secondary | 1.95e-08 | 9.84e-10 |
| LPG Production | 3-Methylcholanthrene | secondary | 1.92e-08 | 9.70e-10 |
| Japanese Electric Grid | 2,4-Dinitrotoluene | model/secondary | 1.91e-08 | 9.67e-10 |
| LPG Production | Ethylene dibromide | secondary | 1.84e-08 | 9.30e-10 |
| Japanese Electric Grid | Acetophenone | model/secondary | 1.76e-08 | 8.91e-10 |
| Fuel Oil #2 Prod. | Benzyl chloride | secondary | 1.64e-08 | 8.31e-10 |
| Natural Gas Prod. | Cadmium | secondary | 1.60e-08 | 8.06e-10 |
| Fuel Oil #2 Prod. | Cobalt | secondary | 1.59e-08 | 8.03e-10 |
| Fuel Oil #6 Prod. | Acrolein | secondary | 1.57e-08 | 7.91e-10 |
| Natural Gas Prod. | Phenol | secondary | 1.46e-08 | 7.37e-10 |
| Glass/frit | Copper | primary | 1.42e-08 | 7.18e-10 |
| Fuel Oil #4 Prod. | Silicon | secondary | 1.31e-08 | 6.61e-10 |
| Fuel Oil #6 Prod. | Methyl chloride | secondary | 1.30e-08 | 6.56e-10 |
| Fuel Oil #2 Prod. | Aluminum (elemental) | secondary | 1.28e-08 | 6.45e-10 |
| Fuel Oil #4 Prod. | Copper | secondary | 1.25e-08 | 6.30e-10 |
| LPG Production | 2-Methylnaphthalene | secondary | 1.20e-08 | 6.07e-10 |
| Natural Gas Prod. | Carbon disulfide | secondary | 1.19e-08 | 6.00e-10 |
| US electric grid | Ethylbenzene | model/secondary | 1.18e-08 | 5.97e-10 |
| Fuel Oil #2 Prod. | Chloroform | secondary | 1.16e-08 | 5.86e-10 |
| Fuel Oil #4 Prod. | Methyl hydrazine | secondary | 1.15e-08 | 5.81e-10 |
| Fuel Oil #4 Prod. | 2-Chloroacetophenone | secondary | 1.08e-08 | 5.45e-10 |
| Fuel Oil #2 Prod. | Propionaldehyde | secondary | 1.07e-08 | 5.41e-10 |
| Fuel Oil #4 Prod. | Bromomethane | secondary | 1.07e-08 | 5.38e-10 |
| LPG Production | Chlorine | secondary | 1.06e-08 | 5.38e-10 |
| Japanese Electric Grid | Ethylbenzene | model/secondary | 1.04e-08 | 5.25e-10 |
| Natural Gas Prod. | PM-10 | secondary | 9.88e-09 | 4.99e-10 |

## Table M-33. CRT LCIA Results for the Chronic Public Health Effects Impact Category

| Process Group | Material | LCI Data Type | Chronic Public Toxicity (tox-kg) | % of Total |
|---|---|---|---|---|
| Fuel Oil #6 Prod. | Di(2-ethylhexyl)phthalate | secondary | 9.36e-09 | 4.73e-10 |
| Natural Gas Prod. | Benzyl chloride | secondary | 9.09e-09 | 4.59e-10 |
| Fuel Oil #4 Prod. | Dimethylbenzanthracene | secondary | 8.97e-09 | 4.53e-10 |
| Natural Gas Prod. | Toluene | secondary | 8.63e-09 | 4.36e-10 |
| Fuel Oil #4 Prod. | Lead | secondary | 8.28e-09 | 4.18e-10 |
| LPG Production | 1,1,1-Trichloroethane | secondary | 7.57e-09 | 3.82e-10 |
| Fuel Oil #4 Prod. | Naphthalene | secondary | 7.55e-09 | 3.81e-10 |
| Fuel Oil #6 Prod. | Acetaldehyde | secondary | 7.45e-09 | 3.76e-10 |
| Fuel Oil #4 Prod. | Manganese | secondary | 7.44e-09 | 3.76e-10 |
| Fuel Oil #4 Prod. | Beryllium | secondary | 7.13e-09 | 3.60e-10 |
| LPG Production | Acenaphthene | secondary | 7.03e-09 | 3.55e-10 |
| Fuel Oil #6 Prod. | Mercury | secondary | 6.94e-09 | 3.51e-10 |
| Natural Gas Prod. | Chloroform | secondary | 6.41e-09 | 3.24e-10 |
| Fuel Oil #2 Prod. | Acrolein | secondary | 6.09e-09 | 3.08e-10 |
| US electric grid | Methyl tert-butyl ether | model/secondary | 5.96e-09 | 3.01e-10 |
| Natural Gas Prod. | Propionaldehyde | secondary | 5.93e-09 | 2.99e-10 |
| Japanese Electric Grid | Acenaphthene | model/secondary | 5.79e-09 | 2.92e-10 |
| Natural Gas Prod. | Aluminum (+3) | secondary | 5.72e-09 | 2.89e-10 |
| Fuel Oil #4 Prod. | Cyanide (-1) | secondary | 5.60e-09 | 2.83e-10 |
| LPG Production | Ethyl Chloride | secondary | 5.36e-09 | 2.71e-10 |
| Natural Gas Prod. | Cobalt | secondary | 5.28e-09 | 2.67e-10 |
| Japanese Electric Grid | Phenanthrene | model/secondary | 5.21e-09 | 2.63e-10 |
| Fuel Oil #6 Prod. | Dimethyl sulfate | secondary | 5.18e-09 | 2.62e-10 |
| Fuel Oil #4 Prod. | Barium | secondary | 5.08e-09 | 2.57e-10 |
| Fuel Oil #2 Prod. | Methyl chloride | secondary | 5.05e-09 | 2.55e-10 |
| Japanese Electric Grid | Methyl tert-butyl ether | model/secondary | 4.75e-09 | 2.40e-10 |
| Natural Gas Prod. | o-xylene | secondary | 4.60e-09 | 2.32e-10 |
| US electric grid | Phenol | model/secondary | 4.54e-09 | 2.30e-10 |
| LPG Production | Cumene | secondary | 4.54e-09 | 2.29e-10 |
| Japanese Electric Grid | Chromium (III) | model/secondary | 4.48e-09 | 2.26e-10 |
| LPG Production | Benzo[a]pyrene | secondary | 4.28e-09 | 2.16e-10 |
| US electric grid | Vinyl acetate | model/secondary | 4.25e-09 | 2.15e-10 |
| Fuel Oil #6 Prod. | Toluene | secondary | 4.19e-09 | 2.12e-10 |
| US electric grid | Phenanthrene | model/secondary | 4.00e-09 | 2.02e-10 |
| US electric grid | Ethylene dibromide | model/secondary | 3.94e-09 | 1.99e-10 |
| Japanese Electric Grid | 1,1,1-Trichloroethane | model/secondary | 3.66e-09 | 1.85e-10 |
| Fuel Oil #2 Prod. | Di(2-ethylhexyl)phthalate | secondary | 3.64e-09 | 1.84e-10 |
| Japanese Electric Grid | Phenol | model/secondary | 3.63e-09 | 1.83e-10 |
| Fuel Oil #4 Prod. | Barium cmpds | secondary | 3.62e-09 | 1.83e-10 |
| US electric grid | Xylene (mixed isomers) | model/secondary | 3.52e-09 | 1.78e-10 |
| Japanese Electric Grid | Vinyl acetate | model/secondary | 3.38e-09 | 1.71e-10 |
| Natural Gas Prod. | Acrolein | secondary | 3.37e-09 | 1.70e-10 |
| Natural Gas Prod. | 1,4-Dichlorobenzene | secondary | 3.26e-09 | 1.65e-10 |
| US electric grid | Chromium (III) | model/secondary | 3.15e-09 | 1.59e-10 |
| Japanese Electric Grid | Ethylene dibromide | model/secondary | 3.14e-09 | 1.59e-10 |
| Fuel Oil #4 Prod. | Cadmium | secondary | 3.04e-09 | 1.53e-10 |
| Fuel Oil #2 Prod. | Acetaldehyde | secondary | 2.90e-09 | 1.46e-10 |
| Japanese Electric Grid | Xylene (mixed isomers) | model/secondary | 2.81e-09 | 1.42e-10 |
| Natural Gas Prod. | Methyl chloride | secondary | 2.79e-09 | 1.41e-10 |
| Fuel Oil #2 Prod. | Mercury | secondary | 2.72e-09 | 1.37e-10 |

## Table M-33. CRT LCIA Results for the Chronic Public Health Effects Impact Category

| Process Group | Material | LCI Data Type | Chronic Public Toxicity (tox-kg) | % of Total |
|---|---|---|---|---|
| LPG Production | Biphenyl | secondary | 2.71e-09 | 1.37e-10 |
| Fuel Oil #6 Prod. | Isophorone | secondary | 2.50e-09 | 1.27e-10 |
| Fuel Oil #6 Prod. | Cadmium cmpds | secondary | 2.35e-09 | 1.19e-10 |
| LPG Production | Lead cmpds | secondary | 2.33e-09 | 1.18e-10 |
| Fuel Oil #4 Prod. | Carbon disulfide | secondary | 2.29e-09 | 1.16e-10 |
| LPG Production | Dibenzo[a,h]anthracene | secondary | 2.23e-09 | 1.12e-10 |
| LPG Production | Acenaphthylene | secondary | 2.14e-09 | 1.08e-10 |
| LPG Production | Anthracene | secondary | 2.11e-09 | 1.07e-10 |
| Fuel Oil #6 Prod. | 1,4-Dichlorobenzene | secondary | 2.07e-09 | 1.05e-10 |
| Fuel Oil #2 Prod. | Dimethyl sulfate | secondary | 2.02e-09 | 1.02e-10 |
| Natural Gas Prod. | Di(2-ethylhexyl)phthalate | secondary | 2.01e-09 | 1.02e-10 |
| Fuel Oil #6 Prod. | Methyl ethyl ketone | secondary | 2.00e-09 | 1.01e-10 |
| Fuel Oil #6 Prod. | Tetrachloroethylene | secondary | 1.98e-09 | 1.00e-10 |
| LPG Production | Nickel cmpds | secondary | 1.97e-09 | 9.96e-11 |
| Fuel Oil #2 Prod. | Cadmium cmpds | secondary | 1.95e-09 | 9.85e-11 |
| LPG Production | Benzo[a]anthracene | secondary | 1.91e-09 | 9.63e-11 |
| Fuel Oil #2 Prod. | Toluene | secondary | 1.90e-09 | 9.58e-11 |
| Natural Gas Prod. | Mercury | secondary | 1.88e-09 | 9.51e-11 |
| US electric grid | 2,3,7,8-TCDF | model/secondary | 1.86e-09 | 9.41e-11 |
| Japanese Electric Grid | Dibenzo[a,h]anthracene | model/secondary | 1.86e-09 | 9.37e-11 |
| Glass/frit | Nickel | primary | 1.80e-09 | 9.11e-11 |
| Fuel Oil #6 Prod. | 1,2-Dichloroethane | secondary | 1.76e-09 | 8.90e-11 |
| Fuel Oil #4 Prod. | Benzyl chloride | secondary | 1.75e-09 | 8.86e-11 |
| US electric grid | 1,1,1-Trichloroethane | model/secondary | 1.73e-09 | 8.74e-11 |
| Fuel Oil #4 Prod. | Cobalt | secondary | 1.72e-09 | 8.71e-11 |
| Fuel Oil #6 Prod. | Methyl methacrylate | secondary | 1.71e-09 | 8.66e-11 |
| Natural Gas Prod. | Acetaldehyde | secondary | 1.60e-09 | 8.09e-11 |
| Fuel Oil #6 Prod. | Styrene | secondary | 1.51e-09 | 7.65e-11 |
| Fuel Oil #4 Prod. | Aluminum (elemental) | secondary | 1.50e-09 | 7.56e-11 |
| Japanese Electric Grid | 2,3,7,8-TCDF | model/secondary | 1.49e-09 | 7.53e-11 |
| LPG Production | Benzo[b,j,k]fluoranthene | secondary | 1.47e-09 | 7.44e-11 |
| LPG Production | Indeno(1,2,3-cd)pyrene | secondary | 1.42e-09 | 7.16e-11 |
| Fuel Oil #6 Prod. | Bromoform | secondary | 1.41e-09 | 7.14e-11 |
| Fuel Oil #6 Prod. | Dichloromethane | secondary | 1.40e-09 | 7.05e-11 |
| Japanese Electric Grid | o-xylene | model/secondary | 1.28e-09 | 6.48e-11 |
| Fuel Oil #4 Prod. | Chloroform | secondary | 1.24e-09 | 6.25e-11 |
| Japanese Electric Grid | Benzo[a]anthracene | model/secondary | 1.22e-09 | 6.17e-11 |
| US electric grid | Acenaphthene | model/secondary | 1.21e-09 | 6.14e-11 |
| LPG Production | Chrysene | secondary | 1.20e-09 | 6.08e-11 |
| US electric grid | Ethyl Chloride | model/secondary | 1.15e-09 | 5.80e-11 |
| Fuel Oil #4 Prod. | Propionaldehyde | secondary | 1.14e-09 | 5.77e-11 |
| Fuel Oil #6 Prod. | Chlorobenzene | secondary | 1.13e-09 | 5.71e-11 |
| Natural Gas Prod. | Dimethyl sulfate | secondary | 1.11e-09 | 5.63e-11 |
| Fuel Oil #2 Prod. | 1,4-Dichlorobenzene | secondary | 1.08e-09 | 5.44e-11 |
| Natural Gas Prod. | Zinc (+2) | secondary | 1.05e-09 | 5.30e-11 |
| LPG Production | HALON-1301 | secondary | 1.02e-09 | 5.13e-11 |
| Fuel Oil #2 Prod. | Isophorone | secondary | 9.74e-10 | 4.92e-11 |
| US electric grid | Cumene | model/secondary | 9.71e-10 | 4.90e-11 |
| Fuel Oil #6 Prod. | Aromatic hydrocarbons | secondary | 9.47e-10 | 4.79e-11 |
| Natural Gas Prod. | Chlorine | secondary | 9.46e-10 | 4.78e-11 |

## Table M-33. CRT LCIA Results for the Chronic Public Health Effects Impact Category

| Process Group | Material | LCI Data Type | Chronic Public Toxicity (tox-kg) | % of Total |
|---|---|---|---|---|
| Glass/frit | Chromium | primary | 9.33e-10 | 4.72e-11 |
| Japanese Electric Grid | Ethyl Chloride | model/secondary | 9.16e-10 | 4.63e-11 |
| Fuel Oil #6 Prod. | 2,4-Dinitrotoluene | secondary | 9.07e-10 | 4.58e-11 |
| Fuel Oil #6 Prod. | Acetophenone | secondary | 8.33e-10 | 4.21e-11 |
| Fuel Oil #2 Prod. | Aromatic hydrocarbons | secondary | 7.86e-10 | 3.97e-11 |
| Fuel Oil #2 Prod. | Methyl ethyl ketone | secondary | 7.79e-10 | 3.94e-11 |
| Japanese Electric Grid | Benzo[b,j,k]fluoranthene | model/secondary | 7.77e-10 | 3.93e-11 |
| Fuel Oil #2 Prod. | Tetrachloroethylene | secondary | 7.70e-10 | 3.89e-11 |
| LPG Production | Benzo[b]fluoranthene | secondary | 7.62e-10 | 3.85e-11 |
| Natural Gas Prod. | Silicon | secondary | 7.43e-10 | 3.75e-11 |
| LPG Production | Mercury compounds | secondary | 7.08e-10 | 3.58e-11 |
| Fuel Oil #6 Prod. | Chromium (III) | secondary | 6.96e-10 | 3.52e-11 |
| Fuel Oil #2 Prod. | 1,2-Dichloroethane | secondary | 6.85e-10 | 3.46e-11 |
| Japanese Electric Grid | Indeno(1,2,3-cd)pyrene | model/secondary | 6.84e-10 | 3.45e-11 |
| Fuel Oil #2 Prod. | Methyl methacrylate | secondary | 6.66e-10 | 3.37e-11 |
| LPG Production | Fluorene | secondary | 6.60e-10 | 3.34e-11 |
| Fuel Oil #4 Prod. | Acrolein | secondary | 6.49e-10 | 3.28e-11 |
| Glass/frit | Lead | primary | 6.40e-10 | 3.23e-11 |
| Fuel Oil #2 Prod. | Styrene | secondary | 5.89e-10 | 2.97e-11 |
| US electric grid | Biphenyl | model/secondary | 5.79e-10 | 2.93e-11 |
| LPG Production | Pyrene | secondary | 5.71e-10 | 2.88e-11 |
| LPG Production | Benzo[g,h,i]perylene | secondary | 5.55e-10 | 2.80e-11 |
| Fuel Oil #2 Prod. | Bromoform | secondary | 5.50e-10 | 2.78e-11 |
| Fuel Oil #2 Prod. | Dichloromethane | secondary | 5.42e-10 | 2.74e-11 |
| LPG Production | Fluoranthene | secondary | 5.39e-10 | 2.72e-11 |
| Fuel Oil #4 Prod. | Methyl chloride | secondary | 5.39e-10 | 2.72e-11 |
| Natural Gas Prod. | Isophorone | secondary | 5.38e-10 | 2.72e-11 |
| Japanese Electric Grid | Chrysene | model/secondary | 5.38e-10 | 2.72e-11 |
| Japanese Electric Grid | 2-Methylnaphthalene | model/secondary | 4.75e-10 | 2.40e-11 |
| Glass/frit | Manganese | primary | 4.67e-10 | 2.36e-11 |
| Japanese Electric Grid | Biphenyl | model/secondary | 4.62e-10 | 2.34e-11 |
| Japanese Electric Grid | Anthracene | model/secondary | 4.61e-10 | 2.33e-11 |
| Fuel Oil #6 Prod. | Ethylbenzene | secondary | 4.47e-10 | 2.26e-11 |
| Fuel Oil #6 Prod. | Copper (+1 & +2) | secondary | 4.43e-10 | 2.24e-11 |
| Fuel Oil #2 Prod. | Chlorobenzene | secondary | 4.40e-10 | 2.22e-11 |
| Natural Gas Prod. | Methyl ethyl ketone | secondary | 4.31e-10 | 2.18e-11 |
| Japanese Electric Grid | Benzo[g,h,i]perylene | model/secondary | 4.30e-10 | 2.17e-11 |
| Fuel Oil #6 Prod. | o-xylene | secondary | 4.29e-10 | 2.17e-11 |
| Natural Gas Prod. | Tetrachloroethylene | secondary | 4.26e-10 | 2.15e-11 |
| Fuel Oil #4 Prod. | Di(2-ethylhexyl)phthalate | secondary | 3.88e-10 | 1.96e-11 |
| Natural Gas Prod. | 1,2-Dichloroethane | secondary | 3.79e-10 | 1.91e-11 |
| Natural Gas Prod. | Methyl methacrylate | secondary | 3.68e-10 | 1.86e-11 |
| Fuel Oil #2 Prod. | Copper (+1 & +2) | secondary | 3.68e-10 | 1.86e-11 |
| US electric grid | Acenaphthylene | model/secondary | 3.60e-10 | 1.82e-11 |
| Fuel Oil #2 Prod. | 2,4-Dinitrotoluene | secondary | 3.52e-10 | 1.78e-11 |
| US electric grid | Benzo[a]pyrene | model/secondary | 3.41e-10 | 1.72e-11 |
| US electric grid | Benzo[b,j,k]fluoranthene | model/secondary | 3.40e-10 | 1.72e-11 |
| Japanese Electric Grid | Acenaphthylene | model/secondary | 3.29e-10 | 1.66e-11 |
| Natural Gas Prod. | Styrene | secondary | 3.25e-10 | 1.64e-11 |
| Fuel Oil #2 Prod. | Acetophenone | secondary | 3.24e-10 | 1.64e-11 |

## Table M-33. CRT LCIA Results for the Chronic Public Health Effects Impact Category

| Process Group | Material | LCI Data Type | Chronic Public Toxicity (tox-kg) | % of Total |
|---|---|---|---|---|
| Natural Gas Prod. | Barium cmpds | secondary | 3.21e-10 | 1.62e-11 |
| US electric grid | Anthracene | model/secondary | 3.15e-10 | 1.59e-11 |
| Fuel Oil #4 Prod. | Acetaldehyde | secondary | 3.09e-10 | 1.56e-11 |
| Natural Gas Prod. | Bromoform | secondary | 3.04e-10 | 1.54e-11 |
| Natural Gas Prod. | Dichloromethane | secondary | 3.00e-10 | 1.52e-11 |
| LPG Production | 5-Methyl chrysene | secondary | 2.94e-10 | 1.49e-11 |
| Fuel Oil #4 Prod. | Mercury | secondary | 2.89e-10 | 1.46e-11 |
| Glass/frit | Cobalt | primary | 2.87e-10 | 1.45e-11 |
| Japanese Electric Grid | Benzo[a]pyrene | model/secondary | 2.73e-10 | 1.38e-11 |
| Fuel Oil #2 Prod. | Chromium (III) | secondary | 2.70e-10 | 1.36e-11 |
| Natural Gas Prod. | Chlorobenzene | secondary | 2.43e-10 | 1.23e-11 |
| LPG Production | Halogenated matter (organic) | secondary | 2.33e-10 | 1.18e-11 |
| US electric grid | Benzo[a]anthracene | model/secondary | 2.26e-10 | 1.14e-11 |
| Fuel Oil #6 Prod. | Methyl tert-butyl ether | secondary | 2.25e-10 | 1.14e-11 |
| Fuel Oil #4 Prod. | Dimethyl sulfate | secondary | 2.15e-10 | 1.09e-11 |
| Fuel Oil #2 Prod. | o-xylene | secondary | 2.06e-10 | 1.04e-11 |
| Japanese Electric Grid | Pyrene | model/secondary | 2.00e-10 | 1.01e-11 |
| Natural Gas Prod. | 2,4-Dinitrotoluene | secondary | 1.95e-10 | 9.85e-12 |
| Fuel Oil #4 Prod. | Toluene | secondary | 1.90e-10 | 9.57e-12 |
| Natural Gas Prod. | Acetophenone | secondary | 1.79e-10 | 9.04e-12 |
| Fuel Oil #2 Prod. | Ethylbenzene | secondary | 1.74e-10 | 8.80e-12 |
| Japanese Electric Grid | Fluorene | model/secondary | 1.74e-10 | 8.80e-12 |
| Natural Gas Prod. | 3-Methylcholanthrene | secondary | 1.73e-10 | 8.73e-12 |
| Fuel Oil #6 Prod. | Phenanthrene | secondary | 1.71e-10 | 8.65e-12 |
| Japanese Electric Grid | Fluoranthene | model/secondary | 1.66e-10 | 8.40e-12 |
| US electric grid | Chrysene | model/secondary | 1.64e-10 | 8.28e-12 |
| Natural Gas Prod. | Chromium (III) | secondary | 1.61e-10 | 8.14e-12 |
| US electric grid | Indeno(1,2,3-cd)pyrene | model/secondary | 1.61e-10 | 8.12e-12 |
| Fuel Oil #6 Prod. | Vinyl acetate | secondary | 1.60e-10 | 8.09e-12 |
| Fuel Oil #4 Prod. | Cadmium cmpds | secondary | 1.58e-10 | 8.00e-12 |
| Fuel Oil #6 Prod. | Ethylene dibromide | secondary | 1.48e-10 | 7.50e-12 |
| US electric grid | Fluorene | model/secondary | 1.28e-10 | 6.45e-12 |
| Fuel Oil #6 Prod. | 3-Methylcholanthrene | secondary | 1.10e-10 | 5.54e-12 |
| Natural Gas Prod. | 2-Methylnaphthalene | secondary | 1.08e-10 | 5.47e-12 |
| Fuel Oil #6 Prod. | Zinc (+2) | secondary | 1.07e-10 | 5.38e-12 |
| Fuel Oil #4 Prod. | Isophorone | secondary | 1.04e-10 | 5.25e-12 |
| US electric grid | Fluoranthene | model/secondary | 1.02e-10 | 5.15e-12 |
| Fuel Oil #4 Prod. | 1,4-Dichlorobenzene | secondary | 1.02e-10 | 5.15e-12 |
| Natural Gas Prod. | Ethylbenzene | secondary | 9.66e-11 | 4.88e-12 |
| US electric grid | Dibenzo[a,h]anthracene | model/secondary | 8.75e-11 | 4.42e-12 |
| Fuel Oil #2 Prod. | Methyl tert-butyl ether | secondary | 8.74e-11 | 4.42e-12 |
| US electric grid | 2-Methylnaphthalene | model/secondary | 8.51e-11 | 4.30e-12 |
| Natural Gas Prod. | Aluminum (elemental) | secondary | 8.50e-11 | 4.29e-12 |
| US electric grid | Pyrene | model/secondary | 8.43e-11 | 4.26e-12 |
| Fuel Oil #4 Prod. | Methyl ethyl ketone | secondary | 8.31e-11 | 4.20e-12 |
| Fuel Oil #4 Prod. | Tetrachloroethylene | secondary | 8.21e-11 | 4.15e-12 |
| Fuel Oil #4 Prod. | 1,2-Dichloroethane | secondary | 7.30e-11 | 3.69e-12 |
| Fuel Oil #4 Prod. | Methyl methacrylate | secondary | 7.10e-11 | 3.59e-12 |
| Natural Gas Prod. | Phenanthrene | secondary | 7.05e-11 | 3.56e-12 |
| Fuel Oil #2 Prod. | Phenanthrene | secondary | 7.03e-11 | 3.55e-12 |
| Fuel Oil #6 Prod. | 2-Methylnaphthalene | secondary | 6.87e-11 | 3.47e-12 |

## Table M-33. CRT LCIA Results for the Chronic Public Health Effects Impact Category

| Process Group | Material | LCI Data Type | Chronic Public Toxicity (tox-kg) | % of Total |
|---|---|---|---|---|
| Fuel Oil #2 Prod. | Zinc (+2) | secondary | 6.78e-11 | 3.42e-12 |
| Fuel Oil #4 Prod. | Aromatic hydrocarbons | secondary | 6.39e-11 | 3.23e-12 |
| US electric grid | 5-Methyl chrysene | model/secondary | 6.30e-11 | 3.18e-12 |
| Fuel Oil #4 Prod. | Styrene | secondary | 6.28e-11 | 3.17e-12 |
| Fuel Oil #2 Prod. | Vinyl acetate | secondary | 6.23e-11 | 3.15e-12 |
| Fuel Oil #6 Prod. | 1,1,1-Trichloroethane | secondary | 6.11e-11 | 3.08e-12 |
| US electric grid | o-xylene | model/secondary | 6.06e-11 | 3.06e-12 |
| Fuel Oil #6 Prod. | Chlorine | secondary | 5.92e-11 | 2.99e-12 |
| Fuel Oil #4 Prod. | Bromoform | secondary | 5.86e-11 | 2.96e-12 |
| Fuel Oil #4 Prod. | Dichloromethane | secondary | 5.78e-11 | 2.92e-12 |
| Fuel Oil #2 Prod. | Ethylene dibromide | secondary | 5.77e-11 | 2.92e-12 |
| US electric grid | Benzo[g,h,i]perylene | model/secondary | 5.75e-11 | 2.91e-12 |
| Fuel Oil #2 Prod. | 3-Methylcholanthrene | secondary | 5.70e-11 | 2.88e-12 |
| Japanese Electric Grid | 5-Methyl chrysene | model/secondary | 5.03e-11 | 2.54e-12 |
| Natural Gas Prod. | Methyl tert-butyl ether | secondary | 4.83e-11 | 2.44e-12 |
| Fuel Oil #4 Prod. | Chlorobenzene | secondary | 4.69e-11 | 2.37e-12 |
| Fuel Oil #6 Prod. | Acenaphthene | secondary | 4.67e-11 | 2.36e-12 |
| Fuel Oil #6 Prod. | Ethyl Chloride | secondary | 4.33e-11 | 2.19e-12 |
| Fuel Oil #4 Prod. | 2,4-Dinitrotoluene | secondary | 3.76e-11 | 1.90e-12 |
| Fuel Oil #6 Prod. | Cumene | secondary | 3.66e-11 | 1.85e-12 |
| Fuel Oil #2 Prod. | 2-Methylnaphthalene | secondary | 3.57e-11 | 1.80e-12 |
| Fuel Oil #4 Prod. | Acetophenone | secondary | 3.45e-11 | 1.74e-12 |
| Natural Gas Prod. | Vinyl acetate | secondary | 3.44e-11 | 1.74e-12 |
| Fuel Oil #6 Prod. | Benzo[a]pyrene | secondary | 3.20e-11 | 1.62e-12 |
| Natural Gas Prod. | Ethylene dibromide | secondary | 3.19e-11 | 1.61e-12 |
| Fuel Oil #2 Prod. | Chlorine | secondary | 3.12e-11 | 1.58e-12 |
| Fuel Oil #4 Prod. | Copper (+1 & +2) | secondary | 2.99e-11 | 1.51e-12 |
| Fuel Oil #4 Prod. | Chromium (III) | secondary | 2.88e-11 | 1.45e-12 |
| Fuel Oil #2 Prod. | 1,1,1-Trichloroethane | secondary | 2.37e-11 | 1.20e-12 |
| Fuel Oil #6 Prod. | Biphenyl | secondary | 2.18e-11 | 1.10e-12 |
| Fuel Oil #2 Prod. | Acenaphthene | secondary | 2.13e-11 | 1.08e-12 |
| Fuel Oil #4 Prod. | o-xylene | secondary | 2.01e-11 | 1.02e-12 |
| Natural Gas Prod. | Benzo[a]pyrene | secondary | 1.97e-11 | 9.97e-13 |
| Fuel Oil #4 Prod. | Ethylbenzene | secondary | 1.86e-11 | 9.37e-13 |
| Natural Gas Prod. | Dibenzo[a,h]anthracene | secondary | 1.78e-11 | 8.98e-13 |
| Natural Gas Prod. | Acenaphthene | secondary | 1.77e-11 | 8.96e-13 |
| Fuel Oil #2 Prod. | Ethyl Chloride | secondary | 1.68e-11 | 8.50e-13 |
| Fuel Oil #6 Prod. | Acenaphthylene | secondary | 1.61e-11 | 8.15e-13 |
| Fuel Oil #6 Prod. | Anthracene | secondary | 1.52e-11 | 7.69e-13 |
| Fuel Oil #2 Prod. | Cumene | secondary | 1.42e-11 | 7.19e-13 |
| Natural Gas Prod. | Cadmium cmpds | secondary | 1.40e-11 | 7.09e-13 |
| Fuel Oil #2 Prod. | Benzo[a]pyrene | secondary | 1.33e-11 | 6.70e-13 |
| Natural Gas Prod. | 1,1,1-Trichloroethane | secondary | 1.31e-11 | 6.63e-13 |
| Fuel Oil #6 Prod. | Dibenzo[a,h]anthracene | secondary | 1.19e-11 | 6.03e-13 |
| Fuel Oil #6 Prod. | Benzo[a]anthracene | secondary | 1.19e-11 | 6.02e-13 |
| Fuel Oil #6 Prod. | Benzo[b,j,k]fluoranthene | secondary | 1.19e-11 | 6.00e-13 |
| Fuel Oil #6 Prod. | Indeno(1,2,3-cd)pyrene | secondary | 9.33e-12 | 4.71e-13 |
| Fuel Oil #4 Prod. | Methyl tert-butyl ether | secondary | 9.32e-12 | 4.71e-13 |
| Natural Gas Prod. | Ethyl Chloride | secondary | 9.30e-12 | 4.70e-13 |
| Natural Gas Prod. | Benzo[a]anthracene | secondary | 8.56e-12 | 4.32e-13 |

## Table M-33. CRT LCIA Results for the Chronic Public Health Effects Impact Category

| Process Group | Material | LCI Data Type | Chronic Public Toxicity (tox-kg) | % of Total |
|---|---|---|---|---|
| Fuel Oil #2 Prod. | Biphenyl | secondary | 8.49e-12 | 4.29e-13 |
| Fuel Oil #6 Prod. | Chrysene | secondary | 8.28e-12 | 4.19e-13 |
| Natural Gas Prod. | Anthracene | secondary | 8.13e-12 | 4.11e-13 |
| Fuel Oil #6 Prod. | Lead cmpds | secondary | 7.89e-12 | 3.99e-13 |
| Natural Gas Prod. | Cumene | secondary | 7.87e-12 | 3.98e-13 |
| Natural Gas Prod. | Indeno(1,2,3-cd)pyrene | secondary | 7.53e-12 | 3.80e-13 |
| Fuel Oil #4 Prod. | Phenanthrene | secondary | 7.32e-12 | 3.70e-13 |
| Natural Gas Prod. | Acenaphthylene | secondary | 7.00e-12 | 3.54e-13 |
| Fuel Oil #6 Prod. | Nickel cmpds | secondary | 6.67e-12 | 3.37e-13 |
| Fuel Oil #4 Prod. | Vinyl acetate | secondary | 6.64e-12 | 3.35e-13 |
| Fuel Oil #2 Prod. | Acenaphthylene | secondary | 6.63e-12 | 3.35e-13 |
| Fuel Oil #2 Prod. | Dibenzo[a,h]anthracene | secondary | 6.56e-12 | 3.31e-13 |
| Fuel Oil #2 Prod. | Lead cmpds | secondary | 6.55e-12 | 3.31e-13 |
| Fuel Oil #2 Prod. | Anthracene | secondary | 6.49e-12 | 3.28e-13 |
| Natural Gas Prod. | Benzo[b]fluoranthene | secondary | 6.37e-12 | 3.22e-13 |
| Fuel Oil #4 Prod. | Ethylene dibromide | secondary | 6.16e-12 | 3.11e-13 |
| Fuel Oil #4 Prod. | Zinc (+2) | secondary | 5.97e-12 | 3.02e-13 |
| Fuel Oil #2 Prod. | Benzo[a]anthracene | secondary | 5.73e-12 | 2.90e-13 |
| Natural Gas Prod. | Aromatic hydrocarbons | secondary | 5.66e-12 | 2.86e-13 |
| Fuel Oil #2 Prod. | Nickel cmpds | secondary | 5.53e-12 | 2.80e-13 |
| Natural Gas Prod. | Chrysene | secondary | 5.43e-12 | 2.74e-13 |
| Fuel Oil #4 Prod. | 3-Methylcholanthrene | secondary | 5.39e-12 | 2.73e-13 |
| Fuel Oil #6 Prod. | Fluorene | secondary | 5.11e-12 | 2.58e-13 |
| Natural Gas Prod. | Biphenyl | secondary | 4.70e-12 | 2.37e-13 |
| Fuel Oil #2 Prod. | Benzo[b,j,k]fluoranthene | secondary | 4.62e-12 | 2.33e-13 |
| Fuel Oil #2 Prod. | Indeno(1,2,3-cd)pyrene | secondary | 4.30e-12 | 2.17e-13 |
| Fuel Oil #6 Prod. | Benzo[b]fluoranthene | secondary | 4.19e-12 | 2.11e-13 |
| Fuel Oil #6 Prod. | Fluoranthene | secondary | 4.11e-12 | 2.08e-13 |
| Fuel Oil #6 Prod. | Pyrene | secondary | 4.04e-12 | 2.04e-13 |
| Fuel Oil #2 Prod. | Chrysene | secondary | 3.68e-12 | 1.86e-13 |
| Fuel Oil #6 Prod. | HALON-1301 | secondary | 3.43e-12 | 1.74e-13 |
| Fuel Oil #6 Prod. | Benzo[g,h,i]perylene | secondary | 3.43e-12 | 1.73e-13 |
| Fuel Oil #4 Prod. | 2-Methylnaphthalene | secondary | 3.38e-12 | 1.71e-13 |
| Natural Gas Prod. | Benzo[g,h,i]perylene | secondary | 3.19e-12 | 1.61e-13 |
| Fuel Oil #4 Prod. | Chlorine | secondary | 2.94e-12 | 1.48e-13 |
| Fuel Oil #2 Prod. | HALON-1301 | secondary | 2.85e-12 | 1.44e-13 |
| Natural Gas Prod. | Copper (+1 & +2) | secondary | 2.65e-12 | 1.34e-13 |
| Natural Gas Prod. | Benzo[b,j,k]fluoranthene | secondary | 2.55e-12 | 1.29e-13 |
| Fuel Oil #4 Prod. | 1,1,1-Trichloroethane | secondary | 2.53e-12 | 1.28e-13 |
| Natural Gas Prod. | Pyrene | secondary | 2.45e-12 | 1.24e-13 |
| Fuel Oil #6 Prod. | Mercury compounds | secondary | 2.39e-12 | 1.21e-13 |
| Fuel Oil #6 Prod. | 5-Methyl chrysene | secondary | 2.38e-12 | 1.20e-13 |
| Fuel Oil #2 Prod. | Benzo[b]fluoranthene | secondary | 2.25e-12 | 1.14e-13 |
| Fuel Oil #4 Prod. | Acenaphthene | secondary | 2.12e-12 | 1.07e-13 |
| Fuel Oil #2 Prod. | Fluorene | secondary | 2.06e-12 | 1.04e-13 |
| Fuel Oil #2 Prod. | Mercury compounds | secondary | 1.99e-12 | 1.00e-13 |
| Fuel Oil #4 Prod. | Ethyl Chloride | secondary | 1.79e-12 | 9.06e-14 |
| Fuel Oil #2 Prod. | Pyrene | secondary | 1.75e-12 | 8.85e-14 |
| Fuel Oil #2 Prod. | Fluoranthene | secondary | 1.67e-12 | 8.46e-14 |
| Fuel Oil #2 Prod. | Benzo[g,h,i]perylene | secondary | 1.67e-12 | 8.42e-14 |

## Table M-33. CRT LCIA Results for the Chronic Public Health Effects Impact Category

| Process Group | Material | LCI Data Type | Chronic Public Toxicity (tox-kg) | % of Total |
|---|---|---|---|---|
| Natural Gas Prod. | Fluorene | secondary | 1.64e-12 | 8.28e-14 |
| Fuel Oil #4 Prod. | Cumene | secondary | 1.52e-12 | 7.67e-14 |
| Natural Gas Prod. | Fluoranthene | secondary | 1.46e-12 | 7.40e-14 |
| Fuel Oil #4 Prod. | Benzo[a]pyrene | secondary | 1.37e-12 | 6.95e-14 |
| Fuel Oil #2 Prod. | 5-Methyl chrysene | secondary | 9.24e-13 | 4.67e-14 |
| Fuel Oil #4 Prod. | Biphenyl | secondary | 9.06e-13 | 4.58e-14 |
| Fuel Oil #6 Prod. | Halogenated matter (organic) | secondary | 7.89e-13 | 3.99e-14 |
| Fuel Oil #4 Prod. | Acenaphthylene | secondary | 6.90e-13 | 3.49e-14 |
| Fuel Oil #4 Prod. | Anthracene | secondary | 6.65e-13 | 3.36e-14 |
| Fuel Oil #2 Prod. | Halogenated matter (organic) | secondary | 6.55e-13 | 3.31e-14 |
| Fuel Oil #4 Prod. | Dibenzo[a,h]anthracene | secondary | 6.08e-13 | 3.07e-14 |
| LPG Production | Halogenated hydrocarbons (unspecified) | secondary | 5.84e-13 | 2.95e-14 |
| Fuel Oil #4 Prod. | Benzo[a]anthracene | secondary | 5.59e-13 | 2.82e-14 |
| Fuel Oil #4 Prod. | Lead cmpds | secondary | 5.32e-13 | 2.69e-14 |
| Natural Gas Prod. | 5-Methyl chrysene | secondary | 5.11e-13 | 2.58e-14 |
| Fuel Oil #4 Prod. | Benzo[b,j,k]fluoranthene | secondary | 4.92e-13 | 2.49e-14 |
| Fuel Oil #4 Prod. | Nickel cmpds | secondary | 4.50e-13 | 2.27e-14 |
| Fuel Oil #4 Prod. | Indeno(1,2,3-cd)pyrene | secondary | 4.26e-13 | 2.15e-14 |
| Fuel Oil #4 Prod. | Chrysene | secondary | 3.70e-13 | 1.87e-14 |
| Fuel Oil #4 Prod. | HALON-1301 | secondary | 2.32e-13 | 1.17e-14 |
| Fuel Oil #4 Prod. | Fluorene | secondary | 2.16e-13 | 1.09e-14 |
| Fuel Oil #4 Prod. | Benzo[b]fluoranthene | secondary | 2.10e-13 | 1.06e-14 |
| Fuel Oil #4 Prod. | Pyrene | secondary | 1.78e-13 | 9.00e-15 |
| Fuel Oil #4 Prod. | Fluoranthene | secondary | 1.75e-13 | 8.83e-15 |
| Fuel Oil #4 Prod. | Benzo[g,h,i]perylene | secondary | 1.62e-13 | 8.18e-15 |
| Fuel Oil #4 Prod. | Mercury compounds | secondary | 1.61e-13 | 8.16e-15 |
| Fuel Oil #4 Prod. | 5-Methyl chrysene | secondary | 9.85e-14 | 4.98e-15 |
| Fuel Oil #4 Prod. | Halogenated matter (organic) | secondary | 5.32e-14 | 2.69e-15 |
| Natural Gas Prod. | Lead cmpds | secondary | 4.72e-14 | 2.38e-15 |
| Natural Gas Prod. | Nickel cmpds | secondary | 3.99e-14 | 2.01e-15 |
| Natural Gas Prod. | HALON-1301 | secondary | 2.05e-14 | 1.04e-15 |
| Natural Gas Prod. | Mercury compounds | secondary | 1.43e-14 | 7.23e-16 |
| Natural Gas Prod. | Halogenated matter (organic) | secondary | 4.72e-15 | 2.38e-16 |
| Fuel Oil #6 Prod. | Halogenated hydrocarbons (unspecified) | secondary | 1.97e-15 | 9.98e-17 |
| Fuel Oil #2 Prod. | Halogenated hydrocarbons (unspecified) | secondary | 1.64e-15 | 8.27e-17 |
| Fuel Oil #4 Prod. | Halogenated hydrocarbons (unspecified) | secondary | 1.33e-16 | 6.72e-18 |
| Natural Gas Prod. | Halogenated hydrocarbons (unspecified) | secondary | 1.18e-17 | 5.95e-19 |
| **Total Manufacturing** | | | **9.77e+01** | **4.94e+00** |
| **Use, Maintenance and Repair Life-cycle Stage** | | | | |
| US electric grid | Sulfur dioxide | model/secondary | 1.65e+03 | 8.32e+01 |
| US electric grid | Nitrogen oxides | model/secondary | 2.35e+00 | 1.19e-01 |
| US electric grid | Methane | model/secondary | 1.29e+00 | 6.52e-02 |
| US electric grid | Carbon monoxide | model/secondary | 1.09e+00 | 5.51e-02 |
| US electric grid | Arsenic | model/secondary | 5.58e-01 | 2.82e-02 |
| US electric grid | Hydrochloric acid | model/secondary | 4.93e-01 | 2.49e-02 |
| US electric grid | PM-10 | model/secondary | 1.16e-01 | 5.84e-03 |
| US electric grid | Selenium | model/secondary | 9.28e-02 | 4.69e-03 |
| US electric grid | Vanadium | model/secondary | 6.98e-02 | 3.53e-03 |
| US electric grid | Hydrofluoric acid | model/secondary | 2.69e-02 | 1.36e-03 |
| US electric grid | Formaldehyde | model/secondary | 9.70e-03 | 4.90e-04 |

## Table M-33. CRT LCIA Results for the Chronic Public Health Effects Impact Category

| Process Group | Material | LCI Data Type | Chronic Public Toxicity (tox-kg) | % of Total |
|---|---|---|---|---|
| US electric grid | Benzene | model/secondary | 6.98e-03 | 3.53e-04 |
| US electric grid | Nitrous oxide | model/secondary | 6.80e-03 | 3.43e-04 |
| US electric grid | Phosphorus (yellow or white) | model/secondary | 3.93e-03 | 1.99e-04 |
| US electric grid | Zinc (elemental) | model/secondary | 1.81e-03 | 9.16e-05 |
| US electric grid | Antimony | model/secondary | 1.49e-03 | 7.52e-05 |
| US electric grid | Chromium (VI) | model/secondary | 5.37e-04 | 2.71e-05 |
| US electric grid | Molybdenum | model/secondary | 4.97e-04 | 2.51e-05 |
| US electric grid | Methyl hydrazine | model/secondary | 4.61e-04 | 2.33e-05 |
| US electric grid | 2-Chloroacetophenone | model/secondary | 4.32e-04 | 2.18e-05 |
| US electric grid | Bromomethane | model/secondary | 4.27e-04 | 2.16e-05 |
| US electric grid | Nickel | model/secondary | 2.32e-04 | 1.17e-05 |
| US electric grid | Cyanide (-1) | model/secondary | 2.24e-04 | 1.13e-05 |
| US electric grid | 2,3,7,8-TCDD | model/secondary | 1.70e-04 | 8.58e-06 |
| US electric grid | Naphthalene | model/secondary | 1.37e-04 | 6.92e-06 |
| US electric grid | Barium | model/secondary | 1.16e-04 | 5.88e-06 |
| US electric grid | Carbon disulfide | model/secondary | 9.18e-05 | 4.64e-06 |
| US electric grid | Benzyl chloride | model/secondary | 7.02e-05 | 3.55e-06 |
| US electric grid | Cadmium | model/secondary | 5.48e-05 | 2.77e-06 |
| US electric grid | Chloroform | model/secondary | 4.95e-05 | 2.50e-06 |
| US electric grid | Propionaldehyde | model/secondary | 4.58e-05 | 2.31e-06 |
| US electric grid | Manganese | model/secondary | 4.56e-05 | 2.30e-06 |
| US electric grid | Fluoride | model/secondary | 3.91e-05 | 1.97e-06 |
| US electric grid | Beryllium | model/secondary | 2.92e-05 | 1.47e-06 |
| US electric grid | Acrolein | model/secondary | 2.60e-05 | 1.31e-06 |
| US electric grid | Lead | model/secondary | 2.55e-05 | 1.29e-06 |
| US electric grid | Cobalt | model/secondary | 2.43e-05 | 1.23e-06 |
| US electric grid | Copper | model/secondary | 2.24e-05 | 1.13e-06 |
| US electric grid | Methyl chloride | model/secondary | 2.16e-05 | 1.09e-06 |
| US electric grid | Di(2-ethylhexyl)phthalate | model/secondary | 1.55e-05 | 7.85e-07 |
| US electric grid | Acetaldehyde | model/secondary | 1.24e-05 | 6.25e-07 |
| US electric grid | Hexane | model/secondary | 1.20e-05 | 6.07e-07 |
| US electric grid | Dimethyl sulfate | model/secondary | 8.61e-06 | 4.35e-07 |
| US electric grid | Mercury | model/secondary | 7.51e-06 | 3.80e-07 |
| US electric grid | Toluene | model/secondary | 4.25e-06 | 2.15e-07 |
| US electric grid | Isophorone | model/secondary | 4.16e-06 | 2.10e-07 |
| US electric grid | Methyl ethyl ketone | model/secondary | 3.33e-06 | 1.68e-07 |
| US electric grid | Tetrachloroethylene | model/secondary | 3.29e-06 | 1.66e-07 |
| US electric grid | 1,2-Dichloroethane | model/secondary | 2.93e-06 | 1.48e-07 |
| US electric grid | Methyl methacrylate | model/secondary | 2.85e-06 | 1.44e-07 |
| US electric grid | Styrene | model/secondary | 2.51e-06 | 1.27e-07 |
| US electric grid | Bromoform | model/secondary | 2.35e-06 | 1.19e-07 |
| US electric grid | Dichloromethane | model/secondary | 2.32e-06 | 1.17e-07 |
| US electric grid | Chlorobenzene | model/secondary | 1.88e-06 | 9.49e-08 |
| US electric grid | 2,4-Dinitrotoluene | model/secondary | 1.51e-06 | 7.61e-08 |
| US electric grid | Acetophenone | model/secondary | 1.38e-06 | 6.99e-08 |
| US electric grid | Ethylbenzene | model/secondary | 7.41e-07 | 3.74e-08 |
| US electric grid | Methyl tert-butyl ether | model/secondary | 3.74e-07 | 1.89e-08 |
| US electric grid | Phenol | model/secondary | 2.85e-07 | 1.44e-08 |
| US electric grid | Vinyl acetate | model/secondary | 2.66e-07 | 1.34e-08 |
| US electric grid | Phenanthrene | model/secondary | 2.51e-07 | 1.27e-08 |

## Table M-33. CRT LCIA Results for the Chronic Public Health Effects Impact Category

| Process Group | Material | LCI Data Type | Chronic Public Toxicity (tox-kg) | % of Total |
|---|---|---|---|---|
| US electric grid | Ethylene dibromide | model/secondary | 2.47e-07 | 1.25e-08 |
| US electric grid | Xylene (mixed isomers) | model/secondary | 2.21e-07 | 1.11e-08 |
| US electric grid | Chromium (III) | model/secondary | 1.97e-07 | 9.96e-09 |
| US electric grid | 2,3,7,8-TCDF | model/secondary | 1.17e-07 | 5.89e-09 |
| US electric grid | 1,1,1-Trichloroethane | model/secondary | 1.08e-07 | 5.48e-09 |
| US electric grid | Acenaphthene | model/secondary | 7.61e-08 | 3.84e-09 |
| US electric grid | Ethyl Chloride | model/secondary | 7.19e-08 | 3.63e-09 |
| US electric grid | Cumene | model/secondary | 6.08e-08 | 3.07e-09 |
| US electric grid | Biphenyl | model/secondary | 3.63e-08 | 1.83e-09 |
| US electric grid | Acenaphthylene | model/secondary | 2.26e-08 | 1.14e-09 |
| US electric grid | Benzo[a]pyrene | model/secondary | 2.14e-08 | 1.08e-09 |
| US electric grid | Benzo[b,j,k]fluoranthene | model/secondary | 2.13e-08 | 1.08e-09 |
| US electric grid | Anthracene | model/secondary | 1.97e-08 | 9.96e-10 |
| US electric grid | Benzo[a]anthracene | model/secondary | 1.42e-08 | 7.15e-10 |
| US electric grid | Chrysene | model/secondary | 1.03e-08 | 5.19e-10 |
| US electric grid | Indeno(1,2,3-cd)pyrene | model/secondary | 1.01e-08 | 5.08e-10 |
| US electric grid | Fluorene | model/secondary | 7.99e-09 | 4.04e-10 |
| US electric grid | Fluoranthene | model/secondary | 6.39e-09 | 3.23e-10 |
| US electric grid | Dibenzo[a,h]anthracene | model/secondary | 5.48e-09 | 2.77e-10 |
| US electric grid | 2-Methylnaphthalene | model/secondary | 5.33e-09 | 2.69e-10 |
| US electric grid | Pyrene | model/secondary | 5.28e-09 | 2.67e-10 |
| US electric grid | 5-Methyl chrysene | model/secondary | 3.95e-09 | 1.99e-10 |
| US electric grid | o-xylene | model/secondary | 3.79e-09 | 1.92e-10 |
| US electric grid | Benzo[g,h,i]perylene | model/secondary | 3.60e-09 | 1.82e-10 |
| **Total Use, Maintenance and Repair** | | | **1.65e+03** | **8.35e+01** |
| **End-of-life Life-cycle Stage** | | | | |
| CRT Incineration | Sulfur dioxide | secondary | 1.98e-01 | 1.00e-02 |
| CRT landfilling | Sulfur dioxide | primary | 1.85e-01 | 9.34e-03 |
| US electric grid | Sulfur dioxide | model/secondary | 1.65e-01 | 8.32e-03 |
| CRT landfilling | Carbon monoxide | primary | 9.95e-03 | 5.03e-04 |
| CRT landfilling | Nitrogen dioxide | primary | 3.71e-03 | 1.87e-04 |
| CRT landfilling | PM | primary | 4.17e-04 | 2.11e-05 |
| US electric grid | Nitrogen oxides | model/secondary | 2.36e-04 | 1.19e-05 |
| US electric grid | Methane | model/secondary | 1.29e-04 | 6.52e-06 |
| US electric grid | Carbon monoxide | model/secondary | 1.09e-04 | 5.52e-06 |
| CRT landfilling | Methane | primary | 1.09e-04 | 5.50e-06 |
| CRT landfilling | Arsenic cmpds | primary | 1.02e-04 | 5.17e-06 |
| CRT Incineration | Arsenic cmpds | secondary | 9.83e-05 | 4.97e-06 |
| US electric grid | Arsenic | model/secondary | 5.58e-05 | 2.82e-06 |
| LPG Production | Carbon monoxide | secondary | 4.98e-05 | 2.52e-06 |
| US electric grid | Hydrochloric acid | model/secondary | 4.93e-05 | 2.49e-06 |
| CRT landfilling | Benzene | primary | 4.05e-05 | 2.04e-06 |
| CRT Incineration | Lead | secondary | 2.86e-05 | 1.44e-06 |
| LPG Production | Methane | secondary | 1.45e-05 | 7.32e-07 |
| LPG Production | Sulfur oxides | secondary | 1.38e-05 | 6.99e-07 |
| CRT Incineration | Barium cmpds | secondary | 1.27e-05 | 6.43e-07 |
| US electric grid | PM-10 | model/secondary | 1.16e-05 | 5.84e-07 |
| CRT Incineration | Silver compounds | secondary | 1.12e-05 | 5.67e-07 |
| CRT landfilling | Silver compounds | primary | 1.05e-05 | 5.29e-07 |
| CRT landfilling | Barium cmpds | primary | 1.01e-05 | 5.12e-07 |

## Table M-33. CRT LCIA Results for the Chronic Public Health Effects Impact Category

| Process Group | Material | LCI Data Type | Chronic Public Toxicity (tox-kg) | % of Total |
|---|---|---|---|---|
| LPG Production | Nitrogen oxides | secondary | 9.89e-06 | 5.00e-07 |
| US electric grid | Selenium | model/secondary | 9.28e-06 | 4.69e-07 |
| LPG Production | Vanadium | secondary | 9.04e-06 | 4.57e-07 |
| LPG Production | Benzene | secondary | 7.41e-06 | 3.74e-07 |
| US electric grid | Vanadium | model/secondary | 6.99e-06 | 3.53e-07 |
| CRT landfilling | Hydrochloric acid | primary | 4.69e-06 | 2.37e-07 |
| CRT landfilling | Ammonia | primary | 3.81e-06 | 1.92e-07 |
| US electric grid | Hydrofluoric acid | model/secondary | 2.69e-06 | 1.36e-07 |
| LPG Production | PM | secondary | 2.23e-06 | 1.12e-07 |
| LPG Production | Arsenic | secondary | 1.78e-06 | 9.01e-08 |
| LPG Production | Formaldehyde | secondary | 1.16e-06 | 5.85e-08 |
| CRT landfilling | Cadmium cmpds | primary | 9.72e-07 | 4.91e-08 |
| US electric grid | Formaldehyde | model/secondary | 9.70e-07 | 4.90e-08 |
| CRT Incineration | Cadmium cmpds | secondary | 9.41e-07 | 4.76e-08 |
| US electric grid | Benzene | model/secondary | 6.98e-07 | 3.53e-08 |
| US electric grid | Nitrous oxide | model/secondary | 6.80e-07 | 3.44e-08 |
| CRT landfilling | Hydrogen sulfide | primary | 4.61e-07 | 2.33e-08 |
| CRT landfilling | Chromium (VI) | primary | 4.44e-07 | 2.24e-08 |
| US electric grid | Phosphorus (yellow or white) | model/secondary | 3.93e-07 | 1.99e-08 |
| LPG Production | Hydrochloric acid | secondary | 3.18e-07 | 1.60e-08 |
| LPG Production | Nitrous oxide | secondary | 2.80e-07 | 1.41e-08 |
| US electric grid | Zinc (elemental) | model/secondary | 1.81e-07 | 9.16e-09 |
| US electric grid | Antimony | model/secondary | 1.49e-07 | 7.52e-09 |
| LPG Production | Phosphorus (yellow or white) | secondary | 8.47e-08 | 4.28e-09 |
| LPG Production | Fluorides (F-) | secondary | 6.51e-08 | 3.29e-09 |
| LPG Production | Selenium | secondary | 6.40e-08 | 3.23e-09 |
| US electric grid | Chromium (VI) | model/secondary | 5.37e-08 | 2.72e-09 |
| LPG Production | Hydrogen sulfide | secondary | 5.29e-08 | 2.67e-09 |
| LPG Production | Ammonia | secondary | 5.11e-08 | 2.58e-09 |
| US electric grid | Molybdenum | model/secondary | 4.97e-08 | 2.51e-09 |
| US electric grid | Methyl hydrazine | model/secondary | 4.61e-08 | 2.33e-09 |
| US electric grid | 2-Chloroacetophenone | model/secondary | 4.32e-08 | 2.18e-09 |
| US electric grid | Bromomethane | model/secondary | 4.27e-08 | 2.16e-09 |
| CRT landfilling | Selenium | primary | 3.21e-08 | 1.62e-09 |
| US electric grid | Nickel | model/secondary | 2.32e-08 | 1.17e-09 |
| US electric grid | Cyanide (-1) | model/secondary | 2.24e-08 | 1.13e-09 |
| CRT Incineration | Carbon tetrachloride | secondary | 1.81e-08 | 9.16e-10 |
| LPG Production | Hydrofluoric acid | secondary | 1.73e-08 | 8.75e-10 |
| US electric grid | 2,3,7,8-TCDD | model/secondary | 1.70e-08 | 8.59e-10 |
| CRT landfilling | Carbon tetrachloride | primary | 1.69e-08 | 8.54e-10 |
| LPG Production | Molybdenum | secondary | 1.42e-08 | 7.19e-10 |
| US electric grid | Naphthalene | model/secondary | 1.37e-08 | 6.92e-10 |
| LPG Production | Chromium (VI) | secondary | 1.36e-08 | 6.88e-10 |
| LPG Production | Ethane | secondary | 1.34e-08 | 6.77e-10 |
| CRT landfilling | Chloroform | primary | 1.32e-08 | 6.67e-10 |
| US electric grid | Barium | model/secondary | 1.17e-08 | 5.89e-10 |
| CRT landfilling | Mercury compounds | primary | 1.15e-08 | 5.84e-10 |
| CRT Incineration | Mercury compounds | secondary | 1.13e-08 | 5.72e-10 |
| LPG Production | Zinc (elemental) | secondary | 1.04e-08 | 5.23e-10 |
| US electric grid | Carbon disulfide | model/secondary | 9.18e-09 | 4.64e-10 |

## Table M-33. CRT LCIA Results for the Chronic Public Health Effects Impact Category

| Process Group | Material | LCI Data Type | Chronic Public Toxicity (tox-kg) | % of Total |
|---|---|---|---|---|
| CRT landfilling | Toluene | primary | 8.22e-09 | 4.15e-10 |
| LPG Production | Hexane | secondary | 7.78e-09 | 3.93e-10 |
| US electric grid | Benzyl chloride | model/secondary | 7.03e-09 | 3.55e-10 |
| LPG Production | Phenol | secondary | 6.17e-09 | 3.12e-10 |
| LPG Production | Pentane | secondary | 5.62e-09 | 2.84e-10 |
| US electric grid | Cadmium | model/secondary | 5.48e-09 | 2.77e-10 |
| US electric grid | Chloroform | model/secondary | 4.96e-09 | 2.50e-10 |
| US electric grid | Propionaldehyde | model/secondary | 4.58e-09 | 2.31e-10 |
| US electric grid | Manganese | model/secondary | 4.56e-09 | 2.30e-10 |
| US electric grid | Fluoride | model/secondary | 3.91e-09 | 1.97e-10 |
| LPG Production | PM-10 | secondary | 3.88e-09 | 1.96e-10 |
| LPG Production | Nickel | secondary | 3.56e-09 | 1.80e-10 |
| US electric grid | Beryllium | model/secondary | 2.92e-09 | 1.47e-10 |
| US electric grid | Acrolein | model/secondary | 2.60e-09 | 1.31e-10 |
| US electric grid | Lead | model/secondary | 2.55e-09 | 1.29e-10 |
| LPG Production | Aluminum (+3) | secondary | 2.44e-09 | 1.24e-10 |
| US electric grid | Cobalt | model/secondary | 2.43e-09 | 1.23e-10 |
| US electric grid | Copper | model/secondary | 2.24e-09 | 1.13e-10 |
| US electric grid | Methyl chloride | model/secondary | 2.16e-09 | 1.09e-10 |
| LPG Production | Antimony | secondary | 1.85e-09 | 9.35e-11 |
| CRT landfilling | Xylene (mixed isomers) | primary | 1.69e-09 | 8.56e-11 |
| CRT Incineration | Lead cmpds | secondary | 1.62e-09 | 8.19e-11 |
| CRT landfilling | Lead cmpds | primary | 1.58e-09 | 7.98e-11 |
| US electric grid | Di(2-ethylhexyl)phthalate | model/secondary | 1.55e-09 | 7.86e-11 |
| US electric grid | Acetaldehyde | model/secondary | 1.24e-09 | 6.26e-11 |
| CRT landfilling | Tetrachloroethylene | primary | 1.20e-09 | 6.08e-11 |
| US electric grid | Hexane | model/secondary | 1.20e-09 | 6.07e-11 |
| CRT landfilling | 1,2-Dichloroethane | primary | 1.15e-09 | 5.81e-11 |
| LPG Production | Nitrate | secondary | 1.05e-09 | 5.28e-11 |
| US electric grid | Dimethyl sulfate | model/secondary | 8.61e-10 | 4.35e-11 |
| CRT Incineration | Trichloroethylene | secondary | 7.65e-10 | 3.86e-11 |
| US electric grid | Mercury | model/secondary | 7.52e-10 | 3.80e-11 |
| CRT landfilling | Trichloroethylene | primary | 7.13e-10 | 3.60e-11 |
| CRT landfilling | Ethylbenzene | primary | 4.44e-10 | 2.24e-11 |
| US electric grid | Toluene | model/secondary | 4.25e-10 | 2.15e-11 |
| US electric grid | Isophorone | model/secondary | 4.16e-10 | 2.10e-11 |
| US electric grid | Methyl ethyl ketone | model/secondary | 3.33e-10 | 1.68e-11 |
| US electric grid | Tetrachloroethylene | model/secondary | 3.29e-10 | 1.66e-11 |
| LPG Production | Copper | secondary | 3.01e-10 | 1.52e-11 |
| LPG Production | Methyl hydrazine | secondary | 2.97e-10 | 1.50e-11 |
| US electric grid | 1,2-Dichloroethane | model/secondary | 2.93e-10 | 1.48e-11 |
| LPG Production | Silicon | secondary | 2.92e-10 | 1.48e-11 |
| US electric grid | Methyl methacrylate | model/secondary | 2.85e-10 | 1.44e-11 |
| LPG Production | 2-Chloroacetophenone | secondary | 2.78e-10 | 1.41e-11 |
| LPG Production | Dimethylbenzanthracene | secondary | 2.75e-10 | 1.39e-11 |
| LPG Production | Bromomethane | secondary | 2.75e-10 | 1.39e-11 |
| US electric grid | Styrene | model/secondary | 2.52e-10 | 1.27e-11 |
| US electric grid | Bromoform | model/secondary | 2.35e-10 | 1.19e-11 |
| US electric grid | Dichloromethane | model/secondary | 2.32e-10 | 1.17e-11 |
| LPG Production | Naphthalene | secondary | 2.26e-10 | 1.14e-11 |

## Table M-33. CRT LCIA Results for the Chronic Public Health Effects Impact Category

| Process Group | Material | LCI Data Type | Chronic Public Toxicity (tox-kg) | % of Total |
|---|---|---|---|---|
| LPG Production | Lead | secondary | 2.13e-10 | 1.08e-11 |
| CRT landfilling | Dichloromethane | primary | 2.01e-10 | 1.01e-11 |
| LPG Production | Manganese | secondary | 1.93e-10 | 9.73e-12 |
| US electric grid | Chlorobenzene | model/secondary | 1.88e-10 | 9.50e-12 |
| LPG Production | Beryllium | secondary | 1.85e-10 | 9.36e-12 |
| CRT Incineration | Vinyl chloride | secondary | 1.61e-10 | 8.14e-12 |
| LPG Production | Barium | secondary | 1.61e-10 | 8.13e-12 |
| US electric grid | 2,4-Dinitrotoluene | model/secondary | 1.51e-10 | 7.61e-12 |
| CRT landfilling | Vinyl chloride | primary | 1.50e-10 | 7.59e-12 |
| LPG Production | Cyanide (-1) | secondary | 1.44e-10 | 7.30e-12 |
| US electric grid | Acetophenone | model/secondary | 1.38e-10 | 6.99e-12 |
| LPG Production | Barium cmpds | secondary | 1.37e-10 | 6.92e-12 |
| LPG Production | Cadmium | secondary | 7.95e-11 | 4.02e-12 |
| US electric grid | Ethylbenzene | model/secondary | 7.41e-11 | 3.74e-12 |
| LPG Production | Carbon disulfide | secondary | 5.91e-11 | 2.99e-12 |
| CRT Incineration | o-xylene | secondary | 5.21e-11 | 2.63e-12 |
| CRT landfilling | Chromium (III) | primary | 4.83e-11 | 2.44e-12 |
| LPG Production | Benzyl chloride | secondary | 4.52e-11 | 2.29e-12 |
| LPG Production | Cobalt | secondary | 4.34e-11 | 2.19e-12 |
| US electric grid | Methyl tert-butyl ether | model/secondary | 3.74e-11 | 1.89e-12 |
| LPG Production | Aluminum (elemental) | secondary | 3.34e-11 | 1.69e-12 |
| LPG Production | Chloroform | secondary | 3.19e-11 | 1.61e-12 |
| LPG Production | Propionaldehyde | secondary | 2.95e-11 | 1.49e-12 |
| US electric grid | Phenol | model/secondary | 2.85e-11 | 1.44e-12 |
| US electric grid | Vinyl acetate | model/secondary | 2.66e-11 | 1.34e-12 |
| US electric grid | Phenanthrene | model/secondary | 2.51e-11 | 1.27e-12 |
| US electric grid | Ethylene dibromide | model/secondary | 2.47e-11 | 1.25e-12 |
| US electric grid | Xylene (mixed isomers) | model/secondary | 2.21e-11 | 1.12e-12 |
| US electric grid | Chromium (III) | model/secondary | 1.97e-11 | 9.96e-13 |
| LPG Production | Acrolein | secondary | 1.67e-11 | 8.46e-13 |
| LPG Production | Methyl chloride | secondary | 1.39e-11 | 7.02e-13 |
| US electric grid | 2,3,7,8-TCDF | model/secondary | 1.17e-11 | 5.90e-13 |
| US electric grid | 1,1,1-Trichloroethane | model/secondary | 1.08e-11 | 5.48e-13 |
| LPG Production | Di(2-ethylhexyl)phthalate | secondary | 1.00e-11 | 5.06e-13 |
| LPG Production | Acetaldehyde | secondary | 7.97e-12 | 4.03e-13 |
| US electric grid | Acenaphthene | model/secondary | 7.61e-12 | 3.85e-13 |
| LPG Production | Mercury | secondary | 7.50e-12 | 3.79e-13 |
| US electric grid | Ethyl Chloride | model/secondary | 7.19e-12 | 3.63e-13 |
| US electric grid | Cumene | model/secondary | 6.08e-12 | 3.07e-13 |
| LPG Production | Cadmium cmpds | secondary | 6.00e-12 | 3.03e-13 |
| LPG Production | Dimethyl sulfate | secondary | 5.54e-12 | 2.80e-13 |
| LPG Production | Toluene | secondary | 5.38e-12 | 2.72e-13 |
| US electric grid | Biphenyl | model/secondary | 3.63e-12 | 1.83e-13 |
| LPG Production | 1,4-Dichlorobenzene | secondary | 3.13e-12 | 1.58e-13 |
| LPG Production | Isophorone | secondary | 2.68e-12 | 1.35e-13 |
| LPG Production | Aromatic hydrocarbons | secondary | 2.42e-12 | 1.22e-13 |
| US electric grid | Acenaphthylene | model/secondary | 2.26e-12 | 1.14e-13 |
| LPG Production | Methyl ethyl ketone | secondary | 2.14e-12 | 1.08e-13 |
| US electric grid | Benzo[a]pyrene | model/secondary | 2.14e-12 | 1.08e-13 |
| US electric grid | Benzo[b,j,k]fluoranthene | model/secondary | 2.13e-12 | 1.08e-13 |

## Table M-33. CRT LCIA Results for the Chronic Public Health Effects Impact Category

| Process Group | Material | LCI Data Type | Chronic Public Toxicity (tox-kg) | % of Total |
|---|---|---|---|---|
| LPG Production | Tetrachloroethylene | secondary | 2.12e-12 | 1.07e-13 |
| US electric grid | Anthracene | model/secondary | 1.97e-12 | 9.96e-14 |
| LPG Production | 1,2-Dichloroethane | secondary | 1.88e-12 | 9.52e-14 |
| LPG Production | Methyl methacrylate | secondary | 1.83e-12 | 9.26e-14 |
| LPG Production | Styrene | secondary | 1.62e-12 | 8.18e-14 |
| LPG Production | Bromoform | secondary | 1.51e-12 | 7.64e-14 |
| LPG Production | Dichloromethane | secondary | 1.49e-12 | 7.54e-14 |
| LPG Production | Chromium (III) | secondary | 1.48e-12 | 7.49e-14 |
| US electric grid | Benzo[a]anthracene | model/secondary | 1.42e-12 | 7.16e-14 |
| LPG Production | Chlorobenzene | secondary | 1.21e-12 | 6.11e-14 |
| LPG Production | Copper (+1 & +2) | secondary | 1.13e-12 | 5.71e-14 |
| US electric grid | Chrysene | model/secondary | 1.03e-12 | 5.19e-14 |
| US electric grid | Indeno(1,2,3-cd)pyrene | model/secondary | 1.01e-12 | 5.09e-14 |
| LPG Production | 2,4-Dinitrotoluene | secondary | 9.70e-13 | 4.90e-14 |
| LPG Production | Acetophenone | secondary | 8.91e-13 | 4.50e-14 |
| US electric grid | Fluorene | model/secondary | 8.00e-13 | 4.04e-14 |
| US electric grid | Fluoranthene | model/secondary | 6.39e-13 | 3.23e-14 |
| LPG Production | o-xylene | secondary | 5.92e-13 | 2.99e-14 |
| US electric grid | Dibenzo[a,h]anthracene | model/secondary | 5.48e-13 | 2.77e-14 |
| US electric grid | 2-Methylnaphthalene | model/secondary | 5.34e-13 | 2.70e-14 |
| US electric grid | Pyrene | model/secondary | 5.29e-13 | 2.67e-14 |
| LPG Production | Ethylbenzene | secondary | 4.80e-13 | 2.42e-14 |
| US electric grid | 5-Methyl chrysene | model/secondary | 3.95e-13 | 1.99e-14 |
| US electric grid | o-xylene | model/secondary | 3.80e-13 | 1.92e-14 |
| US electric grid | Benzo[g,h,i]perylene | model/secondary | 3.61e-13 | 1.82e-14 |
| LPG Production | Methyl tert-butyl ether | secondary | 2.41e-13 | 1.22e-14 |
| LPG Production | Zinc (+2) | secondary | 2.03e-13 | 1.02e-14 |
| LPG Production | Phenanthrene | secondary | 1.96e-13 | 9.88e-15 |
| LPG Production | Vinyl acetate | secondary | 1.71e-13 | 8.66e-15 |
| LPG Production | 3-Methylcholanthrene | secondary | 1.66e-13 | 8.37e-15 |
| LPG Production | Ethylene dibromide | secondary | 1.59e-13 | 8.03e-15 |
| LPG Production | 2-Methylnaphthalene | secondary | 1.04e-13 | 5.24e-15 |
| LPG Production | Chlorine | secondary | 9.19e-14 | 4.64e-15 |
| LPG Production | 1,1,1-Trichloroethane | secondary | 6.53e-14 | 3.30e-15 |
| LPG Production | Acenaphthene | secondary | 6.07e-14 | 3.06e-15 |
| LPG Production | Ethyl Chloride | secondary | 4.63e-14 | 2.34e-15 |
| LPG Production | Cumene | secondary | 3.92e-14 | 1.98e-15 |
| LPG Production | Benzo[a]pyrene | secondary | 3.70e-14 | 1.87e-15 |
| LPG Production | Biphenyl | secondary | 2.34e-14 | 1.18e-15 |
| LPG Production | Lead cmpds | secondary | 2.01e-14 | 1.02e-15 |
| LPG Production | Dibenzo[a,h]anthracene | secondary | 1.92e-14 | 9.71e-16 |
| LPG Production | Acenaphthylene | secondary | 1.85e-14 | 9.33e-16 |
| LPG Production | Anthracene | secondary | 1.82e-14 | 9.20e-16 |
| LPG Production | Nickel cmpds | secondary | 1.70e-14 | 8.60e-16 |
| LPG Production | Benzo[a]anthracene | secondary | 1.65e-14 | 8.31e-16 |
| LPG Production | Benzo[b,j,k]fluoranthene | secondary | 1.27e-14 | 6.42e-16 |
| LPG Production | Indeno(1,2,3-cd)pyrene | secondary | 1.22e-14 | 6.18e-16 |
| LPG Production | Chrysene | secondary | 1.04e-14 | 5.25e-16 |
| LPG Production | HALON-1301 | secondary | 8.76e-15 | 4.43e-16 |
| LPG Production | Benzo[b]fluoranthene | secondary | 6.58e-15 | 3.32e-16 |

## Table M-33. CRT LCIA Results for the Chronic Public Health Effects Impact Category

| Process Group | Material | LCI Data Type | Chronic Public Toxicity (tox-kg) | % of Total |
|---|---|---|---|---|
| LPG Production | Mercury compounds | secondary | 6.11e-15 | 3.09e-16 |
| LPG Production | Fluorene | secondary | 5.70e-15 | 2.88e-16 |
| LPG Production | Pyrene | secondary | 4.93e-15 | 2.49e-16 |
| LPG Production | Benzo[g,h,i]perylene | secondary | 4.79e-15 | 2.42e-16 |
| LPG Production | Fluoranthene | secondary | 4.65e-15 | 2.35e-16 |
| LPG Production | 5-Methyl chrysene | secondary | 2.54e-15 | 1.28e-16 |
| LPG Production | Halogenated matter (organic) | secondary | 2.01e-15 | 1.02e-16 |
| LPG Production | Halogenated hydrocarbons (unspecified) | secondary | 5.04e-18 | 2.55e-19 |
| Natural Gas Prod. | Halogenated hydrocarbons (unspecified) | secondary | -5.91e-18 | -2.98e-19 |
| CRT Incineration | Halogenated hydrocarbons (unspecified) | secondary | -8.69e-17 | -4.39e-18 |
| Fuel Oil #4 Prod. | Halogenated hydrocarbons (unspecified) | secondary | -1.43e-15 | -7.22e-17 |
| Natural Gas Prod. | Halogenated matter (organic) | secondary | -2.37e-15 | -1.20e-16 |
| Natural Gas Prod. | Mercury compounds | secondary | -7.18e-15 | -3.63e-16 |
| Natural Gas Prod. | HALON-1301 | secondary | -1.03e-14 | -5.20e-16 |
| Natural Gas Prod. | Nickel cmpds | secondary | -2.00e-14 | -1.01e-15 |
| Natural Gas Prod. | Lead cmpds | secondary | -2.37e-14 | -1.20e-15 |
| CRT Incineration | Halogenated matter (organic) | secondary | -3.67e-14 | -1.85e-15 |
| CRT Incineration | HALON-1301 | secondary | -1.60e-13 | -8.07e-15 |
| Natural Gas Prod. | 5-Methyl chrysene | secondary | -2.56e-13 | -1.29e-14 |
| CRT Incineration | Nickel cmpds | secondary | -3.10e-13 | -1.57e-14 |
| Fuel Oil #4 Prod. | Halogenated matter (organic) | secondary | -5.72e-13 | -2.89e-14 |
| Natural Gas Prod. | Fluoranthene | secondary | -7.34e-13 | -3.71e-14 |
| Natural Gas Prod. | Fluorene | secondary | -8.22e-13 | -4.15e-14 |
| CRT Incineration | Benzo[b]fluoranthene | secondary | -1.02e-12 | -5.13e-14 |
| Fuel Oil #4 Prod. | 5-Methyl chrysene | secondary | -1.06e-12 | -5.35e-14 |
| Natural Gas Prod. | Pyrene | secondary | -1.23e-12 | -6.20e-14 |
| Natural Gas Prod. | Benzo[b,j,k]fluoranthene | secondary | -1.28e-12 | -6.47e-14 |
| Natural Gas Prod. | Copper (+1 & +2) | secondary | -1.33e-12 | -6.71e-14 |
| Natural Gas Prod. | Benzo[g,h,i]perylene | secondary | -1.60e-12 | -8.09e-14 |
| Fuel Oil #4 Prod. | Mercury compounds | secondary | -1.74e-12 | -8.77e-14 |
| Fuel Oil #4 Prod. | Benzo[g,h,i]perylene | secondary | -1.74e-12 | -8.79e-14 |
| Fuel Oil #4 Prod. | Fluoranthene | secondary | -1.88e-12 | -9.50e-14 |
| Fuel Oil #4 Prod. | Pyrene | secondary | -1.91e-12 | -9.67e-14 |
| Fuel Oil #4 Prod. | Benzo[b]fluoranthene | secondary | -2.26e-12 | -1.14e-13 |
| Fuel Oil #4 Prod. | Fluorene | secondary | -2.32e-12 | -1.17e-13 |
| Natural Gas Prod. | Biphenyl | secondary | -2.35e-12 | -1.19e-13 |
| Fuel Oil #4 Prod. | HALON-1301 | secondary | -2.49e-12 | -1.26e-13 |
| Natural Gas Prod. | Chrysene | secondary | -2.72e-12 | -1.38e-13 |
| CRT Incineration | Dibenzo[a,h]anthracene | secondary | -2.82e-12 | -1.42e-13 |
| Natural Gas Prod. | Aromatic hydrocarbons | secondary | -2.84e-12 | -1.43e-13 |
| Natural Gas Prod. | Benzo[b]fluoranthene | secondary | -3.19e-12 | -1.61e-13 |
| Natural Gas Prod. | Acenaphthylene | secondary | -3.51e-12 | -1.77e-13 |
| Natural Gas Prod. | Indeno(1,2,3-cd)pyrene | secondary | -3.78e-12 | -1.91e-13 |
| Natural Gas Prod. | Cumene | secondary | -3.95e-12 | -1.99e-13 |
| Fuel Oil #4 Prod. | Chrysene | secondary | -3.98e-12 | -2.01e-13 |
| Natural Gas Prod. | Anthracene | secondary | -4.08e-12 | -2.06e-13 |
| Natural Gas Prod. | Benzo[a]anthracene | secondary | -4.29e-12 | -2.17e-13 |
| Fuel Oil #4 Prod. | Indeno(1,2,3-cd)pyrene | secondary | -4.58e-12 | -2.32e-13 |
| Natural Gas Prod. | Ethyl Chloride | secondary | -4.66e-12 | -2.36e-13 |
| Fuel Oil #4 Prod. | Nickel cmpds | secondary | -4.83e-12 | -2.44e-13 |

## Table M-33. CRT LCIA Results for the Chronic Public Health Effects Impact Category

| Process Group | Material | LCI Data Type | Chronic Public Toxicity (tox-kg) | % of Total |
|---|---|---|---|---|
| Fuel Oil #4 Prod. | Benzo[b,j,k]fluoranthene | secondary | -5.29e-12 | -2.67e-13 |
| Fuel Oil #4 Prod. | Lead cmpds | secondary | -5.72e-12 | -2.89e-13 |
| Fuel Oil #4 Prod. | Benzo[a]anthracene | secondary | -6.01e-12 | -3.03e-13 |
| Fuel Oil #4 Prod. | Dibenzo[a,h]anthracene | secondary | -6.53e-12 | -3.30e-13 |
| Natural Gas Prod. | 1,1,1-Trichloroethane | secondary | -6.58e-12 | -3.33e-13 |
| Natural Gas Prod. | Cadmium cmpds | secondary | -7.04e-12 | -3.56e-13 |
| Fuel Oil #4 Prod. | Anthracene | secondary | -7.15e-12 | -3.61e-13 |
| Fuel Oil #4 Prod. | Acenaphthylene | secondary | -7.42e-12 | -3.75e-13 |
| Natural Gas Prod. | Acenaphthene | secondary | -8.90e-12 | -4.50e-13 |
| Natural Gas Prod. | Dibenzo[a,h]anthracene | secondary | -8.91e-12 | -4.50e-13 |
| Fuel Oil #4 Prod. | Biphenyl | secondary | -9.73e-12 | -4.92e-13 |
| Natural Gas Prod. | Benzo[a]pyrene | secondary | -9.90e-12 | -5.00e-13 |
| Fuel Oil #4 Prod. | Benzo[a]pyrene | secondary | -1.48e-11 | -7.47e-13 |
| Natural Gas Prod. | Ethylene dibromide | secondary | -1.60e-11 | -8.09e-13 |
| Fuel Oil #4 Prod. | Cumene | secondary | -1.63e-11 | -8.24e-13 |
| Natural Gas Prod. | Vinyl acetate | secondary | -1.73e-11 | -8.72e-13 |
| CRT Incineration | 2-Methylnaphthalene | secondary | -1.74e-11 | -8.80e-13 |
| Fuel Oil #4 Prod. | Ethyl Chloride | secondary | -1.93e-11 | -9.74e-13 |
| CRT Incineration | Copper (+1 & +2) | secondary | -2.06e-11 | -1.04e-12 |
| Fuel Oil #4 Prod. | Acenaphthene | secondary | -2.28e-11 | -1.15e-12 |
| Natural Gas Prod. | Methyl tert-butyl ether | secondary | -2.42e-11 | -1.22e-12 |
| Fuel Oil #4 Prod. | 1,1,1-Trichloroethane | secondary | -2.72e-11 | -1.37e-12 |
| CRT Incineration | 3-Methylcholanthrene | secondary | -2.78e-11 | -1.41e-12 |
| Fuel Oil #4 Prod. | Chlorine | secondary | -3.16e-11 | -1.59e-12 |
| Natural Gas Prod. | Phenanthrene | secondary | -3.53e-11 | -1.79e-12 |
| Fuel Oil #4 Prod. | 2-Methylnaphthalene | secondary | -3.63e-11 | -1.83e-12 |
| CRT Incineration | Chlorine | secondary | -3.87e-11 | -1.96e-12 |
| CRT Incineration | Benzo[g,h,i]perylene | secondary | -4.06e-11 | -2.05e-12 |
| Natural Gas Prod. | Aluminum (elemental) | secondary | -4.26e-11 | -2.15e-12 |
| CRT Incineration | Aromatic hydrocarbons | secondary | -4.41e-11 | -2.23e-12 |
| CRT Incineration | Zinc (+2) | secondary | -4.48e-11 | -2.26e-12 |
| Natural Gas Prod. | Ethylbenzene | secondary | -4.85e-11 | -2.45e-12 |
| CRT Incineration | Dichlorobenzene (mixed isomers) | secondary | -4.90e-11 | -2.48e-12 |
| Natural Gas Prod. | 2-Methylnaphthalene | secondary | -5.42e-11 | -2.74e-12 |
| Fuel Oil #4 Prod. | 3-Methylcholanthrene | secondary | -5.80e-11 | -2.93e-12 |
| Fuel Oil #4 Prod. | Zinc (+2) | secondary | -6.42e-11 | -3.24e-12 |
| CRT Incineration | 5-Methyl chrysene | secondary | -6.54e-11 | -3.31e-12 |
| Fuel Oil #4 Prod. | Ethylene dibromide | secondary | -6.62e-11 | -3.34e-12 |
| Fuel Oil #4 Prod. | Vinyl acetate | secondary | -7.14e-11 | -3.61e-12 |
| CRT Incineration | Pyrene | secondary | -7.81e-11 | -3.95e-12 |
| Fuel Oil #4 Prod. | Phenanthrene | secondary | -7.87e-11 | -3.97e-12 |
| Natural Gas Prod. | Chromium (III) | secondary | -8.08e-11 | -4.08e-12 |
| Natural Gas Prod. | 3-Methylcholanthrene | secondary | -8.67e-11 | -4.38e-12 |
| Natural Gas Prod. | Acetophenone | secondary | -8.98e-11 | -4.53e-12 |
| Natural Gas Prod. | 2,4-Dinitrotoluene | secondary | -9.77e-11 | -4.94e-12 |
| Fuel Oil #4 Prod. | Methyl tert-butyl ether | secondary | -1.00e-10 | -5.06e-12 |
| CRT Incineration | Fluoranthene | secondary | -1.01e-10 | -5.08e-12 |
| Natural Gas Prod. | Chlorobenzene | secondary | -1.22e-10 | -6.16e-12 |
| CRT Incineration | Fluorene | secondary | -1.29e-10 | -6.51e-12 |
| CRT Incineration | Indeno(1,2,3-cd)pyrene | secondary | -1.40e-10 | -7.05e-12 |

## Table M-33. CRT LCIA Results for the Chronic Public Health Effects Impact Category

| Process Group | Material | LCI Data Type | Chronic Public Toxicity (tox-kg) | % of Total |
|---|---|---|---|---|
| CRT Incineration | Chrysene | secondary | -1.50e-10 | -7.59e-12 |
| Natural Gas Prod. | Dichloromethane | secondary | -1.50e-10 | -7.60e-12 |
| Natural Gas Prod. | Bromoform | secondary | -1.52e-10 | -7.70e-12 |
| Natural Gas Prod. | Barium cmpds | secondary | -1.61e-10 | -8.13e-12 |
| Natural Gas Prod. | Styrene | secondary | -1.63e-10 | -8.24e-12 |
| CRT Incineration | Benzo[a]anthracene | secondary | -1.83e-10 | -9.23e-12 |
| Natural Gas Prod. | Methyl methacrylate | secondary | -1.85e-10 | -9.33e-12 |
| Natural Gas Prod. | 1,2-Dichloroethane | secondary | -1.90e-10 | -9.60e-12 |
| Fuel Oil #4 Prod. | Ethylbenzene | secondary | -1.99e-10 | -1.01e-11 |
| Natural Gas Prod. | Tetrachloroethylene | secondary | -2.14e-10 | -1.08e-11 |
| Natural Gas Prod. | Methyl ethyl ketone | secondary | -2.16e-10 | -1.09e-11 |
| Fuel Oil #4 Prod. | o-xylene | secondary | -2.16e-10 | -1.09e-11 |
| Natural Gas Prod. | Isophorone | secondary | -2.70e-10 | -1.36e-11 |
| Fuel Oil #4 Prod. | Chromium (III) | secondary | -3.09e-10 | -1.56e-11 |
| CRT Incineration | Anthracene | secondary | -3.17e-10 | -1.60e-11 |
| Fuel Oil #4 Prod. | Copper (+1 & +2) | secondary | -3.21e-10 | -1.62e-11 |
| CRT Incineration | Benzo[b,j,k]fluoranthene | secondary | -3.27e-10 | -1.65e-11 |
| CRT Incineration | Benzo[a]pyrene | secondary | -3.57e-10 | -1.80e-11 |
| Fuel Oil #4 Prod. | Acetophenone | secondary | -3.71e-10 | -1.87e-11 |
| CRT Incineration | Acenaphthylene | secondary | -3.72e-10 | -1.88e-11 |
| Natural Gas Prod. | Silicon | secondary | -3.72e-10 | -1.88e-11 |
| Fuel Oil #4 Prod. | 2,4-Dinitrotoluene | secondary | -4.04e-10 | -2.04e-11 |
| Natural Gas Prod. | Chlorine | secondary | -4.75e-10 | -2.40e-11 |
| Fuel Oil #4 Prod. | Chlorobenzene | secondary | -5.04e-10 | -2.55e-11 |
| Natural Gas Prod. | Zinc (+2) | secondary | -5.26e-10 | -2.66e-11 |
| Natural Gas Prod. | Dimethyl sulfate | secondary | -5.59e-10 | -2.82e-11 |
| CRT Incineration | Biphenyl | secondary | -6.02e-10 | -3.04e-11 |
| Fuel Oil #4 Prod. | Dichloromethane | secondary | -6.22e-10 | -3.14e-11 |
| Fuel Oil #4 Prod. | Bromoform | secondary | -6.30e-10 | -3.18e-11 |
| Fuel Oil #4 Prod. | Styrene | secondary | -6.75e-10 | -3.41e-11 |
| Fuel Oil #4 Prod. | Aromatic hydrocarbons | secondary | -6.87e-10 | -3.47e-11 |
| Fuel Oil #4 Prod. | Methyl methacrylate | secondary | -7.64e-10 | -3.86e-11 |
| Fuel Oil #4 Prod. | 1,2-Dichloroethane | secondary | -7.85e-10 | -3.97e-11 |
| Natural Gas Prod. | Acetaldehyde | secondary | -8.03e-10 | -4.06e-11 |
| Fuel Oil #4 Prod. | Tetrachloroethylene | secondary | -8.83e-10 | -4.46e-11 |
| Fuel Oil #4 Prod. | Methyl ethyl ketone | secondary | -8.93e-10 | -4.51e-11 |
| Natural Gas Prod. | Mercury | secondary | -9.44e-10 | -4.77e-11 |
| CRT Incineration | Cumene | secondary | -1.01e-09 | -5.09e-11 |
| Natural Gas Prod. | Di(2-ethylhexyl)phthalate | secondary | -1.01e-09 | -5.10e-11 |
| CRT Incineration | Acenaphthene | secondary | -1.02e-09 | -5.14e-11 |
| CRT Incineration | Aluminum (elemental) | secondary | -1.08e-09 | -5.47e-11 |
| Fuel Oil #4 Prod. | 1,4-Dichlorobenzene | secondary | -1.09e-09 | -5.53e-11 |
| Fuel Oil #4 Prod. | Isophorone | secondary | -1.12e-09 | -5.64e-11 |
| CRT Incineration | Ethyl Chloride | secondary | -1.19e-09 | -6.02e-11 |
| Natural Gas Prod. | Methyl chloride | secondary | -1.40e-09 | -7.07e-11 |
| Natural Gas Prod. | 1,4-Dichlorobenzene | secondary | -1.64e-09 | -8.27e-11 |
| CRT Incineration | 1,1,1-Trichloroethane | secondary | -1.68e-09 | -8.50e-11 |
| Natural Gas Prod. | Acrolein | secondary | -1.69e-09 | -8.53e-11 |
| Fuel Oil #4 Prod. | Cadmium cmpds | secondary | -1.70e-09 | -8.60e-11 |
| Fuel Oil #4 Prod. | Toluene | secondary | -2.04e-09 | -1.03e-10 |

## Table M-33. CRT LCIA Results for the Chronic Public Health Effects Impact Category

| Process Group | Material | LCI Data Type | Chronic Public Toxicity (tox-kg) | % of Total |
|---|---|---|---|---|
| CRT Incineration | Xylene (mixed isomers) | secondary | -2.13e-09 | -1.08e-10 |
| Natural Gas Prod. | o-xylene | secondary | -2.31e-09 | -1.17e-10 |
| Fuel Oil #4 Prod. | Dimethyl sulfate | secondary | -2.31e-09 | -1.17e-10 |
| Natural Gas Prod. | Cobalt | secondary | -2.65e-09 | -1.34e-10 |
| Natural Gas Prod. | Aluminum (+3) | secondary | -2.87e-09 | -1.45e-10 |
| Natural Gas Prod. | Propionaldehyde | secondary | -2.97e-09 | -1.50e-10 |
| Fuel Oil #4 Prod. | Mercury | secondary | -3.11e-09 | -1.57e-10 |
| Natural Gas Prod. | Chloroform | secondary | -3.21e-09 | -1.62e-10 |
| Fuel Oil #4 Prod. | Acetaldehyde | secondary | -3.32e-09 | -1.68e-10 |
| CRT Incineration | Phenanthrene | secondary | -4.02e-09 | -2.03e-10 |
| CRT Incineration | Ethylene dibromide | secondary | -4.09e-09 | -2.07e-10 |
| Fuel Oil #4 Prod. | Di(2-ethylhexyl)phthalate | secondary | -4.17e-09 | -2.11e-10 |
| Natural Gas Prod. | Toluene | secondary | -4.33e-09 | -2.19e-10 |
| CRT Incineration | Vinyl acetate | secondary | -4.41e-09 | -2.23e-10 |
| Natural Gas Prod. | Benzyl chloride | secondary | -4.56e-09 | -2.30e-10 |
| Natural Gas Prod. | PM-10 | secondary | -4.95e-09 | -2.50e-10 |
| Fuel Oil #4 Prod. | Methyl chloride | secondary | -5.79e-09 | -2.92e-10 |
| Natural Gas Prod. | Carbon disulfide | secondary | -5.95e-09 | -3.01e-10 |
| CRT Incineration | Methyl tert-butyl ether | secondary | -6.19e-09 | -3.13e-10 |
| Fuel Oil #4 Prod. | Acrolein | secondary | -6.98e-09 | -3.53e-10 |
| Natural Gas Prod. | Phenol | secondary | -7.32e-09 | -3.70e-10 |
| Natural Gas Prod. | Cadmium | secondary | -8.00e-09 | -4.04e-10 |
| CRT Incineration | Silicon | secondary | -9.47e-09 | -4.78e-10 |
| CRT Incineration | Ethylbenzene | secondary | -1.18e-08 | -5.96e-10 |
| Fuel Oil #4 Prod. | Propionaldehyde | secondary | -1.23e-08 | -6.21e-10 |
| Fuel Oil #4 Prod. | Chloroform | secondary | -1.33e-08 | -6.72e-10 |
| Natural Gas Prod. | Cyanide (-1) | secondary | -1.45e-08 | -7.35e-10 |
| Natural Gas Prod. | Nitrate | secondary | -1.51e-08 | -7.62e-10 |
| Fuel Oil #4 Prod. | Aluminum (elemental) | secondary | -1.61e-08 | -8.13e-10 |
| CRT Incineration | Chromium (III) | secondary | -1.69e-08 | -8.55e-10 |
| Fuel Oil #4 Prod. | Cobalt | secondary | -1.85e-08 | -9.36e-10 |
| Fuel Oil #4 Prod. | Benzyl chloride | secondary | -1.88e-08 | -9.52e-10 |
| Natural Gas Prod. | Manganese | secondary | -1.98e-08 | -1.00e-09 |
| CRT Incineration | Chloroacetophenone | secondary | -2.08e-08 | -1.05e-09 |
| Natural Gas Prod. | Beryllium | secondary | -2.14e-08 | -1.08e-09 |
| Natural Gas Prod. | Lead | secondary | -2.17e-08 | -1.10e-09 |
| CRT Incineration | Acetophenone | secondary | -2.29e-08 | -1.16e-09 |
| Fuel Oil #4 Prod. | Carbon disulfide | secondary | -2.46e-08 | -1.24e-09 |
| CRT Incineration | 2,4-Dinitrotoluene | secondary | -2.50e-08 | -1.26e-09 |
| Natural Gas Prod. | Copper | secondary | -2.65e-08 | -1.34e-09 |
| Natural Gas Prod. | Bromomethane | secondary | -2.77e-08 | -1.40e-09 |
| Natural Gas Prod. | 2-Chloroacetophenone | secondary | -2.80e-08 | -1.42e-09 |
| Natural Gas Prod. | Barium | secondary | -2.96e-08 | -1.49e-09 |
| Natural Gas Prod. | Methyl hydrazine | secondary | -2.99e-08 | -1.51e-09 |
| CRT Incineration | Chlorobenzene | secondary | -3.11e-08 | -1.57e-09 |
| Fuel Oil #4 Prod. | Cadmium | secondary | -3.26e-08 | -1.65e-09 |
| CRT Incineration | Dichloromethane | secondary | -3.82e-08 | -1.93e-09 |
| Fuel Oil #4 Prod. | Barium cmpds | secondary | -3.89e-08 | -1.97e-09 |
| CRT Incineration | Bromoform | secondary | -3.89e-08 | -1.97e-09 |
| CRT Incineration | Styrene | secondary | -4.17e-08 | -2.11e-09 |

## Table M-33. CRT LCIA Results for the Chronic Public Health Effects Impact Category

| Process Group | Material | LCI Data Type | Chronic Public Toxicity (tox-kg) | % of Total |
|---|---|---|---|---|
| CRT Incineration | Aluminum (+3) | secondary | -4.46e-08 | -2.25e-09 |
| CRT Incineration | Methyl methacrylate | secondary | -4.72e-08 | -2.38e-09 |
| CRT Incineration | 1,2-Dichloroethane | secondary | -4.73e-08 | -2.39e-09 |
| CRT Incineration | Dimethylbenzanthracene | secondary | -4.82e-08 | -2.44e-09 |
| CRT Incineration | Tetrachloroethylene | secondary | -5.33e-08 | -2.69e-09 |
| Fuel Oil #4 Prod. | Barium | secondary | -5.46e-08 | -2.76e-09 |
| CRT Incineration | Methyl ethyl ketone | secondary | -5.52e-08 | -2.79e-09 |
| Fuel Oil #4 Prod. | Cyanide (-1) | secondary | -6.02e-08 | -3.04e-09 |
| Natural Gas Prod. | Naphthalene | secondary | -6.61e-08 | -3.34e-09 |
| CRT Incineration | Toluene | secondary | -6.65e-08 | -3.36e-09 |
| Natural Gas Prod. | Hydrogen sulfide | secondary | -6.75e-08 | -3.41e-09 |
| CRT Incineration | Isophorone | secondary | -6.90e-08 | -3.49e-09 |
| Fuel Oil #4 Prod. | Beryllium | secondary | -7.66e-08 | -3.87e-09 |
| Fuel Oil #4 Prod. | Manganese | secondary | -8.00e-08 | -4.04e-09 |
| Fuel Oil #4 Prod. | Naphthalene | secondary | -8.11e-08 | -4.10e-09 |
| Natural Gas Prod. | Nickel | secondary | -8.75e-08 | -4.42e-09 |
| Fuel Oil #4 Prod. | Lead | secondary | -8.90e-08 | -4.50e-09 |
| Fuel Oil #4 Prod. | Dimethylbenzanthracene | secondary | -9.64e-08 | -4.87e-09 |
| CRT Incineration | Mercury | secondary | -1.12e-07 | -5.64e-09 |
| Fuel Oil #4 Prod. | Bromomethane | secondary | -1.15e-07 | -5.79e-09 |
| Fuel Oil #4 Prod. | 2-Chloroacetophenone | secondary | -1.16e-07 | -5.85e-09 |
| CRT Incineration | Phenol | secondary | -1.17e-07 | -5.92e-09 |
| Fuel Oil #4 Prod. | Methyl hydrazine | secondary | -1.24e-07 | -6.25e-09 |
| CRT Incineration | PM-10 | secondary | -1.26e-07 | -6.36e-09 |
| Fuel Oil #4 Prod. | Copper | secondary | -1.34e-07 | -6.77e-09 |
| Fuel Oil #4 Prod. | Silicon | secondary | -1.41e-07 | -7.10e-09 |
| CRT Incineration | Dimethyl sulfate | secondary | -1.43e-07 | -7.21e-09 |
| Natural Gas Prod. | Dimethylbenzanthracene | secondary | -1.44e-07 | -7.28e-09 |
| CRT Incineration | Acetaldehyde | secondary | -2.05e-07 | -1.04e-08 |
| Natural Gas Prod. | Antimony | secondary | -2.24e-07 | -1.13e-08 |
| CRT Incineration | Di(2-ethylhexyl)phthalate | secondary | -2.58e-07 | -1.30e-08 |
| Fuel Oil #4 Prod. | Nitrate | secondary | -3.15e-07 | -1.59e-08 |
| CRT Incineration | Methyl chloride | secondary | -3.58e-07 | -1.81e-08 |
| CRT Incineration | Cobalt | secondary | -3.83e-07 | -1.94e-08 |
| CRT Incineration | Copper | secondary | -4.12e-07 | -2.08e-08 |
| CRT Incineration | Acrolein | secondary | -4.31e-07 | -2.18e-08 |
| Fuel Oil #4 Prod. | Antimony | secondary | -6.39e-07 | -3.23e-08 |
| CRT Incineration | Cadmium | secondary | -6.89e-07 | -3.48e-08 |
| Fuel Oil #4 Prod. | Aluminum (+3) | secondary | -6.94e-07 | -3.51e-08 |
| Natural Gas Prod. | Chromium (VI) | secondary | -7.42e-07 | -3.75e-08 |
| CRT Incineration | Propionaldehyde | secondary | -7.59e-07 | -3.84e-08 |
| CRT Incineration | Chloroform | secondary | -8.07e-07 | -4.08e-08 |
| Natural Gas Prod. | Phosphorus (yellow or white) | secondary | -8.87e-07 | -4.48e-08 |
| CRT Incineration | Pentane | secondary | -9.44e-07 | -4.77e-08 |
| Natural Gas Prod. | Molybdenum | secondary | -1.16e-06 | -5.86e-08 |
| CRT Incineration | Benzyl chloride | secondary | -1.16e-06 | -5.88e-08 |
| CRT Incineration | Hydrogen sulfide | secondary | -1.22e-06 | -6.17e-08 |
| CRT Incineration | Barium | secondary | -1.31e-06 | -6.64e-08 |
| CRT Incineration | Hexane | secondary | -1.51e-06 | -7.61e-08 |
| CRT Incineration | Carbon disulfide | secondary | -1.52e-06 | -7.69e-08 |

## Table M-33. CRT LCIA Results for the Chronic Public Health Effects Impact Category

| Process Group | Material | LCI Data Type | Chronic Public Toxicity (tox-kg) | % of Total |
|---|---|---|---|---|
| Fuel Oil #4 Prod. | Nickel | secondary | -1.64e-06 | -8.31e-08 |
| Natural Gas Prod. | Hydrofluoric acid | secondary | -1.75e-06 | -8.83e-08 |
| Fuel Oil #4 Prod. | Phenol | secondary | -1.75e-06 | -8.86e-08 |
| Fuel Oil #4 Prod. | PM-10 | secondary | -1.87e-06 | -9.45e-08 |
| Fuel Oil #4 Prod. | Pentane | secondary | -1.97e-06 | -9.93e-08 |
| CRT Incineration | Naphthalene | secondary | -2.05e-06 | -1.04e-07 |
| CRT Incineration | Ethane | secondary | -2.25e-06 | -1.14e-07 |
| Fuel Oil #4 Prod. | Hexane | secondary | -2.72e-06 | -1.38e-07 |
| Fuel Oil #4 Prod. | Chromium (VI) | secondary | -2.84e-06 | -1.44e-07 |
| Natural Gas Prod. | Pentane | secondary | -2.94e-06 | -1.48e-07 |
| Fuel Oil #4 Prod. | Zinc (elemental) | secondary | -3.56e-06 | -1.80e-07 |
| CRT Incineration | Nitrate | secondary | -3.60e-06 | -1.82e-07 |
| CRT Incineration | Cyanide (-1) | secondary | -3.72e-06 | -1.88e-07 |
| Natural Gas Prod. | Hexane | secondary | -4.07e-06 | -2.06e-07 |
| Natural Gas Prod. | Zinc (elemental) | secondary | -4.26e-06 | -2.15e-07 |
| CRT Incineration | Beryllium | secondary | -4.59e-06 | -2.32e-07 |
| Fuel Oil #4 Prod. | Ethane | secondary | -4.69e-06 | -2.37e-07 |
| CRT Incineration | Manganese | secondary | -4.89e-06 | -2.47e-07 |
| Natural Gas Prod. | Selenium | secondary | -6.09e-06 | -3.07e-07 |
| Fuel Oil #4 Prod. | Molybdenum | secondary | -6.49e-06 | -3.28e-07 |
| Natural Gas Prod. | Fluorides (F-) | secondary | -6.82e-06 | -3.44e-07 |
| Natural Gas Prod. | Ethane | secondary | -7.01e-06 | -3.54e-07 |
| CRT Incineration | Bromomethane | secondary | -7.08e-06 | -3.58e-07 |
| Fuel Oil #4 Prod. | Hydrofluoric acid | secondary | -7.22e-06 | -3.65e-07 |
| CRT Incineration | Methyl hydrazine | secondary | -7.64e-06 | -3.86e-07 |
| CRT Incineration | Molybdenum | secondary | -9.96e-06 | -5.03e-07 |
| Natural Gas Prod. | Nitrous oxide | secondary | -1.16e-05 | -5.85e-07 |
| CRT Incineration | Nickel | secondary | -1.38e-05 | -6.97e-07 |
| Natural Gas Prod. | Formaldehyde | secondary | -1.39e-05 | -7.02e-07 |
| Fuel Oil #4 Prod. | Ammonia | secondary | -1.74e-05 | -8.79e-07 |
| CRT Incineration | Antimony | secondary | -2.16e-05 | -1.09e-06 |
| CRT Incineration | Zinc (elemental) | secondary | -2.54e-05 | -1.28e-06 |
| Fuel Oil #4 Prod. | Hydrogen sulfide | secondary | -2.55e-05 | -1.29e-06 |
| Fuel Oil #4 Prod. | Fluorides (F-) | secondary | -2.66e-05 | -1.34e-06 |
| Fuel Oil #4 Prod. | Selenium | secondary | -2.69e-05 | -1.36e-06 |
| Natural Gas Prod. | Hydrochloric acid | secondary | -3.20e-05 | -1.62e-06 |
| Natural Gas Prod. | Vanadium | secondary | -3.49e-05 | -1.76e-06 |
| Fuel Oil #4 Prod. | Phosphorus (yellow or white) | secondary | -3.98e-05 | -2.01e-06 |
| CRT Incineration | Phosphorus (yellow or white) | secondary | -5.50e-05 | -2.78e-06 |
| CRT Incineration | Ammonia | secondary | -7.13e-05 | -3.60e-06 |
| Fuel Oil #4 Prod. | Nitrous oxide | secondary | -1.24e-04 | -6.24e-06 |
| Fuel Oil #4 Prod. | Hydrochloric acid | secondary | -1.32e-04 | -6.68e-06 |
| CRT Incineration | Chromium (VI) | secondary | -1.56e-04 | -7.86e-06 |
| Natural Gas Prod. | Arsenic | secondary | -1.58e-04 | -7.97e-06 |
| Natural Gas Prod. | Ammonia | secondary | -2.13e-04 | -1.08e-05 |
| Natural Gas Prod. | Sulfur oxides | secondary | -2.76e-04 | -1.40e-05 |
| Natural Gas Prod. | PM | secondary | -4.15e-04 | -2.10e-05 |
| CRT Incineration | Hydrofluoric acid | secondary | -4.46e-04 | -2.25e-05 |
| CRT Incineration | Formaldehyde | secondary | -4.47e-04 | -2.26e-05 |

## Table M-33. CRT LCIA Results for the Chronic Public Health Effects Impact Category

| Process Group | Material | LCI Data Type | Chronic Public Toxicity (tox-kg) | % of Total |
|---|---|---|---|---|
| Fuel Oil #4 Prod. | Formaldehyde | secondary | -5.52e-04 | -2.79e-05 |
| Fuel Oil #4 Prod. | Arsenic | secondary | -7.57e-04 | -3.82e-05 |
| Fuel Oil #4 Prod. | PM | secondary | -8.70e-04 | -4.40e-05 |
| CRT Incineration | Vanadium | secondary | -1.17e-03 | -5.92e-05 |
| CRT Incineration | Selenium | secondary | -1.53e-03 | -7.74e-05 |
| CRT Incineration | Fluorides (F-) | secondary | -1.57e-03 | -7.93e-05 |
| CRT Incineration | Nitrous oxide | secondary | -2.08e-03 | -1.05e-04 |
| Fuel Oil #4 Prod. | Benzene | secondary | -2.59e-03 | -1.31e-04 |
| CRT Incineration | Benzene | secondary | -3.18e-03 | -1.61e-04 |
| Fuel Oil #4 Prod. | Nitrogen oxides | secondary | -3.86e-03 | -1.95e-04 |
| Fuel Oil #4 Prod. | Vanadium | secondary | -4.33e-03 | -2.19e-04 |
| CRT Incineration | Hydrochloric acid | secondary | -4.66e-03 | -2.35e-04 |
| Fuel Oil #4 Prod. | Sulfur oxides | secondary | -5.27e-03 | -2.66e-04 |
| Fuel Oil #4 Prod. | Methane | secondary | -5.60e-03 | -2.83e-04 |
| Natural Gas Prod. | Nitrogen oxides | secondary | -9.35e-03 | -4.72e-04 |
| CRT Incineration | Carbon monoxide | secondary | -1.56e-02 | -7.88e-04 |
| Fuel Oil #4 Prod. | Carbon monoxide | secondary | -1.63e-02 | -8.23e-04 |
| CRT Incineration | Nitrogen oxides | secondary | -2.51e-02 | -1.27e-03 |
| CRT Incineration | Methane | secondary | -3.03e-02 | -1.53e-03 |
| Natural Gas Prod. | Carbon monoxide | secondary | -3.45e-02 | -1.74e-03 |
| CRT Incineration | PM | secondary | -3.67e-02 | -1.85e-03 |
| Natural Gas Prod. | Benzene | secondary | -3.80e-02 | -1.92e-03 |
| CRT Incineration | Arsenic | secondary | -3.84e-02 | -1.94e-03 |
| Natural Gas Prod. | Methane | secondary | -5.03e-02 | -2.54e-03 |
| CRT Incineration | Sulfur oxides | secondary | -5.39e-02 | -2.73e-03 |
| **Total End-of-life** | | | **1.74e-01** | **8.78e-03** |
| **Total All Life-cycle Stages** | | | **1.98e+03** | **1.00e+02** |

## Table M-34. LCD LCIA Results for the Chronic Public Health Effects Impact Category

| Process Group | Material | LCI Data Type | Chronic Public Toxicity (tox-kg) | % of Total |
|---|---|---|---|---|
| **Materials Processing Life-cycle Stage** | | | | |
| Steel Prod., cold-rolled, semi-finished | Sulfur dioxide | secondary | 1.24e+01 | 1.38e+00 |
| PMMA Sheet Prod. | Sulfur dioxide | secondary | 8.61e+00 | 9.55e-01 |
| Natural Gas Prod. | Methane | secondary | 7.01e+00 | 7.77e-01 |
| Natural Gas Prod. | Benzene | secondary | 5.29e+00 | 5.87e-01 |
| Aluminum Prod. | Sulfur dioxide | secondary | 5.13e+00 | 5.70e-01 |
| Natural Gas Prod. | Carbon monoxide | secondary | 4.80e+00 | 5.32e-01 |
| Polycarbonate Production | Sulfur dioxide | secondary | 4.43e+00 | 4.91e-01 |
| Natural Gas Prod. | Nitrogen oxides | secondary | 1.30e+00 | 1.44e-01 |
| Aluminum Prod. | Titanium tetrachloride | secondary | 2.68e-01 | 2.97e-02 |
| Steel Prod., cold-rolled, semi-finished | Carbon monoxide | secondary | 1.47e-01 | 1.63e-02 |
| Steel Prod., cold-rolled, semi-finished | PM | secondary | 1.03e-01 | 1.14e-02 |
| Aluminum Prod. | Manganese cmpds | secondary | 6.03e-02 | 6.69e-03 |
| Natural Gas Prod. | PM | secondary | 5.78e-02 | 6.42e-03 |
| Aluminum Prod. | Vanadium | secondary | 4.00e-02 | 4.44e-03 |
| Natural Gas Prod. | Sulfur oxides | secondary | 3.85e-02 | 4.27e-03 |
| Natural Gas Prod. | Ammonia | secondary | 2.97e-02 | 3.30e-03 |
| PET Resin Production | Carbon monoxide | secondary | 2.82e-02 | 3.12e-03 |
| PMMA Sheet Prod. | Carbon monoxide | secondary | 2.53e-02 | 2.81e-03 |
| Steel Prod., cold-rolled, semi-finished | Vanadium | secondary | 2.53e-02 | 2.80e-03 |
| Polycarbonate Production | Carbon monoxide | secondary | 2.50e-02 | 2.78e-03 |
| PMMA Sheet Prod. | Methane | secondary | 2.30e-02 | 2.55e-03 |
| Polycarbonate Production | Methane | secondary | 2.27e-02 | 2.52e-03 |
| Natural Gas Prod. | Arsenic | secondary | 2.20e-02 | 2.44e-03 |
| Polycarbonate Production | Nitrogen dioxide | secondary | 2.17e-02 | 2.40e-03 |
| PMMA Sheet Prod. | Nitrogen dioxide | secondary | 2.15e-02 | 2.38e-03 |
| Aluminum Prod. | Arsenic cmpds | secondary | 1.77e-02 | 1.96e-03 |
| Steel Prod., cold-rolled, semi-finished | Nitrogen dioxide | secondary | 1.37e-02 | 1.52e-03 |
| Steel Prod., cold-rolled, semi-finished | Methane | secondary | 1.07e-02 | 1.19e-03 |
| Steel Prod., cold-rolled, semi-finished | Fluorides (F-) | secondary | 9.41e-03 | 1.04e-03 |
| PET Resin Production | Sulfur oxides | secondary | 7.99e-03 | 8.86e-04 |
| Styrene-butadiene Copolymer Prod. | Carbon monoxide | secondary | 7.56e-03 | 8.39e-04 |
| Steel Prod., cold-rolled, semi-finished | Manganese cmpds | secondary | 7.30e-03 | 8.10e-04 |
| Polycarbonate Production | PM | secondary | 7.22e-03 | 8.01e-04 |
| Aluminum Prod. | Carbon monoxide | secondary | 6.93e-03 | 7.69e-04 |
| Aluminum Prod. | PM | secondary | 6.63e-03 | 7.35e-04 |
| PMMA Sheet Prod. | PM | secondary | 6.44e-03 | 7.15e-04 |
| Styrene-butadiene Copolymer Prod. | Nitrogen oxides | secondary | 6.11e-03 | 6.78e-04 |
| Styrene-butadiene Copolymer Prod. | Methane | secondary | 6.00e-03 | 6.66e-04 |
| Aluminum Prod. | Methane | secondary | 5.99e-03 | 6.65e-04 |
| Aluminum Prod. | Nitrogen dioxide | secondary | 5.31e-03 | 5.89e-04 |
| Styrene-butadiene Copolymer Prod. | Sulfur oxides | secondary | 4.99e-03 | 5.54e-04 |
| Natural Gas Prod. | Vanadium | secondary | 4.86e-03 | 5.39e-04 |
| Natural Gas Prod. | Hydrochloric acid | secondary | 4.46e-03 | 4.95e-04 |
| Aluminum Prod. | Barium cmpds | secondary | 3.89e-03 | 4.31e-04 |
| PET Resin Production | Nitrogen oxides | secondary | 3.45e-03 | 3.83e-04 |
| Aluminum Prod. | Selenium | secondary | 2.34e-03 | 2.60e-04 |
| Steel Prod., cold-rolled, semi-finished | Arsenic | secondary | 2.22e-03 | 2.46e-04 |
| PET Resin Production | Methane | secondary | 2.00e-03 | 2.21e-04 |

## Table M-34. LCD LCIA Results for the Chronic Public Health Effects Impact Category

| Process Group | Material | LCI Data Type | Chronic Public Toxicity (tox-kg) | % of Total |
|---|---|---|---|---|
| Steel Prod., cold-rolled, semi-finished | Phosphorus (yellow or white) | secondary | 1.99e-03 | 2.21e-04 |
| Natural Gas Prod. | Formaldehyde | secondary | 1.94e-03 | 2.15e-04 |
| PMMA Sheet Prod. | Ammonia | secondary | 1.64e-03 | 1.82e-04 |
| Natural Gas Prod. | Nitrous oxide | secondary | 1.61e-03 | 1.79e-04 |
| PET Resin Production | PM | secondary | 1.40e-03 | 1.55e-04 |
| Aluminum Prod. | Aluminum (+3) | secondary | 1.18e-03 | 1.31e-04 |
| Steel Prod., cold-rolled, semi-finished | Hydrochloric acid | secondary | 1.00e-03 | 1.11e-04 |
| Natural Gas Prod. | Ethane | secondary | 9.76e-04 | 1.08e-04 |
| Natural Gas Prod. | Fluorides (F-) | secondary | 9.49e-04 | 1.05e-04 |
| Styrene-butadiene Copolymer Prod. | PM | secondary | 8.68e-04 | 9.63e-05 |
| Steel Prod., cold-rolled, semi-finished | Benzene | secondary | 8.62e-04 | 9.56e-05 |
| Steel Prod., cold-rolled, semi-finished | Barium cmpds | secondary | 8.49e-04 | 9.41e-05 |
| Natural Gas Prod. | Selenium | secondary | 8.48e-04 | 9.40e-05 |
| Steel Prod., cold-rolled, semi-finished | Nitrous oxide | secondary | 7.62e-04 | 8.45e-05 |
| Steel Prod., cold-rolled, semi-finished | Arsenic cmpds | secondary | 7.53e-04 | 8.35e-05 |
| Aluminum Prod. | Hydrochloric acid | secondary | 6.64e-04 | 7.37e-05 |
| PMMA Sheet Prod. | Nitrates/nitrites | secondary | 6.47e-04 | 7.18e-05 |
| Steel Prod., cold-rolled, semi-finished | Ammonia | secondary | 6.19e-04 | 6.87e-05 |
| Natural Gas Prod. | Zinc (elemental) | secondary | 5.94e-04 | 6.59e-05 |
| Natural Gas Prod. | Hexane | secondary | 5.67e-04 | 6.29e-05 |
| Steel Prod., cold-rolled, semi-finished | Silicon | secondary | 4.96e-04 | 5.50e-05 |
| Aluminum Prod. | Cadmium cmpds | secondary | 4.36e-04 | 4.84e-05 |
| Natural Gas Prod. | Pentane | secondary | 4.09e-04 | 4.54e-05 |
| Steel Prod., cold-rolled, semi-finished | Titanium tetrachloride | secondary | 4.08e-04 | 4.53e-05 |
| PMMA Sheet Prod. | Hydrogen cyanide | secondary | 3.73e-04 | 4.13e-05 |
| PMMA Sheet Prod. | Hydrochloric acid | secondary | 2.99e-04 | 3.31e-05 |
| Polycarbonate Production | Hydrochloric acid | secondary | 2.60e-04 | 2.88e-05 |
| Natural Gas Prod. | Hydrofluoric acid | secondary | 2.43e-04 | 2.70e-05 |
| Steel Prod., cold-rolled, semi-finished | Ethane | secondary | 2.41e-04 | 2.67e-05 |
| Aluminum Prod. | Benzene | secondary | 2.12e-04 | 2.35e-05 |
| Steel Prod., cold-rolled, semi-finished | Formaldehyde | secondary | 2.03e-04 | 2.26e-05 |
| Aluminum Prod. | Hydrofluoric acid | secondary | 1.79e-04 | 1.99e-05 |
| Polycarbonate Production | Sulfuric acid | secondary | 1.77e-04 | 1.97e-05 |
| Aluminum Prod. | Barium sulfate | secondary | 1.69e-04 | 1.87e-05 |
| Steel Prod., cold-rolled, semi-finished | Titanium | secondary | 1.62e-04 | 1.80e-05 |
| Natural Gas Prod. | Molybdenum | secondary | 1.62e-04 | 1.79e-05 |
| Steel Prod., cold-rolled, semi-finished | Selenium | secondary | 1.47e-04 | 1.63e-05 |
| PET Resin Production | Hydrochloric acid | secondary | 1.45e-04 | 1.61e-05 |
| Polycarbonate Production | Mercury compounds | secondary | 1.36e-04 | 1.51e-05 |
| PMMA Sheet Prod. | Sulfuric acid | secondary | 1.32e-04 | 1.46e-05 |
| Natural Gas Prod. | Phosphorus (yellow or white) | secondary | 1.24e-04 | 1.37e-05 |
| Steel Prod., cold-rolled, semi-finished | Zinc (elemental) | secondary | 1.06e-04 | 1.18e-05 |
| Natural Gas Prod. | Chromium (VI) | secondary | 1.03e-04 | 1.15e-05 |
| Aluminum Prod. | Nitrous oxide | secondary | 1.03e-04 | 1.14e-05 |
| Steel Prod., cold-rolled, semi-finished | Tin (Sn++, Sn4+) | secondary | 1.02e-04 | 1.13e-05 |
| PMMA Sheet Prod. | Mercury compounds | secondary | 1.01e-04 | 1.12e-05 |
| Aluminum Prod. | Perfluoromethane | secondary | 9.65e-05 | 1.07e-05 |
| Steel Prod., cold-rolled, semi-finished | Molybdenum | secondary | 9.21e-05 | 1.02e-05 |
| Polycarbonate Production | Aromatic hydrocarbons | secondary | 9.18e-05 | 1.02e-05 |
| Aluminum Prod. | Titanium | secondary | 8.57e-05 | 9.51e-06 |
| Aluminum Prod. | Zinc (elemental) | secondary | 8.55e-05 | 9.48e-06 |

## Table M-34. LCD LCIA Results for the Chronic Public Health Effects Impact Category

| Process Group | Material | LCI Data Type | Chronic Public Toxicity (tox-kg) | % of Total |
|---|---|---|---|---|
| Aluminum Prod. | Silicon | secondary | 8.14e-05 | 9.03e-06 |
| Aluminum Prod. | Copper (+1 & +2) | secondary | 6.70e-05 | 7.44e-06 |
| Aluminum Prod. | Strontium (Sr II) | secondary | 6.32e-05 | 7.01e-06 |
| PET Resin Production | Sulfuric acid | secondary | 6.24e-05 | 6.93e-06 |
| Styrene-butadiene Copolymer Prod. | Sulfuric acid | secondary | 6.22e-05 | 6.90e-06 |
| Steel Prod., cold-rolled, semi-finished | Barium | secondary | 6.03e-05 | 6.69e-06 |
| Styrene-butadiene Copolymer Prod. | Aromatic hydrocarbons | secondary | 5.93e-05 | 6.58e-06 |
| Polycarbonate Production | Fluorides (F-) | secondary | 5.14e-05 | 5.70e-06 |
| Styrene-butadiene Copolymer Prod. | Mercury compounds | secondary | 4.77e-05 | 5.29e-06 |
| Steel Prod., cold-rolled, semi-finished | Antimony | secondary | 4.67e-05 | 5.18e-06 |
| Steel Prod., cold-rolled, semi-finished | Boron | secondary | 4.20e-05 | 4.66e-06 |
| Steel Prod., cold-rolled, semi-finished | Strontium (Sr II) | secondary | 3.88e-05 | 4.31e-06 |
| PMMA Sheet Prod. | Fluorine | secondary | 3.82e-05 | 4.24e-06 |
| Aluminum Prod. | Nitrate | secondary | 3.40e-05 | 3.77e-06 |
| Natural Gas Prod. | Antimony | secondary | 3.11e-05 | 3.45e-06 |
| Steel Prod., cold-rolled, semi-finished | Silver compounds | secondary | 3.03e-05 | 3.36e-06 |
| Styrene-butadiene Copolymer Prod. | Hydrochloric acid | secondary | 2.98e-05 | 3.31e-06 |
| Steel Prod., cold-rolled, semi-finished | Nitrates/nitrites | secondary | 2.77e-05 | 3.08e-06 |
| Steel Prod., cold-rolled, semi-finished | Chromium (VI) | secondary | 2.53e-05 | 2.81e-06 |
| Steel Prod., cold-rolled, semi-finished | Acetylene | secondary | 2.28e-05 | 2.53e-06 |
| Steel Prod., cold-rolled, semi-finished | Mercury compounds | secondary | 2.22e-05 | 2.46e-06 |
| Natural Gas Prod. | Dimethylbenzanthracene | secondary | 2.01e-05 | 2.23e-06 |
| Steel Prod., cold-rolled, semi-finished | Hydrofluoric acid | secondary | 1.86e-05 | 2.06e-06 |
| PET Resin Production | Fluorine | secondary | 1.81e-05 | 2.01e-06 |
| Styrene-butadiene Copolymer Prod. | Fluorides (F-) | secondary | 1.80e-05 | 2.00e-06 |
| Steel Prod., cold-rolled, semi-finished | Barium sulfate | secondary | 1.68e-05 | 1.87e-06 |
| Steel Prod., cold-rolled, semi-finished | Aluminum (+3) | secondary | 1.54e-05 | 1.71e-06 |
| Aluminum Prod. | Barium | secondary | 1.46e-05 | 1.62e-06 |
| Steel Prod., cold-rolled, semi-finished | Hydrogen sulfide | secondary | 1.33e-05 | 1.48e-06 |
| Steel Prod., cold-rolled, semi-finished | Cadmium cmpds | secondary | 1.32e-05 | 1.47e-06 |
| Aluminum Prod. | Zinc (+2) | secondary | 1.30e-05 | 1.44e-06 |
| Natural Gas Prod. | Nickel | secondary | 1.22e-05 | 1.35e-06 |
| Steel Prod., cold-rolled, semi-finished | Aluminum (elemental) | secondary | 1.21e-05 | 1.34e-06 |
| Aluminum Prod. | Aromatic hydrocarbons | secondary | 1.05e-05 | 1.17e-06 |
| Aluminum Prod. | Nickel cmpds | secondary | 1.01e-05 | 1.12e-06 |
| Natural Gas Prod. | Hydrogen sulfide | secondary | 9.40e-06 | 1.04e-06 |
| Aluminum Prod. | Nickel | secondary | 9.40e-06 | 1.04e-06 |
| Natural Gas Prod. | Naphthalene | secondary | 9.21e-06 | 1.02e-06 |
| Aluminum Prod. | Ammonia | secondary | 9.11e-06 | 1.01e-06 |
| Aluminum Prod. | Copper | secondary | 8.87e-06 | 9.84e-07 |
| Steel Prod., cold-rolled, semi-finished | Pentane | secondary | 8.31e-06 | 9.22e-07 |
| Steel Prod., cold-rolled, semi-finished | Aromatic hydrocarbons | secondary | 7.02e-06 | 7.79e-07 |
| PMMA Sheet Prod. | Hydrofluoric acid | secondary | 6.90e-06 | 7.66e-07 |
| Aluminum Prod. | Fluoride | secondary | 6.78e-06 | 7.52e-07 |
| Aluminum Prod. | Lead cmpds | secondary | 6.49e-06 | 7.20e-07 |
| Aluminum Prod. | Vanadium (V3+, V5+) | secondary | 6.06e-06 | 6.73e-07 |
| Steel Prod., cold-rolled, semi-finished | Copper | secondary | 5.99e-06 | 6.64e-07 |
| Polycarbonate Production | Copper (+1 & +2) | secondary | 5.79e-06 | 6.42e-07 |
| Steel Prod., cold-rolled, semi-finished | Nickel | secondary | 5.67e-06 | 6.29e-07 |

## Table M-34. LCD LCIA Results for the Chronic Public Health Effects Impact Category

| Process Group | Material | LCI Data Type | Chronic Public Toxicity (tox-kg) | % of Total |
|---|---|---|---|---|
| Aluminum Prod. | Nitrites | secondary | 5.46e-06 | 6.05e-07 |
| Aluminum Prod. | Perfluoroethane | secondary | 5.36e-06 | 5.95e-07 |
| Polycarbonate Production | Phenol | secondary | 5.22e-06 | 5.79e-07 |
| Aluminum Prod. | Chromium (VI) | secondary | 5.18e-06 | 5.75e-07 |
| Steel Prod., cold-rolled, semi-finished | Hexane | secondary | 4.34e-06 | 4.82e-07 |
| PMMA Sheet Prod. | Copper (+1 & +2) | secondary | 4.31e-06 | 4.78e-07 |
| Steel Prod., cold-rolled, semi-finished | Copper (+1 & +2) | secondary | 4.21e-06 | 4.67e-07 |
| Natural Gas Prod. | Methyl hydrazine | secondary | 4.17e-06 | 4.62e-07 |
| Polycarbonate Production | Hydrofluoric acid | secondary | 4.13e-06 | 4.58e-07 |
| Natural Gas Prod. | Barium | secondary | 4.12e-06 | 4.57e-07 |
| Aluminum Prod. | Aluminum (elemental) | secondary | 3.92e-06 | 4.35e-07 |
| Natural Gas Prod. | 2-Chloroacetophenone | secondary | 3.90e-06 | 4.33e-07 |
| Natural Gas Prod. | Bromomethane | secondary | 3.86e-06 | 4.28e-07 |
| PMMA Sheet Prod. | Cyanide (-1) | secondary | 3.83e-06 | 4.25e-07 |
| Natural Gas Prod. | Copper | secondary | 3.69e-06 | 4.09e-07 |
| Aluminum Prod. | Molybdenum (Mo II, Mo III, Mo IV, Mo V, Mo VI) | secondary | 3.68e-06 | 4.08e-07 |
| Polycarbonate Production | Ammonia | secondary | 3.27e-06 | 3.63e-07 |
| PMMA Sheet Prod. | Hydrogen sulfide | secondary | 3.07e-06 | 3.40e-07 |
| Natural Gas Prod. | Lead | secondary | 3.03e-06 | 3.36e-07 |
| Natural Gas Prod. | Beryllium | secondary | 2.99e-06 | 3.31e-07 |
| Aluminum Prod. | Hydrogen sulfide | secondary | 2.80e-06 | 3.11e-07 |
| Natural Gas Prod. | Manganese | secondary | 2.76e-06 | 3.06e-07 |
| Aluminum Prod. | Acetic acid | secondary | 2.73e-06 | 3.03e-07 |
| Styrene-butadiene Copolymer Prod. | Nitrate | secondary | 2.53e-06 | 2.81e-07 |
| Natural Gas Prod. | Nitrate | secondary | 2.10e-06 | 2.33e-07 |
| Polycarbonate Production | Halogenated hydrocarbons (unspecified) | secondary | 2.06e-06 | 2.29e-07 |
| Polycarbonate Production | Hydrogen sulfide | secondary | 2.06e-06 | 2.29e-07 |
| PET Resin Production | Copper (+1 & +2) | secondary | 2.04e-06 | 2.26e-07 |
| Styrene-butadiene Copolymer Prod. | Copper (+1 & +2) | secondary | 2.03e-06 | 2.25e-07 |
| Natural Gas Prod. | Cyanide (-1) | secondary | 2.03e-06 | 2.25e-07 |
| Steel Prod., cold-rolled, semi-finished | Bromine | secondary | 1.99e-06 | 2.21e-07 |
| PET Resin Production | Hydrofluoric acid | secondary | 1.82e-06 | 2.01e-07 |
| PMMA Sheet Prod. | Phenol | secondary | 1.75e-06 | 1.94e-07 |
| Steel Prod., cold-rolled, semi-finished | Acetic acid | secondary | 1.74e-06 | 1.93e-07 |
| Steel Prod., cold-rolled, semi-finished | Boric acid | secondary | 1.62e-06 | 1.80e-07 |
| PMMA Sheet Prod. | Aromatic hydrocarbons | secondary | 1.53e-06 | 1.70e-07 |
| Steel Prod., cold-rolled, semi-finished | Strontium | secondary | 1.47e-06 | 1.63e-07 |
| Aluminum Prod. | Cadmium | secondary | 1.25e-06 | 1.39e-07 |
| Natural Gas Prod. | Cadmium | secondary | 1.11e-06 | 1.24e-07 |
| Steel Prod., cold-rolled, semi-finished | Lead | secondary | 1.08e-06 | 1.20e-07 |
| Steel Prod., cold-rolled, semi-finished | Triethylene glycol | secondary | 1.04e-06 | 1.15e-07 |
| Polycarbonate Production | Chlorine | secondary | 1.03e-06 | 1.14e-07 |
| Natural Gas Prod. | Phenol | secondary | 1.02e-06 | 1.13e-07 |
| Aluminum Prod. | Triethylene glycol | secondary | 1.00e-06 | 1.11e-07 |
| Steel Prod., cold-rolled, semi-finished | Cadmium | secondary | 9.71e-07 | 1.08e-07 |
| Aluminum Prod. | Lead | secondary | 8.94e-07 | 9.92e-08 |
| Steel Prod., cold-rolled, semi-finished | Lead cmpds | secondary | 8.65e-07 | 9.60e-08 |
| Steel Prod., cold-rolled, semi-finished | Uranium | secondary | 8.39e-07 | 9.31e-08 |
| Natural Gas Prod. | Carbon disulfide | secondary | 8.29e-07 | 9.20e-08 |
| PMMA Sheet Prod. | Chlorine | secondary | 7.67e-07 | 8.51e-08 |

## Table M-34. LCD LCIA Results for the Chronic Public Health Effects Impact Category

| Process Group | Material | LCI Data Type | Chronic Public Toxicity (tox-kg) | % of Total |
|---|---|---|---|---|
| Steel Prod., cold-rolled, semi-finished | Toluene | secondary | 7.44e-07 | 8.25e-08 |
| Styrene-butadiene Copolymer Prod. | Aluminum (+3) | secondary | 7.23e-07 | 8.02e-08 |
| Natural Gas Prod. | PM-10 | secondary | 6.90e-07 | 7.65e-08 |
| Aluminum Prod. | Toluene | secondary | 6.75e-07 | 7.48e-08 |
| PMMA Sheet Prod. | Nickel cmpds | secondary | 6.48e-07 | 7.19e-08 |
| Natural Gas Prod. | Benzyl chloride | secondary | 6.35e-07 | 7.04e-08 |
| Natural Gas Prod. | Toluene | secondary | 6.03e-07 | 6.69e-08 |
| Steel Prod., cold-rolled, semi-finished | Ethylene | secondary | 6.02e-07 | 6.67e-08 |
| Steel Prod., cold-rolled, semi-finished | Cyanide (-1) | secondary | 5.92e-07 | 6.56e-08 |
| Steel Prod., cold-rolled, semi-finished | Methanol | secondary | 5.84e-07 | 6.48e-08 |
| Steel Prod., cold-rolled, semi-finished | Xylene (mixed isomers) | secondary | 5.50e-07 | 6.10e-08 |
| Steel Prod., cold-rolled, semi-finished | Naphthalene | secondary | 5.46e-07 | 6.05e-08 |
| Steel Prod., cold-rolled, semi-finished | Zinc (+2) | secondary | 5.20e-07 | 5.77e-08 |
| Polycarbonate Production | Aluminum (+3) | secondary | 5.16e-07 | 5.72e-08 |
| Polycarbonate Production | Ethanethiol | secondary | 5.16e-07 | 5.72e-08 |
| Polycarbonate Production | Lead | secondary | 5.16e-07 | 5.72e-08 |
| Polycarbonate Production | Nitrate | secondary | 5.16e-07 | 5.72e-08 |
| Polycarbonate Production | Nitrous oxide | secondary | 5.16e-07 | 5.72e-08 |
| Polycarbonate Production | Zinc (+2) | secondary | 5.16e-07 | 5.72e-08 |
| Aluminum Prod. | Xylene (mixed isomers) | secondary | 5.13e-07 | 5.69e-08 |
| Steel Prod., cold-rolled, semi-finished | Phenol | secondary | 4.75e-07 | 5.27e-08 |
| Steel Prod., cold-rolled, semi-finished | Heptane | secondary | 4.57e-07 | 5.07e-08 |
| Natural Gas Prod. | Chloroform | secondary | 4.48e-07 | 4.97e-08 |
| Steel Prod., cold-rolled, semi-finished | Nickel cmpds | secondary | 4.15e-07 | 4.60e-08 |
| Natural Gas Prod. | Propionaldehyde | secondary | 4.14e-07 | 4.59e-08 |
| Natural Gas Prod. | Aluminum (+3) | secondary | 4.00e-07 | 4.44e-08 |
| Steel Prod., cold-rolled, semi-finished | Cobalt | secondary | 3.97e-07 | 4.40e-08 |
| PMMA Sheet Prod. | Aluminum (+3) | secondary | 3.83e-07 | 4.25e-08 |
| PMMA Sheet Prod. | Ethanethiol | secondary | 3.83e-07 | 4.25e-08 |
| PMMA Sheet Prod. | Lead | secondary | 3.83e-07 | 4.25e-08 |
| PMMA Sheet Prod. | Nitrous oxide | secondary | 3.83e-07 | 4.25e-08 |
| PMMA Sheet Prod. | Zinc (+2) | secondary | 3.83e-07 | 4.25e-08 |
| Natural Gas Prod. | Cobalt | secondary | 3.69e-07 | 4.09e-08 |
| PET Resin Production | Chlorine | secondary | 3.63e-07 | 4.03e-08 |
| Styrene-butadiene Copolymer Prod. | Chlorine | secondary | 3.62e-07 | 4.01e-08 |
| Styrene-butadiene Copolymer Prod. | Hydrofluoric acid | secondary | 3.62e-07 | 4.01e-08 |
| Steel Prod., cold-rolled, semi-finished | Beryllium | secondary | 3.53e-07 | 3.92e-08 |
| Natural Gas Prod. | o-xylene | secondary | 3.21e-07 | 3.56e-08 |
| Aluminum Prod. | Cobalt | secondary | 3.06e-07 | 3.40e-08 |
| Steel Prod., cold-rolled, semi-finished | Vanadium (V3+, V5+) | secondary | 2.91e-07 | 3.23e-08 |
| Aluminum Prod. | Strontium | secondary | 2.83e-07 | 3.14e-08 |
| Steel Prod., cold-rolled, semi-finished | Benzo[a]pyrene | secondary | 2.74e-07 | 3.04e-08 |
| Polycarbonate Production | Mercury | secondary | 2.58e-07 | 2.86e-08 |
| PET Resin Production | Ammonia | secondary | 2.47e-07 | 2.74e-08 |
| Styrene-butadiene Copolymer Prod. | Ammonia | secondary | 2.46e-07 | 2.73e-08 |
| Aluminum Prod. | Phenol | secondary | 2.38e-07 | 2.64e-08 |
| Natural Gas Prod. | Acrolein | secondary | 2.35e-07 | 2.61e-08 |
| Steel Prod., cold-rolled, semi-finished | Boron (B III) | secondary | 2.30e-07 | 2.55e-08 |
| Natural Gas Prod. | 1,4-Dichlorobenzene | secondary | 2.28e-07 | 2.53e-08 |

## Table M-34. LCD LCIA Results for the Chronic Public Health Effects Impact Category

| Process Group | Material | LCI Data Type | Chronic Public Toxicity (tox-kg) | % of Total |
|---|---|---|---|---|
| Styrene-butadiene Copolymer Prod. | Phenol | secondary | 2.15e-07 | 2.39e-08 |
| PET Resin Production | Phenol | secondary | 1.98e-07 | 2.20e-08 |
| Natural Gas Prod. | Methyl chloride | secondary | 1.95e-07 | 2.16e-08 |
| PMMA Sheet Prod. | Mercury | secondary | 1.92e-07 | 2.13e-08 |
| PET Resin Production | Mercury | secondary | 1.82e-07 | 2.01e-08 |
| PET Resin Production | Aluminum (+3) | secondary | 1.82e-07 | 2.01e-08 |
| PET Resin Production | Hydrogen sulfide | secondary | 1.82e-07 | 2.01e-08 |
| PET Resin Production | Lead | secondary | 1.82e-07 | 2.01e-08 |
| PET Resin Production | Nitrate | secondary | 1.82e-07 | 2.01e-08 |
| PET Resin Production | Nitrous oxide | secondary | 1.82e-07 | 2.01e-08 |
| PET Resin Production | Zinc (+2) | secondary | 1.82e-07 | 2.01e-08 |
| Styrene-butadiene Copolymer Prod. | Halogenated hydrocarbons (unspecified) | secondary | 1.81e-07 | 2.01e-08 |
| Styrene-butadiene Copolymer Prod. | Hydrogen sulfide | secondary | 1.81e-07 | 2.01e-08 |
| Styrene-butadiene Copolymer Prod. | Lead | secondary | 1.81e-07 | 2.01e-08 |
| Styrene-butadiene Copolymer Prod. | Nitrous oxide | secondary | 1.81e-07 | 2.01e-08 |
| Styrene-butadiene Copolymer Prod. | Zinc (+2) | secondary | 1.81e-07 | 2.01e-08 |
| Steel Prod., cold-rolled, semi-finished | Manganese | secondary | 1.76e-07 | 1.96e-08 |
| Natural Gas Prod. | Di(2-ethylhexyl)phthalate | secondary | 1.40e-07 | 1.56e-08 |
| Aluminum Prod. | HALON-1301 | secondary | 1.34e-07 | 1.49e-08 |
| Natural Gas Prod. | Mercury | secondary | 1.32e-07 | 1.46e-08 |
| Steel Prod., cold-rolled, semi-finished | Rubidium ion (Rb+) | secondary | 1.19e-07 | 1.32e-08 |
| Natural Gas Prod. | Acetaldehyde | secondary | 1.12e-07 | 1.24e-08 |
| Aluminum Prod. | 1,2-Dichlorotetrafluoroethane | secondary | 9.29e-08 | 1.03e-08 |
| Styrene-butadiene Copolymer Prod. | Mercury | secondary | 9.04e-08 | 1.00e-08 |
| Steel Prod., cold-rolled, semi-finished | Molybdenum (Mo II, Mo III, Mo IV, Mo V, Mo VI) | secondary | 8.89e-08 | 9.86e-09 |
| Steel Prod., cold-rolled, semi-finished | Morpholine | secondary | 8.78e-08 | 9.74e-09 |
| Steel Prod., cold-rolled, semi-finished | Propylene | secondary | 8.67e-08 | 9.62e-09 |
| Steel Prod., cold-rolled, semi-finished | Acetaldehyde | secondary | 7.93e-08 | 8.80e-09 |
| Natural Gas Prod. | Dimethyl sulfate | secondary | 7.78e-08 | 8.63e-09 |
| Aluminum Prod. | Mercury | secondary | 7.51e-08 | 8.33e-09 |
| Natural Gas Prod. | Zinc (+2) | secondary | 7.32e-08 | 8.12e-09 |
| Aluminum Prod. | Cyanide (-1) | secondary | 7.05e-08 | 7.82e-09 |
| Natural Gas Prod. | Chlorine | secondary | 6.61e-08 | 7.33e-09 |
| Steel Prod., cold-rolled, semi-finished | Fluorine | secondary | 5.60e-08 | 6.21e-09 |
| Steel Prod., cold-rolled, semi-finished | Lanthanum | secondary | 5.27e-08 | 5.84e-09 |
| Natural Gas Prod. | Silicon | secondary | 5.19e-08 | 5.75e-09 |
| Aluminum Prod. | Chromium (III) | secondary | 4.88e-08 | 5.42e-09 |
| Steel Prod., cold-rolled, semi-finished | Acetone | secondary | 3.87e-08 | 4.30e-09 |
| Natural Gas Prod. | Isophorone | secondary | 3.76e-08 | 4.17e-09 |
| Natural Gas Prod. | Methyl ethyl ketone | secondary | 3.01e-08 | 3.34e-09 |
| Natural Gas Prod. | Tetrachloroethylene | secondary | 2.97e-08 | 3.30e-09 |
| Steel Prod., cold-rolled, semi-finished | Thorium | secondary | 2.83e-08 | 3.13e-09 |
| Natural Gas Prod. | 1,2-Dichloroethane | secondary | 2.65e-08 | 2.93e-09 |
| Natural Gas Prod. | Methyl methacrylate | secondary | 2.57e-08 | 2.85e-09 |
| Steel Prod., cold-rolled, semi-finished | Ethylbenzene | secondary | 2.57e-08 | 2.85e-09 |
| Steel Prod., cold-rolled, semi-finished | HALON-1301 | secondary | 2.47e-08 | 2.74e-09 |
| Natural Gas Prod. | Styrene | secondary | 2.27e-08 | 2.52e-09 |
| Natural Gas Prod. | Barium cmpds | secondary | 2.24e-08 | 2.49e-09 |
| Natural Gas Prod. | Bromoform | secondary | 2.12e-08 | 2.35e-09 |
| Natural Gas Prod. | Dichloromethane | secondary | 2.10e-08 | 2.32e-09 |

## Table M-34. LCD LCIA Results for the Chronic Public Health Effects Impact Category

| Process Group | Material | LCI Data Type | Chronic Public Toxicity (tox-kg) | % of Total |
|---|---|---|---|---|
| Natural Gas Prod. | Chlorobenzene | secondary | 1.70e-08 | 1.88e-09 |
| Steel Prod., cold-rolled, semi-finished | Tin | secondary | 1.64e-08 | 1.82e-09 |
| Steel Prod., cold-rolled, semi-finished | Mercury | secondary | 1.60e-08 | 1.77e-09 |
| Steel Prod., cold-rolled, semi-finished | Phosphorus pentoxide | secondary | 1.58e-08 | 1.75e-09 |
| Natural Gas Prod. | 2,4-Dinitrotoluene | secondary | 1.36e-08 | 1.51e-09 |
| Steel Prod., cold-rolled, semi-finished | Hydrazine | secondary | 1.30e-08 | 1.44e-09 |
| Steel Prod., cold-rolled, semi-finished | Scandium | secondary | 1.28e-08 | 1.42e-09 |
| Natural Gas Prod. | Acetophenone | secondary | 1.25e-08 | 1.39e-09 |
| Natural Gas Prod. | 3-Methylcholanthrene | secondary | 1.21e-08 | 1.34e-09 |
| Natural Gas Prod. | Chromium (III) | secondary | 1.13e-08 | 1.25e-09 |
| Steel Prod., cold-rolled, semi-finished | Chlorine | secondary | 1.12e-08 | 1.24e-09 |
| Steel Prod., cold-rolled, semi-finished | Thallium | secondary | 8.72e-09 | 9.67e-10 |
| Natural Gas Prod. | 2-Methylnaphthalene | secondary | 7.56e-09 | 8.38e-10 |
| Natural Gas Prod. | Ethylbenzene | secondary | 6.75e-09 | 7.49e-10 |
| Steel Prod., cold-rolled, semi-finished | Zirconium | secondary | 6.73e-09 | 7.47e-10 |
| Natural Gas Prod. | Aluminum (elemental) | secondary | 5.93e-09 | 6.58e-10 |
| Natural Gas Prod. | Phenanthrene | secondary | 4.92e-09 | 5.46e-10 |
| Natural Gas Prod. | Methyl tert-butyl ether | secondary | 3.38e-09 | 3.75e-10 |
| Steel Prod., cold-rolled, semi-finished | Nitrites | secondary | 2.76e-09 | 3.06e-10 |
| Steel Prod., cold-rolled, semi-finished | Chromium (III) | secondary | 2.59e-09 | 2.88e-10 |
| Natural Gas Prod. | Vinyl acetate | secondary | 2.40e-09 | 2.67e-10 |
| Natural Gas Prod. | Ethylene dibromide | secondary | 2.23e-09 | 2.47e-10 |
| Steel Prod., cold-rolled, semi-finished | Edetic acid (EDTA) | secondary | 1.89e-09 | 2.10e-10 |
| Steel Prod., cold-rolled, semi-finished | Hypochlorous acid | secondary | 1.72e-09 | 1.91e-10 |
| Steel Prod., cold-rolled, semi-finished | Cobalt (Co I, Co II, Co III) | secondary | 1.54e-09 | 1.71e-10 |
| Natural Gas Prod. | Benzo[a]pyrene | secondary | 1.38e-09 | 1.53e-10 |
| Natural Gas Prod. | Dibenzo[a,h]anthracene | secondary | 1.24e-09 | 1.38e-10 |
| Natural Gas Prod. | Acenaphthene | secondary | 1.24e-09 | 1.37e-10 |
| Natural Gas Prod. | Cadmium cmpds | secondary | 9.81e-10 | 1.09e-10 |
| Natural Gas Prod. | 1,1,1-Trichloroethane | secondary | 9.17e-10 | 1.02e-10 |
| Steel Prod., cold-rolled, semi-finished | Dichloromethane | secondary | 7.33e-10 | 8.13e-11 |
| Natural Gas Prod. | Ethyl Chloride | secondary | 6.50e-10 | 7.21e-11 |
| Natural Gas Prod. | Benzo[a]anthracene | secondary | 5.98e-10 | 6.63e-11 |
| Natural Gas Prod. | Anthracene | secondary | 5.68e-10 | 6.30e-11 |
| Natural Gas Prod. | Cumene | secondary | 5.50e-10 | 6.10e-11 |
| Natural Gas Prod. | Indeno(1,2,3-cd)pyrene | secondary | 5.26e-10 | 5.83e-11 |
| Natural Gas Prod. | Acenaphthylene | secondary | 4.89e-10 | 5.42e-11 |
| Natural Gas Prod. | Benzo[b]fluoranthene | secondary | 4.45e-10 | 4.93e-11 |
| Natural Gas Prod. | Aromatic hydrocarbons | secondary | 3.95e-10 | 4.39e-11 |
| Natural Gas Prod. | Chrysene | secondary | 3.79e-10 | 4.21e-11 |
| Natural Gas Prod. | Biphenyl | secondary | 3.28e-10 | 3.64e-11 |
| Natural Gas Prod. | Benzo[g,h,i]perylene | secondary | 2.23e-10 | 2.47e-11 |
| Steel Prod., cold-rolled, semi-finished | Isopropylpropionate | secondary | 1.98e-10 | 2.20e-11 |
| Natural Gas Prod. | Copper (+1 & +2) | secondary | 1.85e-10 | 2.05e-11 |
| Natural Gas Prod. | Benzo[b,j,k]fluoranthene | secondary | 1.78e-10 | 1.98e-11 |
| Natural Gas Prod. | Pyrene | secondary | 1.71e-10 | 1.90e-11 |
| Natural Gas Prod. | Fluorene | secondary | 1.14e-10 | 1.27e-11 |
| Natural Gas Prod. | Fluoranthene | secondary | 1.02e-10 | 1.13e-11 |
| Steel Prod., cold-rolled, semi-finished | Lithium salts | secondary | 9.71e-11 | 1.08e-11 |

## Table M-34. LCD LCIA Results for the Chronic Public Health Effects Impact Category

| Process Group | Material | LCI Data Type | Chronic Public Toxicity (tox-kg) | % of Total |
|---|---|---|---|---|
| Steel Prod., cold-rolled, semi-finished | Perfluoromethane | secondary | 4.40e-11 | 4.88e-12 |
| Natural Gas Prod. | 5-Methyl chrysene | secondary | 3.57e-11 | 3.96e-12 |
| Steel Prod., cold-rolled, semi-finished | Chloroform | secondary | 2.69e-11 | 2.98e-12 |
| Natural Gas Prod. | Lead cmpds | secondary | 3.30e-12 | 3.66e-13 |
| Natural Gas Prod. | Nickel cmpds | secondary | 2.78e-12 | 3.09e-13 |
| Natural Gas Prod. | HALON-1301 | secondary | 1.43e-12 | 1.59e-13 |
| Natural Gas Prod. | Mercury compounds | secondary | 1.00e-12 | 1.11e-13 |
| Steel Prod., cold-rolled, semi-finished | Trichloroethylene | secondary | 3.88e-13 | 4.30e-14 |
| Natural Gas Prod. | Halogenated matter (organic) | secondary | 3.29e-13 | 3.65e-14 |
| Steel Prod., cold-rolled, semi-finished | Propionaldehyde | secondary | 1.02e-13 | 1.13e-14 |
| Steel Prod., cold-rolled, semi-finished | Benzaldehyde | secondary | 3.01e-14 | 3.34e-15 |
| Steel Prod., cold-rolled, semi-finished | Tetrachloroethylene | secondary | 1.08e-14 | 1.20e-15 |
| Steel Prod., cold-rolled, semi-finished | 1,1,1-Trichloroethane | secondary | 1.57e-15 | 1.75e-16 |
| Natural Gas Prod. | Halogenated hydrocarbons (unspecified) | secondary | 8.23e-16 | 9.13e-17 |
| Steel Prod., cold-rolled, semi-finished | Hexachloroethane | secondary | 6.03e-17 | 6.69e-18 |
| **Total Materials Processing** | | | **5.01e+01** | **5.56e+00** |
| **Manufacturing Life-cycle Stage** | | | | |
| Japanese Electric Grid | Sulfur dioxide | model/secondary | 1.92e+02 | 2.12e+01 |
| Monitor/module | Phosphine | primary | 2.87e+01 | 3.18e+00 |
| Monitor/module | Phosphorus (yellow or white) | primary | 3.42e+00 | 3.79e-01 |
| US electric grid | Sulfur dioxide | model/secondary | 3.19e+00 | 3.54e-01 |
| Monitor/module | Fluorides (F-) | primary | 2.55e+00 | 2.83e-01 |
| Monitor/module | Tetramethyl ammonium hydroxide | primary | 1.29e+00 | 1.43e-01 |
| Monitor/module | Nitrogen oxides | primary | 1.10e+00 | 1.22e-01 |
| Monitor/module | Nitrogen fluoride | primary | 4.91e-01 | 5.44e-02 |
| Monitor/module | Hydrochloric acid | primary | 2.77e-01 | 3.08e-02 |
| LPG Production | Carbon monoxide | secondary | 2.77e-01 | 3.07e-02 |
| Japanese Electric Grid | Nitrogen oxides | model/secondary | 2.73e-01 | 3.03e-02 |
| Monitor/module | Ammonia | primary | 1.69e-01 | 1.88e-02 |
| Natural Gas Prod. | Methane | secondary | 1.58e-01 | 1.75e-02 |
| Japanese Electric Grid | Carbon monoxide | model/secondary | 1.27e-01 | 1.41e-02 |
| Natural Gas Prod. | Benzene | secondary | 1.19e-01 | 1.32e-02 |
| Natural Gas Prod. | Carbon monoxide | secondary | 1.08e-01 | 1.20e-02 |
| Monitor/module | Hydrofluoric acid | primary | 1.04e-01 | 1.16e-02 |
| LPG Production | Methane | secondary | 8.05e-02 | 8.93e-03 |
| LPG Production | Sulfur oxides | secondary | 7.69e-02 | 8.53e-03 |
| Japanese Electric Grid | Vanadium | model/secondary | 7.63e-02 | 8.46e-03 |
| Backlight | Nitrogen oxides | primary | 5.89e-02 | 6.53e-03 |
| LPG Production | Nitrogen oxides | secondary | 5.50e-02 | 6.10e-03 |
| LPG Production | Vanadium | secondary | 5.02e-02 | 5.57e-03 |
| LPG Production | Benzene | secondary | 4.12e-02 | 4.57e-03 |
| Japanese Electric Grid | Arsenic | model/secondary | 3.51e-02 | 3.89e-03 |
| Natural Gas Prod. | Nitrogen oxides | secondary | 2.94e-02 | 3.26e-03 |
| LCD glass mfg. | Fluorides (F-) | primary | 2.71e-02 | 3.01e-03 |
| Monitor/module | Isopropyl alcohol | primary | 2.23e-02 | 2.47e-03 |
| Japanese Electric Grid | Hydrochloric acid | model/secondary | 2.11e-02 | 2.34e-03 |
| Panel components | Phosphorus (yellow or white) | primary | 1.97e-02 | 2.19e-03 |
| Monitor/module | N-bromoacetamide | primary | 1.84e-02 | 2.04e-03 |
| Monitor/module | Sulfur hexafluoride | primary | 1.46e-02 | 1.62e-03 |
| Japanese Electric Grid | PM-10 | model/secondary | 1.34e-02 | 1.49e-03 |

## Table M-34. LCD LCIA Results for the Chronic Public Health Effects Impact Category

| Process Group | Material | LCI Data Type | Chronic Public Toxicity (tox-kg) | % of Total |
|---|---|---|---|---|
| LPG Production | PM -- | secondary | 1.24e-02 | 1.37e-03 |
| LPG Production | Arsenic | secondary | 9.91e-03 | 1.10e-03 |
| LPG Production | Formaldehyde | secondary | 6.43e-03 | 7.14e-04 |
| US electric grid | Nitrogen oxides | model/secondary | 4.56e-03 | 5.06e-04 |
| Japanese Electric Grid | Fluorides (F-) | model/secondary | 4.43e-03 | 4.91e-04 |
| Japanese Electric Grid | Selenium | model/secondary | 4.29e-03 | 4.76e-04 |
| LCD glass mfg. | Nitrogen oxides | primary | 4.09e-03 | 4.54e-04 |
| Japanese Electric Grid | Formaldehyde | model/secondary | 3.93e-03 | 4.36e-04 |
| Monitor/module | Monosilane | primary | 3.07e-03 | 3.41e-04 |
| US electric grid | Methane | model/secondary | 2.50e-03 | 2.77e-04 |
| Fuel Oil #4 Prod. | Carbon monoxide | secondary | 2.34e-03 | 2.59e-04 |
| Monitor/module | Sulfur oxides | primary | 2.23e-03 | 2.47e-04 |
| US electric grid | Carbon monoxide | model/secondary | 2.11e-03 | 2.34e-04 |
| Japanese Electric Grid | Zinc (elemental) | model/secondary | 2.06e-03 | 2.29e-04 |
| PWB Mfg. | Formaldehyde | model/secondary | 1.96e-03 | 2.18e-04 |
| LPG Production | Hydrochloric acid | secondary | 1.77e-03 | 1.96e-04 |
| Monitor/module | Arsenic | primary | 1.70e-03 | 1.88e-04 |
| LPG Production | Nitrous oxide | secondary | 1.56e-03 | 1.73e-04 |
| Monitor/module | Acetic acid | primary | 1.44e-03 | 1.60e-04 |
| Natural Gas Prod. | PM | secondary | 1.31e-03 | 1.45e-04 |
| Monitor/module | Hexane | primary | 1.18e-03 | 1.31e-04 |
| Japanese Electric Grid | Hydrofluoric acid | model/secondary | 1.15e-03 | 1.28e-04 |
| Japanese Electric Grid | Antimony | model/secondary | 1.09e-03 | 1.21e-04 |
| US electric grid | Arsenic | model/secondary | 1.08e-03 | 1.20e-04 |
| Fuel Oil #6 Prod. | Carbon monoxide | secondary | 9.64e-04 | 1.07e-04 |
| US electric grid | Hydrochloric acid | model/secondary | 9.54e-04 | 1.06e-04 |
| Natural Gas Prod. | Sulfur oxides | secondary | 8.69e-04 | 9.64e-05 |
| Panel components | Nitrogen oxides | primary | 8.22e-04 | 9.12e-05 |
| Fuel Oil #4 Prod. | Methane | secondary | 8.03e-04 | 8.91e-05 |
| Fuel Oil #2 Prod. | Carbon monoxide | secondary | 7.85e-04 | 8.71e-05 |
| Fuel Oil #4 Prod. | Sulfur oxides | secondary | 7.55e-04 | 8.37e-05 |
| Japanese Electric Grid | Nitrous oxide | model/secondary | 7.52e-04 | 8.34e-05 |
| Natural Gas Prod. | Ammonia | secondary | 6.71e-04 | 7.44e-05 |
| Fuel Oil #4 Prod. | Vanadium | secondary | 6.21e-04 | 6.89e-05 |
| Fuel Oil #4 Prod. | Nitrogen oxides | secondary | 5.53e-04 | 6.14e-05 |
| Japanese Electric Grid | Methane | model/secondary | 5.47e-04 | 6.07e-05 |
| Monitor/module | Nitric acid | primary | 5.37e-04 | 5.96e-05 |
| Natural Gas Prod. | Arsenic | secondary | 4.96e-04 | 5.50e-05 |
| LPG Production | Phosphorus (yellow or white) | secondary | 4.71e-04 | 5.22e-05 |
| Japanese Electric Grid | Molybdenum | model/secondary | 4.43e-04 | 4.91e-05 |
| Fuel Oil #6 Prod. | Methane | secondary | 4.01e-04 | 4.45e-05 |
| Fuel Oil #6 Prod. | Sulfur oxides | secondary | 3.72e-04 | 4.13e-05 |
| Fuel Oil #4 Prod. | Benzene | secondary | 3.71e-04 | 4.12e-05 |
| Fuel Oil #6 Prod. | Vanadium | secondary | 3.67e-04 | 4.07e-05 |
| LPG Production | Fluorides (F-) | secondary | 3.62e-04 | 4.01e-05 |
| LPG Production | Selenium | secondary | 3.56e-04 | 3.94e-05 |
| Monitor/module | Zinc (elemental) | primary | 3.13e-04 | 3.48e-05 |
| Japanese Electric Grid | Benzene | model/secondary | 3.06e-04 | 3.40e-05 |
| LPG Production | Hydrogen sulfide | secondary | 2.94e-04 | 3.26e-05 |

## Table M-34. LCD LCIA Results for the Chronic Public Health Effects Impact Category

| Process Group | Material | LCI Data Type | Chronic Public Toxicity (tox-kg) | % of Total |
|---|---|---|---|---|
| LPG Production | Ammonia | secondary | 2.84e-04 | 3.15e-05 |
| Panel components | HCFC-225ca | primary | 2.80e-04 | 3.10e-05 |
| Panel components | HCFC-225cb | primary | 2.80e-04 | 3.10e-05 |
| Fuel Oil #6 Prod. | Nitrogen oxides | secondary | 2.79e-04 | 3.09e-05 |
| Fuel Oil #2 Prod. | Methane | secondary | 2.40e-04 | 2.66e-05 |
| Monitor/module | Phosphoric acid | primary | 2.33e-04 | 2.59e-05 |
| Fuel Oil #2 Prod. | Sulfur oxides | secondary | 2.27e-04 | 2.52e-05 |
| US electric grid | PM-10 | model/secondary | 2.24e-04 | 2.48e-05 |
| US electric grid | Selenium | model/secondary | 1.80e-04 | 1.99e-05 |
| Japanese Electric Grid | Nickel | model/secondary | 1.67e-04 | 1.86e-05 |
| Fuel Oil #6 Prod. | Benzene | secondary | 1.67e-04 | 1.85e-05 |
| Fuel Oil #2 Prod. | Nitrogen oxides | secondary | 1.64e-04 | 1.82e-05 |
| Fuel Oil #2 Prod. | Vanadium | secondary | 1.61e-04 | 1.79e-05 |
| US electric grid | Vanadium | model/secondary | 1.35e-04 | 1.50e-05 |
| Fuel Oil #4 Prod. | PM | secondary | 1.25e-04 | 1.38e-05 |
| Fuel Oil #2 Prod. | Benzene | secondary | 1.19e-04 | 1.32e-05 |
| Natural Gas Prod. | Vanadium | secondary | 1.10e-04 | 1.22e-05 |
| Fuel Oil #4 Prod. | Arsenic | secondary | 1.09e-04 | 1.20e-05 |
| Natural Gas Prod. | Hydrochloric acid | secondary | 1.01e-04 | 1.12e-05 |
| Japanese Electric Grid | Barium | model/secondary | 9.88e-05 | 1.10e-05 |
| Monitor/module | Diethylene glycol | primary | 9.79e-05 | 1.09e-05 |
| LPG Production | Hydrofluoric acid | secondary | 9.63e-05 | 1.07e-05 |
| Backlight | Diethyl ether | primary | 9.49e-05 | 1.05e-05 |
| Fuel Oil #4 Prod. | Formaldehyde | secondary | 7.92e-05 | 8.78e-06 |
| LPG Production | Molybdenum | secondary | 7.91e-05 | 8.77e-06 |
| LPG Production | Chromium (VI) | secondary | 7.57e-05 | 8.39e-06 |
| LPG Production | Ethane | secondary | 7.44e-05 | 8.26e-06 |
| Fuel Oil #6 Prod. | PM | secondary | 6.29e-05 | 6.98e-06 |
| Fuel Oil #6 Prod. | Arsenic | secondary | 5.87e-05 | 6.51e-06 |
| LPG Production | Zinc (elemental) | secondary | 5.75e-05 | 6.38e-06 |
| Japanese Electric Grid | Naphthalene | model/secondary | 5.57e-05 | 6.18e-06 |
| Panel components | PM | primary | 5.48e-05 | 6.08e-06 |
| US electric grid | Hydrofluoric acid | model/secondary | 5.21e-05 | 5.78e-06 |
| Fuel Oil #6 Prod. | Formaldehyde | secondary | 4.66e-05 | 5.17e-06 |
| Natural Gas Prod. | Formaldehyde | secondary | 4.37e-05 | 4.85e-06 |
| LPG Production | Hexane | secondary | 4.33e-05 | 4.80e-06 |
| Monitor/module | Antimony | primary | 3.89e-05 | 4.32e-06 |
| Fuel Oil #2 Prod. | PM | secondary | 3.69e-05 | 4.10e-06 |
| Natural Gas Prod. | Nitrous oxide | secondary | 3.64e-05 | 4.04e-06 |
| LPG Production | Phenol | secondary | 3.43e-05 | 3.81e-06 |
| Japanese Electric Grid | Chromium (VI) | model/secondary | 3.36e-05 | 3.73e-06 |
| Panel components | Hydrochloric acid | primary | 3.35e-05 | 3.72e-06 |
| Panel components | Heptane | primary | 3.28e-05 | 3.63e-06 |
| LPG Production | Pentane | secondary | 3.12e-05 | 3.46e-06 |
| Fuel Oil #2 Prod. | Arsenic | secondary | 3.04e-05 | 3.38e-06 |
| Japanese Electric Grid | Copper | model/secondary | 2.40e-05 | 2.67e-06 |
| Monitor/module | Acetone | primary | 2.22e-05 | 2.46e-06 |
| Natural Gas Prod. | Ethane | secondary | 2.20e-05 | 2.44e-06 |
| Monitor/module | PM | primary | 2.20e-05 | 2.44e-06 |
| LPG Production | PM-10 | secondary | 2.16e-05 | 2.40e-06 |
| Natural Gas Prod. | Fluorides (F-) | secondary | 2.14e-05 | 2.38e-06 |

## Table M-34. LCD LCIA Results for the Chronic Public Health Effects Impact Category

| Process Group | Material | LCI Data Type | Chronic Public Toxicity (tox-kg) | % of Total |
|---|---|---|---|---|
| Monitor/module | Copper | primary | 2.06e-05 | 2.29e-06 |
| Fuel Oil #2 Prod. | Formaldehyde | secondary | 2.06e-05 | 2.28e-06 |
| LPG Production | Nickel | secondary | 1.98e-05 | 2.19e-06 |
| Japanese Electric Grid | Methyl hydrazine | model/secondary | 1.98e-05 | 2.19e-06 |
| Monitor/module | Polychlorinated biphenyls | primary | 1.94e-05 | 2.15e-06 |
| Natural Gas Prod. | Selenium | secondary | 1.91e-05 | 2.12e-06 |
| Fuel Oil #4 Prod. | Hydrochloric acid | secondary | 1.90e-05 | 2.10e-06 |
| US electric grid | Formaldehyde | model/secondary | 1.88e-05 | 2.08e-06 |
| Japanese Electric Grid | 2-Chloroacetophenone | model/secondary | 1.85e-05 | 2.05e-06 |
| Japanese Electric Grid | Bromomethane | model/secondary | 1.83e-05 | 2.03e-06 |
| Fuel Oil #4 Prod. | Nitrous oxide | secondary | 1.77e-05 | 1.97e-06 |
| Monitor/module | Chromium | primary | 1.77e-05 | 1.96e-06 |
| Monitor/module | Chromium (VI) | primary | 1.71e-05 | 1.89e-06 |
| LPG Production | Aluminum (+3) | secondary | 1.36e-05 | 1.51e-06 |
| US electric grid | Benzene | model/secondary | 1.35e-05 | 1.50e-06 |
| Natural Gas Prod. | Zinc (elemental) | secondary | 1.34e-05 | 1.49e-06 |
| US electric grid | Nitrous oxide | model/secondary | 1.32e-05 | 1.46e-06 |
| Natural Gas Prod. | Hexane | secondary | 1.28e-05 | 1.42e-06 |
| Monitor/module | Lead | primary | 1.23e-05 | 1.37e-06 |
| Monitor/module | Boron | primary | 1.08e-05 | 1.20e-06 |
| LPG Production | Antimony | secondary | 1.03e-05 | 1.14e-06 |
| LCD glass mfg. | PM | primary | 1.01e-05 | 1.12e-06 |
| Fuel Oil #6 Prod. | Hydrochloric acid | secondary | 1.01e-05 | 1.12e-06 |
| Fuel Oil #6 Prod. | Nitrous oxide | secondary | 9.88e-06 | 1.10e-06 |
| Japanese Electric Grid | Cyanide (-1) | model/secondary | 9.61e-06 | 1.07e-06 |
| Natural Gas Prod. | Pentane | secondary | 9.24e-06 | 1.02e-06 |
| Panel components | Toluene | primary | 9.09e-06 | 1.01e-06 |
| Japanese Electric Grid | Cobalt | model/secondary | 7.96e-06 | 8.83e-07 |
| US electric grid | Phosphorus (yellow or white) | model/secondary | 7.61e-06 | 8.44e-07 |
| Japanese Electric Grid | 2,3,7,8-TCDD | model/secondary | 7.49e-06 | 8.30e-07 |
| LPG Production | Nitrate | secondary | 5.81e-06 | 6.45e-07 |
| Fuel Oil #4 Prod. | Phosphorus (yellow or white) | secondary | 5.71e-06 | 6.33e-07 |
| Natural Gas Prod. | Hydrofluoric acid | secondary | 5.49e-06 | 6.09e-07 |
| Japanese Electric Grid | Cadmium | model/secondary | 5.39e-06 | 5.98e-07 |
| Fuel Oil #2 Prod. | Hydrochloric acid | secondary | 5.39e-06 | 5.98e-07 |
| Fuel Oil #2 Prod. | Nitrous oxide | secondary | 4.84e-06 | 5.37e-07 |
| LCD glass mfg. | Sulfur oxides | primary | 4.71e-06 | 5.22e-07 |
| LCD glass mfg. | Lead | primary | 4.02e-06 | 4.46e-07 |
| Japanese Electric Grid | Carbon disulfide | model/secondary | 3.93e-06 | 4.36e-07 |
| Fuel Oil #4 Prod. | Selenium | secondary | 3.85e-06 | 4.27e-07 |
| Fuel Oil #4 Prod. | Fluorides (F-) | secondary | 3.81e-06 | 4.23e-07 |
| Monitor/module | Cyanide (-1) | primary | 3.66e-06 | 4.06e-07 |
| Fuel Oil #4 Prod. | Hydrogen sulfide | secondary | 3.65e-06 | 4.05e-07 |
| Natural Gas Prod. | Molybdenum | secondary | 3.65e-06 | 4.05e-07 |
| US electric grid | Zinc (elemental) | model/secondary | 3.51e-06 | 3.89e-07 |
| Fuel Oil #6 Prod. | Phosphorus (yellow or white) | secondary | 3.33e-06 | 3.69e-07 |
| Japanese Electric Grid | Benzyl chloride | model/secondary | 3.01e-06 | 3.34e-07 |
| US electric grid | Antimony | model/secondary | 2.88e-06 | 3.20e-07 |
| LCD glass mfg. | Carbon monoxide | primary | 2.79e-06 | 3.10e-07 |

## Table M-34. LCD LCIA Results for the Chronic Public Health Effects Impact Category

| Process Group | Material | LCI Data Type | Chronic Public Toxicity (tox-kg) | % of Total |
|---|---|---|---|---|
| Natural Gas Prod. | Phosphorus (yellow or white) | secondary | 2.79e-06 | 3.09e-07 |
| Monitor/module | Hexamethyldisilizane | primary | 2.75e-06 | 3.04e-07 |
| Fuel Oil #4 Prod. | Ammonia | secondary | 2.49e-06 | 2.77e-07 |
| Natural Gas Prod, | Chromium (VI) | secondary | 2.33e-06 | 2.59e-07 |
| Monitor/module | Cyclohexane | primary | 2.22e-06 | 2.46e-07 |
| Fuel Oil #6 Prod. | Hydrogen sulfide | secondary | 2.16e-06 | 2.40e-07 |
| Japanese Electric Grid | Chloroform | model/secondary | 2.12e-06 | 2.36e-07 |
| Fuel Oil #6 Prod. | Selenium | secondary | 2.07e-06 | 2.29e-07 |
| Fuel Oil #6 Prod. | Fluorides (F-) | secondary | 2.00e-06 | 2.21e-07 |
| Japanese Electric Grid | Propionaldehyde | model/secondary | 1.96e-06 | 2.18e-07 |
| LPG Production | Copper | secondary | 1.67e-06 | 1.86e-07 |
| Japanese Electric Grid | Beryllium | model/secondary | 1.66e-06 | 1.84e-07 |
| LPG Production | Methyl hydrazine | secondary | 1.65e-06 | 1.83e-07 |
| LPG Production | Silicon | secondary | 1.62e-06 | 1.80e-07 |
| LPG Production | 2-Chloroacetophenone | secondary | 1.55e-06 | 1.72e-07 |
| LPG Production | Dimethylbenzanthracene | secondary | 1.53e-06 | 1.70e-07 |
| LPG Production | Bromomethane | secondary | 1.53e-06 | 1.70e-07 |
| Fuel Oil #2 Prod. | Phosphorus (yellow or white) | secondary | 1.50e-06 | 1.66e-07 |
| Monitor/module | Cadmium | primary | 1.30e-06 | 1.44e-07 |
| LPG Production | Naphthalene | secondary | 1.25e-06 | 1.39e-07 |
| LPG Production | Lead | secondary | 1.19e-06 | 1.32e-07 |
| Japanese Electric Grid | Acrolein | model/secondary | 1.11e-06 | 1.24e-07 |
| Fuel Oil #2 Prod. | Fluorides (F-) | secondary | 1.10e-06 | 1.22e-07 |
| Fuel Oil #2 Prod. | Selenium | secondary | 1.09e-06 | 1.21e-07 |
| Fuel Oil #6 Prod. | Ammonia | secondary | 1.08e-06 | 1.20e-07 |
| LPG Production | Manganese | secondary | 1.07e-06 | 1.19e-07 |
| US electric grid | Chromium (VI) | model/secondary | 1.04e-06 | 1.15e-07 |
| Fuel Oil #4 Prod. | Hydrofluoric acid | secondary | 1.03e-06 | 1.15e-07 |
| LPG Production | Beryllium | secondary | 1.03e-06 | 1.14e-07 |
| US electric grid | Molybdenum | model/secondary | 9.62e-07 | 1.07e-07 |
| Fuel Oil #2 Prod. | Hydrogen sulfide | secondary | 9.44e-07 | 1.05e-07 |
| Fuel Oil #4 Prod. | Molybdenum | secondary | 9.30e-07 | 1.03e-07 |
| Japanese Electric Grid | Methyl chloride | model/secondary | 9.25e-07 | 1.03e-07 |
| Monitor/module | Tin | primary | 9.16e-07 | 1.02e-07 |
| LPG Production | Barium | secondary | 8.94e-07 | 9.92e-08 |
| US electric grid | Methyl hydrazine | model/secondary | 8.93e-07 | 9.90e-08 |
| US electric grid | 2-Chloroacetophenone | model/secondary | 8.36e-07 | 9.28e-08 |
| US electric grid | Bromomethane | model/secondary | 8.27e-07 | 9.17e-08 |
| Fuel Oil #2 Prod. | Ammonia | secondary | 8.14e-07 | 9.03e-08 |
| Japanese Electric Grid | Toluene | model/secondary | 8.04e-07 | 8.92e-08 |
| LPG Production | Cyanide (-1) | secondary | 8.03e-07 | 8.90e-08 |
| Monitor/module | Nickel | primary | 7.74e-07 | 8.59e-08 |
| LPG Production | Barium cmpds | secondary | 7.62e-07 | 8.45e-08 |
| Natural Gas Prod. | Antimony | secondary | 7.03e-07 | 7.79e-08 |
| Fuel Oil #4 Prod. | Ethane | secondary | 6.72e-07 | 7.45e-08 |
| Japanese Electric Grid | Di(2-ethylhexyl)phthalate | model/secondary | 6.66e-07 | 7.39e-08 |
| Fuel Oil #6 Prod. | Hydrofluoric acid | secondary | 5.52e-07 | 6.12e-08 |
| Fuel Oil #6 Prod. | Molybdenum | secondary | 5.31e-07 | 5.89e-08 |
| Japanese Electric Grid | Acetaldehyde | model/secondary | 5.31e-07 | 5.88e-08 |
| Japanese Electric Grid | Hexane | model/secondary | 5.15e-07 | 5.71e-08 |
| Fuel Oil #4 Prod. | Zinc (elemental) | secondary | 5.10e-07 | 5.66e-08 |

## Table M-34. LCD LCIA Results for the Chronic Public Health Effects Impact Category

| Process Group | Material | LCI Data Type | Chronic Public Toxicity (tox-kg) | % of Total |
|---|---|---|---|---|
| Natural Gas Prod. | Dimethylbenzanthracene | secondary | 4.53e-07 | 5.03e-08 |
| US electric grid | Nickel | model/secondary | 4.48e-07 | 4.97e-08 |
| LPG Production | Cadmium | secondary | 4.42e-07 | 4.90e-08 |
| US electric grid | Cyanide (-1) | model/secondary | 4.34e-07 | 4.82e-08 |
| Fuel Oil #4 Prod. | Chromium (VI) | secondary | 4.07e-07 | 4.52e-08 |
| Japanese Electric Grid | Mercury | model/secondary | 3.97e-07 | 4.41e-08 |
| Fuel Oil #4 Prod. | Hexane | secondary | 3.91e-07 | 4.33e-08 |
| Japanese Electric Grid | Dimethyl sulfate | model/secondary | 3.69e-07 | 4.09e-08 |
| LCD glass mfg. | Nitrate | primary | 3.66e-07 | 4.06e-08 |
| US electric grid | 2,3,7,8-TCDD | model/secondary | 3.29e-07 | 3.65e-08 |
| LPG Production | Carbon disulfide | secondary | 3.28e-07 | 3.64e-08 |
| Fuel Oil #6 Prod. | Ethane | secondary | 3.02e-07 | 3.35e-08 |
| Fuel Oil #2 Prod. | Hydrofluoric acid | secondary | 2.94e-07 | 3.26e-08 |
| Fuel Oil #4 Prod. | Pentane | secondary | 2.82e-07 | 3.13e-08 |
| Natural Gas Prod. | Nickel | secondary | 2.75e-07 | 3.05e-08 |
| Fuel Oil #4 Prod. | PM-10 | secondary | 2.68e-07 | 2.97e-08 |
| US electric grid | Naphthalene | model/secondary | 2.65e-07 | 2.94e-08 |
| LPG Production | Benzyl chloride | secondary | 2.51e-07 | 2.79e-08 |
| Fuel Oil #4 Prod. | Phenol | secondary | 2.51e-07 | 2.79e-08 |
| Fuel Oil #2 Prod. | Molybdenum | secondary | 2.49e-07 | 2.76e-08 |
| LPG Production | Cobalt | secondary | 2.41e-07 | 2.67e-08 |
| Fuel Oil #4 Prod. | Nickel | secondary | 2.36e-07 | 2.61e-08 |
| Monitor/module | Manganese | primary | 2.29e-07 | 2.54e-08 |
| US electric grid | Barium | model/secondary | 2.25e-07 | 2.50e-08 |
| Fuel Oil #6 Prod. | Zinc (elemental) | secondary | 2.25e-07 | 2.49e-08 |
| Fuel Oil #6 Prod. | Chromium (VI) | secondary | 2.18e-07 | 2.41e-08 |
| Fuel Oil #2 Prod. | Ethane | secondary | 2.15e-07 | 2.39e-08 |
| Natural Gas Prod. | Hydrogen sulfide | secondary | 2.12e-07 | 2.35e-08 |
| Natural Gas Prod. | Naphthalene | secondary | 2.08e-07 | 2.31e-08 |
| LPG Production | Aluminum (elemental) | secondary | 1.86e-07 | 2.06e-08 |
| Japanese Electric Grid | Isophorone | model/secondary | 1.78e-07 | 1.98e-08 |
| US electric grid | Carbon disulfide | model/secondary | 1.78e-07 | 1.97e-08 |
| LPG Production | Chloroform | secondary | 1.77e-07 | 1.97e-08 |
| Fuel Oil #6 Prod. | Hexane | secondary | 1.76e-07 | 1.95e-08 |
| Fuel Oil #2 Prod. | Zinc (elemental) | secondary | 1.65e-07 | 1.84e-08 |
| LPG Production | Propionaldehyde | secondary | 1.64e-07 | 1.82e-08 |
| Fuel Oil #6 Prod. | PM-10 | secondary | 1.59e-07 | 1.76e-08 |
| Japanese Electric Grid | Methyl ethyl ketone | model/secondary | 1.43e-07 | 1.58e-08 |
| Japanese Electric Grid | Tetrachloroethylene | model/secondary | 1.41e-07 | 1.56e-08 |
| US electric grid | Benzyl chloride | model/secondary | 1.36e-07 | 1.51e-08 |
| Fuel Oil #6 Prod. | Nickel | secondary | 1.36e-07 | 1.51e-08 |
| Fuel Oil #6 Prod. | Pentane | secondary | 1.27e-07 | 1.40e-08 |
| Japanese Electric Grid | 1,2-Dichloroethane | model/secondary | 1.25e-07 | 1.39e-08 |
| Fuel Oil #2 Prod. | Hexane | secondary | 1.25e-07 | 1.39e-08 |
| Japanese Electric Grid | Methyl methacrylate | model/secondary | 1.22e-07 | 1.35e-08 |
| Fuel Oil #2 Prod. | Chromium (VI) | secondary | 1.16e-07 | 1.28e-08 |
| Japanese Electric Grid | Styrene | model/secondary | 1.08e-07 | 1.20e-08 |
| US electric grid | Cadmium | model/secondary | 1.06e-07 | 1.18e-08 |
| Japanese Electric Grid | Bromoform | model/secondary | 1.01e-07 | 1.12e-08 |

## Table M-34. LCD LCIA Results for the Chronic Public Health Effects Impact Category

| Process Group | Material | LCI Data Type | Chronic Public Toxicity (tox-kg) | % of Total |
|---|---|---|---|---|
| Fuel Oil #4 Prod. | Aluminum (+3) | secondary | 9.95e-08 | 1.10e-08 |
| Japanese Electric Grid | Dichloromethane | model/secondary | 9.94e-08 | 1.10e-08 |
| Monitor/module | Mercury | primary | 9.69e-08 | 1.08e-08 |
| US electric grid | Chloroform | model/secondary | 9.59e-08 | 1.06e-08 |
| Natural Gas Prod. | Methyl hydrazine | secondary | 9.41e-08 | 1.04e-08 |
| Fuel Oil #2 Prod. | Phenol | secondary | 9.37e-08 | 1.04e-08 |
| LPG Production | Acrolein | secondary | 9.31e-08 | 1.03e-08 |
| Natural Gas Prod. | Barium | secondary | 9.30e-08 | 1.03e-08 |
| Fuel Oil #4 Prod. | Antimony | secondary | 9.15e-08 | 1.02e-08 |
| Fuel Oil #2 Prod. | Pentane | secondary | 9.02e-08 | 1.00e-08 |
| US electric grid | Propionaldehyde | model/secondary | 8.86e-08 | 9.83e-09 |
| US electric grid | Manganese | model/secondary | 8.83e-08 | 9.79e-09 |
| Natural Gas Prod. | 2-Chloroacetophenone | secondary | 8.81e-08 | 9.77e-09 |
| Natural Gas Prod. | Bromomethane | secondary | 8.71e-08 | 9.66e-09 |
| Natural Gas Prod. | Copper | secondary | 8.32e-08 | 9.23e-09 |
| Fuel Oil #6 Prod. | Phenol | secondary | 8.24e-08 | 9.14e-09 |
| Japanese Electric Grid | Chlorobenzene | model/secondary | 8.05e-08 | 8.93e-09 |
| LPG Production | Methyl chloride | secondary | 7.72e-08 | 8.57e-09 |
| US electric grid | Fluoride | model/secondary | 7.56e-08 | 8.39e-09 |
| Panel components | Methyl ethyl ketone | primary | 6.97e-08 | 7.73e-09 |
| Fuel Oil #2 Prod. | PM-10 | secondary | 6.93e-08 | 7.69e-09 |
| Natural Gas Prod. | Lead | secondary | 6.83e-08 | 7.58e-09 |
| Natural Gas Prod. | Beryllium | secondary | 6.74e-08 | 7.47e-09 |
| Japanese Electric Grid | Cumene hydroperoxide | model/secondary | 6.55e-08 | 7.27e-09 |
| Japanese Electric Grid | 2,4-Dinitrotoluene | model/secondary | 6.44e-08 | 7.14e-09 |
| Fuel Oil #2 Prod. | Nickel | secondary | 6.25e-08 | 6.94e-09 |
| Natural Gas Prod. | Manganese | secondary | 6.23e-08 | 6.91e-09 |
| Japanese Electric Grid | Acetophenone | model/secondary | 5.93e-08 | 6.58e-09 |
| US electric grid | Beryllium | model/secondary | 5.64e-08 | 6.26e-09 |
| LPG Production | Di(2-ethylhexyl)phthalate | secondary | 5.56e-08 | 6.17e-09 |
| US electric grid | Acrolein | model/secondary | 5.04e-08 | 5.59e-09 |
| US electric grid | Lead | model/secondary | 4.94e-08 | 5.48e-09 |
| Natural Gas Prod. | Nitrate | secondary | 4.74e-08 | 5.26e-09 |
| US electric grid | Cobalt | model/secondary | 4.71e-08 | 5.22e-09 |
| Natural Gas Prod. | Cyanide (-1) | secondary | 4.57e-08 | 5.07e-09 |
| Monitor/module | Phenol | primary | 4.54e-08 | 5.04e-09 |
| Fuel Oil #4 Prod. | Nitrate | secondary | 4.52e-08 | 5.02e-09 |
| LPG Production | Acetaldehyde | secondary | 4.43e-08 | 4.91e-09 |
| US electric grid | Copper | model/secondary | 4.33e-08 | 4.80e-09 |
| US electric grid | Methyl chloride | model/secondary | 4.18e-08 | 4.63e-09 |
| LPG Production | Mercury | secondary | 4.17e-08 | 4.62e-09 |
| Fuel Oil #6 Prod. | Antimony | secondary | 4.05e-08 | 4.49e-09 |
| Fuel Oil #2 Prod. | Aluminum (+3) | secondary | 3.71e-08 | 4.11e-09 |
| Japanese Electric Grid | Ethylbenzene | model/secondary | 3.49e-08 | 3.88e-09 |
| LPG Production | Cadmium cmpds | secondary | 3.33e-08 | 3.70e-09 |
| Fuel Oil #6 Prod. | Aluminum (+3) | secondary | 3.26e-08 | 3.62e-09 |
| LPG Production | Dimethyl sulfate | secondary | 3.08e-08 | 3.42e-09 |
| US electric grid | Di(2-ethylhexyl)phthalate | model/secondary | 3.01e-08 | 3.34e-09 |
| LPG Production | Toluene | secondary | 2.99e-08 | 3.32e-09 |
| Fuel Oil #2 Prod. | Antimony | secondary | 2.96e-08 | 3.28e-09 |
| Natural Gas Prod. | Cadmium | secondary | 2.52e-08 | 2.79e-09 |

## Table M-34. LCD LCIA Results for the Chronic Public Health Effects Impact Category

| Process Group | Material | LCI Data Type | Chronic Public Toxicity (tox-kg) | % of Total |
|---|---|---|---|---|
| US electric grid | Acetaldehyde | model/secondary | 2.40e-08 | 2.66e-09 |
| US electric grid | Hexane | model/secondary | 2.33e-08 | 2.58e-09 |
| Natural Gas Prod. | Phenol | secondary | 2.30e-08 | 2.55e-09 |
| LCD glass mfg. | Chromium | primary | 2.04e-08 | 2.26e-09 |
| Fuel Oil #4 Prod. | Silicon | secondary | 2.02e-08 | 2.24e-09 |
| Monitor/module | Tetrachloroethylene | primary | 1.95e-08 | 2.17e-09 |
| Japanese Electric Grid | Acenaphthene | model/secondary | 1.95e-08 | 2.16e-09 |
| Fuel Oil #4 Prod. | Copper | secondary | 1.92e-08 | 2.13e-09 |
| Natural Gas Prod. | Carbon disulfide | secondary | 1.87e-08 | 2.08e-09 |
| Fuel Oil #4 Prod. | Methyl hydrazine | secondary | 1.77e-08 | 1.97e-09 |
| Japanese Electric Grid | Phenanthrene | model/secondary | 1.75e-08 | 1.94e-09 |
| LPG Production | 1,4-Dichlorobenzene | secondary | 1.74e-08 | 1.93e-09 |
| US electric grid | Dimethyl sulfate | model/secondary | 1.67e-08 | 1.85e-09 |
| Fuel Oil #4 Prod. | 2-Chloroacetophenone | secondary | 1.66e-08 | 1.84e-09 |
| Fuel Oil #6 Prod. | Nitrate | secondary | 1.65e-08 | 1.83e-09 |
| Fuel Oil #4 Prod. | Bromomethane | secondary | 1.64e-08 | 1.82e-09 |
| Fuel Oil #2 Prod. | Nitrate | secondary | 1.61e-08 | 1.79e-09 |
| Japanese Electric Grid | Methyl tert-butyl ether | model/secondary | 1.60e-08 | 1.77e-09 |
| Natural Gas Prod. | PM-10 | secondary | 1.56e-08 | 1.73e-09 |
| Japanese Electric Grid | Chromium (III) | model/secondary | 1.51e-08 | 1.67e-09 |
| LPG Production | Isophorone | secondary | 1.49e-08 | 1.65e-09 |
| US electric grid | Mercury | model/secondary | 1.45e-08 | 1.61e-09 |
| Natural Gas Prod. | Benzyl chloride | secondary | 1.43e-08 | 1.59e-09 |
| Fuel Oil #4 Prod. | Dimethylbenzanthracene | secondary | 1.38e-08 | 1.53e-09 |
| Natural Gas Prod. | Toluene | secondary | 1.36e-08 | 1.51e-09 |
| LPG Production | Aromatic hydrocarbons | secondary | 1.34e-08 | 1.49e-09 |
| LCD glass mfg. | Nickel | primary | 1.28e-08 | 1.42e-09 |
| Fuel Oil #4 Prod. | Lead | secondary | 1.28e-08 | 1.41e-09 |
| Japanese Electric Grid | 1,1,1-Trichloroethane | model/secondary | 1.23e-08 | 1.36e-09 |
| Japanese Electric Grid | Phenol | model/secondary | 1.22e-08 | 1.35e-09 |
| Fuel Oil #6 Prod. | Silicon | secondary | 1.19e-08 | 1.32e-09 |
| LPG Production | Methyl ethyl ketone | secondary | 1.19e-08 | 1.32e-09 |
| LPG Production | Tetrachloroethylene | secondary | 1.18e-08 | 1.31e-09 |
| Fuel Oil #4 Prod. | Naphthalene | secondary | 1.16e-08 | 1.29e-09 |
| Monitor/module | Trichloroethylene | primary | 1.16e-08 | 1.29e-09 |
| Fuel Oil #4 Prod. | Manganese | secondary | 1.15e-08 | 1.27e-09 |
| Japanese Electric Grid | Vinyl acetate | model/secondary | 1.14e-08 | 1.26e-09 |
| Fuel Oil #4 Prod. | Beryllium | secondary | 1.10e-08 | 1.22e-09 |
| Fuel Oil #6 Prod. | Copper | secondary | 1.08e-08 | 1.20e-09 |
| Japanese Electric Grid | Ethylene dibromide | model/secondary | 1.06e-08 | 1.17e-09 |
| LPG Production | 1,2-Dichloroethane | secondary | 1.05e-08 | 1.16e-09 |
| LPG Production | Methyl methacrylate | secondary | 1.02e-08 | 1.13e-09 |
| Natural Gas Prod. | Chloroform | secondary | 1.01e-08 | 1.12e-09 |
| Japanese Electric Grid | Xylene (mixed isomers) | model/secondary | 9.46e-09 | 1.05e-09 |
| Fuel Oil #6 Prod. | Methyl hydrazine | secondary | 9.45e-09 | 1.05e-09 |
| Natural Gas Prod. | Propionaldehyde | secondary | 9.34e-09 | 1.04e-09 |
| Natural Gas Prod. | Aluminum (+3) | secondary | 9.03e-09 | 1.00e-09 |
| LPG Production | Styrene | secondary | 9.00e-09 | 9.99e-10 |
| Fuel Oil #6 Prod. | 2-Chloroacetophenone | secondary | 8.85e-09 | 9.82e-10 |

## Table M-34. LCD LCIA Results for the Chronic Public Health Effects Impact Category

| Process Group | Material | LCI Data Type | Chronic Public Toxicity (tox-kg) | % of Total |
|---|---|---|---|---|
| Fuel Oil #6 Prod. | Bromomethane | secondary | 8.75e-09 | 9.71e-10 |
| Fuel Oil #4 Prod. | Cyanide (-1) | secondary | 8.62e-09 | 9.56e-10 |
| LPG Production | Bromoform | secondary | 8.41e-09 | 9.33e-10 |
| Natural Gas Prod. | Cobalt | secondary | 8.33e-09 | 9.24e-10 |
| LPG Production | Dichloromethane | secondary | 8.30e-09 | 9.20e-10 |
| LPG Production | Chromium (III) | secondary | 8.24e-09 | 9.14e-10 |
| US electric grid | Toluene | model/secondary | 8.23e-09 | 9.12e-10 |
| US electric grid | Isophorone | model/secondary | 8.06e-09 | 8.94e-10 |
| Fuel Oil #4 Prod. | Barium | secondary | 7.83e-09 | 8.69e-10 |
| Natural Gas Prod. | o-xylene | secondary | 7.25e-09 | 8.04e-10 |
| Fuel Oil #6 Prod. | Lead | secondary | 6.80e-09 | 7.55e-10 |
| LPG Production | Chlorobenzene | secondary | 6.72e-09 | 7.46e-10 |
| US electric grid | Methyl ethyl ketone | model/secondary | 6.45e-09 | 7.15e-10 |
| US electric grid | Tetrachloroethylene | model/secondary | 6.37e-09 | 7.07e-10 |
| LPG Production | Copper (+1 & +2) | secondary | 6.29e-09 | 6.97e-10 |
| Japanese Electric Grid | Dibenzo[a,h]anthracene | model/secondary | 6.24e-09 | 6.92e-10 |
| Fuel Oil #6 Prod. | Dimethylbenzanthracene | secondary | 6.21e-09 | 6.89e-10 |
| Fuel Oil #6 Prod. | Manganese | secondary | 6.09e-09 | 6.76e-10 |
| Fuel Oil #6 Prod. | Beryllium | secondary | 5.82e-09 | 6.46e-10 |
| US electric grid | 1,2-Dichloroethane | model/secondary | 5.67e-09 | 6.29e-10 |
| Fuel Oil #4 Prod. | Barium cmpds | secondary | 5.58e-09 | 6.19e-10 |
| US electric grid | Methyl methacrylate | model/secondary | 5.51e-09 | 6.11e-10 |
| LPG Production | 2,4-Dinitrotoluene | secondary | 5.39e-09 | 5.98e-10 |
| Fuel Oil #6 Prod. | Naphthalene | secondary | 5.39e-09 | 5.98e-10 |
| Natural Gas Prod. | Acrolein | secondary | 5.31e-09 | 5.89e-10 |
| Fuel Oil #2 Prod. | Copper | secondary | 5.22e-09 | 5.79e-10 |
| Fuel Oil #2 Prod. | Silicon | secondary | 5.21e-09 | 5.78e-10 |
| Natural Gas Prod. | 1,4-Dichlorobenzene | secondary | 5.15e-09 | 5.71e-10 |
| Fuel Oil #2 Prod. | Methyl hydrazine | secondary | 5.04e-09 | 5.59e-10 |
| Japanese Electric Grid | 2,3,7,8-TCDF | model/secondary | 5.01e-09 | 5.56e-10 |
| LPG Production | Acetophenone | secondary | 4.95e-09 | 5.49e-10 |
| US electric grid | Styrene | model/secondary | 4.87e-09 | 5.40e-10 |
| Fuel Oil #2 Prod. | 2-Chloroacetophenone | secondary | 4.72e-09 | 5.23e-10 |
| Fuel Oil #4 Prod. | Cadmium | secondary | 4.68e-09 | 5.19e-10 |
| Fuel Oil #2 Prod. | Bromomethane | secondary | 4.66e-09 | 5.17e-10 |
| Fuel Oil #6 Prod. | Cyanide (-1) | secondary | 4.60e-09 | 5.10e-10 |
| US electric grid | Bromoform | model/secondary | 4.55e-09 | 5.04e-10 |
| US electric grid | Dichloromethane | model/secondary | 4.49e-09 | 4.98e-10 |
| Fuel Oil #2 Prod. | Dimethylbenzanthracene | secondary | 4.43e-09 | 4.91e-10 |
| Natural Gas Prod. | Methyl chloride | secondary | 4.40e-09 | 4.88e-10 |
| Japanese Electric Grid | o-xylene | model/secondary | 4.31e-09 | 4.79e-10 |
| Japanese Electric Grid | Benzo[a]anthracene | model/secondary | 4.11e-09 | 4.56e-10 |
| Fuel Oil #2 Prod. | Naphthalene | secondary | 3.65e-09 | 4.05e-10 |
| US electric grid | Chlorobenzene | model/secondary | 3.64e-09 | 4.03e-10 |
| Fuel Oil #2 Prod. | Lead | secondary | 3.62e-09 | 4.02e-10 |
| Fuel Oil #4 Prod. | Carbon disulfide | secondary | 3.53e-09 | 3.91e-10 |
| Fuel Oil #6 Prod. | Barium | secondary | 3.39e-09 | 3.76e-10 |
| LPG Production | o-xylene | secondary | 3.29e-09 | 3.65e-10 |
| Fuel Oil #2 Prod. | Manganese | secondary | 3.26e-09 | 3.62e-10 |
| Natural Gas Prod. | Di(2-ethylhexyl)phthalate | secondary | 3.17e-09 | 3.52e-10 |
| Fuel Oil #2 Prod. | Beryllium | secondary | 3.13e-09 | 3.48e-10 |

## Table M-34. LCD LCIA Results for the Chronic Public Health Effects Impact Category

| Process Group | Material | LCI Data Type | Chronic Public Toxicity (tox-kg) | % of Total |
|---|---|---|---|---|
| Japanese Electric Grid | Ethyl Chloride | model/secondary | 3.08e-09 | 3.42e-10 |
| Natural Gas Prod. | Mercury | secondary | 2.97e-09 | 3.29e-10 |
| US electric grid | 2,4-Dinitrotoluene | model/secondary | 2.92e-09 | 3.23e-10 |
| Fuel Oil #4 Prod. | Benzyl chloride | secondary | 2.70e-09 | 3.00e-10 |
| US electric grid | Acetophenone | model/secondary | 2.68e-09 | 2.97e-10 |
| LPG Production | Ethylbenzene | secondary | 2.67e-09 | 2.96e-10 |
| Fuel Oil #4 Prod. | Cobalt | secondary | 2.66e-09 | 2.95e-10 |
| Japanese Electric Grid | Benzo[b,j,k]fluoranthene | model/secondary | 2.61e-09 | 2.90e-10 |
| Fuel Oil #2 Prod. | Barium | secondary | 2.56e-09 | 2.84e-10 |
| Natural Gas Prod. | Acetaldehyde | secondary | 2.52e-09 | 2.80e-10 |
| Fuel Oil #6 Prod. | Cadmium | secondary | 2.46e-09 | 2.73e-10 |
| Fuel Oil #2 Prod. | Cyanide (-1) | secondary | 2.45e-09 | 2.72e-10 |
| Fuel Oil #4 Prod. | Aluminum (elemental) | secondary | 2.31e-09 | 2.56e-10 |
| Japanese Electric Grid | Indeno(1,2,3-cd)pyrene | model/secondary | 2.30e-09 | 2.55e-10 |
| Fuel Oil #2 Prod. | Barium cmpds | secondary | 2.08e-09 | 2.31e-10 |
| Fuel Oil #4 Prod. | Chloroform | secondary | 1.91e-09 | 2.11e-10 |
| Fuel Oil #6 Prod. | Carbon disulfide | secondary | 1.88e-09 | 2.09e-10 |
| Fuel Oil #6 Prod. | Barium cmpds | secondary | 1.83e-09 | 2.03e-10 |
| Japanese Electric Grid | Chrysene | model/secondary | 1.81e-09 | 2.01e-10 |
| Fuel Oil #4 Prod. | Propionaldehyde | secondary | 1.76e-09 | 1.95e-10 |
| Natural Gas Prod. | Dimethyl sulfate | secondary | 1.76e-09 | 1.95e-10 |
| Natural Gas Prod. | Zinc (+2) | secondary | 1.65e-09 | 1.83e-10 |
| Japanese Electric Grid | 2-Methylnaphthalene | model/secondary | 1.60e-09 | 1.77e-10 |
| Japanese Electric Grid | Biphenyl | model/secondary | 1.56e-09 | 1.72e-10 |
| Japanese Electric Grid | Anthracene | model/secondary | 1.55e-09 | 1.72e-10 |
| Natural Gas Prod. | Chlorine | secondary | 1.49e-09 | 1.65e-10 |
| Fuel Oil #6 Prod. | Cobalt | secondary | 1.45e-09 | 1.60e-10 |
| Japanese Electric Grid | Benzo[g,h,i]perylene | model/secondary | 1.45e-09 | 1.60e-10 |
| Fuel Oil #6 Prod. | Benzyl chloride | secondary | 1.44e-09 | 1.60e-10 |
| US electric grid | Ethylbenzene | model/secondary | 1.43e-09 | 1.59e-10 |
| Fuel Oil #6 Prod. | Aluminum (elemental) | secondary | 1.37e-09 | 1.51e-10 |
| Fuel Oil #2 Prod. | Cadmium | secondary | 1.34e-09 | 1.49e-10 |
| LPG Production | Methyl tert-butyl ether | secondary | 1.34e-09 | 1.48e-10 |
| Monitor/module | 1,1,1-Trichloroethane | primary | 1.30e-09 | 1.44e-10 |
| Natural Gas Prod. | Silicon | secondary | 1.17e-09 | 1.30e-10 |
| LPG Production | Zinc (+2) | secondary | 1.13e-09 | 1.25e-10 |
| Japanese Electric Grid | Acenaphthylene | model/secondary | 1.11e-09 | 1.23e-10 |
| LPG Production | Phenanthrene | secondary | 1.09e-09 | 1.21e-10 |
| Fuel Oil #6 Prod. | Chloroform | secondary | 1.02e-09 | 1.13e-10 |
| Fuel Oil #2 Prod. | Carbon disulfide | secondary | 1.00e-09 | 1.11e-10 |
| Fuel Oil #4 Prod. | Acrolein | secondary | 1.00e-09 | 1.11e-10 |
| LPG Production | Vinyl acetate | secondary | 9.52e-10 | 1.06e-10 |
| Fuel Oil #6 Prod. | Propionaldehyde | secondary | 9.38e-10 | 1.04e-10 |
| LPG Production | 3-Methylcholanthrene | secondary | 9.21e-10 | 1.02e-10 |
| Japanese Electric Grid | Benzo[a]pyrene | model/secondary | 9.17e-10 | 1.02e-10 |
| LPG Production | Ethylene dibromide | secondary | 8.83e-10 | 9.79e-11 |
| Natural Gas Prod. | Isophorone | secondary | 8.49e-10 | 9.42e-11 |
| Fuel Oil #4 Prod. | Methyl chloride | secondary | 8.30e-10 | 9.20e-11 |
| Fuel Oil #2 Prod. | Benzyl chloride | secondary | 7.67e-10 | 8.51e-11 |

## Table M-34. LCD LCIA Results for the Chronic Public Health Effects Impact Category

| Process Group | Material | LCI Data Type | Chronic Public Toxicity (tox-kg) | % of Total |
|---|---|---|---|---|
| Fuel Oil #2 Prod. | Cobalt | secondary | 7.42e-10 | 8.23e-11 |
| US electric grid | Methyl tert-butyl ether | model/secondary | 7.23e-10 | 8.02e-11 |
| Natural Gas Prod. | Methyl ethyl ketone | secondary | 6.79e-10 | 7.54e-11 |
| Japanese Electric Grid | Pyrene | model/secondary | 6.73e-10 | 7.46e-11 |
| Natural Gas Prod. | Tetrachloroethylene | secondary | 6.71e-10 | 7.45e-11 |
| Fuel Oil #4 Prod. | Di(2-ethylhexyl)phthalate | secondary | 5.98e-10 | 6.63e-11 |
| Natural Gas Prod. | 1,2-Dichloroethane | secondary | 5.97e-10 | 6.62e-11 |
| Fuel Oil #2 Prod. | Aluminum (elemental) | secondary | 5.96e-10 | 6.61e-11 |
| Japanese Electric Grid | Fluorene | model/secondary | 5.86e-10 | 6.50e-11 |
| Natural Gas Prod. | Methyl methacrylate | secondary | 5.81e-10 | 6.44e-11 |
| LPG Production | 2-Methylnaphthalene | secondary | 5.76e-10 | 6.39e-11 |
| Japanese Electric Grid | Fluoranthene | model/secondary | 5.59e-10 | 6.21e-11 |
| US electric grid | Phenol | model/secondary | 5.51e-10 | 6.11e-11 |
| Fuel Oil #2 Prod. | Chloroform | secondary | 5.41e-10 | 6.00e-11 |
| Fuel Oil #6 Prod. | Acrolein | secondary | 5.33e-10 | 5.91e-11 |
| US electric grid | Vinyl acetate | model/secondary | 5.15e-10 | 5.71e-11 |
| Natural Gas Prod. | Styrene | secondary | 5.13e-10 | 5.69e-11 |
| LPG Production | Chlorine | secondary | 5.11e-10 | 5.66e-11 |
| Natural Gas Prod. | Barium cmpds | secondary | 5.06e-10 | 5.61e-11 |
| Fuel Oil #2 Prod. | Propionaldehyde | secondary | 5.00e-10 | 5.55e-11 |
| US electric grid | Phenanthrene | model/secondary | 4.85e-10 | 5.38e-11 |
| Natural Gas Prod. | Bromoform | secondary | 4.79e-10 | 5.31e-11 |
| US electric grid | Ethylene dibromide | model/secondary | 4.78e-10 | 5.30e-11 |
| Fuel Oil #4 Prod. | Acetaldehyde | secondary | 4.76e-10 | 5.28e-11 |
| Natural Gas Prod. | Dichloromethane | secondary | 4.73e-10 | 5.24e-11 |
| Fuel Oil #4 Prod. | Mercury | secondary | 4.46e-10 | 4.94e-11 |
| Fuel Oil #6 Prod. | Methyl chloride | secondary | 4.42e-10 | 4.91e-11 |
| US electric grid | Xylene (mixed isomers) | model/secondary | 4.27e-10 | 4.74e-11 |
| Natural Gas Prod. | Chlorobenzene | secondary | 3.83e-10 | 4.25e-11 |
| US electric grid | Chromium (III) | model/secondary | 3.82e-10 | 4.23e-11 |
| LPG Production | 1,1,1-Trichloroethane | secondary | 3.63e-10 | 4.03e-11 |
| LPG Production | Acenaphthene | secondary | 3.37e-10 | 3.74e-11 |
| Fuel Oil #4 Prod. | Dimethyl sulfate | secondary | 3.31e-10 | 3.67e-11 |
| Fuel Oil #6 Prod. | Di(2-ethylhexyl)phthalate | secondary | 3.19e-10 | 3.53e-11 |
| Natural Gas Prod. | 2,4-Dinitrotoluene | secondary | 3.07e-10 | 3.41e-11 |
| Fuel Oil #4 Prod. | Toluene | secondary | 2.92e-10 | 3.24e-11 |
| Fuel Oil #2 Prod. | Acrolein | secondary | 2.84e-10 | 3.15e-11 |
| Natural Gas Prod. | Acetophenone | secondary | 2.82e-10 | 3.13e-11 |
| Natural Gas Prod. | 3-Methylcholanthrene | secondary | 2.72e-10 | 3.02e-11 |
| LPG Production | Ethyl Chloride | secondary | 2.57e-10 | 2.85e-11 |
| Natural Gas Prod. | Chromium (III) | secondary | 2.54e-10 | 2.82e-11 |
| Fuel Oil #6 Prod. | Acetaldehyde | secondary | 2.54e-10 | 2.81e-11 |
| Fuel Oil #4 Prod. | Cadmium cmpds | secondary | 2.44e-10 | 2.71e-11 |
| Fuel Oil #6 Prod. | Mercury | secondary | 2.36e-10 | 2.62e-11 |
| Fuel Oil #2 Prod. | Methyl chloride | secondary | 2.36e-10 | 2.61e-11 |
| US electric grid | 2,3,7,8-TCDF | model/secondary | 2.26e-10 | 2.50e-11 |
| LPG Production | Cumene | secondary | 2.18e-10 | 2.41e-11 |
| US electric grid | 1,1,1-Trichloroethane | model/secondary | 2.10e-10 | 2.33e-11 |
| LPG Production | Benzo[a]pyrene | secondary | 2.06e-10 | 2.28e-11 |
| Fuel Oil #6 Prod. | Dimethyl sulfate | secondary | 1.76e-10 | 1.96e-11 |
| Natural Gas Prod. | 2-Methylnaphthalene | secondary | 1.71e-10 | 1.89e-11 |

## Table M-34. LCD LCIA Results for the Chronic Public Health Effects Impact Category

| Process Group | Material | LCI Data Type | Chronic Public Toxicity (tox-kg) | % of Total |
|---|---|---|---|---|
| Fuel Oil #2 Prod. | Di(2-ethylhexyl)phthalate | secondary | 1.70e-10 | 1.88e-11 |
| Japanese Electric Grid | 5-Methyl chrysene | model/secondary | 1.69e-10 | 1.88e-11 |
| Fuel Oil #4 Prod. | Isophorone | secondary | 1.60e-10 | 1.78e-11 |
| Fuel Oil #4 Prod. | 1,4-Dichlorobenzene | secondary | 1.57e-10 | 1.74e-11 |
| Natural Gas Prod. | Ethylbenzene | secondary | 1.52e-10 | 1.69e-11 |
| US electric grid | Acenaphthene | model/secondary | 1.47e-10 | 1.63e-11 |
| Fuel Oil #6 Prod. | Toluene | secondary | 1.43e-10 | 1.58e-11 |
| US electric grid | Ethyl Chloride | model/secondary | 1.39e-10 | 1.54e-11 |
| Fuel Oil #2 Prod. | Acetaldehyde | secondary | 1.35e-10 | 1.50e-11 |
| Natural Gas Prod. | Aluminum (elemental) | secondary | 1.34e-10 | 1.49e-11 |
| LPG Production | Biphenyl | secondary | 1.30e-10 | 1.44e-11 |
| Fuel Oil #4 Prod. | Methyl ethyl ketone | secondary | 1.28e-10 | 1.42e-11 |
| Fuel Oil #2 Prod. | Mercury | secondary | 1.27e-10 | 1.41e-11 |
| Fuel Oil #4 Prod. | Tetrachloroethylene | secondary | 1.27e-10 | 1.40e-11 |
| US electric grid | Cumene | model/secondary | 1.18e-10 | 1.31e-11 |
| Fuel Oil #4 Prod. | 1,2-Dichloroethane | secondary | 1.13e-10 | 1.25e-11 |
| LPG Production | Lead cmpds | secondary | 1.12e-10 | 1.24e-11 |
| Natural Gas Prod. | Phenanthrene | secondary | 1.11e-10 | 1.23e-11 |
| Fuel Oil #4 Prod. | Methyl methacrylate | secondary | 1.09e-10 | 1.21e-11 |
| LPG Production | Dibenzo[a,h]anthracene | secondary | 1.07e-10 | 1.18e-11 |
| LPG Production | Acenaphthylene | secondary | 1.03e-10 | 1.14e-11 |
| LPG Production | Anthracene | secondary | 1.01e-10 | 1.12e-11 |
| Fuel Oil #4 Prod. | Aromatic hydrocarbons | secondary | 9.84e-11 | 1.09e-11 |
| Fuel Oil #4 Prod. | Styrene | secondary | 9.67e-11 | 1.07e-11 |
| LPG Production | Nickel cmpds | secondary | 9.46e-11 | 1.05e-11 |
| Fuel Oil #2 Prod. | Dimethyl sulfate | secondary | 9.40e-11 | 1.04e-11 |
| LPG Production | Benzo[a]anthracene | secondary | 9.15e-11 | 1.01e-11 |
| Fuel Oil #2 Prod. | Cadmium cmpds | secondary | 9.10e-11 | 1.01e-11 |
| Fuel Oil #4 Prod. | Bromoform | secondary | 9.03e-11 | 1.00e-11 |
| Fuel Oil #4 Prod. | Dichloromethane | secondary | 8.91e-11 | 9.89e-12 |
| Fuel Oil #2 Prod. | Toluene | secondary | 8.85e-11 | 9.82e-12 |
| Fuel Oil #6 Prod. | Isophorone | secondary | 8.53e-11 | 9.46e-12 |
| Fuel Oil #6 Prod. | Cadmium cmpds | secondary | 8.00e-11 | 8.87e-12 |
| Natural Gas Prod. | Methyl tert-butyl ether | secondary | 7.62e-11 | 8.45e-12 |
| Fuel Oil #4 Prod. | Chlorobenzene | secondary | 7.22e-11 | 8.01e-12 |
| LPG Production | Benzo[b,j,k]fluoranthene | secondary | 7.06e-11 | 7.83e-12 |
| Fuel Oil #6 Prod. | 1,4-Dichlorobenzene | secondary | 7.05e-11 | 7.82e-12 |
| US electric grid | Biphenyl | model/secondary | 7.03e-11 | 7.79e-12 |
| Fuel Oil #6 Prod. | Methyl ethyl ketone | secondary | 6.82e-11 | 7.57e-12 |
| LPG Production | Indeno(1,2,3-cd)pyrene | secondary | 6.80e-11 | 7.55e-12 |
| Fuel Oil #6 Prod. | Tetrachloroethylene | secondary | 6.75e-11 | 7.48e-12 |
| Fuel Oil #6 Prod. | 1,2-Dichloroethane | secondary | 6.00e-11 | 6.65e-12 |
| Fuel Oil #6 Prod. | Methyl methacrylate | secondary | 5.83e-11 | 6.47e-12 |
| Fuel Oil #4 Prod. | 2,4-Dinitrotoluene | secondary | 5.79e-11 | 6.42e-12 |
| LPG Production | Chrysene | secondary | 5.78e-11 | 6.41e-12 |
| Natural Gas Prod. | Vinyl acetate | secondary | 5.43e-11 | 6.02e-12 |
| Fuel Oil #4 Prod. | Acetophenone | secondary | 5.32e-11 | 5.90e-12 |
| Fuel Oil #6 Prod. | Styrene | secondary | 5.15e-11 | 5.72e-12 |
| Natural Gas Prod. | Ethylene dibromide | secondary | 5.03e-11 | 5.58e-12 |

## Table M-34. LCD LCIA Results for the Chronic Public Health Effects Impact Category

| Process Group | Material | LCI Data Type | Chronic Public Toxicity (tox-kg) | % of Total |
|---|---|---|---|---|
| Fuel Oil #2 Prod. | 1,4-Dichlorobenzene | secondary | 5.02e-11 | 5.57e-12 |
| LPG Production | HALON-1301 | secondary | 4.87e-11 | 5.40e-12 |
| Fuel Oil #6 Prod. | Bromoform | secondary | 4.81e-11 | 5.34e-12 |
| Fuel Oil #6 Prod. | Dichloromethane | secondary | 4.75e-11 | 5.27e-12 |
| Fuel Oil #4 Prod. | Copper (+1 & +2) | secondary | 4.60e-11 | 5.11e-12 |
| Fuel Oil #2 Prod. | Isophorone | secondary | 4.55e-11 | 5.04e-12 |
| Fuel Oil #4 Prod. | Chromium (III) | secondary | 4.44e-11 | 4.92e-12 |
| US electric grid | Acenaphthylene | model/secondary | 4.37e-11 | 4.84e-12 |
| US electric grid | Benzo[a]pyrene | model/secondary | 4.14e-11 | 4.59e-12 |
| US electric grid | Benzo[b,j,k]fluoranthene | model/secondary | 4.12e-11 | 4.57e-12 |
| Fuel Oil #6 Prod. | Chlorobenzene | secondary | 3.85e-11 | 4.27e-12 |
| US electric grid | Anthracene | model/secondary | 3.82e-11 | 4.23e-12 |
| Fuel Oil #2 Prod. | Aromatic hydrocarbons | secondary | 3.67e-11 | 4.07e-12 |
| LPG Production | Benzo[b]fluoranthene | secondary | 3.66e-11 | 4.05e-12 |
| Fuel Oil #2 Prod. | Methyl ethyl ketone | secondary | 3.64e-11 | 4.03e-12 |
| Fuel Oil #2 Prod. | Tetrachloroethylene | secondary | 3.59e-11 | 3.99e-12 |
| LPG Production | Mercury compounds | secondary | 3.40e-11 | 3.77e-12 |
| Fuel Oil #6 Prod. | Aromatic hydrocarbons | secondary | 3.23e-11 | 3.58e-12 |
| Fuel Oil #2 Prod. | 1,2-Dichloroethane | secondary | 3.20e-11 | 3.55e-12 |
| LPG Production | Fluorene | secondary | 3.17e-11 | 3.51e-12 |
| Natural Gas Prod. | Benzo[a]pyrene | secondary | 3.11e-11 | 3.45e-12 |
| Fuel Oil #2 Prod. | Methyl methacrylate | secondary | 3.11e-11 | 3.45e-12 |
| Fuel Oil #4 Prod. | o-xylene | secondary | 3.10e-11 | 3.44e-12 |
| Fuel Oil #6 Prod. | 2,4-Dinitrotoluene | secondary | 3.09e-11 | 3.42e-12 |
| Fuel Oil #4 Prod. | Ethylbenzene | secondary | 2.86e-11 | 3.17e-12 |
| Fuel Oil #6 Prod. | Acetophenone | secondary | 2.83e-11 | 3.14e-12 |
| Natural Gas Prod. | Dibenzo[a,h]anthracene | secondary | 2.80e-11 | 3.11e-12 |
| Natural Gas Prod. | Acenaphthene | secondary | 2.80e-11 | 3.10e-12 |
| Fuel Oil #2 Prod. | Styrene | secondary | 2.75e-11 | 3.05e-12 |
| US electric grid | Benzo[a]anthracene | model/secondary | 2.74e-11 | 3.04e-12 |
| LPG Production | Pyrene | secondary | 2.74e-11 | 3.04e-12 |
| LPG Production | Benzo[g,h,i]perylene | secondary | 2.66e-11 | 2.95e-12 |
| LPG Production | Fluoranthene | secondary | 2.59e-11 | 2.87e-12 |
| Fuel Oil #2 Prod. | Bromoform | secondary | 2.57e-11 | 2.85e-12 |
| Fuel Oil #2 Prod. | Dichloromethane | secondary | 2.53e-11 | 2.81e-12 |
| Fuel Oil #6 Prod. | Chromium (III) | secondary | 2.37e-11 | 2.63e-12 |
| Natural Gas Prod. | Cadmium cmpds | secondary | 2.21e-11 | 2.46e-12 |
| Natural Gas Prod. | 1,1,1-Trichloroethane | secondary | 2.07e-11 | 2.30e-12 |
| Fuel Oil #2 Prod. | Chlorobenzene | secondary | 2.05e-11 | 2.28e-12 |
| US electric grid | Chrysene | model/secondary | 1.99e-11 | 2.21e-12 |
| US electric grid | Indeno(1,2,3-cd)pyrene | model/secondary | 1.95e-11 | 2.16e-12 |
| Fuel Oil #2 Prod. | Copper (+1 & +2) | secondary | 1.72e-11 | 1.90e-12 |
| Fuel Oil #2 Prod. | 2,4-Dinitrotoluene | secondary | 1.65e-11 | 1.82e-12 |
| US electric grid | Fluorene | model/secondary | 1.55e-11 | 1.72e-12 |
| Fuel Oil #6 Prod. | Ethylbenzene | secondary | 1.52e-11 | 1.69e-12 |
| Fuel Oil #2 Prod. | Acetophenone | secondary | 1.51e-11 | 1.68e-12 |
| Fuel Oil #6 Prod. | Copper (+1 & +2) | secondary | 1.51e-11 | 1.67e-12 |
| Natural Gas Prod. | Ethyl Chloride | secondary | 1.47e-11 | 1.63e-12 |
| Fuel Oil #6 Prod. | o-xylene | secondary | 1.46e-11 | 1.62e-12 |
| Fuel Oil #4 Prod. | Methyl tert-butyl ether | secondary | 1.44e-11 | 1.59e-12 |
| LPG Production | 5-Methyl chrysene | secondary | 1.41e-11 | 1.57e-12 |

## Table M-34. LCD LCIA Results for the Chronic Public Health Effects Impact Category

| Process Group | Material | LCI Data Type | Chronic Public Toxicity (tox-kg) | % of Total |
|---|---|---|---|---|
| Natural Gas Prod. | Benzo[a]anthracene | secondary | 1.35e-11 | 1.50e-12 |
| Natural Gas Prod. | Anthracene | secondary | 1.28e-11 | 1.42e-12 |
| Fuel Oil #2 Prod. | Chromium (III) | secondary | 1.26e-11 | 1.40e-12 |
| Natural Gas Prod. | Cumene | secondary | 1.24e-11 | 1.38e-12 |
| US electric grid | Fluoranthene | model/secondary | 1.24e-11 | 1.37e-12 |
| Natural Gas Prod. | Indeno(1,2,3-cd)pyrene | secondary | 1.19e-11 | 1.32e-12 |
| Fuel Oil #4 Prod. | Phenanthrene | secondary | 1.13e-11 | 1.25e-12 |
| LPG Production | Halogenated matter (organic) | secondary | 1.12e-11 | 1.24e-12 |
| Natural Gas Prod. | Acenaphthylene | secondary | 1.10e-11 | 1.22e-12 |
| US electric grid | Dibenzo[a,h]anthracene | model/secondary | 1.06e-11 | 1.18e-12 |
| US electric grid | 2-Methylnaphthalene | model/secondary | 1.03e-11 | 1.15e-12 |
| Fuel Oil #4 Prod. | Vinyl acetate | secondary | 1.02e-11 | 1.13e-12 |
| US electric grid | Pyrene | model/secondary | 1.02e-11 | 1.13e-12 |
| Natural Gas Prod. | Benzo[b]fluoranthene | secondary | 1.00e-11 | 1.11e-12 |
| Fuel Oil #2 Prod. | o-xylene | secondary | 9.63e-12 | 1.07e-12 |
| Fuel Oil #4 Prod. | Ethylene dibromide | secondary | 9.49e-12 | 1.05e-12 |
| Fuel Oil #4 Prod. | Zinc (+2) | secondary | 9.20e-12 | 1.02e-12 |
| Natural Gas Prod. | Aromatic hydrocarbons | secondary | 8.92e-12 | 9.90e-13 |
| Natural Gas Prod. | Chrysene | secondary | 8.56e-12 | 9.49e-13 |
| Fuel Oil #4 Prod. | 3-Methylcholanthrene | secondary | 8.31e-12 | 9.22e-13 |
| Fuel Oil #2 Prod. | Ethylbenzene | secondary | 8.13e-12 | 9.02e-13 |
| Fuel Oil #6 Prod. | Methyl tert-butyl ether | secondary | 7.66e-12 | 8.49e-13 |
| US electric grid | 5-Methyl chrysene | model/secondary | 7.64e-12 | 8.47e-13 |
| Natural Gas Prod. | Biphenyl | secondary | 7.40e-12 | 8.21e-13 |
| US electric grid | o-xylene | model/secondary | 7.35e-12 | 8.15e-13 |
| US electric grid | Benzo[g,h,i]perylene | model/secondary | 6.98e-12 | 7.74e-13 |
| Fuel Oil #6 Prod. | Phenanthrene | secondary | 5.83e-12 | 6.47e-13 |
| Fuel Oil #6 Prod. | Vinyl acetate | secondary | 5.45e-12 | 6.05e-13 |
| Fuel Oil #4 Prod. | 2-Methylnaphthalene | secondary | 5.20e-12 | 5.77e-13 |
| Fuel Oil #6 Prod. | Ethylene dibromide | secondary | 5.06e-12 | 5.61e-13 |
| Natural Gas Prod. | Benzo[g,h,i]perylene | secondary | 5.03e-12 | 5.58e-13 |
| Fuel Oil #4 Prod. | Chlorine | secondary | 4.52e-12 | 5.02e-13 |
| Natural Gas Prod. | Copper (+1 & +2) | secondary | 4.17e-12 | 4.63e-13 |
| Fuel Oil #2 Prod. | Methyl tert-butyl ether | secondary | 4.08e-12 | 4.53e-13 |
| Natural Gas Prod. | Benzo[b,j,k]fluoranthene | secondary | 4.03e-12 | 4.46e-13 |
| Fuel Oil #4 Prod. | 1,1,1-Trichloroethane | secondary | 3.90e-12 | 4.33e-13 |
| Natural Gas Prod. | Pyrene | secondary | 3.86e-12 | 4.28e-13 |
| Fuel Oil #6 Prod. | 3-Methylcholanthrene | secondary | 3.73e-12 | 4.14e-13 |
| Fuel Oil #6 Prod. | Zinc (+2) | secondary | 3.63e-12 | 4.02e-13 |
| Fuel Oil #2 Prod. | Phenanthrene | secondary | 3.28e-12 | 3.64e-13 |
| Fuel Oil #4 Prod. | Acenaphthene | secondary | 3.27e-12 | 3.63e-13 |
| Fuel Oil #2 Prod. | Zinc (+2) | secondary | 3.16e-12 | 3.51e-13 |
| Fuel Oil #2 Prod. | Vinyl acetate | secondary | 2.91e-12 | 3.22e-13 |
| Fuel Oil #4 Prod. | Ethyl Chloride | secondary | 2.76e-12 | 3.07e-13 |
| Fuel Oil #2 Prod. | Ethylene dibromide | secondary | 2.69e-12 | 2.99e-13 |
| Fuel Oil #2 Prod. | 3-Methylcholanthrene | secondary | 2.66e-12 | 2.95e-13 |
| Natural Gas Prod. | Fluorene | secondary | 2.58e-12 | 2.87e-13 |
| Fuel Oil #4 Prod. | Cumene | secondary | 2.34e-12 | 2.59e-13 |
| Fuel Oil #6 Prod. | 2-Methylnaphthalene | secondary | 2.34e-12 | 2.59e-13 |

## Table M-34. LCD LCIA Results for the Chronic Public Health Effects Impact Category

| Process Group | Material | LCI Data Type | Chronic Public Toxicity (tox-kg) | % of Total |
|---|---|---|---|---|
| Natural Gas Prod. | Fluoranthene | secondary | 2.31e-12 | 2.56e-13 |
| Fuel Oil #4 Prod. | Benzo[a]pyrene | secondary | 2.12e-12 | 2.35e-13 |
| Fuel Oil #6 Prod. | 1,1,1-Trichloroethane | secondary | 2.08e-12 | 2.31e-13 |
| Fuel Oil #6 Prod. | Chlorine | secondary | 2.01e-12 | 2.23e-13 |
| Fuel Oil #2 Prod. | 2-Methylnaphthalene | secondary | 1.67e-12 | 1.85e-13 |
| Fuel Oil #6 Prod. | Acenaphthene | secondary | 1.59e-12 | 1.76e-13 |
| Fuel Oil #6 Prod. | Ethyl Chloride | secondary | 1.47e-12 | 1.63e-13 |
| Fuel Oil #2 Prod. | Chlorine | secondary | 1.46e-12 | 1.62e-13 |
| Fuel Oil #4 Prod. | Biphenyl | secondary | 1.40e-12 | 1.55e-13 |
| Fuel Oil #6 Prod. | Cumene | secondary | 1.25e-12 | 1.38e-13 |
| Fuel Oil #2 Prod. | 1,1,1-Trichloroethane | secondary | 1.11e-12 | 1.23e-13 |
| Fuel Oil #6 Prod. | Benzo[a]pyrene | secondary | 1.09e-12 | 1.21e-13 |
| Fuel Oil #4 Prod. | Acenaphthylene | secondary | 1.06e-12 | 1.18e-13 |
| Fuel Oil #4 Prod. | Anthracene | secondary | 1.02e-12 | 1.14e-13 |
| Fuel Oil #2 Prod. | Acenaphthene | secondary | 9.96e-13 | 1.10e-13 |
| Fuel Oil #4 Prod. | Dibenzo[a,h]anthracene | secondary | 9.37e-13 | 1.04e-13 |
| Fuel Oil #4 Prod. | Benzo[a]anthracene | secondary | 8.61e-13 | 9.55e-14 |
| Fuel Oil #4 Prod. | Lead cmpds | secondary | 8.20e-13 | 9.10e-14 |
| Natural Gas Prod. | 5-Methyl chrysene | secondary | 8.05e-13 | 8.93e-14 |
| Fuel Oil #2 Prod. | Ethyl Chloride | secondary | 7.85e-13 | 8.71e-14 |
| Fuel Oil #4 Prod. | Benzo[b,j,k]fluoranthene | secondary | 7.59e-13 | 8.42e-14 |
| Fuel Oil #6 Prod. | Biphenyl | secondary | 7.44e-13 | 8.25e-14 |
| Fuel Oil #4 Prod. | Nickel cmpds | secondary | 6.93e-13 | 7.69e-14 |
| Fuel Oil #2 Prod. | Cumene | secondary | 6.64e-13 | 7.37e-14 |
| Fuel Oil #4 Prod. | Indeno(1,2,3-cd)pyrene | secondary | 6.57e-13 | 7.29e-14 |
| Fuel Oil #2 Prod. | Benzo[a]pyrene | secondary | 6.19e-13 | 6.86e-14 |
| Fuel Oil #4 Prod. | Chrysene | secondary | 5.71e-13 | 6.33e-14 |
| Fuel Oil #6 Prod. | Acenaphthylene | secondary | 5.49e-13 | 6.09e-14 |
| Fuel Oil #6 Prod. | Anthracene | secondary | 5.18e-13 | 5.75e-14 |
| Fuel Oil #6 Prod. | Dibenzo[a,h]anthracene | secondary | 4.07e-13 | 4.51e-14 |
| Fuel Oil #6 Prod. | Benzo[a]anthracene | secondary | 4.05e-13 | 4.50e-14 |
| Fuel Oil #6 Prod. | Benzo[b,j,k]fluoranthene | secondary | 4.04e-13 | 4.49e-14 |
| Fuel Oil #2 Prod. | Biphenyl | secondary | 3.96e-13 | 4.40e-14 |
| Fuel Oil #4 Prod. | HALON-1301 | secondary | 3.57e-13 | 3.96e-14 |
| Fuel Oil #4 Prod. | Fluorene | secondary | 3.33e-13 | 3.69e-14 |
| Fuel Oil #4 Prod. | Benzo[b]fluoranthene | secondary | 3.24e-13 | 3.59e-14 |
| Fuel Oil #6 Prod. | Indeno(1,2,3-cd)pyrene | secondary | 3.18e-13 | 3.52e-14 |
| Fuel Oil #2 Prod. | Acenaphthylene | secondary | 3.10e-13 | 3.43e-14 |
| Fuel Oil #2 Prod. | Dibenzo[a,h]anthracene | secondary | 3.06e-13 | 3.39e-14 |
| Fuel Oil #2 Prod. | Lead cmpds | secondary | 3.06e-13 | 3.39e-14 |
| Fuel Oil #2 Prod. | Anthracene | secondary | 3.03e-13 | 3.36e-14 |
| Fuel Oil #6 Prod. | Chrysene | secondary | 2.82e-13 | 3.13e-14 |
| Fuel Oil #4 Prod. | Pyrene | secondary | 2.74e-13 | 3.04e-14 |
| Fuel Oil #4 Prod. | Fluoranthene | secondary | 2.69e-13 | 2.99e-14 |
| Fuel Oil #6 Prod. | Lead cmpds | secondary | 2.69e-13 | 2.98e-14 |
| Fuel Oil #2 Prod. | Benzo[a]anthracene | secondary | 2.68e-13 | 2.97e-14 |
| Fuel Oil #2 Prod. | Nickel cmpds | secondary | 2.58e-13 | 2.86e-14 |
| Fuel Oil #4 Prod. | Benzo[g,h,i]perylene | secondary | 2.49e-13 | 2.77e-14 |
| Fuel Oil #4 Prod. | Mercury compounds | secondary | 2.49e-13 | 2.76e-14 |
| Fuel Oil #6 Prod. | Nickel cmpds | secondary | 2.27e-13 | 2.52e-14 |
| Fuel Oil #2 Prod. | Benzo[b,j,k]fluoranthene | secondary | 2.16e-13 | 2.39e-14 |

## Table M-34. LCD LCIA Results for the Chronic Public Health Effects Impact Category

| Process Group | Material | LCI Data Type | Chronic Public Toxicity (tox-kg) | % of Total |
|---|---|---|---|---|
| Fuel Oil #2 Prod. | Indeno(1,2,3-cd)pyrene | secondary | 2.01e-13 | 2.23e-14 |
| Fuel Oil #6 Prod. | Fluorene | secondary | 1.74e-13 | 1.93e-14 |
| Fuel Oil #2 Prod. | Chrysene | secondary | 1.72e-13 | 1.90e-14 |
| Fuel Oil #4 Prod. | 5-Methyl chrysene | secondary | 1.52e-13 | 1.68e-14 |
| Fuel Oil #6 Prod. | Benzo[b]fluoranthene | secondary | 1.43e-13 | 1.58e-14 |
| Fuel Oil #6 Prod. | Fluoranthene | secondary | 1.40e-13 | 1.55e-14 |
| Fuel Oil #6 Prod. | Pyrene | secondary | 1.37e-13 | 1.52e-14 |
| Fuel Oil #2 Prod. | HALON-1301 | secondary | 1.33e-13 | 1.47e-14 |
| Fuel Oil #6 Prod. | HALON-1301 | secondary | 1.17e-13 | 1.30e-14 |
| Fuel Oil #6 Prod. | Benzo[g,h,i]perylene | secondary | 1.17e-13 | 1.29e-14 |
| Fuel Oil #2 Prod. | Benzo[b]fluoranthene | secondary | 1.05e-13 | 1.17e-14 |
| Fuel Oil #2 Prod. | Fluorene | secondary | 9.59e-14 | 1.06e-14 |
| Fuel Oil #2 Prod. | Mercury compounds | secondary | 9.27e-14 | 1.03e-14 |
| Fuel Oil #4 Prod. | Halogenated matter (organic) | secondary | 8.20e-14 | 9.10e-15 |
| Fuel Oil #2 Prod. | Pyrene | secondary | 8.17e-14 | 9.06e-15 |
| Fuel Oil #6 Prod. | Mercury compounds | secondary | 8.15e-14 | 9.04e-15 |
| Fuel Oil #6 Prod. | 5-Methyl chrysene | secondary | 8.09e-14 | 8.97e-15 |
| Fuel Oil #2 Prod. | Fluoranthene | secondary | 7.81e-14 | 8.66e-15 |
| Fuel Oil #2 Prod. | Benzo[g,h,i]perylene | secondary | 7.78e-14 | 8.63e-15 |
| Natural Gas Prod. | Lead cmpds | secondary | 7.44e-14 | 8.25e-15 |
| Natural Gas Prod. | Nickel cmpds | secondary | 6.29e-14 | 6.97e-15 |
| Fuel Oil #2 Prod. | 5-Methyl chrysene | secondary | 4.31e-14 | 4.78e-15 |
| Natural Gas Prod. | HALON-1301 | secondary | 3.24e-14 | 3.59e-15 |
| Fuel Oil #2 Prod. | Halogenated matter (organic) | secondary | 3.06e-14 | 3.39e-15 |
| LPG Production | Halogenated hydrocarbons (unspecified) | secondary | 2.80e-14 | 3.11e-15 |
| Fuel Oil #6 Prod. | Halogenated matter (organic) | secondary | 2.69e-14 | 2.98e-15 |
| Natural Gas Prod. | Mercury compounds | secondary | 2.26e-14 | 2.50e-15 |
| Natural Gas Prod. | Halogenated matter (organic) | secondary | 7.44e-15 | 8.25e-16 |
| Fuel Oil #4 Prod. | Halogenated hydrocarbons (unspecified) | secondary | 2.05e-16 | 2.27e-17 |
| Fuel Oil #2 Prod. | Halogenated hydrocarbons (unspecified) | secondary | 7.64e-17 | 8.48e-18 |
| Fuel Oil #6 Prod. | Halogenated hydrocarbons (unspecified) | secondary | 6.72e-17 | 7.46e-18 |
| Natural Gas Prod. | Halogenated hydrocarbons (unspecified) | secondary | 1.86e-17 | 2.06e-18 |
| **Total Manufacturing** | | | **2.35e+02** | **2.60e+01** |
| **Use, Maintenance and Repair Life-cycle Stage** | | | | |
| US electric grid | Sulfur dioxide | model/secondary | 6.15e+02 | 6.82e+01 |
| US electric grid | Nitrogen oxides | model/secondary | 8.79e-01 | 9.75e-02 |
| US electric grid | Methane | model/secondary | 4.81e-01 | 5.34e-02 |
| US electric grid | Carbon monoxide | model/secondary | 4.07e-01 | 4.52e-02 |
| US electric grid | Arsenic | model/secondary | 2.08e-01 | 2.31e-02 |
| US electric grid | Hydrochloric acid | model/secondary | 1.84e-01 | 2.04e-02 |
| US electric grid | PM-10 | model/secondary | 4.31e-02 | 4.78e-03 |
| US electric grid | Selenium | model/secondary | 3.46e-02 | 3.84e-03 |
| US electric grid | Vanadium | model/secondary | 2.61e-02 | 2.89e-03 |
| US electric grid | Hydrofluoric acid | model/secondary | 1.00e-02 | 1.11e-03 |
| US electric grid | Formaldehyde | model/secondary | 3.62e-03 | 4.01e-04 |
| US electric grid | Benzene | model/secondary | 2.60e-03 | 2.89e-04 |
| US electric grid | Nitrous oxide | model/secondary | 2.54e-03 | 2.81e-04 |
| US electric grid | Phosphorus (yellow or white) | model/secondary | 1.47e-03 | 1.63e-04 |
| US electric grid | Zinc (elemental) | model/secondary | 6.77e-04 | 7.51e-05 |

## Table M-34. LCD LCIA Results for the Chronic Public Health Effects Impact Category

| Process Group | Material | LCI Data Type | Chronic Public Toxicity (tox-kg) | % of Total |
|---|---|---|---|---|
| US electric grid | Antimony | model/secondary | 5.55e-04 | 6.16e-05 |
| US electric grid | Chromium (VI) | model/secondary | 2.00e-04 | 2.22e-05 |
| US electric grid | Molybdenum | model/secondary | 1.85e-04 | 2.06e-05 |
| US electric grid | Methyl hydrazine | model/secondary | 1.72e-04 | 1.91e-05 |
| US electric grid | 2-Chloroacetophenone | model/secondary | 1.61e-04 | 1.79e-05 |
| US electric grid | Bromomethane | model/secondary | 1.59e-04 | 1.77e-05 |
| US electric grid | Nickel | model/secondary | 8.64e-05 | 9.59e-06 |
| US electric grid | Cyanide (-1) | model/secondary | 8.37e-05 | 9.28e-06 |
| US electric grid | 2,3,7,8-TCDD | model/secondary | 6.34e-05 | 7.03e-06 |
| US electric grid | Naphthalene | model/secondary | 5.11e-05 | 5.67e-06 |
| US electric grid | Barium | model/secondary | 4.35e-05 | 4.82e-06 |
| US electric grid | Carbon disulfide | model/secondary | 3.42e-05 | 3.80e-06 |
| US electric grid | Benzyl chloride | model/secondary | 2.62e-05 | 2.91e-06 |
| US electric grid | Cadmium | model/secondary | 2.04e-05 | 2.27e-06 |
| US electric grid | Chloroform | model/secondary | 1.85e-05 | 2.05e-06 |
| US electric grid | Propionaldehyde | model/secondary | 1.71e-05 | 1.90e-06 |
| US electric grid | Manganese | model/secondary | 1.70e-05 | 1.89e-06 |
| US electric grid | Fluoride | model/secondary | 1.46e-05 | 1.62e-06 |
| US electric grid | Beryllium | model/secondary | 1.09e-05 | 1.21e-06 |
| US electric grid | Acrolein | model/secondary | 9.71e-06 | 1.08e-06 |
| US electric grid | Lead | model/secondary | 9.52e-06 | 1.06e-06 |
| US electric grid | Cobalt | model/secondary | 9.07e-06 | 1.01e-06 |
| US electric grid | Copper | model/secondary | 8.34e-06 | 9.25e-07 |
| US electric grid | Methyl chloride | model/secondary | 8.05e-06 | 8.93e-07 |
| US electric grid | Di(2-ethylhexyl)phthalate | model/secondary | 5.80e-06 | 6.43e-07 |
| US electric grid | Acetaldehyde | model/secondary | 4.62e-06 | 5.12e-07 |
| US electric grid | Hexane | model/secondary | 4.49e-06 | 4.98e-07 |
| US electric grid | Dimethyl sulfate | model/secondary | 3.21e-06 | 3.56e-07 |
| US electric grid | Mercury | model/secondary | 2.80e-06 | 3.11e-07 |
| US electric grid | Toluene | model/secondary | 1.59e-06 | 1.76e-07 |
| US electric grid | Isophorone | model/secondary | 1.55e-06 | 1.72e-07 |
| US electric grid | Methyl ethyl ketone | model/secondary | 1.24e-06 | 1.38e-07 |
| US electric grid | Tetrachloroethylene | model/secondary | 1.23e-06 | 1.36e-07 |
| US electric grid | 1,2-Dichloroethane | model/secondary | 1.09e-06 | 1.21e-07 |
| US electric grid | Methyl methacrylate | model/secondary | 1.06e-06 | 1.18e-07 |
| US electric grid | Styrene | model/secondary | 9.39e-07 | 1.04e-07 |
| US electric grid | Bromoform | model/secondary | 8.76e-07 | 9.72e-08 |
| US electric grid | Dichloromethane | model/secondary | 8.65e-07 | 9.59e-08 |
| US electric grid | Chlorobenzene | model/secondary | 7.01e-07 | 7.78e-08 |
| US electric grid | 2,4-Dinitrotoluene | model/secondary | 5.62e-07 | 6.23e-08 |
| US electric grid | Acetophenone | model/secondary | 5.16e-07 | 5.73e-08 |
| US electric grid | Ethylbenzene | model/secondary | 2.76e-07 | 3.07e-08 |
| US electric grid | Methyl tert-butyl ether | model/secondary | 1.39e-07 | 1.55e-08 |
| US electric grid | Phenol | model/secondary | 1.06e-07 | 1.18e-08 |
| US electric grid | Vinyl acetate | model/secondary | 9.93e-08 | 1.10e-08 |
| US electric grid | Phenanthrene | model/secondary | 9.35e-08 | 1.04e-08 |
| US electric grid | Ethylene dibromide | model/secondary | 9.21e-08 | 1.02e-08 |
| US electric grid | Xylene (mixed isomers) | model/secondary | 8.23e-08 | 9.13e-09 |
| US electric grid | Chromium (III) | model/secondary | 7.36e-08 | 8.16e-09 |
| US electric grid | 2,3,7,8-TCDF | model/secondary | 4.35e-08 | 4.83e-09 |
| US electric grid | 1,1,1-Trichloroethane | model/secondary | 4.05e-08 | 4.49e-09 |

## Table M-34. LCD LCIA Results for the Chronic Public Health Effects Impact Category

| Process Group | Material | LCI Data Type | Chronic Public Toxicity (tox-kg) | % of Total |
|---|---|---|---|---|
| US electric grid | Acenaphthene | model/secondary | 2.84e-08 | 3.15e-09 |
| US electric grid | Ethyl Chloride | model/secondary | 2.68e-08 | 2.98e-09 |
| US electric grid | Cumene | model/secondary | 2.27e-08 | 2.52e-09 |
| US electric grid | Biphenyl | model/secondary | 1.35e-08 | 1.50e-09 |
| US electric grid | Acenaphthylene | model/secondary | 8.42e-09 | 9.34e-10 |
| US electric grid | Benzo[a]pyrene | model/secondary | 7.97e-09 | 8.85e-10 |
| US electric grid | Benzo[b,j,k]fluoranthene | model/secondary | 7.94e-09 | 8.81e-10 |
| US electric grid | Anthracene | model/secondary | 7.35e-09 | 8.16e-10 |
| US electric grid | Benzo[a]anthracene | model/secondary | 5.29e-09 | 5.86e-10 |
| US electric grid | Chrysene | model/secondary | 3.83e-09 | 4.25e-10 |
| US electric grid | Indeno(1,2,3-cd)pyrene | model/secondary | 3.76e-09 | 4.17e-10 |
| US electric grid | Fluorene | model/secondary | 2.98e-09 | 3.31e-10 |
| US electric grid | Fluoranthene | model/secondary | 2.38e-09 | 2.64e-10 |
| US electric grid | Dibenzo[a,h]anthracene | model/secondary | 2.05e-09 | 2.27e-10 |
| US electric grid | 2-Methylnaphthalene | model/secondary | 1.99e-09 | 2.21e-10 |
| US electric grid | Pyrene | model/secondary | 1.97e-09 | 2.19e-10 |
| US electric grid | 5-Methyl chrysene | model/secondary | 1.47e-09 | 1.63e-10 |
| US electric grid | o-xylene | model/secondary | 1.42e-09 | 1.57e-10 |
| US electric grid | Benzo[g,h,i]perylene | model/secondary | 1.35e-09 | 1.49e-10 |
| **Total Use, Maintenance and Repair** | | | **6.17e+02** | **6.84e+01** |
| **End-of-life Life-cycle Stage** | | | | |
| US electric grid | Sulfur dioxide | model/secondary | 1.17e-01 | 1.29e-02 |
| LCD landfilling | Sulfur dioxide | primary | 4.45e-02 | 4.94e-03 |
| LCD incineration | Sulfur dioxide | secondary | 3.45e-02 | 3.83e-03 |
| LCD landfilling | Carbon monoxide | primary | 2.40e-03 | 2.66e-04 |
| LCD landfilling | Nitrogen dioxide | primary | 8.92e-04 | 9.90e-05 |
| US electric grid | Nitrogen oxides | model/secondary | 1.67e-04 | 1.85e-05 |
| LCD landfilling | PM | primary | 1.00e-04 | 1.11e-05 |
| US electric grid | Methane | model/secondary | 9.13e-05 | 1.01e-05 |
| US electric grid | Carbon monoxide | model/secondary | 7.73e-05 | 8.57e-06 |
| LCD incineration | Arsenic cmpds | secondary | 4.30e-05 | 4.77e-06 |
| US electric grid | Arsenic | model/secondary | 3.95e-05 | 4.38e-06 |
| LCD landfilling | Arsenic cmpds | primary | 3.65e-05 | 4.05e-06 |
| US electric grid | Hydrochloric acid | model/secondary | 3.49e-05 | 3.87e-06 |
| LCD landfilling | Methane | primary | 2.62e-05 | 2.91e-06 |
| LPG Production | Carbon monoxide | secondary | 2.27e-05 | 2.52e-06 |
| LCD landfilling | Benzene | primary | 9.74e-06 | 1.08e-06 |
| LCD incineration | Lead | secondary | 9.60e-06 | 1.06e-06 |
| US electric grid | PM-10 | model/secondary | 8.18e-06 | 9.08e-07 |
| LPG Production | Methane | secondary | 6.61e-06 | 7.33e-07 |
| US electric grid | Selenium | model/secondary | 6.57e-06 | 7.29e-07 |
| LPG Production | Sulfur oxides | secondary | 6.31e-06 | 7.00e-07 |
| US electric grid | Vanadium | model/secondary | 4.94e-06 | 5.48e-07 |
| LPG Production | Nitrogen oxides | secondary | 4.51e-06 | 5.01e-07 |
| LPG Production | Vanadium | secondary | 4.12e-06 | 4.58e-07 |
| LPG Production | Benzene | secondary | 3.38e-06 | 3.75e-07 |
| LCD landfilling | Silver compounds | primary | 2.52e-06 | 2.79e-07 |
| LCD incineration | Barium cmpds | secondary | 2.33e-06 | 2.58e-07 |
| LCD landfilling | Barium cmpds | primary | 1.96e-06 | 2.17e-07 |

## Table M-34. LCD LCIA Results for the Chronic Public Health Effects Impact Category

| Process Group | Material | LCI Data Type | Chronic Public Toxicity (tox-kg) | % of Total |
|---|---|---|---|---|
| LCD incineration | Silver compounds | secondary | 1.95e-06 | 2.17e-07 |
| US electric grid | Hydrofluoric acid | model/secondary | 1.91e-06 | 2.11e-07 |
| LCD landfilling | Hydrochloric acid | primary | 1.13e-06 | 1.25e-07 |
| LPG Production | PM | secondary | 1.02e-06 | 1.13e-07 |
| LCD landfilling | Ammonia | primary | 9.17e-07 | 1.02e-07 |
| LPG Production | Arsenic | secondary | 8.13e-07 | 9.02e-08 |
| US electric grid | Formaldehyde | model/secondary | 6.87e-07 | 7.62e-08 |
| LPG Production | Formaldehyde | secondary | 5.28e-07 | 5.86e-08 |
| US electric grid | Benzene | model/secondary | 4.94e-07 | 5.48e-08 |
| US electric grid | Nitrous oxide | model/secondary | 4.81e-07 | 5.34e-08 |
| LCD incineration | Cadmium cmpds | secondary | 3.54e-07 | 3.92e-08 |
| LCD landfilling | Cadmium cmpds | primary | 3.27e-07 | 3.62e-08 |
| US electric grid | Phosphorus (yellow or white) | model/secondary | 2.78e-07 | 3.09e-08 |
| LPG Production | Hydrochloric acid | secondary | 1.45e-07 | 1.61e-08 |
| US electric grid | Zinc (elemental) | model/secondary | 1.28e-07 | 1.42e-08 |
| LPG Production | Nitrous oxide | secondary | 1.28e-07 | 1.42e-08 |
| LCD landfilling | Hydrogen sulfide | primary | 1.11e-07 | 1.23e-08 |
| US electric grid | Antimony | model/secondary | 1.05e-07 | 1.17e-08 |
| LCD landfilling | Chromium (VI) | primary | 7.27e-08 | 8.07e-09 |
| LPG Production | Phosphorus (yellow or white) | secondary | 3.86e-08 | 4.29e-09 |
| US electric grid | Chromium (VI) | model/secondary | 3.80e-08 | 4.22e-09 |
| US electric grid | Molybdenum | model/secondary | 3.52e-08 | 3.90e-09 |
| US electric grid | Methyl hydrazine | model/secondary | 3.26e-08 | 3.62e-09 |
| US electric grid | 2-Chloroacetophenone | model/secondary | 3.06e-08 | 3.39e-09 |
| US electric grid | Bromomethane | model/secondary | 3.02e-08 | 3.35e-09 |
| LPG Production | Fluorides (F-) | secondary | 2.97e-08 | 3.29e-09 |
| LPG Production | Selenium | secondary | 2.92e-08 | 3.24e-09 |
| LPG Production | Hydrogen sulfide | secondary | 2.42e-08 | 2.68e-09 |
| LPG Production | Ammonia | secondary | 2.33e-08 | 2.58e-09 |
| US electric grid | Nickel | model/secondary | 1.64e-08 | 1.82e-09 |
| US electric grid | Cyanide (-1) | model/secondary | 1.59e-08 | 1.76e-09 |
| US electric grid | 2,3,7,8-TCDD | model/secondary | 1.20e-08 | 1.33e-09 |
| LCD landfilling | Selenium | primary | 1.05e-08 | 1.16e-09 |
| US electric grid | Naphthalene | model/secondary | 9.69e-09 | 1.08e-09 |
| US electric grid | Barium | model/secondary | 8.25e-09 | 9.15e-10 |
| LPG Production | Hydrofluoric acid | secondary | 7.91e-09 | 8.77e-10 |
| US electric grid | Carbon disulfide | model/secondary | 6.50e-09 | 7.21e-10 |
| LPG Production | Molybdenum | secondary | 6.49e-09 | 7.20e-10 |
| LPG Production | Chromium (VI) | secondary | 6.21e-09 | 6.89e-10 |
| LPG Production | Ethane | secondary | 6.11e-09 | 6.78e-10 |
| US electric grid | Benzyl chloride | model/secondary | 4.97e-09 | 5.52e-10 |
| LPG Production | Zinc (elemental) | secondary | 4.72e-09 | 5.24e-10 |
| LCD incineration | Mercury compounds | secondary | 4.57e-09 | 5.07e-10 |
| LCD landfilling | Carbon tetrachloride | primary | 4.07e-09 | 4.52e-10 |
| LCD landfilling | Mercury compounds | primary | 3.96e-09 | 4.39e-10 |
| US electric grid | Cadmium | model/secondary | 3.88e-09 | 4.30e-10 |
| LPG Production | Hexane | secondary | 3.55e-09 | 3.94e-10 |
| US electric grid | Chloroform | model/secondary | 3.51e-09 | 3.89e-10 |
| US electric grid | Propionaldehyde | model/secondary | 3.24e-09 | 3.60e-10 |
| US electric grid | Manganese | model/secondary | 3.23e-09 | 3.58e-10 |
| LCD landfilling | Chloroform | primary | 3.18e-09 | 3.53e-10 |

## Table M-34. LCD LCIA Results for the Chronic Public Health Effects Impact Category

| Process Group | Material | LCI Data Type | Chronic Public Toxicity (tox-kg) | % of Total |
|---|---|---|---|---|
| LCD incineration | Carbon tetrachloride | secondary | 3.16e-09 | 3.50e-10 |
| LPG Production | Phenol | secondary | 2.82e-09 | 3.12e-10 |
| US electric grid | Fluoride | model/secondary | 2.77e-09 | 3.07e-10 |
| LPG Production | Pentane | secondary | 2.56e-09 | 2.84e-10 |
| US electric grid | Beryllium | model/secondary | 2.06e-09 | 2.29e-10 |
| LCD landfilling | Toluene | primary | 1.98e-09 | 2.20e-10 |
| US electric grid | Acrolein | model/secondary | 1.84e-09 | 2.04e-10 |
| US electric grid | Lead | model/secondary | 1.81e-09 | 2.00e-10 |
| LPG Production | PM-10 | secondary | 1.77e-09 | 1.97e-10 |
| US electric grid | Cobalt | model/secondary | 1.72e-09 | 1.91e-10 |
| LPG Production | Nickel | secondary | 1.62e-09 | 1.80e-10 |
| US electric grid | Copper | model/secondary | 1.58e-09 | 1.76e-10 |
| US electric grid | Methyl chloride | model/secondary | 1.53e-09 | 1.69e-10 |
| LPG Production | Aluminum (+3) | secondary | 1.12e-09 | 1.24e-10 |
| US electric grid | Di(2-ethylhexyl)phthalate | model/secondary | 1.10e-09 | 1.22e-10 |
| US electric grid | Acetaldehyde | model/secondary | 8.76e-10 | 9.72e-11 |
| US electric grid | Hexane | model/secondary | 8.51e-10 | 9.44e-11 |
| LPG Production | Antimony | secondary | 8.44e-10 | 9.37e-11 |
| US electric grid | Dimethyl sulfate | model/secondary | 6.10e-10 | 6.76e-11 |
| US electric grid | Mercury | model/secondary | 5.32e-10 | 5.90e-11 |
| LCD incineration | Lead cmpds | secondary | 5.19e-10 | 5.75e-11 |
| LCD landfilling | Lead cmpds | primary | 4.80e-10 | 5.33e-11 |
| LPG Production | Nitrate | secondary | 4.77e-10 | 5.29e-11 |
| LCD landfilling | Xylene (mixed isomers) | primary | 4.08e-10 | 4.53e-11 |
| US electric grid | Toluene | model/secondary | 3.01e-10 | 3.34e-11 |
| US electric grid | Isophorone | model/secondary | 2.95e-10 | 3.27e-11 |
| LCD landfilling | Tetrachloroethylene | primary | 2.90e-10 | 3.21e-11 |
| LCD landfilling | 1,2-Dichloroethane | primary | 2.77e-10 | 3.07e-11 |
| US electric grid | Methyl ethyl ketone | model/secondary | 2.36e-10 | 2.62e-11 |
| US electric grid | Tetrachloroethylene | model/secondary | 2.33e-10 | 2.59e-11 |
| US electric grid | 1,2-Dichloroethane | model/secondary | 2.07e-10 | 2.30e-11 |
| US electric grid | Methyl methacrylate | model/secondary | 2.02e-10 | 2.24e-11 |
| US electric grid | Styrene | model/secondary | 1.78e-10 | 1.98e-11 |
| LCD landfilling | Trichloroethylene | primary | 1.72e-10 | 1.91e-11 |
| US electric grid | Bromoform | model/secondary | 1.66e-10 | 1.84e-11 |
| US electric grid | Dichloromethane | model/secondary | 1.64e-10 | 1.82e-11 |
| LPG Production | Copper | secondary | 1.37e-10 | 1.52e-11 |
| LPG Production | Methyl hydrazine | secondary | 1.35e-10 | 1.50e-11 |
| LPG Production | Silicon | secondary | 1.33e-10 | 1.48e-11 |
| LCD incineration | Trichloroethylene | secondary | 1.33e-10 | 1.48e-11 |
| US electric grid | Chlorobenzene | model/secondary | 1.33e-10 | 1.48e-11 |
| LPG Production | 2-Chloroacetophenone | secondary | 1.27e-10 | 1.41e-11 |
| LPG Production | Dimethylbenzanthracene | secondary | 1.26e-10 | 1.39e-11 |
| LPG Production | Bromomethane | secondary | 1.25e-10 | 1.39e-11 |
| LCD landfilling | Ethylbenzene | primary | 1.07e-10 | 1.19e-11 |
| US electric grid | 2,4-Dinitrotoluene | model/secondary | 1.07e-10 | 1.18e-11 |
| LPG Production | Naphthalene | secondary | 1.03e-10 | 1.14e-11 |
| US electric grid | Acetophenone | model/secondary | 9.79e-11 | 1.09e-11 |
| LPG Production | Lead | secondary | 9.74e-11 | 1.08e-11 |

## Table M-34. LCD LCIA Results for the Chronic Public Health Effects Impact Category

| Process Group | Material | LCI Data Type | Chronic Public Toxicity (tox-kg) | % of Total |
|---|---|---|---|---|
| LPG Production | Manganese | secondary | 8.79e-11 | 9.75e-12 |
| LPG Production | Beryllium | secondary | 8.45e-11 | 9.37e-12 |
| LPG Production | Barium | secondary | 7.34e-11 | 8.14e-12 |
| LPG Production | Cyanide (-1) | secondary | 6.59e-11 | 7.31e-12 |
| LPG Production | Barium cmpds | secondary | 6.25e-11 | 6.93e-12 |
| US electric grid | Ethylbenzene | model/secondary | 5.24e-11 | 5.82e-12 |
| LCD landfilling | Dichloromethane | primary | 4.84e-11 | 5.36e-12 |
| LPG Production | Cadmium | secondary | 3.63e-11 | 4.02e-12 |
| LCD landfilling | Vinyl chloride | primary | 3.62e-11 | 4.01e-12 |
| LCD incineration | Vinyl chloride | secondary | 2.81e-11 | 3.11e-12 |
| LPG Production | Carbon disulfide | secondary | 2.70e-11 | 2.99e-12 |
| US electric grid | Methyl tert-butyl ether | model/secondary | 2.65e-11 | 2.93e-12 |
| LPG Production | Benzyl chloride | secondary | 2.06e-11 | 2.29e-12 |
| US electric grid | Phenol | model/secondary | 2.02e-11 | 2.24e-12 |
| LPG Production | Cobalt | secondary | 1.98e-11 | 2.19e-12 |
| US electric grid | Vinyl acetate | model/secondary | 1.88e-11 | 2.09e-12 |
| US electric grid | Phenanthrene | model/secondary | 1.77e-11 | 1.97e-12 |
| US electric grid | Ethylene dibromide | model/secondary | 1.75e-11 | 1.94e-12 |
| US electric grid | Xylene (mixed isomers) | model/secondary | 1.56e-11 | 1.73e-12 |
| LPG Production | Aluminum (elemental) | secondary | 1.52e-11 | 1.69e-12 |
| LPG Production | Chloroform | secondary | 1.46e-11 | 1.61e-12 |
| US electric grid | Chromium (III) | model/secondary | 1.40e-11 | 1.55e-12 |
| LPG Production | Propionaldehyde | secondary | 1.35e-11 | 1.49e-12 |
| LCD incineration | o-xylene | secondary | 9.08e-12 | 1.01e-12 |
| US electric grid | 2,3,7,8-TCDF | model/secondary | 8.26e-12 | 9.16e-13 |
| LCD landfilling | Chromium (III) | primary | 7.92e-12 | 8.78e-13 |
| US electric grid | 1,1,1-Trichloroethane | model/secondary | 7.68e-12 | 8.52e-13 |
| LPG Production | Acrolein | secondary | 7.64e-12 | 8.48e-13 |
| LPG Production | Methyl chloride | secondary | 6.34e-12 | 7.03e-13 |
| US electric grid | Acenaphthene | model/secondary | 5.39e-12 | 5.98e-13 |
| US electric grid | Ethyl Chloride | model/secondary | 5.09e-12 | 5.65e-13 |
| LPG Production | Di(2-ethylhexyl)phthalate | secondary | 4.57e-12 | 5.07e-13 |
| US electric grid | Cumene | model/secondary | 4.31e-12 | 4.78e-13 |
| LPG Production | Acetaldehyde | secondary | 3.64e-12 | 4.03e-13 |
| LPG Production | Mercury | secondary | 3.42e-12 | 3.80e-13 |
| LPG Production | Cadmium cmpds | secondary | 2.74e-12 | 3.04e-13 |
| US electric grid | Biphenyl | model/secondary | 2.57e-12 | 2.85e-13 |
| LPG Production | Dimethyl sulfate | secondary | 2.53e-12 | 2.81e-13 |
| LPG Production | Toluene | secondary | 2.45e-12 | 2.72e-13 |
| US electric grid | Acenaphthylene | model/secondary | 1.60e-12 | 1.77e-13 |
| US electric grid | Benzo[a]pyrene | model/secondary | 1.51e-12 | 1.68e-13 |
| US electric grid | Benzo[b,j,k]fluoranthene | model/secondary | 1.51e-12 | 1.67e-13 |
| LPG Production | 1,4-Dichlorobenzene | secondary | 1.43e-12 | 1.58e-13 |
| US electric grid | Anthracene | model/secondary | 1.40e-12 | 1.55e-13 |
| LPG Production | Isophorone | secondary | 1.22e-12 | 1.36e-13 |
| LPG Production | Aromatic hydrocarbons | secondary | 1.10e-12 | 1.22e-13 |
| US electric grid | Benzo[a]anthracene | model/secondary | 1.00e-12 | 1.11e-13 |
| LPG Production | Methyl ethyl ketone | secondary | 9.79e-13 | 1.09e-13 |
| LPG Production | Tetrachloroethylene | secondary | 9.67e-13 | 1.07e-13 |
| LPG Production | 1,2-Dichloroethane | secondary | 8.60e-13 | 9.54e-14 |
| LPG Production | Methyl methacrylate | secondary | 8.36e-13 | 9.28e-14 |

## Table M-34. LCD LCIA Results for the Chronic Public Health Effects Impact Category

| Process Group | Material | LCI Data Type | Chronic Public Toxicity (tox-kg) | % of Total |
|---|---|---|---|---|
| LPG Production | Styrene | secondary | 7.39e-13 | 8.20e-14 |
| US electric grid | Chrysene | model/secondary | 7.27e-13 | 8.07e-14 |
| US electric grid | Indeno(1,2,3-cd)pyrene | model/secondary | 7.13e-13 | 7.91e-14 |
| LPG Production | Bromoform | secondary | 6.90e-13 | 7.66e-14 |
| LPG Production | Dichloromethane | secondary | 6.81e-13 | 7.55e-14 |
| LPG Production | Chromium (III) | secondary | 6.76e-13 | 7.50e-14 |
| US electric grid | Fluorene | model/secondary | 5.66e-13 | 6.28e-14 |
| LPG Production | Chlorobenzene | secondary | 5.52e-13 | 6.12e-14 |
| LPG Production | Copper (+1 & +2) | secondary | 5.16e-13 | 5.72e-14 |
| US electric grid | Fluoranthene | model/secondary | 4.52e-13 | 5.02e-14 |
| LPG Production | 2,4-Dinitrotoluene | secondary | 4.43e-13 | 4.91e-14 |
| LPG Production | Acetophenone | secondary | 4.06e-13 | 4.51e-14 |
| US electric grid | Dibenzo[a,h]anthracene | model/secondary | 3.88e-13 | 4.31e-14 |
| US electric grid | 2-Methylnaphthalene | model/secondary | 3.78e-13 | 4.19e-14 |
| US electric grid | Pyrene | model/secondary | 3.74e-13 | 4.15e-14 |
| US electric grid | 5-Methyl chrysene | model/secondary | 2.79e-13 | 3.10e-14 |
| LPG Production | o-xylene | secondary | 2.70e-13 | 3.00e-14 |
| US electric grid | o-xylene | model/secondary | 2.69e-13 | 2.98e-14 |
| US electric grid | Benzo[g,h,i]perylene | model/secondary | 2.55e-13 | 2.83e-14 |
| LPG Production | Ethylbenzene | secondary | 2.19e-13 | 2.43e-14 |
| LPG Production | Methyl tert-butyl ether | secondary | 1.10e-13 | 1.22e-14 |
| LPG Production | Zinc (+2) | secondary | 9.24e-14 | 1.03e-14 |
| LPG Production | Phenanthrene | secondary | 8.93e-14 | 9.90e-15 |
| LPG Production | Vinyl acetate | secondary | 7.82e-14 | 8.67e-15 |
| LPG Production | 3-Methylcholanthrene | secondary | 7.56e-14 | 8.38e-15 |
| LPG Production | Ethylene dibromide | secondary | 7.25e-14 | 8.04e-15 |
| LPG Production | 2-Methylnaphthalene | secondary | 4.73e-14 | 5.25e-15 |
| LPG Production | Chlorine | secondary | 4.19e-14 | 4.65e-15 |
| LPG Production | 1,1,1-Trichloroethane | secondary | 2.98e-14 | 3.31e-15 |
| LPG Production | Acenaphthene | secondary | 2.77e-14 | 3.07e-15 |
| LPG Production | Ethyl Chloride | secondary | 2.11e-14 | 2.34e-15 |
| LPG Production | Cumene | secondary | 1.79e-14 | 1.98e-15 |
| LPG Production | Benzo[a]pyrene | secondary | 1.69e-14 | 1.87e-15 |
| LPG Production | Biphenyl | secondary | 1.07e-14 | 1.18e-15 |
| LPG Production | Lead cmpds | secondary | 9.19e-15 | 1.02e-15 |
| LPG Production | Dibenzo[a,h]anthracene | secondary | 8.77e-15 | 9.72e-16 |
| LPG Production | Acenaphthylene | secondary | 8.43e-15 | 9.35e-16 |
| LPG Production | Anthracene | secondary | 8.31e-15 | 9.22e-16 |
| LPG Production | Nickel cmpds | secondary | 7.77e-15 | 8.62e-16 |
| LPG Production | Benzo[a]anthracene | secondary | 7.51e-15 | 8.33e-16 |
| LPG Production | Benzo[b,j,k]fluoranthene | secondary | 5.80e-15 | 6.43e-16 |
| LPG Production | Indeno(1,2,3-cd)pyrene | secondary | 5.59e-15 | 6.20e-16 |
| LPG Production | Chrysene | secondary | 4.74e-15 | 5.26e-16 |
| LPG Production | HALON-1301 | secondary | 4.00e-15 | 4.44e-16 |
| LPG Production | Benzo[b]fluoranthene | secondary | 3.00e-15 | 3.33e-16 |
| LPG Production | Mercury compounds | secondary | 2.79e-15 | 3.09e-16 |
| LPG Production | Fluorene | secondary | 2.60e-15 | 2.88e-16 |
| LPG Production | Pyrene | secondary | 2.25e-15 | 2.49e-16 |
| LPG Production | Benzo[g,h,i]perylene | secondary | 2.19e-15 | 2.42e-16 |

## Table M-34. LCD LCIA Results for the Chronic Public Health Effects Impact Category

| Process Group | Material | LCI Data Type | Chronic Public Toxicity (tox-kg) | % of Total |
|---|---|---|---|---|
| LPG Production | Fluoranthene | secondary | 2.12e-15 | 2.35e-16 |
| LPG Production | 5-Methyl chrysene | secondary | 1.16e-15 | 1.29e-16 |
| LPG Production | Halogenated matter (organic) | secondary | 9.19e-16 | 1.02e-16 |
| LPG Production | Halogenated hydrocarbons (unspecified) | secondary | 2.30e-18 | 2.55e-19 |
| Natural Gas Prod. | Halogenated hydrocarbons (unspecified) | secondary | -3.90e-18 | -4.33e-19 |
| LCD incineration | Halogenated hydrocarbons (unspecified) | secondary | -4.13e-17 | -4.58e-18 |
| Fuel Oil #4 Prod. | Halogenated hydrocarbons (unspecified) | secondary | -9.44e-16 | -1.05e-16 |
| Natural Gas Prod. | Halogenated matter (organic) | secondary | -1.56e-15 | -1.73e-16 |
| Natural Gas Prod. | Mercury compounds | secondary | -4.74e-15 | -5.25e-16 |
| Natural Gas Prod. | HALON-1301 | secondary | -6.79e-15 | -7.54e-16 |
| Natural Gas Prod. | Nickel cmpds | secondary | -1.32e-14 | -1.46e-15 |
| Natural Gas Prod. | Lead cmpds | secondary | -1.56e-14 | -1.73e-15 |
| LCD incineration | Halogenated matter (organic) | secondary | -2.38e-14 | -2.64e-15 |
| LCD incineration | HALON-1301 | secondary | -1.03e-13 | -1.15e-14 |
| Natural Gas Prod. | 5-Methyl chrysene | secondary | -1.69e-13 | -1.88e-14 |
| LCD incineration | Nickel cmpds | secondary | -2.01e-13 | -2.23e-14 |
| Fuel Oil #4 Prod. | Halogenated matter (organic) | secondary | -3.78e-13 | -4.19e-14 |
| Natural Gas Prod. | Fluoranthene | secondary | -4.85e-13 | -5.38e-14 |
| Natural Gas Prod. | Fluorene | secondary | -5.43e-13 | -6.02e-14 |
| LCD incineration | Benzo[b]fluoranthene | secondary | -6.58e-13 | -7.30e-14 |
| Fuel Oil #4 Prod. | 5-Methyl chrysene | secondary | -6.99e-13 | -7.76e-14 |
| Natural Gas Prod. | Pyrene | secondary | -8.10e-13 | -8.99e-14 |
| Natural Gas Prod. | Benzo[b,j,k]fluoranthene | secondary | -8.45e-13 | -9.38e-14 |
| Natural Gas Prod. | Copper (+1 & +2) | secondary | -8.77e-13 | -9.72e-14 |
| Natural Gas Prod. | Benzo[g,h,i]perylene | secondary | -1.06e-12 | -1.17e-13 |
| Fuel Oil #4 Prod. | Mercury compounds | secondary | -1.15e-12 | -1.27e-13 |
| Fuel Oil #4 Prod. | Benzo[g,h,i]perylene | secondary | -1.15e-12 | -1.27e-13 |
| Fuel Oil #4 Prod. | Fluoranthene | secondary | -1.24e-12 | -1.38e-13 |
| Fuel Oil #4 Prod. | Pyrene | secondary | -1.26e-12 | -1.40e-13 |
| Fuel Oil #4 Prod. | Benzo[b]fluoranthene | secondary | -1.49e-12 | -1.66e-13 |
| Fuel Oil #4 Prod. | Fluorene | secondary | -1.53e-12 | -1.70e-13 |
| Natural Gas Prod. | Biphenyl | secondary | -1.55e-12 | -1.72e-13 |
| Fuel Oil #4 Prod. | HALON-1301 | secondary | -1.64e-12 | -1.82e-13 |
| Natural Gas Prod. | Chrysene | secondary | -1.80e-12 | -1.99e-13 |
| LCD incineration | Dibenzo[a,h]anthracene | secondary | -1.83e-12 | -2.02e-13 |
| Natural Gas Prod. | Aromatic hydrocarbons | secondary | -1.87e-12 | -2.08e-13 |
| Natural Gas Prod. | Benzo[b]fluoranthene | secondary | -2.11e-12 | -2.34e-13 |
| Natural Gas Prod. | Acenaphthylene | secondary | -2.32e-12 | -2.57e-13 |
| Natural Gas Prod. | Indeno(1,2,3-cd)pyrene | secondary | -2.49e-12 | -2.76e-13 |
| Natural Gas Prod. | Cumene | secondary | -2.61e-12 | -2.89e-13 |
| Fuel Oil #4 Prod. | Chrysene | secondary | -2.63e-12 | -2.92e-13 |
| Natural Gas Prod. | Anthracene | secondary | -2.69e-12 | -2.99e-13 |
| Natural Gas Prod. | Benzo[a]anthracene | secondary | -2.83e-12 | -3.14e-13 |
| Fuel Oil #4 Prod. | Indeno(1,2,3-cd)pyrene | secondary | -3.03e-12 | -3.36e-13 |
| Natural Gas Prod. | Ethyl Chloride | secondary | -3.08e-12 | -3.42e-13 |
| Fuel Oil #4 Prod. | Nickel cmpds | secondary | -3.19e-12 | -3.54e-13 |
| Fuel Oil #4 Prod. | Benzo[b,j,k]fluoranthene | secondary | -3.50e-12 | -3.88e-13 |
| Fuel Oil #4 Prod. | Lead cmpds | secondary | -3.78e-12 | -4.19e-13 |
| Fuel Oil #4 Prod. | Benzo[a]anthracene | secondary | -3.97e-12 | -4.40e-13 |
| Fuel Oil #4 Prod. | Dibenzo[a,h]anthracene | secondary | -4.32e-12 | -4.79e-13 |
| Natural Gas Prod. | 1,1,1-Trichloroethane | secondary | -4.35e-12 | -4.82e-13 |

## Table M-34. LCD LCIA Results for the Chronic Public Health Effects Impact Category

| Process Group | Material | LCI Data Type | Chronic Public Toxicity (tox-kg) | % of Total |
|---|---|---|---|---|
| Natural Gas Prod. | Cadmium cmpds | secondary | -4.65e-12 | -5.16e-13 |
| Fuel Oil #4 Prod. | Anthracene | secondary | -4.72e-12 | -5.24e-13 |
| Fuel Oil #4 Prod. | Acenaphthylene | secondary | -4.90e-12 | -5.43e-13 |
| Natural Gas Prod. | Acenaphthene | secondary | -5.87e-12 | -6.52e-13 |
| Natural Gas Prod. | Dibenzo[a,h]anthracene | secondary | -5.88e-12 | -6.52e-13 |
| Fuel Oil #4 Prod. | Biphenyl | secondary | -6.43e-12 | -7.13e-13 |
| Natural Gas Prod. | Benzo[a]pyrene | secondary | -6.53e-12 | -7.25e-13 |
| Fuel Oil #4 Prod. | Benzo[a]pyrene | secondary | -9.76e-12 | -1.08e-12 |
| Natural Gas Prod. | Ethylene dibromide | secondary | -1.06e-11 | -1.17e-12 |
| Fuel Oil #4 Prod. | Cumene | secondary | -1.08e-11 | -1.20e-12 |
| LCD incineration | 2-Methylnaphthalene | secondary | -1.13e-11 | -1.25e-12 |
| Natural Gas Prod. | Vinyl acetate | secondary | -1.14e-11 | -1.26e-12 |
| Fuel Oil #4 Prod. | Ethyl Chloride | secondary | -1.27e-11 | -1.41e-12 |
| LCD incineration | Copper (+1 & +2) | secondary | -1.34e-11 | -1.48e-12 |
| Fuel Oil #4 Prod. | Acenaphthene | secondary | -1.51e-11 | -1.67e-12 |
| Natural Gas Prod. | Methyl tert-butyl ether | secondary | -1.60e-11 | -1.78e-12 |
| Fuel Oil #4 Prod. | 1,1,1-Trichloroethane | secondary | -1.80e-11 | -1.99e-12 |
| LCD incineration | 3-Methylcholanthrene | secondary | -1.80e-11 | -2.00e-12 |
| Fuel Oil #4 Prod. | Chlorine | secondary | -2.08e-11 | -2.31e-12 |
| Natural Gas Prod. | Phenanthrene | secondary | -2.33e-11 | -2.59e-12 |
| Fuel Oil #4 Prod. | 2-Methylnaphthalene | secondary | -2.40e-11 | -2.66e-12 |
| LCD incineration | Chlorine | secondary | -2.51e-11 | -2.79e-12 |
| LCD incineration | Benzo[g,h,i]perylene | secondary | -2.63e-11 | -2.92e-12 |
| Natural Gas Prod. | Aluminum (elemental) | secondary | -2.81e-11 | -3.12e-12 |
| LCD incineration | Aromatic hydrocarbons | secondary | -2.86e-11 | -3.17e-12 |
| LCD incineration | Zinc (+2) | secondary | -2.90e-11 | -3.22e-12 |
| LCD incineration | Dichlorobenzene (mixed isomers) | secondary | -3.18e-11 | -3.52e-12 |
| Natural Gas Prod. | Ethylbenzene | secondary | -3.20e-11 | -3.55e-12 |
| Natural Gas Prod. | 2-Methylnaphthalene | secondary | -3.58e-11 | -3.97e-12 |
| Fuel Oil #4 Prod. | 3-Methylcholanthrene | secondary | -3.83e-11 | -4.25e-12 |
| Fuel Oil #4 Prod. | Zinc (+2) | secondary | -4.24e-11 | -4.70e-12 |
| LCD incineration | 5-Methyl chrysene | secondary | -4.24e-11 | -4.70e-12 |
| Fuel Oil #4 Prod. | Ethylene dibromide | secondary | -4.37e-11 | -4.85e-12 |
| Fuel Oil #4 Prod. | Vinyl acetate | secondary | -4.71e-11 | -5.23e-12 |
| LCD incineration | Pyrene | secondary | -5.06e-11 | -5.62e-12 |
| Fuel Oil #4 Prod. | Phenanthrene | secondary | -5.20e-11 | -5.76e-12 |
| Natural Gas Prod. | Chromium (III) | secondary | -5.33e-11 | -5.91e-12 |
| Natural Gas Prod. | 3-Methylcholanthrene | secondary | -5.72e-11 | -6.35e-12 |
| Natural Gas Prod. | Acetophenone | secondary | -5.93e-11 | -6.57e-12 |
| Natural Gas Prod. | 2,4-Dinitrotoluene | secondary | -6.45e-11 | -7.16e-12 |
| LCD incineration | Fluoranthene | secondary | -6.52e-11 | -7.23e-12 |
| Fuel Oil #4 Prod. | Methyl tert-butyl ether | secondary | -6.62e-11 | -7.34e-12 |
| Natural Gas Prod. | Chlorobenzene | secondary | -8.05e-11 | -8.93e-12 |
| LCD incineration | Fluorene | secondary | -8.35e-11 | -9.27e-12 |
| LCD incineration | Indeno(1,2,3-cd)pyrene | secondary | -9.04e-11 | -1.00e-11 |
| LCD incineration | Chrysene | secondary | -9.73e-11 | -1.08e-11 |
| Natural Gas Prod. | Dichloromethane | secondary | -9.93e-11 | -1.10e-11 |
| Natural Gas Prod. | Bromoform | secondary | -1.01e-10 | -1.12e-11 |
| Natural Gas Prod. | Barium cmpds | secondary | -1.06e-10 | -1.18e-11 |

## Table M-34. LCD LCIA Results for the Chronic Public Health Effects Impact Category

| Process Group | Material | LCI Data Type | Chronic Public Toxicity (tox-kg) | % of Total |
|---|---|---|---|---|
| Natural Gas Prod. | Styrene | secondary | -1.08e-10 | -1.19e-11 |
| LCD incineration | Benzo[a]anthracene | secondary | -1.18e-10 | -1.31e-11 |
| Natural Gas Prod. | Methyl methacrylate | secondary | -1.22e-10 | -1.35e-11 |
| Natural Gas Prod. | 1,2-Dichloroethane | secondary | -1.25e-10 | -1.39e-11 |
| Fuel Oil #4 Prod. | Ethylbenzene | secondary | -1.32e-10 | -1.46e-11 |
| Natural Gas Prod. | Tetrachloroethylene | secondary | -1.41e-10 | -1.56e-11 |
| Natural Gas Prod. | Methyl ethyl ketone | secondary | -1.43e-10 | -1.58e-11 |
| Fuel Oil #4 Prod. | o-xylene | secondary | -1.43e-10 | -1.58e-11 |
| Natural Gas Prod. | Isophorone | secondary | -1.78e-10 | -1.98e-11 |
| Fuel Oil #4 Prod. | Chromium (III) | secondary | -2.04e-10 | -2.27e-11 |
| LCD incineration | Anthracene | secondary | -2.05e-10 | -2.28e-11 |
| LCD incineration | Benzo[b,j,k]fluoranthene | secondary | -2.12e-10 | -2.35e-11 |
| Fuel Oil #4 Prod. | Copper (+1 & +2) | secondary | -2.12e-10 | -2.35e-11 |
| LCD incineration | Benzo[a]pyrene | secondary | -2.31e-10 | -2.57e-11 |
| LCD incineration | Acenaphthylene | secondary | -2.41e-10 | -2.68e-11 |
| Fuel Oil #4 Prod. | Acetophenone | secondary | -2.45e-10 | -2.72e-11 |
| Natural Gas Prod. | Silicon | secondary | -2.46e-10 | -2.73e-11 |
| Fuel Oil #4 Prod. | 2,4-Dinitrotoluene | secondary | -2.67e-10 | -2.96e-11 |
| Natural Gas Prod. | Chlorine | secondary | -3.13e-10 | -3.48e-11 |
| Fuel Oil #4 Prod. | Chlorobenzene | secondary | -3.33e-10 | -3.69e-11 |
| Natural Gas Prod. | Zinc (+2) | secondary | -3.47e-10 | -3.85e-11 |
| Natural Gas Prod. | Dimethyl sulfate | secondary | -3.69e-10 | -4.09e-11 |
| LCD incineration | Biphenyl | secondary | -3.90e-10 | -4.32e-11 |
| Fuel Oil #4 Prod. | Dichloromethane | secondary | -4.11e-10 | -4.56e-11 |
| Fuel Oil #4 Prod. | Bromoform | secondary | -4.16e-10 | -4.62e-11 |
| Fuel Oil #4 Prod. | Styrene | secondary | -4.46e-10 | -4.94e-11 |
| Fuel Oil #4 Prod. | Aromatic hydrocarbons | secondary | -4.53e-10 | -5.03e-11 |
| Fuel Oil #4 Prod. | Methyl methacrylate | secondary | -5.04e-10 | -5.59e-11 |
| Fuel Oil #4 Prod. | 1,2-Dichloroethane | secondary | -5.19e-10 | -5.75e-11 |
| Natural Gas Prod. | Acetaldehyde | secondary | -5.30e-10 | -5.88e-11 |
| Fuel Oil #4 Prod. | Tetrachloroethylene | secondary | -5.83e-10 | -6.47e-11 |
| Fuel Oil #4 Prod. | Methyl ethyl ketone | secondary | -5.90e-10 | -6.54e-11 |
| Natural Gas Prod. | Mercury | secondary | -6.23e-10 | -6.92e-11 |
| LCD incineration | Cumene | secondary | -6.53e-10 | -7.25e-11 |
| LCD incineration | Acenaphthene | secondary | -6.59e-10 | -7.31e-11 |
| Natural Gas Prod. | Di(2-ethylhexyl)phthalate | secondary | -6.66e-10 | -7.39e-11 |
| LCD incineration | Aluminum (elemental) | secondary | -7.02e-10 | -7.79e-11 |
| Fuel Oil #4 Prod. | 1,4-Dichlorobenzene | secondary | -7.23e-10 | -8.02e-11 |
| Fuel Oil #4 Prod. | Isophorone | secondary | -7.37e-10 | -8.18e-11 |
| LCD incineration | Ethyl Chloride | secondary | -7.72e-10 | -8.57e-11 |
| Natural Gas Prod. | Methyl chloride | secondary | -9.24e-10 | -1.03e-10 |
| Natural Gas Prod. | 1,4-Dichlorobenzene | secondary | -1.08e-09 | -1.20e-10 |
| LCD incineration | 1,1,1-Trichloroethane | secondary | -1.09e-09 | -1.21e-10 |
| Natural Gas Prod. | Acrolein | secondary | -1.11e-09 | -1.24e-10 |
| Fuel Oil #4 Prod. | Cadmium cmpds | secondary | -1.12e-09 | -1.25e-10 |
| Fuel Oil #4 Prod. | Toluene | secondary | -1.35e-09 | -1.49e-10 |
| Natural Gas Prod. | o-xylene | secondary | -1.52e-09 | -1.69e-10 |
| Fuel Oil #4 Prod. | Dimethyl sulfate | secondary | -1.53e-09 | -1.69e-10 |
| Natural Gas Prod. | Cobalt | secondary | -1.75e-09 | -1.94e-10 |
| Natural Gas Prod. | Aluminum (+3) | secondary | -1.90e-09 | -2.10e-10 |
| Natural Gas Prod. | Propionaldehyde | secondary | -1.96e-09 | -2.18e-10 |

## Table M-34. LCD LCIA Results for the Chronic Public Health Effects Impact Category

| Process Group | Material | LCI Data Type | Chronic Public Toxicity (tox-kg) | % of Total |
|---|---|---|---|---|
| Fuel Oil #4 Prod. | Mercury | secondary | -2.05e-09 | -2.28e-10 |
| Natural Gas Prod. | Chloroform | secondary | -2.12e-09 | -2.35e-10 |
| Fuel Oil #4 Prod. | Acetaldehyde | secondary | -2.19e-09 | -2.43e-10 |
| LCD incineration | Xylene (mixed isomers) | secondary | -2.22e-09 | -2.46e-10 |
| LCD incineration | Phenanthrene | secondary | -2.61e-09 | -2.89e-10 |
| LCD incineration | Ethylene dibromide | secondary | -2.65e-09 | -2.94e-10 |
| Fuel Oil #4 Prod. | Di(2-ethylhexyl)phthalate | secondary | -2.75e-09 | -3.05e-10 |
| Natural Gas Prod. | Toluene | secondary | -2.86e-09 | -3.17e-10 |
| LCD incineration | Vinyl acetate | secondary | -2.86e-09 | -3.17e-10 |
| Natural Gas Prod. | Benzyl chloride | secondary | -3.01e-09 | -3.34e-10 |
| Natural Gas Prod. | PM-10 | secondary | -3.27e-09 | -3.63e-10 |
| Fuel Oil #4 Prod. | Methyl chloride | secondary | -3.82e-09 | -4.24e-10 |
| Natural Gas Prod. | Carbon disulfide | secondary | -3.93e-09 | -4.36e-10 |
| LCD incineration | Methyl tert-butyl ether | secondary | -4.01e-09 | -4.45e-10 |
| Fuel Oil #4 Prod. | Acrolein | secondary | -4.61e-09 | -5.11e-10 |
| Natural Gas Prod. | Phenol | secondary | -4.83e-09 | -5.36e-10 |
| Natural Gas Prod. | Cadmium | secondary | -5.28e-09 | -5.86e-10 |
| LCD incineration | Silicon | secondary | -6.14e-09 | -6.81e-10 |
| LCD incineration | Ethylbenzene | secondary | -7.87e-09 | -8.73e-10 |
| Fuel Oil #4 Prod. | Propionaldehyde | secondary | -8.11e-09 | -9.00e-10 |
| Fuel Oil #4 Prod. | Chloroform | secondary | -8.78e-09 | -9.74e-10 |
| Natural Gas Prod. | Cyanide (-1) | secondary | -9.61e-09 | -1.07e-09 |
| Natural Gas Prod. | Nitrate | secondary | -9.96e-09 | -1.10e-09 |
| Fuel Oil #4 Prod. | Aluminum (elemental) | secondary | -1.06e-08 | -1.18e-09 |
| LCD incineration | Chromium (III) | secondary | -1.13e-08 | -1.26e-09 |
| Fuel Oil #4 Prod. | Cobalt | secondary | -1.22e-08 | -1.36e-09 |
| Fuel Oil #4 Prod. | Benzyl chloride | secondary | -1.24e-08 | -1.38e-09 |
| Natural Gas Prod. | Manganese | secondary | -1.31e-08 | -1.45e-09 |
| LCD incineration | Chloroacetophenone | secondary | -1.35e-08 | -1.50e-09 |
| Natural Gas Prod. | Beryllium | secondary | -1.41e-08 | -1.57e-09 |
| Natural Gas Prod. | Lead | secondary | -1.43e-08 | -1.59e-09 |
| LCD incineration | Acetophenone | secondary | -1.49e-08 | -1.65e-09 |
| LCD incineration | 2,4-Dinitrotoluene | secondary | -1.62e-08 | -1.79e-09 |
| Fuel Oil #4 Prod. | Carbon disulfide | secondary | -1.63e-08 | -1.80e-09 |
| Natural Gas Prod. | Copper | secondary | -1.75e-08 | -1.94e-09 |
| Natural Gas Prod. | Bromomethane | secondary | -1.83e-08 | -2.03e-09 |
| Natural Gas Prod. | 2-Chloroacetophenone | secondary | -1.85e-08 | -2.05e-09 |
| Natural Gas Prod. | Barium | secondary | -1.95e-08 | -2.17e-09 |
| Natural Gas Prod. | Methyl hydrazine | secondary | -1.98e-08 | -2.19e-09 |
| LCD incineration | Chlorobenzene | secondary | -2.02e-08 | -2.24e-09 |
| Fuel Oil #4 Prod. | Cadmium | secondary | -2.16e-08 | -2.39e-09 |
| LCD incineration | Dichloromethane | secondary | -2.49e-08 | -2.76e-09 |
| LCD incineration | Bromoform | secondary | -2.52e-08 | -2.80e-09 |
| Fuel Oil #4 Prod. | Barium cmpds | secondary | -2.57e-08 | -2.85e-09 |
| LCD incineration | Styrene | secondary | -2.70e-08 | -3.00e-09 |
| LCD incineration | Aluminum (+3) | secondary | -2.89e-08 | -3.20e-09 |
| LCD incineration | Methyl methacrylate | secondary | -3.06e-08 | -3.39e-09 |
| LCD incineration | 1,2-Dichloroethane | secondary | -3.12e-08 | -3.46e-09 |
| LCD incineration | Dimethylbenzanthracene | secondary | -3.12e-08 | -3.47e-09 |

## Table M-34. LCD LCIA Results for the Chronic Public Health Effects Impact Category

| Process Group | Material | LCI Data Type | Chronic Public Toxicity (tox-kg) | % of Total |
|---|---|---|---|---|
| LCD incineration | Tetrachloroethylene | secondary | -3.51e-08 | -3.90e-09 |
| LCD incineration | Methyl ethyl ketone | secondary | -3.58e-08 | -3.97e-09 |
| Fuel Oil #4 Prod. | Barium | secondary | -3.61e-08 | -4.00e-09 |
| Fuel Oil #4 Prod. | Cyanide (-1) | secondary | -3.97e-08 | -4.41e-09 |
| Natural Gas Prod. | Naphthalene | secondary | -4.37e-08 | -4.84e-09 |
| Natural Gas Prod. | Hydrogen sulfide | secondary | -4.46e-08 | -4.94e-09 |
| LCD incineration | Isophorone | secondary | -4.47e-08 | -4.96e-09 |
| LCD incineration | Toluene | secondary | -4.73e-08 | -5.24e-09 |
| Fuel Oil #4 Prod. | Beryllium | secondary | -5.06e-08 | -5.62e-09 |
| Fuel Oil #4 Prod. | Manganese | secondary | -5.28e-08 | -5.86e-09 |
| Fuel Oil #4 Prod. | Naphthalene | secondary | -5.36e-08 | -5.94e-09 |
| Natural Gas Prod. | Nickel | secondary | -5.78e-08 | -6.41e-09 |
| Fuel Oil #4 Prod. | Lead | secondary | -5.88e-08 | -6.52e-09 |
| Fuel Oil #4 Prod. | Dimethylbenzanthracene | secondary | -6.37e-08 | -7.06e-09 |
| Fuel Oil #4 Prod. | Bromomethane | secondary | -7.56e-08 | -8.39e-09 |
| LCD incineration | Phenol | secondary | -7.60e-08 | -8.43e-09 |
| Fuel Oil #4 Prod. | 2-Chloroacetophenone | secondary | -7.65e-08 | -8.49e-09 |
| LCD incineration | PM-10 | secondary | -8.16e-08 | -9.05e-09 |
| Fuel Oil #4 Prod. | Methyl hydrazine | secondary | -8.17e-08 | -9.06e-09 |
| LCD incineration | Mercury | secondary | -8.42e-08 | -9.34e-09 |
| Fuel Oil #4 Prod. | Copper | secondary | -8.86e-08 | -9.82e-09 |
| LCD incineration | Dimethyl sulfate | secondary | -9.25e-08 | -1.03e-08 |
| Fuel Oil #4 Prod. | Silicon | secondary | -9.29e-08 | -1.03e-08 |
| Natural Gas Prod. | Dimethylbenzanthracene | secondary | -9.51e-08 | -1.06e-08 |
| LCD incineration | Acetaldehyde | secondary | -1.33e-07 | -1.47e-08 |
| Natural Gas Prod. | Antimony | secondary | -1.48e-07 | -1.64e-08 |
| LCD incineration | Di(2-ethylhexyl)phthalate | secondary | -1.67e-07 | -1.85e-08 |
| Fuel Oil #4 Prod. | Nitrate | secondary | -2.08e-07 | -2.31e-08 |
| LCD incineration | Methyl chloride | secondary | -2.32e-07 | -2.57e-08 |
| LCD incineration | Cobalt | secondary | -2.48e-07 | -2.76e-08 |
| LCD incineration | Copper | secondary | -2.67e-07 | -2.96e-08 |
| LCD incineration | Acrolein | secondary | -2.79e-07 | -3.10e-08 |
| Fuel Oil #4 Prod. | Antimony | secondary | -4.22e-07 | -4.68e-08 |
| Fuel Oil #4 Prod. | Aluminum (+3) | secondary | -4.59e-07 | -5.09e-08 |
| Natural Gas Prod. | Chromium (VI) | secondary | -4.90e-07 | -5.43e-08 |
| LCD incineration | Propionaldehyde | secondary | -4.92e-07 | -5.46e-08 |
| LCD incineration | Chloroform | secondary | -5.30e-07 | -5.88e-08 |
| Natural Gas Prod. | Phosphorus (yellow or white) | secondary | -5.86e-07 | -6.50e-08 |
| LCD incineration | Pentane | secondary | -6.12e-07 | -6.78e-08 |
| LCD incineration | Cadmium | secondary | -7.25e-07 | -8.04e-08 |
| LCD incineration | Benzyl chloride | secondary | -7.55e-07 | -8.37e-08 |
| Natural Gas Prod. | Molybdenum | secondary | -7.66e-07 | -8.50e-08 |
| LCD incineration | Barium | secondary | -8.87e-07 | -9.84e-08 |
| LCD incineration | Hexane | secondary | -9.76e-07 | -1.08e-07 |
| LCD incineration | Carbon disulfide | secondary | -9.86e-07 | -1.09e-07 |
| LCD incineration | Hydrogen sulfide | secondary | -1.03e-06 | -1.14e-07 |
| Fuel Oil #4 Prod. | Nickel | secondary | -1.09e-06 | -1.20e-07 |
| Natural Gas Prod. | Hydrofluoric acid | secondary | -1.15e-06 | -1.28e-07 |
| Fuel Oil #4 Prod. | Phenol | secondary | -1.16e-06 | -1.28e-07 |
| Fuel Oil #4 Prod. | PM-10 | secondary | -1.24e-06 | -1.37e-07 |
| Fuel Oil #4 Prod. | Pentane | secondary | -1.30e-06 | -1.44e-07 |

## Table M-34. LCD LCIA Results for the Chronic Public Health Effects Impact Category

| Process Group | Material | LCI Data Type | Chronic Public Toxicity (tox-kg) | % of Total |
|---|---|---|---|---|
| LCD incineration | Naphthalene | secondary | -1.33e-06 | -1.48e-07 |
| LCD incineration | Ethane | secondary | -1.46e-06 | -1.62e-07 |
| Fuel Oil #4 Prod. | Hexane | secondary | -1.80e-06 | -2.00e-07 |
| Fuel Oil #4 Prod. | Chromium (VI) | secondary | -1.88e-06 | -2.08e-07 |
| Natural Gas Prod. | Pentane | secondary | -1.94e-06 | -2.15e-07 |
| LCD incineration | Nitrate | secondary | -2.33e-06 | -2.58e-07 |
| Fuel Oil #4 Prod. | Zinc (elemental) | secondary | -2.35e-06 | -2.61e-07 |
| LCD incineration | Cyanide (-1) | secondary | -2.41e-06 | -2.67e-07 |
| Natural Gas Prod. | Hexane | secondary | -2.69e-06 | -2.98e-07 |
| Natural Gas Prod. | Zinc (elemental) | secondary | -2.81e-06 | -3.12e-07 |
| LCD incineration | Beryllium | secondary | -2.97e-06 | -3.30e-07 |
| Fuel Oil #4 Prod. | Ethane | secondary | -3.10e-06 | -3.43e-07 |
| LCD incineration | Manganese | secondary | -3.17e-06 | -3.52e-07 |
| Natural Gas Prod. | Selenium | secondary | -4.02e-06 | -4.46e-07 |
| Fuel Oil #4 Prod. | Molybdenum | secondary | -4.28e-06 | -4.75e-07 |
| Natural Gas Prod. | Fluorides (F-) | secondary | -4.50e-06 | -4.99e-07 |
| LCD incineration | Bromomethane | secondary | -4.59e-06 | -5.09e-07 |
| Natural Gas Prod. | Ethane | secondary | -4.63e-06 | -5.13e-07 |
| Fuel Oil #4 Prod. | Hydrofluoric acid | secondary | -4.77e-06 | -5.29e-07 |
| LCD incineration | Methyl hydrazine | secondary | -4.95e-06 | -5.49e-07 |
| LCD incineration | Molybdenum | secondary | -6.45e-06 | -7.16e-07 |
| Natural Gas Prod. | Nitrous oxide | secondary | -7.65e-06 | -8.48e-07 |
| LCD incineration | Nickel | secondary | -8.94e-06 | -9.91e-07 |
| Natural Gas Prod. | Formaldehyde | secondary | -9.17e-06 | -1.02e-06 |
| Fuel Oil #4 Prod. | Ammonia | secondary | -1.15e-05 | -1.27e-06 |
| LCD incineration | Antimony | secondary | -1.40e-05 | -1.55e-06 |
| LCD incineration | Zinc (elemental) | secondary | -1.65e-05 | -1.83e-06 |
| Fuel Oil #4 Prod. | Hydrogen sulfide | secondary | -1.68e-05 | -1.87e-06 |
| Fuel Oil #4 Prod. | Fluorides (F-) | secondary | -1.76e-05 | -1.95e-06 |
| Fuel Oil #4 Prod. | Selenium | secondary | -1.77e-05 | -1.97e-06 |
| Natural Gas Prod. | Hydrochloric acid | secondary | -2.11e-05 | -2.35e-06 |
| Natural Gas Prod. | Vanadium | secondary | -2.30e-05 | -2.56e-06 |
| Fuel Oil #4 Prod. | Phosphorus (yellow or white) | secondary | -2.63e-05 | -2.92e-06 |
| LCD incineration | Phosphorus (yellow or white) | secondary | -3.56e-05 | -3.95e-06 |
| LCD incineration | Ammonia | secondary | -4.82e-05 | -5.34e-06 |
| Fuel Oil #4 Prod. | Nitrous oxide | secondary | -8.16e-05 | -9.05e-06 |
| Fuel Oil #4 Prod. | Hydrochloric acid | secondary | -8.74e-05 | -9.69e-06 |
| LCD incineration | Chromium (VI) | secondary | -1.04e-04 | -1.15e-05 |
| Natural Gas Prod. | Arsenic | secondary | -1.04e-04 | -1.16e-05 |
| Natural Gas Prod. | Ammonia | secondary | -1.41e-04 | -1.56e-05 |
| Natural Gas Prod. | Sulfur oxides | secondary | -1.83e-04 | -2.02e-05 |
| Natural Gas Prod. | PM | secondary | -2.74e-04 | -3.04e-05 |
| LCD incineration | Hydrofluoric acid | secondary | -2.89e-04 | -3.21e-05 |
| LCD incineration | Formaldehyde | secondary | -2.90e-04 | -3.21e-05 |
| Fuel Oil #4 Prod. | Formaldehyde | secondary | -3.65e-04 | -4.05e-05 |
| Fuel Oil #4 Prod. | Arsenic | secondary | -5.00e-04 | -5.55e-05 |
| Fuel Oil #4 Prod. | PM | secondary | -5.75e-04 | -6.37e-05 |
| LCD incineration | Vanadium | secondary | -7.60e-04 | -8.43e-05 |
| LCD incineration | Selenium | secondary | -9.94e-04 | -1.10e-04 |

## Table M-34. LCD LCIA Results for the Chronic Public Health Effects Impact Category

| Process Group | Material | LCI Data Type | Chronic Public Toxicity (tox-kg) | % of Total |
|---|---|---|---|---|
| LCD incineration | Fluorides (F-) | secondary | -1.02e-03 | -1.13e-04 |
| LCD incineration | Nitrous oxide | secondary | -1.35e-03 | -1.50e-04 |
| Fuel Oil #4 Prod. | Benzene | secondary | -1.71e-03 | -1.90e-04 |
| LCD incineration | Benzene | secondary | -2.08e-03 | -2.31e-04 |
| Fuel Oil #4 Prod. | Nitrogen oxides | secondary | -2.55e-03 | -2.83e-04 |
| Fuel Oil #4 Prod. | Vanadium | secondary | -2.86e-03 | -3.17e-04 |
| LCD incineration | Hydrochloric acid | secondary | -3.08e-03 | -3.41e-04 |
| Fuel Oil #4 Prod. | Sulfur oxides | secondary | -3.48e-03 | -3.86e-04 |
| Fuel Oil #4 Prod. | Methane | secondary | -3.70e-03 | -4.10e-04 |
| Natural Gas Prod. | Nitrogen oxides | secondary | -6.17e-03 | -6.85e-04 |
| Fuel Oil #4 Prod. | Carbon monoxide | secondary | -1.08e-02 | -1.19e-03 |
| LCD incineration | Carbon monoxide | secondary | -1.55e-02 | -1.72e-03 |
| LCD incineration | Nitrogen oxides | secondary | -1.86e-02 | -2.07e-03 |
| LCD incineration | Methane | secondary | -1.97e-02 | -2.18e-03 |
| Natural Gas Prod. | Carbon monoxide | secondary | -2.27e-02 | -2.52e-03 |
| LCD incineration | PM | secondary | -2.40e-02 | -2.66e-03 |
| LCD incineration | Arsenic | secondary | -2.50e-02 | -2.78e-03 |
| Natural Gas Prod. | Benzene | secondary | -2.51e-02 | -2.78e-03 |
| Natural Gas Prod. | Methane | secondary | -3.32e-02 | -3.68e-03 |
| LCD incineration | Sulfur oxides | secondary | -3.50e-02 | -3.88e-03 |
| **Total End-of-life** | | | **-6.30e-02** | **-6.99e-03** |
| **Total All Life-cycle Stages** | | | **9.02e+02** | **1.00e+02** |

## Table M-35. CRT LCIA Results for the Aesthetics Impacts Category

| Process Group | Material | LCI Data Type | Odor (m3) | % of Total |
|---|---|---|---|---|
| **Materials Processing Life-cycle Stage** | | | | |
| Steel Prod., cold-rolled, semi-finished | Hydrogen sulfide | secondary | 3.17e+04 | 4.18e-01 |
| ABS Production | Hydrogen sulfide | secondary | 2.36e+04 | 3.11e-01 |
| Invar | Hydrogen sulfide | secondary | 1.69e+04 | 2.24e-01 |
| Ferrite mfg. | Hydrogen sulfide | secondary | 1.21e+04 | 1.59e-01 |
| Polycarbonate Production | Ethanethiol | secondary | 1.05e+04 | 1.39e-01 |
| Aluminum Prod. | Hydrogen sulfide | secondary | 8.78e+03 | 1.16e-01 |
| Lead | Hydrogen sulfide | secondary | 6.91e+03 | 9.12e-02 |
| ABS Production | Ethanethiol | secondary | 4.82e+03 | 6.37e-02 |
| Polycarbonate Production | Hydrogen sulfide | secondary | 4.30e+03 | 5.68e-02 |
| Invar | Acetaldehyde | secondary | 4.27e+03 | 5.64e-02 |
| Steel Prod., cold-rolled, semi-finished | Acetaldehyde | secondary | 2.48e+03 | 3.28e-02 |
| Ferrite mfg. | Acetaldehyde | secondary | 7.11e+02 | 9.38e-03 |
| Lead | Acetaldehyde | secondary | 5.50e+02 | 7.26e-03 |
| Styrene-butadiene Copolymer Prod. | Hydrogen sulfide | secondary | 4.82e+02 | 6.37e-03 |
| Steel Prod., cold-rolled, semi-finished | Ammonia | secondary | 4.15e+02 | 5.48e-03 |
| Aluminum Prod. | Acetic acid | secondary | 1.14e+02 | 1.50e-03 |
| Invar | Acetic acid | secondary | 9.41e+01 | 1.24e-03 |
| Steel Prod., cold-rolled, semi-finished | Acetic acid | secondary | 5.51e+01 | 7.27e-04 |
| Steel Prod., cold-rolled, semi-finished | Phenol | secondary | 4.82e+01 | 6.37e-04 |
| Aluminum Prod. | Xylene (mixed isomers) | secondary | 3.04e+01 | 4.01e-04 |
| ABS Production | Formaldehyde | secondary | 2.86e+01 | 3.77e-04 |
| Ferrite mfg. | Acetic acid | secondary | 2.35e+01 | 3.10e-04 |
| Lead | Acetic acid | secondary | 1.96e+01 | 2.59e-04 |
| Aluminum Prod. | Toluene | secondary | 1.39e+01 | 1.83e-04 |
| Invar | Phenol | secondary | 1.37e+01 | 1.81e-04 |
| Ferrite mfg. | Phenol | secondary | 1.33e+01 | 1.76e-04 |
| Steel Prod., cold-rolled, semi-finished | Toluene | secondary | 1.30e+01 | 1.71e-04 |
| Invar | Xylene (mixed isomers) | secondary | 1.19e+01 | 1.58e-04 |
| Aluminum Prod. | Ammonia | secondary | 9.03e+00 | 1.19e-04 |
| Steel Prod., cold-rolled, semi-finished | Xylene (mixed isomers) | secondary | 8.98e+00 | 1.19e-04 |
| ABS Production | Ethanol | secondary | 8.17e+00 | 1.08e-04 |
| Steel Prod., cold-rolled, semi-finished | Formaldehyde | secondary | 7.41e+00 | 9.78e-05 |
| Lead | Ammonia | secondary | 6.93e+00 | 9.15e-05 |
| Lead | Xylene (mixed isomers) | secondary | 5.59e+00 | 7.37e-05 |
| Invar | Toluene | secondary | 4.74e+00 | 6.25e-05 |
| Ferrite mfg. | Toluene | secondary | 4.62e+00 | 6.10e-05 |
| Invar | Ethanol | secondary | 3.58e+00 | 4.73e-05 |
| Invar | Ammonia | secondary | 3.55e+00 | 4.69e-05 |
| Ferrite mfg. | Xylene (mixed isomers) | secondary | 3.10e+00 | 4.09e-05 |
| Invar | Formaldehyde | secondary | 2.86e+00 | 3.77e-05 |
| Ferrite mfg. | Formaldehyde | secondary | 2.79e+00 | 3.68e-05 |
| Steel Prod., cold-rolled, semi-finished | Ethanol | secondary | 2.08e+00 | 2.74e-05 |
| Polycarbonate Production | Chlorine | secondary | 2.01e+00 | 2.66e-05 |
| Invar | Ethanethiol | secondary | 1.98e+00 | 2.62e-05 |
| Ferrite mfg. | Ethanethiol | secondary | 1.94e+00 | 2.56e-05 |
| ABS Production | Chlorine | secondary | 1.85e+00 | 2.44e-05 |
| Ferrite mfg. | Ammonia | secondary | 1.17e+00 | 1.55e-05 |
| Styrene-butadiene Copolymer Prod. | Chlorine | secondary | 9.01e-01 | 1.19e-05 |
| ABS Production | Ammonia | secondary | 8.49e-01 | 1.12e-05 |

## Table M-35. CRT LCIA Results for the Aesthetics Impacts Category

| Process Group | Material | LCI Data Type | Odor (m3) | % of Total |
|---|---|---|---|---|
| Invar | Methanol | secondary | 6.43e-01 | 8.49e-06 |
| Ferrite mfg. | Ethanol | secondary | 5.85e-01 | 7.73e-06 |
| Lead | Ethanol | secondary | 4.54e-01 | 5.99e-06 |
| Steel Prod., cold-rolled, semi-finished | Methanol | secondary | 4.11e-01 | 5.43e-06 |
| Steel Prod., cold-rolled, semi-finished | Benzene | secondary | 2.58e-01 | 3.41e-06 |
| Styrene-butadiene Copolymer Prod. | Ammonia | secondary | 2.07e-01 | 2.74e-06 |
| Invar | Benzene | secondary | 1.27e-01 | 1.68e-06 |
| Ferrite mfg. | Methanol | secondary | 1.16e-01 | 1.53e-06 |
| Aluminum Prod. | Phenol | secondary | 1.03e-01 | 1.36e-06 |
| Ferrite mfg. | Benzene | secondary | 8.64e-02 | 1.14e-06 |
| Steel Prod., cold-rolled, semi-finished | Naphthalene | secondary | 7.46e-02 | 9.84e-07 |
| Aluminum Prod. | Benzene | secondary | 6.00e-02 | 7.92e-07 |
| Lead | Methanol | secondary | 5.60e-02 | 7.39e-07 |
| Lead | Benzene | secondary | 4.09e-02 | 5.40e-07 |
| Invar | Propionic acid | secondary | 3.92e-02 | 5.18e-07 |
| Invar | Acetone | secondary | 1.59e-02 | 2.10e-07 |
| Steel Prod., cold-rolled, semi-finished | Acetone | secondary | 9.25e-03 | 1.22e-07 |
| Ferrite mfg. | Acetone | secondary | 2.61e-03 | 3.44e-08 |
| Lead | Acetone | secondary | 2.01e-03 | 2.65e-08 |
| Invar | Chlorine | secondary | 6.89e-04 | 9.09e-09 |
| Ferrite mfg. | Chlorine | secondary | 6.72e-04 | 8.88e-09 |
| Steel Prod., cold-rolled, semi-finished | Isopropylpropionate | secondary | 6.34e-04 | 8.36e-09 |
| Ferrite mfg. | Isopropylpropionate | secondary | 6.22e-04 | 8.21e-09 |
| Lead | Acrolein | secondary | 3.46e-04 | 4.57e-09 |
| Steel Prod., cold-rolled, semi-finished | Chlorine | secondary | 8.13e-05 | 1.07e-09 |
| Invar | Propionaldehyde | secondary | 4.43e-05 | 5.85e-10 |
| Steel Prod., cold-rolled, semi-finished | Propionaldehyde | secondary | 4.43e-05 | 5.85e-10 |
| Ferrite mfg. | Propionaldehyde | secondary | 4.33e-05 | 5.71e-10 |
| Invar | Acrolein | secondary | 1.44e-07 | 1.90e-12 |
| **Total Materials Processing** | | | **1.29e+05** | **1.70e+00** |
| **Manufacturing Life-cycle Stage** | | | | |
| LPG Production | Hydrogen sulfide | secondary | 7.15e+06 | 9.43e+01 |
| Fuel Oil #6 Prod. | Hydrogen sulfide | secondary | 7.40e+04 | 9.77e-01 |
| Fuel Oil #2 Prod. | Hydrogen sulfide | secondary | 2.36e+04 | 3.11e-01 |
| LPG Production | Acetaldehyde | secondary | 1.42e+04 | 1.87e-01 |
| CRT tube mfg. | Toluene | primary | 6.41e+03 | 8.46e-02 |
| US electric grid | Acetaldehyde | model/secondary | 3.03e+03 | 4.00e-02 |
| Fuel Oil #4 Prod. | Hydrogen sulfide | secondary | 2.76e+03 | 3.65e-02 |
| Japanese Electric Grid | Acetaldehyde | model/secondary | 2.42e+03 | 3.19e-02 |
| LPG Production | Formaldehyde | secondary | 2.39e+03 | 3.16e-02 |
| LPG Production | Ammonia | secondary | 2.18e+03 | 2.88e-02 |
| LPG Production | Propionaldehyde | secondary | 7.28e+02 | 9.61e-03 |
| CRT tube mfg. | Xylene (mixed isomers) | primary | 6.31e+02 | 8.33e-03 |
| Natural Gas Prod. | Ammonia | secondary | 1.57e+02 | 2.07e-03 |
| Natural Gas Prod. | Hydrogen sulfide | secondary | 1.57e+02 | 2.07e-03 |
| US electric grid | Propionaldehyde | model/secondary | 1.56e+02 | 2.06e-03 |
| LPG Production | Benzene | secondary | 1.33e+02 | 1.76e-03 |
| Japanese Electric Grid | Propionaldehyde | model/secondary | 1.24e+02 | 1.64e-03 |
| Fuel Oil #6 Prod. | Acetaldehyde | secondary | 1.14e+02 | 1.51e-03 |
| PWB Mfg. | Formaldehyde | model/secondary | 7.94e+01 | 1.05e-03 |
| Fuel Oil #2 Prod. | Acetaldehyde | secondary | 4.44e+01 | 5.86e-04 |

## Table M-35. CRT LCIA Results for the Aesthetics Impacts Category

| Process Group | Material | LCI Data Type | Odor (m3) | % of Total |
|---|---|---|---|---|
| LPG Production | Acrolein | secondary | 2.82e+01 | 3.72e-04 |
| Natural Gas Prod. | Acetaldehyde | secondary | 2.46e+01 | 3.24e-04 |
| Fuel Oil #6 Prod. | Formaldehyde | secondary | 2.45e+01 | 3.23e-04 |
| LPG Production | Benzyl chloride | secondary | 2.24e+01 | 2.95e-04 |
| Japanese Electric Grid | Formaldehyde | model/secondary | 2.09e+01 | 2.76e-04 |
| Natural Gas Prod. | Benzene | secondary | 1.18e+01 | 1.55e-04 |
| Fuel Oil #6 Prod. | Ammonia | secondary | 1.17e+01 | 1.55e-04 |
| Fuel Oil #2 Prod. | Formaldehyde | secondary | 7.87e+00 | 1.04e-04 |
| Fuel Oil #2 Prod. | Ammonia | secondary | 6.43e+00 | 8.49e-05 |
| LPG Production | Toluene | secondary | 6.21e+00 | 8.19e-05 |
| US electric grid | Acrolein | model/secondary | 6.03e+00 | 7.96e-05 |
| Fuel Oil #6 Prod. | Propionaldehyde | secondary | 5.87e+00 | 7.76e-05 |
| LPG Production | Carbon disulfide | secondary | 4.84e+00 | 6.39e-05 |
| Japanese Electric Grid | Acrolein | model/secondary | 4.81e+00 | 6.36e-05 |
| US electric grid | Benzyl chloride | model/secondary | 4.78e+00 | 6.31e-05 |
| Fuel Oil #4 Prod. | Acetaldehyde | secondary | 4.74e+00 | 6.25e-05 |
| LPG Production | Methyl ethyl ketone | secondary | 3.85e+00 | 5.08e-05 |
| Japanese Electric Grid | Benzyl chloride | model/secondary | 3.82e+00 | 5.04e-05 |
| LPG Production | Isophorone | secondary | 3.54e+00 | 4.67e-05 |
| US electric grid | Formaldehyde | model/secondary | 2.76e+00 | 3.65e-05 |
| LPG Production | Phenol | secondary | 2.75e+00 | 3.63e-05 |
| LPG Production | Styrene | secondary | 2.47e+00 | 3.25e-05 |
| Japanese Electric Grid | Toluene | model/secondary | 2.39e+00 | 3.15e-05 |
| Fuel Oil #2 Prod. | Propionaldehyde | secondary | 2.28e+00 | 3.02e-05 |
| LPG Production | Naphthalene | secondary | 1.75e+00 | 2.31e-05 |
| LPG Production | o-xylene | secondary | 1.33e+00 | 1.75e-05 |
| Natural Gas Prod. | Propionaldehyde | secondary | 1.26e+00 | 1.67e-05 |
| Japanese Electric Grid | Naphthalene | model/secondary | 1.11e+00 | 1.46e-05 |
| US electric grid | Carbon disulfide | model/secondary | 1.04e+00 | 1.37e-05 |
| Fuel Oil #4 Prod. | Formaldehyde | secondary | 9.18e-01 | 1.21e-05 |
| LPG Production | Cumene | secondary | 8.89e-01 | 1.17e-05 |
| Japanese Electric Grid | Carbon disulfide | model/secondary | 8.27e-01 | 1.09e-05 |
| US electric grid | Methyl ethyl ketone | model/secondary | 8.23e-01 | 1.09e-05 |
| Fuel Oil #6 Prod. | Benzene | secondary | 7.61e-01 | 1.00e-05 |
| US electric grid | Isophorone | model/secondary | 7.57e-01 | 9.99e-06 |
| US electric grid | Toluene | model/secondary | 6.78e-01 | 8.95e-06 |
| LPG Production | Methyl methacrylate | secondary | 6.71e-01 | 8.85e-06 |
| Japanese Electric Grid | Methyl ethyl ketone | model/secondary | 6.57e-01 | 8.67e-06 |
| Japanese Electric Grid | Isophorone | model/secondary | 6.04e-01 | 7.97e-06 |
| LPG Production | Methyl hydrazine | secondary | 6.00e-01 | 7.92e-06 |
| Fuel Oil #4 Prod. | Ammonia | secondary | 5.97e-01 | 7.88e-06 |
| US electric grid | Phenol | model/secondary | 5.89e-01 | 7.77e-06 |
| US electric grid | Styrene | model/secondary | 5.27e-01 | 6.96e-06 |
| Natural Gas Prod. | Formaldehyde | secondary | 4.95e-01 | 6.53e-06 |
| Japanese Electric Grid | Phenol | model/secondary | 4.70e-01 | 6.20e-06 |
| LPG Production | 2-Chloroacetophenone | secondary | 4.69e-01 | 6.20e-06 |
| Japanese Electric Grid | Styrene | model/secondary | 4.21e-01 | 5.56e-06 |
| LPG Production | 1,4-Dichlorobenzene | secondary | 4.12e-01 | 5.44e-06 |
| Fuel Oil #2 Prod. | Benzene | secondary | 3.96e-01 | 5.22e-06 |
| Fuel Oil #4 Prod. | Propionaldehyde | secondary | 2.44e-01 | 3.22e-06 |
| Fuel Oil #6 Prod. | Acrolein | secondary | 2.27e-01 | 3.00e-06 |

## Table M-35. CRT LCIA Results for the Aesthetics Impacts Category

| Process Group | Material | LCI Data Type | Odor (m3) | % of Total |
|---|---|---|---|---|
| US electric grid | Cumene | model/secondary | 1.90e-01 | 2.51e-06 |
| Fuel Oil #6 Prod. | Benzyl chloride | secondary | 1.80e-01 | 2.38e-06 |
| LPG Production | Chlorobenzene | secondary | 1.48e-01 | 1.95e-06 |
| US electric grid | Naphthalene | model/secondary | 1.46e-01 | 1.93e-06 |
| US electric grid | Methyl methacrylate | model/secondary | 1.43e-01 | 1.89e-06 |
| US electric grid | Methyl hydrazine | model/secondary | 1.28e-01 | 1.69e-06 |
| LPG Production | Vinyl acetate | secondary | 1.27e-01 | 1.68e-06 |
| Japanese Electric Grid | Methyl methacrylate | model/secondary | 1.15e-01 | 1.51e-06 |
| Japanese Electric Grid | Methyl hydrazine | model/secondary | 1.03e-01 | 1.35e-06 |
| US electric grid | 2-Chloroacetophenone | model/secondary | 1.00e-01 | 1.33e-06 |
| Natural Gas Prod. | o-xylene | secondary | 8.89e-02 | 1.17e-06 |
| Fuel Oil #2 Prod. | Acrolein | secondary | 8.84e-02 | 1.17e-06 |
| US electric grid | Xylene (mixed isomers) | model/secondary | 8.70e-02 | 1.15e-06 |
| Natural Gas Prod. | Toluene | secondary | 8.63e-02 | 1.14e-06 |
| Japanese Electric Grid | 2-Chloroacetophenone | model/secondary | 8.02e-02 | 1.06e-06 |
| Fuel Oil #2 Prod. | Benzyl chloride | secondary | 7.01e-02 | 9.26e-07 |
| Japanese Electric Grid | Xylene (mixed isomers) | model/secondary | 6.95e-02 | 9.17e-07 |
| LPG Production | Acetophenone | secondary | 6.71e-02 | 8.85e-07 |
| Natural Gas Prod. | Acrolein | secondary | 4.89e-02 | 6.45e-07 |
| Fuel Oil #6 Prod. | Toluene | secondary | 4.18e-02 | 5.52e-07 |
| Fuel Oil #6 Prod. | Carbon disulfide | secondary | 3.91e-02 | 5.16e-07 |
| Natural Gas Prod. | Benzyl chloride | secondary | 3.88e-02 | 5.12e-07 |
| Fuel Oil #4 Prod. | Benzene | secondary | 3.74e-02 | 4.94e-07 |
| LPG Production | Tetrachloroethylene | secondary | 3.47e-02 | 4.59e-07 |
| US electric grid | Chlorobenzene | model/secondary | 3.16e-02 | 4.17e-07 |
| Fuel Oil #6 Prod. | Methyl ethyl ketone | secondary | 3.10e-02 | 4.10e-07 |
| Fuel Oil #6 Prod. | Isophorone | secondary | 2.85e-02 | 3.77e-07 |
| US electric grid | Vinyl acetate | model/secondary | 2.73e-02 | 3.60e-07 |
| LPG Production | 1,1,1-Trichloroethane | secondary | 2.53e-02 | 3.34e-07 |
| Japanese Electric Grid | Chlorobenzene | model/secondary | 2.52e-02 | 3.33e-07 |
| Japanese Electric Grid | o-xylene | model/secondary | 2.48e-02 | 3.27e-07 |
| LPG Production | Chlorine | secondary | 2.32e-02 | 3.06e-07 |
| Fuel Oil #6 Prod. | Phenol | secondary | 2.22e-02 | 2.93e-07 |
| Japanese Electric Grid | Vinyl acetate | model/secondary | 2.17e-02 | 2.87e-07 |
| Fuel Oil #6 Prod. | Styrene | secondary | 1.99e-02 | 2.63e-07 |
| Fuel Oil #2 Prod. | Toluene | secondary | 1.89e-02 | 2.49e-07 |
| US electric grid | Benzene | model/secondary | 1.73e-02 | 2.28e-07 |
| Fuel Oil #2 Prod. | Carbon disulfide | secondary | 1.52e-02 | 2.01e-07 |
| US electric grid | Acetophenone | model/secondary | 1.43e-02 | 1.89e-07 |
| Japanese Electric Grid | Benzene | model/secondary | 1.41e-02 | 1.87e-07 |
| Japanese Electric Grid | 1,1,1-Trichloroethane | model/secondary | 1.22e-02 | 1.61e-07 |
| Fuel Oil #2 Prod. | Methyl ethyl ketone | secondary | 1.21e-02 | 1.59e-07 |
| Japanese Electric Grid | Acetophenone | model/secondary | 1.15e-02 | 1.51e-07 |
| Fuel Oil #2 Prod. | Isophorone | secondary | 1.11e-02 | 1.46e-07 |
| LPG Production | 1,2-Dichloroethane | secondary | 1.07e-02 | 1.42e-07 |
| Fuel Oil #6 Prod. | Naphthalene | secondary | 1.06e-02 | 1.40e-07 |
| Fuel Oil #4 Prod. | Acrolein | secondary | 9.43e-03 | 1.24e-07 |
| Natural Gas Prod. | Naphthalene | secondary | 8.83e-03 | 1.17e-07 |
| Fuel Oil #2 Prod. | Phenol | secondary | 8.63e-03 | 1.14e-07 |
| Natural Gas Prod. | Carbon disulfide | secondary | 8.40e-03 | 1.11e-07 |
| Fuel Oil #6 Prod. | o-xylene | secondary | 8.28e-03 | 1.09e-07 |

## Table M-35. CRT LCIA Results for the Aesthetics Impacts Category

| Process Group | Material | LCI Data Type | Odor (m3) | % of Total |
|---|---|---|---|---|
| Fuel Oil #2 Prod. | Styrene | secondary | 7.73e-03 | 1.02e-07 |
| Fuel Oil #4 Prod. | Benzyl chloride | secondary | 7.48e-03 | 9.87e-08 |
| US electric grid | Tetrachloroethylene | model/secondary | 7.43e-03 | 9.81e-08 |
| Fuel Oil #6 Prod. | Cumene | secondary | 7.17e-03 | 9.46e-08 |
| Natural Gas Prod. | Methyl ethyl ketone | secondary | 6.67e-03 | 8.81e-08 |
| Natural Gas Prod. | Isophorone | secondary | 6.13e-03 | 8.10e-08 |
| Japanese Electric Grid | Tetrachloroethylene | model/secondary | 5.94e-03 | 7.83e-08 |
| US electric grid | 1,1,1-Trichloroethane | model/secondary | 5.79e-03 | 7.64e-08 |
| Fuel Oil #6 Prod. | Methyl methacrylate | secondary | 5.41e-03 | 7.14e-08 |
| Fuel Oil #2 Prod. | Naphthalene | secondary | 5.24e-03 | 6.92e-08 |
| Fuel Oil #6 Prod. | Methyl hydrazine | secondary | 4.84e-03 | 6.39e-08 |
| Natural Gas Prod. | Phenol | secondary | 4.77e-03 | 6.30e-08 |
| Natural Gas Prod. | Styrene | secondary | 4.28e-03 | 5.65e-08 |
| Fuel Oil #2 Prod. | o-xylene | secondary | 3.99e-03 | 5.27e-08 |
| Fuel Oil #6 Prod. | 2-Chloroacetophenone | secondary | 3.79e-03 | 5.00e-08 |
| Natural Gas Prod. | 1,4-Dichlorobenzene | secondary | 3.71e-03 | 4.90e-08 |
| LPG Production | Dichloromethane | secondary | 3.04e-03 | 4.01e-08 |
| Fuel Oil #2 Prod. | Cumene | secondary | 2.79e-03 | 3.68e-08 |
| Fuel Oil #6 Prod. | 1,4-Dichlorobenzene | secondary | 2.36e-03 | 3.11e-08 |
| US electric grid | 1,2-Dichloroethane | model/secondary | 2.30e-03 | 3.03e-08 |
| Fuel Oil #2 Prod. | Methyl methacrylate | secondary | 2.10e-03 | 2.78e-08 |
| Natural Gas Prod. | Chlorine | secondary | 2.06e-03 | 2.72e-08 |
| Fuel Oil #4 Prod. | Toluene | secondary | 1.89e-03 | 2.49e-08 |
| Fuel Oil #2 Prod. | Methyl hydrazine | secondary | 1.88e-03 | 2.48e-08 |
| Japanese Electric Grid | 1,2-Dichloroethane | model/secondary | 1.83e-03 | 2.42e-08 |
| Fuel Oil #4 Prod. | Carbon disulfide | secondary | 1.62e-03 | 2.14e-08 |
| Natural Gas Prod. | Cumene | secondary | 1.54e-03 | 2.03e-08 |
| Fuel Oil #2 Prod. | 2-Chloroacetophenone | secondary | 1.47e-03 | 1.94e-08 |
| Fuel Oil #4 Prod. | Methyl ethyl ketone | secondary | 1.29e-03 | 1.70e-08 |
| Fuel Oil #2 Prod. | 1,4-Dichlorobenzene | secondary | 1.22e-03 | 1.62e-08 |
| Fuel Oil #6 Prod. | Chlorobenzene | secondary | 1.19e-03 | 1.57e-08 |
| Fuel Oil #4 Prod. | Isophorone | secondary | 1.18e-03 | 1.56e-08 |
| US electric grid | o-xylene | model/secondary | 1.17e-03 | 1.55e-08 |
| Natural Gas Prod. | Methyl methacrylate | secondary | 1.16e-03 | 1.54e-08 |
| Natural Gas Prod. | Methyl hydrazine | secondary | 1.04e-03 | 1.37e-08 |
| Fuel Oil #6 Prod. | Vinyl acetate | secondary | 1.03e-03 | 1.36e-08 |
| Fuel Oil #4 Prod. | Phenol | secondary | 9.20e-04 | 1.21e-08 |
| Fuel Oil #4 Prod. | Styrene | secondary | 8.25e-04 | 1.09e-08 |
| Natural Gas Prod. | 2-Chloroacetophenone | secondary | 8.14e-04 | 1.07e-08 |
| US electric grid | Dichloromethane | model/secondary | 6.50e-04 | 8.58e-09 |
| LPG Production | Chloroform | secondary | 6.09e-04 | 8.04e-09 |
| Fuel Oil #6 Prod. | Acetophenone | secondary | 5.41e-04 | 7.14e-09 |
| Japanese Electric Grid | Dichloromethane | model/secondary | 5.19e-04 | 6.85e-09 |
| Fuel Oil #4 Prod. | Naphthalene | secondary | 5.05e-04 | 6.67e-09 |
| Fuel Oil #2 Prod. | Chlorobenzene | secondary | 4.63e-04 | 6.11e-09 |
| Fuel Oil #2 Prod. | Vinyl acetate | secondary | 4.00e-04 | 5.28e-09 |
| Fuel Oil #4 Prod. | o-xylene | secondary | 3.89e-04 | 5.13e-09 |
| Fuel Oil #4 Prod. | Cumene | secondary | 2.97e-04 | 3.92e-09 |
| Fuel Oil #6 Prod. | Tetrachloroethylene | secondary | 2.80e-04 | 3.70e-09 |
| Natural Gas Prod. | Chlorobenzene | secondary | 2.56e-04 | 3.38e-09 |
| Fuel Oil #4 Prod. | Methyl methacrylate | secondary | 2.24e-04 | 2.96e-09 |

## Table M-35. CRT LCIA Results for the Aesthetics Impacts Category

| Process Group | Material | LCI Data Type | Odor (m3) | % of Total |
|---|---|---|---|---|
| Natural Gas Prod. | Vinyl acetate | secondary | 2.21e-04 | 2.92e-09 |
| Fuel Oil #2 Prod. | Acetophenone | secondary | 2.10e-04 | 2.78e-09 |
| Fuel Oil #6 Prod. | 1,1,1-Trichloroethane | secondary | 2.04e-04 | 2.70e-09 |
| Fuel Oil #4 Prod. | Methyl hydrazine | secondary | 2.01e-04 | 2.65e-09 |
| Fuel Oil #4 Prod. | 2-Chloroacetophenone | secondary | 1.57e-04 | 2.07e-09 |
| US electric grid | Chloroform | model/secondary | 1.30e-04 | 1.72e-09 |
| Fuel Oil #6 Prod. | Chlorine | secondary | 1.29e-04 | 1.70e-09 |
| Natural Gas Prod. | Acetophenone | secondary | 1.16e-04 | 1.54e-09 |
| Fuel Oil #4 Prod. | 1,4-Dichlorobenzene | secondary | 1.16e-04 | 1.53e-09 |
| Fuel Oil #2 Prod. | Tetrachloroethylene | secondary | 1.09e-04 | 1.44e-09 |
| Japanese Electric Grid | Chloroform | model/secondary | 1.04e-04 | 1.37e-09 |
| Fuel Oil #6 Prod. | 1,2-Dichloroethane | secondary | 8.66e-05 | 1.14e-09 |
| Fuel Oil #2 Prod. | 1,1,1-Trichloroethane | secondary | 7.94e-05 | 1.05e-09 |
| Fuel Oil #2 Prod. | Chlorine | secondary | 6.80e-05 | 8.97e-10 |
| Natural Gas Prod. | Tetrachloroethylene | secondary | 6.03e-05 | 7.96e-10 |
| Fuel Oil #4 Prod. | Chlorobenzene | secondary | 4.94e-05 | 6.52e-10 |
| Natural Gas Prod. | 1,1,1-Trichloroethane | secondary | 4.39e-05 | 5.79e-10 |
| Fuel Oil #4 Prod. | Vinyl acetate | secondary | 4.26e-05 | 5.63e-10 |
| Fuel Oil #2 Prod. | 1,2-Dichloroethane | secondary | 3.37e-05 | 4.44e-10 |
| Fuel Oil #6 Prod. | Dichloromethane | secondary | 2.45e-05 | 3.24e-10 |
| Fuel Oil #4 Prod. | Acetophenone | secondary | 2.24e-05 | 2.96e-10 |
| Natural Gas Prod. | 1,2-Dichloroethane | secondary | 1.86e-05 | 2.46e-10 |
| Fuel Oil #4 Prod. | Tetrachloroethylene | secondary | 1.16e-05 | 1.53e-10 |
| Fuel Oil #2 Prod. | Dichloromethane | secondary | 9.53e-06 | 1.26e-10 |
| Fuel Oil #4 Prod. | 1,1,1-Trichloroethane | secondary | 8.47e-06 | 1.12e-10 |
| Fuel Oil #4 Prod. | Chlorine | secondary | 6.40e-06 | 8.44e-11 |
| Natural Gas Prod. | Dichloromethane | secondary | 5.27e-06 | 6.96e-11 |
| Fuel Oil #6 Prod. | Chloroform | secondary | 4.91e-06 | 6.48e-11 |
| Fuel Oil #4 Prod. | 1,2-Dichloroethane | secondary | 3.59e-06 | 4.74e-11 |
| Fuel Oil #2 Prod. | Chloroform | secondary | 1.91e-06 | 2.52e-11 |
| Natural Gas Prod. | Chloroform | secondary | 1.06e-06 | 1.39e-11 |
| Fuel Oil #4 Prod. | Dichloromethane | secondary | 1.02e-06 | 1.34e-11 |
| Fuel Oil #4 Prod. | Chloroform | secondary | 2.04e-07 | 2.69e-12 |
| **Total Manufacturing** | | | **7.41e+06** | **9.78e+01** |
| **Use, Maintenance and Repair Life-cycle Stage** | | | | |
| US electric grid | Acetaldehyde | model/secondary | 1.90e+05 | 2.50e+00 |
| US electric grid | Propionaldehyde | model/secondary | 9.76e+03 | 1.29e-01 |
| US electric grid | Acrolein | model/secondary | 3.78e+02 | 4.99e-03 |
| US electric grid | Benzyl chloride | model/secondary | 3.00e+02 | 3.96e-03 |
| US electric grid | Formaldehyde | model/secondary | 1.73e+02 | 2.29e-03 |
| US electric grid | Carbon disulfide | model/secondary | 6.49e+01 | 8.57e-04 |
| US electric grid | Methyl ethyl ketone | model/secondary | 5.16e+01 | 6.81e-04 |
| US electric grid | Isophorone | model/secondary | 4.74e+01 | 6.26e-04 |
| US electric grid | Toluene | model/secondary | 4.25e+01 | 5.61e-04 |
| US electric grid | Phenol | model/secondary | 3.69e+01 | 4.87e-04 |
| US electric grid | Styrene | model/secondary | 3.30e+01 | 4.36e-04 |
| US electric grid | Cumene | model/secondary | 1.19e+01 | 1.57e-04 |
| US electric grid | Naphthalene | model/secondary | 9.16e+00 | 1.21e-04 |
| US electric grid | Methyl methacrylate | model/secondary | 8.99e+00 | 1.19e-04 |
| US electric grid | Methyl hydrazine | model/secondary | 8.04e+00 | 1.06e-04 |
| US electric grid | 2-Chloroacetophenone | model/secondary | 6.29e+00 | 8.31e-05 |

## Table M-35. CRT LCIA Results for the Aesthetics Impacts Category

| Process Group | Material | LCI Data Type | Odor (m3) | % of Total |
|---|---|---|---|---|
| US electric grid | Xylene (mixed isomers) | model/secondary | 5.45e+00 | 7.20e-05 |
| US electric grid | Chlorobenzene | model/secondary | 1.98e+00 | 2.61e-05 |
| US electric grid | Vinyl acetate | model/secondary | 1.71e+00 | 2.25e-05 |
| US electric grid | Benzene | model/secondary | 1.08e+00 | 1.43e-05 |
| US electric grid | Acetophenone | model/secondary | 8.99e-01 | 1.19e-05 |
| US electric grid | Tetrachloroethylene | model/secondary | 4.66e-01 | 6.15e-06 |
| US electric grid | 1,1,1-Trichloroethane | model/secondary | 3.63e-01 | 4.79e-06 |
| US electric grid | 1,2-Dichloroethane | model/secondary | 1.44e-01 | 1.90e-06 |
| US electric grid | o-xylene | model/secondary | 7.33e-02 | 9.68e-07 |
| US electric grid | Dichloromethane | model/secondary | 4.07e-02 | 5.38e-07 |
| US electric grid | Chloroform | model/secondary | 8.16e-03 | 1.08e-07 |
| **Total Use, Maintenance and Repair** | | | **2.01e+05** | **2.65e+00** |
| **End-of-life Life-cycle Stage** | | | | |
| CRT landfilling | Hydrogen sulfide | primary | 5.37e+02 | 7.09e-03 |
| LPG Production | Hydrogen sulfide | secondary | 6.17e+01 | 8.14e-04 |
| US electric grid | Acetaldehyde | model/secondary | 1.90e+01 | 2.51e-04 |
| US electric grid | Propionaldehyde | model/secondary | 9.76e-01 | 1.29e-05 |
| LPG Production | Acetaldehyde | secondary | 1.22e-01 | 1.61e-06 |
| CRT landfilling | Toluene | primary | 7.98e-02 | 1.05e-06 |
| CRT landfilling | Xylene (mixed isomers) | primary | 4.07e-02 | 5.37e-07 |
| US electric grid | Acrolein | model/secondary | 3.78e-02 | 4.99e-07 |
| US electric grid | Benzyl chloride | model/secondary | 3.00e-02 | 3.96e-07 |
| LPG Production | Formaldehyde | secondary | 2.07e-02 | 2.73e-07 |
| LPG Production | Ammonia | secondary | 1.88e-02 | 2.49e-07 |
| US electric grid | Formaldehyde | model/secondary | 1.73e-02 | 2.29e-07 |
| US electric grid | Carbon disulfide | model/secondary | 6.50e-03 | 8.57e-08 |
| LPG Production | Propionaldehyde | secondary | 6.28e-03 | 8.30e-08 |
| CRT landfilling | Benzene | primary | 6.28e-03 | 8.29e-08 |
| US electric grid | Methyl ethyl ketone | model/secondary | 5.16e-03 | 6.81e-08 |
| US electric grid | Isophorone | model/secondary | 4.74e-03 | 6.26e-08 |
| US electric grid | Toluene | model/secondary | 4.25e-03 | 5.61e-08 |
| US electric grid | Phenol | model/secondary | 3.69e-03 | 4.87e-08 |
| US electric grid | Styrene | model/secondary | 3.31e-03 | 4.36e-08 |
| US electric grid | Cumene | model/secondary | 1.19e-03 | 1.57e-08 |
| LPG Production | Benzene | secondary | 1.15e-03 | 1.52e-08 |
| US electric grid | Naphthalene | model/secondary | 9.17e-04 | 1.21e-08 |
| US electric grid | Methyl methacrylate | model/secondary | 8.99e-04 | 1.19e-08 |
| US electric grid | Methyl hydrazine | model/secondary | 8.05e-04 | 1.06e-08 |
| US electric grid | 2-Chloroacetophenone | model/secondary | 6.30e-04 | 8.31e-09 |
| US electric grid | Xylene (mixed isomers) | model/secondary | 5.45e-04 | 7.20e-09 |
| CRT Incineration | Trichloroethylene | secondary | 3.77e-04 | 4.98e-09 |
| CRT landfilling | Trichloroethylene | primary | 3.52e-04 | 4.64e-09 |
| LPG Production | Acrolein | secondary | 2.43e-04 | 3.21e-09 |
| US electric grid | Chlorobenzene | model/secondary | 1.98e-04 | 2.61e-09 |
| LPG Production | Benzyl chloride | secondary | 1.93e-04 | 2.55e-09 |
| US electric grid | Vinyl acetate | model/secondary | 1.71e-04 | 2.26e-09 |
| CRT landfilling | Tetrachloroethylene | primary | 1.65e-04 | 2.18e-09 |
| US electric grid | Benzene | model/secondary | 1.08e-04 | 1.43e-09 |
| US electric grid | Acetophenone | model/secondary | 8.99e-05 | 1.19e-09 |
| CRT landfilling | 1,2-Dichloroethane | primary | 5.49e-05 | 7.25e-10 |

## Table M-35. CRT LCIA Results for the Aesthetics Impacts Category

| Process Group | Material | LCI Data Type | Odor (m3) | % of Total |
|---|---|---|---|---|
| LPG Production | Toluene | secondary | 5.36e-05 | 7.07e-10 |
| US electric grid | Tetrachloroethylene | model/secondary | 4.66e-05 | 6.15e-10 |
| LPG Production | Carbon disulfide | secondary | 4.18e-05 | 5.52e-10 |
| US electric grid | 1,1,1-Trichloroethane | model/secondary | 3.63e-05 | 4.79e-10 |
| LPG Production | Methyl ethyl ketone | secondary | 3.32e-05 | 4.38e-10 |
| LPG Production | Isophorone | secondary | 3.05e-05 | 4.03e-10 |
| LPG Production | Phenol | secondary | 2.37e-05 | 3.13e-10 |
| LPG Production | Styrene | secondary | 2.13e-05 | 2.81e-10 |
| LPG Production | Naphthalene | secondary | 1.51e-05 | 1.99e-10 |
| US electric grid | 1,2-Dichloroethane | model/secondary | 1.44e-05 | 1.90e-10 |
| LPG Production | o-xylene | secondary | 1.14e-05 | 1.51e-10 |
| LPG Production | Cumene | secondary | 7.67e-06 | 1.01e-10 |
| US electric grid | o-xylene | model/secondary | 7.34e-06 | 9.69e-11 |
| LPG Production | Methyl methacrylate | secondary | 5.79e-06 | 7.64e-11 |
| LPG Production | Methyl hydrazine | secondary | 5.18e-06 | 6.84e-11 |
| US electric grid | Dichloromethane | model/secondary | 4.08e-06 | 5.38e-11 |
| LPG Production | 2-Chloroacetophenone | secondary | 4.05e-06 | 5.35e-11 |
| LPG Production | 1,4-Dichlorobenzene | secondary | 3.56e-06 | 4.70e-11 |
| CRT landfilling | Dichloromethane | primary | 3.43e-06 | 4.52e-11 |
| CRT landfilling | Chloroform | primary | 2.11e-06 | 2.79e-11 |
| CRT Incineration | Carbon tetrachloride | secondary | 1.66e-06 | 2.20e-11 |
| CRT landfilling | Carbon tetrachloride | primary | 1.55e-06 | 2.05e-11 |
| LPG Production | Chlorobenzene | secondary | 1.27e-06 | 1.68e-11 |
| LPG Production | Vinyl acetate | secondary | 1.10e-06 | 1.45e-11 |
| US electric grid | Chloroform | model/secondary | 8.16e-07 | 1.08e-11 |
| LPG Production | Acetophenone | secondary | 5.79e-07 | 7.64e-12 |
| LPG Production | Tetrachloroethylene | secondary | 3.00e-07 | 3.96e-12 |
| LPG Production | 1,1,1-Trichloroethane | secondary | 2.18e-07 | 2.88e-12 |
| LPG Production | Chlorine | secondary | 2.00e-07 | 2.64e-12 |
| LPG Production | 1,2-Dichloroethane | secondary | 9.26e-08 | 1.22e-12 |
| LPG Production | Dichloromethane | secondary | 2.62e-08 | 3.46e-13 |
| LPG Production | Chloroform | secondary | 5.25e-09 | 6.94e-14 |
| Natural Gas Prod. | Chloroform | secondary | -5.29e-07 | -6.99e-12 |
| Fuel Oil #4 Prod. | Chloroform | secondary | -2.19e-06 | -2.89e-11 |
| Natural Gas Prod. | Dichloromethane | secondary | -2.64e-06 | -3.49e-11 |
| Natural Gas Prod. | 1,2-Dichloroethane | secondary | -9.33e-06 | -1.23e-10 |
| Fuel Oil #4 Prod. | Dichloromethane | secondary | -1.09e-05 | -1.44e-10 |
| Natural Gas Prod. | 1,1,1-Trichloroethane | secondary | -2.20e-05 | -2.91e-10 |
| Natural Gas Prod. | Tetrachloroethylene | secondary | -3.02e-05 | -3.99e-10 |
| Fuel Oil #4 Prod. | 1,2-Dichloroethane | secondary | -3.86e-05 | -5.09e-10 |
| Natural Gas Prod. | Acetophenone | secondary | -5.83e-05 | -7.70e-10 |
| Fuel Oil #4 Prod. | Chlorine | secondary | -6.88e-05 | -9.08e-10 |
| CRT Incineration | Chlorine | secondary | -8.44e-05 | -1.11e-09 |
| Fuel Oil #4 Prod. | 1,1,1-Trichloroethane | secondary | -9.10e-05 | -1.20e-09 |
| Natural Gas Prod. | Vinyl acetate | secondary | -1.11e-04 | -1.46e-09 |
| Fuel Oil #4 Prod. | Tetrachloroethylene | secondary | -1.25e-04 | -1.65e-09 |
| Natural Gas Prod. | Chlorobenzene | secondary | -1.28e-04 | -1.69e-09 |
| CRT Incineration | Chloroform | secondary | -1.33e-04 | -1.76e-09 |
| Fuel Oil #4 Prod. | Acetophenone | secondary | -2.41e-04 | -3.18e-09 |
| Natural Gas Prod. | 2-Chloroacetophenone | secondary | -4.08e-04 | -5.39e-09 |
| Fuel Oil #4 Prod. | Vinyl acetate | secondary | -4.58e-04 | -6.05e-09 |

## Table M-35. CRT LCIA Results for the Aesthetics Impacts Category

| Process Group | Material | LCI Data Type | Odor (m3) | % of Total |
|---|---|---|---|---|
| Natural Gas Prod. | Methyl hydrazine | secondary | -5.22e-04 | -6.89e-09 |
| Fuel Oil #4 Prod. | Chlorobenzene | secondary | -5.31e-04 | -7.00e-09 |
| Natural Gas Prod. | Methyl methacrylate | secondary | -5.83e-04 | -7.70e-09 |
| CRT Incineration | Dichloromethane | secondary | -6.72e-04 | -8.87e-09 |
| Natural Gas Prod. | Cumene | secondary | -7.73e-04 | -1.02e-08 |
| Natural Gas Prod. | Chlorine | secondary | -1.03e-03 | -1.37e-08 |
| Fuel Oil #4 Prod. | 1,4-Dichlorobenzene | secondary | -1.25e-03 | -1.64e-08 |
| Fuel Oil #4 Prod. | 2-Chloroacetophenone | secondary | -1.69e-03 | -2.23e-08 |
| Natural Gas Prod. | 1,4-Dichlorobenzene | secondary | -1.86e-03 | -2.46e-08 |
| Natural Gas Prod. | Styrene | secondary | -2.14e-03 | -2.83e-08 |
| Fuel Oil #4 Prod. | Methyl hydrazine | secondary | -2.16e-03 | -2.85e-08 |
| CRT Incineration | 1,2-Dichloroethane | secondary | -2.33e-03 | -3.07e-08 |
| Natural Gas Prod. | Phenol | secondary | -2.39e-03 | -3.16e-08 |
| Fuel Oil #4 Prod. | Methyl methacrylate | secondary | -2.41e-03 | -3.18e-08 |
| Natural Gas Prod. | Isophorone | secondary | -3.08e-03 | -4.06e-08 |
| Fuel Oil #4 Prod. | Cumene | secondary | -3.20e-03 | -4.22e-08 |
| Natural Gas Prod. | Methyl ethyl ketone | secondary | -3.35e-03 | -4.42e-08 |
| Fuel Oil #4 Prod. | o-xylene | secondary | -4.18e-03 | -5.52e-08 |
| Natural Gas Prod. | Carbon disulfide | secondary | -4.21e-03 | -5.56e-08 |
| Natural Gas Prod. | Naphthalene | secondary | -4.43e-03 | -5.84e-08 |
| Fuel Oil #4 Prod. | Naphthalene | secondary | -5.43e-03 | -7.17e-08 |
| CRT Incineration | 1,1,1-Trichloroethane | secondary | -5.62e-03 | -7.42e-08 |
| CRT Incineration | Tetrachloroethylene | secondary | -7.54e-03 | -9.96e-08 |
| Fuel Oil #4 Prod. | Styrene | secondary | -8.87e-03 | -1.17e-07 |
| Fuel Oil #4 Prod. | Phenol | secondary | -9.89e-03 | -1.31e-07 |
| Fuel Oil #4 Prod. | Isophorone | secondary | -1.27e-02 | -1.68e-07 |
| Fuel Oil #4 Prod. | Methyl ethyl ketone | secondary | -1.38e-02 | -1.83e-07 |
| CRT Incineration | Acetophenone | secondary | -1.49e-02 | -1.97e-07 |
| Fuel Oil #4 Prod. | Carbon disulfide | secondary | -1.74e-02 | -2.30e-07 |
| Natural Gas Prod. | Benzyl chloride | secondary | -1.94e-02 | -2.57e-07 |
| Fuel Oil #4 Prod. | Toluene | secondary | -2.03e-02 | -2.68e-07 |
| Natural Gas Prod. | Acrolein | secondary | -2.45e-02 | -3.24e-07 |
| CRT Incineration | Vinyl acetate | secondary | -2.83e-02 | -3.74e-07 |
| CRT Incineration | Chlorobenzene | secondary | -3.28e-02 | -4.33e-07 |
| Natural Gas Prod. | Toluene | secondary | -4.33e-02 | -5.71e-07 |
| Natural Gas Prod. | o-xylene | secondary | -4.46e-02 | -5.89e-07 |
| CRT Incineration | Xylene (mixed isomers) | secondary | -5.26e-02 | -6.95e-07 |
| Fuel Oil #4 Prod. | Benzyl chloride | secondary | -8.04e-02 | -1.06e-06 |
| Fuel Oil #4 Prod. | Acrolein | secondary | -1.01e-01 | -1.34e-06 |
| CRT Incineration | Methyl hydrazine | secondary | -1.33e-01 | -1.76e-06 |
| CRT Incineration | Naphthalene | secondary | -1.38e-01 | -1.82e-06 |
| CRT Incineration | Methyl methacrylate | secondary | -1.49e-01 | -1.97e-06 |
| CRT Incineration | Cumene | secondary | -1.97e-01 | -2.61e-06 |
| Natural Gas Prod. | Formaldehyde | secondary | -2.48e-01 | -3.28e-06 |
| Fuel Oil #4 Prod. | Benzene | secondary | -4.02e-01 | -5.31e-06 |
| CRT Incineration | Benzene | secondary | -4.93e-01 | -6.51e-06 |
| CRT Incineration | Styrene | secondary | -5.48e-01 | -7.23e-06 |
| CRT Incineration | Phenol | secondary | -6.11e-01 | -8.07e-06 |
| Natural Gas Prod. | Propionaldehyde | secondary | -6.33e-01 | -8.36e-06 |
| CRT Incineration | Toluene | secondary | -6.67e-01 | -8.81e-06 |
| CRT Incineration | Isophorone | secondary | -7.86e-01 | -1.04e-05 |

## Table M-35. CRT LCIA Results for the Aesthetics Impacts Category

| Process Group | Material | LCI Data Type | Odor (m3) | % of Total |
|---|---|---|---|---|
| CRT Incineration | Methyl ethyl ketone | secondary | -8.55e-01 | -1.13e-05 |
| CRT Incineration | Carbon disulfide | secondary | -1.08e+00 | -1.42e-05 |
| Fuel Oil #4 Prod. | Propionaldehyde | secondary | -2.62e+00 | -3.46e-05 |
| CRT Incineration | Benzyl chloride | secondary | -4.97e+00 | -6.56e-05 |
| Natural Gas Prod. | Benzene | secondary | -5.89e+00 | -7.78e-05 |
| CRT Incineration | Acrolein | secondary | -6.26e+00 | -8.27e-05 |
| Fuel Oil #4 Prod. | Ammonia | secondary | -6.41e+00 | -8.47e-05 |
| CRT Incineration | Formaldehyde | secondary | -7.98e+00 | -1.05e-04 |
| Fuel Oil #4 Prod. | Formaldehyde | secondary | -9.86e+00 | -1.30e-04 |
| Natural Gas Prod. | Acetaldehyde | secondary | -1.23e+01 | -1.63e-04 |
| CRT Incineration | Ammonia | secondary | -2.08e+01 | -2.75e-04 |
| Fuel Oil #4 Prod. | Acetaldehyde | secondary | -5.09e+01 | -6.72e-04 |
| Natural Gas Prod. | Hydrogen sulfide | secondary | -7.86e+01 | -1.04e-03 |
| Natural Gas Prod. | Ammonia | secondary | -7.87e+01 | -1.04e-03 |
| CRT Incineration | Propionaldehyde | secondary | -1.62e+02 | -2.14e-03 |
| CRT Incineration | Hydrogen sulfide | secondary | -1.42e+03 | -1.88e-02 |
| CRT Incineration | Acetaldehyde | secondary | | -4.15e-02 |
| Fuel Oil #4 Prod. | Hydrogen sulfide | secondary | -2.97e+04 | -3.92e-01 |
| **Total End-of-life** | | | **-3.41e+04** | **-4.50e-01** |
| **Total All Life-cycle Stages** | | | **7.58e+06** | **1.00e+02** |

## Table M-36. LCD LCIA Results for the Aesthetics Impact Category

| Process Group | Material | LCI Data Type | Odor (m3) | % of Total |
|---|---|---|---|---|
| **Materials Processing Life-cycle Stage** | | | | |
| Steel Prod., cold-rolled, semi-finished | Hydrogen sulfide | secondary | 1.55e+04 | 3.08e-01 |
| Natural Gas Prod. | Ammonia | secondary | 1.10e+04 | 2.17e-01 |
| Natural Gas Prod. | Hydrogen sulfide | secondary | 1.10e+04 | 2.17e-01 |
| Polycarbonate Production | Ethanethiol | secondary | 5.87e+03 | 1.16e-01 |
| PMMA Sheet Prod. | Ethanethiol | secondary | 4.37e+03 | 8.66e-02 |
| PMMA Sheet Prod. | Hydrogen sulfide | secondary | 3.58e+03 | 7.09e-02 |
| Aluminum Prod. | Hydrogen sulfide | secondary | 3.27e+03 | 6.48e-02 |
| Polycarbonate Production | Hydrogen sulfide | secondary | 2.40e+03 | 4.77e-02 |
| Natural Gas Prod. | Acetaldehyde | secondary | 1.72e+03 | 3.40e-02 |
| Steel Prod., cold-rolled, semi-finished | Acetaldehyde | secondary | 1.22e+03 | 2.41e-02 |
| Natural Gas Prod. | Benzene | secondary | 8.21e+02 | 1.63e-02 |
| PET Resin Production | Hydrogen sulfide | secondary | 2.12e+02 | 4.19e-03 |
| Styrene-butadiene Copolymer Prod. | Hydrogen sulfide | secondary | 2.11e+02 | 4.18e-03 |
| Steel Prod., cold-rolled, semi-finished | Ammonia | secondary | 2.03e+02 | 4.03e-03 |
| Natural Gas Prod. | Propionaldehyde | secondary | 8.82e+01 | 1.75e-03 |
| Aluminum Prod. | Acetic acid | secondary | 4.23e+01 | 8.38e-04 |
| Natural Gas Prod. | Formaldehyde | secondary | 3.46e+01 | 6.85e-04 |
| Steel Prod., cold-rolled, semi-finished | Acetic acid | secondary | 2.70e+01 | 5.35e-04 |
| Steel Prod., cold-rolled, semi-finished | Phenol | secondary | 2.36e+01 | 4.69e-04 |
| Aluminum Prod. | Xylene (mixed isomers) | secondary | 1.13e+01 | 2.24e-04 |
| PMMA Sheet Prod. | Ammonia | secondary | 8.07e+00 | 1.60e-04 |
| Steel Prod., cold-rolled, semi-finished | Toluene | secondary | 6.35e+00 | 1.26e-04 |
| Natural Gas Prod. | o-xylene | secondary | 6.21e+00 | 1.23e-04 |
| Natural Gas Prod. | Toluene | secondary | 6.03e+00 | 1.19e-04 |
| Aluminum Prod. | Toluene | secondary | 5.16e+00 | 1.02e-04 |
| Steel Prod., cold-rolled, semi-finished | Xylene (mixed isomers) | secondary | 4.40e+00 | 8.73e-05 |
| Steel Prod., cold-rolled, semi-finished | Formaldehyde | secondary | 3.63e+00 | 7.20e-05 |
| Natural Gas Prod. | Acrolein | secondary | 3.41e+00 | 6.77e-05 |
| Aluminum Prod. | Ammonia | secondary | 3.36e+00 | 6.66e-05 |
| Natural Gas Prod. | Benzyl chloride | secondary | 2.71e+00 | 5.37e-05 |
| Polycarbonate Production | Chlorine | secondary | 1.12e+00 | 2.23e-05 |
| Steel Prod., cold-rolled, semi-finished | Ethanol | secondary | 1.02e+00 | 2.02e-05 |
| PMMA Sheet Prod. | Chlorine | secondary | 8.36e-01 | 1.66e-05 |
| Natural Gas Prod. | Naphthalene | secondary | 6.17e-01 | 1.22e-05 |
| Natural Gas Prod. | Carbon disulfide | secondary | 5.87e-01 | 1.16e-05 |
| Natural Gas Prod. | Methyl ethyl ketone | secondary | 4.66e-01 | 9.24e-06 |
| Natural Gas Prod. | Isophorone | secondary | 4.28e-01 | 8.50e-06 |
| PET Resin Production | Chlorine | secondary | 3.95e-01 | 7.84e-06 |
| Styrene-butadiene Copolymer Prod. | Chlorine | secondary | 3.94e-01 | 7.81e-06 |
| Natural Gas Prod. | Phenol | secondary | 3.33e-01 | 6.61e-06 |
| Natural Gas Prod. | Styrene | secondary | 2.99e-01 | 5.92e-06 |
| Natural Gas Prod. | 1,4-Dichlorobenzene | secondary | 2.59e-01 | 5.14e-06 |
| Steel Prod., cold-rolled, semi-finished | Methanol | secondary | 2.02e-01 | 4.00e-06 |
| Natural Gas Prod. | Chlorine | secondary | 1.44e-01 | 2.86e-06 |
| Steel Prod., cold-rolled, semi-finished | Benzene | secondary | 1.27e-01 | 2.51e-06 |
| Natural Gas Prod. | Cumene | secondary | 1.08e-01 | 2.13e-06 |
| PET Resin Production | Ammonia | secondary | 9.10e-02 | 1.80e-06 |
| Styrene-butadiene Copolymer Prod. | Ammonia | secondary | 9.06e-02 | 1.80e-06 |
| Natural Gas Prod. | Methyl methacrylate | secondary | 8.13e-02 | 1.61e-06 |

## Table M-36. LCD LCIA Results for the Aesthetics Impact Category

| Process Group | Material | LCI Data Type | Odor (m3) | % of Total |
|---|---|---|---|---|
| Natural Gas Prod. | Methyl hydrazine | secondary | 7.27e-02 | 1.44e-06 |
| Natural Gas Prod. | 2-Chloroacetophenone | secondary | 5.69e-02 | 1.13e-06 |
| Aluminum Prod. | Phenol | secondary | 3.82e-02 | 7.58e-07 |
| Steel Prod., cold-rolled, semi-finished | Naphthalene | secondary | 3.65e-02 | 7.24e-07 |
| Aluminum Prod. | Benzene | secondary | 2.23e-02 | 4.43e-07 |
| Natural Gas Prod. | Chlorobenzene | secondary | 1.79e-02 | 3.54e-07 |
| Natural Gas Prod. | Vinyl acetate | secondary | 1.54e-02 | 3.06e-07 |
| Natural Gas Prod. | Acetophenone | secondary | 8.13e-03 | 1.61e-07 |
| Steel Prod., cold-rolled, semi-finished | Acetone | secondary | 4.53e-03 | 8.99e-08 |
| Natural Gas Prod. | Tetrachloroethylene | secondary | 4.21e-03 | 8.35e-08 |
| Natural Gas Prod. | 1,1,1-Trichloroethane | secondary | 3.07e-03 | 6.08e-08 |
| Natural Gas Prod. | 1,2-Dichloroethane | secondary | 1.30e-03 | 2.58e-08 |
| Natural Gas Prod. | Dichloromethane | secondary | 3.68e-04 | 7.30e-09 |
| Steel Prod., cold-rolled, semi-finished | Isopropylpropionate | secondary | 3.10e-04 | 6.16e-09 |
| Natural Gas Prod. | Chloroform | secondary | 7.38e-05 | 1.46e-09 |
| Steel Prod., cold-rolled, semi-finished | Chlorine | secondary | 3.98e-05 | 7.90e-10 |
| Steel Prod., cold-rolled, semi-finished | Propionaldehyde | secondary | 2.17e-05 | 4.31e-10 |
| **Total Materials Processing** | | | **6.16e+04** | **1.22e+00** |
| **Manufacturing Life-cycle Stage** | | | | |
| Monitor/module | Phosphine | primary | 4.48e+06 | 8.89e+01 |
| LPG Production | Hydrogen sulfide | secondary | 3.43e+05 | 6.80e+00 |
| Monitor/module | Ammonia | primary | 6.24e+04 | 1.24e+00 |
| Monitor/module | Acetic acid | primary | 2.23e+04 | 4.42e-01 |
| Japanese Electric Grid | Acetaldehyde | model/secondary | 8.13e+03 | 1.61e-01 |
| Fuel Oil #4 Prod. | Hydrogen sulfide | secondary | 4.26e+03 | 8.44e-02 |
| Fuel Oil #6 Prod. | Hydrogen sulfide | secondary | 2.52e+03 | 5.00e-02 |
| Fuel Oil #2 Prod. | Hydrogen sulfide | secondary | 1.10e+03 | 2.18e-02 |
| LPG Production | Acetaldehyde | secondary | 6.79e+02 | 1.35e-02 |
| Japanese Electric Grid | Propionaldehyde | model/secondary | 4.18e+02 | 8.30e-03 |
| US electric grid | Acetaldehyde | model/secondary | 3.67e+02 | 7.29e-03 |
| Natural Gas Prod. | Ammonia | secondary | 2.47e+02 | 4.91e-03 |
| Natural Gas Prod. | Hydrogen sulfide | secondary | 2.47e+02 | 4.90e-03 |
| LPG Production | Formaldehyde | secondary | 1.15e+02 | 2.28e-03 |
| LPG Production | Ammonia | secondary | 1.05e+02 | 2.08e-03 |
| Panel components | Toluene | primary | 9.09e+01 | 1.80e-03 |
| Backlight | Ethanol | primary | 7.24e+01 | 1.44e-03 |
| Japanese Electric Grid | Formaldehyde | model/secondary | 7.02e+01 | 1.39e-03 |
| Natural Gas Prod. | Acetaldehyde | secondary | 3.87e+01 | 7.68e-04 |
| PWB Mfg. | Formaldehyde | model/secondary | 3.50e+01 | 6.94e-04 |
| LPG Production | Propionaldehyde | secondary | 3.49e+01 | 6.93e-04 |
| US electric grid | Propionaldehyde | model/secondary | 1.89e+01 | 3.75e-04 |
| Natural Gas Prod. | Benzene | secondary | 1.85e+01 | 3.67e-04 |
| Japanese Electric Grid | Acrolein | model/secondary | 1.62e+01 | 3.21e-04 |
| Japanese Electric Grid | Benzyl chloride | model/secondary | 1.28e+01 | 2.55e-04 |
| Japanese Electric Grid | Toluene | model/secondary | 8.03e+00 | 1.59e-04 |
| Fuel Oil #4 Prod. | Acetaldehyde | secondary | 7.30e+00 | 1.45e-04 |
| LPG Production | Benzene | secondary | 6.39e+00 | 1.27e-04 |
| Fuel Oil #6 Prod. | Acetaldehyde | secondary | 3.89e+00 | 7.71e-05 |
| Japanese Electric Grid | Naphthalene | model/secondary | 3.73e+00 | 7.39e-05 |
| Japanese Electric Grid | Carbon disulfide | model/secondary | 2.78e+00 | 5.52e-05 |
| Monitor/module | Acetone | primary | 2.59e+00 | 5.14e-05 |

# Table M-36. LCD LCIA Results for the Aesthetics Impact Category

| Process Group | Material | LCI Data Type | Odor (m3) | % of Total |
|---|---|---|---|---|
| Japanese Electric Grid | Methyl ethyl ketone | model/secondary | 2.21e+00 | 4.38e-05 |
| Fuel Oil #2 Prod. | Acetaldehyde | secondary | 2.07e+00 | 4.11e-05 |
| Japanese Electric Grid | Isophorone | model/secondary | 2.03e+00 | 4.03e-05 |
| Natural Gas Prod. | Propionaldehyde | secondary | 1.99e+00 | 3.95e-05 |
| Japanese Electric Grid | Phenol | model/secondary | 1.58e+00 | 3.13e-05 |
| Japanese Electric Grid | Styrene | model/secondary | 1.42e+00 | 2.81e-05 |
| Fuel Oil #4 Prod. | Formaldehyde | secondary | 1.41e+00 | 2.80e-05 |
| LPG Production | Acrolein | secondary | 1.35e+00 | 2.68e-05 |
| Panel components | Methyl ethyl ketone | primary | 1.08e+00 | 2.14e-05 |
| LPG Production | Benzyl chloride | secondary | 1.07e+00 | 2.13e-05 |
| Fuel Oil #4 Prod. | Ammonia | secondary | 9.19e-01 | 1.82e-05 |
| Fuel Oil #6 Prod. | Formaldehyde | secondary | 8.33e-01 | 1.65e-05 |
| Natural Gas Prod. | Formaldehyde | secondary | 7.80e-01 | 1.55e-05 |
| US electric grid | Acrolein | model/secondary | 7.31e-01 | 1.45e-05 |
| US electric grid | Benzyl chloride | model/secondary | 5.80e-01 | 1.15e-05 |
| Fuel Oil #6 Prod. | Ammonia | secondary | 4.00e-01 | 7.93e-06 |
| Japanese Electric Grid | Methyl methacrylate | model/secondary | 3.85e-01 | 7.64e-06 |
| Fuel Oil #4 Prod. | Propionaldehyde | secondary | 3.75e-01 | 7.44e-06 |
| Fuel Oil #2 Prod. | Formaldehyde | secondary | 3.67e-01 | 7.29e-06 |
| Japanese Electric Grid | Methyl hydrazine | model/secondary | 3.45e-01 | 6.84e-06 |
| US electric grid | Formaldehyde | model/secondary | 3.35e-01 | 6.65e-06 |
| Fuel Oil #2 Prod. | Ammonia | secondary | 3.00e-01 | 5.95e-06 |
| LPG Production | Toluene | secondary | 2.98e-01 | 5.91e-06 |
| Japanese Electric Grid | 2-Chloroacetophenone | model/secondary | 2.70e-01 | 5.35e-06 |
| Japanese Electric Grid | Xylene (mixed isomers) | model/secondary | 2.34e-01 | 4.63e-06 |
| LPG Production | Carbon disulfide | secondary | 2.32e-01 | 4.61e-06 |
| Fuel Oil #6 Prod. | Propionaldehyde | secondary | 2.00e-01 | 3.97e-06 |
| LPG Production | Methyl ethyl ketone | secondary | 1.85e-01 | 3.66e-06 |
| LPG Production | Isophorone | secondary | 1.70e-01 | 3.36e-06 |
| Natural Gas Prod. | o-xylene | secondary | 1.40e-01 | 2.78e-06 |
| Natural Gas Prod. | Toluene | secondary | 1.36e-01 | 2.70e-06 |
| LPG Production | Phenol | secondary | 1.32e-01 | 2.62e-06 |
| US electric grid | Carbon disulfide | model/secondary | 1.26e-01 | 2.49e-06 |
| LPG Production | Styrene | secondary | 1.18e-01 | 2.35e-06 |
| Fuel Oil #2 Prod. | Propionaldehyde | secondary | 1.07e-01 | 2.11e-06 |
| US electric grid | Methyl ethyl ketone | model/secondary | 9.98e-02 | 1.98e-06 |
| US electric grid | Isophorone | model/secondary | 9.18e-02 | 1.82e-06 |
| Japanese Electric Grid | Chlorobenzene | model/secondary | 8.48e-02 | 1.68e-06 |
| LPG Production | Naphthalene | secondary | 8.39e-02 | 1.66e-06 |
| Japanese Electric Grid | o-xylene | model/secondary | 8.34e-02 | 1.65e-06 |
| US electric grid | Toluene | model/secondary | 8.22e-02 | 1.63e-06 |
| Natural Gas Prod. | Acrolein | secondary | 7.71e-02 | 1.53e-06 |
| Japanese Electric Grid | Vinyl acetate | model/secondary | 7.31e-02 | 1.45e-06 |
| US electric grid | Phenol | model/secondary | 7.14e-02 | 1.42e-06 |
| US electric grid | Styrene | model/secondary | 6.40e-02 | 1.27e-06 |
| LPG Production | o-xylene | secondary | 6.36e-02 | 1.26e-06 |
| Natural Gas Prod. | Benzyl chloride | secondary | 6.11e-02 | 1.21e-06 |
| Panel components | Ethylacetate | primary | 5.82e-02 | 1.15e-06 |
| Fuel Oil #4 Prod. | Benzene | secondary | 5.77e-02 | 1.14e-06 |
| Japanese Electric Grid | Benzene | model/secondary | 4.76e-02 | 9.43e-07 |
| LPG Production | Cumene | secondary | 4.26e-02 | 8.45e-07 |

## Table M-36. LCD LCIA Results for the Aesthetics Impact Category

| Process Group | Material | LCI Data Type | Odor (m3) | % of Total |
|---|---|---|---|---|
| Japanese Electric Grid | 1,1,1-Trichloroethane | model/secondary | 4.11e-02 | 8.15e-07 |
| Japanese Electric Grid | Acetophenone | model/secondary | 3.85e-02 | 7.64e-07 |
| LPG Production | Methyl methacrylate | secondary | 3.22e-02 | 6.38e-07 |
| LPG Production | Methyl hydrazine | secondary | 2.88e-02 | 5.71e-07 |
| Fuel Oil #6 Prod. | Benzene | secondary | 2.59e-02 | 5.13e-07 |
| US electric grid | Cumene | model/secondary | 2.31e-02 | 4.57e-07 |
| LPG Production | 2-Chloroacetophenone | secondary | 2.25e-02 | 4.47e-07 |
| Japanese Electric Grid | Tetrachloroethylene | model/secondary | 2.00e-02 | 3.96e-07 |
| LPG Production | 1,4-Dichlorobenzene | secondary | 1.98e-02 | 3.92e-07 |
| Fuel Oil #2 Prod. | Benzene | secondary | 1.85e-02 | 3.66e-07 |
| US electric grid | Naphthalene | model/secondary | 1.77e-02 | 3.52e-07 |
| US electric grid | Methyl methacrylate | model/secondary | 1.74e-02 | 3.45e-07 |
| US electric grid | Methyl hydrazine | model/secondary | 1.56e-02 | 3.09e-07 |
| Fuel Oil #4 Prod. | Acrolein | secondary | 1.45e-02 | 2.88e-07 |
| Natural Gas Prod. | Naphthalene | secondary | 1.39e-02 | 2.76e-07 |
| Natural Gas Prod. | Carbon disulfide | secondary | 1.32e-02 | 2.63e-07 |
| US electric grid | 2-Chloroacetophenone | model/secondary | 1.22e-02 | 2.42e-07 |
| Fuel Oil #4 Prod. | Benzyl chloride | secondary | 1.15e-02 | 2.28e-07 |
| US electric grid | Xylene (mixed isomers) | model/secondary | 1.06e-02 | 2.09e-07 |
| Natural Gas Prod. | Methyl ethyl ketone | secondary | 1.05e-02 | 2.09e-07 |
| Natural Gas Prod. | Isophorone | secondary | 9.67e-03 | 1.92e-07 |
| Fuel Oil #6 Prod. | Acrolein | secondary | 7.74e-03 | 1.54e-07 |
| Natural Gas Prod. | Phenol | secondary | 7.52e-03 | 1.49e-07 |
| LPG Production | Chlorobenzene | secondary | 7.08e-03 | 1.40e-07 |
| Natural Gas Prod. | Styrene | secondary | 6.74e-03 | 1.34e-07 |
| Japanese Electric Grid | 1,2-Dichloroethane | model/secondary | 6.17e-03 | 1.22e-07 |
| Fuel Oil #6 Prod. | Benzyl chloride | secondary | 6.14e-03 | 1.22e-07 |
| LPG Production | Vinyl acetate | secondary | 6.11e-03 | 1.21e-07 |
| Natural Gas Prod. | 1,4-Dichlorobenzene | secondary | 5.85e-03 | 1.16e-07 |
| Fuel Oil #2 Prod. | Acrolein | secondary | 4.13e-03 | 8.18e-08 |
| US electric grid | Chlorobenzene | model/secondary | 3.83e-03 | 7.59e-08 |
| US electric grid | Vinyl acetate | model/secondary | 3.31e-03 | 6.56e-08 |
| Fuel Oil #2 Prod. | Benzyl chloride | secondary | 3.27e-03 | 6.49e-08 |
| Natural Gas Prod. | Chlorine | secondary | 3.25e-03 | 6.45e-08 |
| LPG Production | Acetophenone | secondary | 3.22e-03 | 6.38e-08 |
| Fuel Oil #4 Prod. | Toluene | secondary | 2.91e-03 | 5.77e-08 |
| Fuel Oil #4 Prod. | Carbon disulfide | secondary | 2.50e-03 | 4.95e-08 |
| Natural Gas Prod. | Cumene | secondary | 2.43e-03 | 4.82e-08 |
| US electric grid | Benzene | model/secondary | 2.10e-03 | 4.16e-08 |
| Fuel Oil #4 Prod. | Methyl ethyl ketone | secondary | 1.98e-03 | 3.93e-08 |
| Natural Gas Prod. | Methyl methacrylate | secondary | 1.83e-03 | 3.64e-08 |
| Fuel Oil #4 Prod. | Isophorone | secondary | 1.82e-03 | 3.61e-08 |
| Japanese Electric Grid | Dichloromethane | model/secondary | 1.75e-03 | 3.46e-08 |
| US electric grid | Acetophenone | model/secondary | 1.74e-03 | 3.45e-08 |
| LPG Production | Tetrachloroethylene | secondary | 1.67e-03 | 3.31e-08 |
| Natural Gas Prod. | Methyl hydrazine | secondary | 1.64e-03 | 3.25e-08 |
| Fuel Oil #6 Prod. | Toluene | secondary | 1.42e-03 | 2.83e-08 |
| Fuel Oil #4 Prod. | Phenol | secondary | 1.42e-03 | 2.81e-08 |
| Fuel Oil #6 Prod. | Carbon disulfide | secondary | 1.33e-03 | 2.64e-08 |
| Natural Gas Prod. | 2-Chloroacetophenone | secondary | 1.28e-03 | 2.55e-08 |
| Fuel Oil #4 Prod. | Styrene | secondary | 1.27e-03 | 2.52e-08 |

## Table M-36. LCD LCIA Results for the Aesthetics Impact Category

| Process Group | Material | LCI Data Type | Odor (m3) | % of Total |
|---|---|---|---|---|
| LPG Production | 1,1,1-Trichloroethane | secondary | 1.21e-03 | 2.41e-08 |
| LPG Production | Chlorine | secondary | 1.11e-03 | 2.21e-08 |
| Fuel Oil #6 Prod. | Methyl ethyl ketone | secondary | 1.06e-03 | 2.10e-08 |
| Fuel Oil #6 Prod. | Isophorone | secondary | 9.71e-04 | 1.93e-08 |
| US electric grid | Tetrachloroethylene | model/secondary | 9.02e-04 | 1.79e-08 |
| Fuel Oil #2 Prod. | Toluene | secondary | 8.82e-04 | 1.75e-08 |
| Fuel Oil #4 Prod. | Naphthalene | secondary | 7.79e-04 | 1.54e-08 |
| Fuel Oil #6 Prod. | Phenol | secondary | 7.56e-04 | 1.50e-08 |
| Fuel Oil #2 Prod. | Carbon disulfide | secondary | 7.09e-04 | 1.41e-08 |
| US electric grid | 1,1,1-Trichloroethane | model/secondary | 7.02e-04 | 1.39e-08 |
| Fuel Oil #6 Prod. | Styrene | secondary | 6.77e-04 | 1.34e-08 |
| Fuel Oil #4 Prod. | o-xylene | secondary | 5.99e-04 | 1.19e-08 |
| Fuel Oil #2 Prod. | Methyl ethyl ketone | secondary | 5.63e-04 | 1.12e-08 |
| Fuel Oil #2 Prod. | Isophorone | secondary | 5.18e-04 | 1.03e-08 |
| LPG Production | 1,2-Dichloroethane | secondary | 5.15e-04 | 1.02e-08 |
| Fuel Oil #4 Prod. | Cumene | secondary | 4.58e-04 | 9.08e-09 |
| Natural Gas Prod. | Chlorobenzene | secondary | 4.03e-04 | 8.00e-09 |
| Fuel Oil #2 Prod. | Phenol | secondary | 4.03e-04 | 7.99e-09 |
| Fuel Oil #2 Prod. | Styrene | secondary | 3.61e-04 | 7.16e-09 |
| Fuel Oil #6 Prod. | Naphthalene | secondary | 3.61e-04 | 7.16e-09 |
| Japanese Electric Grid | Chloroform | model/secondary | 3.50e-04 | 6.94e-09 |
| Natural Gas Prod. | Vinyl acetate | secondary | 3.48e-04 | 6.91e-09 |
| Fuel Oil #4 Prod. | Methyl methacrylate | secondary | 3.46e-04 | 6.85e-09 |
| Fuel Oil #4 Prod. | Methyl hydrazine | secondary | 3.09e-04 | 6.13e-09 |
| Fuel Oil #6 Prod. | o-xylene | secondary | 2.82e-04 | 5.59e-09 |
| US electric grid | 1,2-Dichloroethane | model/secondary | 2.78e-04 | 5.52e-09 |
| Fuel Oil #2 Prod. | Naphthalene | secondary | 2.45e-04 | 4.85e-09 |
| Fuel Oil #6 Prod. | Cumene | secondary | 2.44e-04 | 4.84e-09 |
| Fuel Oil #4 Prod. | 2-Chloroacetophenone | secondary | 2.42e-04 | 4.80e-09 |
| Fuel Oil #2 Prod. | o-xylene | secondary | 1.86e-04 | 3.69e-09 |
| Fuel Oil #6 Prod. | Methyl methacrylate | secondary | 1.84e-04 | 3.65e-09 |
| Natural Gas Prod. | Acetophenone | secondary | 1.83e-04 | 3.64e-09 |
| Fuel Oil #4 Prod. | 1,4-Dichlorobenzene | secondary | 1.79e-04 | 3.54e-09 |
| Fuel Oil #6 Prod. | Methyl hydrazine | secondary | 1.65e-04 | 3.27e-09 |
| LPG Production | Dichloromethane | secondary | 1.46e-04 | 2.89e-09 |
| US electric grid | o-xylene | model/secondary | 1.42e-04 | 2.82e-09 |
| Fuel Oil #2 Prod. | Cumene | secondary | 1.30e-04 | 2.58e-09 |
| Fuel Oil #6 Prod. | 2-Chloroacetophenone | secondary | 1.29e-04 | 2.56e-09 |
| Fuel Oil #2 Prod. | Methyl methacrylate | secondary | 9.82e-05 | 1.95e-09 |
| Natural Gas Prod. | Tetrachloroethylene | secondary | 9.50e-05 | 1.88e-09 |
| Fuel Oil #2 Prod. | Methyl hydrazine | secondary | 8.79e-05 | 1.74e-09 |
| Fuel Oil #6 Prod. | 1,4-Dichlorobenzene | secondary | 8.02e-05 | 1.59e-09 |
| US electric grid | Dichloromethane | model/secondary | 7.89e-05 | 1.56e-09 |
| Fuel Oil #4 Prod. | Chlorobenzene | secondary | 7.60e-05 | 1.51e-09 |
| Natural Gas Prod. | 1,1,1-Trichloroethane | secondary | 6.92e-05 | 1.37e-09 |
| Fuel Oil #2 Prod. | 2-Chloroacetophenone | secondary | 6.87e-05 | 1.36e-09 |
| Fuel Oil #4 Prod. | Vinyl acetate | secondary | 6.57e-05 | 1.30e-09 |
| Fuel Oil #2 Prod. | 1,4-Dichlorobenzene | secondary | 5.72e-05 | 1.13e-09 |
| Fuel Oil #6 Prod. | Chlorobenzene | secondary | 4.05e-05 | 8.04e-10 |
| Fuel Oil #6 Prod. | Vinyl acetate | secondary | 3.50e-05 | 6.94e-10 |
| Fuel Oil #4 Prod. | Acetophenone | secondary | 3.46e-05 | 6.85e-10 |

## Table M-36. LCD LCIA Results for the Aesthetics Impact Category

| Process Group | Material | LCI Data Type | Odor (m3) | % of Total |
|---|---|---|---|---|
| Natural Gas Prod. | 1,2-Dichloroethane | secondary | 2.93e-05 | 5.82e-10 |
| LPG Production | Chloroform | secondary | 2.92e-05 | 5.79e-10 |
| Fuel Oil #2 Prod. | Chlorobenzene | secondary | 2.16e-05 | 4.28e-10 |
| Fuel Oil #2 Prod. | Vinyl acetate | secondary | 1.87e-05 | 3.70e-10 |
| Fuel Oil #6 Prod. | Acetophenone | secondary | 1.84e-05 | 3.65e-10 |
| Fuel Oil #4 Prod. | Tetrachloroethylene | secondary | 1.79e-05 | 3.55e-10 |
| US electric grid | Chloroform | model/secondary | 1.58e-05 | 3.13e-10 |
| Fuel Oil #4 Prod. | 1,1,1-Trichloroethane | secondary | 1.30e-05 | 2.59e-10 |
| Fuel Oil #4 Prod. | Chlorine | secondary | 9.86e-06 | 1.95e-10 |
| Fuel Oil #2 Prod. | Acetophenone | secondary | 9.82e-06 | 1.95e-10 |
| Fuel Oil #6 Prod. | Tetrachloroethylene | secondary | 9.54e-06 | 1.89e-10 |
| Natural Gas Prod. | Dichloromethane | secondary | 8.31e-06 | 1.65e-10 |
| Fuel Oil #6 Prod. | 1,1,1-Trichloroethane | secondary | 6.95e-06 | 1.38e-10 |
| Fuel Oil #4 Prod. | 1,2-Dichloroethane | secondary | 5.53e-06 | 1.10e-10 |
| Fuel Oil #2 Prod. | Tetrachloroethylene | secondary | 5.09e-06 | 1.01e-10 |
| Fuel Oil #6 Prod. | Chlorine | secondary | 4.39e-06 | 8.71e-11 |
| Fuel Oil #2 Prod. | 1,1,1-Trichloroethane | secondary | 3.71e-06 | 7.35e-11 |
| Fuel Oil #2 Prod. | Chlorine | secondary | 3.17e-06 | 6.29e-11 |
| Fuel Oil #6 Prod. | 1,2-Dichloroethane | secondary | 2.95e-06 | 5.85e-11 |
| Natural Gas Prod. | Chloroform | secondary | 1.66e-06 | 3.30e-11 |
| Fuel Oil #2 Prod. | 1,2-Dichloroethane | secondary | 1.57e-06 | 3.12e-11 |
| Fuel Oil #4 Prod. | Dichloromethane | secondary | 1.57e-06 | 3.11e-11 |
| Fuel Oil #6 Prod. | Dichloromethane | secondary | 8.35e-07 | 1.66e-11 |
| Fuel Oil #2 Prod. | Dichloromethane | secondary | 4.45e-07 | 8.82e-12 |
| Fuel Oil #4 Prod. | Chloroform | secondary | 3.14e-07 | 6.22e-12 |
| Fuel Oil #6 Prod. | Chloroform | secondary | 1.67e-07 | 3.32e-12 |
| Fuel Oil #2 Prod. | Chloroform | secondary | 8.91e-08 | 1.77e-12 |
| **Total Manufacturing** | | | **4.93e+06** | **9.77e+01** |
| **Use, Maintenance and Repair Life-cycle Stage** | | | | |
| US electric grid | Acetaldehyde | model/secondary | 7.08e+04 | 1.40e+00 |
| US electric grid | Propionaldehyde | model/secondary | 3.64e+03 | 7.22e-02 |
| US electric grid | Acrolein | model/secondary | 1.41e+02 | 2.80e-03 |
| US electric grid | Benzyl chloride | model/secondary | 1.12e+02 | 2.22e-03 |
| US electric grid | Formaldehyde | model/secondary | 6.46e+01 | 1.28e-03 |
| US electric grid | Carbon disulfide | model/secondary | 2.42e+01 | 4.80e-04 |
| US electric grid | Methyl ethyl ketone | model/secondary | 1.92e+01 | 3.82e-04 |
| US electric grid | Isophorone | model/secondary | 1.77e+01 | 3.51e-04 |
| US electric grid | Toluene | model/secondary | 1.58e+01 | 3.14e-04 |
| US electric grid | Phenol | model/secondary | 1.38e+01 | 2.73e-04 |
| US electric grid | Styrene | model/secondary | 1.23e+01 | 2.45e-04 |
| US electric grid | Cumene | model/secondary | 4.45e+00 | 8.81e-05 |
| US electric grid | Naphthalene | model/secondary | 3.42e+00 | 6.78e-05 |
| US electric grid | Methyl methacrylate | model/secondary | 3.35e+00 | 6.65e-05 |
| US electric grid | Methyl hydrazine | model/secondary | 3.00e+00 | 5.95e-05 |
| US electric grid | 2-Chloroacetophenone | model/secondary | 2.35e+00 | 4.66e-05 |
| US electric grid | Xylene (mixed isomers) | model/secondary | 2.03e+00 | 4.04e-05 |
| US electric grid | Chlorobenzene | model/secondary | 7.38e-01 | 1.46e-05 |
| US electric grid | Vinyl acetate | model/secondary | 6.37e-01 | 1.26e-05 |
| US electric grid | Benzene | model/secondary | 4.04e-01 | 8.02e-06 |
| US electric grid | Acetophenone | model/secondary | 3.35e-01 | 6.65e-06 |
| US electric grid | Tetrachloroethylene | model/secondary | 1.74e-01 | 3.45e-06 |

## Table M-36. LCD LCIA Results for the Aesthetics Impact Category

| Process Group | Material | LCI Data Type | Odor (m3) | % of Total |
|---|---|---|---|---|
| US electric grid | 1,1,1-Trichloroethane | model/secondary | 1.35e-01 | 2.68e-06 |
| US electric grid | 1,2-Dichloroethane | model/secondary | 5.37e-02 | 1.06e-06 |
| US electric grid | o-xylene | model/secondary | 2.74e-02 | 5.43e-07 |
| US electric grid | Dichloromethane | model/secondary | 1.52e-02 | 3.01e-07 |
| US electric grid | Chloroform | model/secondary | 3.05e-03 | 6.04e-08 |
| **Total Use, Maintenance and Repair** | | | **7.49e+04** | **1.49e+00** |
| **End-of-life Life-cycle Stage** | | | | |
| LCD landfilling | Hydrogen sulfide | primary | 1.29e+02 | 2.56e-03 |
| LPG Production | Hydrogen sulfide | secondary | 2.81e+01 | 5.58e-04 |
| US electric grid | Acetaldehyde | model/secondary | 1.34e+01 | 2.66e-04 |
| US electric grid | Propionaldehyde | model/secondary | 6.91e-01 | 1.37e-05 |
| LPG Production | Acetaldehyde | secondary | 5.58e-02 | 1.11e-06 |
| US electric grid | Acrolein | model/secondary | 2.68e-02 | 5.31e-07 |
| US electric grid | Benzyl chloride | model/secondary | 2.12e-02 | 4.21e-07 |
| LCD landfilling | Toluene | primary | 1.92e-02 | 3.81e-07 |
| US electric grid | Formaldehyde | model/secondary | 1.23e-02 | 2.43e-07 |
| LCD landfilling | Xylene (mixed isomers) | primary | 9.80e-03 | 1.94e-07 |
| LPG Production | Formaldehyde | secondary | 9.43e-03 | 1.87e-07 |
| LPG Production | Ammonia | secondary | 8.59e-03 | 1.70e-07 |
| US electric grid | Carbon disulfide | model/secondary | 4.60e-03 | 9.12e-08 |
| US electric grid | Methyl ethyl ketone | model/secondary | 3.65e-03 | 7.24e-08 |
| US electric grid | Isophorone | model/secondary | 3.36e-03 | 6.66e-08 |
| US electric grid | Toluene | model/secondary | 3.01e-03 | 5.96e-08 |
| LPG Production | Propionaldehyde | secondary | 2.87e-03 | 5.69e-08 |
| US electric grid | Phenol | model/secondary | 2.61e-03 | 5.18e-08 |
| US electric grid | Styrene | model/secondary | 2.34e-03 | 4.64e-08 |
| LCD landfilling | Benzene | primary | 1.51e-03 | 3.00e-08 |
| US electric grid | Cumene | model/secondary | 8.43e-04 | 1.67e-08 |
| US electric grid | Naphthalene | model/secondary | 6.49e-04 | 1.29e-08 |
| US electric grid | Methyl methacrylate | model/secondary | 6.37e-04 | 1.26e-08 |
| US electric grid | Methyl hydrazine | model/secondary | 5.70e-04 | 1.13e-08 |
| LPG Production | Benzene | secondary | 5.25e-04 | 1.04e-08 |
| US electric grid | 2-Chloroacetophenone | model/secondary | 4.46e-04 | 8.84e-09 |
| US electric grid | Xylene (mixed isomers) | model/secondary | 3.86e-04 | 7.66e-09 |
| US electric grid | Chlorobenzene | model/secondary | 1.40e-04 | 2.78e-09 |
| US electric grid | Vinyl acetate | model/secondary | 1.21e-04 | 2.40e-09 |
| LPG Production | Acrolein | secondary | 1.11e-04 | 2.20e-09 |
| LPG Production | Benzyl chloride | secondary | 8.81e-05 | 1.75e-09 |
| LCD landfilling | Trichloroethylene | primary | 8.47e-05 | 1.68e-09 |
| US electric grid | Benzene | model/secondary | 7.67e-05 | 1.52e-09 |
| LCD incineration | Trichloroethylene | secondary | 6.57e-05 | 1.30e-09 |
| US electric grid | Acetophenone | model/secondary | 6.37e-05 | 1.26e-09 |
| LCD landfilling | Tetrachloroethylene | primary | 3.98e-05 | 7.90e-10 |
| US electric grid | Tetrachloroethylene | model/secondary | 3.30e-05 | 6.54e-10 |
| US electric grid | 1,1,1-Trichloroethane | model/secondary | 2.57e-05 | 5.09e-10 |
| LPG Production | Toluene | secondary | 2.45e-05 | 4.85e-10 |
| LPG Production | Carbon disulfide | secondary | 1.91e-05 | 3.78e-10 |
| LPG Production | Methyl ethyl ketone | secondary | 1.52e-05 | 3.00e-10 |
| LPG Production | Isophorone | secondary | 1.39e-05 | 2.76e-10 |
| LCD landfilling | 1,2-Dichloroethane | primary | 1.32e-05 | 2.62e-10 |

## Table M-36. LCD LCIA Results for the Aesthetics Impact Category

| Process Group | Material | LCI Data Type | Odor (m3) | % of Total |
|---|---|---|---|---|
| LPG Production | Phenol | secondary | 1.08e-05 | 2.15e-10 |
| US electric grid | 1,2-Dichloroethane | model/secondary | 1.02e-05 | 2.02e-10 |
| LPG Production | Styrene | secondary | 9.71e-06 | 1.93e-10 |
| LPG Production | Naphthalene | secondary | 6.89e-06 | 1.37e-10 |
| LPG Production | o-xylene | secondary | 5.22e-06 | 1.04e-10 |
| US electric grid | o-xylene | model/secondary | 5.19e-06 | 1.03e-10 |
| LPG Production | Cumene | secondary | 3.50e-06 | 6.94e-11 |
| US electric grid | Dichloromethane | model/secondary | 2.88e-06 | 5.72e-11 |
| LPG Production | Methyl methacrylate | secondary | 2.64e-06 | 5.24e-11 |
| LPG Production | Methyl hydrazine | secondary | 2.36e-06 | 4.69e-11 |
| LPG Production | 2-Chloroacetophenone | secondary | 1.85e-06 | 3.67e-11 |
| LPG Production | 1,4-Dichlorobenzene | secondary | 1.62e-06 | 3.22e-11 |
| LCD landfilling | Dichloromethane | primary | 8.25e-07 | 1.64e-11 |
| LPG Production | Chlorobenzene | secondary | 5.81e-07 | 1.15e-11 |
| US electric grid | Chloroform | model/secondary | 5.78e-07 | 1.15e-11 |
| LCD landfilling | Chloroform | primary | 5.08e-07 | 1.01e-11 |
| LPG Production | Vinyl acetate | secondary | 5.02e-07 | 9.95e-12 |
| LCD landfilling | Carbon tetrachloride | primary | 3.74e-07 | 7.41e-12 |
| LCD incineration | Carbon tetrachloride | secondary | 2.90e-07 | 5.75e-12 |
| LPG Production | Acetophenone | secondary | 2.64e-07 | 5.24e-12 |
| LPG Production | Tetrachloroethylene | secondary | 1.37e-07 | 2.71e-12 |
| LPG Production | 1,1,1-Trichloroethane | secondary | 9.97e-08 | 1.98e-12 |
| LPG Production | Chlorine | secondary | 9.13e-08 | 1.81e-12 |
| LPG Production | 1,2-Dichloroethane | secondary | 4.23e-08 | 8.38e-13 |
| LPG Production | Dichloromethane | secondary | 1.20e-08 | 2.37e-13 |
| LPG Production | Chloroform | secondary | 2.40e-09 | 4.75e-14 |
| Natural Gas Prod. | Chloroform | secondary | -3.50e-07 | -6.93e-12 |
| Fuel Oil #4 Prod. | Chloroform | secondary | -1.45e-06 | -2.87e-11 |
| Natural Gas Prod. | Dichloromethane | secondary | -1.74e-06 | -3.46e-11 |
| Natural Gas Prod. | 1,2-Dichloroethane | secondary | -6.16e-06 | -1.22e-10 |
| Fuel Oil #4 Prod. | Dichloromethane | secondary | -7.22e-06 | -1.43e-10 |
| Natural Gas Prod. | 1,1,1-Trichloroethane | secondary | -1.45e-05 | -2.88e-10 |
| Natural Gas Prod. | Tetrachloroethylene | secondary | -2.00e-05 | -3.96e-10 |
| Fuel Oil #4 Prod. | 1,2-Dichloroethane | secondary | -2.55e-05 | -5.05e-10 |
| Natural Gas Prod. | Acetophenone | secondary | -3.85e-05 | -7.64e-10 |
| Fuel Oil #4 Prod. | Chlorine | secondary | -4.54e-05 | -9.01e-10 |
| LCD incineration | Chlorine | secondary | -5.47e-05 | -1.08e-09 |
| Fuel Oil #4 Prod. | 1,1,1-Trichloroethane | secondary | -6.01e-05 | -1.19e-09 |
| Natural Gas Prod. | Vinyl acetate | secondary | -7.32e-05 | -1.45e-09 |
| Fuel Oil #4 Prod. | Tetrachloroethylene | secondary | -8.25e-05 | -1.64e-09 |
| Natural Gas Prod. | Chlorobenzene | secondary | -8.47e-05 | -1.68e-09 |
| LCD incineration | Chloroform | secondary | -8.73e-05 | -1.73e-09 |
| Fuel Oil #4 Prod. | Acetophenone | secondary | -1.59e-04 | -3.16e-09 |
| Natural Gas Prod. | 2-Chloroacetophenone | secondary | -2.70e-04 | -5.35e-09 |
| Fuel Oil #4 Prod. | Vinyl acetate | secondary | -3.03e-04 | -6.00e-09 |
| Natural Gas Prod. | Methyl hydrazine | secondary | -3.45e-04 | -6.83e-09 |
| Fuel Oil #4 Prod. | Chlorobenzene | secondary | -3.50e-04 | -6.95e-09 |
| Natural Gas Prod. | Methyl methacrylate | secondary | -3.85e-04 | -7.64e-09 |
| LCD incineration | Dichloromethane | secondary | -4.37e-04 | -8.66e-09 |
| Natural Gas Prod. | Cumene | secondary | -5.10e-04 | -1.01e-08 |
| Natural Gas Prod. | Chlorine | secondary | -6.83e-04 | -1.35e-08 |

## Table M-36. LCD LCIA Results for the Aesthetics Impact Category

| Process Group | Material | LCI Data Type | Odor (m3) | % of Total |
|---|---|---|---|---|
| Fuel Oil #4 Prod. | 1,4-Dichlorobenzene | secondary | -8.23e-04 | -1.63e-08 |
| Fuel Oil #4 Prod. | 2-Chloroacetophenone | secondary | -1.11e-03 | -2.21e-08 |
| Natural Gas Prod. | 1,4-Dichlorobenzene | secondary | -1.23e-03 | -2.44e-08 |
| Natural Gas Prod. | Styrene | secondary | -1.42e-03 | -2.81e-08 |
| Fuel Oil #4 Prod. | Methyl hydrazine | secondary | -1.43e-03 | -2.83e-08 |
| LCD incineration | 1,2-Dichloroethane | secondary | -1.53e-03 | -3.04e-08 |
| Natural Gas Prod. | Phenol | secondary | -1.58e-03 | -3.13e-08 |
| Fuel Oil #4 Prod. | Methyl methacrylate | secondary | -1.59e-03 | -3.16e-08 |
| Natural Gas Prod. | Isophorone | secondary | -2.03e-03 | -4.03e-08 |
| Fuel Oil #4 Prod. | Cumene | secondary | -2.11e-03 | -4.18e-08 |
| Natural Gas Prod. | Methyl ethyl ketone | secondary | -2.21e-03 | -4.38e-08 |
| Fuel Oil #4 Prod. | o-xylene | secondary | -2.76e-03 | -5.47e-08 |
| Natural Gas Prod. | Carbon disulfide | secondary | -2.78e-03 | -5.52e-08 |
| Natural Gas Prod. | Naphthalene | secondary | -2.92e-03 | -5.80e-08 |
| Fuel Oil #4 Prod. | Naphthalene | secondary | -3.59e-03 | -7.11e-08 |
| LCD incineration | 1,1,1-Trichloroethane | secondary | -3.64e-03 | -7.23e-08 |
| LCD incineration | Tetrachloroethylene | secondary | -4.97e-03 | -9.86e-08 |
| Fuel Oil #4 Prod. | Styrene | secondary | -5.86e-03 | -1.16e-07 |
| Fuel Oil #4 Prod. | Phenol | secondary | -6.53e-03 | -1.30e-07 |
| Fuel Oil #4 Prod. | Isophorone | secondary | -8.40e-03 | -1.67e-07 |
| Fuel Oil #4 Prod. | Methyl ethyl ketone | secondary | -9.13e-03 | -1.81e-07 |
| LCD incineration | Acetophenone | secondary | -9.66e-03 | -1.91e-07 |
| Fuel Oil #4 Prod. | Carbon disulfide | secondary | -1.15e-02 | -2.28e-07 |
| Natural Gas Prod. | Benzyl chloride | secondary | -1.28e-02 | -2.55e-07 |
| Fuel Oil #4 Prod. | Toluene | secondary | -1.34e-02 | -2.66e-07 |
| Natural Gas Prod. | Acrolein | secondary | -1.62e-02 | -3.21e-07 |
| LCD incineration | Vinyl acetate | secondary | -1.83e-02 | -3.64e-07 |
| LCD incineration | Chlorobenzene | secondary | -2.12e-02 | -4.21e-07 |
| Natural Gas Prod. | Toluene | secondary | -2.86e-02 | -5.66e-07 |
| Natural Gas Prod. | o-xylene | secondary | -2.94e-02 | -5.84e-07 |
| Fuel Oil #4 Prod. | Benzyl chloride | secondary | -5.31e-02 | -1.05e-06 |
| LCD incineration | Xylene (mixed isomers) | secondary | -5.48e-02 | -1.09e-06 |
| Fuel Oil #4 Prod. | Acrolein | secondary | -6.69e-02 | -1.33e-06 |
| LCD incineration | Methyl hydrazine | secondary | -8.64e-02 | -1.71e-06 |
| LCD incineration | Naphthalene | secondary | -8.91e-02 | -1.77e-06 |
| LCD incineration | Methyl methacrylate | secondary | -9.66e-02 | -1.91e-06 |
| LCD incineration | Cumene | secondary | -1.28e-01 | -2.54e-06 |
| Natural Gas Prod. | Formaldehyde | secondary | -1.64e-01 | -3.25e-06 |
| Fuel Oil #4 Prod. | Benzene | secondary | -2.66e-01 | -5.27e-06 |
| LCD incineration | Benzene | secondary | -3.23e-01 | -6.40e-06 |
| LCD incineration | Styrene | secondary | -3.55e-01 | -7.04e-06 |
| LCD incineration | Phenol | secondary | -3.96e-01 | -7.86e-06 |
| Natural Gas Prod. | Propionaldehyde | secondary | -4.18e-01 | -8.29e-06 |
| LCD incineration | Toluene | secondary | -4.73e-01 | -9.38e-06 |
| LCD incineration | Isophorone | secondary | -5.09e-01 | -1.01e-05 |
| LCD incineration | Methyl ethyl ketone | secondary | -5.54e-01 | -1.10e-05 |
| LCD incineration | Carbon disulfide | secondary | -6.97e-01 | -1.38e-05 |
| Fuel Oil #4 Prod. | Propionaldehyde | secondary | -1.73e+00 | -3.43e-05 |
| LCD incineration | Benzyl chloride | secondary | -3.22e+00 | -6.38e-05 |
| Natural Gas Prod. | Benzene | secondary | -3.89e+00 | -7.72e-05 |
| LCD incineration | Acrolein | secondary | -4.06e+00 | -8.05e-05 |

## Table M-36. LCD LCIA Results for the Aesthetics Impact Category

| Process Group | Material | LCI Data Type | Odor (m3) | % of Total |
|---|---|---|---|---|
| Fuel Oil #4 Prod. | Ammonia | secondary | -4.24e+00 | -8.40e-05 |
| LCD incineration | Formaldehyde | secondary | -5.17e+00 | -1.03e-04 |
| Fuel Oil #4 Prod. | Formaldehyde | secondary | -6.51e+00 | -1.29e-04 |
| Natural Gas Prod. | Acetaldehyde | secondary | -8.13e+00 | -1.61e-04 |
| LCD incineration | Ammonia | secondary | -1.35e+01 | -2.68e-04 |
| Fuel Oil #4 Prod. | Acetaldehyde | secondary | -3.36e+01 | -6.67e-04 |
| Natural Gas Prod. | Hydrogen sulfide | secondary | -5.19e+01 | -1.03e-03 |
| Natural Gas Prod. | Ammonia | secondary | -5.20e+01 | -1.03e-03 |
| LCD incineration | Propionaldehyde | secondary | -1.05e+02 | -2.08e-03 |
| LCD incineration | Hydrogen sulfide | secondary | -1.20e+03 | -2.37e-02 |
| LCD incineration | Acetaldehyde | secondary | -2.04e+03 | -4.04e-02 |
| Fuel Oil #4 Prod. | Hydrogen sulfide | secondary | -1.96e+04 | -3.89e-01 |
| **Total End-of-life** | | | **-2.30e+04** | **-4.56e-01** |
| **Total All Life-cycle Stages** | | | **5.04e+06** | **1.00e+02** |

## Table M-37. CRT LCIA Results for the Aquatic Toxicity Impact Category

| Process Group | Material | LCI Data Type | Aquatic Toxicity (tox-kg) | % of Total |
|---|---|---|---|---|
| **Materials Processing Life-cycle Stage** | | | | |
| Aluminum Prod. | Aluminum (+3) | secondary | 2.76e-02 | 1.23e+01 |
| Aluminum Prod. | Copper (+1 & +2) | secondary | 2.13e-02 | 9.46e+00 |
| Invar | Copper (+1 & +2) | secondary | 1.11e-02 | 4.96e+00 |
| Invar | Aluminum (+3) | secondary | 9.89e-03 | 4.40e+00 |
| Invar | Zinc (+2) | secondary | 9.00e-03 | 4.00e+00 |
| Lead | Aluminum (+3) | secondary | 8.03e-03 | 3.57e+00 |
| Ferrite mfg. | Zinc (+2) | secondary | 6.81e-03 | 3.03e+00 |
| Aluminum Prod. | Zinc (+2) | secondary | 6.44e-03 | 2.86e+00 |
| ABS Production | Ammonia | secondary | 6.17e-03 | 2.74e+00 |
| Lead | Copper (+1 & +2) | secondary | 6.15e-03 | 2.73e+00 |
| Steel Prod., cold-rolled, semi-finished | Phosphorus (yellow or white) | secondary | 4.60e-03 | 2.04e+00 |
| Steel Prod., cold-rolled, semi-finished | Ammonia | secondary | 2.80e-03 | 1.24e+00 |
| Lead | Zinc (+2) | secondary | 1.83e-03 | 8.16e-01 |
| Polycarbonate Production | Copper (+1 & +2) | secondary | 1.23e-03 | 5.45e-01 |
| Steel Prod., cold-rolled, semi-finished | Copper (+1 & +2) | secondary | 1.02e-03 | 4.52e-01 |
| Ferrite mfg. | Aluminum (+3) | secondary | 9.68e-04 | 4.31e-01 |
| Aluminum Prod. | Barium sulfate | secondary | 9.07e-04 | 4.03e-01 |
| ABS Production | Aluminum (+3) | secondary | 8.82e-04 | 3.92e-01 |
| Invar | Ammonia | secondary | 8.20e-04 | 3.65e-01 |
| Ferrite mfg. | Copper (+1 & +2) | secondary | 7.04e-04 | 3.13e-01 |
| ABS Production | Copper (+1 & +2) | secondary | 5.62e-04 | 2.50e-01 |
| Styrene-butadiene Copolymer Prod. | Copper (+1 & +2) | secondary | 5.49e-04 | 2.44e-01 |
| Aluminum Prod. | Titanium tetrachloride | secondary | 4.56e-04 | 2.03e-01 |
| Polycarbonate Production | Mercury compounds | secondary | 4.30e-04 | 1.91e-01 |
| Aluminum Prod. | Strontium (Sr II) | secondary | 3.19e-04 | 1.42e-01 |
| Steel Prod., cold-rolled, semi-finished | Aluminum (+3) | secondary | 2.74e-04 | 1.22e-01 |
| Ferrite mfg. | Ammonia | secondary | 2.64e-04 | 1.18e-01 |
| Lead | Barium sulfate | secondary | 2.29e-04 | 1.02e-01 |
| Steel Prod., cold-rolled, semi-finished | Nitrogen dioxide | secondary | 1.98e-04 | 8.79e-02 |
| ABS Production | Mercury compounds | secondary | 1.97e-04 | 8.77e-02 |
| Steel Prod., cold-rolled, semi-finished | Zinc (+2) | secondary | 1.96e-04 | 8.72e-02 |
| Styrene-butadiene Copolymer Prod. | Mercury compounds | secondary | 1.93e-04 | 8.57e-02 |
| Steel Prod., cold-rolled, semi-finished | Fluorides (F-) | secondary | 1.93e-04 | 8.57e-02 |
| Aluminum Prod. | Lead cmpds | secondary | 1.72e-04 | 7.64e-02 |
| Polycarbonate Production | Zinc (+2) | secondary | 1.71e-04 | 7.59e-02 |
| Invar | Strontium (Sr II) | secondary | 1.65e-04 | 7.36e-02 |
| Invar | Titanium tetrachloride | secondary | 1.62e-04 | 7.22e-02 |
| Aluminum Prod. | Molybdenum (Mo II, Mo III, Mo IV, Mo V, Mo VI) | secondary | 1.55e-04 | 6.89e-02 |
| Steel Prod., cold-rolled, semi-finished | Strontium (Sr II) | secondary | 1.49e-04 | 6.63e-02 |
| Lead | Titanium tetrachloride | secondary | 1.33e-04 | 5.93e-02 |
| Polycarbonate Production | Chlorine | secondary | 1.22e-04 | 5.42e-02 |
| Polycarbonate Production | Ammonia | secondary | 1.19e-04 | 5.28e-02 |
| Aluminum Prod. | Cadmium cmpds | secondary | 1.16e-04 | 5.16e-02 |
| Aluminum Prod. | Barium cmpds | secondary | 9.35e-05 | 4.16e-02 |
| Aluminum Prod. | Nitrate | secondary | 9.13e-05 | 4.06e-02 |
| Steel Prod., cold-rolled, semi-finished | Mercury compounds | secondary | 8.00e-05 | 3.56e-02 |
| ABS Production | Zinc (+2) | secondary | 7.82e-05 | 3.48e-02 |
| Styrene-butadiene Copolymer Prod. | Zinc (+2) | secondary | 7.64e-05 | 3.40e-02 |
| Invar | Barium sulfate | secondary | 6.91e-05 | 3.08e-02 |

## Table M-37. CRT LCIA Results for the Aquatic Toxicity Impact Category

| Process Group | Material | LCI Data Type | Aquatic Toxicity (tox-kg) | % of Total |
|---|---|---|---|---|
| Steel Prod., cold-rolled, semi-finished | Barium sulfate | secondary | 6.87e-05 | 3.05e-02 |
| Ferrite mfg. | Barium sulfate | secondary | 6.75e-05 | 3.00e-02 |
| Steel Prod., cold-rolled, semi-finished | Xylene (mixed isomers) | secondary | 6.51e-05 | 2.89e-02 |
| Lead | Strontium (Sr II) | secondary | 6.40e-05 | 2.84e-02 |
| ABS Production | Nitrate | secondary | 6.01e-05 | 2.67e-02 |
| Invar | Lead cmpds | secondary | 5.87e-05 | 2.61e-02 |
| ABS Production | Chlorine | secondary | 5.59e-05 | 2.49e-02 |
| Polycarbonate Production | Phenol | secondary | 5.55e-05 | 2.47e-02 |
| Styrene-butadiene Copolymer Prod. | Chlorine | secondary | 5.46e-05 | 2.43e-02 |
| Lead | Lead cmpds | secondary | 5.41e-05 | 2.41e-02 |
| Invar | Molybdenum (Mo II, Mo III, Mo IV, Mo V, Mo VI) | secondary | 5.40e-05 | 2.40e-02 |
| Polystyrene Prod., high-impact | Ammonia | secondary | 5.18e-05 | 2.30e-02 |
| Ferrite mfg. | Strontium (Sr II) | secondary | 4.84e-05 | 2.15e-02 |
| Lead | Molybdenum (Mo II, Mo III, Mo IV, Mo V, Mo VI) | secondary | 4.68e-05 | 2.08e-02 |
| Invar | Barium cmpds | secondary | 3.86e-05 | 1.72e-02 |
| Aluminum Prod. | Nickel cmpds | secondary | 3.82e-05 | 1.70e-02 |
| Aluminum Prod. | Chromium (III) | secondary | 3.20e-05 | 1.42e-02 |
| Invar | Nickel cmpds | secondary | 3.03e-05 | 1.35e-02 |
| Steel Prod., cold-rolled, semi-finished | Silver compounds | secondary | 2.83e-05 | 1.26e-02 |
| Aluminum Prod. | Aromatic hydrocarbons | secondary | 2.83e-05 | 1.26e-02 |
| Invar | Xylene (mixed isomers) | secondary | 2.44e-05 | 1.08e-02 |
| Lead | Barium cmpds | secondary | 2.43e-05 | 1.08e-02 |
| Aluminum Prod. | Manganese cmpds | secondary | 2.28e-05 | 1.01e-02 |
| Ferrite mfg. | Phosphorus (yellow or white) | secondary | 2.21e-05 | 9.85e-03 |
| Invar | Manganese cmpds | secondary | 2.10e-05 | 9.36e-03 |
| Ferrite mfg. | Xylene (mixed isomers) | secondary | 1.93e-05 | 8.56e-03 |
| Invar | Phosphorus (yellow or white) | secondary | 1.86e-05 | 8.29e-03 |
| Aluminum Prod. | Fluoride | secondary | 1.82e-05 | 8.09e-03 |
| Lead | Nitrate | secondary | 1.80e-05 | 8.01e-03 |
| Steel Prod., cold-rolled, semi-finished | Lead cmpds | secondary | 1.74e-05 | 7.74e-03 |
| Aluminum Prod. | Vanadium (V3+, V5+) | secondary | 1.63e-05 | 7.24e-03 |
| Aluminum Prod. | Selenium | secondary | 1.59e-05 | 7.05e-03 |
| Steel Prod., cold-rolled, semi-finished | Barium cmpds | secondary | 1.55e-05 | 6.90e-03 |
| Ferrite mfg. | Titanium tetrachloride | secondary | 1.50e-05 | 6.66e-03 |
| Invar | Aromatic hydrocarbons | secondary | 1.47e-05 | 6.52e-03 |
| Styrene-butadiene Copolymer Prod. | Aluminum (+3) | secondary | 1.44e-05 | 6.39e-03 |
| Ferrite mfg. | Manganese cmpds | secondary | 1.32e-05 | 5.87e-03 |
| Steel Prod., cold-rolled, semi-finished | Aromatic hydrocarbons | secondary | 1.30e-05 | 5.78e-03 |
| Aluminum Prod. | Xylene (mixed isomers) | secondary | 1.26e-05 | 5.61e-03 |
| Invar | Cadmium cmpds | secondary | 1.26e-05 | 5.60e-03 |
| Invar | Chromium (III) | secondary | 1.14e-05 | 5.09e-03 |
| Lead | Nickel cmpds | secondary | 1.12e-05 | 4.99e-03 |
| Steel Prod., cold-rolled, semi-finished | Tin (Sn++, Sn4+) | secondary | 1.04e-05 | 4.63e-03 |
| Ferrite mfg. | Lead cmpds | secondary | 1.02e-05 | 4.55e-03 |
| Lead | Chromium (III) | secondary | 9.38e-06 | 4.17e-03 |
| Lead | Fluoride | secondary | 8.91e-06 | 3.96e-03 |
| Invar | Fluoride | secondary | 8.80e-06 | 3.91e-03 |
| Aluminum Prod. | Arsenic cmpds | secondary | 8.57e-06 | 3.81e-03 |
| Invar | Silver compounds | secondary | 8.56e-06 | 3.81e-03 |
| Ferrite mfg. | Silver compounds | secondary | 8.35e-06 | 3.72e-03 |

## Table M-37. CRT LCIA Results for the Aquatic Toxicity Impact Category

| Process Group | Material | LCI Data Type | Aquatic Toxicity (tox-kg) | % of Total |
|---|---|---|---|---|
| Ferrite mfg. | Nitrate | secondary | 8.08e-06 | 3.59e-03 |
| Polycarbonate Production | Aluminum (+3) | secondary | 8.02e-06 | 3.56e-03 |
| Ferrite mfg. | Barium cmpds | secondary | 7.00e-06 | 3.11e-03 |
| Aluminum Prod. | Benzene | secondary | 6.79e-06 | 3.02e-03 |
| Lead | Manganese cmpds | secondary | 6.47e-06 | 2.88e-03 |
| Invar | Toluene | secondary | 6.23e-06 | 2.77e-03 |
| Invar | Vanadium (V3+, V5+) | secondary | 6.00e-06 | 2.67e-03 |
| Styrene-butadiene Copolymer Prod. | Nitrate | secondary | 5.79e-06 | 2.58e-03 |
| Invar | Selenium | secondary | 5.69e-06 | 2.53e-03 |
| Lead | Vanadium (V3+, V5+) | secondary | 4.75e-06 | 2.11e-03 |
| Lead | Selenium | secondary | 4.63e-06 | 2.06e-03 |
| Aluminum Prod. | Toluene | secondary | 4.24e-06 | 1.89e-03 |
| Ferrite mfg. | Aromatic hydrocarbons | secondary | 4.10e-06 | 1.82e-03 |
| Aluminum Prod. | Phenol | secondary | 3.79e-06 | 1.69e-03 |
| Invar | Benzene | secondary | 3.63e-06 | 1.61e-03 |
| Steel Prod., cold-rolled, semi-finished | Phenol | secondary | 3.55e-06 | 1.58e-03 |
| Steel Prod., cold-rolled, semi-finished | Benzene | secondary | 3.54e-06 | 1.58e-03 |
| ABS Production | Phenol | secondary | 3.49e-06 | 1.55e-03 |
| Invar | Arsenic cmpds | secondary | 3.05e-06 | 1.35e-03 |
| Invar | Tin (Sn++, Sn4+) | secondary | 3.03e-06 | 1.35e-03 |
| Steel Prod., cold-rolled, semi-finished | Chlorine | secondary | 3.01e-06 | 1.34e-03 |
| Styrene-butadiene Copolymer Prod. | Phenol | secondary | 2.93e-06 | 1.30e-03 |
| Invar | Cobalt (Co I, Co II, Co III) | secondary | 2.88e-06 | 1.28e-03 |
| Steel Prod., cold-rolled, semi-finished | Molybdenum (Mo II, Mo III, Mo IV, Mo V, Mo VI) | secondary | 2.84e-06 | 1.26e-03 |
| Steel Prod., cold-rolled, semi-finished | Cadmium cmpds | secondary | 2.68e-06 | 1.19e-03 |
| Lead | Arsenic cmpds | secondary | 2.49e-06 | 1.11e-03 |
| Lead | Xylene (mixed isomers) | secondary | 2.44e-06 | 1.08e-03 |
| Steel Prod., cold-rolled, semi-finished | Cyanide (-1) | secondary | 2.37e-06 | 1.05e-03 |
| Steel Prod., cold-rolled, semi-finished | Boric acid | secondary | 2.27e-06 | 1.01e-03 |
| Steel Prod., cold-rolled, semi-finished | Toluene | secondary | 2.22e-06 | 9.87e-04 |
| Steel Prod., cold-rolled, semi-finished | Manganese cmpds | secondary | 2.10e-06 | 9.32e-04 |
| Invar | Phenol | secondary | 1.99e-06 | 8.85e-04 |
| Ferrite mfg. | Fluoride | secondary | 1.85e-06 | 8.21e-04 |
| Lead | Cobalt (Co I, Co II, Co III) | secondary | 1.84e-06 | 8.16e-04 |
| Invar | Ethylbenzene | secondary | 1.77e-06 | 7.87e-04 |
| Steel Prod., cold-rolled, semi-finished | Ethylbenzene | secondary | 1.76e-06 | 7.81e-04 |
| Ferrite mfg. | Nickel cmpds | secondary | 1.60e-06 | 7.10e-04 |
| Lead | Mercury compounds | secondary | 1.39e-06 | 6.20e-04 |
| Lead | Benzene | secondary | 1.32e-06 | 5.86e-04 |
| Aluminum Prod. | Nitrites | secondary | 1.25e-06 | 5.58e-04 |
| Steel Prod., cold-rolled, semi-finished | Chromium (VI) | secondary | 1.23e-06 | 5.48e-04 |
| Steel Prod., cold-rolled, semi-finished | Nickel cmpds | secondary | 1.19e-06 | 5.31e-04 |
| Ferrite mfg. | Benzene | secondary | 1.08e-06 | 4.82e-04 |
| Ferrite mfg. | Chromium (III) | secondary | 1.08e-06 | 4.81e-04 |
| Polystyrene Prod., high-impact | Phenol | secondary | 1.07e-06 | 4.75e-04 |
| ABS Production | Nickel cmpds | secondary | 1.01e-06 | 4.49e-04 |
| Polycarbonate Production | Nickel (+2) | secondary | 9.23e-07 | 4.11e-04 |
| Polycarbonate Production | Nitrate | secondary | 9.23e-07 | 4.11e-04 |
| Lead | Toluene | secondary | 8.22e-07 | 3.66e-04 |
| Lead | Phenol | secondary | 8.16e-07 | 3.63e-04 |

## Table M-37. CRT LCIA Results for the Aquatic Toxicity Impact Category

| Process Group | Material | LCI Data Type | Aquatic Toxicity (tox-kg) | % of Total |
|---|---|---|---|---|
| Steel Prod., cold-rolled, semi-finished | Chromium (III) | secondary | 8.02e-07 | 3.57e-04 |
| Ferrite mfg. | Molybdenum (Mo II, Mo III, Mo IV, Mo V, Mo VI) | secondary | 7.99e-07 | 3.55e-04 |
| Ferrite mfg. | Vanadium (V3+, V5+) | secondary | 6.83e-07 | 3.04e-04 |
| Ferrite mfg. | Toluene | secondary | 6.82e-07 | 3.04e-04 |
| Invar | Boric acid | secondary | 6.44e-07 | 2.86e-04 |
| Ferrite mfg. | Boric acid | secondary | 6.29e-07 | 2.80e-04 |
| Polystyrene Prod., high-impact | Nitrate | secondary | 6.05e-07 | 2.69e-04 |
| Steel Prod., cold-rolled, semi-finished | Vanadium (V3+, V5+) | secondary | 5.94e-07 | 2.64e-04 |
| Ferrite mfg. | Cadmium cmpds | secondary | 5.89e-07 | 2.62e-04 |
| Invar | Cyanide (-1) | secondary | 5.64e-07 | 2.51e-04 |
| Invar | Nitrites | secondary | 5.52e-07 | 2.46e-04 |
| Ferrite mfg. | Selenium | secondary | 5.52e-07 | 2.45e-04 |
| Ferrite mfg. | Phenol | secondary | 5.50e-07 | 2.45e-04 |
| Steel Prod., cold-rolled, semi-finished | Titanium tetrachloride | secondary | 5.28e-07 | 2.35e-04 |
| Ferrite mfg. | Ethylbenzene | secondary | 5.20e-07 | 2.31e-04 |
| Invar | Nitrates/nitrites | secondary | 4.69e-07 | 2.09e-04 |
| Styrene-butadiene Copolymer Prod. | Nickel (+2) | secondary | 4.14e-07 | 1.84e-04 |
| Ferrite mfg. | Cyanide (-1) | secondary | 3.97e-07 | 1.77e-04 |
| Aluminum Prod. | Cyanide (-1) | secondary | 3.79e-07 | 1.69e-04 |
| Invar | Boron (B III) | secondary | 3.27e-07 | 1.46e-04 |
| Ferrite mfg. | Arsenic cmpds | secondary | 2.96e-07 | 1.31e-04 |
| Steel Prod., cold-rolled, semi-finished | Arsenic cmpds | secondary | 2.77e-07 | 1.23e-04 |
| Lead | Nitrites | secondary | 2.65e-07 | 1.18e-04 |
| Invar | Chlorine | secondary | 2.51e-07 | 1.12e-04 |
| Ferrite mfg. | Chlorine | secondary | 2.45e-07 | 1.09e-04 |
| Steel Prod., cold-rolled, semi-finished | Rubidium ion (Rb+) | secondary | 2.42e-07 | 1.08e-04 |
| Lead | Boron (B III) | secondary | 1.97e-07 | 8.74e-05 |
| Steel Prod., cold-rolled, semi-finished | Nitrates/nitrites | secondary | 1.94e-07 | 8.63e-05 |
| Ferrite mfg. | Cobalt (Co I, Co II, Co III) | secondary | 1.76e-07 | 7.82e-05 |
| Steel Prod., cold-rolled, semi-finished | Selenium | secondary | 1.59e-07 | 7.09e-05 |
| Invar | Mercury compounds | secondary | 9.86e-08 | 4.39e-05 |
| Ferrite mfg. | Mercury compounds | secondary | 9.63e-08 | 4.28e-05 |
| Invar | Rubidium ion (Rb+) | secondary | 7.31e-08 | 3.25e-05 |
| Ferrite mfg. | Rubidium ion (Rb+) | secondary | 7.14e-08 | 3.17e-05 |
| Steel Prod., cold-rolled, semi-finished | Boron (B III) | secondary | 7.04e-08 | 3.13e-05 |
| Ferrite mfg. | Nitrites | secondary | 3.83e-08 | 1.71e-05 |
| Invar | Chromium (VI) | secondary | 3.25e-08 | 1.45e-05 |
| Steel Prod., cold-rolled, semi-finished | Phosphorus pentoxide | secondary | 3.11e-08 | 1.38e-05 |
| Ferrite mfg. | Chromium (VI) | secondary | 2.76e-08 | 1.23e-05 |
| Ferrite mfg. | Boron (B III) | secondary | 2.32e-08 | 1.03e-05 |
| Steel Prod., cold-rolled, semi-finished | Hydrazine | secondary | 2.30e-08 | 1.02e-05 |
| Steel Prod., cold-rolled, semi-finished | Morpholine | secondary | 1.88e-08 | 8.35e-06 |
| Aluminum Prod. | Chromium (VI) | secondary | 9.21e-09 | 4.09e-06 |
| Invar | Phosphorus pentoxide | secondary | 9.09e-09 | 4.04e-06 |
| Ferrite mfg. | Phosphorus pentoxide | secondary | 8.87e-09 | 3.94e-06 |
| Invar | Hydrazine | secondary | 6.52e-09 | 2.90e-06 |
| Ferrite mfg. | Hydrazine | secondary | 6.37e-09 | 2.83e-06 |
| Invar | Morpholine | secondary | 5.32e-09 | 2.36e-06 |
| Ferrite mfg. | Morpholine | secondary | 5.19e-09 | 2.31e-06 |
| Lead | Chromium (VI) | secondary | 4.46e-09 | 1.99e-06 |

## Table M-37. CRT LCIA Results for the Aquatic Toxicity Impact Category

| Process Group | Material | LCI Data Type | Aquatic Toxicity (tox-kg) | % of Total |
|---|---|---|---|---|
| Invar | Hypochlorous acid | secondary | 3.54e-09 | 1.58e-06 |
| Steel Prod., cold-rolled, semi-finished | Hypochlorous acid | secondary | 3.52e-09 | 1.56e-06 |
| Ferrite mfg. | Hypochlorous acid | secondary | 3.46e-09 | 1.54e-06 |
| Steel Prod., cold-rolled, semi-finished | Cobalt (Co I, Co II, Co III) | secondary | 3.14e-09 | 1.40e-06 |
| Invar | Dichloromethane | secondary | 2.00e-09 | 8.88e-07 |
| Steel Prod., cold-rolled, semi-finished | Dichloromethane | secondary | 1.98e-09 | 8.82e-07 |
| Ferrite mfg. | Dichloromethane | secondary | 1.95e-09 | 8.67e-07 |
| Aluminum Prod. | Triethylene glycol | secondary | 1.73e-09 | 7.71e-07 |
| Invar | Acetic acid | secondary | 1.51e-09 | 6.73e-07 |
| Ferrite mfg. | Acetic acid | secondary | 1.48e-09 | 6.57e-07 |
| Invar | Triethylene glycol | secondary | 1.38e-09 | 6.14e-07 |
| Steel Prod., cold-rolled, semi-finished | Triethylene glycol | secondary | 1.37e-09 | 6.09e-07 |
| Ferrite mfg. | Triethylene glycol | secondary | 1.35e-09 | 5.99e-07 |
| Lead | Triethylene glycol | secondary | 1.30e-09 | 5.76e-07 |
| Steel Prod., cold-rolled, semi-finished | Nitrites | secondary | 4.82e-10 | 2.14e-07 |
| Invar | Halogenated matter (organic) | secondary | 2.74e-10 | 1.22e-07 |
| Ferrite mfg. | Halogenated matter (organic) | secondary | 2.68e-10 | 1.19e-07 |
| Steel Prod., cold-rolled, semi-finished | Edetic acid (EDTA) | secondary | 1.27e-10 | 5.66e-08 |
| Invar | Edetic acid (EDTA) | secondary | 3.60e-11 | 1.60e-08 |
| Ferrite mfg. | Edetic acid (EDTA) | secondary | 3.52e-11 | 1.56e-08 |
| Ferrite mfg. | Tin (Sn++, Sn4+) | secondary | 7.28e-12 | 3.24e-09 |
| Invar | Chloroform | secondary | 3.23e-12 | 1.44e-09 |
| Steel Prod., cold-rolled, semi-finished | Chloroform | secondary | 3.21e-12 | 1.43e-09 |
| Ferrite mfg. | Chloroform | secondary | 3.15e-12 | 1.40e-09 |
| Steel Prod., cold-rolled, semi-finished | Lithium salts | secondary | 2.38e-12 | 1.06e-09 |
| Invar | Trichloroethylene | secondary | 1.61e-12 | 7.16e-10 |
| Steel Prod., cold-rolled, semi-finished | Trichloroethylene | secondary | 1.60e-12 | 7.10e-10 |
| Ferrite mfg. | Trichloroethylene | secondary | 1.57e-12 | 6.99e-10 |
| Invar | Lithium salts | secondary | 6.75e-13 | 3.00e-10 |
| Ferrite mfg. | Lithium salts | secondary | 6.59e-13 | 2.93e-10 |
| Invar | Formaldehyde | secondary | 1.22e-13 | 5.42e-11 |
| Ferrite mfg. | Formaldehyde | secondary | 1.19e-13 | 5.29e-11 |
| Steel Prod., cold-rolled, semi-finished | Formaldehyde | secondary | 1.18e-13 | 5.23e-11 |
| Steel Prod., cold-rolled, semi-finished | Tetrachloroethylene | secondary | 8.60e-14 | 3.82e-11 |
| Invar | Tetrachloroethylene | secondary | 8.47e-14 | 3.77e-11 |
| Ferrite mfg. | Tetrachloroethylene | secondary | 8.27e-14 | 3.68e-11 |
| Invar | 1,1,1-Trichloroethane | secondary | 6.01e-14 | 2.67e-11 |
| Steel Prod., cold-rolled, semi-finished | 1,1,1-Trichloroethane | secondary | 5.94e-14 | 2.64e-11 |
| Ferrite mfg. | 1,1,1-Trichloroethane | secondary | 5.86e-14 | 2.60e-11 |
| Invar | Hexachloroethane | secondary | 3.60e-16 | 1.60e-13 |
| Steel Prod., cold-rolled, semi-finished | Hexachloroethane | secondary | 3.58e-16 | 1.59e-13 |
| Ferrite mfg. | Hexachloroethane | secondary | 3.52e-16 | 1.56e-13 |
| **Total Materials Processing** | | | **1.36e-01** | **6.04e+01** |
| **Manufacturing Life-cycle Stage** | | | | |
| CRT tube mfg. | Phosphorus (yellow or white) | primary | 5.94e-02 | 2.64e+01 |
| CRT tube mfg. | Fluoride | primary | 6.91e-03 | 3.07e+00 |
| Glass/frit | Fluorides (F-) | primary | 5.87e-03 | 2.61e+00 |
| CRT tube mfg. | Zinc (elemental) | primary | 5.12e-03 | 2.28e+00 |
| CRT tube mfg. | Copper | primary | 4.78e-03 | 2.13e+00 |

## Table M-37. CRT LCIA Results for the Aquatic Toxicity Impact Category

| Process Group | Material | LCI Data Type | Aquatic Toxicity (tox-kg) | % of Total |
|---|---|---|---|---|
| LPG Production | Phenol | secondary | 4.25e-03 | 1.89e+00 |
| LPG Production | Aluminum (+3) | secondary | 2.46e-03 | 1.09e+00 |
| CRT tube mfg. | Nickel | primary | 1.59e-04 | 7.05e-02 |
| LPG Production | Nitrate | secondary | 1.21e-04 | 5.39e-02 |
| Glass/frit | Lead | primary | 8.68e-05 | 3.86e-02 |
| LPG Production | Fluorides (F-) | secondary | 6.81e-05 | 3.03e-02 |
| LPG Production | Copper (+1 & +2) | secondary | 1.55e-05 | 6.89e-03 |
| Fuel Oil #6 Prod. | Phenol | secondary | 1.44e-05 | 6.39e-03 |
| Fuel Oil #2 Prod. | Phenol | secondary | 1.19e-05 | 5.30e-03 |
| Fuel Oil #6 Prod. | Aluminum (+3) | secondary | 8.32e-06 | 3.70e-03 |
| CRT tube mfg. | Manganese | primary | 7.21e-06 | 3.21e-03 |
| Fuel Oil #2 Prod. | Aluminum (+3) | secondary | 6.90e-06 | 3.07e-03 |
| CRT tube mfg. | Lead | primary | 6.03e-06 | 2.68e-03 |
| LPG Production | Zinc (+2) | secondary | 4.34e-06 | 1.93e-03 |
| CRT tube mfg. | Molybdenum | primary | 3.77e-06 | 1.68e-03 |
| CRT tube mfg. | Cyanide (-1) | primary | 1.21e-06 | 5.39e-04 |
| Fuel Oil #4 Prod. | Phenol | secondary | 9.69e-07 | 4.31e-04 |
| Fuel Oil #4 Prod. | Aluminum (+3) | secondary | 5.61e-07 | 2.49e-04 |
| Fuel Oil #6 Prod. | Fluorides (F-) | secondary | 5.50e-07 | 2.44e-04 |
| Fuel Oil #6 Prod. | Nitrate | secondary | 4.85e-07 | 2.16e-04 |
| Fuel Oil #2 Prod. | Nitrate | secondary | 3.45e-07 | 1.54e-04 |
| Fuel Oil #2 Prod. | Fluorides (F-) | secondary | 2.14e-07 | 9.50e-05 |
| Natural Gas Prod. | Zinc (+2) | secondary | 1.94e-07 | 8.61e-05 |
| LPG Production | Aromatic hydrocarbons | secondary | 1.75e-07 | 7.78e-05 |
| Glass/frit | Nickel | primary | 1.64e-07 | 7.30e-05 |
| LPG Production | Barium cmpds | secondary | 1.42e-07 | 6.32e-05 |
| Natural Gas Prod. | Fluorides (F-) | secondary | 1.19e-07 | 5.30e-05 |
| Glass/frit | Nitrates/nitrites | primary | 1.14e-07 | 5.09e-05 |
| LPG Production | Chromium (VI) | secondary | 1.02e-07 | 4.52e-05 |
| Glass/frit | Chromium | primary | 9.86e-08 | 4.39e-05 |
| Natural Gas Prod. | Phenol | secondary | 8.65e-08 | 3.85e-05 |
| LPG Production | Chromium (III) | secondary | 7.28e-08 | 3.24e-05 |
| LPG Production | Cadmium cmpds | secondary | 6.89e-08 | 3.06e-05 |
| Fuel Oil #6 Prod. | Copper (+1 & +2) | secondary | 5.24e-08 | 2.33e-05 |
| Natural Gas Prod. | Aluminum (+3) | secondary | 4.97e-08 | 2.21e-05 |
| Fuel Oil #2 Prod. | Copper (+1 & +2) | secondary | 4.34e-08 | 1.93e-05 |
| Natural Gas Prod. | Nitrate | secondary | 3.01e-08 | 1.34e-05 |
| Fuel Oil #4 Prod. | Nitrate | secondary | 2.93e-08 | 1.31e-05 |
| LPG Production | Lead cmpds | secondary | 2.30e-08 | 1.02e-05 |
| Fuel Oil #4 Prod. | Fluorides (F-) | secondary | 2.28e-08 | 1.01e-05 |
| LPG Production | Toluene | secondary | 2.14e-08 | 9.51e-06 |
| Fuel Oil #6 Prod. | Zinc (+2) | secondary | 1.97e-08 | 8.75e-06 |
| Fuel Oil #2 Prod. | Zinc (+2) | secondary | 1.25e-08 | 5.57e-06 |
| Fuel Oil #4 Prod. | Copper (+1 & +2) | secondary | 3.53e-09 | 1.57e-06 |
| Natural Gas Prod. | Chromium (VI) | secondary | 3.06e-09 | 1.36e-06 |
| LPG Production | Nickel cmpds | secondary | 2.78e-09 | 1.24e-06 |
| Natural Gas Prod. | Chromium (III) | secondary | 2.20e-09 | 9.77e-07 |
| LPG Production | Mercury compounds | secondary | 1.25e-09 | 5.56e-07 |
| Fuel Oil #4 Prod. | Zinc (+2) | secondary | 1.10e-09 | 4.90e-07 |
| LPG Production | Cyanide (-1) | secondary | 8.17e-10 | 3.63e-07 |

## Table M-37. CRT LCIA Results for the Aquatic Toxicity Impact Category

| Process Group | Material | LCI Data Type | Aquatic Toxicity (tox-kg) | % of Total |
|---|---|---|---|---|
| Fuel Oil #6 Prod. | Aromatic hydrocarbons | secondary | 5.92e-10 | 2.63e-07 |
| Fuel Oil #2 Prod. | Aromatic hydrocarbons | secondary | 4.91e-10 | 2.18e-07 |
| Fuel Oil #6 Prod. | Barium cmpds | secondary | 4.81e-10 | 2.14e-07 |
| Fuel Oil #2 Prod. | Barium cmpds | secondary | 3.99e-10 | 1.77e-07 |
| Natural Gas Prod. | Copper (+1 & +2) | secondary | 3.13e-10 | 1.39e-07 |
| Fuel Oil #6 Prod. | Chromium (VI) | secondary | 2.51e-10 | 1.12e-07 |
| LPG Production | Halogenated matter (organic) | secondary | 2.33e-10 | 1.04e-07 |
| Fuel Oil #6 Prod. | Cadmium cmpds | secondary | 2.33e-10 | 1.04e-07 |
| Fuel Oil #2 Prod. | Cadmium cmpds | secondary | 1.93e-10 | 8.59e-08 |
| Fuel Oil #6 Prod. | Chromium (III) | secondary | 1.80e-10 | 8.01e-08 |
| Fuel Oil #2 Prod. | Chromium (VI) | secondary | 1.48e-10 | 6.58e-08 |
| Fuel Oil #2 Prod. | Chromium (III) | secondary | 1.06e-10 | 4.72e-08 |
| Fuel Oil #6 Prod. | Lead cmpds | secondary | 7.78e-11 | 3.46e-08 |
| Fuel Oil #6 Prod. | Toluene | secondary | 7.23e-11 | 3.22e-08 |
| Fuel Oil #2 Prod. | Lead cmpds | secondary | 6.45e-11 | 2.87e-08 |
| Fuel Oil #2 Prod. | Toluene | secondary | 6.00e-11 | 2.67e-08 |
| Fuel Oil #4 Prod. | Aromatic hydrocarbons | secondary | 3.99e-11 | 1.78e-08 |
| Fuel Oil #4 Prod. | Barium cmpds | secondary | 3.24e-11 | 1.44e-08 |
| Fuel Oil #4 Prod. | Cadmium cmpds | secondary | 1.57e-11 | 6.98e-09 |
| Fuel Oil #4 Prod. | Chromium (VI) | secondary | 1.34e-11 | 5.95e-09 |
| Fuel Oil #4 Prod. | Chromium (III) | secondary | 9.60e-12 | 4.27e-09 |
| Fuel Oil #6 Prod. | Nickel cmpds | secondary | 9.42e-12 | 4.19e-09 |
| Fuel Oil #2 Prod. | Nickel cmpds | secondary | 7.81e-12 | 3.47e-09 |
| Fuel Oil #4 Prod. | Lead cmpds | secondary | 5.24e-12 | 2.33e-09 |
| Fuel Oil #4 Prod. | Toluene | secondary | 4.88e-12 | 2.17e-09 |
| Fuel Oil #6 Prod. | Mercury compounds | secondary | 4.23e-12 | 1.88e-09 |
| Natural Gas Prod. | Aromatic hydrocarbons | secondary | 3.54e-12 | 1.57e-09 |
| Fuel Oil #2 Prod. | Mercury compounds | secondary | 3.51e-12 | 1.56e-09 |
| Natural Gas Prod. | Barium cmpds | secondary | 2.87e-12 | 1.28e-09 |
| Fuel Oil #6 Prod. | Cyanide (-1) | secondary | 2.76e-12 | 1.23e-09 |
| Fuel Oil #2 Prod. | Cyanide (-1) | secondary | 2.29e-12 | 1.02e-09 |
| Natural Gas Prod. | Cadmium cmpds | secondary | 1.39e-12 | 6.19e-10 |
| Fuel Oil #6 Prod. | Halogenated matter (organic) | secondary | 7.89e-13 | 3.51e-10 |
| Fuel Oil #2 Prod. | Halogenated matter (organic) | secondary | 6.55e-13 | 2.91e-10 |
| Fuel Oil #4 Prod. | Nickel cmpds | secondary | 6.35e-13 | 2.82e-10 |
| Natural Gas Prod. | Lead cmpds | secondary | 4.65e-13 | 2.07e-10 |
| Natural Gas Prod. | Toluene | secondary | 4.32e-13 | 1.92e-10 |
| Fuel Oil #4 Prod. | Mercury compounds | secondary | 2.85e-13 | 1.27e-10 |
| Fuel Oil #4 Prod. | Cyanide (-1) | secondary | 1.86e-13 | 8.28e-11 |
| Natural Gas Prod. | Nickel cmpds | secondary | 5.63e-14 | 2.50e-11 |
| Fuel Oil #4 Prod. | Halogenated matter (organic) | secondary | 5.32e-14 | 2.37e-11 |
| Natural Gas Prod. | Mercury compounds | secondary | 2.53e-14 | 1.12e-11 |
| Natural Gas Prod. | Cyanide (-1) | secondary | 1.65e-14 | 7.34e-12 |
| Natural Gas Prod. | Halogenated matter (organic) | secondary | 4.72e-15 | 2.10e-12 |
| **Total Manufacturing** | | | **8.93e-02** | **3.97e+01** |
| **Use, Maintenance and Repair Life-cycle Stage** | | | | |
| **Total Use, Maintenance and Repair** | | | **0.00e+00** | **0.00e+00** |
| **End-of-life Life-cycle Stage** | | | | |
| CRT landfilling | Ammonia | primary | 7.71e-05 | 3.43e-02 |

## Table M-37. CRT LCIA Results for the Aquatic Toxicity Impact Category

| Process Group | Material | LCI Data Type | Aquatic Toxicity (tox-kg) | % of Total |
|---|---|---|---|---|
| CRT Incineration | Silver compounds | secondary | 5.15e-06 | 2.29e-03 |
| CRT landfilling | Silver compounds | primary | 4.80e-06 | 2.14e-03 |
| CRT Incineration | Barium cmpds | secondary | 1.14e-07 | 5.07e-05 |
| CRT landfilling | Cadmium cmpds | primary | 9.64e-08 | 4.29e-05 |
| CRT Incineration | Cadmium cmpds | secondary | 9.33e-08 | 4.15e-05 |
| CRT landfilling | Barium cmpds | primary | 9.07e-08 | 4.03e-05 |
| LPG Production | Phenol | secondary | 3.67e-08 | 1.63e-05 |
| CRT Incineration | Chromium (VI) | secondary | 2.19e-08 | 9.72e-06 |
| LPG Production | Aluminum (+3) | secondary | 2.12e-08 | 9.44e-06 |
| CRT landfilling | Mercury compounds | primary | 2.04e-08 | 9.07e-06 |
| CRT Incineration | Mercury compounds | secondary | 2.00e-08 | 8.89e-06 |
| CRT landfilling | Arsenic cmpds | primary | 1.84e-08 | 8.20e-06 |
| CRT Incineration | Arsenic cmpds | secondary | 1.77e-08 | 7.89e-06 |
| CRT landfilling | Chromium (VI) | primary | 1.66e-08 | 7.39e-06 |
| CRT Incineration | Lead cmpds | secondary | 1.60e-08 | 7.10e-06 |
| CRT Incineration | Chromium (III) | secondary | 1.57e-08 | 6.97e-06 |
| CRT landfilling | Lead cmpds | primary | 1.56e-08 | 6.92e-06 |
| CRT landfilling | Chromium (III) | primary | 1.19e-08 | 5.30e-06 |
| CRT landfilling | Xylene (mixed isomers) | primary | 4.17e-09 | 1.86e-06 |
| CRT Incineration | o-xylene | secondary | 2.68e-09 | 1.19e-06 |
| CRT Incineration | Toluene | secondary | 2.53e-09 | 1.12e-06 |
| CRT landfilling | Toluene | primary | 2.36e-09 | 1.05e-06 |
| LPG Production | Nitrate | secondary | 1.05e-09 | 4.65e-07 |
| CRT Incineration | Ethylbenzene | secondary | 9.51e-10 | 4.23e-07 |
| CRT landfilling | Ethylbenzene | primary | 8.86e-10 | 3.94e-07 |
| LPG Production | Fluorides (F-) | secondary | 5.88e-10 | 2.61e-07 |
| CRT Incineration | Tetrachloroethylene | secondary | 1.45e-10 | 6.45e-08 |
| CRT landfilling | Tetrachloroethylene | primary | 1.35e-10 | 6.02e-08 |
| LPG Production | Copper (+1 & +2) | secondary | 1.34e-10 | 5.94e-08 |
| CRT Incineration | Benzene | secondary | 9.63e-11 | 4.28e-08 |
| CRT landfilling | Benzene | primary | 8.98e-11 | 3.99e-08 |
| CRT Incineration | Selenium | secondary | 8.22e-11 | 3.66e-08 |
| CRT landfilling | Selenium | primary | 8.08e-11 | 3.59e-08 |
| CRT Incineration | Carbon tetrachloride | secondary | 5.89e-11 | 2.62e-08 |
| CRT landfilling | Carbon tetrachloride | primary | 5.49e-11 | 2.44e-08 |
| CRT Incineration | Trichloroethylene | secondary | 4.45e-11 | 1.98e-08 |
| CRT landfilling | Trichloroethylene | primary | 4.15e-11 | 1.84e-08 |
| LPG Production | Zinc (+2) | secondary | 3.74e-11 | 1.66e-08 |
| CRT Incineration | Chloroform | secondary | 2.38e-11 | 1.06e-08 |
| CRT Incineration | Vinyl chloride | secondary | 2.38e-11 | 1.06e-08 |
| CRT landfilling | Chloroform | primary | 2.22e-11 | 9.89e-09 |
| CRT landfilling | Vinyl chloride | primary | 2.22e-11 | 9.86e-09 |
| CRT Incineration | 1,2-Dichloroethane | secondary | 1.25e-11 | 5.57e-09 |
| CRT landfilling | 1,2-Dichloroethane | primary | 1.17e-11 | 5.19e-09 |
| CRT Incineration | Dichloromethane | secondary | 8.25e-12 | 3.67e-09 |
| CRT landfilling | Dichloromethane | primary | 7.69e-12 | 3.42e-09 |
| LPG Production | Aromatic hydrocarbons | secondary | 1.51e-12 | 6.72e-10 |
| LPG Production | Barium cmpds | secondary | 1.23e-12 | 5.46e-10 |
| LPG Production | Chromium (VI) | secondary | 8.76e-13 | 3.90e-10 |
| LPG Production | Chromium (III) | secondary | 6.29e-13 | 2.80e-10 |

## Table M-37. CRT LCIA Results for the Aquatic Toxicity Impact Category

| Process Group | Material | LCI Data Type | Aquatic Toxicity (tox-kg) | % of Total |
|---|---|---|---|---|
| LPG Production | Cadmium cmpds | secondary | 5.94e-13 | 2.64e-10 |
| LPG Production | Lead cmpds | secondary | 1.98e-13 | 8.82e-11 |
| LPG Production | Toluene | secondary | 1.85e-13 | 8.21e-11 |
| LPG Production | Nickel cmpds | secondary | 2.40e-14 | 1.07e-11 |
| LPG Production | Mercury compounds | secondary | 1.08e-14 | 4.80e-12 |
| LPG Production | Cyanide (-1) | secondary | 7.05e-15 | 3.14e-12 |
| LPG Production | Halogenated matter (organic) | secondary | 2.01e-15 | 8.96e-13 |
| Natural Gas Prod. | Halogenated matter (organic) | secondary | -2.37e-15 | -1.05e-12 |
| Natural Gas Prod. | Cyanide (-1) | secondary | -8.28e-15 | -3.68e-12 |
| Natural Gas Prod. | Mercury compounds | secondary | -1.27e-14 | -5.64e-12 |
| Natural Gas Prod. | Nickel cmpds | secondary | -2.82e-14 | -1.25e-11 |
| CRT Incineration | Halogenated matter (organic) | secondary | -3.67e-14 | -1.63e-11 |
| CRT Incineration | Cyanide (-1) | secondary | -1.29e-13 | -5.71e-11 |
| Natural Gas Prod. | Toluene | secondary | -2.17e-13 | -9.64e-11 |
| Natural Gas Prod. | Lead cmpds | secondary | -2.33e-13 | -1.04e-10 |
| CRT Incineration | Nickel cmpds | secondary | -4.38e-13 | -1.95e-10 |
| Fuel Oil #4 Prod. | Halogenated matter (organic) | secondary | -5.72e-13 | -2.54e-10 |
| Natural Gas Prod. | Cadmium cmpds | secondary | -6.98e-13 | -3.10e-10 |
| Natural Gas Prod. | Barium cmpds | secondary | -1.44e-12 | -6.41e-10 |
| Natural Gas Prod. | Aromatic hydrocarbons | secondary | -1.77e-12 | -7.89e-10 |
| Fuel Oil #4 Prod. | Cyanide (-1) | secondary | -2.00e-12 | -8.91e-10 |
| Fuel Oil #4 Prod. | Mercury compounds | secondary | -3.06e-12 | -1.36e-09 |
| Fuel Oil #4 Prod. | Nickel cmpds | secondary | -6.82e-12 | -3.03e-09 |
| CRT Incineration | Aromatic hydrocarbons | secondary | -2.75e-11 | -1.22e-08 |
| Fuel Oil #4 Prod. | Toluene | secondary | -5.24e-11 | -2.33e-08 |
| Fuel Oil #4 Prod. | Lead cmpds | secondary | -5.64e-11 | -2.51e-08 |
| Fuel Oil #4 Prod. | Chromium (III) | secondary | -1.03e-10 | -4.59e-08 |
| Fuel Oil #4 Prod. | Chromium (VI) | secondary | -1.44e-10 | -6.40e-08 |
| Natural Gas Prod. | Copper (+1 & +2) | secondary | -1.57e-10 | -6.98e-08 |
| Fuel Oil #4 Prod. | Cadmium cmpds | secondary | -1.69e-10 | -7.51e-08 |
| Fuel Oil #4 Prod. | Barium cmpds | secondary | -3.48e-10 | -1.55e-07 |
| Fuel Oil #4 Prod. | Aromatic hydrocarbons | secondary | -4.29e-10 | -1.91e-07 |
| Natural Gas Prod. | Chromium (III) | secondary | -1.10e-09 | -4.90e-07 |
| Natural Gas Prod. | Chromium (VI) | secondary | -1.54e-09 | -6.83e-07 |
| CRT Incineration | Copper (+1 & +2) | secondary | -2.44e-09 | -1.08e-06 |
| CRT Incineration | Zinc (+2) | secondary | -8.28e-09 | -3.68e-06 |
| Fuel Oil #4 Prod. | Zinc (+2) | secondary | -1.19e-08 | -5.27e-06 |
| Natural Gas Prod. | Nitrate | secondary | -1.51e-08 | -6.71e-06 |
| Natural Gas Prod. | Aluminum (+3) | secondary | -2.49e-08 | -1.11e-05 |
| Fuel Oil #4 Prod. | Copper (+1 & +2) | secondary | -3.80e-08 | -1.69e-05 |
| Natural Gas Prod. | Phenol | secondary | -4.34e-08 | -1.93e-05 |
| Natural Gas Prod. | Fluorides (F-) | secondary | -5.98e-08 | -2.66e-05 |
| Natural Gas Prod. | Zinc (+2) | secondary | -9.71e-08 | -4.32e-05 |
| Fuel Oil #4 Prod. | Fluorides (F-) | secondary | -2.45e-07 | -1.09e-04 |
| Fuel Oil #4 Prod. | Nitrate | secondary | -3.15e-07 | -1.40e-04 |
| CRT Incineration | Aluminum (+3) | secondary | -3.87e-07 | -1.72e-04 |
| CRT Incineration | Phenol | secondary | -6.69e-07 | -2.97e-04 |
| CRT Incineration | Nitrate | secondary | -3.60e-06 | -1.60e-03 |
| Fuel Oil #4 Prod. | Aluminum (+3) | secondary | -6.03e-06 | -2.68e-03 |

## Table M-37. CRT LCIA Results for the Aquatic Toxicity Impact Category

| Process Group | Material | LCI Data Type | Aquatic Toxicity (tox-kg) | % of Total |
|---|---|---|---|---|
| Fuel Oil #4 Prod. | Phenol | secondary | -1.04e-05 | -4.63e-03 |
| CRT Incineration | Fluorides (F-) | secondary | -1.51e-05 | -6.73e-03 |
| CRT Incineration | Ammonia | secondary | -3.00e-04 | -1.34e-01 |
| **Total End-of-life** | | | **-2.50e-04** | **-1.11e-01** |
| **Total All Life-cycle Stages** | | | **2.25e-01** | **1.00e+02** |

## Table M-38. LCD LCIA Results for the Aquatic Toxicity Impact Category

| Process Group | Material | LCI Data Type | Aquatic Toxicity (tox-kg) | % of Total |
|---|---|---|---|---|
| **Materials Processing Life-cycle Stage** | | | | |
| PMMA Sheet Prod. | Ammonia | secondary | 3.29e-02 | 6.34e-01 |
| Aluminum Prod. | Aluminum (+3) | secondary | 1.03e-02 | 1.98e-01 |
| Aluminum Prod. | Copper (+1 & +2) | secondary | 7.92e-03 | 1.53e-01 |
| Aluminum Prod. | Zinc (+2) | secondary | 2.40e-03 | 4.62e-02 |
| Steel Prod., cold-rolled, semi-finished | Phosphorus (yellow or white) | secondary | 2.25e-03 | 4.34e-02 |
| Steel Prod., cold-rolled, semi-finished | Ammonia | secondary | 1.37e-03 | 2.64e-02 |
| Polycarbonate Production | Copper (+1 & +2) | secondary | 6.84e-04 | 1.32e-02 |
| PMMA Sheet Prod. | Copper (+1 & +2) | secondary | 5.09e-04 | 9.81e-03 |
| Steel Prod., cold-rolled, semi-finished | Copper (+1 & +2) | secondary | 4.98e-04 | 9.60e-03 |
| Aluminum Prod. | Barium sulfate | secondary | 3.38e-04 | 6.51e-03 |
| PET Resin Production | Copper (+1 & +2) | secondary | 2.41e-04 | 4.64e-03 |
| Polycarbonate Production | Mercury compounds | secondary | 2.40e-04 | 4.63e-03 |
| Styrene-butadiene Copolymer Prod. | Copper (+1 & +2) | secondary | 2.40e-04 | 4.63e-03 |
| PMMA Sheet Prod. | Mercury compounds | secondary | 1.79e-04 | 3.44e-03 |
| Aluminum Prod. | Titanium tetrachloride | secondary | 1.70e-04 | 3.28e-03 |
| Steel Prod., cold-rolled, semi-finished | Aluminum (+3) | secondary | 1.34e-04 | 2.58e-03 |
| Aluminum Prod. | Strontium (Sr II) | secondary | 1.19e-04 | 2.29e-03 |
| Steel Prod., cold-rolled, semi-finished | Nitrogen dioxide | secondary | 9.68e-05 | 1.87e-03 |
| Steel Prod., cold-rolled, semi-finished | Zinc (+2) | secondary | 9.60e-05 | 1.85e-03 |
| Polycarbonate Production | Zinc (+2) | secondary | 9.53e-05 | 1.84e-03 |
| Steel Prod., cold-rolled, semi-finished | Fluorides (F-) | secondary | 9.44e-05 | 1.82e-03 |
| Styrene-butadiene Copolymer Prod. | Mercury compounds | secondary | 8.42e-05 | 1.62e-03 |
| Steel Prod., cold-rolled, semi-finished | Strontium (Sr II) | secondary | 7.31e-05 | 1.41e-03 |
| PMMA Sheet Prod. | Zinc (+2) | secondary | 7.08e-05 | 1.37e-03 |
| Polycarbonate Production | Chlorine | secondary | 6.81e-05 | 1.31e-03 |
| Polycarbonate Production | Ammonia | secondary | 6.63e-05 | 1.28e-03 |
| Aluminum Prod. | Lead cmpds | secondary | 6.40e-05 | 1.23e-03 |
| Aluminum Prod. | Molybdenum (Mo II, Mo III, Mo IV, Mo V, Mo VI) | secondary | 5.76e-05 | 1.11e-03 |
| PMMA Sheet Prod. | Chlorine | secondary | 5.06e-05 | 9.77e-04 |
| Aluminum Prod. | Cadmium cmpds | secondary | 4.32e-05 | 8.34e-04 |
| Steel Prod., cold-rolled, semi-finished | Mercury compounds | secondary | 3.92e-05 | 7.56e-04 |
| Aluminum Prod. | Barium cmpds | secondary | 3.48e-05 | 6.72e-04 |
| Aluminum Prod. | Nitrate | secondary | 3.40e-05 | 6.55e-04 |
| Steel Prod., cold-rolled, semi-finished | Barium sulfate | secondary | 3.36e-05 | 6.49e-04 |
| PET Resin Production | Zinc (+2) | secondary | 3.35e-05 | 6.47e-04 |
| Styrene-butadiene Copolymer Prod. | Zinc (+2) | secondary | 3.34e-05 | 6.44e-04 |
| Steel Prod., cold-rolled, semi-finished | Xylene (mixed isomers) | secondary | 3.19e-05 | 6.15e-04 |
| Polycarbonate Production | Phenol | secondary | 3.10e-05 | 5.98e-04 |
| PET Resin Production | Chlorine | secondary | 2.40e-05 | 4.62e-04 |
| Styrene-butadiene Copolymer Prod. | Chlorine | secondary | 2.39e-05 | 4.61e-04 |
| Aluminum Prod. | Nickel cmpds | secondary | 1.42e-05 | 2.74e-04 |
| Steel Prod., cold-rolled, semi-finished | Silver compounds | secondary | 1.39e-05 | 2.68e-04 |
| Natural Gas Prod. | Zinc (+2) | secondary | 1.35e-05 | 2.61e-04 |
| Aluminum Prod. | Chromium (III) | secondary | 1.19e-05 | 2.30e-04 |
| Aluminum Prod. | Aromatic hydrocarbons | secondary | 1.05e-05 | 2.03e-04 |
| PMMA Sheet Prod. | Phenol | secondary | 1.04e-05 | 2.00e-04 |
| Steel Prod., cold-rolled, semi-finished | Lead cmpds | secondary | 8.52e-06 | 1.64e-04 |
| Aluminum Prod. | Manganese cmpds | secondary | 8.48e-06 | 1.64e-04 |

## Table M-38. LCD LCIA Results for the Aquatic Toxicity Impact Category

| Process Group | Material | LCI Data Type | Aquatic Toxicity (tox-kg) | % of Total |
|---|---|---|---|---|
| Natural Gas Prod. | Fluorides (F-) | secondary | 8.33e-06 | 1.61e-04 |
| PMMA Sheet Prod. | Cyanide (-1) | secondary | 7.67e-06 | 1.48e-04 |
| Steel Prod., cold-rolled, semi-finished | Barium cmpds | secondary | 7.60e-06 | 1.47e-04 |
| Aluminum Prod. | Fluoride | secondary | 6.78e-06 | 1.31e-04 |
| Steel Prod., cold-rolled, semi-finished | Aromatic hydrocarbons | secondary | 6.37e-06 | 1.23e-04 |
| Styrene-butadiene Copolymer Prod. | Aluminum (+3) | secondary | 6.28e-06 | 1.21e-04 |
| Aluminum Prod. | Vanadium (V3+, V5+) | secondary | 6.06e-06 | 1.17e-04 |
| Natural Gas Prod. | Phenol | secondary | 6.04e-06 | 1.17e-04 |
| Aluminum Prod. | Selenium | secondary | 5.90e-06 | 1.14e-04 |
| Steel Prod., cold-rolled, semi-finished | Tin (Sn++, Sn4+) | secondary | 5.10e-06 | 9.84e-05 |
| Aluminum Prod. | Xylene (mixed isomers) | secondary | 4.70e-06 | 9.06e-05 |
| Polycarbonate Production | Aluminum (+3) | secondary | 4.48e-06 | 8.63e-05 |
| Natural Gas Prod. | Aluminum (+3) | secondary | 3.47e-06 | 6.69e-05 |
| PMMA Sheet Prod. | Aluminum (+3) | secondary | 3.33e-06 | 6.42e-05 |
| Aluminum Prod. | Arsenic cmpds | secondary | 3.19e-06 | 6.15e-05 |
| Styrene-butadiene Copolymer Prod. | Nitrate | secondary | 2.53e-06 | 4.88e-05 |
| Aluminum Prod. | Benzene | secondary | 2.53e-06 | 4.88e-05 |
| PMMA Sheet Prod. | Nitrates/nitrites | secondary | 2.22e-06 | 4.28e-05 |
| Natural Gas Prod. | Nitrate | secondary | 2.10e-06 | 4.05e-05 |
| Steel Prod., cold-rolled, semi-finished | Phenol | secondary | 1.74e-06 | 3.35e-05 |
| Steel Prod., cold-rolled, semi-finished | Benzene | secondary | 1.74e-06 | 3.35e-05 |
| Aluminum Prod. | Toluene | secondary | 1.58e-06 | 3.04e-05 |
| PET Resin Production | Aluminum (+3) | secondary | 1.58e-06 | 3.04e-05 |
| Steel Prod., cold-rolled, semi-finished | Chlorine | secondary | 1.47e-06 | 2.84e-05 |
| Aluminum Prod. | Phenol | secondary | 1.41e-06 | 2.72e-05 |
| Steel Prod., cold-rolled, semi-finished | Molybdenum (Mo II, Mo III, Mo IV, Mo V, Mo VI) | secondary | 1.39e-06 | 2.69e-05 |
| Steel Prod., cold-rolled, semi-finished | Cadmium cmpds | secondary | 1.31e-06 | 2.53e-05 |
| Styrene-butadiene Copolymer Prod. | Phenol | secondary | 1.28e-06 | 2.47e-05 |
| PET Resin Production | Phenol | secondary | 1.18e-06 | 2.27e-05 |
| Steel Prod., cold-rolled, semi-finished | Cyanide (-1) | secondary | 1.16e-06 | 2.24e-05 |
| Steel Prod., cold-rolled, semi-finished | Boric acid | secondary | 1.11e-06 | 2.15e-05 |
| Steel Prod., cold-rolled, semi-finished | Toluene | secondary | 1.09e-06 | 2.10e-05 |
| Steel Prod., cold-rolled, semi-finished | Manganese cmpds | secondary | 1.03e-06 | 1.98e-05 |
| PMMA Sheet Prod. | Nickel cmpds | secondary | 9.15e-07 | 1.76e-05 |
| Steel Prod., cold-rolled, semi-finished | Ethylbenzene | secondary | 8.61e-07 | 1.66e-05 |
| Steel Prod., cold-rolled, semi-finished | Chromium (VI) | secondary | 6.04e-07 | 1.16e-05 |
| Steel Prod., cold-rolled, semi-finished | Nickel cmpds | secondary | 5.85e-07 | 1.13e-05 |
| Polycarbonate Production | Nickel (+2) | secondary | 5.16e-07 | 9.95e-06 |
| Polycarbonate Production | Nitrate | secondary | 5.16e-07 | 9.95e-06 |
| Aluminum Prod. | Nitrites | secondary | 4.67e-07 | 9.01e-06 |
| Steel Prod., cold-rolled, semi-finished | Chromium (III) | secondary | 3.93e-07 | 7.58e-06 |
| Steel Prod., cold-rolled, semi-finished | Vanadium (V3+, V5+) | secondary | 2.91e-07 | 5.61e-06 |
| Steel Prod., cold-rolled, semi-finished | Titanium tetrachloride | secondary | 2.59e-07 | 4.99e-06 |
| Natural Gas Prod. | Chromium (VI) | secondary | 2.14e-07 | 4.13e-06 |
| PET Resin Production | Mercury | secondary | 1.82e-07 | 3.50e-06 |
| PET Resin Production | Nickel (+2) | secondary | 1.82e-07 | 3.50e-06 |
| PET Resin Production | Nitrate | secondary | 1.82e-07 | 3.50e-06 |
| Styrene-butadiene Copolymer Prod. | Nickel (+2) | secondary | 1.81e-07 | 3.49e-06 |
| Natural Gas Prod. | Chromium (III) | secondary | 1.54e-07 | 2.96e-06 |
| Aluminum Prod. | Cyanide (-1) | secondary | 1.41e-07 | 2.72e-06 |
| Steel Prod., cold-rolled, semi-finished | Arsenic cmpds | secondary | 1.36e-07 | 2.62e-06 |

## Table M-38. LCD LCIA Results for the Aquatic Toxicity Impact Category

| Process Group | Material | LCI Data Type | Aquatic Toxicity (tox-kg) | % of Total |
|---|---|---|---|---|
| Steel Prod., cold-rolled, semi-finished | Rubidium ion (Rb+) | secondary | 1.19e-07 | 2.29e-06 |
| Steel Prod., cold-rolled, semi-finished | Nitrates/nitrites | secondary | 9.51e-08 | 1.83e-06 |
| Steel Prod., cold-rolled, semi-finished | Selenium | secondary | 7.81e-08 | 1.51e-06 |
| Steel Prod., cold-rolled, semi-finished | Boron (B III) | secondary | 3.45e-08 | 6.65e-07 |
| Natural Gas Prod. | Copper (+1 & +2) | secondary | 2.19e-08 | 4.22e-07 |
| Steel Prod., cold-rolled, semi-finished | Phosphorus pentoxide | secondary | 1.53e-08 | 2.94e-07 |
| Steel Prod., cold-rolled, semi-finished | Hydrazine | secondary | 1.13e-08 | 2.18e-07 |
| Steel Prod., cold-rolled, semi-finished | Morpholine | secondary | 9.20e-09 | 1.77e-07 |
| Aluminum Prod. | Chromium (VI) | secondary | 3.43e-09 | 6.61e-08 |
| Steel Prod., cold-rolled, semi-finished | Hypochlorous acid | secondary | 1.72e-09 | 3.33e-08 |
| Steel Prod., cold-rolled, semi-finished | Cobalt (Co I, Co II, Co III) | secondary | 1.54e-09 | 2.97e-08 |
| Steel Prod., cold-rolled, semi-finished | Dichloromethane | secondary | 9.72e-10 | 1.87e-08 |
| Steel Prod., cold-rolled, semi-finished | Triethylene glycol | secondary | 6.72e-10 | 1.29e-08 |
| Aluminum Prod. | Triethylene glycol | secondary | 6.46e-10 | 1.24e-08 |
| Natural Gas Prod. | Aromatic hydrocarbons | secondary | 2.47e-10 | 4.77e-09 |
| Steel Prod., cold-rolled, semi-finished | Nitrites | secondary | 2.36e-10 | 4.55e-09 |
| Natural Gas Prod. | Barium cmpds | secondary | 2.01e-10 | 3.87e-09 |
| Natural Gas Prod. | Cadmium cmpds | secondary | 9.72e-11 | 1.87e-09 |
| Steel Prod., cold-rolled, semi-finished | Edetic acid (EDTA) | secondary | 6.24e-11 | 1.20e-09 |
| Natural Gas Prod. | Lead cmpds | secondary | 3.25e-11 | 6.26e-10 |
| Natural Gas Prod. | Toluene | secondary | 3.02e-11 | 5.82e-10 |
| Natural Gas Prod. | Nickel cmpds | secondary | 3.93e-12 | 7.58e-11 |
| Natural Gas Prod. | Mercury compounds | secondary | 1.77e-12 | 3.40e-11 |
| Steel Prod., cold-rolled, semi-finished | Chloroform | secondary | 1.57e-12 | 3.03e-11 |
| Steel Prod., cold-rolled, semi-finished | Lithium salts | secondary | 1.17e-12 | 2.25e-11 |
| Natural Gas Prod. | Cyanide (-1) | secondary | 1.15e-12 | 2.22e-11 |
| Steel Prod., cold-rolled, semi-finished | Trichloroethylene | secondary | 7.83e-13 | 1.51e-11 |
| Natural Gas Prod. | Halogenated matter (organic) | secondary | 3.29e-13 | 6.35e-12 |
| Steel Prod., cold-rolled, semi-finished | Formaldehyde | secondary | 5.77e-14 | 1.11e-12 |
| Steel Prod., cold-rolled, semi-finished | Tetrachloroethylene | secondary | 4.21e-14 | 8.13e-13 |
| Steel Prod., cold-rolled, semi-finished | 1,1,1-Trichloroethane | secondary | 2.91e-14 | 5.62e-13 |
| Steel Prod., cold-rolled, semi-finished | Hexachloroethane | secondary | 1.75e-16 | 3.38e-15 |
| **Total Materials Processing** | | | **6.19e-02** | **1.19e+00** |
| **Manufacturing Life-cycle Stage** | | | | |
| Monitor/module | Phosphorus (yellow or white) | primary | 5.06e+00 | 9.77e+01 |
| Panel components | Phosphorus (yellow or white) | primary | 2.92e-02 | 5.63e-01 |
| Monitor/module | Fluorides (F-) | primary | 2.56e-02 | 4.93e-01 |
| Monitor/module | Copper | primary | 2.44e-03 | 4.70e-02 |
| Monitor/module | Hexane | primary | 1.18e-03 | 2.27e-02 |
| Monitor/module | Zinc (elemental) | primary | 9.73e-04 | 1.88e-02 |
| LCD glass mfg. | Fluorides (F-) | primary | 2.72e-04 | 5.24e-03 |
| LPG Production | Phenol | secondary | 2.04e-04 | 3.93e-03 |
| LPG Production | Aluminum (+3) | secondary | 1.18e-04 | 2.27e-03 |
| Monitor/module | Lead | primary | 1.23e-05 | 2.38e-04 |
| Monitor/module | Chromium | primary | 1.06e-05 | 2.05e-04 |
| Monitor/module | Cyanide (-1) | primary | 7.33e-06 | 1.41e-04 |
| LPG Production | Nitrate | secondary | 5.81e-06 | 1.12e-04 |
| LCD glass mfg. | Lead | primary | 4.02e-06 | 7.75e-05 |
| LPG Production | Fluorides (F-) | secondary | 3.27e-06 | 6.30e-05 |

## Table M-38. LCD LCIA Results for the Aquatic Toxicity Impact Category

| Process Group | Material | LCI Data Type | Aquatic Toxicity (tox-kg) | % of Total |
|---|---|---|---|---|
| Monitor/module | Boron | primary | 1.61e-06 | 3.11e-05 |
| Fuel Oil #4 Prod. | Phenol | secondary | 1.49e-06 | 2.88e-05 |
| Fuel Oil #4 Prod. | Aluminum (+3) | secondary | 8.64e-07 | 1.67e-05 |
| LPG Production | Copper (+1 & +2) | secondary | 7.43e-07 | 1.43e-05 |
| Monitor/module | Chromium (VI) | primary | 6.39e-07 | 1.23e-05 |
| Fuel Oil #2 Prod. | Phenol | secondary | 5.57e-07 | 1.07e-05 |
| Fuel Oil #6 Prod. | Phenol | secondary | 4.90e-07 | 9.44e-06 |
| Monitor/module | Antimony | primary | 4.64e-07 | 8.95e-06 |
| Monitor/module | Manganese | primary | 4.58e-07 | 8.83e-06 |
| Monitor/module | Nickel | primary | 4.58e-07 | 8.83e-06 |
| Monitor/module | Polychlorinated biphenyls | primary | 4.07e-07 | 7.85e-06 |
| LCD glass mfg. | Nitrate | primary | 3.66e-07 | 7.06e-06 |
| Fuel Oil #2 Prod. | Aluminum (+3) | secondary | 3.22e-07 | 6.21e-06 |
| Natural Gas Prod. | Zinc (+2) | secondary | 3.05e-07 | 5.89e-06 |
| Fuel Oil #6 Prod. | Aluminum (+3) | secondary | 2.83e-07 | 5.46e-06 |
| Monitor/module | Phenol | primary | 2.70e-07 | 5.21e-06 |
| Monitor/module | Arsenic | primary | 2.28e-07 | 4.40e-06 |
| Monitor/module | Cadmium | primary | 2.28e-07 | 4.40e-06 |
| LPG Production | Zinc (+2) | secondary | 2.08e-07 | 4.01e-06 |
| Monitor/module | Mercury | primary | 1.94e-07 | 3.74e-06 |
| Natural Gas Prod. | Fluorides (F-) | secondary | 1.88e-07 | 3.62e-06 |
| Natural Gas Prod. | Phenol | secondary | 1.36e-07 | 2.63e-06 |
| Natural Gas Prod. | Aluminum (+3) | secondary | 7.83e-08 | 1.51e-06 |
| Monitor/module | Tetrachloroethylene | primary | 7.63e-08 | 1.47e-06 |
| Natural Gas Prod. | Nitrate | secondary | 4.74e-08 | 9.15e-07 |
| Monitor/module | Tin | primary | 4.57e-08 | 8.82e-07 |
| Fuel Oil #4 Prod. | Nitrate | secondary | 4.52e-08 | 8.72e-07 |
| Fuel Oil #4 Prod. | Fluorides (F-) | secondary | 3.51e-08 | 6.77e-07 |
| Monitor/module | 1,1,1-Trichloroethane | primary | 2.40e-08 | 4.62e-07 |
| Monitor/module | Trichloroethylene | primary | 2.34e-08 | 4.51e-07 |
| Fuel Oil #6 Prod. | Fluorides (F-) | secondary | 1.87e-08 | 3.61e-07 |
| Fuel Oil #6 Prod. | Nitrate | secondary | 1.65e-08 | 3.19e-07 |
| Fuel Oil #2 Prod. | Nitrate | secondary | 1.61e-08 | 3.11e-07 |
| Fuel Oil #2 Prod. | Fluorides (F-) | secondary | 9.97e-09 | 1.92e-07 |
| LPG Production | Aromatic hydrocarbons | secondary | 8.40e-09 | 1.62e-07 |
| LCD glass mfg. | Nickel | primary | 7.60e-09 | 1.47e-07 |
| LPG Production | Barium cmpds | secondary | 6.82e-09 | 1.32e-07 |
| Fuel Oil #4 Prod. | Copper (+1 & +2) | secondary | 5.44e-09 | 1.05e-07 |
| LPG Production | Chromium (VI) | secondary | 4.87e-09 | 9.39e-08 |
| Natural Gas Prod. | Chromium (VI) | secondary | 4.83e-09 | 9.32e-08 |
| LCD glass mfg. | Chromium | primary | 4.57e-09 | 8.81e-08 |
| LPG Production | Chromium (III) | secondary | 3.49e-09 | 6.74e-08 |
| Natural Gas Prod. | Chromium (III) | secondary | 3.46e-09 | 6.68e-08 |
| LPG Production | Cadmium cmpds | secondary | 3.30e-09 | 6.37e-08 |
| Fuel Oil #2 Prod. | Copper (+1 & +2) | secondary | 2.03e-09 | 3.91e-08 |
| Fuel Oil #6 Prod. | Copper (+1 & +2) | secondary | 1.78e-09 | 3.44e-08 |
| Fuel Oil #4 Prod. | Zinc (+2) | secondary | 1.70e-09 | 3.28e-08 |
| LPG Production | Lead cmpds | secondary | 1.10e-09 | 2.13e-08 |
| LPG Production | Toluene | secondary | 1.03e-09 | 1.98e-08 |
| Fuel Oil #6 Prod. | Zinc (+2) | secondary | 6.70e-10 | 1.29e-08 |
| Fuel Oil #2 Prod. | Zinc (+2) | secondary | 5.84e-10 | 1.13e-08 |

## Table M-38. LCD LCIA Results for the Aquatic Toxicity Impact Category

| Process Group | Material | LCI Data Type | Aquatic Toxicity (tox-kg) | % of Total |
|---|---|---|---|---|
| Natural Gas Prod. | Copper (+1 & +2) | secondary | 4.93e-10 | 9.51e-09 |
| LPG Production | Nickel cmpds | secondary | 1.34e-10 | 2.58e-09 |
| Fuel Oil #4 Prod. | Aromatic hydrocarbons | secondary | 6.15e-11 | 1.19e-09 |
| LPG Production | Mercury compounds | secondary | 6.00e-11 | 1.16e-09 |
| Fuel Oil #4 Prod. | Barium cmpds | secondary | 4.99e-11 | 9.63e-10 |
| LPG Production | Cyanide (-1) | secondary | 3.92e-11 | 7.56e-10 |
| Fuel Oil #4 Prod. | Cadmium cmpds | secondary | 2.42e-11 | 4.67e-10 |
| Fuel Oil #2 Prod. | Aromatic hydrocarbons | secondary | 2.29e-11 | 4.42e-10 |
| Fuel Oil #4 Prod. | Chromium (VI) | secondary | 2.06e-11 | 3.98e-10 |
| Fuel Oil #6 Prod. | Aromatic hydrocarbons | secondary | 2.02e-11 | 3.89e-10 |
| Fuel Oil #2 Prod. | Barium cmpds | secondary | 1.86e-11 | 3.59e-10 |
| Fuel Oil #6 Prod. | Barium cmpds | secondary | 1.64e-11 | 3.16e-10 |
| Fuel Oil #4 Prod. | Chromium (III) | secondary | 1.48e-11 | 2.85e-10 |
| LPG Production | Halogenated matter (organic) | secondary | 1.12e-11 | 2.16e-10 |
| Fuel Oil #2 Prod. | Cadmium cmpds | secondary | 9.02e-12 | 1.74e-10 |
| Fuel Oil #6 Prod. | Chromium (VI) | secondary | 8.55e-12 | 1.65e-10 |
| Fuel Oil #4 Prod. | Lead cmpds | secondary | 8.08e-12 | 1.56e-10 |
| Fuel Oil #6 Prod. | Cadmium cmpds | secondary | 7.93e-12 | 1.53e-10 |
| Fuel Oil #4 Prod. | Toluene | secondary | 7.52e-12 | 1.45e-10 |
| Fuel Oil #2 Prod. | Chromium (VI) | secondary | 6.91e-12 | 1.33e-10 |
| Fuel Oil #6 Prod. | Chromium (III) | secondary | 6.13e-12 | 1.18e-10 |
| Natural Gas Prod. | Aromatic hydrocarbons | secondary | 5.58e-12 | 1.08e-10 |
| Fuel Oil #2 Prod. | Chromium (III) | secondary | 4.96e-12 | 9.56e-11 |
| Natural Gas Prod. | Barium cmpds | secondary | 4.53e-12 | 8.73e-11 |
| Fuel Oil #2 Prod. | Lead cmpds | secondary | 3.01e-12 | 5.81e-11 |
| Fuel Oil #2 Prod. | Toluene | secondary | 2.80e-12 | 5.40e-11 |
| Fuel Oil #6 Prod. | Lead cmpds | secondary | 2.65e-12 | 5.11e-11 |
| Fuel Oil #6 Prod. | Toluene | secondary | 2.46e-12 | 4.75e-11 |
| Natural Gas Prod. | Cadmium cmpds | secondary | 2.19e-12 | 4.23e-11 |
| Fuel Oil #4 Prod. | Nickel cmpds | secondary | 9.78e-13 | 1.89e-11 |
| Natural Gas Prod. | Lead cmpds | secondary | 7.33e-13 | 1.41e-11 |
| Natural Gas Prod. | Toluene | secondary | 6.82e-13 | 1.31e-11 |
| Fuel Oil #4 Prod. | Mercury compounds | secondary | 4.39e-13 | 8.47e-12 |
| Fuel Oil #2 Prod. | Nickel cmpds | secondary | 3.65e-13 | 7.03e-12 |
| Fuel Oil #6 Prod. | Nickel cmpds | secondary | 3.21e-13 | 6.18e-12 |
| Fuel Oil #4 Prod. | Cyanide (-1) | secondary | 2.87e-13 | 5.54e-12 |
| Fuel Oil #2 Prod. | Mercury compounds | secondary | 1.64e-13 | 3.16e-12 |
| Fuel Oil #6 Prod. | Mercury compounds | secondary | 1.44e-13 | 2.78e-12 |
| Fuel Oil #2 Prod. | Cyanide (-1) | secondary | 1.07e-13 | 2.06e-12 |
| Fuel Oil #6 Prod. | Cyanide (-1) | secondary | 9.41e-14 | 1.81e-12 |
| Natural Gas Prod. | Nickel cmpds | secondary | 8.87e-14 | 1.71e-12 |
| Fuel Oil #4 Prod. | Halogenated matter (organic) | secondary | 8.20e-14 | 1.58e-12 |
| Natural Gas Prod. | Mercury compounds | secondary | 3.98e-14 | 7.68e-13 |
| Fuel Oil #2 Prod. | Halogenated matter (organic) | secondary | 3.06e-14 | 5.89e-13 |
| Fuel Oil #6 Prod. | Halogenated matter (organic) | secondary | 2.69e-14 | 5.18e-13 |
| Natural Gas Prod. | Cyanide (-1) | secondary | 2.60e-14 | 5.02e-13 |
| Natural Gas Prod. | Halogenated matter (organic) | secondary | 7.44e-15 | 1.43e-13 |
| **Total Manufacturing** | | | 5.12e+00 | 9.88e+01 |

**Use, Maintenance and Repair Life-cycle Stage**

## Table M-38. LCD LCIA Results for the Aquatic Toxicity Impact Category

| Process Group | Material | LCI Data Type | Aquatic Toxicity (tox-kg) | % of Total |
|---|---|---|---|---|
| **Total Use, Maintenance and Repair** | | | **0.00e+00** | **0.00e+00** |
| **End-of-life Life-cycle Stage** | | | | |
| LCD landfilling | Ammonia | primary | 1.86e-05 | 3.58e-04 |
| LCD landfilling | Silver compounds | primary | 1.16e-06 | 2.23e-05 |
| LCD incineration | Silver compounds | secondary | 8.97e-07 | 1.73e-05 |
| LCD incineration | Cadmium cmpds | secondary | 3.51e-08 | 6.76e-07 |
| LCD landfilling | Cadmium cmpds | primary | 3.24e-08 | 6.24e-07 |
| LCD incineration | Barium cmpds | secondary | 2.08e-08 | 4.02e-07 |
| LCD landfilling | Barium cmpds | primary | 1.75e-08 | 3.38e-07 |
| LPG Production | Phenol | secondary | 1.67e-08 | 3.23e-07 |
| LPG Production | Aluminum (+3) | secondary | 9.68e-09 | 1.87e-07 |
| LCD incineration | Mercury compounds | secondary | 8.08e-09 | 1.56e-07 |
| LCD incineration | Arsenic cmpds | secondary | 7.75e-09 | 1.50e-07 |
| LCD landfilling | Mercury compounds | primary | 6.99e-09 | 1.35e-07 |
| LCD landfilling | Arsenic cmpds | primary | 6.59e-09 | 1.27e-07 |
| LCD incineration | Lead cmpds | secondary | 5.11e-09 | 9.85e-08 |
| LCD landfilling | Lead cmpds | primary | 4.73e-09 | 9.12e-08 |
| LCD incineration | Chromium (VI) | secondary | 3.40e-09 | 6.55e-08 |
| LCD landfilling | Chromium (VI) | primary | 2.72e-09 | 5.25e-08 |
| LCD incineration | Chromium (III) | secondary | 2.44e-09 | 4.70e-08 |
| LCD landfilling | Chromium (III) | primary | 1.95e-09 | 3.77e-08 |
| LCD landfilling | Xylene (mixed isomers) | primary | 1.01e-09 | 1.94e-08 |
| LCD landfilling | Toluene | primary | 5.68e-10 | 1.10e-08 |
| LPG Production | Nitrate | secondary | 4.77e-10 | 9.20e-09 |
| LCD incineration | o-xylene | secondary | 4.67e-10 | 9.01e-09 |
| LCD incineration | Toluene | secondary | 4.38e-10 | 8.45e-09 |
| LPG Production | Fluorides (F-) | secondary | 2.68e-10 | 5.17e-09 |
| LCD landfilling | Ethylbenzene | primary | 2.13e-10 | 4.12e-09 |
| LCD incineration | Ethylbenzene | secondary | 1.66e-10 | 3.19e-09 |
| LPG Production | Copper (+1 & +2) | secondary | 6.10e-11 | 1.18e-09 |
| LCD landfilling | Tetrachloroethylene | primary | 3.26e-11 | 6.28e-10 |
| LCD incineration | Selenium | secondary | 3.12e-11 | 6.02e-10 |
| LCD landfilling | Selenium | primary | 2.64e-11 | 5.09e-10 |
| LCD incineration | Tetrachloroethylene | secondary | 2.53e-11 | 4.87e-10 |
| LCD landfilling | Benzene | primary | 2.16e-11 | 4.17e-10 |
| LPG Production | Zinc (+2) | secondary | 1.71e-11 | 3.29e-10 |
| LCD incineration | Benzene | secondary | 1.68e-11 | 3.23e-10 |
| LCD landfilling | Carbon tetrachloride | primary | 1.32e-11 | 2.55e-10 |
| LCD incineration | Carbon tetrachloride | secondary | 1.03e-11 | 1.98e-10 |
| LCD landfilling | Trichloroethylene | primary | 9.99e-12 | 1.93e-10 |
| LCD incineration | Trichloroethylene | secondary | 7.75e-12 | 1.49e-10 |
| LCD landfilling | Chloroform | primary | 5.35e-12 | 1.03e-10 |
| LCD landfilling | Vinyl chloride | primary | 5.34e-12 | 1.03e-10 |
| LCD incineration | Chloroform | secondary | 4.15e-12 | 8.01e-11 |
| LCD incineration | Vinyl chloride | secondary | 4.14e-12 | 7.99e-11 |
| LCD landfilling | 1,2-Dichloroethane | primary | 2.81e-12 | 5.42e-11 |
| LCD incineration | 1,2-Dichloroethane | secondary | 2.18e-12 | 4.20e-11 |
| LCD landfilling | Dichloromethane | primary | 1.85e-12 | 3.57e-11 |
| LCD incineration | Dichloromethane | secondary | 1.44e-12 | 2.77e-11 |
| LPG Production | Aromatic hydrocarbons | secondary | 6.90e-13 | 1.33e-11 |

## Table M-38. LCD LCIA Results for the Aquatic Toxicity Impact Category

| Process Group | Material | LCI Data Type | Aquatic Toxicity (tox-kg) | % of Total |
|---|---|---|---|---|
| LPG Production | Barium cmpds | secondary | 5.60e-13 | 1.08e-11 |
| LPG Production | Chromium (VI) | secondary | 4.00e-13 | 7.71e-12 |
| LPG Production | Chromium (III) | secondary | 2.87e-13 | 5.53e-12 |
| LPG Production | Cadmium cmpds | secondary | 2.71e-13 | 5.23e-12 |
| LPG Production | Lead cmpds | secondary | 9.06e-14 | 1.75e-12 |
| LPG Production | Toluene | secondary | 8.42e-14 | 1.62e-12 |
| LPG Production | Nickel cmpds | secondary | 1.10e-14 | 2.11e-13 |
| LPG Production | Mercury compounds | secondary | 4.93e-15 | 9.50e-14 |
| LPG Production | Cyanide (-1) | secondary | 3.22e-15 | 6.20e-14 |
| LPG Production | Halogenated matter (organic) | secondary | 9.19e-16 | 1.77e-14 |
| Natural Gas Prod. | Halogenated matter (organic) | secondary | -1.56e-15 | -3.01e-14 |
| Natural Gas Prod. | Cyanide (-1) | secondary | -5.47e-15 | -1.05e-13 |
| Natural Gas Prod. | Mercury compounds | secondary | -8.37e-15 | -1.61e-13 |
| Natural Gas Prod. | Nickel cmpds | secondary | -1.86e-14 | -3.59e-13 |
| LCD incineration | Halogenated matter (organic) | secondary | -2.38e-14 | -4.59e-13 |
| LCD incineration | Cyanide (-1) | secondary | -8.33e-14 | -1.61e-12 |
| Natural Gas Prod. | Toluene | secondary | -1.43e-13 | -2.76e-12 |
| Natural Gas Prod. | Lead cmpds | secondary | -1.54e-13 | -2.97e-12 |
| LCD incineration | Nickel cmpds | secondary | -2.84e-13 | -5.47e-12 |
| Fuel Oil #4 Prod. | Halogenated matter (organic) | secondary | -3.78e-13 | -7.29e-12 |
| Natural Gas Prod. | Cadmium cmpds | secondary | -4.61e-13 | -8.88e-12 |
| Natural Gas Prod. | Barium cmpds | secondary | -9.51e-13 | -1.83e-11 |
| Natural Gas Prod. | Aromatic hydrocarbons | secondary | -1.17e-12 | -2.26e-11 |
| Fuel Oil #4 Prod. | Cyanide (-1) | secondary | -1.32e-12 | -2.55e-11 |
| Fuel Oil #4 Prod. | Mercury compounds | secondary | -2.02e-12 | -3.90e-11 |
| Fuel Oil #4 Prod. | Nickel cmpds | secondary | -4.51e-12 | -8.69e-11 |
| LCD incineration | Aromatic hydrocarbons | secondary | -1.78e-11 | -3.44e-10 |
| Fuel Oil #4 Prod. | Toluene | secondary | -3.46e-11 | -6.68e-10 |
| Fuel Oil #4 Prod. | Lead cmpds | secondary | -3.72e-11 | -7.18e-10 |
| Fuel Oil #4 Prod. | Chromium (III) | secondary | -6.81e-11 | -1.31e-09 |
| Fuel Oil #4 Prod. | Chromium (VI) | secondary | -9.50e-11 | -1.83e-09 |
| Natural Gas Prod. | Copper (+1 & +2) | secondary | -1.04e-10 | -2.00e-09 |
| Fuel Oil #4 Prod. | Cadmium cmpds | secondary | -1.11e-10 | -2.15e-09 |
| Fuel Oil #4 Prod. | Barium cmpds | secondary | -2.30e-10 | -4.44e-09 |
| Fuel Oil #4 Prod. | Aromatic hydrocarbons | secondary | -2.83e-10 | -5.47e-09 |
| Natural Gas Prod. | Chromium (III) | secondary | -7.28e-10 | -1.40e-08 |
| Natural Gas Prod. | Chromium (VI) | secondary | -1.01e-09 | -1.96e-08 |
| LCD incineration | Copper (+1 & +2) | secondary | -1.58e-09 | -3.04e-08 |
| LCD incineration | Zinc (+2) | secondary | -5.36e-09 | -1.03e-07 |
| Fuel Oil #4 Prod. | Zinc (+2) | secondary | -7.83e-09 | -1.51e-07 |
| Natural Gas Prod. | Nitrate | secondary | -9.96e-09 | -1.92e-07 |
| Natural Gas Prod. | Aluminum (+3) | secondary | -1.65e-08 | -3.17e-07 |
| Fuel Oil #4 Prod. | Copper (+1 & +2) | secondary | -2.51e-08 | -4.83e-07 |
| Natural Gas Prod. | Phenol | secondary | -2.86e-08 | -5.52e-07 |
| Natural Gas Prod. | Fluorides (F-) | secondary | -3.95e-08 | -7.61e-07 |
| Natural Gas Prod. | Zinc (+2) | secondary | -6.41e-08 | -1.24e-06 |
| Fuel Oil #4 Prod. | Fluorides (F-) | secondary | -1.62e-07 | -3.12e-06 |
| Fuel Oil #4 Prod. | Nitrate | secondary | -2.08e-07 | -4.02e-06 |
| LCD incineration | Aluminum (+3) | secondary | -2.51e-07 | -4.83e-06 |

## Table M-38. LCD LCIA Results for the Aquatic Toxicity Impact Category

| Process Group | Material | LCI Data Type | Aquatic Toxicity (tox-kg) | % of Total |
|---|---|---|---|---|
| LCD incineration | Phenol | secondary | -4.33e-07 | -8.36e-06 |
| LCD incineration | Nitrate | secondary | -2.33e-06 | -4.49e-05 |
| Fuel Oil #4 Prod. | Aluminum (+3) | secondary | -3.98e-06 | -7.68e-05 |
| Fuel Oil #4 Prod. | Phenol | secondary | -6.88e-06 | -1.33e-04 |
| LCD incineration | Fluorides (F-) | secondary | -9.81e-06 | -1.89e-04 |
| LCD incineration | Ammonia | secondary | -2.34e-04 | -4.51e-03 |
| **Total End-of-life** | | | **-2.37e-04** | **-4.58e-03** |
| **Total All Life-cycle Stages** | | | **5.19e+00** | **1.00e+02** |

## Table M-39. CRT LCIA Results for the Terrestrial Toxicity Impact Category

| Process Group | Material | LCI Data Type | Terrestrial Toxicity (tox-kg) | % of Total |
|---|---|---|---|---|
| **Materials Processing Life-cycle Stage** | | | | |
| Invar | Sulfur dioxide | secondary | 1.65e+02 | 8.35e+00 |
| Steel Prod., cold-rolled, semi-finished | Sulfur dioxide | secondary | 2.54e+01 | 1.28e+00 |
| Aluminum Prod. | Sulfur dioxide | secondary | 1.38e+01 | 6.99e-01 |
| Polycarbonate Production | Sulfur dioxide | secondary | 7.93e+00 | 4.02e-01 |
| Lead | Sulfur dioxide | secondary | 4.57e+00 | 2.32e-01 |
| ABS Production | Sulfur dioxide | secondary | 2.80e+00 | 1.42e-01 |
| Ferrite mfg. | Sulfur dioxide | secondary | 2.35e+00 | 1.19e-01 |
| Lead | Arsenic | secondary | 2.21e+00 | 1.12e-01 |
| Polystyrene Prod., high-impact | Sulfur dioxide | secondary | 1.20e+00 | 6.07e-02 |
| Aluminum Prod. | Titanium tetrachloride | secondary | 7.20e-01 | 3.65e-02 |
| Steel Prod., cold-rolled, semi-finished | Carbon monoxide | secondary | 2.78e-01 | 1.41e-02 |
| Invar | Titanium tetrachloride | secondary | 2.56e-01 | 1.30e-02 |
| Lead | Titanium tetrachloride | secondary | 2.10e-01 | 1.07e-02 |
| Aluminum Prod. | Manganese cmpds | secondary | 1.62e-01 | 8.20e-03 |
| Invar | Manganese cmpds | secondary | 1.50e-01 | 7.58e-03 |
| Aluminum Prod. | Vanadium | secondary | 1.07e-01 | 5.44e-03 |
| Steel Prod., cold-rolled, semi-finished | PM | secondary | 1.05e-01 | 5.31e-03 |
| Ferrite mfg. | Manganese cmpds | secondary | 9.39e-02 | 4.76e-03 |
| Invar | Vanadium | secondary | 7.40e-02 | 3.75e-03 |
| Invar | Carbon monoxide | secondary | 7.04e-02 | 3.56e-03 |
| Ferrite mfg. | Carbon monoxide | secondary | 5.85e-02 | 2.96e-03 |
| Steel Prod., cold-rolled, semi-finished | Vanadium | secondary | 5.15e-02 | 2.61e-03 |
| Aluminum Prod. | Arsenic cmpds | secondary | 4.75e-02 | 2.41e-03 |
| Lead | Manganese cmpds | secondary | 4.60e-02 | 2.33e-03 |
| Polycarbonate Production | Carbon monoxide | secondary | 4.15e-02 | 2.10e-03 |
| Invar | Arsenic | secondary | 3.21e-02 | 1.62e-03 |
| Ferrite mfg. | Arsenic | secondary | 2.90e-02 | 1.47e-03 |
| Lead | Zinc (elemental) | secondary | 2.42e-02 | 1.23e-03 |
| Ferrite mfg. | Titanium tetrachloride | secondary | 2.36e-02 | 1.20e-03 |
| Invar | Zinc (elemental) | secondary | 2.28e-02 | 1.15e-03 |
| Ferrite mfg. | Zinc (elemental) | secondary | 2.21e-02 | 1.12e-03 |
| Lead | Vanadium | secondary | 2.09e-02 | 1.06e-03 |
| Polycarbonate Production | Methane | secondary | 2.03e-02 | 1.03e-03 |
| ABS Production | Carbon monoxide | secondary | 2.01e-02 | 1.02e-03 |
| Polycarbonate Production | Nitrogen dioxide | secondary | 1.94e-02 | 9.82e-04 |
| Steel Prod., cold-rolled, semi-finished | Fluorides (F-) | secondary | 1.91e-02 | 9.68e-04 |
| Lead | Carbon monoxide | secondary | 1.89e-02 | 9.57e-04 |
| Aluminum Prod. | Carbon monoxide | secondary | 1.72e-02 | 8.74e-04 |
| Invar | Arsenic cmpds | secondary | 1.69e-02 | 8.55e-04 |
| Styrene-butadiene Copolymer Prod. | Carbon monoxide | secondary | 1.60e-02 | 8.12e-04 |
| Steel Prod., cold-rolled, semi-finished | Manganese cmpds | secondary | 1.49e-02 | 7.55e-04 |
| Ferrite mfg. | Vanadium | secondary | 1.45e-02 | 7.35e-04 |
| Steel Prod., cold-rolled, semi-finished | Nitrogen dioxide | secondary | 1.40e-02 | 7.09e-04 |
| Lead | Arsenic cmpds | secondary | 1.38e-02 | 6.99e-04 |
| Steel Prod., cold-rolled, semi-finished | Methane | secondary | 1.09e-02 | 5.52e-04 |
| Aluminum Prod. | Barium cmpds | secondary | 1.04e-02 | 5.29e-04 |
| Aluminum Prod. | PM | secondary | 8.90e-03 | 4.51e-04 |
| Aluminum Prod. | Methane | secondary | 8.05e-03 | 4.08e-04 |
| Aluminum Prod. | Nitrogen dioxide | secondary | 7.13e-03 | 3.61e-04 |

## Table M-39. CRT LCIA Results for the Terrestrial Toxicity Impact Category

| Process Group | Material | LCI Data Type | Terrestrial Toxicity (tox·kg) | % of Total |
|---|---|---|---|---|
| Styrene-butadiene Copolymer Prod. | Nitrogen oxides | secondary | 6.99e-03 | 3.54e-04 |
| Styrene-butadiene Copolymer Prod. | Methane | secondary | 6.87e-03 | 3.48e-04 |
| Polycarbonate Production | PM | secondary | 6.46e-03 | 3.27e-04 |
| Aluminum Prod. | Selenium | secondary | 6.29e-03 | 3.19e-04 |
| Invar | Methane | secondary | 5.76e-03 | 2.92e-04 |
| Styrene-butadiene Copolymer Prod. | Sulfur oxides | secondary | 5.71e-03 | 2.89e-04 |
| ABS Production | Methane | secondary | 5.08e-03 | 2.57e-04 |
| Invar | Nitrogen dioxide | secondary | 5.07e-03 | 2.57e-04 |
| ABS Production | Nitrogen dioxide | secondary | 4.66e-03 | 2.36e-04 |
| Steel Prod., cold-rolled, semi-finished | Arsenic | secondary | 4.52e-03 | 2.29e-04 |
| Invar | Barium cmpds | secondary | 4.31e-03 | 2.19e-04 |
| Lead | Nitrogen dioxide | secondary | 4.18e-03 | 2.12e-04 |
| Steel Prod., cold-rolled, semi-finished | Phosphorus (yellow or white) | secondary | 4.07e-03 | 2.06e-04 |
| ABS Production | Hydrochloric acid | secondary | 2.93e-03 | 1.48e-04 |
| Ferrite mfg. | Methane | secondary | 2.85e-03 | 1.45e-04 |
| Invar | PM | secondary | 2.76e-03 | 1.40e-04 |
| Lead | Barium cmpds | secondary | 2.71e-03 | 1.37e-04 |
| Lead | Methane | secondary | 2.52e-03 | 1.28e-04 |
| Invar | Selenium | secondary | 2.32e-03 | 1.18e-04 |
| Polystyrene Prod., high-impact | Carbon monoxide | secondary | 2.27e-03 | 1.15e-04 |
| Steel Prod., cold-rolled, semi-finished | Hydrochloric acid | secondary | 2.05e-03 | 1.04e-04 |
| Ferrite mfg. | Nitrogen dioxide | secondary | 2.03e-03 | 1.03e-04 |
| Invar | Hydrochloric acid | secondary | 1.85e-03 | 9.38e-05 |
| Lead | Selenium | secondary | 1.84e-03 | 9.30e-05 |
| Polystyrene Prod., high-impact | Nitrogen dioxide | secondary | 1.81e-03 | 9.19e-05 |
| Aluminum Prod. | Hydrochloric acid | secondary | 1.78e-03 | 9.04e-05 |
| Steel Prod., cold-rolled, semi-finished | Benzene | secondary | 1.76e-03 | 8.91e-05 |
| Steel Prod., cold-rolled, semi-finished | Barium cmpds | secondary | 1.73e-03 | 8.77e-05 |
| Ferrite mfg. | PM | secondary | 1.72e-03 | 8.72e-05 |
| Polystyrene Prod., high-impact | Methane | secondary | 1.66e-03 | 8.42e-05 |
| Ferrite mfg. | Arsenic cmpds | secondary | 1.64e-03 | 8.30e-05 |
| ABS Production | Formaldehyde | secondary | 1.60e-03 | 8.11e-05 |
| Aluminum Prod. | Aluminum (+3) | secondary | 1.59e-03 | 8.04e-05 |
| Lead | Lead | secondary | 1.58e-03 | 8.01e-05 |
| Steel Prod., cold-rolled, semi-finished | Arsenic cmpds | secondary | 1.54e-03 | 7.78e-05 |
| ABS Production | PM | secondary | 1.27e-03 | 6.44e-05 |
| Aluminum Prod. | Cadmium cmpds | secondary | 1.17e-03 | 5.93e-05 |
| Lead | Hydrochloric acid | secondary | 1.07e-03 | 5.42e-05 |
| Styrene-butadiene Copolymer Prod. | PM | secondary | 9.93e-04 | 5.03e-05 |
| Invar | Copper | secondary | 9.89e-04 | 5.01e-05 |
| Invar | Benzene | secondary | 9.17e-04 | 4.65e-05 |
| Lead | PM | secondary | 8.41e-04 | 4.26e-05 |
| Steel Prod., cold-rolled, semi-finished | Titanium tetrachloride | secondary | 8.33e-04 | 4.22e-05 |
| Steel Prod., cold-rolled, semi-finished | Ammonia | secondary | 7.99e-04 | 4.05e-05 |
| Ferrite mfg. | Barium cmpds | secondary | 7.81e-04 | 3.96e-05 |
| Steel Prod., cold-rolled, semi-finished | Nitrous oxide | secondary | 7.77e-04 | 3.94e-05 |
| Ferrite mfg. | Hydrochloric acid | secondary | 6.93e-04 | 3.51e-05 |
| Ferrite mfg. | Benzene | secondary | 5.85e-04 | 2.97e-05 |
| Invar | Aluminum (+3) | secondary | 5.70e-04 | 2.89e-05 |
| Aluminum Prod. | Benzene | secondary | 5.69e-04 | 2.88e-05 |

## Table M-39. CRT LCIA Results for the Terrestrial Toxicity Impact Category

| Process Group | Material | LCI Data Type | Terrestrial Toxicity (tox-kg) | % of Total |
|---|---|---|---|---|
| Steel Prod., cold-rolled, semi-finished | Silicon | secondary | 5.06e-04 | 2.56e-05 |
| Polycarbonate Production | Hydrochloric acid | secondary | 4.65e-04 | 2.36e-05 |
| Lead | Aluminum (+3) | secondary | 4.62e-04 | 2.34e-05 |
| Aluminum Prod. | Barium sulfate | secondary | 4.54e-04 | 2.30e-05 |
| Steel Prod., cold-rolled, semi-finished | Formaldehyde | secondary | 4.15e-04 | 2.10e-05 |
| Steel Prod., cold-rolled, semi-finished | Titanium | secondary | 3.26e-04 | 1.65e-05 |
| Polycarbonate Production | Sulfuric acid | secondary | 3.17e-04 | 1.61e-05 |
| Polystyrene Prod., high-impact | PM | secondary | 3.02e-04 | 1.53e-05 |
| Steel Prod., cold-rolled, semi-finished | Selenium | secondary | 3.00e-04 | 1.52e-05 |
| Lead | Benzene | secondary | 2.99e-04 | 1.51e-05 |
| Invar | Phosphorus (yellow or white) | secondary | 2.89e-04 | 1.46e-05 |
| Ferrite mfg. | Selenium | secondary | 2.86e-04 | 1.45e-05 |
| Ferrite mfg. | Phosphorus (yellow or white) | secondary | 2.85e-04 | 1.44e-05 |
| Steel Prod., cold-rolled, semi-finished | Ethane | secondary | 2.46e-04 | 1.25e-05 |
| ABS Production | Hydrofluoric acid | secondary | 2.44e-04 | 1.23e-05 |
| Polycarbonate Production | Mercury compounds | secondary | 2.43e-04 | 1.23e-05 |
| Aluminum Prod. | Hydrofluoric acid | secondary | 2.40e-04 | 1.22e-05 |
| Aluminum Prod. | Zinc (elemental) | secondary | 2.30e-04 | 1.16e-05 |
| Aluminum Prod. | Titanium | secondary | 2.28e-04 | 1.15e-05 |
| Invar | Silicon | secondary | 2.26e-04 | 1.15e-05 |
| Steel Prod., cold-rolled, semi-finished | Zinc (elemental) | secondary | 2.16e-04 | 1.10e-05 |
| Invar | Titanium | secondary | 2.13e-04 | 1.08e-05 |
| ABS Production | Ammonia | secondary | 1.94e-04 | 9.82e-06 |
| ABS Production | Aromatic hydrocarbons | secondary | 1.91e-04 | 9.65e-06 |
| Steel Prod., cold-rolled, semi-finished | Molybdenum | secondary | 1.88e-04 | 9.51e-06 |
| Aluminum Prod. | Copper (+1 & +2) | secondary | 1.80e-04 | 9.12e-06 |
| Invar | Formaldehyde | secondary | 1.60e-04 | 8.11e-06 |
| Ferrite mfg. | Formaldehyde | secondary | 1.56e-04 | 7.92e-06 |
| Invar | Molybdenum | secondary | 1.52e-04 | 7.70e-06 |
| Ferrite mfg. | Silicon | secondary | 1.48e-04 | 7.52e-06 |
| ABS Production | Sulfuric acid | secondary | 1.45e-04 | 7.37e-06 |
| Styrene-butadiene Copolymer Prod. | Sulfuric acid | secondary | 1.42e-04 | 7.20e-06 |
| Aluminum Prod. | Nitrous oxide | secondary | 1.38e-04 | 7.00e-06 |
| Aluminum Prod. | Perfluoromethane | secondary | 1.30e-04 | 6.57e-06 |
| Invar | Cadmium cmpds | secondary | 1.27e-04 | 6.43e-06 |
| Steel Prod., cold-rolled, semi-finished | Barium | secondary | 1.23e-04 | 6.23e-06 |
| Invar | Nitrates/nitrites | secondary | 1.21e-04 | 6.11e-06 |
| ABS Production | Ethane | secondary | 1.19e-04 | 6.01e-06 |
| Lead | Barium sulfate | secondary | 1.15e-04 | 5.81e-06 |
| ABS Production | Mercury compounds | secondary | 1.11e-04 | 5.65e-06 |
| Aluminum Prod. | Silicon | secondary | 1.09e-04 | 5.54e-06 |
| Styrene-butadiene Copolymer Prod. | Mercury compounds | secondary | 1.09e-04 | 5.52e-06 |
| Steel Prod., cold-rolled, semi-finished | Tin (Sn++, Sn4+) | secondary | 1.04e-04 | 5.28e-06 |
| Steel Prod., cold-rolled, semi-finished | Antimony | secondary | 9.51e-05 | 4.82e-06 |
| Invar | Copper (+1 & +2) | secondary | 9.43e-05 | 4.78e-06 |
| Polycarbonate Production | Fluorides (F-) | secondary | 9.16e-05 | 4.64e-06 |
| Ferrite mfg. | Titanium | secondary | 9.12e-05 | 4.62e-06 |
| Invar | Ethane | secondary | 8.26e-05 | 4.18e-06 |
| Polycarbonate Production | Aromatic hydrocarbons | secondary | 8.22e-05 | 4.16e-06 |
| Ferrite mfg. | Ethane | secondary | 8.06e-05 | 4.09e-06 |

## Table M-39. CRT LCIA Results for the Terrestrial Toxicity Impact Category

| Process Group | Material | LCI Data Type | Terrestrial Toxicity (tox-kg) | % of Total |
|---|---|---|---|---|
| Lead | Silicon | secondary | 7.13e-05 | 3.61e-06 |
| Styrene-butadiene Copolymer Prod. | Hydrochloric acid | secondary | 6.82e-05 | 3.46e-06 |
| Styrene-butadiene Copolymer Prod. | Aromatic hydrocarbons | secondary | 6.79e-05 | 3.44e-06 |
| Invar | Nickel | secondary | 6.54e-05 | 3.31e-06 |
| Invar | Barium | secondary | 6.53e-05 | 3.31e-06 |
| Steel Prod., cold-rolled, semi-finished | Silver compounds | secondary | 6.17e-05 | 3.13e-06 |
| Ferrite mfg. | Aluminum (+3) | secondary | 5.58e-05 | 2.82e-06 |
| Ferrite mfg. | Molybdenum | secondary | 5.23e-05 | 2.65e-06 |
| Lead | Copper (+1 & +2) | secondary | 5.20e-05 | 2.64e-06 |
| ABS Production | Aluminum (+3) | secondary | 5.08e-05 | 2.57e-06 |
| Steel Prod., cold-rolled, semi-finished | Nitrates/nitrites | secondary | 4.99e-05 | 2.53e-06 |
| Steel Prod., cold-rolled, semi-finished | Boron | secondary | 4.93e-05 | 2.50e-06 |
| Aluminum Prod. | Nitrate | secondary | 4.56e-05 | 2.31e-06 |
| Steel Prod., cold-rolled, semi-finished | Mercury compounds | secondary | 4.52e-05 | 2.29e-06 |
| Styrene-butadiene Copolymer Prod. | Fluorides (F-) | secondary | 4.10e-05 | 2.08e-06 |
| Aluminum Prod. | Barium | secondary | 3.91e-05 | 1.98e-06 |
| Ferrite mfg. | Barium | secondary | 3.73e-05 | 1.89e-06 |
| Invar | Lead | secondary | 3.62e-05 | 1.83e-06 |
| Ferrite mfg. | Lead | secondary | 3.46e-05 | 1.75e-06 |
| Invar | Barium sulfate | secondary | 3.46e-05 | 1.75e-06 |
| Steel Prod., cold-rolled, semi-finished | Barium sulfate | secondary | 3.43e-05 | 1.74e-06 |
| Ferrite mfg. | Barium sulfate | secondary | 3.38e-05 | 1.71e-06 |
| Invar | Ammonia | secondary | 3.16e-05 | 1.60e-06 |
| Lead | Ethane | secondary | 3.16e-05 | 1.60e-06 |
| Invar | Tin (Sn++, Sn4+) | secondary | 3.04e-05 | 1.54e-06 |
| Polystyrene Prod., high-impact | Aromatic hydrocarbons | secondary | 3.02e-05 | 1.53e-06 |
| ABS Production | Nitrate | secondary | 3.01e-05 | 1.52e-06 |
| Lead | Barium | secondary | 2.88e-05 | 1.46e-06 |
| Lead | Copper | secondary | 2.82e-05 | 1.43e-06 |
| Invar | Boron | secondary | 2.79e-05 | 1.41e-06 |
| Steel Prod., cold-rolled, semi-finished | Cadmium cmpds | secondary | 2.70e-05 | 1.37e-06 |
| Invar | Antimony | secondary | 2.69e-05 | 1.37e-06 |
| Invar | Hydrofluoric acid | secondary | 2.69e-05 | 1.36e-06 |
| Ferrite mfg. | Antimony | secondary | 2.63e-05 | 1.33e-06 |
| Steel Prod., cold-rolled, semi-finished | Aluminum (elemental) | secondary | 2.47e-05 | 1.25e-06 |
| Invar | Zinc (+2) | secondary | 2.44e-05 | 1.23e-06 |
| Polystyrene Prod., high-impact | Hydrochloric acid | secondary | 2.42e-05 | 1.23e-06 |
| Aluminum Prod. | Copper | secondary | 2.38e-05 | 1.21e-06 |
| Steel Prod., cold-rolled, semi-finished | Acetylene | secondary | 2.33e-05 | 1.18e-06 |
| Lead | Nitrous oxide | secondary | 2.03e-05 | 1.03e-06 |
| Aluminum Prod. | Nickel cmpds | secondary | 1.91e-05 | 9.65e-07 |
| Steel Prod., cold-rolled, semi-finished | Hydrofluoric acid | secondary | 1.89e-05 | 9.59e-07 |
| Invar | Silver compounds | secondary | 1.86e-05 | 9.44e-07 |
| Ferrite mfg. | Zinc (+2) | secondary | 1.84e-05 | 9.34e-07 |
| Ferrite mfg. | Silver compounds | secondary | 1.82e-05 | 9.22e-07 |
| Aluminum Prod. | Nickel | secondary | 1.78e-05 | 9.00e-07 |
| Aluminum Prod. | Zinc (+2) | secondary | 1.74e-05 | 8.83e-07 |
| Steel Prod., cold-rolled, semi-finished | Pentane | secondary | 1.70e-05 | 8.59e-07 |
| Steel Prod., cold-rolled, semi-finished | Aluminum (+3) | secondary | 1.58e-05 | 7.98e-07 |
| Aluminum Prod. | Ammonia | secondary | 1.55e-05 | 7.84e-07 |

## Table M-39. CRT LCIA Results for the Terrestrial Toxicity Impact Category

| Process Group | Material | LCI Data Type | Terrestrial Toxicity (tox-kg) | % of Total |
|---|---|---|---|---|
| Invar | Aluminum (elemental) | secondary | 1.52e-05 | 7.72e-07 |
| Invar | Nickel cmpds | secondary | 1.51e-05 | 7.66e-07 |
| Ferrite mfg. | Boron | secondary | 1.48e-05 | 7.51e-07 |
| Aluminum Prod. | Aromatic hydrocarbons | secondary | 1.41e-05 | 7.17e-07 |
| Lead | Hydrofluoric acid | secondary | 1.36e-05 | 6.91e-07 |
| Steel Prod., cold-rolled, semi-finished | Hydrogen sulfide | secondary | 1.36e-05 | 6.88e-07 |
| Aluminum Prod. | Nitrites | secondary | 1.35e-05 | 6.85e-07 |
| Steel Prod., cold-rolled, semi-finished | Copper | secondary | 1.22e-05 | 6.19e-07 |
| Lead | Ammonia | secondary | 1.19e-05 | 6.01e-07 |
| Ferrite mfg. | Nitrous oxide | secondary | 1.06e-05 | 5.38e-07 |
| Aluminum Prod. | Aluminum (elemental) | secondary | 1.05e-05 | 5.33e-07 |
| Polycarbonate Production | Copper (+1 & +2) | secondary | 1.04e-05 | 5.25e-07 |
| Ferrite mfg. | Ammonia | secondary | 1.03e-05 | 5.19e-07 |
| ABS Production | Hydrogen sulfide | secondary | 1.01e-05 | 5.13e-07 |
| Aluminum Prod. | Strontium (Sr II) | secondary | 1.00e-05 | 5.06e-07 |
| Lead | Boron | secondary | 9.53e-06 | 4.83e-07 |
| Polycarbonate Production | Phenol | secondary | 9.34e-06 | 4.73e-07 |
| Aluminum Prod. | Fluoride | secondary | 9.10e-06 | 4.61e-07 |
| Lead | Nitrate | secondary | 9.00e-06 | 4.56e-07 |
| Invar | Pentane | secondary | 8.97e-06 | 4.55e-07 |
| Ferrite mfg. | Pentane | secondary | 8.76e-06 | 4.44e-07 |
| Aluminum Prod. | Lead cmpds | secondary | 8.72e-06 | 4.42e-07 |
| Steel Prod., cold-rolled, semi-finished | Copper (+1 & +2) | secondary | 8.59e-06 | 4.35e-07 |
| Invar | Aromatic hydrocarbons | secondary | 8.36e-06 | 4.23e-07 |
| Lead | Aluminum (elemental) | secondary | 8.16e-06 | 4.13e-07 |
| Steel Prod., cold-rolled, semi-finished | Nickel | secondary | 8.14e-06 | 4.13e-07 |
| Aluminum Prod. | Vanadium (V3+, V5+) | secondary | 8.14e-06 | 4.13e-07 |
| Ferrite mfg. | Aluminum (elemental) | secondary | 7.77e-06 | 3.93e-07 |
| Invar | Hydrogen sulfide | secondary | 7.26e-06 | 3.68e-07 |
| Steel Prod., cold-rolled, semi-finished | Aromatic hydrocarbons | secondary | 7.17e-06 | 3.63e-07 |
| Invar | Acetylene | secondary | 6.61e-06 | 3.35e-07 |
| Ferrite mfg. | Acetylene | secondary | 6.46e-06 | 3.27e-07 |
| Ferrite mfg. | Hydrofluoric acid | secondary | 6.37e-06 | 3.23e-07 |
| Ferrite mfg. | Copper (+1 & +2) | secondary | 5.96e-06 | 3.02e-07 |
| Invar | Nitrites | secondary | 5.95e-06 | 3.01e-07 |
| Ferrite mfg. | Cadmium cmpds | secondary | 5.94e-06 | 3.01e-07 |
| Lead | Nickel cmpds | secondary | 5.60e-06 | 2.83e-07 |
| Invar | Strontium (Sr II) | secondary | 5.18e-06 | 2.62e-07 |
| Ferrite mfg. | Hydrogen sulfide | secondary | 5.17e-06 | 2.62e-07 |
| ABS Production | Heptane | secondary | 5.02e-06 | 2.54e-07 |
| Lead | Zinc (+2) | secondary | 4.96e-06 | 2.51e-07 |
| Aluminum Prod. | Molybdenum (Mo II, Mo III, Mo IV, Mo V, Mo VI) | secondary | 4.94e-06 | 2.50e-07 |
| ABS Production | Copper (+1 & +2) | secondary | 4.75e-06 | 2.41e-07 |
| Lead | Nickel | secondary | 4.72e-06 | 2.39e-07 |
| Steel Prod., cold-rolled, semi-finished | Strontium (Sr II) | secondary | 4.67e-06 | 2.37e-07 |
| Styrene-butadiene Copolymer Prod. | Copper (+1 & +2) | secondary | 4.64e-06 | 2.35e-07 |
| Ferrite mfg. | Copper | secondary | 4.55e-06 | 2.31e-07 |
| Lead | Fluoride | secondary | 4.46e-06 | 2.26e-07 |
| Steel Prod., cold-rolled, semi-finished | Hexane | secondary | 4.43e-06 | 2.24e-07 |

## Table M-39. CRT LCIA Results for the Terrestrial Toxicity Impact Category

| Process Group | Material | LCI Data Type | Terrestrial Toxicity (tox-kg) | % of Total |
|---|---|---|---|---|
| Invar | Fluoride | secondary | 4.40e-06 | 2.23e-07 |
| Ferrite mfg. | Nitrate | secondary | 4.04e-06 | 2.05e-07 |
| Lead | Cadmium | secondary | 3.98e-06 | 2.02e-07 |
| Aluminum Prod. | Hydrogen sulfide | secondary | 3.77e-06 | 1.91e-07 |
| Polycarbonate Production | Ammonia | secondary | 3.70e-06 | 1.87e-07 |
| Polycarbonate Production | Hydrofluoric acid | secondary | 3.69e-06 | 1.87e-07 |
| Steel Prod., cold-rolled, semi-finished | Chromium (VI) | secondary | 3.30e-06 | 1.67e-07 |
| Invar | Vanadium (V3+, V5+) | secondary | 3.00e-06 | 1.52e-07 |
| Invar | Lead cmpds | secondary | 2.98e-06 | 1.51e-07 |
| Lead | Hydrogen sulfide | secondary | 2.96e-06 | 1.50e-07 |
| Styrene-butadiene Copolymer Prod. | Nitrate | secondary | 2.90e-06 | 1.47e-07 |
| Lead | Nitrites | secondary | 2.86e-06 | 1.45e-07 |
| Lead | Lead cmpds | secondary | 2.75e-06 | 1.39e-07 |
| Lead | Vanadium (V3+, V5+) | secondary | 2.37e-06 | 1.20e-07 |
| Ferrite mfg. | Nickel | secondary | 2.30e-06 | 1.16e-07 |
| Ferrite mfg. | Aromatic hydrocarbons | secondary | 2.26e-06 | 1.15e-07 |
| Steel Prod., cold-rolled, semi-finished | Boric acid | secondary | 2.17e-06 | 1.10e-07 |
| Steel Prod., cold-rolled, semi-finished | Bromine | secondary | 2.03e-06 | 1.03e-07 |
| Lead | Strontium (Sr II) | secondary | 2.00e-06 | 1.01e-07 |
| Invar | Methanol | secondary | 1.87e-06 | 9.45e-08 |
| Polycarbonate Production | Halogenated hydrocarbons (unspecified) | secondary | 1.85e-06 | 9.36e-08 |
| Polycarbonate Production | Hydrogen sulfide | secondary | 1.85e-06 | 9.36e-08 |
| Aluminum Prod. | Toluene | secondary | 1.81e-06 | 9.18e-08 |
| Invar | Molybdenum (Mo II, Mo III, Mo IV, Mo V, Mo VI) | secondary | 1.72e-06 | 8.73e-08 |
| Steel Prod., cold-rolled, semi-finished | Uranium | secondary | 1.68e-06 | 8.53e-08 |
| Polystyrene Prod., high-impact | Ammonia | secondary | 1.62e-06 | 8.18e-08 |
| Steel Prod., cold-rolled, semi-finished | Toluene | secondary | 1.52e-06 | 7.69e-08 |
| Ferrite mfg. | Strontium (Sr II) | secondary | 1.52e-06 | 7.68e-08 |
| Lead | Mercury | secondary | 1.51e-06 | 7.66e-08 |
| Lead | Molybdenum (Mo II, Mo III, Mo IV, Mo V, Mo VI) | secondary | 1.49e-06 | 7.57e-08 |
| Invar | Cobalt (Co I, Co II, Co III) | secondary | 1.44e-06 | 7.31e-08 |
| Aluminum Prod. | Xylene (mixed isomers) | secondary | 1.38e-06 | 6.98e-08 |
| Invar | Hexane | secondary | 1.29e-06 | 6.52e-08 |
| Ferrite mfg. | Hexane | secondary | 1.26e-06 | 6.37e-08 |
| Invar | Boron (B III) | secondary | 1.26e-06 | 6.36e-08 |
| Invar | Benzo[a]pyrene | secondary | 1.23e-06 | 6.23e-08 |
| Steel Prod., cold-rolled, semi-finished | Ethylene | secondary | 1.23e-06 | 6.22e-08 |
| Steel Prod., cold-rolled, semi-finished | Cyanide (-1) | secondary | 1.21e-06 | 6.11e-08 |
| Aluminum Prod. | Lead | secondary | 1.20e-06 | 6.08e-08 |
| Steel Prod., cold-rolled, semi-finished | Methanol | secondary | 1.19e-06 | 6.04e-08 |
| Invar | Cadmium | secondary | 1.18e-06 | 5.97e-08 |
| Steel Prod., cold-rolled, semi-finished | Xylene (mixed isomers) | secondary | 1.12e-06 | 5.68e-08 |
| Steel Prod., cold-rolled, semi-finished | Lead | secondary | 1.10e-06 | 5.58e-08 |
| Steel Prod., cold-rolled, semi-finished | Naphthalene | secondary | 1.10e-06 | 5.57e-08 |
| Invar | Toluene | secondary | 1.10e-06 | 5.57e-08 |
| Lead | Bromine | secondary | 1.08e-06 | 5.46e-08 |
| Ferrite mfg. | Cadmium | secondary | 9.76e-07 | 4.95e-08 |
| Steel Prod., cold-rolled, semi-finished | Phenol | secondary | 9.70e-07 | 4.91e-08 |
| Steel Prod., cold-rolled, semi-finished | Heptane | secondary | 9.33e-07 | 4.73e-08 |

## Table M-39. CRT LCIA Results for the Terrestrial Toxicity Impact Category

| Process Group | Material | LCI Data Type | Terrestrial Toxicity (tox-kg) | % of Total |
|---|---|---|---|---|
| Invar | Chromium (VI) | secondary | 9.25e-07 | 4.69e-08 |
| Polycarbonate Production | Chlorine | secondary | 9.23e-07 | 4.68e-08 |
| Ferrite mfg. | Fluoride | secondary | 9.23e-07 | 4.68e-08 |
| Lead | Cobalt (Co I, Co II, Co III) | secondary | 9.18e-07 | 4.65e-08 |
| Aluminum Prod. | Chromium (VI) | secondary | 8.90e-07 | 4.51e-08 |
| Steel Prod., cold-rolled, semi-finished | Lead cmpds | secondary | 8.83e-07 | 4.47e-08 |
| Lead | Manganese | secondary | 8.47e-07 | 4.29e-08 |
| Styrene-butadiene Copolymer Prod. | Aluminum (+3) | secondary | 8.27e-07 | 4.19e-08 |
| Ferrite mfg. | Nickel cmpds | secondary | 7.97e-07 | 4.04e-08 |
| Lead | Mercury compounds | secondary | 7.88e-07 | 3.99e-08 |
| Invar | Xylene (mixed isomers) | secondary | 7.67e-07 | 3.89e-08 |
| Lead | Boron (B III) | secondary | 7.54e-07 | 3.82e-08 |
| Invar | Bromium (Br) | secondary | 7.09e-07 | 3.59e-08 |
| Ferrite mfg. | Bromine | secondary | 6.92e-07 | 3.50e-08 |
| Aluminum Prod. | Phenol | secondary | 6.39e-07 | 3.24e-08 |
| ABS Production | Chlorine | secondary | 6.35e-07 | 3.22e-08 |
| Invar | Manganese | secondary | 6.32e-07 | 3.20e-08 |
| Invar | Boric acid | secondary | 6.13e-07 | 3.11e-08 |
| Invar | Ethylene | secondary | 6.01e-07 | 3.04e-08 |
| Ferrite mfg. | Boric acid | secondary | 5.99e-07 | 3.03e-08 |
| Steel Prod., cold-rolled, semi-finished | Nickel cmpds | secondary | 5.96e-07 | 3.02e-08 |
| ABS Production | Phenol | secondary | 5.88e-07 | 2.98e-08 |
| Ferrite mfg. | Ethylene | secondary | 5.79e-07 | 2.93e-08 |
| Ferrite mfg. | Toluene | secondary | 5.31e-07 | 2.69e-08 |
| Steel Prod., cold-rolled, semi-finished | Zinc (+2) | secondary | 5.30e-07 | 2.69e-08 |
| Ferrite mfg. | Lead cmpds | secondary | 5.19e-07 | 2.63e-08 |
| ABS Production | Nickel cmpds | secondary | 5.04e-07 | 2.55e-08 |
| Styrene-butadiene Copolymer Prod. | Phenol | secondary | 4.92e-07 | 2.49e-08 |
| Invar | Uranium | secondary | 4.81e-07 | 2.44e-08 |
| Ferrite mfg. | Uranium | secondary | 4.69e-07 | 2.38e-08 |
| Polycarbonate Production | Aluminum (+3) | secondary | 4.62e-07 | 2.34e-08 |
| Polycarbonate Production | Ethanethiol | secondary | 4.62e-07 | 2.34e-08 |
| Polycarbonate Production | Lead | secondary | 4.62e-07 | 2.34e-08 |
| Polycarbonate Production | Mercury | secondary | 4.62e-07 | 2.34e-08 |
| Polycarbonate Production | Nickel (+2) | secondary | 4.62e-07 | 2.34e-08 |
| Polycarbonate Production | Nitrate | secondary | 4.62e-07 | 2.34e-08 |
| Polycarbonate Production | Nitrous oxide | secondary | 4.62e-07 | 2.34e-08 |
| Polycarbonate Production | Zinc (+2) | secondary | 4.62e-07 | 2.34e-08 |
| Invar | Phenol | secondary | 4.41e-07 | 2.23e-08 |
| Aluminum Prod. | Acetic acid | secondary | 4.22e-07 | 2.14e-08 |
| Ferrite mfg. | Chromium (VI) | secondary | 4.17e-07 | 2.11e-08 |
| Styrene-butadiene Copolymer Prod. | Chlorine | secondary | 4.14e-07 | 2.10e-08 |
| Styrene-butadiene Copolymer Prod. | Hydrofluoric acid | secondary | 4.14e-07 | 2.10e-08 |
| Ferrite mfg. | Nitrites | secondary | 4.13e-07 | 2.09e-08 |
| Aluminum Prod. | Cobalt | secondary | 4.11e-07 | 2.08e-08 |
| Steel Prod., cold-rolled, semi-finished | Cobalt | secondary | 4.05e-07 | 2.05e-08 |
| Lead | Chromium (VI) | secondary | 3.70e-07 | 1.88e-08 |
| Steel Prod., cold-rolled, semi-finished | Manganese | secondary | 3.60e-07 | 1.82e-08 |
| Styrene-butadiene Copolymer Prod. | Ammonia | secondary | 3.55e-07 | 1.80e-08 |
| Ferrite mfg. | Xylene (mixed isomers) | secondary | 3.50e-07 | 1.77e-08 |

## Table M-39. CRT LCIA Results for the Terrestrial Toxicity Impact Category

| Process Group | Material | LCI Data Type | Terrestrial Toxicity (tox-kg) | % of Total |
|---|---|---|---|---|
| Invar | Acetic acid | secondary | 3.50e-07 | 1.77e-08 |
| Ferrite mfg. | Vanadium (V3+, V5+) | secondary | 3.42e-07 | 1.73e-08 |
| Ferrite mfg. | Methanol | secondary | 3.36e-07 | 1.70e-08 |
| Polystyrene Prod., high-impact | Nitrate | secondary | 3.02e-07 | 1.53e-08 |
| Steel Prod., cold-rolled, semi-finished | Vanadium (V3+, V5+) | secondary | 2.97e-07 | 1.50e-08 |
| Aluminum Prod. | Cadmium | secondary | 2.95e-07 | 1.50e-08 |
| Invar | Cyanide (-1) | secondary | 2.89e-07 | 1.46e-08 |
| Invar | Heptane | secondary | 2.83e-07 | 1.43e-08 |
| Ferrite mfg. | Heptane | secondary | 2.76e-07 | 1.40e-08 |
| Steel Prod., cold-rolled, semi-finished | Boron (B III) | secondary | 2.70e-07 | 1.37e-08 |
| Invar | Acetaldehyde | secondary | 2.64e-07 | 1.34e-08 |
| ABS Production | HALON-1301 | secondary | 2.56e-07 | 1.30e-08 |
| Lead | Xylene (mixed isomers) | secondary | 2.54e-07 | 1.29e-08 |
| Aluminum Prod. | Triethylene glycol | secondary | 2.42e-07 | 1.23e-08 |
| Invar | Mercury | secondary | 2.12e-07 | 1.08e-08 |
| ABS Production | Ethanethiol | secondary | 2.12e-07 | 1.07e-08 |
| ABS Production | Fluoride | secondary | 2.12e-07 | 1.07e-08 |
| ABS Production | Halogenated hydrocarbons (unspecified) | secondary | 2.12e-07 | 1.07e-08 |
| ABS Production | Lead | secondary | 2.12e-07 | 1.07e-08 |
| ABS Production | Mercury | secondary | 2.12e-07 | 1.07e-08 |
| ABS Production | Nitrous oxide | secondary | 2.12e-07 | 1.07e-08 |
| ABS Production | Zinc (+2) | secondary | 2.12e-07 | 1.07e-08 |
| Styrene-butadiene Copolymer Prod. | Halogenated hydrocarbons (unspecified) | secondary | 2.07e-07 | 1.05e-08 |
| Styrene-butadiene Copolymer Prod. | Hydrogen sulfide | secondary | 2.07e-07 | 1.05e-08 |
| Styrene-butadiene Copolymer Prod. | Lead | secondary | 2.07e-07 | 1.05e-08 |
| Styrene-butadiene Copolymer Prod. | Mercury | secondary | 2.07e-07 | 1.05e-08 |
| Styrene-butadiene Copolymer Prod. | Nickel (+2) | secondary | 2.07e-07 | 1.05e-08 |
| Styrene-butadiene Copolymer Prod. | Nitrous oxide | secondary | 2.07e-07 | 1.05e-08 |
| Styrene-butadiene Copolymer Prod. | Zinc (+2) | secondary | 2.07e-07 | 1.05e-08 |
| Ferrite mfg. | Cyanide (-1) | secondary | 2.05e-07 | 1.04e-08 |
| Steel Prod., cold-rolled, semi-finished | Acetic acid | secondary | 2.05e-07 | 1.04e-08 |
| Aluminum Prod. | Mercury | secondary | 2.02e-07 | 1.02e-08 |
| Ferrite mfg. | Phenol | secondary | 1.95e-07 | 9.90e-09 |
| Invar | Triethylene glycol | secondary | 1.93e-07 | 9.77e-09 |
| Steel Prod., cold-rolled, semi-finished | Triethylene glycol | secondary | 1.92e-07 | 9.70e-09 |
| Aluminum Prod. | Cyanide (-1) | secondary | 1.89e-07 | 9.60e-09 |
| Ferrite mfg. | Triethylene glycol | secondary | 1.88e-07 | 9.54e-09 |
| Lead | Triethylene glycol | secondary | 1.81e-07 | 9.18e-09 |
| Aluminum Prod. | HALON-1301 | secondary | 1.80e-07 | 9.14e-09 |
| Polystyrene Prod., high-impact | Phenol | secondary | 1.80e-07 | 9.11e-09 |
| Steel Prod., cold-rolled, semi-finished | Morpholine | secondary | 1.79e-07 | 9.08e-09 |
| Steel Prod., cold-rolled, semi-finished | Strontium | secondary | 1.77e-07 | 8.98e-09 |
| Steel Prod., cold-rolled, semi-finished | Propylene | secondary | 1.77e-07 | 8.97e-09 |
| Steel Prod., cold-rolled, semi-finished | Cadmium | secondary | 1.74e-07 | 8.83e-09 |
| Lead | Methanol | secondary | 1.62e-07 | 8.23e-09 |
| Ferrite mfg. | Mercury | secondary | 1.62e-07 | 8.18e-09 |
| Steel Prod., cold-rolled, semi-finished | Acetaldehyde | secondary | 1.53e-07 | 7.76e-09 |
| ABS Production | Ethylene | secondary | 1.52e-07 | 7.70e-09 |
| Lead | Phenol | secondary | 1.37e-07 | 6.96e-09 |
| Invar | Ethylbenzene | secondary | 1.37e-07 | 6.92e-09 |

## Table M-39. CRT LCIA Results for the Terrestrial Toxicity Impact Category

| Process Group | Material | LCI Data Type | Terrestrial Toxicity (tox-kg) | % of Total |
|---|---|---|---|---|
| Invar | Acetone | secondary | 1.36e-07 | 6.90e-09 |
| Aluminum Prod. | Chromium (III) | secondary | 1.31e-07 | 6.64e-09 |
| Steel Prod., cold-rolled, semi-finished | Rubidium ion (Rb+) | secondary | 1.21e-07 | 6.13e-09 |
| Ferrite mfg. | Cobalt | secondary | 1.20e-07 | 6.09e-09 |
| Ferrite mfg. | Manganese | secondary | 1.19e-07 | 6.01e-09 |
| Steel Prod., cold-rolled, semi-finished | Fluorine | secondary | 1.14e-07 | 5.76e-09 |
| Lead | Cyanide (-1) | secondary | 9.76e-08 | 4.94e-09 |
| Lead | Ethylene | secondary | 9.43e-08 | 4.78e-09 |
| Invar | Strontium | secondary | 9.37e-08 | 4.75e-09 |
| Steel Prod., cold-rolled, semi-finished | Molybdenum (Mo II, Mo III, Mo IV, Mo V, Mo VI) | secondary | 9.07e-08 | 4.59e-09 |
| Steel Prod., cold-rolled, semi-finished | Benzo[a]pyrene | secondary | 8.92e-08 | 4.52e-09 |
| Ferrite mfg. | Boron (B III) | secondary | 8.91e-08 | 4.51e-09 |
| Ferrite mfg. | Cobalt (Co I, Co II, Co III) | secondary | 8.79e-08 | 4.45e-09 |
| Ferrite mfg. | Acetic acid | secondary | 8.74e-08 | 4.43e-09 |
| Lead | Toluene | secondary | 8.24e-08 | 4.18e-09 |
| Steel Prod., cold-rolled, semi-finished | Acetone | secondary | 7.91e-08 | 4.01e-09 |
| Invar | HALON-1301 | secondary | 7.60e-08 | 3.85e-09 |
| Lead | Cobalt | secondary | 7.32e-08 | 3.71e-09 |
| Lead | Acetic acid | secondary | 7.30e-08 | 3.70e-09 |
| Lead | Aromatic hydrocarbons | secondary | 6.79e-08 | 3.44e-09 |
| Invar | Sulfuric acid | secondary | 5.98e-08 | 3.03e-09 |
| Ferrite mfg. | Sulfuric acid | secondary | 5.84e-08 | 2.96e-09 |
| Invar | Mercury compounds | secondary | 5.57e-08 | 2.82e-09 |
| Ferrite mfg. | Mercury compounds | secondary | 5.44e-08 | 2.76e-09 |
| Steel Prod., cold-rolled, semi-finished | Lanthanum | secondary | 5.37e-08 | 2.72e-09 |
| Steel Prod., cold-rolled, semi-finished | Ethylbenzene | secondary | 5.25e-08 | 2.66e-09 |
| Invar | Morpholine | secondary | 5.07e-08 | 2.57e-09 |
| Invar | Propylene | secondary | 5.03e-08 | 2.55e-09 |
| Ferrite mfg. | Morpholine | secondary | 4.95e-08 | 2.51e-09 |
| Ferrite mfg. | Strontium | secondary | 4.94e-08 | 2.50e-09 |
| Ferrite mfg. | Propylene | secondary | 4.91e-08 | 2.49e-09 |
| Invar | Nitrous oxide | secondary | 4.85e-08 | 2.46e-09 |
| Invar | Chromium (III) | secondary | 4.79e-08 | 2.42e-09 |
| Lead | Ethylbenzene | secondary | 4.72e-08 | 2.39e-09 |
| Steel Prod., cold-rolled, semi-finished | Beryllium | secondary | 4.72e-08 | 2.39e-09 |
| Aluminum Prod. | Strontium | secondary | 4.48e-08 | 2.27e-09 |
| Ferrite mfg. | Acetaldehyde | secondary | 4.38e-08 | 2.22e-09 |
| Lead | Chromium (III) | secondary | 3.86e-08 | 1.96e-09 |
| Invar | Rubidium ion (Rb+) | secondary | 3.66e-08 | 1.85e-09 |
| Ferrite mfg. | Rubidium ion (Rb+) | secondary | 3.57e-08 | 1.81e-09 |
| Lead | Acetaldehyde | secondary | 3.39e-08 | 1.72e-09 |
| Lead | HALON-1301 | secondary | 3.39e-08 | 1.72e-09 |
| Steel Prod., cold-rolled, semi-finished | Mercury | secondary | 3.26e-08 | 1.65e-09 |
| Invar | Fluorine | secondary | 3.22e-08 | 1.63e-09 |
| Ferrite mfg. | Fluorine | secondary | 3.14e-08 | 1.59e-09 |
| Steel Prod., cold-rolled, semi-finished | Thorium | secondary | 2.88e-08 | 1.46e-09 |
| Ferrite mfg. | Molybdenum (Mo II, Mo III, Mo IV, Mo V, Mo VI) | secondary | 2.55e-08 | 1.29e-09 |
| Steel Prod., cold-rolled, semi-finished | HALON-1301 | secondary | 2.52e-08 | 1.28e-09 |

## Table M-39. CRT LCIA Results for the Terrestrial Toxicity Impact Category

| Process Group | Material | LCI Data Type | Terrestrial Toxicity (tox-kg) | % of Total |
|---|---|---|---|---|
| Ferrite mfg. | Benzo[a]pyrene | secondary | 2.48e-08 | 1.25e-09 |
| Ferrite mfg. | Acetone | secondary | 2.23e-08 | 1.13e-09 |
| Ferrite mfg. | Ethylbenzene | secondary | 1.94e-08 | 9.82e-10 |
| Lead | Acetone | secondary | 1.72e-08 | 8.70e-10 |
| Steel Prod., cold-rolled, semi-finished | Tin | secondary | 1.68e-08 | 8.49e-10 |
| Steel Prod., cold-rolled, semi-finished | Phosphorus pentoxide | secondary | 1.61e-08 | 8.15e-10 |
| Invar | Lanthanum | secondary | 1.53e-08 | 7.76e-10 |
| Ferrite mfg. | Lanthanum | secondary | 1.50e-08 | 7.58e-10 |
| Invar | Beryllium | secondary | 1.34e-08 | 6.80e-10 |
| Ferrite mfg. | Beryllium | secondary | 1.31e-08 | 6.64e-10 |
| Steel Prod., cold-rolled, semi-finished | Scandium | secondary | 1.31e-08 | 6.62e-10 |
| Steel Prod., cold-rolled, semi-finished | Chlorine | secondary | 1.14e-08 | 5.78e-10 |
| Aluminum Prod. | 1,2-Dichlorotetrafluoroethane | secondary | 1.04e-08 | 5.28e-10 |
| Ferrite mfg. | HALON-1301 | secondary | 9.52e-09 | 4.82e-10 |
| Steel Prod., cold-rolled, semi-finished | Thallium | secondary | 8.89e-09 | 4.51e-10 |
| Aluminum Prod. | Perfluoroethane | secondary | 8.46e-09 | 4.28e-10 |
| Invar | Thorium | secondary | 8.23e-09 | 4.17e-10 |
| Ferrite mfg. | Thorium | secondary | 8.03e-09 | 4.07e-10 |
| Invar | Hydrogen cyanide | secondary | 7.58e-09 | 3.84e-10 |
| Ferrite mfg. | Hydrogen cyanide | secondary | 7.40e-09 | 3.75e-10 |
| Steel Prod., cold-rolled, semi-finished | Chromium (III) | secondary | 5.29e-09 | 2.68e-10 |
| Steel Prod., cold-rolled, semi-finished | Nitrites | secondary | 5.19e-09 | 2.63e-10 |
| Ferrite mfg. | Chromium (III) | secondary | 5.01e-09 | 2.54e-10 |
| Invar | Tin | secondary | 4.77e-09 | 2.41e-10 |
| Invar | Phosphorus pentoxide | secondary | 4.69e-09 | 2.38e-10 |
| Ferrite mfg. | Tin | secondary | 4.65e-09 | 2.36e-10 |
| Ferrite mfg. | Phosphorus pentoxide | secondary | 4.58e-09 | 2.32e-10 |
| Invar | 1,2-Dichlorotetrafluoroethane | secondary | 4.31e-09 | 2.19e-10 |
| Invar | Scandium | secondary | 3.74e-09 | 1.89e-10 |
| Ferrite mfg. | Scandium | secondary | 3.65e-09 | 1.85e-10 |
| Invar | Perfluoromethane | secondary | 2.85e-09 | 1.45e-10 |
| Ferrite mfg. | Perfluoromethane | secondary | 2.78e-09 | 1.41e-10 |
| Invar | Thallium | secondary | 2.55e-09 | 1.29e-10 |
| Ferrite mfg. | Thallium | secondary | 2.49e-09 | 1.26e-10 |
| Invar | Trichlorofluoromethane | secondary | 2.06e-09 | 1.04e-10 |
| Lead | Benzo[a]pyrene | secondary | 1.96e-09 | 9.94e-11 |
| Steel Prod., cold-rolled, semi-finished | Edetic acid (EDTA) | secondary | 1.93e-09 | 9.78e-11 |
| Invar | Hypochlorous acid | secondary | 1.77e-09 | 8.98e-11 |
| Steel Prod., cold-rolled, semi-finished | Hypochlorous acid | secondary | 1.76e-09 | 8.91e-11 |
| Ferrite mfg. | Hypochlorous acid | secondary | 1.73e-09 | 8.76e-11 |
| Steel Prod., cold-rolled, semi-finished | Cobalt (Co I, Co II, Co III) | secondary | 1.57e-09 | 7.96e-11 |
| Invar | Dichloromethane | secondary | 1.46e-09 | 7.39e-11 |
| Steel Prod., cold-rolled, semi-finished | Dichloromethane | secondary | 1.45e-09 | 7.34e-11 |
| Ferrite mfg. | Dichloromethane | secondary | 1.42e-09 | 7.21e-11 |
| Invar | Chlorine | secondary | 1.11e-09 | 5.62e-11 |
| Ferrite mfg. | Chlorine | secondary | 1.08e-09 | 5.49e-11 |
| Ferrite mfg. | Trichlorofluoromethane | secondary | 7.65e-10 | 3.87e-11 |
| Invar | Dichlorodifluoromethane | secondary | 6.37e-10 | 3.23e-11 |
| Invar | Edetic acid (EDTA) | secondary | 5.47e-10 | 2.77e-11 |
| Ferrite mfg. | Edetic acid (EDTA) | secondary | 5.34e-10 | 2.70e-11 |

## Table M-39. CRT LCIA Results for the Terrestrial Toxicity Impact Category

| Process Group | Material | LCI Data Type | Terrestrial Toxicity (tox-kg) | % of Total |
|---|---|---|---|---|
| Invar | CFC-13 | secondary | 5.04e-10 | 2.55e-11 |
| Steel Prod., cold-rolled, semi-finished | Isopropylpropionate | secondary | 2.02e-10 | 1.02e-11 |
| Ferrite mfg. | Isopropylpropionate | secondary | 1.99e-10 | 1.01e-11 |
| Invar | Halogenated matter (organic) | secondary | 1.37e-10 | 6.95e-12 |
| Ferrite mfg. | Halogenated matter (organic) | secondary | 1.34e-10 | 6.78e-12 |
| Steel Prod., cold-rolled, semi-finished | Lithium salts | secondary | 9.91e-11 | 5.02e-12 |
| Invar | Ethanethiol | secondary | 8.71e-11 | 4.41e-12 |
| Ferrite mfg. | Ethanethiol | secondary | 8.50e-11 | 4.31e-12 |
| Ferrite mfg. | Tin (Sn++, Sn4+) | secondary | 7.29e-11 | 3.69e-12 |
| Invar | Chloroform | secondary | 5.44e-11 | 2.76e-12 |
| Steel Prod., cold-rolled, semi-finished | Chloroform | secondary | 5.40e-11 | 2.73e-12 |
| Ferrite mfg. | Chloroform | secondary | 5.31e-11 | 2.69e-12 |
| Steel Prod., cold-rolled, semi-finished | Zirconium | secondary | 4.66e-11 | 2.36e-12 |
| Steel Prod., cold-rolled, semi-finished | Perfluoromethane | secondary | 4.49e-11 | 2.28e-12 |
| ABS Production | HCFC-22 | secondary | 3.47e-11 | 1.76e-12 |
| Invar | Lithium salts | secondary | 2.81e-11 | 1.42e-12 |
| Ferrite mfg. | Lithium salts | secondary | 2.74e-11 | 1.39e-12 |
| Lead | Acrolein | secondary | 2.38e-11 | 1.21e-12 |
| Invar | Zirconium | secondary | 1.34e-11 | 6.77e-13 |
| Ferrite mfg. | Zirconium | secondary | 1.30e-11 | 6.61e-13 |
| Lead | Benzaldehyde | secondary | 1.04e-12 | 5.25e-14 |
| Invar | Trichloroethylene | secondary | 7.82e-13 | 3.96e-14 |
| Steel Prod., cold-rolled, semi-finished | Trichloroethylene | secondary | 7.75e-13 | 3.93e-14 |
| Ferrite mfg. | Trichloroethylene | secondary | 7.63e-13 | 3.87e-14 |
| Invar | HFC-125 | secondary | 6.44e-13 | 3.26e-14 |
| Ferrite mfg. | HFC-125 | secondary | 6.29e-13 | 3.19e-14 |
| Invar | Propionaldehyde | secondary | 5.32e-14 | 2.69e-15 |
| Steel Prod., cold-rolled, semi-finished | Propionaldehyde | secondary | 5.32e-14 | 2.69e-15 |
| Ferrite mfg. | Propionaldehyde | secondary | 5.19e-14 | 2.63e-15 |
| Invar | Pentachlorobenzene | secondary | 2.77e-14 | 1.40e-15 |
| Steel Prod., cold-rolled, semi-finished | Tetrachloroethylene | secondary | 2.19e-14 | 1.11e-15 |
| Invar | Tetrachloroethylene | secondary | 2.16e-14 | 1.09e-15 |
| Ferrite mfg. | Tetrachloroethylene | secondary | 2.11e-14 | 1.07e-15 |
| Invar | Acrolein | secondary | 9.90e-15 | 5.01e-16 |
| Steel Prod., cold-rolled, semi-finished | Benzaldehyde | secondary | 4.72e-15 | 2.39e-16 |
| Invar | Benzaldehyde | secondary | 4.69e-15 | 2.38e-16 |
| Ferrite mfg. | Benzaldehyde | secondary | 4.57e-15 | 2.32e-16 |
| Invar | 1,1,1-Trichloroethane | secondary | 3.25e-15 | 1.65e-16 |
| Steel Prod., cold-rolled, semi-finished | 1,1,1-Trichloroethane | secondary | 3.21e-15 | 1.63e-16 |
| Ferrite mfg. | 1,1,1-Trichloroethane | secondary | 3.16e-15 | 1.60e-16 |
| Invar | Perfluoroethane | secondary | 3.14e-15 | 1.59e-16 |
| Invar | Pentachlorophenol | secondary | 1.24e-15 | 6.28e-17 |
| Ferrite mfg. | 1,2-Dichlorotetrafluoroethane | secondary | 3.19e-16 | 1.61e-17 |
| Invar | Hexachloroethane | secondary | 1.24e-16 | 6.27e-18 |
| Steel Prod., cold-rolled, semi-finished | Hexachloroethane | secondary | 1.23e-16 | 6.23e-18 |
| Ferrite mfg. | Hexachloroethane | secondary | 1.21e-16 | 6.12e-18 |
| Ferrite mfg. | Dichlorodifluoromethane | secondary | 4.72e-17 | 2.39e-18 |
| Ferrite mfg. | CFC-13 | secondary | 3.74e-17 | 1.89e-18 |
| Invar | HCFC-22 | secondary | 8.74e-19 | 4.43e-20 |
| Ferrite mfg. | HCFC-22 | secondary | 8.54e-19 | 4.32e-20 |

## Table M-39. CRT LCIA Results for the Terrestrial Toxicity Impact Category

| Process Group | Material | LCI Data Type | Terrestrial Toxicity (tox-kg) | % of Total |
|---|---|---|---|---|
| **Total Materials Processing** | | | **2.28e+02** | **1.16e+01** |
| **Manufacturing Life-cycle Stage** | | | | |
| Japanese Electric Grid | Sulfur dioxide | model/secondary | 5.69e+01 | 2.88e+00 |
| US electric grid | Sulfur dioxide | model/secondary | 2.63e+01 | 1.33e+00 |
| LPG Production | Carbon monoxide | secondary | 5.34e+00 | 2.71e-01 |
| LPG Production | Vanadium | secondary | 1.05e+00 | 5.30e-02 |
| LPG Production | Benzene | secondary | 8.57e-01 | 4.34e-02 |
| LPG Production | Methane | secondary | 8.39e-01 | 4.25e-02 |
| LPG Production | Sulfur oxides | secondary | 8.01e-01 | 4.06e-02 |
| Glass/frit | Fluorides (F-) | primary | 5.82e-01 | 2.95e-02 |
| LPG Production | Nitrogen oxides | secondary | 5.73e-01 | 2.90e-02 |
| CRT tube mfg. | Carbon monoxide | primary | 2.12e-01 | 1.07e-02 |
| LPG Production | Arsenic | secondary | 2.06e-01 | 1.05e-02 |
| LPG Production | Formaldehyde | secondary | 1.34e-01 | 6.79e-03 |
| LPG Production | PM | secondary | 1.29e-01 | 6.53e-03 |
| Natural Gas Prod. | Benzene | secondary | 7.57e-02 | 3.83e-03 |
| Natural Gas Prod. | Carbon monoxide | secondary | 6.36e-02 | 3.22e-03 |
| Natural Gas Prod. | Methane | secondary | 5.02e-02 | 2.54e-03 |
| Glass/frit | Nitrogen oxides | primary | 4.41e-02 | 2.24e-03 |
| Japanese Electric Grid | Nitrogen oxides | model/secondary | 4.07e-02 | 2.06e-03 |
| CRT tube mfg. | Phosphorus (yellow or white) | primary | 4.00e-02 | 2.03e-03 |
| LPG Production | Hydrochloric acid | secondary | 3.68e-02 | 1.86e-03 |
| Japanese Electric Grid | Carbon monoxide | model/secondary | 3.50e-02 | 1.77e-03 |
| Fuel Oil #6 Prod. | Carbon monoxide | secondary | 2.62e-02 | 1.33e-03 |
| Japanese Electric Grid | Vanadium | model/secondary | 2.27e-02 | 1.15e-03 |
| US electric grid | Nitrogen oxides | model/secondary | 1.88e-02 | 9.52e-04 |
| LPG Production | Nitrous oxide | secondary | 1.62e-02 | 8.22e-04 |
| US electric grid | Carbon monoxide | model/secondary | 1.61e-02 | 8.17e-04 |
| Fuel Oil #2 Prod. | Carbon monoxide | secondary | 1.56e-02 | 7.89e-04 |
| Fuel Oil #6 Prod. | Vanadium | secondary | 1.08e-02 | 5.45e-04 |
| Japanese Electric Grid | Arsenic | model/secondary | 1.04e-02 | 5.28e-04 |
| US electric grid | Methane | model/secondary | 1.03e-02 | 5.21e-04 |
| CRT tube mfg. | Sulfur oxides | primary | 9.96e-03 | 5.05e-04 |
| LPG Production | Phosphorus (yellow or white) | secondary | 9.81e-03 | 4.97e-04 |
| Natural Gas Prod. | Nitrogen oxides | secondary | 9.32e-03 | 4.72e-04 |
| US electric grid | Arsenic | model/secondary | 8.91e-03 | 4.51e-04 |
| US electric grid | Hydrochloric acid | model/secondary | 7.87e-03 | 3.99e-04 |
| LPG Production | Fluorides (F-) | secondary | 7.50e-03 | 3.80e-04 |
| LPG Production | Selenium | secondary | 7.41e-03 | 3.76e-04 |
| Japanese Electric Grid | Hydrochloric acid | model/secondary | 6.28e-03 | 3.18e-04 |
| Fuel Oil #6 Prod. | Methane | secondary | 5.89e-03 | 2.98e-04 |
| Glass/frit | Fluorides (F-) | primary | 5.82e-03 | 2.95e-04 |
| Fuel Oil #6 Prod. | Sulfur oxides | secondary | 5.47e-03 | 2.77e-04 |
| Fuel Oil #6 Prod. | Benzene | secondary | 4.90e-03 | 2.48e-04 |
| PWB Mfg. | Formaldehyde | model/secondary | 4.44e-03 | 2.25e-04 |
| Fuel Oil #6 Prod. | Nitrogen oxides | secondary | 4.09e-03 | 2.07e-04 |
| LPG Production | Ammonia | secondary | 3.74e-03 | 1.89e-04 |
| CRT tube mfg. | Fluoride | primary | 3.45e-03 | 1.75e-04 |
| Fuel Oil #2 Prod. | Vanadium | secondary | 3.45e-03 | 1.75e-04 |
| LPG Production | Hydrogen sulfide | secondary | 3.07e-03 | 1.55e-04 |

## Table M-39. CRT LCIA Results for the Terrestrial Toxicity Impact Category

| Process Group | Material | LCI Data Type | Terrestrial Toxicity (tox-kg) | % of Total |
|---|---|---|---|---|
| CRT tube mfg. | Dimethyl Formamide | primary | 3.03e-03 | 1.54e-04 |
| Fuel Oil #2 Prod. | Methane | secondary | 2.57e-03 | 1.30e-04 |
| Fuel Oil #2 Prod. | Benzene | secondary | 2.55e-03 | 1.29e-04 |
| Fuel Oil #2 Prod. | Sulfur oxides | secondary | 2.44e-03 | 1.23e-04 |
| CRT tube mfg. | Nitrogen oxides | primary | 2.17e-03 | 1.10e-04 |
| Japanese Electric Grid | PM-10 | model/secondary | 2.00e-03 | 1.01e-04 |
| Glass/frit | Carbon monoxide | primary | 2.00e-03 | 1.01e-04 |
| Fuel Oil #2 Prod. | Nitrogen oxides | secondary | 1.76e-03 | 8.90e-05 |
| Fuel Oil #6 Prod. | Arsenic | secondary | 1.72e-03 | 8.74e-05 |
| CRT tube mfg. | Zinc (elemental) | primary | 1.65e-03 | 8.35e-05 |
| LPG Production | Molybdenum | secondary | 1.65e-03 | 8.34e-05 |
| US electric grid | Selenium | model/secondary | 1.48e-03 | 7.50e-05 |
| Fuel Oil #4 Prod. | Carbon monoxide | secondary | 1.40e-03 | 7.11e-05 |
| Fuel Oil #6 Prod. | Formaldehyde | secondary | 1.37e-03 | 6.93e-05 |
| Japanese Electric Grid | Fluorides (F-) | model/secondary | 1.31e-03 | 6.63e-05 |
| Japanese Electric Grid | Selenium | model/secondary | 1.27e-03 | 6.46e-05 |
| LPG Production | Zinc (elemental) | secondary | 1.20e-03 | 6.08e-05 |
| Japanese Electric Grid | Formaldehyde | model/secondary | 1.17e-03 | 5.92e-05 |
| US electric grid | Vanadium | model/secondary | 1.11e-03 | 5.64e-05 |
| LPG Production | Hydrofluoric acid | secondary | 1.00e-03 | 5.08e-05 |
| Fuel Oil #6 Prod. | PM | secondary | 9.24e-04 | 4.68e-05 |
| US electric grid | PM-10 | model/secondary | 9.22e-04 | 4.67e-05 |
| LPG Production | Ethane | secondary | 7.76e-04 | 3.93e-05 |
| LPG Production | Phenol | secondary | 7.15e-04 | 3.62e-05 |
| Fuel Oil #2 Prod. | Arsenic | secondary | 6.52e-04 | 3.30e-05 |
| LPG Production | Pentane | secondary | 6.51e-04 | 3.30e-05 |
| CRT tube mfg. | Toluene | primary | 6.41e-04 | 3.25e-05 |
| Japanese Electric Grid | Zinc (elemental) | model/secondary | 6.13e-04 | 3.11e-05 |
| Glass/frit | Nitrogen oxides | primary | 5.33e-04 | 2.70e-05 |
| LPG Production | Hexane | secondary | 4.51e-04 | 2.28e-05 |
| Fuel Oil #2 Prod. | Formaldehyde | secondary | 4.41e-04 | 2.23e-05 |
| Natural Gas Prod. | PM | secondary | 4.14e-04 | 2.10e-05 |
| Fuel Oil #4 Prod. | Vanadium | secondary | 4.03e-04 | 2.04e-05 |
| Fuel Oil #2 Prod. | PM | secondary | 3.96e-04 | 2.01e-05 |
| Japanese Electric Grid | Antimony | model/secondary | 3.23e-04 | 1.64e-05 |
| Natural Gas Prod. | Arsenic | secondary | 3.15e-04 | 1.59e-05 |
| Fuel Oil #6 Prod. | Hydrochloric acid | secondary | 2.97e-04 | 1.50e-05 |
| LPG Production | Nickel | secondary | 2.90e-04 | 1.47e-05 |
| Natural Gas Prod. | Sulfur oxides | secondary | 2.76e-04 | 1.40e-05 |
| Natural Gas Prod. | Ammonia | secondary | 2.69e-04 | 1.36e-05 |
| Fuel Oil #4 Prod. | Methane | secondary | 2.61e-04 | 1.32e-05 |
| Fuel Oil #4 Prod. | Sulfur oxides | secondary | 2.45e-04 | 1.24e-05 |
| Fuel Oil #4 Prod. | Benzene | secondary | 2.41e-04 | 1.22e-05 |
| LPG Production | PM-10 | secondary | 2.25e-04 | 1.14e-05 |
| US electric grid | Hydrofluoric acid | model/secondary | 2.15e-04 | 1.09e-05 |
| LPG Production | Antimony | secondary | 2.14e-04 | 1.08e-05 |
| CRT tube mfg. | Nickel | primary | 1.89e-04 | 9.56e-06 |
| Fuel Oil #4 Prod. | Nitrogen oxides | secondary | 1.79e-04 | 9.09e-06 |
| Japanese Electric Grid | Hydrofluoric acid | model/secondary | 1.71e-04 | 8.69e-06 |
| US electric grid | Formaldehyde | model/secondary | 1.55e-04 | 7.84e-06 |

## Table M-39. CRT LCIA Results for the Terrestrial Toxicity Impact Category

| Process Group | Material | LCI Data Type | Terrestrial Toxicity (tox-kg) | % of Total |
|---|---|---|---|---|
| Fuel Oil #6 Prod. | Nitrous oxide | secondary | 1.45e-04 | 7.35e-06 |
| LPG Production | Aluminum (+3) | secondary | 1.42e-04 | 7.17e-06 |
| Japanese Electric Grid | Molybdenum | model/secondary | 1.31e-04 | 6.66e-06 |
| Fuel Oil #2 Prod. | Hydrochloric acid | secondary | 1.15e-04 | 5.85e-06 |
| Japanese Electric Grid | Nitrous oxide | model/secondary | 1.12e-04 | 5.66e-06 |
| US electric grid | Benzene | model/secondary | 1.11e-04 | 5.64e-06 |
| Glass/frit | PM | primary | 1.09e-04 | 5.53e-06 |
| CRT tube mfg. | Molybdenum | primary | 1.02e-04 | 5.18e-06 |
| LPG Production | Chromium (VI) | secondary | 1.01e-04 | 5.11e-06 |
| Fuel Oil #6 Prod. | Phosphorus (yellow or white) | secondary | 9.77e-05 | 4.95e-06 |
| Japanese Electric Grid | Benzene | model/secondary | 9.10e-05 | 4.61e-06 |
| Japanese Electric Grid | Methane | model/secondary | 8.13e-05 | 4.12e-06 |
| Fuel Oil #4 Prod. | Arsenic | secondary | 7.04e-05 | 3.57e-06 |
| Natural Gas Prod. | Vanadium | secondary | 6.96e-05 | 3.53e-06 |
| Natural Gas Prod. | Hydrochloric acid | secondary | 6.39e-05 | 3.24e-06 |
| US electric grid | Phosphorus (yellow or white) | model/secondary | 6.27e-05 | 3.18e-06 |
| Fuel Oil #6 Prod. | Selenium | secondary | 6.07e-05 | 3.07e-06 |
| LPG Production | Nitrate | secondary | 6.06e-05 | 3.07e-06 |
| Fuel Oil #6 Prod. | Fluorides (F-) | secondary | 5.83e-05 | 2.96e-06 |
| Glass/frit | Carbon monoxide | primary | 5.59e-05 | 2.83e-06 |
| US electric grid | Nitrous oxide | model/secondary | 5.42e-05 | 2.75e-06 |
| Fuel Oil #2 Prod. | Nitrous oxide | secondary | 5.19e-05 | 2.63e-06 |
| Fuel Oil #4 Prod. | Formaldehyde | secondary | 5.14e-05 | 2.60e-06 |
| Glass/frit | Sulfur oxides | primary | 5.08e-05 | 2.58e-06 |
| Glass/frit | Lead | primary | 4.37e-05 | 2.21e-06 |
| CRT tube mfg. | Copper | primary | 4.05e-05 | 2.05e-06 |
| Fuel Oil #4 Prod. | PM | secondary | 4.05e-05 | 2.05e-06 |
| Japanese Electric Grid | Nickel | model/secondary | 3.51e-05 | 1.78e-06 |
| LPG Production | Copper | secondary | 3.49e-05 | 1.77e-06 |
| LPG Production | 2-Chloroacetophenone | secondary | 3.22e-05 | 1.63e-06 |
| Fuel Oil #2 Prod. | Phosphorus (yellow or white) | secondary | 3.21e-05 | 1.63e-06 |
| LPG Production | Dimethylbenzanthracene | secondary | 3.19e-05 | 1.62e-06 |
| LPG Production | Bromomethane | secondary | 3.18e-05 | 1.61e-06 |
| Fuel Oil #6 Prod. | Hydrogen sulfide | secondary | 3.18e-05 | 1.61e-06 |
| Glass/frit | Nitrates/nitrites | primary | 2.94e-05 | 1.49e-06 |
| Japanese Electric Grid | Barium | model/secondary | 2.94e-05 | 1.49e-06 |
| US electric grid | Zinc (elemental) | model/secondary | 2.89e-05 | 1.47e-06 |
| Natural Gas Prod. | Formaldehyde | secondary | 2.77e-05 | 1.40e-06 |
| LPG Production | Naphthalene | secondary | 2.58e-05 | 1.31e-06 |
| CRT tube mfg. | Xylene (mixed isomers) | primary | 2.55e-05 | 1.29e-06 |
| US electric grid | Antimony | model/secondary | 2.37e-05 | 1.20e-06 |
| Fuel Oil #2 Prod. | Fluorides (F-) | secondary | 2.34e-05 | 1.18e-06 |
| Fuel Oil #2 Prod. | Selenium | secondary | 2.33e-05 | 1.18e-06 |
| LPG Production | Manganese | secondary | 2.23e-05 | 1.13e-06 |
| Fuel Oil #6 Prod. | Ammonia | secondary | 2.01e-05 | 1.02e-06 |
| LPG Production | Barium | secondary | 1.86e-05 | 9.44e-07 |
| LPG Production | Silicon | secondary | 1.69e-05 | 8.57e-07 |
| LPG Production | Cyanide (-I) | secondary | 1.67e-05 | 8.47e-07 |
| Japanese Electric Grid | Naphthalene | model/secondary | 1.63e-05 | 8.28e-07 |
| LPG Production | Barium cmpds | secondary | 1.59e-05 | 8.04e-07 |
| Fuel Oil #6 Prod. | Molybdenum | secondary | 1.56e-05 | 7.89e-07 |

## Table M-39. CRT LCIA Results for the Terrestrial Toxicity Impact Category

| Process Group | Material | LCI Data Type | Terrestrial Toxicity (tox-kg) | % of Total |
|---|---|---|---|---|
| Natural Gas Prod. | Fluorides (F-) | secondary | 1.35e-05 | 6.85e-07 |
| LPG Production | Lead | secondary | 1.24e-05 | 6.26e-07 |
| Fuel Oil #4 Prod. | Hydrochloric acid | secondary | 1.23e-05 | 6.24e-07 |
| Natural Gas Prod. | Selenium | secondary | 1.21e-05 | 6.15e-07 |
| Natural Gas Prod. | Nitrous oxide | secondary | 1.15e-05 | 5.85e-07 |
| Fuel Oil #2 Prod. | Ammonia | secondary | 1.10e-05 | 5.58e-07 |
| Fuel Oil #2 Prod. | Hydrogen sulfide | secondary | 1.01e-05 | 5.12e-07 |
| Natural Gas Prod. | Zinc (elemental) | secondary | 8.50e-06 | 4.31e-07 |
| Fuel Oil #6 Prod. | Hydrofluoric acid | secondary | 8.10e-06 | 4.10e-07 |
| US electric grid | Molybdenum | model/secondary | 7.92e-06 | 4.01e-07 |
| Japanese Electric Grid | Copper | model/secondary | 7.14e-06 | 3.62e-07 |
| Natural Gas Prod. | Ethane | secondary | 6.99e-06 | 3.54e-07 |
| US electric grid | 2-Chloroacetophenone | model/secondary | 6.88e-06 | 3.49e-07 |
| US electric grid | Bromomethane | model/secondary | 6.81e-06 | 3.45e-07 |
| Fuel Oil #6 Prod. | Zinc (elemental) | secondary | 6.59e-06 | 3.34e-07 |
| LPG Production | Carbon disulfide | secondary | 5.98e-06 | 3.03e-07 |
| Natural Gas Prod. | Pentane | secondary | 5.86e-06 | 2.97e-07 |
| Fuel Oil #4 Prod. | Nitrous oxide | secondary | 5.75e-06 | 2.91e-07 |
| Japanese Electric Grid | 2-Chloroacetophenone | model/secondary | 5.50e-06 | 2.79e-07 |
| Japanese Electric Grid | Bromomethane | model/secondary | 5.44e-06 | 2.76e-07 |
| Fuel Oil #2 Prod. | Molybdenum | secondary | 5.33e-06 | 2.70e-07 |
| LPG Production | Benzyl chloride | secondary | 4.68e-06 | 2.37e-07 |
| Fuel Oil #6 Prod. | Ethane | secondary | 4.43e-06 | 2.25e-07 |
| Natural Gas Prod. | Hexane | secondary | 4.06e-06 | 2.06e-07 |
| LPG Production | Aluminum (elemental) | secondary | 3.87e-06 | 1.96e-07 |
| Fuel Oil #6 Prod. | Pentane | secondary | 3.72e-06 | 1.88e-07 |
| Fuel Oil #4 Prod. | Phosphorus (yellow or white) | secondary | 3.70e-06 | 1.88e-07 |
| LPG Production | Chloroform | secondary | 3.64e-06 | 1.84e-07 |
| CRT tube mfg. | Manganese | primary | 3.60e-06 | 1.83e-07 |
| US electric grid | Cyanide (-1) | model/secondary | 3.58e-06 | 1.81e-07 |
| Fuel Oil #2 Prod. | Zinc (elemental) | secondary | 3.54e-06 | 1.80e-07 |
| Fuel Oil #2 Prod. | Hydrofluoric acid | secondary | 3.15e-06 | 1.60e-07 |
| CRT tube mfg. | Lead | primary | 3.01e-06 | 1.53e-07 |
| Japanese Electric Grid | Cyanide (-1) | model/secondary | 2.86e-06 | 1.45e-07 |
| Fuel Oil #6 Prod. | Nickel | secondary | 2.81e-06 | 1.42e-07 |
| US electric grid | 2,3,7,8-TCDD | model/secondary | 2.71e-06 | 1.37e-07 |
| US electric grid | Nickel | model/secondary | 2.60e-06 | 1.32e-07 |
| Fuel Oil #6 Prod. | Hexane | secondary | 2.58e-06 | 1.31e-07 |
| LPG Production | Cobalt | secondary | 2.51e-06 | 1.27e-07 |
| Fuel Oil #4 Prod. | Selenium | secondary | 2.50e-06 | 1.27e-07 |
| Fuel Oil #4 Prod. | Fluorides (F-) | secondary | 2.46e-06 | 1.25e-07 |
| Fuel Oil #6 Prod. | Phenol | secondary | 2.42e-06 | 1.23e-07 |
| Fuel Oil #6 Prod. | PM-10 | secondary | 2.33e-06 | 1.18e-07 |
| Natural Gas Prod. | Molybdenum | secondary | 2.31e-06 | 1.17e-07 |
| Fuel Oil #2 Prod. | Ethane | secondary | 2.30e-06 | 1.17e-07 |
| Japanese Electric Grid | 2,3,7,8-TCDD | model/secondary | 2.22e-06 | 1.13e-07 |
| US electric grid | Naphthalene | model/secondary | 2.16e-06 | 1.09e-07 |
| Fuel Oil #2 Prod. | Phenol | secondary | 2.01e-06 | 1.02e-07 |
| LPG Production | Acrolein | secondary | 1.94e-06 | 9.83e-08 |
| Fuel Oil #2 Prod. | Pentane | secondary | 1.93e-06 | 9.79e-08 |

## Table M-39. CRT LCIA Results for the Terrestrial Toxicity Impact Category

| Process Group | Material | LCI Data Type | Terrestrial Toxicity (tox-kg) | % of Total |
|---|---|---|---|---|
| US electric grid | Barium | model/secondary | 1.86e-06 | 9.42e-08 |
| Natural Gas Prod. | Phosphorus (yellow or white) | secondary | 1.77e-06 | 8.96e-08 |
| Natural Gas Prod. | Hydrofluoric acid | secondary | 1.74e-06 | 8.83e-08 |
| LPG Production | Methyl chloride | secondary | 1.57e-06 | 7.96e-08 |
| LPG Production | Beryllium | secondary | 1.40e-06 | 7.11e-08 |
| Fuel Oil #2 Prod. | Hexane | secondary | 1.34e-06 | 6.79e-08 |
| US electric grid | Carbon disulfide | model/secondary | 1.28e-06 | 6.48e-08 |
| Fuel Oil #4 Prod. | Hydrogen sulfide | secondary | 1.19e-06 | 6.00e-08 |
| Fuel Oil #6 Prod. | Antimony | secondary | 1.18e-06 | 6.00e-08 |
| Japanese Electric Grid | Cobalt | model/secondary | 1.18e-06 | 5.99e-08 |
| LPG Production | Methyl hydrazine | secondary | 1.14e-06 | 5.76e-08 |
| Fuel Oil #4 Prod. | Ammonia | secondary | 1.02e-06 | 5.18e-08 |
| Japanese Electric Grid | Carbon disulfide | model/secondary | 1.02e-06 | 5.17e-08 |
| US electric grid | Benzyl chloride | model/secondary | 1.00e-06 | 5.08e-08 |
| Fuel Oil #2 Prod. | Nickel | secondary | 9.44e-07 | 4.78e-08 |
| LPG Production | Acetaldehyde | secondary | 8.73e-07 | 4.42e-08 |
| LPG Production | Propionaldehyde | secondary | 8.73e-07 | 4.42e-08 |
| LPG Production | Mercury | secondary | 8.69e-07 | 4.40e-08 |
| LPG Production | Cadmium | secondary | 8.10e-07 | 4.10e-08 |
| Japanese Electric Grid | Benzyl chloride | model/secondary | 8.00e-07 | 4.05e-08 |
| US electric grid | Chloroform | model/secondary | 7.79e-07 | 3.95e-08 |
| Fuel Oil #2 Prod. | PM-10 | secondary | 7.42e-07 | 3.76e-08 |
| US electric grid | Manganese | model/secondary | 7.28e-07 | 3.69e-08 |
| LPG Production | Cadmium cmpds | secondary | 6.94e-07 | 3.52e-08 |
| LPG Production | Di(2-ethylhexyl)phthalate | secondary | 6.71e-07 | 3.40e-08 |
| Glass/frit | PM | primary | 6.67e-07 | 3.38e-08 |
| Japanese Electric Grid | Chromium (VI) | model/secondary | 6.39e-07 | 3.24e-08 |
| Fuel Oil #2 Prod. | Antimony | secondary | 6.32e-07 | 3.20e-08 |
| LPG Production | Toluene | secondary | 6.23e-07 | 3.16e-08 |
| Japanese Electric Grid | Chloroform | model/secondary | 6.22e-07 | 3.15e-08 |
| CRT tube mfg. | Cyanide (-1) | primary | 6.06e-07 | 3.07e-08 |
| Fuel Oil #4 Prod. | Molybdenum | secondary | 6.03e-07 | 3.05e-08 |
| Glass/frit | Zinc (elemental) | primary | 5.55e-07 | 2.81e-08 |
| US electric grid | Chromium (VI) | model/secondary | 5.48e-07 | 2.78e-08 |
| Fuel Oil #6 Prod. | Aluminum (+3) | secondary | 4.79e-07 | 2.43e-08 |
| Natural Gas Prod. | Antimony | secondary | 4.44e-07 | 2.25e-08 |
| US electric grid | Acrolein | model/secondary | 4.15e-07 | 2.10e-08 |
| Fuel Oil #6 Prod. | Chromium (VI) | secondary | 4.09e-07 | 2.07e-08 |
| Fuel Oil #2 Prod. | Aluminum (+3) | secondary | 3.97e-07 | 2.01e-08 |
| LPG Production | 1,4-Dichlorobenzene | secondary | 3.57e-07 | 1.81e-08 |
| US electric grid | Copper | model/secondary | 3.57e-07 | 1.81e-08 |
| US electric grid | Methyl chloride | model/secondary | 3.36e-07 | 1.70e-08 |
| Fuel Oil #4 Prod. | Hydrofluoric acid | secondary | 3.36e-07 | 1.70e-08 |
| Japanese Electric Grid | Acrolein | model/secondary | 3.31e-07 | 1.68e-08 |
| Fuel Oil #4 Prod. | Zinc (elemental) | secondary | 3.31e-07 | 1.68e-08 |
| LPG Production | Dimethyl sulfate | secondary | 3.21e-07 | 1.63e-08 |
| Fuel Oil #6 Prod. | Copper | secondary | 3.17e-07 | 1.61e-08 |
| US electric grid | Fluoride | model/secondary | 3.12e-07 | 1.58e-08 |
| LPG Production | Isophorone | secondary | 3.08e-07 | 1.56e-08 |
| Natural Gas Prod. | Dimethylbenzanthracene | secondary | 2.87e-07 | 1.46e-08 |

## Table M-39. CRT LCIA Results for the Terrestrial Toxicity Impact Category

| Process Group | Material | LCI Data Type | Terrestrial Toxicity (tox-kg) | % of Total |
|---|---|---|---|---|
| Japanese Electric Grid | Methyl chloride | model/secondary | 2.69e-07 | 1.36e-08 |
| Fuel Oil #6 Prod. | 2-Chloroacetophenone | secondary | 2.60e-07 | 1.32e-08 |
| Fuel Oil #6 Prod. | Bromomethane | secondary | 2.57e-07 | 1.30e-08 |
| LPG Production | Methyl ethyl ketone | secondary | 2.48e-07 | 1.26e-08 |
| LPG Production | Tetrachloroethylene | secondary | 2.45e-07 | 1.24e-08 |
| US electric grid | Methyl hydrazine | model/secondary | 2.43e-07 | 1.23e-08 |
| Fuel Oil #6 Prod. | Nitrate | secondary | 2.43e-07 | 1.23e-08 |
| Japanese Electric Grid | Toluene | model/secondary | 2.39e-07 | 1.21e-08 |
| Glass/frit | Chromium | primary | 2.20e-07 | 1.12e-08 |
| Fuel Oil #4 Prod. | Ethane | secondary | 2.18e-07 | 1.10e-08 |
| LPG Production | Methyl methacrylate | secondary | 2.12e-07 | 1.08e-08 |
| US electric grid | Lead | model/secondary | 2.04e-07 | 1.03e-08 |
| Glass/frit | Nickel | primary | 1.95e-07 | 9.89e-09 |
| Japanese Electric Grid | Methyl hydrazine | model/secondary | 1.94e-07 | 9.84e-09 |
| US electric grid | Cobalt | model/secondary | 1.94e-07 | 9.83e-09 |
| US electric grid | Acetaldehyde | model/secondary | 1.87e-07 | 9.47e-09 |
| US electric grid | Propionaldehyde | model/secondary | 1.87e-07 | 9.47e-09 |
| Fuel Oil #4 Prod. | Pentane | secondary | 1.83e-07 | 9.26e-09 |
| Fuel Oil #6 Prod. | Dimethylbenzanthracene | secondary | 1.82e-07 | 9.24e-09 |
| Fuel Oil #6 Prod. | Manganese | secondary | 1.79e-07 | 9.07e-09 |
| LPG Production | 1,2-Dichloroethane | secondary | 1.77e-07 | 8.96e-09 |
| Fuel Oil #6 Prod. | Silicon | secondary | 1.75e-07 | 8.88e-09 |
| LPG Production | Bromoform | secondary | 1.73e-07 | 8.79e-09 |
| Fuel Oil #2 Prod. | Nitrate | secondary | 1.73e-07 | 8.75e-09 |
| LPG Production | Chromium (III) | secondary | 1.72e-07 | 8.70e-09 |
| LPG Production | Dichloromethane | secondary | 1.67e-07 | 8.48e-09 |
| Fuel Oil #4 Prod. | Phenol | secondary | 1.63e-07 | 8.26e-09 |
| Fuel Oil #2 Prod. | Chromium (VI) | secondary | 1.58e-07 | 8.02e-09 |
| Fuel Oil #6 Prod. | Naphthalene | secondary | 1.56e-07 | 7.91e-09 |
| Japanese Electric Grid | Acetaldehyde | model/secondary | 1.49e-07 | 7.56e-09 |
| Japanese Electric Grid | Propionaldehyde | model/secondary | 1.49e-07 | 7.56e-09 |
| US electric grid | Di(2-ethylhexyl)phthalate | model/secondary | 1.44e-07 | 7.27e-09 |
| Japanese Electric Grid | Cadmium | model/secondary | 1.41e-07 | 7.14e-09 |
| LPG Production | Chlorobenzene | secondary | 1.40e-07 | 7.10e-09 |
| LPG Production | Aromatic hydrocarbons | secondary | 1.40e-07 | 7.09e-09 |
| Fuel Oil #6 Prod. | Cyanide (-1) | secondary | 1.35e-07 | 6.84e-09 |
| LPG Production | Copper (+1 & +2) | secondary | 1.31e-07 | 6.64e-09 |
| Natural Gas Prod. | Naphthalene | secondary | 1.30e-07 | 6.59e-09 |
| Fuel Oil #4 Prod. | Hexane | secondary | 1.27e-07 | 6.42e-09 |
| Natural Gas Prod. | Nickel | secondary | 1.23e-07 | 6.22e-09 |
| US electric grid | Mercury | model/secondary | 1.20e-07 | 6.07e-09 |
| Japanese Electric Grid | Mercury | model/secondary | 1.18e-07 | 5.98e-09 |
| Japanese Electric Grid | Di(2-ethylhexyl)phthalate | model/secondary | 1.15e-07 | 5.81e-09 |
| Fuel Oil #2 Prod. | Copper | secondary | 1.12e-07 | 5.67e-09 |
| LPG Production | 2,4-Dinitrotoluene | secondary | 1.11e-07 | 5.65e-09 |
| Fuel Oil #4 Prod. | Nickel | secondary | 1.08e-07 | 5.46e-09 |
| Fuel Oil #2 Prod. | 2-Chloroacetophenone | secondary | 1.01e-07 | 5.11e-09 |
| Fuel Oil #6 Prod. | Lead | secondary | 9.99e-08 | 5.06e-09 |
| Fuel Oil #2 Prod. | Bromomethane | secondary | 9.99e-08 | 5.06e-09 |
| Fuel Oil #6 Prod. | Barium | secondary | 9.97e-08 | 5.05e-09 |

## Table M-39. CRT LCIA Results for the Terrestrial Toxicity Impact Category

| Process Group | Material | LCI Data Type | Terrestrial Toxicity (tox-kg) | % of Total |
|---|---|---|---|---|
| US electric grid | Hexane | model/secondary | 9.59e-08 | 4.86e-09 |
| Fuel Oil #2 Prod. | Dimethylbenzanthracene | secondary | 9.48e-08 | 4.80e-09 |
| Natural Gas Prod. | Chromium (VI) | secondary | 9.46e-08 | 4.79e-09 |
| Fuel Oil #4 Prod. | PM-10 | secondary | 8.70e-08 | 4.41e-09 |
| Fuel Oil #2 Prod. | Naphthalene | secondary | 7.72e-08 | 3.91e-09 |
| US electric grid | Cadmium | model/secondary | 7.69e-08 | 3.90e-09 |
| Japanese Electric Grid | Hexane | model/secondary | 7.66e-08 | 3.88e-09 |
| Fuel Oil #2 Prod. | Manganese | secondary | 7.00e-08 | 3.54e-09 |
| US electric grid | Dimethyl sulfate | model/secondary | 6.87e-08 | 3.48e-09 |
| LPG Production | o-xylene | secondary | 6.86e-08 | 3.48e-09 |
| US electric grid | Toluene | model/secondary | 6.78e-08 | 3.44e-09 |
| Natural Gas Prod. | Hydrogen sulfide | secondary | 6.73e-08 | 3.41e-09 |
| US electric grid | Isophorone | model/secondary | 6.59e-08 | 3.34e-09 |
| Fuel Oil #4 Prod. | Antimony | secondary | 5.92e-08 | 3.00e-09 |
| Natural Gas Prod. | Barium | secondary | 5.90e-08 | 2.99e-09 |
| Fuel Oil #2 Prod. | Silicon | secondary | 5.58e-08 | 2.83e-09 |
| Natural Gas Prod. | 2-Chloroacetophenone | secondary | 5.58e-08 | 2.83e-09 |
| LPG Production | Ethylbenzene | secondary | 5.56e-08 | 2.82e-09 |
| Natural Gas Prod. | Bromomethane | secondary | 5.52e-08 | 2.80e-09 |
| Fuel Oil #2 Prod. | Barium | secondary | 5.49e-08 | 2.78e-09 |
| Japanese Electric Grid | Dimethyl sulfate | model/secondary | 5.49e-08 | 2.78e-09 |
| Fuel Oil #6 Prod. | Barium cmpds | secondary | 5.37e-08 | 2.72e-09 |
| US electric grid | Methyl ethyl ketone | model/secondary | 5.32e-08 | 2.69e-09 |
| Glass/frit | Barium | primary | 5.29e-08 | 2.68e-09 |
| Natural Gas Prod. | Copper | secondary | 5.28e-08 | 2.67e-09 |
| Japanese Electric Grid | Isophorone | model/secondary | 5.26e-08 | 2.66e-09 |
| Fuel Oil #2 Prod. | Cyanide (-1) | secondary | 5.25e-08 | 2.66e-09 |
| US electric grid | Tetrachloroethylene | model/secondary | 5.23e-08 | 2.65e-09 |
| Fuel Oil #6 Prod. | Carbon disulfide | secondary | 4.82e-08 | 2.44e-09 |
| US electric grid | Methyl methacrylate | model/secondary | 4.54e-08 | 2.30e-09 |
| Fuel Oil #2 Prod. | Barium cmpds | secondary | 4.45e-08 | 2.26e-09 |
| Japanese Electric Grid | Methyl ethyl ketone | model/secondary | 4.24e-08 | 2.15e-09 |
| Japanese Electric Grid | Tetrachloroethylene | model/secondary | 4.18e-08 | 2.12e-09 |
| Fuel Oil #6 Prod. | Aluminum (elemental) | secondary | 4.01e-08 | 2.03e-09 |
| Natural Gas Prod. | Manganese | secondary | 3.95e-08 | 2.00e-09 |
| Fuel Oil #2 Prod. | Lead | secondary | 3.88e-08 | 1.97e-09 |
| US electric grid | 1,2-Dichloroethane | model/secondary | 3.79e-08 | 1.92e-09 |
| Fuel Oil #6 Prod. | Benzyl chloride | secondary | 3.78e-08 | 1.91e-09 |
| US electric grid | Bromoform | model/secondary | 3.71e-08 | 1.88e-09 |
| Japanese Electric Grid | Methyl methacrylate | model/secondary | 3.63e-08 | 1.84e-09 |
| US electric grid | Dichloromethane | model/secondary | 3.58e-08 | 1.82e-09 |
| Japanese Electric Grid | Beryllium | model/secondary | 3.23e-08 | 1.64e-09 |
| Fuel Oil #4 Prod. | Aluminum (+3) | secondary | 3.23e-08 | 1.64e-09 |
| US electric grid | Beryllium | model/secondary | 3.05e-08 | 1.54e-09 |
| Japanese Electric Grid | 1,2-Dichloroethane | model/secondary | 3.02e-08 | 1.53e-09 |
| US electric grid | Chlorobenzene | model/secondary | 3.00e-08 | 1.52e-09 |
| Japanese Electric Grid | Bromoform | model/secondary | 2.96e-08 | 1.50e-09 |
| Fuel Oil #6 Prod. | Chloroform | secondary | 2.94e-08 | 1.49e-09 |
| Natural Gas Prod. | Cyanide (-1) | secondary | 2.90e-08 | 1.47e-09 |
| Japanese Electric Grid | Dichloromethane | model/secondary | 2.86e-08 | 1.45e-09 |

## Table M-39. CRT LCIA Results for the Terrestrial Toxicity Impact Category

| Process Group | Material | LCI Data Type | Terrestrial Toxicity (tox-kg) | % of Total |
|---|---|---|---|---|
| LPG Production | Methyl tert-butyl ether | secondary | 2.79e-08 | 1.41e-09 |
| Japanese Electric Grid | Chlorobenzene | model/secondary | 2.39e-08 | 1.21e-09 |
| US electric grid | 2,4-Dinitrotoluene | model/secondary | 2.38e-08 | 1.21e-09 |
| LPG Production | Phenanthrene | secondary | 2.27e-08 | 1.15e-09 |
| Natural Gas Prod. | Lead | secondary | 2.17e-08 | 1.10e-09 |
| Fuel Oil #6 Prod. | Cobalt | secondary | 2.12e-08 | 1.08e-09 |
| LPG Production | Styrene | secondary | 2.03e-08 | 1.03e-09 |
| LPG Production | Vinyl acetate | secondary | 1.98e-08 | 1.01e-09 |
| Japanese Electric Grid | 2,4-Dinitrotoluene | model/secondary | 1.90e-08 | 9.62e-10 |
| Fuel Oil #2 Prod. | Carbon disulfide | secondary | 1.87e-08 | 9.50e-10 |
| LPG Production | 3-Methylcholanthrene | secondary | 1.87e-08 | 9.49e-10 |
| Fuel Oil #4 Prod. | Chromium (VI) | secondary | 1.69e-08 | 8.56e-10 |
| Fuel Oil #6 Prod. | Acrolein | secondary | 1.57e-08 | 7.93e-10 |
| Natural Gas Prod. | Nitrate | secondary | 1.50e-08 | 7.62e-10 |
| Fuel Oil #2 Prod. | Benzyl chloride | secondary | 1.47e-08 | 7.44e-10 |
| Fuel Oil #4 Prod. | Nitrate | secondary | 1.47e-08 | 7.43e-10 |
| Natural Gas Prod. | Phenol | secondary | 1.46e-08 | 7.39e-10 |
| Glass/frit | Copper | primary | 1.42e-08 | 7.20e-10 |
| Japanese Electric Grid | Cumene hydroperoxide | model/secondary | 1.34e-08 | 6.80e-10 |
| Fuel Oil #2 Prod. | Aluminum (elemental) | secondary | 1.28e-08 | 6.47e-10 |
| Fuel Oil #6 Prod. | Methyl chloride | secondary | 1.27e-08 | 6.42e-10 |
| Fuel Oil #4 Prod. | Copper | secondary | 1.25e-08 | 6.32e-10 |
| US electric grid | Ethylbenzene | model/secondary | 1.18e-08 | 5.99e-10 |
| LPG Production | Zinc (+2) | secondary | 1.17e-08 | 5.94e-10 |
| Fuel Oil #2 Prod. | Chloroform | secondary | 1.14e-08 | 5.79e-10 |
| Fuel Oil #6 Prod. | Beryllium | secondary | 1.12e-08 | 5.67e-10 |
| Fuel Oil #4 Prod. | 2-Chloroacetophenone | secondary | 1.08e-08 | 5.45e-10 |
| Fuel Oil #4 Prod. | Bromomethane | secondary | 1.07e-08 | 5.40e-10 |
| Japanese Electric Grid | Ethylbenzene | model/secondary | 1.04e-08 | 5.26e-10 |
| Natural Gas Prod. | Carbon disulfide | secondary | 1.04e-08 | 5.25e-10 |
| Fuel Oil #6 Prod. | Methyl hydrazine | secondary | 9.18e-09 | 4.65e-10 |
| Fuel Oil #4 Prod. | Dimethylbenzanthracene | secondary | 8.97e-09 | 4.54e-10 |
| Natural Gas Prod. | Toluene | secondary | 8.63e-09 | 4.37e-10 |
| Natural Gas Prod. | Benzyl chloride | secondary | 8.12e-09 | 4.12e-10 |
| LPG Production | Ethylene dibromide | secondary | 8.03e-09 | 4.07e-10 |
| Fuel Oil #2 Prod. | Cobalt | secondary | 7.95e-09 | 4.03e-10 |
| LPG Production | 1,1,1-Trichloroethane | secondary | 7.57e-09 | 3.83e-10 |
| Fuel Oil #4 Prod. | Naphthalene | secondary | 7.45e-09 | 3.77e-10 |
| Fuel Oil #4 Prod. | Manganese | secondary | 7.44e-09 | 3.77e-10 |
| Fuel Oil #6 Prod. | Acetaldehyde | secondary | 7.05e-09 | 3.57e-10 |
| Fuel Oil #6 Prod. | Propionaldehyde | secondary | 7.05e-09 | 3.57e-10 |
| Fuel Oil #6 Prod. | Mercury | secondary | 6.94e-09 | 3.52e-10 |
| Fuel Oil #4 Prod. | Silicon | secondary | 6.54e-09 | 3.31e-10 |
| Fuel Oil #6 Prod. | Cadmium | secondary | 6.36e-09 | 3.22e-10 |
| Natural Gas Prod. | Chloroform | secondary | 6.32e-09 | 3.20e-10 |
| Fuel Oil #2 Prod. | Acrolein | secondary | 6.09e-09 | 3.08e-10 |
| LPG Production | 2-Methylnaphthalene | secondary | 6.01e-09 | 3.04e-10 |
| US electric grid | Methyl tert-butyl ether | model/secondary | 5.96e-09 | 3.02e-10 |
| Fuel Oil #4 Prod. | Cyanide (-1) | secondary | 5.60e-09 | 2.83e-10 |
| Fuel Oil #6 Prod. | Di(2-ethylhexyl)phthalate | secondary | 5.41e-09 | 2.74e-10 |

## Table M-39. CRT LCIA Results for the Terrestrial Toxicity Impact Category

| Process Group | Material | LCI Data Type | Terrestrial Toxicity (tox-kg) | % of Total |
|---|---|---|---|---|
| LPG Production | Ethyl Chloride | secondary | 5.36e-09 | 2.72e-10 |
| LPG Production | Chlorine | secondary | 5.32e-09 | 2.70e-10 |
| Japanese Electric Grid | Phenanthrene | model/secondary | 5.21e-09 | 2.64e-10 |
| Fuel Oil #4 Prod. | Barium | secondary | 5.08e-09 | 2.58e-10 |
| Natural Gas Prod. | PM-10 | secondary | 4.94e-09 | 2.50e-10 |
| Fuel Oil #2 Prod. | Methyl chloride | secondary | 4.93e-09 | 2.50e-10 |
| Japanese Electric Grid | Methyl tert-butyl ether | model/secondary | 4.75e-09 | 2.40e-10 |
| Natural Gas Prod. | o-xylene | secondary | 4.60e-09 | 2.33e-10 |
| US electric grid | Phenol | model/secondary | 4.54e-09 | 2.30e-10 |
| LPG Production | Cumene | secondary | 4.54e-09 | 2.30e-10 |
| Japanese Electric Grid | Chromium (III) | model/secondary | 4.48e-09 | 2.27e-10 |
| Fuel Oil #2 Prod. | Beryllium | secondary | 4.40e-09 | 2.23e-10 |
| US electric grid | Styrene | model/secondary | 4.35e-09 | 2.20e-10 |
| US electric grid | Vinyl acetate | model/secondary | 4.25e-09 | 2.15e-10 |
| Fuel Oil #6 Prod. | Toluene | secondary | 4.19e-09 | 2.12e-10 |
| Fuel Oil #4 Prod. | Lead | secondary | 4.14e-09 | 2.10e-10 |
| US electric grid | Phenanthrene | model/secondary | 4.00e-09 | 2.03e-10 |
| Japanese Electric Grid | 1,1,1-Trichloroethane | model/secondary | 3.66e-09 | 1.85e-10 |
| Japanese Electric Grid | Phenol | model/secondary | 3.63e-09 | 1.84e-10 |
| Fuel Oil #4 Prod. | Barium cmpds | secondary | 3.62e-09 | 1.83e-10 |
| Fuel Oil #2 Prod. | Methyl hydrazine | secondary | 3.57e-09 | 1.81e-10 |
| US electric grid | Xylene (mixed isomers) | model/secondary | 3.52e-09 | 1.78e-10 |
| Japanese Electric Grid | Styrene | model/secondary | 3.47e-09 | 1.76e-10 |
| Japanese Electric Grid | Vinyl acetate | model/secondary | 3.38e-09 | 1.71e-10 |
| Natural Gas Prod. | Acrolein | secondary | 3.37e-09 | 1.71e-10 |
| Natural Gas Prod. | 1,4-Dichlorobenzene | secondary | 3.22e-09 | 1.63e-10 |
| US electric grid | Chromium (III) | model/secondary | 3.15e-09 | 1.59e-10 |
| Natural Gas Prod. | Aluminum (+3) | secondary | 2.86e-09 | 1.45e-10 |
| LPG Production | Acetophenone | secondary | 2.82e-09 | 1.43e-10 |
| Japanese Electric Grid | Xylene (mixed isomers) | model/secondary | 2.81e-09 | 1.42e-10 |
| Natural Gas Prod. | Beryllium | secondary | 2.80e-09 | 1.42e-10 |
| Fuel Oil #2 Prod. | Acetaldehyde | secondary | 2.74e-09 | 1.39e-10 |
| Fuel Oil #2 Prod. | Propionaldehyde | secondary | 2.74e-09 | 1.39e-10 |
| Natural Gas Prod. | Methyl chloride | secondary | 2.73e-09 | 1.38e-10 |
| Fuel Oil #2 Prod. | Mercury | secondary | 2.72e-09 | 1.38e-10 |
| LPG Production | Biphenyl | secondary | 2.71e-09 | 1.37e-10 |
| Natural Gas Prod. | Cobalt | secondary | 2.64e-09 | 1.34e-10 |
| Fuel Oil #6 Prod. | Dimethyl sulfate | secondary | 2.59e-09 | 1.31e-10 |
| Fuel Oil #2 Prod. | Cadmium | secondary | 2.53e-09 | 1.28e-10 |
| Fuel Oil #6 Prod. | Isophorone | secondary | 2.48e-09 | 1.26e-10 |
| Fuel Oil #6 Prod. | Cadmium cmpds | secondary | 2.35e-09 | 1.19e-10 |
| LPG Production | Acenaphthylene | secondary | 2.14e-09 | 1.08e-10 |
| Fuel Oil #2 Prod. | Di(2-ethylhexyl)phthalate | secondary | 2.11e-09 | 1.07e-10 |
| Fuel Oil #6 Prod. | 1,4-Dichlorobenzene | secondary | 2.04e-09 | 1.03e-10 |
| Fuel Oil #6 Prod. | Methyl ethyl ketone | secondary | 2.00e-09 | 1.02e-10 |
| Fuel Oil #4 Prod. | Carbon disulfide | secondary | 2.00e-09 | 1.01e-10 |
| Fuel Oil #6 Prod. | Tetrachloroethylene | secondary | 1.97e-09 | 1.00e-10 |
| Natural Gas Prod. | Methyl hydrazine | secondary | 1.97e-09 | 1.00e-10 |
| Fuel Oil #2 Prod. | Cadmium cmpds | secondary | 1.95e-09 | 9.87e-11 |
| Fuel Oil #2 Prod. | Toluene | secondary | 1.90e-09 | 9.61e-11 |

## Table M-39. CRT LCIA Results for the Terrestrial Toxicity Impact Category

| Process Group | Material | LCI Data Type | Terrestrial Toxicity (tox-kg) | % of Total |
|---|---|---|---|---|
| Natural Gas Prod. | Mercury | secondary | 1.88e-09 | 9.54e-11 |
| LPG Production | Acenaphthene | secondary | 1.78e-09 | 9.03e-11 |
| US electric grid | 1,1,1-Trichloroethane | model/secondary | 1.73e-09 | 8.77e-11 |
| US electric grid | Ethylene dibromide | model/secondary | 1.72e-09 | 8.70e-11 |
| Fuel Oil #6 Prod. | Methyl methacrylate | secondary | 1.71e-09 | 8.68e-11 |
| Fuel Oil #4 Prod. | Benzyl chloride | secondary | 1.57e-09 | 7.94e-11 |
| Natural Gas Prod. | Acetaldehyde | secondary | 1.51e-09 | 7.67e-11 |
| Natural Gas Prod. | Propionaldehyde | secondary | 1.51e-09 | 7.67e-11 |
| Fuel Oil #4 Prod. | Aluminum (elemental) | secondary | 1.50e-09 | 7.58e-11 |
| Japanese Electric Grid | Acenaphthene | model/secondary | 1.47e-09 | 7.44e-11 |
| Fuel Oil #6 Prod. | 1,2-Dichloroethane | secondary | 1.43e-09 | 7.23e-11 |
| Natural Gas Prod. | Cadmium | secondary | 1.40e-09 | 7.11e-11 |
| Fuel Oil #6 Prod. | Bromoform | secondary | 1.40e-09 | 7.09e-11 |
| LPG Production | Nickel cmpds | secondary | 1.39e-09 | 7.04e-11 |
| Japanese Electric Grid | Ethylene dibromide | model/secondary | 1.37e-09 | 6.95e-11 |
| Fuel Oil #6 Prod. | Dichloromethane | secondary | 1.35e-09 | 6.85e-11 |
| Japanese Electric Grid | o-xylene | model/secondary | 1.28e-09 | 6.50e-11 |
| Glass/frit | Nickel | primary | 1.27e-09 | 6.43e-11 |
| LPG Production | Benzo[a]anthracene | secondary | 1.25e-09 | 6.32e-11 |
| Fuel Oil #4 Prod. | Chloroform | secondary | 1.22e-09 | 6.17e-11 |
| LPG Production | Chrysene | secondary | 1.20e-09 | 6.07e-11 |
| LPG Production | Lead cmpds | secondary | 1.17e-09 | 5.91e-11 |
| Natural Gas Prod. | Di(2-ethylhexyl)phthalate | secondary | 1.16e-09 | 5.90e-11 |
| US electric grid | Ethyl Chloride | model/secondary | 1.15e-09 | 5.81e-11 |
| Fuel Oil #6 Prod. | Chlorobenzene | secondary | 1.13e-09 | 5.73e-11 |
| Fuel Oil #2 Prod. | 1,4-Dichlorobenzene | secondary | 1.06e-09 | 5.38e-11 |
| Fuel Oil #2 Prod. | Dimethyl sulfate | secondary | 1.01e-09 | 5.10e-11 |
| US electric grid | Cumene | model/secondary | 9.71e-10 | 4.92e-11 |
| Fuel Oil #2 Prod. | Isophorone | secondary | 9.66e-10 | 4.89e-11 |
| LPG Production | Indeno(1,2,3-cd)pyrene | secondary | 9.29e-10 | 4.70e-11 |
| Japanese Electric Grid | Ethyl Chloride | model/secondary | 9.16e-10 | 4.64e-11 |
| Fuel Oil #6 Prod. | 2,4-Dinitrotoluene | secondary | 8.99e-10 | 4.56e-11 |
| Fuel Oil #4 Prod. | Cobalt | secondary | 8.62e-10 | 4.37e-11 |
| Japanese Electric Grid | Benzo[a]anthracene | model/secondary | 8.00e-10 | 4.05e-11 |
| Fuel Oil #2 Prod. | Methyl ethyl ketone | secondary | 7.79e-10 | 3.95e-11 |
| Fuel Oil #2 Prod. | Tetrachloroethylene | secondary | 7.67e-10 | 3.89e-11 |
| LPG Production | Benzo[b,j,k]fluoranthene | secondary | 7.36e-10 | 3.73e-11 |
| LPG Production | Mercury compounds | secondary | 7.07e-10 | 3.58e-11 |
| Fuel Oil #6 Prod. | Chromium (III) | secondary | 6.96e-10 | 3.52e-11 |
| LPG Production | Benzo[a]pyrene | secondary | 6.83e-10 | 3.46e-11 |
| Fuel Oil #2 Prod. | Methyl methacrylate | secondary | 6.66e-10 | 3.37e-11 |
| LPG Production | Fluorene | secondary | 6.60e-10 | 3.35e-11 |
| Fuel Oil #4 Prod. | Acrolein | secondary | 6.49e-10 | 3.29e-11 |
| US electric grid | Acetophenone | model/secondary | 6.04e-10 | 3.06e-11 |
| US electric grid | Biphenyl | model/secondary | 5.79e-10 | 2.93e-11 |
| LPG Production | Pyrene | secondary | 5.71e-10 | 2.89e-11 |
| Natural Gas Prod. | Dimethyl sulfate | secondary | 5.57e-10 | 2.82e-11 |
| Fuel Oil #2 Prod. | 1,2-Dichloroethane | secondary | 5.55e-10 | 2.81e-11 |
| LPG Production | Benzo[g,h,i]perylene | secondary | 5.55e-10 | 2.81e-11 |
| Fuel Oil #2 Prod. | Bromoform | secondary | 5.44e-10 | 2.76e-11 |

## Table M-39. CRT LCIA Results for the Terrestrial Toxicity Impact Category

| Process Group | Material | LCI Data Type | Terrestrial Toxicity (tox-kg) | % of Total |
|---|---|---|---|---|
| LPG Production | Fluoranthene | secondary | 5.39e-10 | 2.73e-11 |
| Japanese Electric Grid | Chrysene | model/secondary | 5.35e-10 | 2.71e-11 |
| Natural Gas Prod. | Isophorone | secondary | 5.34e-10 | 2.71e-11 |
| Fuel Oil #4 Prod. | Methyl chloride | secondary | 5.26e-10 | 2.66e-11 |
| Fuel Oil #2 Prod. | Dichloromethane | secondary | 5.25e-10 | 2.66e-11 |
| Natural Gas Prod. | Zinc (+2) | secondary | 5.24e-10 | 2.66e-11 |
| LPG Production | HALON-1301 | secondary | 5.08e-10 | 2.57e-11 |
| LPG Production | Benzo[b]fluoranthene | secondary | 4.99e-10 | 2.53e-11 |
| Japanese Electric Grid | Acetophenone | model/secondary | 4.82e-10 | 2.44e-11 |
| Fuel Oil #6 Prod. | Aromatic hydrocarbons | secondary | 4.74e-10 | 2.40e-11 |
| Natural Gas Prod. | Chlorine | secondary | 4.73e-10 | 2.40e-11 |
| Fuel Oil #4 Prod. | Beryllium | secondary | 4.67e-10 | 2.36e-11 |
| Glass/frit | Chromium | primary | 4.67e-10 | 2.36e-11 |
| Glass/frit | Manganese | primary | 4.67e-10 | 2.36e-11 |
| Japanese Electric Grid | Biphenyl | model/secondary | 4.62e-10 | 2.34e-11 |
| Japanese Electric Grid | Indeno(1,2,3-cd)pyrene | model/secondary | 4.48e-10 | 2.27e-11 |
| Fuel Oil #6 Prod. | Ethylbenzene | secondary | 4.47e-10 | 2.26e-11 |
| Fuel Oil #6 Prod. | Copper (+1 & +2) | secondary | 4.43e-10 | 2.25e-11 |
| Fuel Oil #2 Prod. | Chlorobenzene | secondary | 4.40e-10 | 2.23e-11 |
| Natural Gas Prod. | Methyl ethyl ketone | secondary | 4.31e-10 | 2.18e-11 |
| Japanese Electric Grid | Benzo[g,h,i]perylene | model/secondary | 4.30e-10 | 2.18e-11 |
| Fuel Oil #6 Prod. | o-xylene | secondary | 4.29e-10 | 2.17e-11 |
| Natural Gas Prod. | Tetrachloroethylene | secondary | 4.24e-10 | 2.15e-11 |
| Fuel Oil #2 Prod. | Aromatic hydrocarbons | secondary | 3.93e-10 | 1.99e-11 |
| Japanese Electric Grid | Benzo[b,j,k]fluoranthene | model/secondary | 3.89e-10 | 1.97e-11 |
| Fuel Oil #4 Prod. | Methyl hydrazine | secondary | 3.81e-10 | 1.93e-11 |
| Natural Gas Prod. | Silicon | secondary | 3.71e-10 | 1.88e-11 |
| Natural Gas Prod. | Methyl methacrylate | secondary | 3.68e-10 | 1.87e-11 |
| Fuel Oil #2 Prod. | Copper (+1 & +2) | secondary | 3.68e-10 | 1.86e-11 |
| US electric grid | Acenaphthylene | model/secondary | 3.60e-10 | 1.82e-11 |
| LPG Production | Dibenzo[a,h]anthracene | secondary | 3.55e-10 | 1.80e-11 |
| Fuel Oil #2 Prod. | 2,4-Dinitrotoluene | secondary | 3.50e-10 | 1.77e-11 |
| Japanese Electric Grid | Acenaphthylene | model/secondary | 3.29e-10 | 1.67e-11 |
| Natural Gas Prod. | Barium cmpds | secondary | 3.21e-10 | 1.63e-11 |
| Glass/frit | Lead | primary | 3.20e-10 | 1.62e-11 |
| US electric grid | Acenaphthene | model/secondary | 3.08e-10 | 1.56e-11 |
| Natural Gas Prod. | 1,2-Dichloroethane | secondary | 3.07e-10 | 1.55e-11 |
| Natural Gas Prod. | Bromoform | secondary | 3.01e-10 | 1.52e-11 |
| Japanese Electric Grid | Dibenzo[a,h]anthracene | model/secondary | 2.96e-10 | 1.50e-11 |
| Fuel Oil #4 Prod. | Acetaldehyde | secondary | 2.92e-10 | 1.48e-11 |
| Fuel Oil #4 Prod. | Propionaldehyde | secondary | 2.92e-10 | 1.48e-11 |
| Natural Gas Prod. | Dichloromethane | secondary | 2.90e-10 | 1.47e-11 |
| Fuel Oil #4 Prod. | Mercury | secondary | 2.89e-10 | 1.46e-11 |
| Fuel Oil #2 Prod. | Chromium (III) | secondary | 2.70e-10 | 1.37e-11 |
| Fuel Oil #4 Prod. | Cadmium | secondary | 2.67e-10 | 1.35e-11 |
| Natural Gas Prod. | Chlorobenzene | secondary | 2.43e-10 | 1.23e-11 |
| Japanese Electric Grid | 2-Methylnaphthalene | model/secondary | 2.38e-10 | 1.20e-11 |
| Fuel Oil #6 Prod. | Methyl tert-butyl ether | secondary | 2.25e-10 | 1.14e-11 |
| Fuel Oil #4 Prod. | Di(2-ethylhexyl)phthalate | secondary | 2.25e-10 | 1.14e-11 |
| Fuel Oil #2 Prod. | o-xylene | secondary | 2.06e-10 | 1.05e-11 |

## Table M-39. CRT LCIA Results for the Terrestrial Toxicity Impact Category

| Process Group | Material | LCI Data Type | Terrestrial Toxicity (tox-kg) | % of Total |
|---|---|---|---|---|
| Japanese Electric Grid | Pyrene | model/secondary | 2.00e-10 | 1.01e-11 |
| Natural Gas Prod. | 2,4-Dinitrotoluene | secondary | 1.93e-10 | 9.80e-12 |
| Fuel Oil #4 Prod. | Toluene | secondary | 1.90e-10 | 9.60e-12 |
| Fuel Oil #2 Prod. | Ethylbenzene | secondary | 1.74e-10 | 8.83e-12 |
| Japanese Electric Grid | Fluorene | model/secondary | 1.74e-10 | 8.82e-12 |
| Fuel Oil #6 Prod. | Phenanthrene | secondary | 1.71e-10 | 8.68e-12 |
| US electric grid | Benzo[b,j,k]fluoranthene | model/secondary | 1.70e-10 | 8.60e-12 |
| Natural Gas Prod. | 3-Methylcholanthrene | secondary | 1.69e-10 | 8.55e-12 |
| Japanese Electric Grid | Fluoranthene | model/secondary | 1.66e-10 | 8.43e-12 |
| Fuel Oil #6 Prod. | Styrene | secondary | 1.64e-10 | 8.31e-12 |
| US electric grid | Chrysene | model/secondary | 1.63e-10 | 8.26e-12 |
| Natural Gas Prod. | Chromium (III) | secondary | 1.61e-10 | 8.16e-12 |
| Fuel Oil #6 Prod. | Vinyl acetate | secondary | 1.60e-10 | 8.11e-12 |
| Fuel Oil #4 Prod. | Cadmium cmpds | secondary | 1.58e-10 | 8.02e-12 |
| US electric grid | Benzo[a]anthracene | model/secondary | 1.48e-10 | 7.50e-12 |
| LPG Production | 5-Methyl chrysene | secondary | 1.47e-10 | 7.46e-12 |
| Glass/frit | Cobalt | primary | 1.43e-10 | 7.26e-12 |
| US electric grid | Fluorene | model/secondary | 1.28e-10 | 6.46e-12 |
| LPG Production | Halogenated matter (organic) | secondary | 1.17e-10 | 5.91e-12 |
| Fuel Oil #4 Prod. | Dimethyl sulfate | secondary | 1.07e-10 | 5.44e-12 |
| Fuel Oil #6 Prod. | 3-Methylcholanthrene | secondary | 1.07e-10 | 5.43e-12 |
| US electric grid | Indeno(1,2,3-cd)pyrene | model/secondary | 1.05e-10 | 5.33e-12 |
| Fuel Oil #4 Prod. | Isophorone | secondary | 1.03e-10 | 5.22e-12 |
| US electric grid | Fluoranthene | model/secondary | 1.02e-10 | 5.17e-12 |
| Fuel Oil #4 Prod. | 1,4-Dichlorobenzene | secondary | 1.00e-10 | 5.09e-12 |
| Natural Gas Prod. | Ethylbenzene | secondary | 9.66e-11 | 4.89e-12 |
| Fuel Oil #2 Prod. | Methyl tert-butyl ether | secondary | 8.74e-11 | 4.43e-12 |
| Natural Gas Prod. | Aluminum (elemental) | secondary | 8.50e-11 | 4.30e-12 |
| US electric grid | Pyrene | model/secondary | 8.43e-11 | 4.27e-12 |
| Fuel Oil #4 Prod. | Methyl ethyl ketone | secondary | 8.31e-11 | 4.21e-12 |
| Fuel Oil #4 Prod. | Tetrachloroethylene | secondary | 8.18e-11 | 4.14e-12 |
| Fuel Oil #4 Prod. | Methyl methacrylate | secondary | 7.10e-11 | 3.60e-12 |
| Natural Gas Prod. | Phenanthrene | secondary | 7.05e-11 | 3.57e-12 |
| Fuel Oil #2 Prod. | Phenanthrene | secondary | 7.03e-11 | 3.56e-12 |
| Fuel Oil #6 Prod. | Ethylene dibromide | secondary | 6.48e-11 | 3.28e-12 |
| Fuel Oil #2 Prod. | Styrene | secondary | 6.38e-11 | 3.23e-12 |
| Fuel Oil #2 Prod. | Vinyl acetate | secondary | 6.23e-11 | 3.15e-12 |
| Fuel Oil #6 Prod. | 1,1,1-Trichloroethane | secondary | 6.11e-11 | 3.09e-12 |
| US electric grid | o-xylene | model/secondary | 6.06e-11 | 3.07e-12 |
| Fuel Oil #4 Prod. | 1,2-Dichloroethane | secondary | 5.92e-11 | 3.00e-12 |
| Fuel Oil #4 Prod. | Bromoform | secondary | 5.80e-11 | 2.94e-12 |
| US electric grid | Benzo[g,h,i]perylene | model/secondary | 5.75e-11 | 2.91e-12 |
| Fuel Oil #4 Prod. | Dichloromethane | secondary | 5.60e-11 | 2.84e-12 |
| Fuel Oil #2 Prod. | 3-Methylcholanthrene | secondary | 5.57e-11 | 2.82e-12 |
| US electric grid | Benzo[a]pyrene | model/secondary | 5.44e-11 | 2.76e-12 |
| Natural Gas Prod. | 2-Methylnaphthalene | secondary | 5.41e-11 | 2.74e-12 |
| Fuel Oil #6 Prod. | Zinc (+2) | secondary | 5.33e-11 | 2.70e-12 |
| Natural Gas Prod. | Methyl tert-butyl ether | secondary | 4.83e-11 | 2.45e-12 |
| Fuel Oil #4 Prod. | Chlorobenzene | secondary | 4.69e-11 | 2.37e-12 |
| Japanese Electric Grid | Benzo[a]pyrene | model/secondary | 4.35e-11 | 2.20e-12 |

## Table M-39. CRT LCIA Results for the Terrestrial Toxicity Impact Category

| Process Group | Material | LCI Data Type | Terrestrial Toxicity (tox-kg) | % of Total |
|---|---|---|---|---|
| Fuel Oil #6 Prod. | Ethyl Chloride | secondary | 4.33e-11 | 2.19e-12 |
| US electric grid | 2-Methylnaphthalene | model/secondary | 4.26e-11 | 2.16e-12 |
| Fuel Oil #4 Prod. | 2,4-Dinitrotoluene | secondary | 3.73e-11 | 1.89e-12 |
| Fuel Oil #6 Prod. | Cumene | secondary | 3.66e-11 | 1.85e-12 |
| Natural Gas Prod. | Styrene | secondary | 3.53e-11 | 1.79e-12 |
| Natural Gas Prod. | Vinyl acetate | secondary | 3.44e-11 | 1.74e-12 |
| Fuel Oil #6 Prod. | 2-Methylnaphthalene | secondary | 3.43e-11 | 1.74e-12 |
| Fuel Oil #2 Prod. | Zinc (+2) | secondary | 3.39e-11 | 1.72e-12 |
| Fuel Oil #4 Prod. | Aromatic hydrocarbons | secondary | 3.19e-11 | 1.62e-12 |
| US electric grid | 5-Methyl chrysene | model/secondary | 3.15e-11 | 1.60e-12 |
| Fuel Oil #4 Prod. | Copper (+1 & +2) | secondary | 2.99e-11 | 1.51e-12 |
| Fuel Oil #6 Prod. | Chlorine | secondary | 2.96e-11 | 1.50e-12 |
| Fuel Oil #4 Prod. | Chromium (III) | secondary | 2.88e-11 | 1.46e-12 |
| Fuel Oil #2 Prod. | Ethylene dibromide | secondary | 2.52e-11 | 1.28e-12 |
| Japanese Electric Grid | 5-Methyl chrysene | model/secondary | 2.51e-11 | 1.27e-12 |
| LPG Production | Anthracene | secondary | 2.48e-11 | 1.26e-12 |
| Fuel Oil #2 Prod. | 1,1,1-Trichloroethane | secondary | 2.37e-11 | 1.20e-12 |
| Fuel Oil #6 Prod. | Acetophenone | secondary | 2.28e-11 | 1.15e-12 |
| Fuel Oil #6 Prod. | Biphenyl | secondary | 2.18e-11 | 1.11e-12 |
| Fuel Oil #4 Prod. | o-xylene | secondary | 2.01e-11 | 1.02e-12 |
| Fuel Oil #4 Prod. | Ethylbenzene | secondary | 1.86e-11 | 9.40e-13 |
| Fuel Oil #2 Prod. | 2-Methylnaphthalene | secondary | 1.78e-11 | 9.04e-13 |
| Fuel Oil #2 Prod. | Ethyl Chloride | secondary | 1.68e-11 | 8.52e-13 |
| Fuel Oil #6 Prod. | Acenaphthylene | secondary | 1.61e-11 | 8.17e-13 |
| Fuel Oil #2 Prod. | Chlorine | secondary | 1.56e-11 | 7.90e-13 |
| Fuel Oil #2 Prod. | Cumene | secondary | 1.42e-11 | 7.21e-13 |
| Natural Gas Prod. | Cadmium cmpds | secondary | 1.40e-11 | 7.11e-13 |
| US electric grid | Dibenzo[a,h]anthracene | model/secondary | 1.40e-11 | 7.07e-13 |
| Natural Gas Prod. | Ethylene dibromide | secondary | 1.39e-11 | 7.06e-13 |
| Natural Gas Prod. | 1,1,1-Trichloroethane | secondary | 1.31e-11 | 6.65e-13 |
| Fuel Oil #6 Prod. | Acenaphthene | secondary | 1.19e-11 | 6.01e-13 |
| Fuel Oil #4 Prod. | Methyl tert-butyl ether | secondary | 9.32e-12 | 4.72e-13 |
| Natural Gas Prod. | Ethyl Chloride | secondary | 9.30e-12 | 4.71e-13 |
| Fuel Oil #2 Prod. | Acetophenone | secondary | 8.86e-12 | 4.49e-13 |
| Fuel Oil #2 Prod. | Biphenyl | secondary | 8.49e-12 | 4.30e-13 |
| Fuel Oil #6 Prod. | Chrysene | secondary | 8.24e-12 | 4.18e-13 |
| Natural Gas Prod. | Cumene | secondary | 7.87e-12 | 3.99e-13 |
| Fuel Oil #6 Prod. | Benzo[a]anthracene | secondary | 7.80e-12 | 3.95e-13 |
| Fuel Oil #4 Prod. | Phenanthrene | secondary | 7.32e-12 | 3.71e-13 |
| Natural Gas Prod. | Acenaphthylene | secondary | 7.00e-12 | 3.54e-13 |
| Fuel Oil #4 Prod. | Styrene | secondary | 6.80e-12 | 3.45e-13 |
| Fuel Oil #4 Prod. | Vinyl acetate | secondary | 6.64e-12 | 3.36e-13 |
| Fuel Oil #2 Prod. | Acenaphthylene | secondary | 6.63e-12 | 3.36e-13 |
| Fuel Oil #6 Prod. | Indeno(1,2,3-cd)pyrene | secondary | 6.11e-12 | 3.09e-13 |
| Fuel Oil #6 Prod. | Benzo[b,j,k]fluoranthene | secondary | 5.94e-12 | 3.01e-13 |
| Natural Gas Prod. | Benzo[a]anthracene | secondary | 5.61e-12 | 2.84e-13 |
| Japanese Electric Grid | Anthracene | model/secondary | 5.42e-12 | 2.75e-13 |
| Fuel Oil #2 Prod. | Acenaphthene | secondary | 5.41e-12 | 2.74e-13 |
| Natural Gas Prod. | Chrysene | secondary | 5.40e-12 | 2.74e-13 |
| Fuel Oil #4 Prod. | 3-Methylcholanthrene | secondary | 5.27e-12 | 2.67e-13 |

## Table M-39. CRT LCIA Results for the Terrestrial Toxicity Impact Category

| Process Group | Material | LCI Data Type | Terrestrial Toxicity (tox-kg) | % of Total |
|---|---|---|---|---|
| Fuel Oil #6 Prod. | Fluorene | secondary | 5.11e-12 | 2.59e-13 |
| Fuel Oil #6 Prod. | Benzo[a]pyrene | secondary | 5.10e-12 | 2.58e-13 |
| Natural Gas Prod. | Indeno(1,2,3-cd)pyrene | secondary | 4.93e-12 | 2.50e-13 |
| Natural Gas Prod. | Acetophenone | secondary | 4.90e-12 | 2.48e-13 |
| Fuel Oil #6 Prod. | Nickel cmpds | secondary | 4.70e-12 | 2.38e-13 |
| Natural Gas Prod. | Biphenyl | secondary | 4.70e-12 | 2.38e-13 |
| Natural Gas Prod. | Acenaphthene | secondary | 4.50e-12 | 2.28e-13 |
| Natural Gas Prod. | Benzo[b]fluoranthene | secondary | 4.17e-12 | 2.11e-13 |
| Fuel Oil #6 Prod. | Fluoranthene | secondary | 4.11e-12 | 2.08e-13 |
| Fuel Oil #6 Prod. | Pyrene | secondary | 4.04e-12 | 2.05e-13 |
| Fuel Oil #6 Prod. | Lead cmpds | secondary | 3.95e-12 | 2.00e-13 |
| Fuel Oil #2 Prod. | Nickel cmpds | secondary | 3.90e-12 | 1.97e-13 |
| Fuel Oil #2 Prod. | Benzo[a]anthracene | secondary | 3.76e-12 | 1.90e-13 |
| US electric grid | Anthracene | model/secondary | 3.70e-12 | 1.87e-13 |
| Fuel Oil #2 Prod. | Chrysene | secondary | 3.66e-12 | 1.85e-13 |
| Fuel Oil #6 Prod. | Benzo[g,h,i]perylene | secondary | 3.43e-12 | 1.74e-13 |
| Fuel Oil #2 Prod. | Lead cmpds | secondary | 3.27e-12 | 1.66e-13 |
| Natural Gas Prod. | Benzo[g,h,i]perylene | secondary | 3.19e-12 | 1.62e-13 |
| Natural Gas Prod. | Benzo[a]pyrene | secondary | 3.15e-12 | 1.59e-13 |
| Fuel Oil #4 Prod. | Zinc (+2) | secondary | 2.98e-12 | 1.51e-13 |
| Natural Gas Prod. | Dibenzo[a,h]anthracene | secondary | 2.83e-12 | 1.44e-13 |
| Natural Gas Prod. | Aromatic hydrocarbons | secondary | 2.83e-12 | 1.43e-13 |
| Fuel Oil #2 Prod. | Indeno(1,2,3-cd)pyrene | secondary | 2.82e-12 | 1.43e-13 |
| Fuel Oil #6 Prod. | Benzo[b]fluoranthene | secondary | 2.74e-12 | 1.39e-13 |
| Fuel Oil #4 Prod. | Ethylene dibromide | secondary | 2.69e-12 | 1.36e-13 |
| Natural Gas Prod. | Copper (+1 & +2) | secondary | 2.65e-12 | 1.34e-13 |
| Fuel Oil #4 Prod. | 1,1,1-Trichloroethane | secondary | 2.53e-12 | 1.28e-13 |
| Natural Gas Prod. | Pyrene | secondary | 2.45e-12 | 1.24e-13 |
| Fuel Oil #6 Prod. | Mercury compounds | secondary | 2.39e-12 | 1.21e-13 |
| Fuel Oil #2 Prod. | Benzo[b,j,k]fluoranthene | secondary | 2.31e-12 | 1.17e-13 |
| Fuel Oil #2 Prod. | Benzo[a]pyrene | secondary | 2.11e-12 | 1.07e-13 |
| Fuel Oil #2 Prod. | Fluorene | secondary | 2.06e-12 | 1.04e-13 |
| Fuel Oil #2 Prod. | Mercury compounds | secondary | 1.98e-12 | 1.00e-13 |
| Fuel Oil #6 Prod. | Dibenzo[a,h]anthracene | secondary | 1.90e-12 | 9.65e-14 |
| Fuel Oil #4 Prod. | Ethyl Chloride | secondary | 1.79e-12 | 9.09e-14 |
| Fuel Oil #2 Prod. | Pyrene | secondary | 1.75e-12 | 8.87e-14 |
| Fuel Oil #6 Prod. | HALON-1301 | secondary | 1.72e-12 | 8.70e-14 |
| Fuel Oil #4 Prod. | 2-Methylnaphthalene | secondary | 1.69e-12 | 8.55e-14 |
| Fuel Oil #2 Prod. | Fluoranthene | secondary | 1.67e-12 | 8.48e-14 |
| Fuel Oil #2 Prod. | Benzo[g,h,i]perylene | secondary | 1.67e-12 | 8.44e-14 |
| Natural Gas Prod. | Fluorene | secondary | 1.64e-12 | 8.30e-14 |
| Fuel Oil #4 Prod. | Cumene | secondary | 1.52e-12 | 7.69e-14 |
| Fuel Oil #2 Prod. | Benzo[b]fluoranthene | secondary | 1.47e-12 | 7.47e-14 |
| Fuel Oil #4 Prod. | Chlorine | secondary | 1.47e-12 | 7.44e-14 |
| Natural Gas Prod. | Fluoranthene | secondary | 1.46e-12 | 7.42e-14 |
| Fuel Oil #2 Prod. | HALON-1301 | secondary | 1.42e-12 | 7.22e-14 |
| Natural Gas Prod. | Benzo[b,j,k]fluoranthene | secondary | 1.28e-12 | 6.47e-14 |
| Fuel Oil #6 Prod. | 5-Methyl chrysene | secondary | 1.19e-12 | 6.02e-14 |
| Fuel Oil #2 Prod. | Dibenzo[a,h]anthracene | secondary | 1.05e-12 | 5.30e-14 |
| Fuel Oil #4 Prod. | Acetophenone | secondary | 9.45e-13 | 4.78e-14 |

## Table M-39. CRT LCIA Results for the Terrestrial Toxicity Impact Category

| Process Group | Material | LCI Data Type | Terrestrial Toxicity (tox-kg) | % of Total |
|---|---|---|---|---|
| Fuel Oil #4 Prod. | Biphenyl | secondary | 9.06e-13 | 4.59e-14 |
| Fuel Oil #4 Prod. | Acenaphthylene | secondary | 6.90e-13 | 3.50e-14 |
| Fuel Oil #4 Prod. | Acenaphthene | secondary | 5.39e-13 | 2.73e-14 |
| Fuel Oil #2 Prod. | 5-Methyl chrysene | secondary | 4.62e-13 | 2.34e-14 |
| Fuel Oil #6 Prod. | Halogenated matter (organic) | secondary | 3.95e-13 | 2.00e-14 |
| Fuel Oil #4 Prod. | Chrysene | secondary | 3.68e-13 | 1.87e-14 |
| Fuel Oil #4 Prod. | Benzo[a]anthracene | secondary | 3.66e-13 | 1.85e-14 |
| Fuel Oil #2 Prod. | Halogenated matter (organic) | secondary | 3.27e-13 | 1.66e-14 |
| Fuel Oil #4 Prod. | Nickel cmpds | secondary | 3.17e-13 | 1.60e-14 |
| LPG Production | Halogenated hydrocarbons (unspecified) | secondary | 2.92e-13 | 1.48e-14 |
| Fuel Oil #4 Prod. | Indeno(1,2,3-cd)pyrene | secondary | 2.79e-13 | 1.41e-14 |
| Fuel Oil #4 Prod. | Lead cmpds | secondary | 2.66e-13 | 1.35e-14 |
| Natural Gas Prod. | 5-Methyl chrysene | secondary | 2.55e-13 | 1.29e-14 |
| Fuel Oil #4 Prod. | Benzo[b,j,k]fluoranthene | secondary | 2.46e-13 | 1.25e-14 |
| Fuel Oil #4 Prod. | Benzo[a]pyrene | secondary | 2.19e-13 | 1.11e-14 |
| Fuel Oil #4 Prod. | Fluorene | secondary | 2.16e-13 | 1.09e-14 |
| Fuel Oil #6 Prod. | Anthracene | secondary | 1.79e-13 | 9.07e-15 |
| Fuel Oil #4 Prod. | Pyrene | secondary | 1.78e-13 | 9.02e-15 |
| Fuel Oil #4 Prod. | Fluoranthene | secondary | 1.75e-13 | 8.86e-15 |
| Fuel Oil #4 Prod. | Benzo[g,h,i]perylene | secondary | 1.62e-13 | 8.20e-15 |
| Fuel Oil #4 Prod. | Mercury compounds | secondary | 1.61e-13 | 8.16e-15 |
| Fuel Oil #4 Prod. | Benzo[b]fluoranthene | secondary | 1.38e-13 | 6.98e-15 |
| Fuel Oil #4 Prod. | HALON-1301 | secondary | 1.16e-13 | 5.86e-15 |
| Fuel Oil #4 Prod. | Dibenzo[a,h]anthracene | secondary | 9.69e-14 | 4.91e-15 |
| Natural Gas Prod. | Anthracene | secondary | 9.56e-14 | 4.84e-15 |
| Fuel Oil #2 Prod. | Anthracene | secondary | 7.64e-14 | 3.87e-15 |
| US electric grid | 2,3,7,8-TCDF | model/secondary | 7.30e-14 | 3.70e-15 |
| Japanese Electric Grid | 2,3,7,8-TCDF | model/secondary | 5.84e-14 | 2.96e-15 |
| Fuel Oil #4 Prod. | 5-Methyl chrysene | secondary | 4.92e-14 | 2.49e-15 |
| Natural Gas Prod. | Nickel cmpds | secondary | 2.81e-14 | 1.42e-15 |
| Fuel Oil #4 Prod. | Halogenated matter (organic) | secondary | 2.66e-14 | 1.35e-15 |
| Natural Gas Prod. | Lead cmpds | secondary | 2.36e-14 | 1.19e-15 |
| Natural Gas Prod. | Mercury compounds | secondary | 1.43e-14 | 7.24e-16 |
| Natural Gas Prod. | HALON-1301 | secondary | 1.03e-14 | 5.20e-16 |
| Fuel Oil #4 Prod. | Anthracene | secondary | 7.82e-15 | 3.96e-16 |
| Natural Gas Prod. | Halogenated matter (organic) | secondary | 2.36e-15 | 1.19e-16 |
| Fuel Oil #6 Prod. | Halogenated hydrocarbons (unspecified) | secondary | 9.87e-16 | 5.00e-17 |
| Fuel Oil #2 Prod. | Halogenated hydrocarbons (unspecified) | secondary | 8.19e-16 | 4.15e-17 |
| Fuel Oil #4 Prod. | Halogenated hydrocarbons (unspecified) | secondary | 6.65e-17 | 3.37e-18 |
| Natural Gas Prod. | Halogenated hydrocarbons (unspecified) | secondary | 5.89e-18 | 2.98e-19 |
| **Total Manufacturing** | | | **9.46e+01** | **4.79e+00** |
| **Use, Maintenance and Repair Life-cycle Stage** | | | | |
| US electric grid | Sulfur dioxide | model/secondary | 1.65e+03 | 8.34e+01 |
| US electric grid | Nitrogen oxides | model/secondary | 1.18e+00 | 5.96e-02 |
| US electric grid | Carbon monoxide | model/secondary | 1.01e+00 | 5.12e-02 |
| US electric grid | Methane | model/secondary | 6.45e-01 | 3.27e-02 |
| US electric grid | Arsenic | model/secondary | 5.58e-01 | 2.83e-02 |
| US electric grid | Hydrochloric acid | model/secondary | 4.93e-01 | 2.50e-02 |
| US electric grid | Selenium | model/secondary | 9.28e-02 | 4.70e-03 |
| US electric grid | Vanadium | model/secondary | 6.98e-02 | 3.54e-03 |

## Table M-39. CRT LCIA Results for the Terrestrial Toxicity Impact Category

| Process Group | Material | LCI Data Type | Terrestrial Toxicity (tox-kg) | % of Total |
|---|---|---|---|---|
| US electric grid | PM-10 | model/secondary | 5.78e-02 | 2.93e-03 |
| US electric grid | Hydrofluoric acid | model/secondary | 1.35e-02 | 6.81e-04 |
| US electric grid | Formaldehyde | model/secondary | 9.69e-03 | 4.91e-04 |
| US electric grid | Benzene | model/secondary | 6.97e-03 | 3.53e-04 |
| US electric grid | Phosphorus (yellow or white) | model/secondary | 3.93e-03 | 1.99e-04 |
| US electric grid | Nitrous oxide | model/secondary | 3.40e-03 | 1.72e-04 |
| US electric grid | Zinc (elemental) | model/secondary | 1.81e-03 | 9.18e-05 |
| US electric grid | Antimony | model/secondary | 1.48e-03 | 7.51e-05 |
| US electric grid | Molybdenum | model/secondary | 4.96e-04 | 2.51e-05 |
| US electric grid | 2-Chloroacetophenone | model/secondary | 4.31e-04 | 2.18e-05 |
| US electric grid | Bromomethane | model/secondary | 4.27e-04 | 2.16e-05 |
| US electric grid | Cyanide (-1) | model/secondary | 2.24e-04 | 1.14e-05 |
| US electric grid | 2,3,7,8-TCDD | model/secondary | 1.70e-04 | 8.59e-06 |
| US electric grid | Nickel | model/secondary | 1.63e-04 | 8.26e-06 |
| US electric grid | Naphthalene | model/secondary | 1.35e-04 | 6.84e-06 |
| US electric grid | Barium | model/secondary | 1.16e-04 | 5.90e-06 |
| US electric grid | Carbon disulfide | model/secondary | 8.01e-05 | 4.06e-06 |
| US electric grid | Benzyl chloride | model/secondary | 6.28e-05 | 3.18e-06 |
| US electric grid | Chloroform | model/secondary | 4.88e-05 | 2.47e-06 |
| US electric grid | Manganese | model/secondary | 4.56e-05 | 2.31e-06 |
| US electric grid | Chromium (VI) | model/secondary | 3.43e-05 | 1.74e-06 |
| US electric grid | Acrolein | model/secondary | 2.60e-05 | 1.32e-06 |
| US electric grid | Copper | model/secondary | 2.24e-05 | 1.13e-06 |
| US electric grid | Methyl chloride | model/secondary | 2.11e-05 | 1.07e-06 |
| US electric grid | Fluoride | model/secondary | 1.95e-05 | 9.89e-07 |
| US electric grid | Methyl hydrazine | model/secondary | 1.52e-05 | 7.72e-07 |
| US electric grid | Lead | model/secondary | 1.27e-05 | 6.46e-07 |
| US electric grid | Cobalt | model/secondary | 1.22e-05 | 6.16e-07 |
| US electric grid | Propionaldehyde | model/secondary | 1.17e-05 | 5.93e-07 |
| US electric grid | Acetaldehyde | model/secondary | 1.17e-05 | 5.93e-07 |
| US electric grid | Di(2-ethylhexyl)phthalate | model/secondary | 8.99e-06 | 4.56e-07 |
| US electric grid | Mercury | model/secondary | 7.51e-06 | 3.81e-07 |
| US electric grid | Hexane | model/secondary | 6.01e-06 | 3.04e-07 |
| US electric grid | Cadmium | model/secondary | 4.82e-06 | 2.44e-07 |
| US electric grid | Dimethyl sulfate | model/secondary | 4.30e-06 | 2.18e-07 |
| US electric grid | Toluene | model/secondary | 4.25e-06 | 2.15e-07 |
| US electric grid | Isophorone | model/secondary | 4.13e-06 | 2.09e-07 |
| US electric grid | Methyl ethyl ketone | model/secondary | 3.33e-06 | 1.69e-07 |
| US electric grid | Tetrachloroethylene | model/secondary | 3.28e-06 | 1.66e-07 |
| US electric grid | Methyl methacrylate | model/secondary | 2.85e-06 | 1.44e-07 |
| US electric grid | 1,2-Dichloroethane | model/secondary | 2.37e-06 | 1.20e-07 |
| US electric grid | Bromoform | model/secondary | 2.33e-06 | 1.18e-07 |
| US electric grid | Dichloromethane | model/secondary | 2.24e-06 | 1.14e-07 |
| US electric grid | Beryllium | model/secondary | 1.91e-06 | 9.67e-08 |
| US electric grid | Chlorobenzene | model/secondary | 1.88e-06 | 9.52e-08 |
| US electric grid | 2,4-Dinitrotoluene | model/secondary | 1.49e-06 | 7.57e-08 |
| US electric grid | Ethylbenzene | model/secondary | 7.41e-07 | 3.75e-08 |
| US electric grid | Methyl tert-butyl ether | model/secondary | 3.74e-07 | 1.89e-08 |
| US electric grid | Phenol | model/secondary | 2.85e-07 | 1.44e-08 |
| US electric grid | Styrene | model/secondary | 2.73e-07 | 1.38e-08 |

## Table M-39. CRT LCIA Results for the Terrestrial Toxicity Impact Category

| Process Group | Material | LCI Data Type | Terrestrial Toxicity (tox-kg) | % of Total |
|---|---|---|---|---|
| US electric grid | Vinyl acetate | model/secondary | 2.66e-07 | 1.35e-08 |
| US electric grid | Phenanthrene | model/secondary | 2.51e-07 | 1.27e-08 |
| US electric grid | Xylene (mixed isomers) | model/secondary | 2.21e-07 | 1.12e-08 |
| US electric grid | Chromium (III) | model/secondary | 1.97e-07 | 9.98e-09 |
| US electric grid | 1,1,1-Trichloroethane | model/secondary | 1.08e-07 | 5.49e-09 |
| US electric grid | Ethylene dibromide | model/secondary | 1.08e-07 | 5.45e-09 |
| US electric grid | Ethyl Chloride | model/secondary | 7.19e-08 | 3.64e-09 |
| US electric grid | Cumene | model/secondary | 6.08e-08 | 3.08e-09 |
| US electric grid | Acetophenone | model/secondary | 3.78e-08 | 1.92e-09 |
| US electric grid | Biphenyl | model/secondary | 3.63e-08 | 1.84e-09 |
| US electric grid | Acenaphthylene | model/secondary | 2.26e-08 | 1.14e-09 |
| US electric grid | Acenaphthene | model/secondary | 1.93e-08 | 9.78e-10 |
| US electric grid | Benzo[b,j,k]fluoranthene | model/secondary | 1.06e-08 | 5.39e-10 |
| US electric grid | Chrysene | model/secondary | 1.02e-08 | 5.17e-10 |
| US electric grid | Benzo[a]anthracene | model/secondary | 9.27e-09 | 4.70e-10 |
| US electric grid | Fluorene | model/secondary | 7.99e-09 | 4.05e-10 |
| US electric grid | Indeno(1,2,3-cd)pyrene | model/secondary | 6.59e-09 | 3.34e-10 |
| US electric grid | Fluoranthene | model/secondary | 6.39e-09 | 3.24e-10 |
| US electric grid | Pyrene | model/secondary | 5.28e-09 | 2.68e-10 |
| US electric grid | o-xylene | model/secondary | 3.79e-09 | 1.92e-10 |
| US electric grid | Benzo[g,h,i]perylene | model/secondary | 3.60e-09 | 1.83e-10 |
| US electric grid | Benzo[a]pyrene | model/secondary | 3.41e-09 | 1.73e-10 |
| US electric grid | 2-Methylnaphthalene | model/secondary | 2.67e-09 | 1.35e-10 |
| US electric grid | 5-Methyl chrysene | model/secondary | 1.97e-09 | 1.00e-10 |
| US electric grid | Dibenzo[a,h]anthracene | model/secondary | 8.74e-10 | 4.43e-11 |
| US electric grid | Anthracene | model/secondary | 2.32e-10 | 1.17e-11 |
| US electric grid | 2,3,7,8-TCDF | model/secondary | 4.57e-12 | 2.32e-13 |
| **Total Use, Maintenance and Repiar** | | | **1.65e+03** | **8.36e+01** |
| **End-of-life Life-cycle Stage** | | | | |
| CRT Incineration | Sulfur dioxide | secondary | 1.98e-01 | 1.00e-02 |
| CRT landfilling | Sulfur dioxide | primary | 1.85e-01 | 9.37e-03 |
| US electric grid | Sulfur dioxide | model/secondary | 1.65e-01 | 8.35e-03 |
| CRT landfilling | Carbon monoxide | primary | 9.22e-03 | 4.67e-04 |
| CRT landfilling | Nitrogen dioxide | primary | 1.85e-03 | 9.38e-05 |
| CRT landfilling | PM | primary | 2.08e-04 | 1.06e-05 |
| US electric grid | Nitrogen oxides | model/secondary | 1.18e-04 | 5.97e-06 |
| CRT landfilling | Arsenic cmpds | primary | 1.02e-04 | 5.18e-06 |
| US electric grid | Carbon monoxide | model/secondary | 1.01e-04 | 5.12e-06 |
| CRT Incineration | Arsenic cmpds | secondary | 9.83e-05 | 4.98e-06 |
| US electric grid | Methane | model/secondary | 6.45e-05 | 3.27e-06 |
| US electric grid | Arsenic | model/secondary | 5.58e-05 | 2.83e-06 |
| CRT landfilling | Methane | primary | 5.44e-05 | 2.76e-06 |
| US electric grid | Hydrochloric acid | model/secondary | 4.93e-05 | 2.50e-06 |
| LPG Production | Carbon monoxide | secondary | 4.61e-05 | 2.34e-06 |
| CRT landfilling | Benzene | primary | 4.04e-05 | 2.05e-06 |
| CRT Incineration | Lead | secondary | 1.43e-05 | 7.24e-07 |
| CRT Incineration | Barium cmpds | secondary | 1.27e-05 | 6.45e-07 |
| CRT Incineration | Silver compounds | secondary | 1.12e-05 | 5.68e-07 |
| CRT landfilling | Silver compounds | primary | 1.05e-05 | 5.30e-07 |
| CRT landfilling | Barium cmpds | primary | 1.01e-05 | 5.13e-07 |

## Table M-39. CRT LCIA Results for the Terrestrial Toxicity Impact Category

| Process Group | Material | LCI Data Type | Terrestrial Toxicity (tox-kg) | % of Total |
|---|---|---|---|---|
| US electric grid | Selenium | model/secondary | 9.28e-06 | 4.70e-07 |
| LPG Production | Vanadium | secondary | 9.04e-06 | 4.58e-07 |
| LPG Production | Benzene | secondary | 7.40e-06 | 3.75e-07 |
| LPG Production | Methane | secondary | 7.24e-06 | 3.67e-07 |
| US electric grid | Vanadium | model/secondary | 6.98e-06 | 3.54e-07 |
| LPG Production | Sulfur oxides | secondary | 6.92e-06 | 3.50e-07 |
| US electric grid | PM-10 | model/secondary | 5.78e-06 | 2.93e-07 |
| LPG Production | Nitrogen oxides | secondary | 4.94e-06 | 2.51e-07 |
| CRT landfilling | Hydrochloric acid | primary | 4.69e-06 | 2.37e-07 |
| CRT landfilling | Ammonia | primary | 2.41e-06 | 1.22e-07 |
| LPG Production | Arsenic | secondary | 1.78e-06 | 9.03e-08 |
| US electric grid | Hydrofluoric acid | model/secondary | 1.35e-06 | 6.82e-08 |
| LPG Production | Formaldehyde | secondary | 1.16e-06 | 5.86e-08 |
| LPG Production | PM | secondary | 1.11e-06 | 5.64e-08 |
| CRT landfilling | Cadmium cmpds | primary | 9.72e-07 | 4.92e-08 |
| US electric grid | Formaldehyde | model/secondary | 9.70e-07 | 4.91e-08 |
| CRT Incineration | Cadmium cmpds | secondary | 9.41e-07 | 4.77e-08 |
| US electric grid | Benzene | model/secondary | 6.98e-07 | 3.53e-08 |
| US electric grid | Phosphorus (yellow or white) | model/secondary | 3.93e-07 | 1.99e-08 |
| US electric grid | Nitrous oxide | model/secondary | 3.40e-07 | 1.72e-08 |
| LPG Production | Hydrochloric acid | secondary | 3.18e-07 | 1.61e-08 |
| CRT landfilling | Hydrogen sulfide | primary | 2.30e-07 | 1.17e-08 |
| US electric grid | Zinc (elemental) | model/secondary | 1.81e-07 | 9.19e-09 |
| US electric grid | Antimony | model/secondary | 1.48e-07 | 7.52e-09 |
| LPG Production | Nitrous oxide | secondary | 1.40e-07 | 7.09e-09 |
| LPG Production | Phosphorus (yellow or white) | secondary | 8.47e-08 | 4.29e-09 |
| LPG Production | Fluorides (F-) | secondary | 6.48e-08 | 3.28e-09 |
| LPG Production | Selenium | secondary | 6.40e-08 | 3.24e-09 |
| US electric grid | Molybdenum | model/secondary | 4.97e-08 | 2.52e-09 |
| US electric grid | 2-Chloroacetophenone | model/secondary | 4.32e-08 | 2.19e-09 |
| US electric grid | Bromomethane | model/secondary | 4.27e-08 | 2.16e-09 |
| LPG Production | Ammonia | secondary | 3.23e-08 | 1.63e-09 |
| CRT landfilling | Selenium | primary | 3.21e-08 | 1.62e-09 |
| CRT landfilling | Chromium (VI) | primary | 2.84e-08 | 1.44e-09 |
| LPG Production | Hydrogen sulfide | secondary | 2.65e-08 | 1.34e-09 |
| US electric grid | Cyanide (-1) | model/secondary | 2.24e-08 | 1.14e-09 |
| CRT Incineration | Carbon tetrachloride | secondary | 1.80e-08 | 9.11e-10 |
| US electric grid | 2,3,7,8-TCDD | model/secondary | 1.70e-08 | 8.59e-10 |
| CRT landfilling | Carbon tetrachloride | primary | 1.68e-08 | 8.50e-10 |
| US electric grid | Nickel | model/secondary | 1.63e-08 | 8.26e-10 |
| LPG Production | Molybdenum | secondary | 1.42e-08 | 7.20e-10 |
| US electric grid | Naphthalene | model/secondary | 1.35e-08 | 6.85e-10 |
| CRT landfilling | Chloroform | primary | 1.30e-08 | 6.59e-10 |
| US electric grid | Barium | model/secondary | 1.17e-08 | 5.90e-10 |
| CRT landfilling | Mercury compounds | primary | 1.15e-08 | 5.84e-10 |
| CRT Incineration | Mercury compounds | secondary | 1.13e-08 | 5.72e-10 |
| LPG Production | Zinc (elemental) | secondary | 1.04e-08 | 5.24e-10 |
| LPG Production | Hydrofluoric acid | secondary | 8.66e-09 | 4.39e-10 |
| CRT landfilling | Toluene | primary | 8.22e-09 | 4.17e-10 |
| US electric grid | Carbon disulfide | model/secondary | 8.01e-09 | 4.06e-10 |

## Table M-39. CRT LCIA Results for the Terrestrial Toxicity Impact Category

| Process Group | Material | LCI Data Type | Terrestrial Toxicity (tox-kg) | % of Total |
|---|---|---|---|---|
| LPG Production | Ethane | secondary | 6.70e-09 | 3.39e-10 |
| US electric grid | Benzyl chloride | model/secondary | 6.28e-09 | 3.18e-10 |
| LPG Production | Phenol | secondary | 6.17e-09 | 3.13e-10 |
| LPG Production | Pentane | secondary | 5.62e-09 | 2.84e-10 |
| US electric grid | Chloroform | model/secondary | 4.88e-09 | 2.47e-10 |
| US electric grid | Manganese | model/secondary | 4.56e-09 | 2.31e-10 |
| LPG Production | Hexane | secondary | 3.89e-09 | 1.97e-10 |
| US electric grid | Chromium (VI) | model/secondary | 3.44e-09 | 1.74e-10 |
| US electric grid | Acrolein | model/secondary | 2.60e-09 | 1.32e-10 |
| LPG Production | Nickel | secondary | 2.51e-09 | 1.27e-10 |
| US electric grid | Copper | model/secondary | 2.24e-09 | 1.13e-10 |
| US electric grid | Methyl chloride | model/secondary | 2.11e-09 | 1.07e-10 |
| US electric grid | Fluoride | model/secondary | 1.95e-09 | 9.90e-11 |
| LPG Production | PM-10 | secondary | 1.94e-09 | 9.84e-11 |
| LPG Production | Antimony | secondary | 1.85e-09 | 9.35e-11 |
| CRT landfilling | Xylene (mixed isomers) | primary | 1.69e-09 | 8.59e-11 |
| US electric grid | Methyl hydrazine | model/secondary | 1.53e-09 | 7.73e-11 |
| US electric grid | Lead | model/secondary | 1.28e-09 | 6.46e-11 |
| LPG Production | Aluminum (+3) | secondary | 1.22e-09 | 6.19e-11 |
| US electric grid | Cobalt | model/secondary | 1.22e-09 | 6.16e-11 |
| CRT landfilling | Tetrachloroethylene | primary | 1.20e-09 | 6.07e-11 |
| US electric grid | Propionaldehyde | model/secondary | 1.17e-09 | 5.93e-11 |
| US electric grid | Acetaldehyde | model/secondary | 1.17e-09 | 5.93e-11 |
| CRT landfilling | 1,2-Dichloroethane | primary | 9.32e-10 | 4.72e-11 |
| US electric grid | Di(2-ethylhexyl)phthalate | model/secondary | 9.00e-10 | 4.56e-11 |
| LPG Production | Chromium (VI) | secondary | 8.70e-10 | 4.41e-11 |
| CRT Incineration | Lead cmpds | secondary | 8.10e-10 | 4.11e-11 |
| CRT landfilling | Lead cmpds | primary | 7.89e-10 | 4.00e-11 |
| US electric grid | Mercury | model/secondary | 7.52e-10 | 3.81e-11 |
| CRT Incineration | Trichloroethylene | secondary | 7.50e-10 | 3.80e-11 |
| CRT landfilling | Trichloroethylene | primary | 6.99e-10 | 3.54e-11 |
| US electric grid | Hexane | model/secondary | 6.01e-10 | 3.05e-11 |
| LPG Production | Nitrate | secondary | 5.23e-10 | 2.65e-11 |
| US electric grid | Cadmium | model/secondary | 4.82e-10 | 2.44e-11 |
| CRT landfilling | Ethylbenzene | primary | 4.44e-10 | 2.25e-11 |
| US electric grid | Dimethyl sulfate | model/secondary | 4.31e-10 | 2.18e-11 |
| US electric grid | Toluene | model/secondary | 4.25e-10 | 2.15e-11 |
| US electric grid | Isophorone | model/secondary | 4.13e-10 | 2.09e-11 |
| US electric grid | Methyl ethyl ketone | model/secondary | 3.33e-10 | 1.69e-11 |
| US electric grid | Tetrachloroethylene | model/secondary | 3.28e-10 | 1.66e-11 |
| LPG Production | Copper | secondary | 3.01e-10 | 1.52e-11 |
| US electric grid | Methyl methacrylate | model/secondary | 2.85e-10 | 1.44e-11 |
| LPG Production | 2-Chloroacetophenone | secondary | 2.78e-10 | 1.41e-11 |
| LPG Production | Dimethylbenzanthracene | secondary | 2.75e-10 | 1.40e-11 |
| LPG Production | Bromomethane | secondary | 2.75e-10 | 1.39e-11 |
| US electric grid | 1,2-Dichloroethane | model/secondary | 2.37e-10 | 1.20e-11 |
| US electric grid | Bromoform | model/secondary | 2.33e-10 | 1.18e-11 |
| US electric grid | Dichloromethane | model/secondary | 2.25e-10 | 1.14e-11 |
| LPG Production | Naphthalene | secondary | 2.23e-10 | 1.13e-11 |
| CRT landfilling | Dichloromethane | primary | 1.94e-10 | 9.85e-12 |
| LPG Production | Manganese | secondary | 1.93e-10 | 9.76e-12 |

## Table M-39. CRT LCIA Results for the Terrestrial Toxicity Impact Category

| Process Group | Material | LCI Data Type | Terrestrial Toxicity (tox-kg) | % of Total |
|---|---|---|---|---|
| US electric grid | Beryllium | model/secondary | 1.91e-10 | 9.67e-12 |
| US electric grid | Chlorobenzene | model/secondary | 1.88e-10 | 9.52e-12 |
| LPG Production | Barium | secondary | 1.61e-10 | 8.15e-12 |
| US electric grid | 2,4-Dinitrotoluene | model/secondary | 1.49e-10 | 7.57e-12 |
| LPG Production | Silicon | secondary | 1.46e-10 | 7.40e-12 |
| LPG Production | Cyanide (-1) | secondary | 1.44e-10 | 7.31e-12 |
| LPG Production | Barium cmpds | secondary | 1.37e-10 | 6.94e-12 |
| LPG Production | Lead | secondary | 1.07e-10 | 5.40e-12 |
| US electric grid | Ethylbenzene | model/secondary | 7.41e-11 | 3.75e-12 |
| CRT Incineration | o-xylene | secondary | 5.21e-11 | 2.64e-12 |
| LPG Production | Carbon disulfide | secondary | 5.16e-11 | 2.61e-12 |
| CRT landfilling | Chromium (III) | primary | 4.83e-11 | 2.45e-12 |
| LPG Production | Benzyl chloride | secondary | 4.04e-11 | 2.05e-12 |
| US electric grid | Methyl tert-butyl ether | model/secondary | 3.74e-11 | 1.89e-12 |
| LPG Production | Aluminum (elemental) | secondary | 3.34e-11 | 1.69e-12 |
| LPG Production | Chloroform | secondary | 3.14e-11 | 1.59e-12 |
| US electric grid | Phenol | model/secondary | 2.85e-11 | 1.44e-12 |
| US electric grid | Styrene | model/secondary | 2.73e-11 | 1.38e-12 |
| US electric grid | Vinyl acetate | model/secondary | 2.66e-11 | 1.35e-12 |
| US electric grid | Phenanthrene | model/secondary | 2.51e-11 | 1.27e-12 |
| US electric grid | Xylene (mixed isomers) | model/secondary | 2.21e-11 | 1.12e-12 |
| LPG Production | Cobalt | secondary | 2.17e-11 | 1.10e-12 |
| US electric grid | Chromium (III) | model/secondary | 1.97e-11 | 9.99e-13 |
| LPG Production | Acrolein | secondary | 1.67e-11 | 8.48e-13 |
| LPG Production | Methyl chloride | secondary | 1.36e-11 | 6.87e-13 |
| LPG Production | Beryllium | secondary | 1.21e-11 | 6.14e-13 |
| US electric grid | 1,1,1-Trichloroethane | model/secondary | 1.08e-11 | 5.50e-13 |
| US electric grid | Ethylene dibromide | model/secondary | 1.08e-11 | 5.45e-13 |
| LPG Production | Methyl hydrazine | secondary | 9.82e-12 | 4.97e-13 |
| LPG Production | Acetaldehyde | secondary | 7.54e-12 | 3.82e-13 |
| LPG Production | Propionaldehyde | secondary | 7.54e-12 | 3.82e-13 |
| LPG Production | Mercury | secondary | 7.50e-12 | 3.80e-13 |
| US electric grid | Ethyl Chloride | model/secondary | 7.19e-12 | 3.64e-13 |
| LPG Production | Cadmium | secondary | 6.99e-12 | 3.54e-13 |
| US electric grid | Cumene | model/secondary | 6.08e-12 | 3.08e-13 |
| LPG Production | Cadmium cmpds | secondary | 5.99e-12 | 3.04e-13 |
| LPG Production | Di(2-ethylhexyl)phthalate | secondary | 5.79e-12 | 2.93e-13 |
| LPG Production | Toluene | secondary | 5.38e-12 | 2.72e-13 |
| US electric grid | Acetophenone | model/secondary | 3.79e-12 | 1.92e-13 |
| US electric grid | Biphenyl | model/secondary | 3.63e-12 | 1.84e-13 |
| LPG Production | 1,4-Dichlorobenzene | secondary | 3.08e-12 | 1.56e-13 |
| CRT Incineration | Vinyl chloride | secondary | 2.97e-12 | 1.51e-13 |
| CRT landfilling | Vinyl chloride | primary | 2.77e-12 | 1.41e-13 |
| LPG Production | Dimethyl sulfate | secondary | 2.77e-12 | 1.40e-13 |
| LPG Production | Isophorone | secondary | 2.66e-12 | 1.35e-13 |
| US electric grid | Acenaphthylene | model/secondary | 2.26e-12 | 1.14e-13 |
| LPG Production | Methyl ethyl ketone | secondary | 2.14e-12 | 1.09e-13 |
| LPG Production | Tetrachloroethylene | secondary | 2.11e-12 | 1.07e-13 |
| US electric grid | Acenaphthene | model/secondary | 1.93e-12 | 9.79e-14 |
| LPG Production | Methyl methacrylate | secondary | 1.83e-12 | 9.28e-14 |

## Table M-39. CRT LCIA Results for the Terrestrial Toxicity Impact Category

| Process Group | Material | LCI Data Type | Terrestrial Toxicity (tox-kg) | % of Total |
|---|---|---|---|---|
| LPG Production | 1,2-Dichloroethane | secondary | 1.53e-12 | 7.74e-14 |
| LPG Production | Bromoform | secondary | 1.50e-12 | 7.59e-14 |
| LPG Production | Chromium (III) | secondary | 1.48e-12 | 7.51e-14 |
| LPG Production | Dichloromethane | secondary | 1.45e-12 | 7.32e-14 |
| LPG Production | Chlorobenzene | secondary | 1.21e-12 | 6.13e-14 |
| LPG Production | Aromatic hydrocarbons | secondary | 1.21e-12 | 6.12e-14 |
| LPG Production | Copper (+1 & +2) | secondary | 1.13e-12 | 5.73e-14 |
| US electric grid | Benzo[b,j,k]fluoranthene | model/secondary | 1.06e-12 | 5.39e-14 |
| US electric grid | Chrysene | model/secondary | 1.02e-12 | 5.18e-14 |
| LPG Production | 2,4-Dinitrotoluene | secondary | 9.62e-13 | 4.87e-14 |
| US electric grid | Benzo[a]anthracene | model/secondary | 9.28e-13 | 4.70e-14 |
| US electric grid | Fluorene | model/secondary | 8.00e-13 | 4.05e-14 |
| US electric grid | Indeno(1,2,3-cd)pyrene | model/secondary | 6.59e-13 | 3.34e-14 |
| US electric grid | Fluoranthene | model/secondary | 6.39e-13 | 3.24e-14 |
| LPG Production | o-xylene | secondary | 5.92e-13 | 3.00e-14 |
| US electric grid | Pyrene | model/secondary | 5.29e-13 | 2.68e-14 |
| LPG Production | Ethylbenzene | secondary | 4.80e-13 | 2.43e-14 |
| US electric grid | o-xylene | model/secondary | 3.80e-13 | 1.92e-14 |
| US electric grid | Benzo[g,h,i]perylene | model/secondary | 3.61e-13 | 1.83e-14 |
| US electric grid | Benzo[a]pyrene | model/secondary | 3.41e-13 | 1.73e-14 |
| US electric grid | 2-Methylnaphthalene | model/secondary | 2.67e-13 | 1.35e-14 |
| LPG Production | Methyl tert-butyl ether | secondary | 2.41e-13 | 1.22e-14 |
| US electric grid | 5-Methyl chrysene | model/secondary | 1.97e-13 | 1.00e-14 |
| LPG Production | Phenanthrene | secondary | 1.96e-13 | 9.91e-15 |
| LPG Production | Styrene | secondary | 1.76e-13 | 8.89e-15 |
| LPG Production | Vinyl acetate | secondary | 1.71e-13 | 8.68e-15 |
| LPG Production | 3-Methylcholanthrene | secondary | 1.62e-13 | 8.19e-15 |
| LPG Production | Zinc (+2) | secondary | 1.01e-13 | 5.13e-15 |
| US electric grid | Dibenzo[a,h]anthracene | model/secondary | 8.75e-14 | 4.43e-15 |
| LPG Production | Ethylene dibromide | secondary | 6.93e-14 | 3.51e-15 |
| LPG Production | 1,1,1-Trichloroethane | secondary | 6.53e-14 | 3.31e-15 |
| LPG Production | 2-Methylnaphthalene | secondary | 5.18e-14 | 2.63e-15 |
| LPG Production | Ethyl Chloride | secondary | 4.63e-14 | 2.35e-15 |
| LPG Production | Chlorine | secondary | 4.59e-14 | 2.33e-15 |
| LPG Production | Cumene | secondary | 3.92e-14 | 1.98e-15 |
| LPG Production | Acetophenone | secondary | 2.44e-14 | 1.23e-15 |
| LPG Production | Biphenyl | secondary | 2.34e-14 | 1.18e-15 |
| US electric grid | Anthracene | model/secondary | 2.32e-14 | 1.17e-15 |
| LPG Production | Acenaphthylene | secondary | 1.85e-14 | 9.36e-16 |
| LPG Production | Acenaphthene | secondary | 1.54e-14 | 7.80e-16 |
| LPG Production | Nickel cmpds | secondary | 1.20e-14 | 6.07e-16 |
| LPG Production | Benzo[a]anthracene | secondary | 1.08e-14 | 5.46e-16 |
| LPG Production | Chrysene | secondary | 1.03e-14 | 5.24e-16 |
| LPG Production | Lead cmpds | secondary | 1.01e-14 | 5.10e-16 |
| LPG Production | Indeno(1,2,3-cd)pyrene | secondary | 8.02e-15 | 4.06e-16 |
| LPG Production | Benzo[b,j,k]fluoranthene | secondary | 6.35e-15 | 3.22e-16 |
| LPG Production | Mercury compounds | secondary | 6.10e-15 | 3.09e-16 |
| LPG Production | Benzo[a]pyrene | secondary | 5.90e-15 | 2.99e-16 |
| LPG Production | Fluorene | secondary | 5.70e-15 | 2.89e-16 |
| LPG Production | Pyrene | secondary | 4.93e-15 | 2.50e-16 |

## Table M-39. CRT LCIA Results for the Terrestrial Toxicity Impact Category

| Process Group | Material | LCI Data Type | Terrestrial Toxicity (tox-kg) | % of Total |
|---|---|---|---|---|
| LPG Production | Benzo[g,h,i]perylene | secondary | 4.79e-15 | 2.43e-16 |
| LPG Production | Fluoranthene | secondary | 4.65e-15 | 2.36e-16 |
| LPG Production | HALON-1301 | secondary | 4.38e-15 | 2.22e-16 |
| LPG Production | Benzo[b]fluoranthene | secondary | 4.31e-15 | 2.18e-16 |
| LPG Production | Dibenzo[a,h]anthracene | secondary | 3.06e-15 | 1.55e-16 |
| LPG Production | 5-Methyl chrysene | secondary | 1.27e-15 | 6.44e-17 |
| LPG Production | Halogenated matter (organic) | secondary | 1.01e-15 | 5.10e-17 |
| US electric grid | 2,3,7,8-TCDF | model/secondary | 4.58e-16 | 2.32e-17 |
| LPG Production | Anthracene | secondary | 2.14e-16 | 1.09e-17 |
| LPG Production | Halogenated hydrocarbons (unspecified) | secondary | 2.52e-18 | 1.28e-19 |
| Natural Gas Prod. | Halogenated hydrocarbons (unspecified) | secondary | -2.95e-18 | -1.50e-19 |
| CRT Incineration | Halogenated hydrocarbons (unspecified) | secondary | -4.35e-17 | -2.20e-18 |
| Fuel Oil #4 Prod. | Halogenated hydrocarbons (unspecified) | secondary | -7.15e-16 | -3.62e-17 |
| Natural Gas Prod. | Halogenated matter (organic) | secondary | -1.18e-15 | -5.99e-17 |
| Natural Gas Prod. | HALON-1301 | secondary | -5.15e-15 | -2.61e-16 |
| Natural Gas Prod. | Mercury compounds | secondary | -7.16e-15 | -3.63e-16 |
| Natural Gas Prod. | Lead cmpds | secondary | -1.18e-14 | -5.99e-16 |
| Natural Gas Prod. | Nickel cmpds | secondary | -1.41e-14 | -7.13e-16 |
| CRT Incineration | Halogenated matter (organic) | secondary | -1.84e-14 | -9.30e-16 |
| Natural Gas Prod. | Anthracene | secondary | -4.79e-14 | -2.43e-15 |
| CRT Incineration | HALON-1301 | secondary | -7.99e-14 | -4.05e-15 |
| Fuel Oil #4 Prod. | Anthracene | secondary | -8.41e-14 | -4.26e-15 |
| Natural Gas Prod. | 5-Methyl chrysene | secondary | -1.28e-13 | -6.49e-15 |
| CRT Incineration | Nickel cmpds | secondary | -2.18e-13 | -1.11e-14 |
| Fuel Oil #4 Prod. | Halogenated matter (organic) | secondary | -2.86e-13 | -1.45e-14 |
| CRT Incineration | Dibenzo[a,h]anthracene | secondary | -4.49e-13 | -2.28e-14 |
| Fuel Oil #4 Prod. | 5-Methyl chrysene | secondary | -5.29e-13 | -2.68e-14 |
| Natural Gas Prod. | Benzo[b,j,k]fluoranthene | secondary | -6.40e-13 | -3.24e-14 |
| CRT Incineration | Benzo[b]fluoranthene | secondary | -6.65e-13 | -3.37e-14 |
| Natural Gas Prod. | Fluoranthene | secondary | -7.34e-13 | -3.72e-14 |
| Natural Gas Prod. | Fluorene | secondary | -8.22e-13 | -4.16e-14 |
| Fuel Oil #4 Prod. | Dibenzo[a,h]anthracene | secondary | -1.04e-12 | -5.28e-14 |
| Natural Gas Prod. | Pyrene | secondary | -1.23e-12 | -6.22e-14 |
| Fuel Oil #4 Prod. | HALON-1301 | secondary | -1.24e-12 | -6.30e-14 |
| Natural Gas Prod. | Copper (+1 & +2) | secondary | -1.33e-12 | -6.73e-14 |
| Natural Gas Prod. | Aromatic hydrocarbons | secondary | -1.42e-12 | -7.19e-14 |
| Natural Gas Prod. | Dibenzo[a,h]anthracene | secondary | -1.42e-12 | -7.20e-14 |
| Fuel Oil #4 Prod. | Benzo[b]fluoranthene | secondary | -1.48e-12 | -7.50e-14 |
| Natural Gas Prod. | Benzo[a]pyrene | secondary | -1.58e-12 | -8.00e-14 |
| Natural Gas Prod. | Benzo[g,h,i]perylene | secondary | -1.60e-12 | -8.11e-14 |
| Fuel Oil #4 Prod. | Mercury compounds | secondary | -1.73e-12 | -8.77e-14 |
| Fuel Oil #4 Prod. | Benzo[g,h,i]perylene | secondary | -1.74e-12 | -8.81e-14 |
| Fuel Oil #4 Prod. | Fluoranthene | secondary | -1.88e-12 | -9.52e-14 |
| Fuel Oil #4 Prod. | Pyrene | secondary | -1.91e-12 | -9.70e-14 |
| Natural Gas Prod. | Benzo[b]fluoranthene | secondary | -2.09e-12 | -1.06e-13 |
| Natural Gas Prod. | Acenaphthene | secondary | -2.26e-12 | -1.14e-13 |
| Fuel Oil #4 Prod. | Fluorene | secondary | -2.32e-12 | -1.18e-13 |
| Natural Gas Prod. | Biphenyl | secondary | -2.35e-12 | -1.19e-13 |
| Fuel Oil #4 Prod. | Benzo[a]pyrene | secondary | -2.36e-12 | -1.19e-13 |
| Natural Gas Prod. | Acetophenone | secondary | -2.46e-12 | -1.24e-13 |

## Table M-39. CRT LCIA Results for the Terrestrial Toxicity Impact Category

| Process Group | Material | LCI Data Type | Terrestrial Toxicity (tox-kg) | % of Total |
|---|---|---|---|---|
| Natural Gas Prod. | Indeno(1,2,3-cd)pyrene | secondary | -2.47e-12 | -1.25e-13 |
| Fuel Oil #4 Prod. | Benzo[b,j,k]fluoranthene | secondary | -2.65e-12 | -1.34e-13 |
| Natural Gas Prod. | Chrysene | secondary | -2.71e-12 | -1.37e-13 |
| Natural Gas Prod. | Benzo[a]anthracene | secondary | -2.81e-12 | -1.42e-13 |
| Fuel Oil #4 Prod. | Lead cmpds | secondary | -2.86e-12 | -1.45e-13 |
| Fuel Oil #4 Prod. | Indeno(1,2,3-cd)pyrene | secondary | -3.00e-12 | -1.52e-13 |
| Fuel Oil #4 Prod. | Nickel cmpds | secondary | -3.40e-12 | -1.72e-13 |
| Natural Gas Prod. | Acenaphthylene | secondary | -3.51e-12 | -1.78e-13 |
| CRT Incineration | Anthracene | secondary | -3.73e-12 | -1.89e-13 |
| Fuel Oil #4 Prod. | Benzo[a]anthracene | secondary | -3.93e-12 | -1.99e-13 |
| Natural Gas Prod. | Cumene | secondary | -3.95e-12 | -2.00e-13 |
| Fuel Oil #4 Prod. | Chrysene | secondary | -3.96e-12 | -2.01e-13 |
| Natural Gas Prod. | Ethyl Chloride | secondary | -4.66e-12 | -2.36e-13 |
| Fuel Oil #4 Prod. | Acenaphthene | secondary | -5.79e-12 | -2.93e-13 |
| Natural Gas Prod. | 1,1,1-Trichloroethane | secondary | -6.58e-12 | -3.33e-13 |
| Natural Gas Prod. | Ethylene dibromide | secondary | -6.98e-12 | -3.54e-13 |
| Natural Gas Prod. | Cadmium cmpds | secondary | -7.04e-12 | -3.57e-13 |
| Fuel Oil #4 Prod. | Acenaphthylene | secondary | -7.42e-12 | -3.76e-13 |
| CRT Incineration | 2-Methylnaphthalene | secondary | -8.71e-12 | -4.41e-13 |
| Fuel Oil #4 Prod. | Biphenyl | secondary | -9.73e-12 | -4.93e-13 |
| Fuel Oil #4 Prod. | Acetophenone | secondary | -1.02e-11 | -5.14e-13 |
| Fuel Oil #4 Prod. | Chlorine | secondary | -1.58e-11 | -7.99e-13 |
| Fuel Oil #4 Prod. | Cumene | secondary | -1.63e-11 | -8.26e-13 |
| Natural Gas Prod. | Vinyl acetate | secondary | -1.73e-11 | -8.75e-13 |
| Natural Gas Prod. | Styrene | secondary | -1.77e-11 | -8.96e-13 |
| Fuel Oil #4 Prod. | 2-Methylnaphthalene | secondary | -1.81e-11 | -9.19e-13 |
| Fuel Oil #4 Prod. | Ethyl Chloride | secondary | -1.93e-11 | -9.77e-13 |
| CRT Incineration | Chlorine | secondary | -1.94e-11 | -9.81e-13 |
| CRT Incineration | Copper (+1 & +2) | secondary | -2.06e-11 | -1.04e-12 |
| CRT Incineration | Aromatic hydrocarbons | secondary | -2.20e-11 | -1.12e-12 |
| CRT Incineration | Zinc (+2) | secondary | -2.24e-11 | -1.13e-12 |
| Natural Gas Prod. | Methyl tert-butyl ether | secondary | -2.42e-11 | -1.23e-12 |
| Natural Gas Prod. | 2-Methylnaphthalene | secondary | -2.71e-11 | -1.37e-12 |
| CRT Incineration | 3-Methylcholanthrene | secondary | -2.72e-11 | -1.38e-12 |
| Fuel Oil #4 Prod. | 1,1,1-Trichloroethane | secondary | -2.72e-11 | -1.38e-12 |
| Fuel Oil #4 Prod. | Ethylene dibromide | secondary | -2.89e-11 | -1.46e-12 |
| Fuel Oil #4 Prod. | Zinc (+2) | secondary | -3.21e-11 | -1.63e-12 |
| CRT Incineration | 5-Methyl chrysene | secondary | -3.27e-11 | -1.66e-12 |
| Natural Gas Prod. | Phenanthrene | secondary | -3.53e-11 | -1.79e-12 |
| CRT Incineration | Benzo[g,h,i]perylene | secondary | -4.06e-11 | -2.06e-12 |
| Natural Gas Prod. | Aluminum (elemental) | secondary | -4.26e-11 | -2.16e-12 |
| Natural Gas Prod. | Ethylbenzene | secondary | -4.85e-11 | -2.45e-12 |
| CRT Incineration | Dichlorobenzene (mixed isomers) | secondary | -4.90e-11 | -2.48e-12 |
| Fuel Oil #4 Prod. | 3-Methylcholanthrene | secondary | -5.66e-11 | -2.87e-12 |
| CRT Incineration | Benzo[a]pyrene | secondary | -5.70e-11 | -2.89e-12 |
| Fuel Oil #4 Prod. | Vinyl acetate | secondary | -7.14e-11 | -3.62e-12 |
| Fuel Oil #4 Prod. | Styrene | secondary | -7.31e-11 | -3.71e-12 |
| CRT Incineration | Pyrene | secondary | -7.81e-11 | -3.96e-12 |
| Fuel Oil #4 Prod. | Phenanthrene | secondary | -7.87e-11 | -3.99e-12 |
| Natural Gas Prod. | Chromium (III) | secondary | -8.08e-11 | -4.09e-12 |

## Table M-39. CRT LCIA Results for the Terrestrial Toxicity Impact Category

| Process Group | Material | LCI Data Type | Terrestrial Toxicity (tox-kg) | % of Total |
|---|---|---|---|---|
| Natural Gas Prod. | 3-Methylcholanthrene | secondary | -8.46e-11 | -4.29e-12 |
| CRT Incineration | Indeno(1,2,3-cd)pyrene | secondary | -9.14e-11 | -4.63e-12 |
| Natural Gas Prod. | 2,4-Dinitrotoluene | secondary | -9.70e-11 | -4.91e-12 |
| Fuel Oil #4 Prod. | Methyl tert-butyl ether | secondary | -1.00e-10 | -5.08e-12 |
| CRT Incineration | Fluoranthene | secondary | -1.01e-10 | -5.10e-12 |
| CRT Incineration | Benzo[a]anthracene | secondary | -1.20e-10 | -6.06e-12 |
| Natural Gas Prod. | Chlorobenzene | secondary | -1.22e-10 | -6.17e-12 |
| CRT Incineration | Fluorene | secondary | -1.29e-10 | -6.53e-12 |
| Natural Gas Prod. | Dichloromethane | secondary | -1.46e-10 | -7.38e-12 |
| CRT Incineration | Chrysene | secondary | -1.49e-10 | -7.57e-12 |
| Natural Gas Prod. | Bromoform | secondary | -1.51e-10 | -7.64e-12 |
| Natural Gas Prod. | 1,2-Dichloroethane | secondary | -1.54e-10 | -7.80e-12 |
| Natural Gas Prod. | Barium cmpds | secondary | -1.61e-10 | -8.15e-12 |
| CRT Incineration | Benzo[b,j,k]fluoranthene | secondary | -1.64e-10 | -8.29e-12 |
| Natural Gas Prod. | Methyl methacrylate | secondary | -1.85e-10 | -9.36e-12 |
| Natural Gas Prod. | Silicon | secondary | -1.86e-10 | -9.43e-12 |
| Fuel Oil #4 Prod. | Ethylbenzene | secondary | -1.99e-10 | -1.01e-11 |
| Natural Gas Prod. | Tetrachloroethylene | secondary | -2.13e-10 | -1.08e-11 |
| Natural Gas Prod. | Methyl ethyl ketone | secondary | -2.16e-10 | -1.09e-11 |
| Fuel Oil #4 Prod. | o-xylene | secondary | -2.16e-10 | -1.10e-11 |
| Natural Gas Prod. | Chlorine | secondary | -2.37e-10 | -1.20e-11 |
| CRT Incineration | Acenaphthene | secondary | -2.58e-10 | -1.31e-11 |
| Natural Gas Prod. | Zinc (+2) | secondary | -2.63e-10 | -1.33e-11 |
| Natural Gas Prod. | Isophorone | secondary | -2.68e-10 | -1.36e-11 |
| Natural Gas Prod. | Dimethyl sulfate | secondary | -2.79e-10 | -1.42e-11 |
| Fuel Oil #4 Prod. | Chromium (III) | secondary | -3.09e-10 | -1.57e-11 |
| Fuel Oil #4 Prod. | Copper (+1 & +2) | secondary | -3.21e-10 | -1.63e-11 |
| Fuel Oil #4 Prod. | Aromatic hydrocarbons | secondary | -3.43e-10 | -1.74e-11 |
| CRT Incineration | Acenaphthylene | secondary | -3.72e-10 | -1.89e-11 |
| Fuel Oil #4 Prod. | 2,4-Dinitrotoluene | secondary | -4.01e-10 | -2.03e-11 |
| Fuel Oil #4 Prod. | Chlorobenzene | secondary | -5.04e-10 | -2.55e-11 |
| Natural Gas Prod. | Di(2-ethylhexyl)phthalate | secondary | -5.84e-10 | -2.96e-11 |
| CRT Incineration | Biphenyl | secondary | -6.02e-10 | -3.05e-11 |
| Fuel Oil #4 Prod. | Dichloromethane | secondary | -6.02e-10 | -3.05e-11 |
| Fuel Oil #4 Prod. | Bromoform | secondary | -6.24e-10 | -3.16e-11 |
| CRT Incineration | Acetophenone | secondary | -6.27e-10 | -3.18e-11 |
| Fuel Oil #4 Prod. | 1,2-Dichloroethane | secondary | -6.36e-10 | -3.22e-11 |
| Natural Gas Prod. | Cadmium | secondary | -7.04e-10 | -3.56e-11 |
| Natural Gas Prod. | Propionaldehyde | secondary | -7.60e-10 | -3.85e-11 |
| Natural Gas Prod. | Acetaldehyde | secondary | -7.60e-10 | -3.85e-11 |
| Fuel Oil #4 Prod. | Methyl methacrylate | secondary | -7.64e-10 | -3.87e-11 |
| Fuel Oil #4 Prod. | Tetrachloroethylene | secondary | -8.79e-10 | -4.46e-11 |
| Fuel Oil #4 Prod. | Methyl ethyl ketone | secondary | -8.93e-10 | -4.53e-11 |
| Natural Gas Prod. | Mercury | secondary | -9.44e-10 | -4.78e-11 |
| Natural Gas Prod. | Methyl hydrazine | secondary | -9.89e-10 | -5.01e-11 |
| CRT Incineration | Cumene | secondary | -1.01e-09 | -5.11e-11 |
| Fuel Oil #4 Prod. | 1,4-Dichlorobenzene | secondary | -1.08e-09 | -5.47e-11 |
| CRT Incineration | Aluminum (elemental) | secondary | -1.08e-09 | -5.49e-11 |
| Fuel Oil #4 Prod. | Isophorone | secondary | -1.11e-09 | -5.61e-11 |
| Fuel Oil #4 Prod. | Dimethyl sulfate | secondary | -1.15e-09 | -5.85e-11 |

## Table M-39. CRT LCIA Results for the Terrestrial Toxicity Impact Category

| Process Group | Material | LCI Data Type | Terrestrial Toxicity (tox-kg) | % of Total |
|---|---|---|---|---|
| CRT Incineration | Ethyl Chloride | secondary | -1.19e-09 | -6.04e-11 |
| Natural Gas Prod. | Cobalt | secondary | -1.32e-09 | -6.71e-11 |
| Natural Gas Prod. | Methyl chloride | secondary | -1.37e-09 | -6.93e-11 |
| Natural Gas Prod. | Beryllium | secondary | -1.40e-09 | -7.11e-11 |
| Natural Gas Prod. | Aluminum (+3) | secondary | -1.44e-09 | -7.27e-11 |
| Natural Gas Prod. | 1,4-Dichlorobenzene | secondary | -1.61e-09 | -8.18e-11 |
| CRT Incineration | 1,1,1-Trichloroethane | secondary | -1.68e-09 | -8.52e-11 |
| Natural Gas Prod. | Acrolein | secondary | -1.69e-09 | -8.55e-11 |
| Fuel Oil #4 Prod. | Cadmium cmpds | secondary | -1.70e-09 | -8.62e-11 |
| CRT Incineration | Ethylene dibromide | secondary | -1.78e-09 | -9.04e-11 |
| Fuel Oil #4 Prod. | Toluene | secondary | -2.04e-09 | -1.03e-10 |
| CRT Incineration | Xylene (mixed isomers) | secondary | -2.13e-09 | -1.08e-10 |
| Natural Gas Prod. | o-xylene | secondary | -2.31e-09 | -1.17e-10 |
| Fuel Oil #4 Prod. | Di(2-ethylhexyl)phthalate | secondary | -2.41e-09 | -1.22e-10 |
| Natural Gas Prod. | PM-10 | secondary | -2.48e-09 | -1.25e-10 |
| Fuel Oil #4 Prod. | Cadmium | secondary | -2.87e-09 | -1.45e-10 |
| Fuel Oil #4 Prod. | Mercury | secondary | -3.11e-09 | -1.57e-10 |
| Fuel Oil #4 Prod. | Propionaldehyde | secondary | -3.14e-09 | -1.59e-10 |
| Fuel Oil #4 Prod. | Acetaldehyde | secondary | -3.14e-09 | -1.59e-10 |
| Natural Gas Prod. | Chloroform | secondary | -3.17e-09 | -1.60e-10 |
| CRT Incineration | Phenanthrene | secondary | -4.02e-09 | -2.04e-10 |
| Natural Gas Prod. | Benzyl chloride | secondary | -4.07e-09 | -2.06e-10 |
| Fuel Oil #4 Prod. | Methyl hydrazine | secondary | -4.09e-09 | -2.07e-10 |
| Natural Gas Prod. | Toluene | secondary | -4.33e-09 | -2.19e-10 |
| CRT Incineration | Vinyl acetate | secondary | -4.41e-09 | -2.23e-10 |
| CRT Incineration | Styrene | secondary | -4.52e-09 | -2.29e-10 |
| CRT Incineration | Silicon | secondary | -4.73e-09 | -2.40e-10 |
| Fuel Oil #4 Prod. | Beryllium | secondary | -5.02e-09 | -2.54e-10 |
| Natural Gas Prod. | Carbon disulfide | secondary | -5.20e-09 | -2.63e-10 |
| Fuel Oil #4 Prod. | Methyl chloride | secondary | -5.65e-09 | -2.86e-10 |
| CRT Incineration | Methyl tert-butyl ether | secondary | -6.19e-09 | -3.14e-10 |
| Fuel Oil #4 Prod. | Acrolein | secondary | -6.98e-09 | -3.53e-10 |
| Natural Gas Prod. | Phenol | secondary | -7.32e-09 | -3.71e-10 |
| Natural Gas Prod. | Nitrate | secondary | -7.54e-09 | -3.82e-10 |
| Fuel Oil #4 Prod. | Cobalt | secondary | -9.27e-09 | -4.69e-10 |
| CRT Incineration | Chloroacetophenone | secondary | -1.04e-08 | -5.27e-10 |
| Natural Gas Prod. | Lead | secondary | -1.09e-08 | -5.50e-10 |
| CRT Incineration | Ethylbenzene | secondary | -1.18e-08 | -5.97e-10 |
| Fuel Oil #4 Prod. | Chloroform | secondary | -1.31e-08 | -6.63e-10 |
| Natural Gas Prod. | Cyanide (-1) | secondary | -1.45e-08 | -7.37e-10 |
| Fuel Oil #4 Prod. | Aluminum (elemental) | secondary | -1.61e-08 | -8.15e-10 |
| Fuel Oil #4 Prod. | Benzyl chloride | secondary | -1.68e-08 | -8.53e-10 |
| CRT Incineration | Chromium (III) | secondary | -1.69e-08 | -8.58e-10 |
| Natural Gas Prod. | Manganese | secondary | -1.98e-08 | -1.00e-09 |
| Fuel Oil #4 Prod. | Carbon disulfide | secondary | -2.15e-08 | -1.09e-09 |
| CRT Incineration | Aluminum (+3) | secondary | -2.23e-08 | -1.13e-09 |
| CRT Incineration | 2,4-Dinitrotoluene | secondary | -2.48e-08 | -1.25e-09 |
| Natural Gas Prod. | Copper | secondary | -2.65e-08 | -1.34e-09 |
| Natural Gas Prod. | Bromomethane | secondary | -2.77e-08 | -1.40e-09 |
| Natural Gas Prod. | 2-Chloroacetophenone | secondary | -2.80e-08 | -1.42e-09 |

## Table M-39. CRT LCIA Results for the Terrestrial Toxicity Impact Category

| Process Group | Material | LCI Data Type | Terrestrial Toxicity (tox-kg) | % of Total |
|---|---|---|---|---|
| Natural Gas Prod. | Barium | secondary | -2.96e-08 | -1.50e-09 |
| CRT Incineration | Chlorobenzene | secondary | -3.11e-08 | -1.58e-09 |
| Natural Gas Prod. | Hydrogen sulfide | secondary | -3.37e-08 | -1.71e-09 |
| CRT Incineration | Dichloromethane | secondary | -3.70e-08 | -1.87e-09 |
| CRT Incineration | 1,2-Dichloroethane | secondary | -3.83e-08 | -1.94e-09 |
| CRT Incineration | Bromoform | secondary | -3.85e-08 | -1.95e-09 |
| Fuel Oil #4 Prod. | Barium cmpds | secondary | -3.89e-08 | -1.97e-09 |
| Fuel Oil #4 Prod. | Lead | secondary | -4.45e-08 | -2.25e-09 |
| CRT Incineration | Methyl methacrylate | secondary | -4.72e-08 | -2.39e-09 |
| Natural Gas Prod. | Chromium (VI) | secondary | -4.74e-08 | -2.40e-09 |
| CRT Incineration | Dimethylbenzanthracene | secondary | -4.82e-08 | -2.44e-09 |
| CRT Incineration | Tetrachloroethylene | secondary | -5.31e-08 | -2.69e-09 |
| Fuel Oil #4 Prod. | Barium | secondary | -5.46e-08 | -2.77e-09 |
| CRT Incineration | Methyl ethyl ketone | secondary | -5.52e-08 | -2.80e-09 |
| Fuel Oil #4 Prod. | Cyanide (-1) | secondary | -6.02e-08 | -3.05e-09 |
| CRT Incineration | Cadmium | secondary | -6.06e-08 | -3.07e-09 |
| Natural Gas Prod. | Nickel | secondary | -6.16e-08 | -3.12e-09 |
| CRT Incineration | PM-10 | secondary | -6.30e-08 | -3.19e-09 |
| Natural Gas Prod. | Naphthalene | secondary | -6.53e-08 | -3.31e-09 |
| CRT Incineration | Toluene | secondary | -6.65e-08 | -3.37e-09 |
| CRT Incineration | Isophorone | secondary | -6.84e-08 | -3.47e-09 |
| Fuel Oil #4 Prod. | Silicon | secondary | -7.03e-08 | -3.56e-09 |
| CRT Incineration | Dimethyl sulfate | secondary | -7.14e-08 | -3.62e-09 |
| Fuel Oil #4 Prod. | Manganese | secondary | -8.00e-08 | -4.05e-09 |
| Fuel Oil #4 Prod. | Naphthalene | secondary | -8.01e-08 | -4.06e-09 |
| Fuel Oil #4 Prod. | Dimethylbenzanthracene | secondary | -9.64e-08 | -4.88e-09 |
| CRT Incineration | Mercury | secondary | -1.12e-07 | -5.66e-09 |
| Fuel Oil #4 Prod. | Bromomethane | secondary | -1.15e-07 | -5.80e-09 |
| Fuel Oil #4 Prod. | 2-Chloroacetophenone | secondary | -1.16e-07 | -5.86e-09 |
| CRT Incineration | Phenol | secondary | -1.17e-07 | -5.94e-09 |
| Fuel Oil #4 Prod. | Copper | secondary | -1.34e-07 | -6.79e-09 |
| Natural Gas Prod. | Dimethylbenzanthracene | secondary | -1.44e-07 | -7.30e-09 |
| CRT Incineration | Di(2-ethylhexyl)phthalate | secondary | -1.49e-07 | -7.55e-09 |
| Fuel Oil #4 Prod. | Nitrate | secondary | -1.58e-07 | -7.99e-09 |
| Fuel Oil #4 Prod. | Chromium (VI) | secondary | -1.82e-07 | -9.21e-09 |
| CRT Incineration | Cobalt | secondary | -1.92e-07 | -9.71e-09 |
| CRT Incineration | Acetaldehyde | secondary | -1.94e-07 | -9.83e-09 |
| CRT Incineration | Propionaldehyde | secondary | -1.94e-07 | -9.83e-09 |
| Natural Gas Prod. | Antimony | secondary | -2.23e-07 | -1.13e-08 |
| CRT Incineration | Methyl hydrazine | secondary | -2.53e-07 | -1.28e-08 |
| CRT Incineration | Beryllium | secondary | -3.00e-07 | -1.52e-08 |
| Fuel Oil #4 Prod. | Aluminum (+3) | secondary | -3.47e-07 | -1.76e-08 |
| CRT Incineration | Methyl chloride | secondary | -3.49e-07 | -1.77e-08 |
| CRT Incineration | Copper | secondary | -4.12e-07 | -2.09e-08 |
| CRT Incineration | Acrolein | secondary | -4.31e-07 | -2.18e-08 |
| CRT Incineration | Hydrogen sulfide | secondary | -6.11e-07 | -3.10e-08 |
| Fuel Oil #4 Prod. | Antimony | secondary | -6.37e-07 | -3.23e-08 |
| CRT Incineration | Hexane | secondary | -7.53e-07 | -3.81e-08 |
| CRT Incineration | Chloroform | secondary | -7.95e-07 | -4.03e-08 |
| Natural Gas Prod. | Hydrofluoric acid | secondary | -8.74e-07 | -4.43e-08 |

## Table M-39. CRT LCIA Results for the Terrestrial Toxicity Impact Category

| Process Group | Material | LCI Data Type | Terrestrial Toxicity (tox-kg) | % of Total |
|---|---|---|---|---|
| Natural Gas Prod. | Phosphorus (yellow or white) | secondary | -8.87e-07 | -4.49e-08 |
| Fuel Oil #4 Prod. | PM-10 | secondary | -9.35e-07 | -4.74e-08 |
| CRT Incineration | Pentane | secondary | -9.44e-07 | -4.78e-08 |
| CRT Incineration | Benzyl chloride | secondary | -1.04e-06 | -5.27e-08 |
| CRT Incineration | Ethane | secondary | -1.13e-06 | -5.70e-08 |
| Fuel Oil #4 Prod. | Nickel | secondary | -1.16e-06 | -5.87e-08 |
| Natural Gas Prod. | Molybdenum | secondary | -1.16e-06 | -5.87e-08 |
| CRT Incineration | Barium | secondary | -1.31e-06 | -6.66e-08 |
| CRT Incineration | Carbon disulfide | secondary | -1.33e-06 | -6.73e-08 |
| Fuel Oil #4 Prod. | Hexane | secondary | -1.36e-06 | -6.90e-08 |
| Fuel Oil #4 Prod. | Phenol | secondary | -1.75e-06 | -8.88e-08 |
| CRT Incineration | Nitrate | secondary | -1.80e-06 | -9.11e-08 |
| Fuel Oil #4 Prod. | Pentane | secondary | -1.97e-06 | -9.96e-08 |
| CRT Incineration | Naphthalene | secondary | -2.03e-06 | -1.03e-07 |
| Natural Gas Prod. | Hexane | secondary | -2.03e-06 | -1.03e-07 |
| Fuel Oil #4 Prod. | Ethane | secondary | -2.34e-06 | -1.19e-07 |
| Natural Gas Prod. | Pentane | secondary | -2.94e-06 | -1.49e-07 |
| Natural Gas Prod. | Ethane | secondary | -3.50e-06 | -1.77e-07 |
| Fuel Oil #4 Prod. | Zinc (elemental) | secondary | -3.56e-06 | -1.80e-07 |
| Fuel Oil #4 Prod. | Hydrofluoric acid | secondary | -3.61e-06 | -1.83e-07 |
| CRT Incineration | Cyanide (-1) | secondary | -3.72e-06 | -1.88e-07 |
| Natural Gas Prod. | Zinc (elemental) | secondary | -4.26e-06 | -2.16e-07 |
| CRT Incineration | Manganese | secondary | -4.89e-06 | -2.48e-07 |
| Natural Gas Prod. | Nitrous oxide | secondary | -5.79e-06 | -2.93e-07 |
| Natural Gas Prod. | Selenium | secondary | -6.09e-06 | -3.08e-07 |
| Fuel Oil #4 Prod. | Molybdenum | secondary | -6.48e-06 | -3.28e-07 |
| Natural Gas Prod. | Fluorides (F-) | secondary | -6.78e-06 | -3.44e-07 |
| CRT Incineration | Bromomethane | secondary | -7.08e-06 | -3.59e-07 |
| CRT Incineration | Nickel | secondary | -9.71e-06 | -4.92e-07 |
| CRT Incineration | Chromium (VI) | secondary | -9.94e-06 | -5.04e-07 |
| CRT Incineration | Molybdenum | secondary | -9.95e-06 | -5.04e-07 |
| Fuel Oil #4 Prod. | Ammonia | secondary | -1.10e-05 | -5.57e-07 |
| Fuel Oil #4 Prod. | Hydrogen sulfide | secondary | -1.27e-05 | -6.45e-07 |
| Natural Gas Prod. | Formaldehyde | secondary | -1.39e-05 | -7.04e-07 |
| CRT Incineration | Antimony | secondary | -2.16e-05 | -1.09e-06 |
| CRT Incineration | Zinc (elemental) | secondary | -2.54e-05 | -1.29e-06 |
| Fuel Oil #4 Prod. | Fluorides (F-) | secondary | -2.64e-05 | -1.34e-06 |
| Fuel Oil #4 Prod. | Selenium | secondary | -2.69e-05 | -1.36e-06 |
| Natural Gas Prod. | Hydrochloric acid | secondary | -3.20e-05 | -1.62e-06 |
| Natural Gas Prod. | Vanadium | secondary | -3.49e-05 | -1.77e-06 |
| Fuel Oil #4 Prod. | Phosphorus (yellow or white) | secondary | -3.98e-05 | -2.02e-06 |
| CRT Incineration | Ammonia | secondary | -4.51e-05 | -2.28e-06 |
| CRT Incineration | Phosphorus (yellow or white) | secondary | -5.50e-05 | -2.78e-06 |
| Fuel Oil #4 Prod. | Nitrous oxide | secondary | -6.18e-05 | -3.13e-06 |
| Fuel Oil #4 Prod. | Hydrochloric acid | secondary | -1.32e-04 | -6.70e-06 |
| Natural Gas Prod. | Ammonia | secondary | -1.35e-04 | -6.83e-06 |
| Natural Gas Prod. | Sulfur oxides | secondary | -1.38e-04 | -7.00e-06 |
| Natural Gas Prod. | Arsenic | secondary | -1.58e-04 | -7.99e-06 |
| Natural Gas Prod. | PM | secondary | -2.08e-04 | -1.05e-05 |
| CRT Incineration | Hydrofluoric acid | secondary | -2.23e-04 | -1.13e-05 |

## Table M-39. CRT LCIA Results for the Terrestrial Toxicity Impact Category

| Process Group | Material | LCI Data Type | Terrestrial Toxicity (tox-kg) | % of Total |
|---|---|---|---|---|
| Fuel Oil #4 Prod. | PM | secondary | -4.35e-04 | -2.20e-05 |
| CRT Incineration | Formaldehyde | secondary | -4.47e-04 | -2.26e-05 |
| Fuel Oil #4 Prod. | Formaldehyde | secondary | -5.52e-04 | -2.80e-05 |
| Fuel Oil #4 Prod. | Arsenic | secondary | -7.57e-04 | -3.83e-05 |
| CRT Incineration | Nitrous oxide | secondary | -1.04e-03 | -5.27e-05 |
| CRT Incineration | Vanadium | secondary | -1.17e-03 | -5.94e-05 |
| CRT Incineration | Selenium | secondary | -1.53e-03 | -7.76e-05 |
| CRT Incineration | Fluorides (F-) | secondary | -1.56e-03 | -7.91e-05 |
| Fuel Oil #4 Prod. | Nitrogen oxides | secondary | -1.93e-03 | -9.77e-05 |
| Fuel Oil #4 Prod. | Benzene | secondary | -2.59e-03 | -1.31e-04 |
| Fuel Oil #4 Prod. | Sulfur oxides | secondary | -2.63e-03 | -1.33e-04 |
| Fuel Oil #4 Prod. | Methane | secondary | -2.80e-03 | -1.42e-04 |
| CRT Incineration | Benzene | secondary | -3.18e-03 | -1.61e-04 |
| Fuel Oil #4 Prod. | Vanadium | secondary | -4.33e-03 | -2.19e-04 |
| CRT Incineration | Hydrochloric acid | secondary | -4.66e-03 | -2.36e-04 |
| Natural Gas Prod. | Nitrogen oxides | secondary | -4.68e-03 | -2.37e-04 |
| CRT Incineration | Nitrogen oxides | secondary | -1.25e-02 | -6.36e-04 |
| CRT Incineration | Carbon monoxide | secondary | -1.44e-02 | -7.31e-04 |
| Fuel Oil #4 Prod. | Carbon monoxide | secondary | -1.51e-02 | -7.64e-04 |
| CRT Incineration | Methane | secondary | -1.52e-02 | -7.68e-04 |
| CRT Incineration | PM | secondary | -1.83e-02 | -9.29e-04 |
| Natural Gas Prod. | Methane | secondary | -2.52e-02 | -1.27e-03 |
| CRT Incineration | Sulfur oxides | secondary | -2.70e-02 | -1.37e-03 |
| Natural Gas Prod. | Carbon monoxide | secondary | -3.19e-02 | -1.62e-03 |
| Natural Gas Prod. | Benzene | secondary | -3.79e-02 | -1.92e-03 |
| CRT Incineration | Arsenic | secondary | -3.84e-02 | -1.95e-03 |
| **Total End-of-life** | | | **2.88e-01** | **1.46e-02** |
| **Total All Life-cycle Stages** | | | **1.97e+03** | **1.00e+02** |

## Table M-40. LCD LCIA Results for the Terrestrial Ecotoxicity Impact Category

| Process Group | Material | LCI Data Type | Terrestrial Toxicity (tox-kg) | % of Total |
|---|---|---|---|---|
| **Materials Processing Life-cycle Stage** | | | | |
| Steel Prod., cold-rolled, semi-finished | Sulfur dioxide | secondary | 1.24e+01 | 1.39e+00 |
| PMMA Sheet Prod. | Sulfur dioxide | secondary | 8.61e+00 | 9.63e-01 |
| Natural Gas Prod. | Benzene | secondary | 5.28e+00 | 5.91e-01 |
| Aluminum Prod. | Sulfur dioxide | secondary | 5.13e+00 | 5.74e-01 |
| Natural Gas Prod. | Carbon monoxide | secondary | 4.44e+00 | 4.97e-01 |
| Polycarbonate Production | Sulfur dioxide | secondary | 4.43e+00 | 4.95e-01 |
| Natural Gas Prod. | Methane | secondary | 3.50e+00 | 3.92e-01 |
| Natural Gas Prod. | Nitrogen oxides | secondary | 6.51e-01 | 7.28e-02 |
| Aluminum Prod. | Titanium tetrachloride | secondary | 2.68e-01 | 3.00e-02 |
| Steel Prod., cold-rolled, semi-finished | Carbon monoxide | secondary | 1.36e-01 | 1.52e-02 |
| Aluminum Prod. | Manganese cmpds | secondary | 6.03e-02 | 6.74e-03 |
| Steel Prod., cold-rolled, semi-finished | PM | secondary | 5.14e-02 | 5.75e-03 |
| Aluminum Prod. | Vanadium | secondary | 4.00e-02 | 4.47e-03 |
| Natural Gas Prod. | PM | secondary | 2.89e-02 | 3.23e-03 |
| PET Resin Production | Carbon monoxide | secondary | 2.61e-02 | 2.92e-03 |
| Steel Prod., cold-rolled, semi-finished | Vanadium | secondary | 2.53e-02 | 2.82e-03 |
| PMMA Sheet Prod. | Carbon monoxide | secondary | 2.35e-02 | 2.62e-03 |
| Polycarbonate Production | Carbon monoxide | secondary | 2.32e-02 | 2.59e-03 |
| Natural Gas Prod. | Arsenic | secondary | 2.20e-02 | 2.46e-03 |
| Natural Gas Prod. | Sulfur oxides | secondary | 1.93e-02 | 2.15e-03 |
| Natural Gas Prod. | Ammonia | secondary | 1.88e-02 | 2.10e-03 |
| Aluminum Prod. | Arsenic cmpds | secondary | 1.77e-02 | 1.98e-03 |
| PMMA Sheet Prod. | Methane | secondary | 1.15e-02 | 1.29e-03 |
| Polycarbonate Production | Methane | secondary | 1.13e-02 | 1.27e-03 |
| Polycarbonate Production | Nitrogen dioxide | secondary | 1.08e-02 | 1.21e-03 |
| PMMA Sheet Prod. | Nitrogen dioxide | secondary | 1.07e-02 | 1.20e-03 |
| Steel Prod., cold-rolled, semi-finished | Fluorides (F-) | secondary | 9.36e-03 | 1.05e-03 |
| Steel Prod., cold-rolled, semi-finished | Manganese cmpds | secondary | 7.30e-03 | 8.17e-04 |
| Styrene-butadiene Copolymer Prod. | Carbon monoxide | secondary | 7.00e-03 | 7.83e-04 |
| Steel Prod., cold-rolled, semi-finished | Nitrogen dioxide | secondary | 6.86e-03 | 7.67e-04 |
| Aluminum Prod. | Carbon monoxide | secondary | 6.42e-03 | 7.18e-04 |
| Steel Prod., cold-rolled, semi-finished | Methane | secondary | 5.34e-03 | 5.97e-04 |
| Natural Gas Prod. | Vanadium | secondary | 4.86e-03 | 5.44e-04 |
| Natural Gas Prod. | Hydrochloric acid | secondary | 4.46e-03 | 4.99e-04 |
| PET Resin Production | Sulfur oxides | secondary | 3.99e-03 | 4.47e-04 |
| Aluminum Prod. | Barium cmpds | secondary | 3.89e-03 | 4.35e-04 |
| Polycarbonate Production | PM | secondary | 3.61e-03 | 4.04e-04 |
| Aluminum Prod. | PM | secondary | 3.31e-03 | 3.71e-04 |
| PMMA Sheet Prod. | PM | secondary | 3.22e-03 | 3.60e-04 |
| Styrene-butadiene Copolymer Prod. | Nitrogen oxides | secondary | 3.06e-03 | 3.42e-04 |
| Styrene-butadiene Copolymer Prod. | Methane | secondary | 3.00e-03 | 3.36e-04 |
| Aluminum Prod. | Methane | secondary | 3.00e-03 | 3.35e-04 |
| Aluminum Prod. | Nitrogen dioxide | secondary | 2.66e-03 | 2.97e-04 |
| Styrene-butadiene Copolymer Prod. | Sulfur oxides | secondary | 2.50e-03 | 2.79e-04 |
| Aluminum Prod. | Selenium | secondary | 2.34e-03 | 2.62e-04 |
| Steel Prod., cold-rolled, semi-finished | Arsenic | secondary | 2.22e-03 | 2.48e-04 |
| Steel Prod., cold-rolled, semi-finished | Phosphorus (yellow or white) | secondary | 1.99e-03 | 2.23e-04 |
| Natural Gas Prod. | Formaldehyde | secondary | 1.93e-03 | 2.16e-04 |
| PET Resin Production | Nitrogen oxides | secondary | 1.72e-03 | 1.93e-04 |

## Table M-40. LCD LCIA Results for the Terrestrial Ecotoxicity Impact Category

| Process Group | Material | LCI Data Type | Terrestrial Toxicity (tox-kg) | % of Total |
|---|---|---|---|---|
| PMMA Sheet Prod. | Ammonia | secondary | 1.04e-03 | 1.16e-04 |
| Steel Prod., cold-rolled, semi-finished | Hydrochloric acid | secondary | 1.00e-03 | 1.12e-04 |
| PET Resin Production | Methane | secondary | 9.98e-04 | 1.12e-04 |
| Natural Gas Prod. | Fluorides (F-) | secondary | 9.45e-04 | 1.06e-04 |
| Steel Prod., cold-rolled, semi-finished | Benzene | secondary | 8.62e-04 | 9.64e-05 |
| Steel Prod., cold-rolled, semi-finished | Barium cmpds | secondary | 8.49e-04 | 9.49e-05 |
| Natural Gas Prod. | Selenium | secondary | 8.48e-04 | 9.48e-05 |
| Natural Gas Prod. | Nitrous oxide | secondary | 8.07e-04 | 9.02e-05 |
| Steel Prod., cold-rolled, semi-finished | Arsenic cmpds | secondary | 7.53e-04 | 8.42e-05 |
| PET Resin Production | PM | secondary | 6.99e-04 | 7.82e-05 |
| Aluminum Prod. | Hydrochloric acid | secondary | 6.64e-04 | 7.43e-05 |
| Natural Gas Prod. | Zinc (elemental) | secondary | 5.94e-04 | 6.64e-05 |
| Aluminum Prod. | Aluminum (+3) | secondary | 5.91e-04 | 6.61e-05 |
| PMMA Sheet Prod. | Nitrates/nitrites | secondary | 5.70e-04 | 6.38e-05 |
| Natural Gas Prod. | Ethane | secondary | 4.88e-04 | 5.46e-05 |
| Aluminum Prod. | Cadmium cmpds | secondary | 4.36e-04 | 4.88e-05 |
| Styrene-butadiene Copolymer Prod. | PM | secondary | 4.34e-04 | 4.85e-05 |
| Natural Gas Prod. | Pentane | secondary | 4.09e-04 | 4.58e-05 |
| Steel Prod., cold-rolled, semi-finished | Titanium tetrachloride | secondary | 4.08e-04 | 4.56e-05 |
| Steel Prod., cold-rolled, semi-finished | Ammonia | secondary | 3.91e-04 | 4.38e-05 |
| Steel Prod., cold-rolled, semi-finished | Nitrous oxide | secondary | 3.81e-04 | 4.26e-05 |
| PMMA Sheet Prod. | Hydrogen cyanide | secondary | 3.73e-04 | 4.17e-05 |
| PMMA Sheet Prod. | Hydrochloric acid | secondary | 2.99e-04 | 3.34e-05 |
| Natural Gas Prod. | Hexane | secondary | 2.83e-04 | 3.17e-05 |
| Polycarbonate Production | Hydrochloric acid | secondary | 2.60e-04 | 2.91e-05 |
| Steel Prod., cold-rolled, semi-finished | Silicon | secondary | 2.48e-04 | 2.77e-05 |
| Aluminum Prod. | Benzene | secondary | 2.12e-04 | 2.37e-05 |
| Steel Prod., cold-rolled, semi-finished | Formaldehyde | secondary | 2.03e-04 | 2.27e-05 |
| Polycarbonate Production | Sulfuric acid | secondary | 1.77e-04 | 1.98e-05 |
| Aluminum Prod. | Barium sulfate | secondary | 1.69e-04 | 1.89e-05 |
| Natural Gas Prod. | Molybdenum | secondary | 1.61e-04 | 1.81e-05 |
| Steel Prod., cold-rolled, semi-finished | Titanium | secondary | 1.60e-04 | 1.79e-05 |
| Steel Prod., cold-rolled, semi-finished | Selenium | secondary | 1.47e-04 | 1.64e-05 |
| PET Resin Production | Hydrochloric acid | secondary | 1.45e-04 | 1.63e-05 |
| Polycarbonate Production | Mercury compounds | secondary | 1.36e-04 | 1.52e-05 |
| PMMA Sheet Prod. | Sulfuric acid | secondary | 1.32e-04 | 1.47e-05 |
| Natural Gas Prod. | Phosphorus (yellow or white) | secondary | 1.24e-04 | 1.38e-05 |
| Natural Gas Prod. | Hydrofluoric acid | secondary | 1.22e-04 | 1.36e-05 |
| Steel Prod., cold-rolled, semi-finished | Ethane | secondary | 1.20e-04 | 1.35e-05 |
| Steel Prod., cold-rolled, semi-finished | Zinc (elemental) | secondary | 1.06e-04 | 1.19e-05 |
| PMMA Sheet Prod. | Mercury compounds | secondary | 1.01e-04 | 1.13e-05 |
| Steel Prod., cold-rolled, semi-finished | Molybdenum | secondary | 9.20e-05 | 1.03e-05 |
| Aluminum Prod. | Hydrofluoric acid | secondary | 8.95e-05 | 1.00e-05 |
| Aluminum Prod. | Zinc (elemental) | secondary | 8.55e-05 | 9.56e-06 |
| Aluminum Prod. | Titanium | secondary | 8.47e-05 | 9.48e-06 |
| Aluminum Prod. | Copper (+1 & +2) | secondary | 6.70e-05 | 7.50e-06 |
| PET Resin Production | Sulfuric acid | secondary | 6.23e-05 | 6.97e-06 |
| Styrene-butadiene Copolymer Prod. | Sulfuric acid | secondary | 6.21e-05 | 6.95e-06 |
| Steel Prod., cold-rolled, semi-finished | Barium | secondary | 6.03e-05 | 6.74e-06 |

## Table M-40. LCD LCIA Results for the Terrestrial Ecotoxicity Impact Category

| Process Group | Material | LCI Data Type | Terrestrial Toxicity (tox-kg) | % of Total |
|---|---|---|---|---|
| Aluminum Prod. | Nitrous oxide | secondary | 5.14e-05 | 5.75e-06 |
| Polycarbonate Production | Fluorides (F-) | secondary | 5.11e-05 | 5.72e-06 |
| Steel Prod., cold-rolled, semi-finished | Tin (Sn++, Sn4+) | secondary | 5.11e-05 | 5.71e-06 |
| Aluminum Prod. | Perfluoromethane | secondary | 4.83e-05 | 5.40e-06 |
| Styrene-butadiene Copolymer Prod. | Mercury compounds | secondary | 4.76e-05 | 5.32e-06 |
| Steel Prod., cold-rolled, semi-finished | Antimony | secondary | 4.66e-05 | 5.21e-06 |
| Polycarbonate Production | Aromatic hydrocarbons | secondary | 4.59e-05 | 5.13e-06 |
| Aluminum Prod. | Silicon | secondary | 4.07e-05 | 4.55e-06 |
| PMMA Sheet Prod. | Fluorine | secondary | 3.80e-05 | 4.25e-06 |
| Natural Gas Prod. | Antimony | secondary | 3.10e-05 | 3.47e-06 |
| Steel Prod., cold-rolled, semi-finished | Silver compounds | secondary | 3.03e-05 | 3.38e-06 |
| Styrene-butadiene Copolymer Prod. | Hydrochloric acid | secondary | 2.98e-05 | 3.33e-06 |
| Styrene-butadiene Copolymer Prod. | Aromatic hydrocarbons | secondary | 2.97e-05 | 3.32e-06 |
| Steel Prod., cold-rolled, semi-finished | Nitrates/nitrites | secondary | 2.45e-05 | 2.74e-06 |
| Steel Prod., cold-rolled, semi-finished | Boron | secondary | 2.41e-05 | 2.70e-06 |
| Steel Prod., cold-rolled, semi-finished | Mercury compounds | secondary | 2.22e-05 | 2.48e-06 |
| Natural Gas Prod. | Dimethylbenzanthracene | secondary | 2.01e-05 | 2.24e-06 |
| PET Resin Production | Fluorine | secondary | 1.80e-05 | 2.01e-06 |
| Styrene-butadiene Copolymer Prod. | Fluorides (F-) | secondary | 1.79e-05 | 2.01e-06 |
| Aluminum Prod. | Nitrate | secondary | 1.70e-05 | 1.90e-06 |
| Steel Prod., cold-rolled, semi-finished | Barium sulfate | secondary | 1.68e-05 | 1.88e-06 |
| Aluminum Prod. | Barium | secondary | 1.46e-05 | 1.63e-06 |
| Steel Prod., cold-rolled, semi-finished | Cadmium cmpds | secondary | 1.32e-05 | 1.48e-06 |
| Steel Prod., cold-rolled, semi-finished | Aluminum (elemental) | secondary | 1.21e-05 | 1.35e-06 |
| Steel Prod., cold-rolled, semi-finished | Acetylene | secondary | 1.14e-05 | 1.28e-06 |
| Steel Prod., cold-rolled, semi-finished | Hydrofluoric acid | secondary | 9.28e-06 | 1.04e-06 |
| Natural Gas Prod. | Naphthalene | secondary | 9.09e-06 | 1.02e-06 |
| Aluminum Prod. | Copper | secondary | 8.87e-06 | 9.92e-07 |
| Natural Gas Prod. | Nickel | secondary | 8.58e-06 | 9.60e-07 |
| Steel Prod., cold-rolled, semi-finished | Pentane | secondary | 8.31e-06 | 9.29e-07 |
| Steel Prod., cold-rolled, semi-finished | Aluminum (+3) | secondary | 7.72e-06 | 8.64e-07 |
| Aluminum Prod. | Nickel cmpds | secondary | 7.09e-06 | 7.93e-07 |
| Steel Prod., cold-rolled, semi-finished | Hydrogen sulfide | secondary | 6.66e-06 | 7.45e-07 |
| Aluminum Prod. | Nickel | secondary | 6.62e-06 | 7.40e-07 |
| Natural Gas Prod. | Chromium (VI) | secondary | 6.61e-06 | 7.39e-07 |
| Aluminum Prod. | Zinc (+2) | secondary | 6.49e-06 | 7.25e-07 |
| Steel Prod., cold-rolled, semi-finished | Copper | secondary | 5.99e-06 | 6.70e-07 |
| Polycarbonate Production | Copper (+1 & +2) | secondary | 5.79e-06 | 6.48e-07 |
| Aluminum Prod. | Ammonia | secondary | 5.76e-06 | 6.44e-07 |
| Aluminum Prod. | Aromatic hydrocarbons | secondary | 5.27e-06 | 5.89e-07 |
| Polycarbonate Production | Phenol | secondary | 5.22e-06 | 5.83e-07 |
| Aluminum Prod. | Nitrites | secondary | 5.03e-06 | 5.63e-07 |
| Natural Gas Prod. | Hydrogen sulfide | secondary | 4.70e-06 | 5.26e-07 |
| PMMA Sheet Prod. | Copper (+1 & +2) | secondary | 4.31e-06 | 4.81e-07 |
| Steel Prod., cold-rolled, semi-finished | Copper (+1 & +2) | secondary | 4.21e-06 | 4.71e-07 |
| Natural Gas Prod. | Barium | secondary | 4.12e-06 | 4.61e-07 |
| Steel Prod., cold-rolled, semi-finished | Nickel | secondary | 3.99e-06 | 4.46e-07 |
| Aluminum Prod. | Aluminum (elemental) | secondary | 3.92e-06 | 4.38e-07 |
| Natural Gas Prod. | 2-Chloroacetophenone | secondary | 3.90e-06 | 4.36e-07 |
| Natural Gas Prod. | Bromomethane | secondary | 3.86e-06 | 4.32e-07 |

## Table M-40. LCD LCIA Results for the Terrestrial Ecotoxicity Impact Category

| Process Group | Material | LCI Data Type | Terrestrial Toxicity (tox-kg) | % of Total |
|---|---|---|---|---|
| PMMA Sheet Prod. | Cyanide (-1) | secondary | 3.83e-06 | 4.29e-07 |
| Aluminum Prod. | Strontium (Sr II) | secondary | 3.72e-06 | 4.16e-07 |
| Natural Gas Prod. | Copper | secondary | 3.69e-06 | 4.12e-07 |
| Steel Prod., cold-rolled, semi-finished | Aromatic hydrocarbons | secondary | 3.51e-06 | 3.93e-07 |
| PMMA Sheet Prod. | Hydrofluoric acid | secondary | 3.45e-06 | 3.86e-07 |
| Aluminum Prod. | Fluoride | secondary | 3.39e-06 | 3.79e-07 |
| Aluminum Prod. | Lead cmpds | secondary | 3.25e-06 | 3.63e-07 |
| Aluminum Prod. | Vanadium (V3+, V5+) | secondary | 3.03e-06 | 3.39e-07 |
| Natural Gas Prod. | Manganese | secondary | 2.76e-06 | 3.09e-07 |
| Steel Prod., cold-rolled, semi-finished | Strontium (Sr II) | secondary | 2.29e-06 | 2.56e-07 |
| Steel Prod., cold-rolled, semi-finished | Hexane | secondary | 2.17e-06 | 2.43e-07 |
| Polycarbonate Production | Ammonia | secondary | 2.07e-06 | 2.31e-07 |
| Polycarbonate Production | Hydrofluoric acid | secondary | 2.06e-06 | 2.31e-07 |
| PET Resin Production | Copper (+1 & +2) | secondary | 2.04e-06 | 2.28e-07 |
| Styrene-butadiene Copolymer Prod. | Copper (+1 & +2) | secondary | 2.03e-06 | 2.27e-07 |
| Natural Gas Prod. | Cyanide (-1) | secondary | 2.03e-06 | 2.27e-07 |
| Aluminum Prod. | Molybdenum (Mo II, Mo III, Mo IV, Mo V, Mo VI) | secondary | 1.84e-06 | 2.06e-07 |
| PMMA Sheet Prod. | Phenol | secondary | 1.75e-06 | 1.96e-07 |
| Steel Prod., cold-rolled, semi-finished | Chromium (VI) | secondary | 1.62e-06 | 1.81e-07 |
| PMMA Sheet Prod. | Hydrogen sulfide | secondary | 1.53e-06 | 1.72e-07 |
| Natural Gas Prod. | Lead | secondary | 1.51e-06 | 1.69e-07 |
| Aluminum Prod. | Hydrogen sulfide | secondary | 1.40e-06 | 1.57e-07 |
| Styrene-butadiene Copolymer Prod. | Nitrate | secondary | 1.27e-06 | 1.42e-07 |
| Steel Prod., cold-rolled, semi-finished | Boric acid | secondary | 1.06e-06 | 1.19e-07 |
| Natural Gas Prod. | Nitrate | secondary | 1.05e-06 | 1.18e-07 |
| Polycarbonate Production | Halogenated hydrocarbons (unspecified) | secondary | 1.03e-06 | 1.15e-07 |
| Polycarbonate Production | Hydrogen sulfide | secondary | 1.03e-06 | 1.15e-07 |
| Natural Gas Prod. | Phenol | secondary | 1.02e-06 | 1.14e-07 |
| Steel Prod., cold-rolled, semi-finished | Bromine | secondary | 9.94e-07 | 1.11e-07 |
| PET Resin Production | Hydrofluoric acid | secondary | 9.08e-07 | 1.01e-07 |
| Steel Prod., cold-rolled, semi-finished | Uranium | secondary | 8.25e-07 | 9.23e-08 |
| PMMA Sheet Prod. | Aromatic hydrocarbons | secondary | 7.67e-07 | 8.58e-08 |
| Steel Prod., cold-rolled, semi-finished | Toluene | secondary | 7.44e-07 | 8.32e-08 |
| Natural Gas Prod. | Carbon disulfide | secondary | 7.24e-07 | 8.10e-08 |
| Aluminum Prod. | Toluene | secondary | 6.75e-07 | 7.55e-08 |
| Natural Gas Prod. | Toluene | secondary | 6.03e-07 | 6.74e-08 |
| Steel Prod., cold-rolled, semi-finished | Ethylene | secondary | 6.02e-07 | 6.73e-08 |
| Steel Prod., cold-rolled, semi-finished | Cyanide (-1) | secondary | 5.92e-07 | 6.62e-08 |
| Steel Prod., cold-rolled, semi-finished | Methanol | secondary | 5.84e-07 | 6.54e-08 |
| Natural Gas Prod. | Benzyl chloride | secondary | 5.67e-07 | 6.35e-08 |
| Steel Prod., cold-rolled, semi-finished | Xylene (mixed isomers) | secondary | 5.50e-07 | 6.15e-08 |
| Steel Prod., cold-rolled, semi-finished | Lead | secondary | 5.40e-07 | 6.04e-08 |
| Steel Prod., cold-rolled, semi-finished | Naphthalene | secondary | 5.39e-07 | 6.02e-08 |
| Polycarbonate Production | Chlorine | secondary | 5.16e-07 | 5.77e-08 |
| Aluminum Prod. | Xylene (mixed isomers) | secondary | 5.13e-07 | 5.73e-08 |
| Steel Prod., cold-rolled, semi-finished | Phenol | secondary | 4.75e-07 | 5.31e-08 |
| Steel Prod., cold-rolled, semi-finished | Heptane | secondary | 4.57e-07 | 5.12e-08 |
| PMMA Sheet Prod. | Nickel cmpds | secondary | 4.56e-07 | 5.10e-08 |

## Table M-40. LCD LCIA Results for the Terrestrial Ecotoxicity Impact Category

| Process Group | Material | LCI Data Type | Terrestrial Toxicity (tox-kg) | % of Total |
|---|---|---|---|---|
| Aluminum Prod. | Lead | secondary | 4.47e-07 | 5.00e-08 |
| Natural Gas Prod. | Chloroform | secondary | 4.41e-07 | 4.93e-08 |
| Steel Prod., cold-rolled, semi-finished | Lead cmpds | secondary | 4.33e-07 | 4.84e-08 |
| PMMA Sheet Prod. | Chlorine | secondary | 3.83e-07 | 4.29e-08 |
| Styrene-butadiene Copolymer Prod. | Aluminum (+3) | secondary | 3.62e-07 | 4.05e-08 |
| Natural Gas Prod. | PM-10 | secondary | 3.45e-07 | 3.86e-08 |
| Aluminum Prod. | Chromium (VI) | secondary | 3.31e-07 | 3.71e-08 |
| Natural Gas Prod. | o-xylene | secondary | 3.21e-07 | 3.59e-08 |
| Steel Prod., cold-rolled, semi-finished | Nickel cmpds | secondary | 2.92e-07 | 3.26e-08 |
| Steel Prod., cold-rolled, semi-finished | Zinc (+2) | secondary | 2.60e-07 | 2.91e-08 |
| Polycarbonate Production | Aluminum (+3) | secondary | 2.58e-07 | 2.88e-08 |
| Polycarbonate Production | Ethanethiol | secondary | 2.58e-07 | 2.88e-08 |
| Polycarbonate Production | Lead | secondary | 2.58e-07 | 2.88e-08 |
| Polycarbonate Production | Mercury | secondary | 2.58e-07 | 2.88e-08 |
| Polycarbonate Production | Nickel (+2) | secondary | 2.58e-07 | 2.88e-08 |
| Polycarbonate Production | Nitrate | secondary | 2.58e-07 | 2.88e-08 |
| Polycarbonate Production | Nitrous oxide | secondary | 2.58e-07 | 2.88e-08 |
| Polycarbonate Production | Zinc (+2) | secondary | 2.58e-07 | 2.88e-08 |
| Aluminum Prod. | Phenol | secondary | 2.38e-07 | 2.66e-08 |
| Natural Gas Prod. | Acrolein | secondary | 2.35e-07 | 2.63e-08 |
| Natural Gas Prod. | 1,4-Dichlorobenzene | secondary | 2.25e-07 | 2.51e-08 |
| Styrene-butadiene Copolymer Prod. | Phenol | secondary | 2.15e-07 | 2.41e-08 |
| Natural Gas Prod. | Aluminum (+3) | secondary | 2.00e-07 | 2.24e-08 |
| Steel Prod., cold-rolled, semi-finished | Cobalt | secondary | 1.98e-07 | 2.22e-08 |
| PET Resin Production | Phenol | secondary | 1.98e-07 | 2.21e-08 |
| Natural Gas Prod. | Beryllium | secondary | 1.95e-07 | 2.19e-08 |
| PMMA Sheet Prod. | Aluminum (+3) | secondary | 1.92e-07 | 2.14e-08 |
| PMMA Sheet Prod. | Ethanethiol | secondary | 1.92e-07 | 2.14e-08 |
| PMMA Sheet Prod. | Lead | secondary | 1.92e-07 | 2.14e-08 |
| PMMA Sheet Prod. | Mercury | secondary | 1.92e-07 | 2.14e-08 |
| PMMA Sheet Prod. | Nitrous oxide | secondary | 1.92e-07 | 2.14e-08 |
| PMMA Sheet Prod. | Zinc (+2) | secondary | 1.92e-07 | 2.14e-08 |
| Natural Gas Prod. | Methyl chloride | secondary | 1.90e-07 | 2.13e-08 |
| Natural Gas Prod. | Cobalt | secondary | 1.85e-07 | 2.06e-08 |
| PET Resin Production | Chlorine | secondary | 1.82e-07 | 2.03e-08 |
| PET Resin Production | Mercury | secondary | 1.82e-07 | 2.03e-08 |
| Styrene-butadiene Copolymer Prod. | Chlorine | secondary | 1.81e-07 | 2.02e-08 |
| Styrene-butadiene Copolymer Prod. | Hydrofluoric acid | secondary | 1.81e-07 | 2.02e-08 |
| Steel Prod., cold-rolled, semi-finished | Manganese | secondary | 1.76e-07 | 1.97e-08 |
| Aluminum Prod. | Acetic acid | secondary | 1.57e-07 | 1.76e-08 |
| PET Resin Production | Ammonia | secondary | 1.56e-07 | 1.74e-08 |
| Styrene-butadiene Copolymer Prod. | Ammonia | secondary | 1.55e-07 | 1.74e-08 |
| Aluminum Prod. | Cobalt | secondary | 1.53e-07 | 1.71e-08 |
| Steel Prod., cold-rolled, semi-finished | Vanadium (V3+, V5+) | secondary | 1.45e-07 | 1.63e-08 |
| Natural Gas Prod. | Methyl hydrazine | secondary | 1.38e-07 | 1.54e-08 |
| Steel Prod., cold-rolled, semi-finished | Boron (B III) | secondary | 1.32e-07 | 1.48e-08 |
| Natural Gas Prod. | Mercury | secondary | 1.32e-07 | 1.47e-08 |
| Aluminum Prod. | Cadmium | secondary | 1.10e-07 | 1.23e-08 |
| Natural Gas Prod. | Acetaldehyde | secondary | 1.06e-07 | 1.18e-08 |
| Natural Gas Prod. | Propionaldehyde | secondary | 1.06e-07 | 1.18e-08 |

## Table M-40. LCD LCIA Results for the Terrestrial Ecotoxicity Impact Category

| Process Group | Material | LCI Data Type | Terrestrial Toxicity (tox-kg) | % of Total |
|---|---|---|---|---|
| Steel Prod., cold-rolled, semi-finished | Acetic acid | secondary | 1.00e-07 | 1.12e-08 |
| Natural Gas Prod. | Cadmium | secondary | 9.80e-08 | 1.10e-08 |
| Steel Prod., cold-rolled, semi-finished | Triethylene glycol | secondary | 9.39e-08 | 1.05e-08 |
| PET Resin Production | Aluminum (+3) | secondary | 9.08e-08 | 1.01e-08 |
| PET Resin Production | Hydrogen sulfide | secondary | 9.08e-08 | 1.01e-08 |
| PET Resin Production | Lead | secondary | 9.08e-08 | 1.01e-08 |
| PET Resin Production | Nickel (+2) | secondary | 9.08e-08 | 1.01e-08 |
| PET Resin Production | Nitrate | secondary | 9.08e-08 | 1.01e-08 |
| PET Resin Production | Nitrous oxide | secondary | 9.08e-08 | 1.01e-08 |
| PET Resin Production | Zinc (+2) | secondary | 9.08e-08 | 1.01e-08 |
| Styrene-butadiene Copolymer Prod. | Halogenated hydrocarbons (unspecified) | secondary | 9.04e-08 | 1.01e-08 |
| Styrene-butadiene Copolymer Prod. | Hydrogen sulfide | secondary | 9.04e-08 | 1.01e-08 |
| Styrene-butadiene Copolymer Prod. | Lead | secondary | 9.04e-08 | 1.01e-08 |
| Styrene-butadiene Copolymer Prod. | Mercury | secondary | 9.04e-08 | 1.01e-08 |
| Styrene-butadiene Copolymer Prod. | Nickel (+2) | secondary | 9.04e-08 | 1.01e-08 |
| Styrene-butadiene Copolymer Prod. | Nitrous oxide | secondary | 9.04e-08 | 1.01e-08 |
| Styrene-butadiene Copolymer Prod. | Zinc (+2) | secondary | 9.04e-08 | 1.01e-08 |
| Aluminum Prod. | Triethylene glycol | secondary | 9.03e-08 | 1.01e-08 |
| Steel Prod., cold-rolled, semi-finished | Morpholine | secondary | 8.78e-08 | 9.82e-09 |
| Steel Prod., cold-rolled, semi-finished | Strontium | secondary | 8.69e-08 | 9.72e-09 |
| Steel Prod., cold-rolled, semi-finished | Propylene | secondary | 8.67e-08 | 9.70e-09 |
| Steel Prod., cold-rolled, semi-finished | Cadmium | secondary | 8.54e-08 | 9.55e-09 |
| Natural Gas Prod. | Di(2-ethylhexyl)phthalate | secondary | 8.13e-08 | 9.09e-09 |
| Aluminum Prod. | Mercury | secondary | 7.51e-08 | 8.40e-09 |
| Steel Prod., cold-rolled, semi-finished | Acetaldehyde | secondary | 7.50e-08 | 8.39e-09 |
| Aluminum Prod. | Cyanide (-1) | secondary | 7.05e-08 | 7.89e-09 |
| Aluminum Prod. | HALON-1301 | secondary | 6.72e-08 | 7.51e-09 |
| Steel Prod., cold-rolled, semi-finished | Rubidium ion (Rb+) | secondary | 5.93e-08 | 6.64e-09 |
| Steel Prod., cold-rolled, semi-finished | Fluorine | secondary | 5.57e-08 | 6.23e-09 |
| Aluminum Prod. | Chromium (III) | secondary | 4.88e-08 | 5.46e-09 |
| Steel Prod., cold-rolled, semi-finished | Molybdenum (Mo II, Mo III, Mo IV, Mo V, Mo VI) | secondary | 4.44e-08 | 4.97e-09 |
| Steel Prod., cold-rolled, semi-finished | Benzo[a]pyrene | secondary | 4.37e-08 | 4.89e-09 |
| Natural Gas Prod. | Dimethyl sulfate | secondary | 3.89e-08 | 4.35e-09 |
| Steel Prod., cold-rolled, semi-finished | Acetone | secondary | 3.87e-08 | 4.33e-09 |
| Natural Gas Prod. | Isophorone | secondary | 3.73e-08 | 4.17e-09 |
| Natural Gas Prod. | Zinc (+2) | secondary | 3.66e-08 | 4.09e-09 |
| Natural Gas Prod. | Chlorine | secondary | 3.31e-08 | 3.70e-09 |
| Natural Gas Prod. | Methyl ethyl ketone | secondary | 3.01e-08 | 3.37e-09 |
| Natural Gas Prod. | Tetrachloroethylene | secondary | 2.96e-08 | 3.31e-09 |
| Steel Prod., cold-rolled, semi-finished | Lanthanum | secondary | 2.63e-08 | 2.95e-09 |
| Natural Gas Prod. | Silicon | secondary | 2.59e-08 | 2.90e-09 |
| Natural Gas Prod. | Methyl methacrylate | secondary | 2.57e-08 | 2.88e-09 |
| Steel Prod., cold-rolled, semi-finished | Ethylbenzene | secondary | 2.57e-08 | 2.88e-09 |
| Steel Prod., cold-rolled, semi-finished | Beryllium | secondary | 2.31e-08 | 2.58e-09 |
| Natural Gas Prod. | Barium cmpds | secondary | 2.24e-08 | 2.51e-09 |
| Natural Gas Prod. | 1,2-Dichloroethane | secondary | 2.14e-08 | 2.40e-09 |
| Natural Gas Prod. | Bromoform | secondary | 2.10e-08 | 2.35e-09 |
| Natural Gas Prod. | Dichloromethane | secondary | 2.03e-08 | 2.27e-09 |

## Table M-40. LCD LCIA Results for the Terrestrial Ecotoxicity Impact Category

| Process Group | Material | LCI Data Type | Terrestrial Toxicity (tox-kg) | % of Total |
|---|---|---|---|---|
| Natural Gas Prod. | Chlorobenzene | secondary | 1.70e-08 | 1.90e-09 |
| Aluminum Prod. | Strontium | secondary | 1.67e-08 | 1.87e-09 |
| Steel Prod., cold-rolled, semi-finished | Mercury | secondary | 1.60e-08 | 1.79e-09 |
| Steel Prod., cold-rolled, semi-finished | Thorium | secondary | 1.41e-08 | 1.58e-09 |
| Natural Gas Prod. | 2,4-Dinitrotoluene | secondary | 1.35e-08 | 1.51e-09 |
| Steel Prod., cold-rolled, semi-finished | HALON-1301 | secondary | 1.23e-08 | 1.38e-09 |
| Natural Gas Prod. | 3-Methylcholanthrene | secondary | 1.18e-08 | 1.32e-09 |
| Natural Gas Prod. | Chromium (III) | secondary | 1.13e-08 | 1.26e-09 |
| Steel Prod., cold-rolled, semi-finished | Tin | secondary | 8.21e-09 | 9.19e-10 |
| Steel Prod., cold-rolled, semi-finished | Phosphorus pentoxide | secondary | 7.88e-09 | 8.81e-10 |
| Natural Gas Prod. | Ethylbenzene | secondary | 6.75e-09 | 7.55e-10 |
| Steel Prod., cold-rolled, semi-finished | Scandium | secondary | 6.40e-09 | 7.16e-10 |
| Natural Gas Prod. | Aluminum (elemental) | secondary | 5.93e-09 | 6.64e-10 |
| Steel Prod., cold-rolled, semi-finished | Chlorine | secondary | 5.59e-09 | 6.25e-10 |
| Natural Gas Prod. | Phenanthrene | secondary | 4.92e-09 | 5.50e-10 |
| Steel Prod., cold-rolled, semi-finished | Thallium | secondary | 4.36e-09 | 4.87e-10 |
| Aluminum Prod. | 1,2-Dichlorotetrafluoroethane | secondary | 3.88e-09 | 4.34e-10 |
| Natural Gas Prod. | 2-Methylnaphthalene | secondary | 3.78e-09 | 4.23e-10 |
| Natural Gas Prod. | Methyl tert-butyl ether | secondary | 3.38e-09 | 3.78e-10 |
| Aluminum Prod. | Perfluoroethane | secondary | 3.15e-09 | 3.52e-10 |
| Steel Prod., cold-rolled, semi-finished | Chromium (III) | secondary | 2.59e-09 | 2.90e-10 |
| Steel Prod., cold-rolled, semi-finished | Nitrites | secondary | 2.54e-09 | 2.85e-10 |
| Natural Gas Prod. | Styrene | secondary | 2.46e-09 | 2.76e-10 |
| Natural Gas Prod. | Vinyl acetate | secondary | 2.40e-09 | 2.69e-10 |
| Natural Gas Prod. | Cadmium cmpds | secondary | 9.80e-10 | 1.10e-10 |
| Natural Gas Prod. | Ethylene dibromide | secondary | 9.73e-10 | 1.09e-10 |
| Steel Prod., cold-rolled, semi-finished | Edetic acid (EDTA) | secondary | 9.46e-10 | 1.06e-10 |
| Natural Gas Prod. | 1,1,1-Trichloroethane | secondary | 9.17e-10 | 1.03e-10 |
| Steel Prod., cold-rolled, semi-finished | Hypochlorous acid | secondary | 8.62e-10 | 9.64e-11 |
| Steel Prod., cold-rolled, semi-finished | Cobalt (Co I, Co II, Co III) | secondary | 7.70e-10 | 8.61e-11 |
| Steel Prod., cold-rolled, semi-finished | Dichloromethane | secondary | 7.10e-10 | 7.94e-11 |
| Natural Gas Prod. | Ethyl Chloride | secondary | 6.50e-10 | 7.27e-11 |
| Natural Gas Prod. | Cumene | secondary | 5.50e-10 | 6.15e-11 |
| Natural Gas Prod. | Acenaphthylene | secondary | 4.89e-10 | 5.47e-11 |
| Natural Gas Prod. | Benzo[a]anthracene | secondary | 3.92e-10 | 4.38e-11 |
| Natural Gas Prod. | Chrysene | secondary | 3.77e-10 | 4.22e-11 |
| Natural Gas Prod. | Indeno(1,2,3-cd)pyrene | secondary | 3.44e-10 | 3.85e-11 |
| Natural Gas Prod. | Acetophenone | secondary | 3.42e-10 | 3.83e-11 |
| Natural Gas Prod. | Biphenyl | secondary | 3.28e-10 | 3.67e-11 |
| Natural Gas Prod. | Acenaphthene | secondary | 3.14e-10 | 3.52e-11 |
| Natural Gas Prod. | Benzo[b]fluoranthene | secondary | 2.91e-10 | 3.26e-11 |
| Natural Gas Prod. | Benzo[g,h,i]perylene | secondary | 2.23e-10 | 2.49e-11 |
| Natural Gas Prod. | Benzo[a]pyrene | secondary | 2.20e-10 | 2.46e-11 |
| Natural Gas Prod. | Dibenzo[a,h]anthracene | secondary | 1.98e-10 | 2.21e-11 |
| Natural Gas Prod. | Aromatic hydrocarbons | secondary | 1.98e-10 | 2.21e-11 |
| Natural Gas Prod. | Copper (+1 & +2) | secondary | 1.85e-10 | 2.07e-11 |
| Natural Gas Prod. | Pyrene | secondary | 1.71e-10 | 1.91e-11 |
| Natural Gas Prod. | Fluorene | secondary | 1.14e-10 | 1.28e-11 |
| Natural Gas Prod. | Fluoranthene | secondary | 1.02e-10 | 1.14e-11 |
| Steel Prod., cold-rolled, semi-finished | Isopropylpropionate | secondary | 9.91e-11 | 1.11e-11 |

## Table M-40. LCD LCIA Results for the Terrestrial Ecotoxicity Impact Category

| Process Group | Material | LCI Data Type | Terrestrial Toxicity (tox-kg) | % of Total |
|---|---|---|---|---|
| Natural Gas Prod. | Benzo[b,j,k]fluoranthene | secondary | 8.92e-11 | 9.97e-12 |
| Steel Prod., cold-rolled, semi-finished | Lithium salts | secondary | 4.86e-11 | 5.43e-12 |
| Steel Prod., cold-rolled, semi-finished | Chloroform | secondary | 2.65e-11 | 2.96e-12 |
| Steel Prod., cold-rolled, semi-finished | Zirconium | secondary | 2.28e-11 | 2.55e-12 |
| Steel Prod., cold-rolled, semi-finished | Perfluoromethane | secondary | 2.20e-11 | 2.46e-12 |
| Natural Gas Prod. | 5-Methyl chrysene | secondary | 1.78e-11 | 1.99e-12 |
| Natural Gas Prod. | Anthracene | secondary | 6.68e-12 | 7.47e-13 |
| Natural Gas Prod. | Nickel cmpds | secondary | 1.96e-12 | 2.19e-13 |
| Natural Gas Prod. | Lead cmpds | secondary | 1.65e-12 | 1.84e-13 |
| Natural Gas Prod. | Mercury compounds | secondary | 9.98e-13 | 1.12e-13 |
| Natural Gas Prod. | HALON-1301 | secondary | 7.17e-13 | 8.02e-14 |
| Steel Prod., cold-rolled, semi-finished | Trichloroethylene | secondary | 3.80e-13 | 4.25e-14 |
| Natural Gas Prod. | Halogenated matter (organic) | secondary | 1.65e-13 | 1.84e-14 |
| Steel Prod., cold-rolled, semi-finished | Propionaldehyde | secondary | 2.61e-14 | 2.91e-15 |
| Steel Prod., cold-rolled, semi-finished | Tetrachloroethylene | secondary | 1.07e-14 | 1.20e-15 |
| Steel Prod., cold-rolled, semi-finished | Benzaldehyde | secondary | 2.32e-15 | 2.59e-16 |
| Steel Prod., cold-rolled, semi-finished | 1,1,1-Trichloroethane | secondary | 1.57e-15 | 1.76e-16 |
| Natural Gas Prod. | Halogenated hydrocarbons (unspecified) | secondary | 4.11e-16 | 4.60e-17 |
| Steel Prod., cold-rolled, semi-finished | Hexachloroethane | secondary | 6.02e-17 | 6.73e-18 |
| **Total Materials Processing** | | | **4.54e+01** | **5.08e+00** |
| **Manufacturing Life-cycle Stage** | | | | |
| Japanese Electric Grid | Sulfur dioxide | model/secondary | 1.92e+02 | 2.14e+01 |
| Monitor/module | Phosphine | primary | 2.87e+01 | 3.21e+00 |
| Monitor/module | Phosphorus (yellow or white) | primary | 3.42e+00 | 3.82e-01 |
| US electric grid | Sulfur dioxide | model/secondary | 3.19e+00 | 3.57e-01 |
| Monitor/module | Fluorides (F-) | primary | 2.54e+00 | 2.84e-01 |
| Monitor/module | Tetramethyl ammonium hydroxide | primary | 6.43e-01 | 7.19e-02 |
| Monitor/module | Nitrogen oxides | primary | 5.48e-01 | 6.13e-02 |
| Monitor/module | Hydrochloric acid | primary | 2.77e-01 | 3.10e-02 |
| LPG Production | Carbon monoxide | secondary | 2.56e-01 | 2.87e-02 |
| Monitor/module | Nitrogen fluoride | primary | 2.45e-01 | 2.74e-02 |
| Japanese Electric Grid | Nitrogen oxides | model/secondary | 1.37e-01 | 1.53e-02 |
| Natural Gas Prod. | Benzene | secondary | 1.19e-01 | 1.33e-02 |
| Japanese Electric Grid | Carbon monoxide | model/secondary | 1.18e-01 | 1.32e-02 |
| Monitor/module | Ammonia | primary | 1.07e-01 | 1.20e-02 |
| Natural Gas Prod. | Carbon monoxide | secondary | 1.00e-01 | 1.12e-02 |
| Natural Gas Prod. | Methane | secondary | 7.91e-02 | 8.85e-03 |
| Japanese Electric Grid | Vanadium | model/secondary | 7.62e-02 | 8.53e-03 |
| Monitor/module | Hydrofluoric acid | primary | 5.21e-02 | 5.82e-03 |
| LPG Production | Vanadium | secondary | 5.02e-02 | 5.62e-03 |
| LPG Production | Benzene | secondary | 4.11e-02 | 4.60e-03 |
| LPG Production | Methane | secondary | 4.02e-02 | 4.50e-03 |
| LPG Production | Sulfur oxides | secondary | 3.85e-02 | 4.30e-03 |
| Japanese Electric Grid | Arsenic | model/secondary | 3.51e-02 | 3.92e-03 |
| Backlight | Nitrogen oxides | primary | 2.95e-02 | 3.29e-03 |
| LPG Production | Nitrogen oxides | secondary | 2.75e-02 | 3.07e-03 |
| LCD glass mfg. | Fluorides (F-) | primary | 2.70e-02 | 3.01e-03 |
| Japanese Electric Grid | Hydrochloric acid | model/secondary | 2.11e-02 | 2.36e-03 |
| Panel components | Phosphorus (yellow or white) | primary | 1.97e-02 | 2.20e-03 |

## Table M-40. LCD LCIA Results for the Terrestrial Ecotoxicity Impact Category

| Process Group | Material | LCI Data Type | Terrestrial Toxicity (tox-kg) | % of Total |
|---|---|---|---|---|
| Natural Gas Prod. | Nitrogen oxides | secondary | 1.47e-02 | 1.64e-03 |
| LPG Production | Arsenic | secondary | 9.91e-03 | 1.11e-03 |
| Monitor/module | N-bromoacetamide | primary | 9.18e-03 | 1.03e-03 |
| Monitor/module | Sulfur hexafluoride | primary | 7.30e-03 | 8.16e-04 |
| Japanese Electric Grid | PM-10 | model/secondary | 6.72e-03 | 7.52e-04 |
| LPG Production | Formaldehyde | secondary | 6.43e-03 | 7.19e-04 |
| LPG Production | PM | secondary | 6.19e-03 | 6.92e-04 |
| Monitor/module | Isopropyl alcohol | primary | 4.55e-03 | 5.09e-04 |
| Japanese Electric Grid | Fluorides (F-) | model/secondary | 4.41e-03 | 4.93e-04 |
| Japanese Electric Grid | Selenium | model/secondary | 4.29e-03 | 4.80e-04 |
| Japanese Electric Grid | Formaldehyde | model/secondary | 3.93e-03 | 4.39e-04 |
| US electric grid | Nitrogen oxides | model/secondary | 2.28e-03 | 2.55e-04 |
| Fuel Oil #4 Prod. | Carbon monoxide | secondary | 2.16e-03 | 2.42e-04 |
| Japanese Electric Grid | Zinc (elemental) | model/secondary | 2.06e-03 | 2.31e-04 |
| LCD glass mfg. | Nitrogen oxides | primary | 2.04e-03 | 2.29e-04 |
| PWB Mfg. | Formaldehyde | model/secondary | 1.96e-03 | 2.19e-04 |
| US electric grid | Carbon monoxide | model/secondary | 1.96e-03 | 2.19e-04 |
| LPG Production | Hydrochloric acid | secondary | 1.77e-03 | 1.97e-04 |
| Monitor/module | Arsenic | primary | 1.70e-03 | 1.90e-04 |
| Monitor/module | Monosilane | primary | 1.54e-03 | 1.72e-04 |
| US electric grid | Methane | model/secondary | 1.25e-03 | 1.40e-04 |
| Monitor/module | Sulfur oxides | primary | 1.12e-03 | 1.25e-04 |
| Japanese Electric Grid | Antimony | model/secondary | 1.09e-03 | 1.22e-04 |
| US electric grid | Arsenic | model/secondary | 1.08e-03 | 1.21e-04 |
| US electric grid | Hydrochloric acid | model/secondary | 9.54e-04 | 1.07e-04 |
| Fuel Oil #6 Prod. | Carbon monoxide | secondary | 8.92e-04 | 9.98e-05 |
| LPG Production | Nitrous oxide | secondary | 7.78e-04 | 8.71e-05 |
| Fuel Oil #2 Prod. | Carbon monoxide | secondary | 7.27e-04 | 8.13e-05 |
| Natural Gas Prod. | PM | secondary | 6.53e-04 | 7.30e-05 |
| Fuel Oil #4 Prod. | Vanadium | secondary | 6.21e-04 | 6.94e-05 |
| Monitor/module | Hexane | primary | 5.88e-04 | 6.58e-05 |
| Japanese Electric Grid | Hydrofluoric acid | model/secondary | 5.77e-04 | 6.45e-05 |
| Natural Gas Prod. | Arsenic | secondary | 4.96e-04 | 5.55e-05 |
| LPG Production | Phosphorus (yellow or white) | secondary | 4.71e-04 | 5.27e-05 |
| Japanese Electric Grid | Molybdenum | model/secondary | 4.42e-04 | 4.94e-05 |
| Natural Gas Prod. | Sulfur oxides | secondary | 4.35e-04 | 4.86e-05 |
| Natural Gas Prod. | Ammonia | secondary | 4.24e-04 | 4.74e-05 |
| Panel components | Nitrogen oxides | primary | 4.11e-04 | 4.60e-05 |
| Fuel Oil #4 Prod. | Methane | secondary | 4.02e-04 | 4.49e-05 |
| Fuel Oil #4 Prod. | Sulfur oxides | secondary | 3.77e-04 | 4.22e-05 |
| Japanese Electric Grid | Nitrous oxide | model/secondary | 3.76e-04 | 4.20e-05 |
| Fuel Oil #4 Prod. | Benzene | secondary | 3.71e-04 | 4.15e-05 |
| Fuel Oil #6 Prod. | Vanadium | secondary | 3.67e-04 | 4.10e-05 |
| LPG Production | Fluorides (F-) | secondary | 3.60e-04 | 4.03e-05 |
| LPG Production | Selenium | secondary | 3.56e-04 | 3.98e-05 |
| Monitor/module | Zinc (elemental) | primary | 3.13e-04 | 3.50e-05 |
| Japanese Electric Grid | Benzene | model/secondary | 3.06e-04 | 3.42e-05 |
| Fuel Oil #4 Prod. | Nitrogen oxides | secondary | 2.77e-04 | 3.09e-05 |
| Japanese Electric Grid | Methane | model/secondary | 2.73e-04 | 3.06e-05 |
| Monitor/module | Nitric acid | primary | 2.68e-04 | 3.00e-05 |

## Table M-40. LCD LCIA Results for the Terrestrial Ecotoxicity Impact Category

| Process Group | Material | LCI Data Type | Terrestrial Toxicity (tox-kg) | % of Total |
|---|---|---|---|---|
| Fuel Oil #6 Prod. | Methane | secondary | 2.01e-04 | 2.24e-05 |
| Fuel Oil #6 Prod. | Sulfur oxides | secondary | 1.86e-04 | 2.08e-05 |
| Monitor/module | Phosphoric acid | primary | 1.85e-04 | 2.07e-05 |
| US electric grid | Selenium | model/secondary | 1.80e-04 | 2.01e-05 |
| LPG Production | Ammonia | secondary | 1.79e-04 | 2.01e-05 |
| Fuel Oil #6 Prod. | Benzene | secondary | 1.67e-04 | 1.86e-05 |
| Fuel Oil #2 Prod. | Vanadium | secondary | 1.61e-04 | 1.80e-05 |
| LPG Production | Hydrogen sulfide | secondary | 1.47e-04 | 1.65e-05 |
| Panel components | HCFC-225ca | primary | 1.40e-04 | 1.56e-05 |
| Panel components | HCFC-225cb | primary | 1.40e-04 | 1.56e-05 |
| Fuel Oil #6 Prod. | Nitrogen oxides | secondary | 1.39e-04 | 1.56e-05 |
| US electric grid | Vanadium | model/secondary | 1.35e-04 | 1.51e-05 |
| Fuel Oil #2 Prod. | Methane | secondary | 1.20e-04 | 1.34e-05 |
| Fuel Oil #2 Prod. | Benzene | secondary | 1.19e-04 | 1.33e-05 |
| Japanese Electric Grid | Nickel | model/secondary | 1.18e-04 | 1.32e-05 |
| Fuel Oil #2 Prod. | Sulfur oxides | secondary | 1.14e-04 | 1.27e-05 |
| US electric grid | PM-10 | model/secondary | 1.12e-04 | 1.25e-05 |
| Natural Gas Prod. | Vanadium | secondary | 1.10e-04 | 1.23e-05 |
| Fuel Oil #4 Prod. | Arsenic | secondary | 1.08e-04 | 1.21e-05 |
| Natural Gas Prod. | Hydrochloric acid | secondary | 1.01e-04 | 1.13e-05 |
| Japanese Electric Grid | Barium | model/secondary | 9.88e-05 | 1.10e-05 |
| Monitor/module | Acetic acid | primary | 8.27e-05 | 9.25e-06 |
| Fuel Oil #2 Prod. | Nitrogen oxides | secondary | 8.20e-05 | 9.17e-06 |
| Fuel Oil #4 Prod. | Formaldehyde | secondary | 7.91e-05 | 8.85e-06 |
| LPG Production | Molybdenum | secondary | 7.90e-05 | 8.84e-06 |
| Fuel Oil #4 Prod. | PM | secondary | 6.24e-05 | 6.97e-06 |
| Fuel Oil #6 Prod. | Arsenic | secondary | 5.87e-05 | 6.57e-06 |
| LPG Production | Zinc (elemental) | secondary | 5.75e-05 | 6.44e-06 |
| Japanese Electric Grid | Naphthalene | model/secondary | 5.50e-05 | 6.15e-06 |
| LPG Production | Hydrofluoric acid | secondary | 4.82e-05 | 5.39e-06 |
| Fuel Oil #6 Prod. | Formaldehyde | secondary | 4.66e-05 | 5.21e-06 |
| Natural Gas Prod. | Formaldehyde | secondary | 4.37e-05 | 4.88e-06 |
| Monitor/module | Antimony | primary | 3.88e-05 | 4.34e-06 |
| LPG Production | Ethane | secondary | 3.72e-05 | 4.16e-06 |
| LPG Production | Phenol | secondary | 3.43e-05 | 3.84e-06 |
| Panel components | Hydrochloric acid | primary | 3.35e-05 | 3.75e-06 |
| Panel components | Heptane | primary | 3.28e-05 | 3.66e-06 |
| Fuel Oil #6 Prod. | PM | secondary | 3.15e-05 | 3.52e-06 |
| LPG Production | Pentane | secondary | 3.12e-05 | 3.49e-06 |
| Fuel Oil #2 Prod. | Arsenic | secondary | 3.04e-05 | 3.40e-06 |
| Panel components | PM | primary | 2.74e-05 | 3.07e-06 |
| US electric grid | Hydrofluoric acid | model/secondary | 2.60e-05 | 2.91e-06 |
| Japanese Electric Grid | Copper | model/secondary | 2.40e-05 | 2.69e-06 |
| Monitor/module | Acetone | primary | 2.22e-05 | 2.48e-06 |
| LPG Production | Hexane | secondary | 2.16e-05 | 2.42e-06 |
| Natural Gas Prod. | Fluorides (F-) | secondary | 2.13e-05 | 2.38e-06 |
| Monitor/module | Copper | primary | 2.06e-05 | 2.30e-06 |
| Fuel Oil #2 Prod. | Formaldehyde | secondary | 2.06e-05 | 2.30e-06 |
| Monitor/module | Polychlorinated biphenyls | primary | 1.94e-05 | 2.17e-06 |

## Table M-40. LCD LCIA Results for the Terrestrial Ecotoxicity Impact Category

| Process Group | Material | LCI Data Type | Terrestrial Toxicity (tox-kg) | % of Total |
|---|---|---|---|---|
| Natural Gas Prod. | Selenium | secondary | 1.91e-05 | 2.14e-06 |
| Fuel Oil #4 Prod. | Hydrochloric acid | secondary | 1.90e-05 | 2.12e-06 |
| US electric grid | Formaldehyde | model/secondary | 1.88e-05 | 2.10e-06 |
| Japanese Electric Grid | 2-Chloroacetophenone | model/secondary | 1.85e-05 | 2.07e-06 |
| Fuel Oil #2 Prod. | PM | secondary | 1.85e-05 | 2.07e-06 |
| Japanese Electric Grid | Bromomethane | model/secondary | 1.83e-05 | 2.05e-06 |
| Natural Gas Prod. | Nitrous oxide | secondary | 1.82e-05 | 2.04e-06 |
| LPG Production | Nickel | secondary | 1.39e-05 | 1.56e-06 |
| US electric grid | Benzene | model/secondary | 1.35e-05 | 1.51e-06 |
| Natural Gas Prod. | Zinc (elemental) | secondary | 1.34e-05 | 1.50e-06 |
| Natural Gas Prod. | Ethane | secondary | 1.10e-05 | 1.23e-06 |
| Monitor/module | PM | primary | 1.10e-05 | 1.23e-06 |
| LPG Production | PM-10 | secondary | 1.08e-05 | 1.21e-06 |
| LPG Production | Antimony | secondary | 1.03e-05 | 1.15e-06 |
| Fuel Oil #6 Prod. | Hydrochloric acid | secondary | 1.01e-05 | 1.13e-06 |
| Japanese Electric Grid | Cyanide (-1) | model/secondary | 9.61e-06 | 1.07e-06 |
| Natural Gas Prod. | Pentane | secondary | 9.24e-06 | 1.03e-06 |
| Panel components | Toluene | primary | 9.09e-06 | 1.02e-06 |
| Fuel Oil #4 Prod. | Nitrous oxide | secondary | 8.86e-06 | 9.91e-07 |
| Monitor/module | Chromium | primary | 8.84e-06 | 9.88e-07 |
| US electric grid | Phosphorus (yellow or white) | model/secondary | 7.61e-06 | 8.51e-07 |
| Japanese Electric Grid | 2,3,7,8-TCDD | model/secondary | 7.47e-06 | 8.36e-07 |
| LPG Production | Aluminum (+3) | secondary | 6.79e-06 | 7.60e-07 |
| US electric grid | Nitrous oxide | model/secondary | 6.58e-06 | 7.36e-07 |
| Natural Gas Prod. | Hexane | secondary | 6.40e-06 | 7.15e-07 |
| Monitor/module | Boron | primary | 6.19e-06 | 6.93e-07 |
| Monitor/module | Lead | primary | 6.17e-06 | 6.90e-07 |
| Fuel Oil #4 Prod. | Phosphorus (yellow or white) | secondary | 5.71e-06 | 6.38e-07 |
| Fuel Oil #2 Prod. | Hydrochloric acid | secondary | 5.39e-06 | 6.02e-07 |
| LCD glass mfg. | PM | primary | 5.06e-06 | 5.66e-07 |
| Fuel Oil #6 Prod. | Nitrous oxide | secondary | 4.94e-06 | 5.53e-07 |
| LPG Production | Chromium (VI) | secondary | 4.84e-06 | 5.41e-07 |
| Japanese Electric Grid | Cobalt | model/secondary | 3.98e-06 | 4.45e-07 |
| Fuel Oil #4 Prod. | Selenium | secondary | 3.85e-06 | 4.31e-07 |
| Fuel Oil #4 Prod. | Fluorides (F-) | secondary | 3.79e-06 | 4.24e-07 |
| Monitor/module | Cyanide (-1) | primary | 3.66e-06 | 4.10e-07 |
| Natural Gas Prod. | Molybdenum | secondary | 3.64e-06 | 4.08e-07 |
| US electric grid | Zinc (elemental) | model/secondary | 3.51e-06 | 3.93e-07 |
| Japanese Electric Grid | Carbon disulfide | model/secondary | 3.43e-06 | 3.84e-07 |
| Fuel Oil #6 Prod. | Phosphorus (yellow or white) | secondary | 3.33e-06 | 3.72e-07 |
| LPG Production | Nitrate | secondary | 2.91e-06 | 3.25e-07 |
| US electric grid | Antimony | model/secondary | 2.87e-06 | 3.21e-07 |
| Natural Gas Prod. | Phosphorus (yellow or white) | secondary | 2.79e-06 | 3.12e-07 |
| Natural Gas Prod. | Hydrofluoric acid | secondary | 2.75e-06 | 3.07e-07 |
| Japanese Electric Grid | Benzyl chloride | model/secondary | 2.69e-06 | 3.01e-07 |
| LCD glass mfg. | Carbon monoxide | primary | 2.59e-06 | 2.89e-07 |
| Fuel Oil #2 Prod. | Nitrous oxide | secondary | 2.42e-06 | 2.71e-07 |
| LCD glass mfg. | Sulfur oxides | primary | 2.35e-06 | 2.63e-07 |
| Monitor/module | Cyclohexane | primary | 2.22e-06 | 2.48e-07 |
| Backlight | Diethyl ether | primary | 2.20e-06 | 2.47e-07 |
| Japanese Electric Grid | Chromium (VI) | model/secondary | 2.15e-06 | 2.40e-07 |

## Table M-40. LCD LCIA Results for the Terrestrial Ecotoxicity Impact Category

| Process Group | Material | LCI Data Type | Terrestrial Toxicity (tox-kg) | % of Total |
|---|---|---|---|---|
| Japanese Electric Grid | Chloroform | model/secondary | 2.09e-06 | 2.34e-07 |
| Fuel Oil #6 Prod. | Selenium | secondary | 2.07e-06 | 2.31e-07 |
| LCD glass mfg. | Lead | primary | 2.01e-06 | 2.25e-07 |
| Fuel Oil #6 Prod. | Fluorides (F-) | secondary | 1.99e-06 | 2.22e-07 |
| Fuel Oil #4 Prod. | Hydrogen sulfide | secondary | 1.83e-06 | 2.04e-07 |
| LPG Production | Copper | secondary | 1.67e-06 | 1.87e-07 |
| Fuel Oil #4 Prod. | Ammonia | secondary | 1.58e-06 | 1.76e-07 |
| LPG Production | 2-Chloroacetophenone | secondary | 1.54e-06 | 1.73e-07 |
| LPG Production | Dimethylbenzanthracene | secondary | 1.53e-06 | 1.71e-07 |
| LPG Production | Bromomethane | secondary | 1.53e-06 | 1.71e-07 |
| Fuel Oil #2 Prod. | Phosphorus (yellow or white) | secondary | 1.50e-06 | 1.68e-07 |
| Monitor/module | Hexamethyldisilizane | primary | 1.37e-06 | 1.53e-07 |
| LPG Production | Naphthalene | secondary | 1.24e-06 | 1.38e-07 |
| Japanese Electric Grid | Acrolein | model/secondary | 1.11e-06 | 1.25e-07 |
| Fuel Oil #2 Prod. | Fluorides (F-) | secondary | 1.09e-06 | 1.22e-07 |
| Monitor/module | Chromium (VI) | primary | 1.09e-06 | 1.22e-07 |
| Fuel Oil #2 Prod. | Selenium | secondary | 1.09e-06 | 1.22e-07 |
| Fuel Oil #6 Prod. | Hydrogen sulfide | secondary | 1.08e-06 | 1.21e-07 |
| LPG Production | Manganese | secondary | 1.07e-06 | 1.20e-07 |
| US electric grid | Molybdenum | model/secondary | 9.61e-07 | 1.07e-07 |
| Fuel Oil #4 Prod. | Molybdenum | secondary | 9.29e-07 | 1.04e-07 |
| Monitor/module | Diethylene glycol | primary | 9.23e-07 | 1.03e-07 |
| Japanese Electric Grid | Methyl chloride | model/secondary | 9.03e-07 | 1.01e-07 |
| LPG Production | Barium | secondary | 8.94e-07 | 1.00e-07 |
| US electric grid | 2-Chloroacetophenone | model/secondary | 8.35e-07 | 9.34e-08 |
| US electric grid | Bromomethane | model/secondary | 8.27e-07 | 9.24e-08 |
| LPG Production | Silicon | secondary | 8.12e-07 | 9.08e-08 |
| Japanese Electric Grid | Toluene | model/secondary | 8.04e-07 | 8.99e-08 |
| LPG Production | Cyanide (-1) | secondary | 8.03e-07 | 8.98e-08 |
| LPG Production | Barium cmpds | secondary | 7.62e-07 | 8.52e-08 |
| Natural Gas Prod. | Antimony | secondary | 7.01e-07 | 7.84e-08 |
| Fuel Oil #6 Prod. | Ammonia | secondary | 6.85e-07 | 7.66e-08 |
| Japanese Electric Grid | Methyl hydrazine | model/secondary | 6.54e-07 | 7.31e-08 |
| LPG Production | Lead | secondary | 5.93e-07 | 6.63e-08 |
| Monitor/module | Nickel | primary | 5.45e-07 | 6.10e-08 |
| Fuel Oil #6 Prod. | Molybdenum | secondary | 5.30e-07 | 5.93e-08 |
| Fuel Oil #4 Prod. | Hydrofluoric acid | secondary | 5.17e-07 | 5.79e-08 |
| Fuel Oil #2 Prod. | Ammonia | secondary | 5.14e-07 | 5.75e-08 |
| Fuel Oil #4 Prod. | Zinc (elemental) | secondary | 5.10e-07 | 5.71e-08 |
| Japanese Electric Grid | Acetaldehyde | model/secondary | 5.02e-07 | 5.61e-08 |
| Japanese Electric Grid | Propionaldehyde | model/secondary | 5.02e-07 | 5.61e-08 |
| Japanese Electric Grid | Cadmium | model/secondary | 4.74e-07 | 5.30e-08 |
| Fuel Oil #2 Prod. | Hydrogen sulfide | secondary | 4.72e-07 | 5.28e-08 |
| Monitor/module | Tin | primary | 4.58e-07 | 5.12e-08 |
| Natural Gas Prod. | Dimethylbenzanthracene | secondary | 4.53e-07 | 5.07e-08 |
| US electric grid | Cyanide (-1) | model/secondary | 4.34e-07 | 4.85e-08 |
| Japanese Electric Grid | Mercury | model/secondary | 3.97e-07 | 4.44e-08 |
| Japanese Electric Grid | Di(2-ethylhexyl)phthalate | model/secondary | 3.86e-07 | 4.31e-08 |
| Fuel Oil #4 Prod. | Ethane | secondary | 3.36e-07 | 3.76e-08 |

## Table M-40. LCD LCIA Results for the Terrestrial Ecotoxicity Impact Category

| Process Group | Material | LCI Data Type | Terrestrial Toxicity (tox-kg) | % of Total |
|---|---|---|---|---|
| US electric grid | 2,3,7,8-TCDD | model/secondary | 3.28e-07 | 3.67e-08 |
| US electric grid | Nickel | model/secondary | 3.16e-07 | 3.53e-08 |
| LPG Production | Carbon disulfide | secondary | 2.87e-07 | 3.21e-08 |
| Fuel Oil #4 Prod. | Pentane | secondary | 2.82e-07 | 3.15e-08 |
| Fuel Oil #6 Prod. | Hydrofluoric acid | secondary | 2.76e-07 | 3.08e-08 |
| US electric grid | Naphthalene | model/secondary | 2.62e-07 | 2.92e-08 |
| Japanese Electric Grid | Hexane | model/secondary | 2.58e-07 | 2.88e-08 |
| Fuel Oil #4 Prod. | Phenol | secondary | 2.51e-07 | 2.81e-08 |
| Fuel Oil #2 Prod. | Molybdenum | secondary | 2.49e-07 | 2.78e-08 |
| Monitor/module | Manganese | primary | 2.29e-07 | 2.56e-08 |
| US electric grid | Barium | model/secondary | 2.25e-07 | 2.52e-08 |
| LPG Production | Benzyl chloride | secondary | 2.25e-07 | 2.51e-08 |
| Fuel Oil #6 Prod. | Zinc (elemental) | secondary | 2.25e-07 | 2.51e-08 |
| Natural Gas Prod. | Naphthalene | secondary | 2.05e-07 | 2.29e-08 |
| Fuel Oil #4 Prod. | Hexane | secondary | 1.95e-07 | 2.18e-08 |
| Natural Gas Prod. | Nickel | secondary | 1.94e-07 | 2.17e-08 |
| LPG Production | Aluminum (elemental) | secondary | 1.86e-07 | 2.08e-08 |
| Japanese Electric Grid | Dimethyl sulfate | model/secondary | 1.85e-07 | 2.06e-08 |
| LCD glass mfg. | Nitrate | primary | 1.83e-07 | 2.05e-08 |
| Japanese Electric Grid | Isophorone | model/secondary | 1.77e-07 | 1.98e-08 |
| LPG Production | Chloroform | secondary | 1.75e-07 | 1.95e-08 |
| Fuel Oil #4 Prod. | Nickel | secondary | 1.66e-07 | 1.86e-08 |
| Fuel Oil #2 Prod. | Zinc (elemental) | secondary | 1.65e-07 | 1.85e-08 |
| US electric grid | Carbon disulfide | model/secondary | 1.55e-07 | 1.73e-08 |
| Fuel Oil #6 Prod. | Ethane | secondary | 1.51e-07 | 1.69e-08 |
| Natural Gas Prod. | Chromium (VI) | secondary | 1.49e-07 | 1.67e-08 |
| Fuel Oil #2 Prod. | Hydrofluoric acid | secondary | 1.47e-07 | 1.64e-08 |
| Japanese Electric Grid | Methyl ethyl ketone | model/secondary | 1.43e-07 | 1.60e-08 |
| Japanese Electric Grid | Tetrachloroethylene | model/secondary | 1.41e-07 | 1.57e-08 |
| Fuel Oil #4 Prod. | PM-10 | secondary | 1.34e-07 | 1.50e-08 |
| Fuel Oil #6 Prod. | Pentane | secondary | 1.27e-07 | 1.42e-08 |
| Japanese Electric Grid | Methyl methacrylate | model/secondary | 1.22e-07 | 1.36e-08 |
| US electric grid | Benzyl chloride | model/secondary | 1.22e-07 | 1.36e-08 |
| LPG Production | Cobalt | secondary | 1.21e-07 | 1.35e-08 |
| Monitor/module | Cadmium | primary | 1.14e-07 | 1.28e-08 |
| Japanese Electric Grid | Beryllium | model/secondary | 1.09e-07 | 1.22e-08 |
| Fuel Oil #2 Prod. | Ethane | secondary | 1.08e-07 | 1.20e-08 |
| Natural Gas Prod. | Hydrogen sulfide | secondary | 1.06e-07 | 1.19e-08 |
| Japanese Electric Grid | 1,2-Dichloroethane | model/secondary | 1.02e-07 | 1.14e-08 |
| Japanese Electric Grid | Bromoform | model/secondary | 9.97e-08 | 1.11e-08 |
| Monitor/module | Mercury | primary | 9.69e-08 | 1.08e-08 |
| Japanese Electric Grid | Dichloromethane | model/secondary | 9.62e-08 | 1.08e-08 |
| Fuel Oil #6 Prod. | Nickel | secondary | 9.56e-08 | 1.07e-08 |
| US electric grid | Chloroform | model/secondary | 9.45e-08 | 1.06e-08 |
| Fuel Oil #2 Prod. | Phenol | secondary | 9.37e-08 | 1.05e-08 |
| LPG Production | Acrolein | secondary | 9.31e-08 | 1.04e-08 |
| Natural Gas Prod. | Barium | secondary | 9.30e-08 | 1.04e-08 |
| Fuel Oil #4 Prod. | Antimony | secondary | 9.13e-08 | 1.02e-08 |
| Fuel Oil #2 Prod. | Pentane | secondary | 9.02e-08 | 1.01e-08 |
| US electric grid | Manganese | model/secondary | 8.83e-08 | 9.87e-09 |
| Natural Gas Prod. | 2-Chloroacetophenone | secondary | 8.80e-08 | 9.84e-09 |

## Table M-40. LCD LCIA Results for the Terrestrial Ecotoxicity Impact Category

| Process Group | Material | LCI Data Type | Terrestrial Toxicity (tox-kg) | % of Total |
|---|---|---|---|---|
| Fuel Oil #6 Prod. | Hexane | secondary | 8.78e-08 | 9.82e-09 |
| Natural Gas Prod. | Bromomethane | secondary | 8.71e-08 | 9.74e-09 |
| Natural Gas Prod. | Copper | secondary | 8.32e-08 | 9.31e-09 |
| Fuel Oil #6 Prod. | Phenol | secondary | 8.24e-08 | 9.21e-09 |
| Japanese Electric Grid | Chlorobenzene | model/secondary | 8.05e-08 | 9.01e-09 |
| Fuel Oil #6 Prod. | PM-10 | secondary | 7.94e-08 | 8.88e-09 |
| LPG Production | Methyl chloride | secondary | 7.54e-08 | 8.43e-09 |
| Panel components | Methyl ethyl ketone | primary | 6.97e-08 | 7.79e-09 |
| LPG Production | Beryllium | secondary | 6.74e-08 | 7.54e-09 |
| US electric grid | Chromium (VI) | model/secondary | 6.65e-08 | 7.44e-09 |
| Japanese Electric Grid | 2,4-Dinitrotoluene | model/secondary | 6.39e-08 | 7.14e-09 |
| Fuel Oil #2 Prod. | Hexane | secondary | 6.25e-08 | 6.99e-09 |
| Natural Gas Prod. | Manganese | secondary | 6.23e-08 | 6.97e-09 |
| LPG Production | Methyl hydrazine | secondary | 5.46e-08 | 6.10e-09 |
| US electric grid | Acrolein | model/secondary | 5.04e-08 | 5.63e-09 |
| Fuel Oil #4 Prod. | Aluminum (+3) | secondary | 4.98e-08 | 5.57e-09 |
| Natural Gas Prod. | Cyanide (-1) | secondary | 4.57e-08 | 5.12e-09 |
| Monitor/module | Phenol | primary | 4.54e-08 | 5.08e-09 |
| Japanese Electric Grid | Cumene hydroperoxide | model/secondary | 4.51e-08 | 5.05e-09 |
| Fuel Oil #2 Prod. | Nickel | secondary | 4.40e-08 | 4.93e-09 |
| US electric grid | Copper | model/secondary | 4.33e-08 | 4.84e-09 |
| LPG Production | Acetaldehyde | secondary | 4.19e-08 | 4.69e-09 |
| LPG Production | Propionaldehyde | secondary | 4.19e-08 | 4.69e-09 |
| LPG Production | Mercury | secondary | 4.17e-08 | 4.66e-09 |
| US electric grid | Methyl chloride | model/secondary | 4.08e-08 | 4.56e-09 |
| Fuel Oil #6 Prod. | Antimony | secondary | 4.03e-08 | 4.51e-09 |
| LPG Production | Cadmium | secondary | 3.89e-08 | 4.35e-09 |
| US electric grid | Fluoride | model/secondary | 3.78e-08 | 4.23e-09 |
| Japanese Electric Grid | Ethylbenzene | model/secondary | 3.49e-08 | 3.91e-09 |
| Fuel Oil #2 Prod. | PM-10 | secondary | 3.47e-08 | 3.88e-09 |
| Natural Gas Prod. | Lead | secondary | 3.42e-08 | 3.82e-09 |
| LPG Production | Cadmium cmpds | secondary | 3.33e-08 | 3.73e-09 |
| LPG Production | Di(2-ethylhexyl)phthalate | secondary | 3.22e-08 | 3.60e-09 |
| LPG Production | Toluene | secondary | 2.99e-08 | 3.34e-09 |
| US electric grid | Methyl hydrazine | model/secondary | 2.95e-08 | 3.30e-09 |
| Fuel Oil #2 Prod. | Antimony | secondary | 2.95e-08 | 3.30e-09 |
| Fuel Oil #4 Prod. | Chromium (VI) | secondary | 2.60e-08 | 2.91e-09 |
| US electric grid | Lead | model/secondary | 2.47e-08 | 2.76e-09 |
| Natural Gas Prod. | Nitrate | secondary | 2.37e-08 | 2.65e-09 |
| US electric grid | Cobalt | model/secondary | 2.35e-08 | 2.63e-09 |
| Natural Gas Prod. | Phenol | secondary | 2.30e-08 | 2.57e-09 |
| US electric grid | Propionaldehyde | model/secondary | 2.27e-08 | 2.53e-09 |
| US electric grid | Acetaldehyde | model/secondary | 2.27e-08 | 2.53e-09 |
| Fuel Oil #4 Prod. | Nitrate | secondary | 2.26e-08 | 2.53e-09 |
| Monitor/module | Tetrachloroethylene | primary | 1.95e-08 | 2.18e-09 |
| Fuel Oil #4 Prod. | Copper | secondary | 1.92e-08 | 2.15e-09 |
| Fuel Oil #2 Prod. | Aluminum (+3) | secondary | 1.85e-08 | 2.07e-09 |
| Japanese Electric Grid | Phenanthrene | model/secondary | 1.75e-08 | 1.96e-09 |
| US electric grid | Di(2-ethylhexyl)phthalate | model/secondary | 1.74e-08 | 1.95e-09 |

## Table M-40. LCD LCIA Results for the Terrestrial Ecotoxicity Impact Category

| Process Group | Material | LCI Data Type | Terrestrial Toxicity (tox-kg) | % of Total |
|---|---|---|---|---|
| LPG Production | 1,4-Dichlorobenzene | secondary | 1.71e-08 | 1.92e-09 |
| Fuel Oil #4 Prod. | 2-Chloroacetophenone | secondary | 1.66e-08 | 1.85e-09 |
| Fuel Oil #4 Prod. | Bromomethane | secondary | 1.64e-08 | 1.84e-09 |
| Natural Gas Prod. | Carbon disulfide | secondary | 1.63e-08 | 1.83e-09 |
| Fuel Oil #6 Prod. | Aluminum (+3) | secondary | 1.63e-08 | 1.82e-09 |
| Japanese Electric Grid | Methyl tert-butyl ether | model/secondary | 1.60e-08 | 1.79e-09 |
| LPG Production | Dimethyl sulfate | secondary | 1.54e-08 | 1.72e-09 |
| Japanese Electric Grid | Chromium (III) | model/secondary | 1.51e-08 | 1.68e-09 |
| LPG Production | Isophorone | secondary | 1.48e-08 | 1.65e-09 |
| US electric grid | Mercury | model/secondary | 1.45e-08 | 1.63e-09 |
| Fuel Oil #6 Prod. | Chromium (VI) | secondary | 1.39e-08 | 1.56e-09 |
| Fuel Oil #4 Prod. | Dimethylbenzanthracene | secondary | 1.38e-08 | 1.55e-09 |
| Natural Gas Prod. | Toluene | secondary | 1.36e-08 | 1.52e-09 |
| Natural Gas Prod. | Benzyl chloride | secondary | 1.28e-08 | 1.43e-09 |
| Japanese Electric Grid | 1,1,1-Trichloroethane | model/secondary | 1.23e-08 | 1.37e-09 |
| Japanese Electric Grid | Phenol | model/secondary | 1.22e-08 | 1.36e-09 |
| LPG Production | Methyl ethyl ketone | secondary | 1.19e-08 | 1.33e-09 |
| LPG Production | Tetrachloroethylene | secondary | 1.17e-08 | 1.31e-09 |
| Japanese Electric Grid | Styrene | model/secondary | 1.17e-08 | 1.31e-09 |
| US electric grid | Hexane | model/secondary | 1.16e-08 | 1.30e-09 |
| Fuel Oil #4 Prod. | Naphthalene | secondary | 1.15e-08 | 1.28e-09 |
| Fuel Oil #4 Prod. | Manganese | secondary | 1.15e-08 | 1.28e-09 |
| Japanese Electric Grid | Vinyl acetate | model/secondary | 1.14e-08 | 1.27e-09 |
| Monitor/module | Trichloroethylene | primary | 1.14e-08 | 1.27e-09 |
| Fuel Oil #6 Prod. | Copper | secondary | 1.08e-08 | 1.21e-09 |
| LCD glass mfg. | Chromium | primary | 1.02e-08 | 1.14e-09 |
| LPG Production | Methyl methacrylate | secondary | 1.02e-08 | 1.14e-09 |
| Fuel Oil #4 Prod. | Silicon | secondary | 1.01e-08 | 1.13e-09 |
| Natural Gas Prod. | Chloroform | secondary | 9.96e-09 | 1.11e-09 |
| Japanese Electric Grid | Xylene (mixed isomers) | model/secondary | 9.46e-09 | 1.06e-09 |
| US electric grid | Cadmium | model/secondary | 9.33e-09 | 1.04e-09 |
| LCD glass mfg. | Nickel | primary | 9.05e-09 | 1.01e-09 |
| Fuel Oil #6 Prod. | 2-Chloroacetophenone | secondary | 8.84e-09 | 9.89e-10 |
| Fuel Oil #6 Prod. | Bromomethane | secondary | 8.75e-09 | 9.79e-10 |
| Fuel Oil #4 Prod. | Cyanide (-1) | secondary | 8.62e-09 | 9.64e-10 |
| LPG Production | 1,2-Dichloroethane | secondary | 8.49e-09 | 9.50e-10 |
| US electric grid | Dimethyl sulfate | model/secondary | 8.33e-09 | 9.32e-10 |
| LPG Production | Bromoform | secondary | 8.32e-09 | 9.31e-10 |
| Fuel Oil #6 Prod. | Nitrate | secondary | 8.26e-09 | 9.24e-10 |
| LPG Production | Chromium (III) | secondary | 8.24e-09 | 9.21e-10 |
| US electric grid | Toluene | model/secondary | 8.23e-09 | 9.20e-10 |
| Fuel Oil #2 Prod. | Nitrate | secondary | 8.06e-09 | 9.01e-10 |
| LPG Production | Dichloromethane | secondary | 8.04e-09 | 8.99e-10 |
| US electric grid | Isophorone | model/secondary | 7.99e-09 | 8.94e-10 |
| Fuel Oil #4 Prod. | Barium | secondary | 7.83e-09 | 8.76e-10 |
| Natural Gas Prod. | PM-10 | secondary | 7.79e-09 | 8.71e-10 |
| Fuel Oil #2 Prod. | Chromium (VI) | secondary | 7.39e-09 | 8.26e-10 |
| Natural Gas Prod. | o-xylene | secondary | 7.25e-09 | 8.11e-10 |
| LPG Production | Chlorobenzene | secondary | 6.72e-09 | 7.52e-10 |
| LPG Production | Aromatic hydrocarbons | secondary | 6.72e-09 | 7.51e-10 |
| US electric grid | Methyl ethyl ketone | model/secondary | 6.45e-09 | 7.21e-10 |

# Table M-40. LCD LCIA Results for the Terrestrial Ecotoxicity Impact Category

| Process Group | Material | LCI Data Type | Terrestrial Toxicity (tox-kg) | % of Total |
|---|---|---|---|---|
| Fuel Oil #4 Prod. | Lead | secondary | 6.38e-09 | 7.13e-10 |
| US electric grid | Tetrachloroethylene | model/secondary | 6.35e-09 | 7.10e-10 |
| LPG Production | Copper (+1 & +2) | secondary | 6.29e-09 | 7.03e-10 |
| Fuel Oil #6 Prod. | Dimethylbenzanthracene | secondary | 6.21e-09 | 6.95e-10 |
| Fuel Oil #6 Prod. | Manganese | secondary | 6.09e-09 | 6.81e-10 |
| Fuel Oil #6 Prod. | Silicon | secondary | 5.97e-09 | 6.67e-10 |
| Fuel Oil #4 Prod. | Barium cmpds | secondary | 5.58e-09 | 6.24e-10 |
| US electric grid | Methyl methacrylate | model/secondary | 5.51e-09 | 6.16e-10 |
| LPG Production | 2,4-Dinitrotoluene | secondary | 5.35e-09 | 5.98e-10 |
| Fuel Oil #6 Prod. | Naphthalene | secondary | 5.32e-09 | 5.95e-10 |
| Natural Gas Prod. | Acrolein | secondary | 5.31e-09 | 5.93e-10 |
| Fuel Oil #2 Prod. | Copper | secondary | 5.22e-09 | 5.84e-10 |
| Natural Gas Prod. | 1,4-Dichlorobenzene | secondary | 5.07e-09 | 5.67e-10 |
| Japanese Electric Grid | Acenaphthene | model/secondary | 4.94e-09 | 5.52e-10 |
| Fuel Oil #2 Prod. | 2-Chloroacetophenone | secondary | 4.71e-09 | 5.27e-10 |
| Fuel Oil #2 Prod. | Bromomethane | secondary | 4.66e-09 | 5.22e-10 |
| Japanese Electric Grid | Ethylene dibromide | model/secondary | 4.61e-09 | 5.16e-10 |
| Fuel Oil #6 Prod. | Cyanide (-1) | secondary | 4.60e-09 | 5.14e-10 |
| US electric grid | 1,2-Dichloroethane | model/secondary | 4.59e-09 | 5.14e-10 |
| Natural Gas Prod. | Aluminum (+3) | secondary | 4.51e-09 | 5.05e-10 |
| US electric grid | Bromoform | model/secondary | 4.50e-09 | 5.04e-10 |
| Fuel Oil #2 Prod. | Dimethylbenzanthracene | secondary | 4.43e-09 | 4.95e-10 |
| Natural Gas Prod. | Beryllium | secondary | 4.41e-09 | 4.93e-10 |
| US electric grid | Dichloromethane | model/secondary | 4.35e-09 | 4.86e-10 |
| Japanese Electric Grid | o-xylene | model/secondary | 4.31e-09 | 4.83e-10 |
| Natural Gas Prod. | Methyl chloride | secondary | 4.30e-09 | 4.81e-10 |
| Natural Gas Prod. | Cobalt | secondary | 4.16e-09 | 4.66e-10 |
| US electric grid | Beryllium | model/secondary | 3.69e-09 | 4.13e-10 |
| US electric grid | Chlorobenzene | model/secondary | 3.64e-09 | 4.07e-10 |
| Fuel Oil #2 Prod. | Naphthalene | secondary | 3.60e-09 | 4.03e-10 |
| Fuel Oil #6 Prod. | Lead | secondary | 3.40e-09 | 3.81e-10 |
| Fuel Oil #6 Prod. | Barium | secondary | 3.39e-09 | 3.80e-10 |
| LPG Production | o-xylene | secondary | 3.29e-09 | 3.68e-10 |
| Fuel Oil #2 Prod. | Manganese | secondary | 3.26e-09 | 3.65e-10 |
| Natural Gas Prod. | Methyl hydrazine | secondary | 3.11e-09 | 3.48e-10 |
| Japanese Electric Grid | Ethyl Chloride | model/secondary | 3.08e-09 | 3.45e-10 |
| Fuel Oil #4 Prod. | Carbon disulfide | secondary | 3.08e-09 | 3.44e-10 |
| Natural Gas Prod. | Mercury | secondary | 2.97e-09 | 3.32e-10 |
| US electric grid | 2,4-Dinitrotoluene | model/secondary | 2.89e-09 | 3.24e-10 |
| Japanese Electric Grid | Benzo[a]anthracene | model/secondary | 2.69e-09 | 3.01e-10 |
| LPG Production | Ethylbenzene | secondary | 2.67e-09 | 2.98e-10 |
| Fuel Oil #2 Prod. | Silicon | secondary | 2.60e-09 | 2.91e-10 |
| Fuel Oil #2 Prod. | Barium | secondary | 2.56e-09 | 2.87e-10 |
| Fuel Oil #2 Prod. | Cyanide (-1) | secondary | 2.45e-09 | 2.74e-10 |
| Fuel Oil #4 Prod. | Benzyl chloride | secondary | 2.41e-09 | 2.70e-10 |
| Natural Gas Prod. | Acetaldehyde | secondary | 2.39e-09 | 2.67e-10 |
| Natural Gas Prod. | Propionaldehyde | secondary | 2.39e-09 | 2.67e-10 |
| Fuel Oil #4 Prod. | Aluminum (elemental) | secondary | 2.31e-09 | 2.58e-10 |
| Natural Gas Prod. | Cadmium | secondary | 2.21e-09 | 2.47e-10 |

## Table M-40. LCD LCIA Results for the Terrestrial Ecotoxicity Impact Category

| Process Group | Material | LCI Data Type | Terrestrial Toxicity (tox-kg) | % of Total |
|---|---|---|---|---|
| Fuel Oil #2 Prod. | Barium cmpds | secondary | 2.08e-09 | 2.32e-10 |
| Fuel Oil #4 Prod. | Chloroform | secondary | 1.88e-09 | 2.10e-10 |
| Natural Gas Prod. | Di(2-ethylhexyl)phthalate | secondary | 1.84e-09 | 2.05e-10 |
| Fuel Oil #6 Prod. | Barium cmpds | secondary | 1.83e-09 | 2.04e-10 |
| Fuel Oil #2 Prod. | Lead | secondary | 1.81e-09 | 2.02e-10 |
| Japanese Electric Grid | Chrysene | model/secondary | 1.80e-09 | 2.01e-10 |
| Fuel Oil #6 Prod. | Carbon disulfide | secondary | 1.64e-09 | 1.84e-10 |
| Japanese Electric Grid | Acetophenone | model/secondary | 1.62e-09 | 1.81e-10 |
| Japanese Electric Grid | Biphenyl | model/secondary | 1.56e-09 | 1.74e-10 |
| Japanese Electric Grid | Indeno(1,2,3-cd)pyrene | model/secondary | 1.51e-09 | 1.68e-10 |
| Japanese Electric Grid | Benzo[g,h,i]perylene | model/secondary | 1.45e-09 | 1.62e-10 |
| US electric grid | Ethylbenzene | model/secondary | 1.43e-09 | 1.60e-10 |
| Fuel Oil #6 Prod. | Aluminum (elemental) | secondary | 1.37e-09 | 1.53e-10 |
| LPG Production | Methyl tert-butyl ether | secondary | 1.34e-09 | 1.50e-10 |
| Fuel Oil #4 Prod. | Cobalt | secondary | 1.33e-09 | 1.49e-10 |
| Japanese Electric Grid | Benzo[b,j,k]fluoranthene | model/secondary | 1.31e-09 | 1.46e-10 |
| Monitor/module | 1,1,1-Trichloroethane | primary | 1.30e-09 | 1.45e-10 |
| Fuel Oil #6 Prod. | Benzyl chloride | secondary | 1.29e-09 | 1.44e-10 |
| Japanese Electric Grid | Acenaphthylene | model/secondary | 1.11e-09 | 1.24e-10 |
| LPG Production | Phenanthrene | secondary | 1.09e-09 | 1.22e-10 |
| Fuel Oil #6 Prod. | Chloroform | secondary | 1.00e-09 | 1.12e-10 |
| Fuel Oil #4 Prod. | Acroleln | secondary | 1.00e-09 | 1.12e-10 |
| Japanese Electric Grid | Dibenzo[a,h]anthracene | model/secondary | 9.95e-10 | 1.11e-10 |
| LPG Production | Styrene | secondary | 9.76e-10 | 1.09e-10 |
| LPG Production | Vinyl acetate | secondary | 9.52e-10 | 1.07e-10 |
| LPG Production | 3-Methylcholanthrene | secondary | 8.99e-10 | 1.01e-10 |
| Natural Gas Prod. | Dimethyl sulfate | secondary | 8.78e-10 | 9.82e-11 |
| Fuel Oil #2 Prod. | Carbon disulfide | secondary | 8.75e-10 | 9.79e-11 |
| Natural Gas Prod. | Isophorone | secondary | 8.42e-10 | 9.42e-11 |
| Natural Gas Prod. | Zinc (+2) | secondary | 8.26e-10 | 9.24e-11 |
| Fuel Oil #4 Prod. | Methyl chloride | secondary | 8.10e-10 | 9.06e-11 |
| Japanese Electric Grid | 2-Methylnaphthalene | model/secondary | 8.00e-10 | 8.94e-11 |
| Natural Gas Prod. | Chlorine | secondary | 7.46e-10 | 8.34e-11 |
| US electric grid | Methyl tert-butyl ether | model/secondary | 7.23e-10 | 8.09e-11 |
| Fuel Oil #6 Prod. | Cobalt | secondary | 7.23e-10 | 8.08e-11 |
| Fuel Oil #4 Prod. | Beryllium | secondary | 7.19e-10 | 8.04e-11 |
| Fuel Oil #2 Prod. | Benzyl chloride | secondary | 6.86e-10 | 7.67e-11 |
| Natural Gas Prod. | Methyl ethyl ketone | secondary | 6.79e-10 | 7.60e-11 |
| Japanese Electric Grid | Pyrene | model/secondary | 6.73e-10 | 7.52e-11 |
| Natural Gas Prod. | Tetrachloroethylene | secondary | 6.69e-10 | 7.48e-11 |
| Fuel Oil #2 Prod. | Aluminum (elemental) | secondary | 5.96e-10 | 6.67e-11 |
| Fuel Oil #4 Prod. | Methyl hydrazine | secondary | 5.86e-10 | 6.56e-11 |
| Japanese Electric Grid | Fluorene | model/secondary | 5.86e-10 | 6.55e-11 |
| Natural Gas Prod. | Silicon | secondary | 5.85e-10 | 6.55e-11 |
| Natural Gas Prod. | Methyl methacrylate | secondary | 5.81e-10 | 6.49e-11 |
| LPG Production | Zinc (+2) | secondary | 5.63e-10 | 6.30e-11 |
| Japanese Electric Grid | Fluoranthene | model/secondary | 5.59e-10 | 6.26e-11 |
| US electric grid | Phenol | model/secondary | 5.51e-10 | 6.16e-11 |
| Fuel Oil #2 Prod. | Chloroform | secondary | 5.33e-10 | 5.96e-11 |
| Fuel Oil #6 Prod. | Acrolein | secondary | 5.33e-10 | 5.96e-11 |
| US electric grid | Styrene | model/secondary | 5.28e-10 | 5.90e-11 |

## Table M-40. LCD LCIA Results for the Terrestrial Ecotoxicity Impact Category

| Process Group | Material | LCI Data Type | Terrestrial Toxicity (tox-kg) | % of Total |
|---|---|---|---|---|
| US electric grid | Vinyl acetate | model/secondary | 5.15e-10 | 5.76e-11 |
| Natural Gas Prod. | Barium cmpds | secondary | 5.06e-10 | 5.66e-11 |
| US electric grid | Phenanthrene | model/secondary | 4.85e-10 | 5.43e-11 |
| Natural Gas Prod. | 1,2-Dichloroethane | secondary | 4.84e-10 | 5.41e-11 |
| Natural Gas Prod. | Bromoform | secondary | 4.74e-10 | 5.31e-11 |
| Natural Gas Prod. | Dichloromethane | secondary | 4.58e-10 | 5.12e-11 |
| Fuel Oil #4 Prod. | Acetaldehyde | secondary | 4.50e-10 | 5.03e-11 |
| Fuel Oil #4 Prod. | Propionaldehyde | secondary | 4.50e-10 | 5.03e-11 |
| Fuel Oil #4 Prod. | Mercury | secondary | 4.46e-10 | 4.98e-11 |
| Fuel Oil #6 Prod. | Methyl chloride | secondary | 4.32e-10 | 4.83e-11 |
| US electric grid | Xylene (mixed isomers) | model/secondary | 4.27e-10 | 4.78e-11 |
| Fuel Oil #4 Prod. | Cadmium | secondary | 4.12e-10 | 4.60e-11 |
| LPG Production | Ethylene dibromide | secondary | 3.85e-10 | 4.31e-11 |
| Natural Gas Prod. | Chlorobenzene | secondary | 3.83e-10 | 4.29e-11 |
| US electric grid | Chromium (III) | model/secondary | 3.82e-10 | 4.27e-11 |
| Fuel Oil #6 Prod. | Beryllium | secondary | 3.81e-10 | 4.26e-11 |
| Fuel Oil #2 Prod. | Cobalt | secondary | 3.71e-10 | 4.15e-11 |
| LPG Production | 1,1,1-Trichloroethane | secondary | 3.63e-10 | 4.06e-11 |
| Fuel Oil #4 Prod. | Di(2-ethylhexyl)phthalate | secondary | 3.46e-10 | 3.87e-11 |
| Fuel Oil #6 Prod. | Methyl hydrazine | secondary | 3.12e-10 | 3.49e-11 |
| Natural Gas Prod. | 2,4-Dinitrotoluene | secondary | 3.05e-10 | 3.41e-11 |
| Fuel Oil #4 Prod. | Toluene | secondary | 2.92e-10 | 3.27e-11 |
| LPG Production | 2-Methylnaphthalene | secondary | 2.88e-10 | 3.22e-11 |
| Fuel Oil #2 Prod. | Acrolein | secondary | 2.84e-10 | 3.18e-11 |
| Natural Gas Prod. | 3-Methylcholanthrene | secondary | 2.66e-10 | 2.98e-11 |
| LPG Production | Ethyl Chloride | secondary | 2.57e-10 | 2.88e-11 |
| LPG Production | Chlorine | secondary | 2.55e-10 | 2.86e-11 |
| Natural Gas Prod. | Chromium (III) | secondary | 2.54e-10 | 2.84e-11 |
| Fuel Oil #4 Prod. | Cadmium cmpds | secondary | 2.44e-10 | 2.73e-11 |
| Fuel Oil #6 Prod. | Acetaldehyde | secondary | 2.40e-10 | 2.68e-11 |
| Fuel Oil #6 Prod. | Propionaldehyde | secondary | 2.40e-10 | 2.68e-11 |
| Fuel Oil #6 Prod. | Mercury | secondary | 2.36e-10 | 2.64e-11 |
| Fuel Oil #2 Prod. | Methyl chloride | secondary | 2.30e-10 | 2.57e-11 |
| LPG Production | Cumene | secondary | 2.18e-10 | 2.43e-11 |
| Fuel Oil #6 Prod. | Cadmium | secondary | 2.17e-10 | 2.42e-11 |
| US electric grid | 1,1,1-Trichloroethane | model/secondary | 2.10e-10 | 2.35e-11 |
| US electric grid | Ethylene dibromide | model/secondary | 2.08e-10 | 2.33e-11 |
| Fuel Oil #2 Prod. | Beryllium | secondary | 2.05e-10 | 2.29e-11 |
| Fuel Oil #6 Prod. | Di(2-ethylhexyl)phthalate | secondary | 1.84e-10 | 2.06e-11 |
| Fuel Oil #2 Prod. | Methyl hydrazine | secondary | 1.67e-10 | 1.86e-11 |
| Fuel Oil #4 Prod. | Dimethyl sulfate | secondary | 1.66e-10 | 1.85e-11 |
| Fuel Oil #4 Prod. | Isophorone | secondary | 1.59e-10 | 1.77e-11 |
| Fuel Oil #4 Prod. | 1,4-Dichlorobenzene | secondary | 1.55e-10 | 1.73e-11 |
| Natural Gas Prod. | Ethylbenzene | secondary | 1.52e-10 | 1.70e-11 |
| Japanese Electric Grid | Benzo[a]pyrene | model/secondary | 1.46e-10 | 1.64e-11 |
| Fuel Oil #6 Prod. | Toluene | secondary | 1.43e-10 | 1.60e-11 |
| US electric grid | Ethyl Chloride | model/secondary | 1.39e-10 | 1.56e-11 |
| LPG Production | Acetophenone | secondary | 1.35e-10 | 1.52e-11 |
| Natural Gas Prod. | Aluminum (elemental) | secondary | 1.34e-10 | 1.50e-11 |

## Table M-40. LCD LCIA Results for the Terrestrial Ecotoxicity Impact Category

| Process Group | Material | LCI Data Type | Terrestrial Toxicity (tox-kg) | % of Total |
|---|---|---|---|---|
| LPG Production | Biphenyl | secondary | 1.30e-10 | 1.45e-11 |
| Fuel Oil #4 Prod. | Methyl ethyl ketone | secondary | 1.28e-10 | 1.43e-11 |
| Fuel Oil #2 Prod. | Acetaldehyde | secondary | 1.28e-10 | 1.43e-11 |
| Fuel Oil #2 Prod. | Propionaldehyde | secondary | 1.28e-10 | 1.43e-11 |
| Fuel Oil #2 Prod. | Mercury | secondary | 1.27e-10 | 1.42e-11 |
| Fuel Oil #4 Prod. | Tetrachloroethylene | secondary | 1.26e-10 | 1.41e-11 |
| Fuel Oil #2 Prod. | Cadmium | secondary | 1.18e-10 | 1.32e-11 |
| US electric grid | Cumene | model/secondary | 1.18e-10 | 1.32e-11 |
| Natural Gas Prod. | Phenanthrene | secondary | 1.11e-10 | 1.24e-11 |
| Fuel Oil #4 Prod. | Methyl methacrylate | secondary | 1.09e-10 | 1.22e-11 |
| LPG Production | Acenaphthylene | secondary | 1.03e-10 | 1.15e-11 |
| Fuel Oil #2 Prod. | Di(2-ethylhexyl)phthalate | secondary | 9.83e-11 | 1.10e-11 |
| Fuel Oil #4 Prod. | 1,2-Dichloroethane | secondary | 9.12e-11 | 1.02e-11 |
| Fuel Oil #2 Prod. | Cadmium cmpds | secondary | 9.09e-11 | 1.02e-11 |
| Fuel Oil #4 Prod. | Bromoform | secondary | 8.94e-11 | 1.00e-11 |
| Fuel Oil #2 Prod. | Toluene | secondary | 8.85e-11 | 9.90e-12 |
| Fuel Oil #6 Prod. | Dimethyl sulfate | secondary | 8.82e-11 | 9.87e-12 |
| Fuel Oil #4 Prod. | Dichloromethane | secondary | 8.63e-11 | 9.65e-12 |
| LPG Production | Acenaphthene | secondary | 8.56e-11 | 9.57e-12 |
| Natural Gas Prod. | 2-Methylnaphthalene | secondary | 8.53e-11 | 9.54e-12 |
| Fuel Oil #6 Prod. | Isophorone | secondary | 8.46e-11 | 9.46e-12 |
| Japanese Electric Grid | 5-Methyl chrysene | model/secondary | 8.46e-11 | 9.46e-12 |
| Fuel Oil #6 Prod. | Cadmium cmpds | secondary | 8.00e-11 | 8.94e-12 |
| Natural Gas Prod. | Methyl tert-butyl ether | secondary | 7.62e-11 | 8.52e-12 |
| US electric grid | Acetophenone | model/secondary | 7.33e-11 | 8.19e-12 |
| Fuel Oil #4 Prod. | Chlorobenzene | secondary | 7.22e-11 | 8.08e-12 |
| US electric grid | Biphenyl | model/secondary | 7.03e-11 | 7.86e-12 |
| Fuel Oil #6 Prod. | 1,4-Dichlorobenzene | secondary | 6.95e-11 | 7.78e-12 |
| Fuel Oil #6 Prod. | Methyl ethyl ketone | secondary | 6.82e-11 | 7.63e-12 |
| Fuel Oil #6 Prod. | Tetrachloroethylene | secondary | 6.72e-11 | 7.51e-12 |
| LPG Production | Nickel cmpds | secondary | 6.66e-11 | 7.45e-12 |
| LPG Production | Benzo[a]anthracene | secondary | 5.99e-11 | 6.70e-12 |
| Fuel Oil #6 Prod. | Methyl methacrylate | secondary | 5.83e-11 | 6.52e-12 |
| Fuel Oil #4 Prod. | 2,4-Dinitrotoluene | secondary | 5.75e-11 | 6.43e-12 |
| LPG Production | Chrysene | secondary | 5.75e-11 | 6.43e-12 |
| LPG Production | Lead cmpds | secondary | 5.60e-11 | 6.26e-12 |
| Natural Gas Prod. | Styrene | secondary | 5.56e-11 | 6.22e-12 |
| Natural Gas Prod. | Vinyl acetate | secondary | 5.43e-11 | 6.07e-12 |
| Fuel Oil #2 Prod. | 1,4-Dichlorobenzene | secondary | 4.95e-11 | 5.54e-12 |
| Fuel Oil #4 Prod. | Aromatic hydrocarbons | secondary | 4.92e-11 | 5.50e-12 |
| Fuel Oil #6 Prod. | 1,2-Dichloroethane | secondary | 4.86e-11 | 5.44e-12 |
| Fuel Oil #6 Prod. | Bromoform | secondary | 4.77e-11 | 5.33e-12 |
| Fuel Oil #2 Prod. | Dimethyl sulfate | secondary | 4.70e-11 | 5.26e-12 |
| Fuel Oil #4 Prod. | Copper (+1 & +2) | secondary | 4.60e-11 | 5.15e-12 |
| Fuel Oil #6 Prod. | Dichloromethane | secondary | 4.60e-11 | 5.15e-12 |
| Fuel Oil #2 Prod. | Isophorone | secondary | 4.51e-11 | 5.04e-12 |
| LPG Production | Indeno(1,2,3-cd)pyrene | secondary | 4.46e-11 | 4.98e-12 |
| Fuel Oil #4 Prod. | Chromium (III) | secondary | 4.44e-11 | 4.96e-12 |
| US electric grid | Acenaphthylene | model/secondary | 4.37e-11 | 4.88e-12 |
| Fuel Oil #6 Prod. | Chlorobenzene | secondary | 3.85e-11 | 4.31e-12 |
| US electric grid | Acenaphthene | model/secondary | 3.74e-11 | 4.18e-12 |

## Table M-40. LCD LCIA Results for the Terrestrial Ecotoxicity Impact Category

| Process Group | Material | LCI Data Type | Terrestrial Toxicity (tox-kg) | % of Total |
|---|---|---|---|---|
| Fuel Oil #2 Prod. | Methyl ethyl ketone | secondary | 3.64e-11 | 4.07e-12 |
| Fuel Oil #2 Prod. | Tetrachloroethylene | secondary | 3.58e-11 | 4.00e-12 |
| LPG Production | Benzo[b,j,k]fluoranthene | secondary | 3.53e-11 | 3.95e-12 |
| LPG Production | Mercury compounds | secondary | 3.39e-11 | 3.79e-12 |
| LPG Production | Benzo[a]pyrene | secondary | 3.28e-11 | 3.67e-12 |
| LPG Production | Fluorene | secondary | 3.17e-11 | 3.54e-12 |
| Fuel Oil #2 Prod. | Methyl methacrylate | secondary | 3.11e-11 | 3.48e-12 |
| Fuel Oil #4 Prod. | o-xylene | secondary | 3.10e-11 | 3.47e-12 |
| Fuel Oil #6 Prod. | 2,4-Dinitrotoluene | secondary | 3.06e-11 | 3.42e-12 |
| Fuel Oil #4 Prod. | Ethylbenzene | secondary | 2.86e-11 | 3.20e-12 |
| LPG Production | Pyrene | secondary | 2.74e-11 | 3.06e-12 |
| LPG Production | Benzo[g,h,i]perylene | secondary | 2.66e-11 | 2.98e-12 |
| Fuel Oil #2 Prod. | 1,2-Dichloroethane | secondary | 2.59e-11 | 2.90e-12 |
| LPG Production | Fluoranthene | secondary | 2.59e-11 | 2.89e-12 |
| Fuel Oil #2 Prod. | Bromoform | secondary | 2.54e-11 | 2.84e-12 |
| Fuel Oil #2 Prod. | Dichloromethane | secondary | 2.45e-11 | 2.74e-12 |
| LPG Production | HALON-1301 | secondary | 2.44e-11 | 2.72e-12 |
| LPG Production | Benzo[b]fluoranthene | secondary | 2.39e-11 | 2.68e-12 |
| Fuel Oil #6 Prod. | Chromium (III) | secondary | 2.37e-11 | 2.65e-12 |
| Natural Gas Prod. | Cadmium cmpds | secondary | 2.21e-11 | 2.47e-12 |
| Natural Gas Prod. | Ethylene dibromide | secondary | 2.20e-11 | 2.46e-12 |
| Natural Gas Prod. | 1,1,1-Trichloroethane | secondary | 2.07e-11 | 2.31e-12 |
| US electric grid | Benzo[b,j,k]fluoranthene | model/secondary | 2.06e-11 | 2.30e-12 |
| Fuel Oil #2 Prod. | Chlorobenzene | secondary | 2.05e-11 | 2.29e-12 |
| US electric grid | Chrysene | model/secondary | 1.98e-11 | 2.21e-12 |
| Fuel Oil #2 Prod. | Aromatic hydrocarbons | secondary | 1.83e-11 | 2.05e-12 |
| Japanese Electric Grid | Anthracene | model/secondary | 1.82e-11 | 2.04e-12 |
| US electric grid | Benzo[a]anthracene | model/secondary | 1.80e-11 | 2.01e-12 |
| Fuel Oil #2 Prod. | Copper (+1 & +2) | secondary | 1.72e-11 | 1.92e-12 |
| LPG Production | Dibenzo[a,h]anthracene | secondary | 1.70e-11 | 1.90e-12 |
| Fuel Oil #2 Prod. | 2,4-Dinitrotoluene | secondary | 1.63e-11 | 1.83e-12 |
| Fuel Oil #6 Prod. | Aromatic hydrocarbons | secondary | 1.61e-11 | 1.80e-12 |
| US electric grid | Fluorene | model/secondary | 1.55e-11 | 1.73e-12 |
| Fuel Oil #6 Prod. | Ethylbenzene | secondary | 1.52e-11 | 1.70e-12 |
| Fuel Oil #6 Prod. | Copper (+1 & +2) | secondary | 1.51e-11 | 1.69e-12 |
| Natural Gas Prod. | Ethyl Chloride | secondary | 1.47e-11 | 1.64e-12 |
| Fuel Oil #6 Prod. | o-xylene | secondary | 1.46e-11 | 1.63e-12 |
| Fuel Oil #4 Prod. | Methyl tert-butyl ether | secondary | 1.44e-11 | 1.61e-12 |
| US electric grid | Indeno(1,2,3-cd)pyrene | model/secondary | 1.28e-11 | 1.43e-12 |
| Fuel Oil #2 Prod. | Chromium (III) | secondary | 1.26e-11 | 1.41e-12 |
| Natural Gas Prod. | Cumene | secondary | 1.24e-11 | 1.39e-12 |
| US electric grid | Fluoranthene | model/secondary | 1.24e-11 | 1.38e-12 |
| Fuel Oil #4 Prod. | Phenanthrene | secondary | 1.13e-11 | 1.26e-12 |
| Natural Gas Prod. | Acenaphthylene | secondary | 1.10e-11 | 1.23e-12 |
| Fuel Oil #4 Prod. | Styrene | secondary | 1.05e-11 | 1.17e-12 |
| Fuel Oil #4 Prod. | Vinyl acetate | secondary | 1.02e-11 | 1.14e-12 |
| US electric grid | Pyrene | model/secondary | 1.02e-11 | 1.14e-12 |
| Fuel Oil #2 Prod. | o-xylene | secondary | 9.63e-12 | 1.08e-12 |
| Natural Gas Prod. | Benzo[a]anthracene | secondary | 8.84e-12 | 9.88e-13 |

## Table M-40. LCD LCIA Results for the Terrestrial Ecotoxicity Impact Category

| Process Group | Material | LCI Data Type | Terrestrial Toxicity (tox-kg) | % of Total |
|---|---|---|---|---|
| Natural Gas Prod. | Chrysene | secondary | 8.52e-12 | 9.52e-13 |
| Fuel Oil #2 Prod. | Ethylbenzene | secondary | 8.13e-12 | 9.09e-13 |
| Fuel Oil #4 Prod. | 3-Methylcholanthrene | secondary | 8.12e-12 | 9.08e-13 |
| Natural Gas Prod. | Indeno(1,2,3-cd)pyrene | secondary | 7.77e-12 | 8.69e-13 |
| Natural Gas Prod. | Acetophenone | secondary | 7.72e-12 | 8.63e-13 |
| Fuel Oil #6 Prod. | Methyl tert-butyl ether | secondary | 7.66e-12 | 8.56e-13 |
| Natural Gas Prod. | Biphenyl | secondary | 7.40e-12 | 8.28e-13 |
| US electric grid | o-xylene | model/secondary | 7.35e-12 | 8.22e-13 |
| Natural Gas Prod. | Acenaphthene | secondary | 7.10e-12 | 7.94e-13 |
| LPG Production | 5-Methyl chrysene | secondary | 7.06e-12 | 7.90e-13 |
| US electric grid | Benzo[g,h,i]perylene | model/secondary | 6.98e-12 | 7.81e-13 |
| US electric grid | Benzo[a]pyrene | model/secondary | 6.60e-12 | 7.38e-13 |
| Natural Gas Prod. | Benzo[b]fluoranthene | secondary | 6.58e-12 | 7.35e-13 |
| Fuel Oil #6 Prod. | Phenanthrene | secondary | 5.83e-12 | 6.52e-13 |
| LPG Production | Halogenated matter (organic) | secondary | 5.60e-12 | 6.26e-13 |
| Fuel Oil #6 Prod. | Styrene | secondary | 5.59e-12 | 6.25e-13 |
| Fuel Oil #6 Prod. | Vinyl acetate | secondary | 5.45e-12 | 6.10e-13 |
| US electric grid | 2-Methylnaphthalene | model/secondary | 5.16e-12 | 5.78e-13 |
| Natural Gas Prod. | Benzo[g,h,i]perylene | secondary | 5.03e-12 | 5.63e-13 |
| Natural Gas Prod. | Benzo[a]pyrene | secondary | 4.96e-12 | 5.55e-13 |
| Fuel Oil #4 Prod. | Zinc (+2) | secondary | 4.60e-12 | 5.14e-13 |
| Natural Gas Prod. | Dibenzo[a,h]anthracene | secondary | 4.47e-12 | 5.00e-13 |
| Natural Gas Prod. | Aromatic hydrocarbons | secondary | 4.46e-12 | 4.99e-13 |
| Natural Gas Prod. | Copper (+1 & +2) | secondary | 4.17e-12 | 4.67e-13 |
| Fuel Oil #4 Prod. | Ethylene dibromide | secondary | 4.14e-12 | 4.63e-13 |
| Fuel Oil #2 Prod. | Methyl tert-butyl ether | secondary | 4.08e-12 | 4.56e-13 |
| Fuel Oil #4 Prod. | 1,1,1-Trichloroethane | secondary | 3.90e-12 | 4.36e-13 |
| Natural Gas Prod. | Pyrene | secondary | 3.86e-12 | 4.32e-13 |
| US electric grid | 5-Methyl chrysene | model/secondary | 3.82e-12 | 4.27e-13 |
| Fuel Oil #6 Prod. | 3-Methylcholanthrene | secondary | 3.65e-12 | 4.08e-13 |
| Fuel Oil #2 Prod. | Phenanthrene | secondary | 3.28e-12 | 3.67e-13 |
| Fuel Oil #2 Prod. | Styrene | secondary | 2.98e-12 | 3.33e-13 |
| Fuel Oil #2 Prod. | Vinyl acetate | secondary | 2.91e-12 | 3.25e-13 |
| Fuel Oil #4 Prod. | Ethyl Chloride | secondary | 2.76e-12 | 3.09e-13 |
| Fuel Oil #4 Prod. | 2-Methylnaphthalene | secondary | 2.60e-12 | 2.91e-13 |
| Fuel Oil #2 Prod. | 3-Methylcholanthrene | secondary | 2.60e-12 | 2.91e-13 |
| Natural Gas Prod. | Fluorene | secondary | 2.58e-12 | 2.89e-13 |
| Fuel Oil #4 Prod. | Cumene | secondary | 2.34e-12 | 2.62e-13 |
| Natural Gas Prod. | Fluoranthene | secondary | 2.31e-12 | 2.58e-13 |
| Fuel Oil #4 Prod. | Chlorine | secondary | 2.26e-12 | 2.53e-13 |
| Fuel Oil #6 Prod. | Ethylene dibromide | secondary | 2.21e-12 | 2.47e-13 |
| Fuel Oil #6 Prod. | 1,1,1-Trichloroethane | secondary | 2.08e-12 | 2.32e-13 |
| Natural Gas Prod. | Benzo[b,j,k]fluoranthene | secondary | 2.01e-12 | 2.25e-13 |
| Fuel Oil #6 Prod. | Zinc (+2) | secondary | 1.81e-12 | 2.03e-13 |
| US electric grid | Dibenzo[a,h]anthracene | model/secondary | 1.69e-12 | 1.89e-13 |
| Fuel Oil #2 Prod. | Zinc (+2) | secondary | 1.58e-12 | 1.77e-13 |
| Fuel Oil #6 Prod. | Ethyl Chloride | secondary | 1.47e-12 | 1.65e-13 |
| Fuel Oil #4 Prod. | Acetophenone | secondary | 1.46e-12 | 1.63e-13 |
| Fuel Oil #4 Prod. | Biphenyl | secondary | 1.40e-12 | 1.56e-13 |
| Fuel Oil #6 Prod. | Cumene | secondary | 1.25e-12 | 1.39e-13 |
| LPG Production | Anthracene | secondary | 1.19e-12 | 1.33e-13 |

## Table M-40. LCD LCIA Results for the Terrestrial Ecotoxicity Impact Category

| Process Group | Material | LCI Data Type | Terrestrial Toxicity (tox-kg) | % of Total |
|---|---|---|---|---|
| Fuel Oil #2 Prod. | Ethylene dibromide | secondary | 1.18e-12 | 1.31e-13 |
| Fuel Oil #6 Prod. | 2-Methylnaphthalene | secondary | 1.17e-12 | 1.31e-13 |
| Fuel Oil #2 Prod. | 1,1,1-Trichloroethane | secondary | 1.11e-12 | 1.24e-13 |
| Fuel Oil #4 Prod. | Acenaphthylene | secondary | 1.06e-12 | 1.19e-13 |
| Fuel Oil #6 Prod. | Chlorine | secondary | 1.01e-12 | 1.13e-13 |
| Fuel Oil #2 Prod. | 2-Methylnaphthalene | secondary | 8.33e-13 | 9.31e-14 |
| Fuel Oil #4 Prod. | Acenaphthene | secondary | 8.30e-13 | 9.29e-14 |
| Fuel Oil #2 Prod. | Ethyl Chloride | secondary | 7.85e-13 | 8.78e-14 |
| Fuel Oil #6 Prod. | Acetophenone | secondary | 7.76e-13 | 8.67e-14 |
| Fuel Oil #6 Prod. | Biphenyl | secondary | 7.44e-13 | 8.32e-14 |
| Fuel Oil #2 Prod. | Chlorine | secondary | 7.28e-13 | 8.14e-14 |
| Fuel Oil #2 Prod. | Cumene | secondary | 6.64e-13 | 7.43e-14 |
| Fuel Oil #4 Prod. | Chrysene | secondary | 5.68e-13 | 6.35e-14 |
| Fuel Oil #4 Prod. | Benzo[a]anthracene | secondary | 5.64e-13 | 6.31e-14 |
| Fuel Oil #6 Prod. | Acenaphthylene | secondary | 5.49e-13 | 6.14e-14 |
| Fuel Oil #4 Prod. | Nickel cmpds | secondary | 4.88e-13 | 5.46e-14 |
| US electric grid | Anthracene | model/secondary | 4.49e-13 | 5.02e-14 |
| Fuel Oil #4 Prod. | Indeno(1,2,3-cd)pyrene | secondary | 4.30e-13 | 4.81e-14 |
| Fuel Oil #2 Prod. | Acetophenone | secondary | 4.13e-13 | 4.62e-14 |
| Fuel Oil #4 Prod. | Lead cmpds | secondary | 4.10e-13 | 4.59e-14 |
| Fuel Oil #6 Prod. | Acenaphthene | secondary | 4.04e-13 | 4.51e-14 |
| Natural Gas Prod. | 5-Methyl chrysene | secondary | 4.03e-13 | 4.50e-14 |
| Fuel Oil #2 Prod. | Biphenyl | secondary | 3.96e-13 | 4.43e-14 |
| Fuel Oil #4 Prod. | Benzo[b,j,k]fluoranthene | secondary | 3.79e-13 | 4.24e-14 |
| Fuel Oil #4 Prod. | Benzo[a]pyrene | secondary | 3.38e-13 | 3.78e-14 |
| Fuel Oil #4 Prod. | Fluorene | secondary | 3.33e-13 | 3.72e-14 |
| Fuel Oil #2 Prod. | Acenaphthylene | secondary | 3.10e-13 | 3.46e-14 |
| Fuel Oil #6 Prod. | Chrysene | secondary | 2.81e-13 | 3.14e-14 |
| Fuel Oil #4 Prod. | Pyrene | secondary | 2.74e-13 | 3.07e-14 |
| Fuel Oil #4 Prod. | Fluoranthene | secondary | 2.69e-13 | 3.01e-14 |
| Fuel Oil #6 Prod. | Benzo[a]anthracene | secondary | 2.65e-13 | 2.97e-14 |
| Fuel Oil #2 Prod. | Acenaphthene | secondary | 2.53e-13 | 2.83e-14 |
| Fuel Oil #4 Prod. | Benzo[g,h,i]perylene | secondary | 2.49e-13 | 2.79e-14 |
| Fuel Oil #4 Prod. | Mercury compounds | secondary | 2.48e-13 | 2.78e-14 |
| Fuel Oil #4 Prod. | Benzo[b]fluoranthene | secondary | 2.12e-13 | 2.37e-14 |
| Fuel Oil #6 Prod. | Indeno(1,2,3-cd)pyrene | secondary | 2.08e-13 | 2.33e-14 |
| Fuel Oil #6 Prod. | Benzo[b,j,k]fluoranthene | secondary | 2.02e-13 | 2.26e-14 |
| Japanese Electric Grid | 2,3,7,8-TCDF | model/secondary | 1.96e-13 | 2.20e-14 |
| Fuel Oil #2 Prod. | Nickel cmpds | secondary | 1.82e-13 | 2.03e-14 |
| Fuel Oil #4 Prod. | HALON-1301 | secondary | 1.78e-13 | 2.00e-14 |
| Fuel Oil #2 Prod. | Benzo[a]anthracene | secondary | 1.75e-13 | 1.96e-14 |
| Fuel Oil #6 Prod. | Fluorene | secondary | 1.74e-13 | 1.94e-14 |
| Fuel Oil #6 Prod. | Benzo[a]pyrene | secondary | 1.74e-13 | 1.94e-14 |
| Fuel Oil #2 Prod. | Chrysene | secondary | 1.71e-13 | 1.91e-14 |
| Fuel Oil #6 Prod. | Nickel cmpds | secondary | 1.60e-13 | 1.79e-14 |
| Fuel Oil #2 Prod. | Lead cmpds | secondary | 1.53e-13 | 1.71e-14 |
| Natural Gas Prod. | Anthracene | secondary | 1.51e-13 | 1.69e-14 |
| Fuel Oil #4 Prod. | Dibenzo[a,h]anthracene | secondary | 1.49e-13 | 1.67e-14 |
| Fuel Oil #6 Prod. | Fluoranthene | secondary | 1.40e-13 | 1.56e-14 |

## Table M-40. LCD LCIA Results for the Terrestrial Ecotoxicity Impact Category

| Process Group | Material | LCI Data Type | Terrestrial Toxicity (tox-kg) | % of Total |
|---|---|---|---|---|
| Fuel Oil #6 Prod. | Pyrene | secondary | 1.37e-13 | 1.54e-14 |
| Fuel Oil #6 Prod. | Lead cmpds | secondary | 1.34e-13 | 1.50e-14 |
| Fuel Oil #2 Prod. | Indeno(1,2,3-cd)pyrene | secondary | 1.31e-13 | 1.47e-14 |
| Fuel Oil #6 Prod. | Benzo[g,h,i]perylene | secondary | 1.17e-13 | 1.31e-14 |
| Fuel Oil #2 Prod. | Benzo[b,j,k]fluoranthene | secondary | 1.08e-13 | 1.21e-14 |
| Fuel Oil #2 Prod. | Benzo[a]pyrene | secondary | 9.87e-14 | 1.10e-14 |
| Fuel Oil #2 Prod. | Fluorene | secondary | 9.59e-14 | 1.07e-14 |
| Fuel Oil #6 Prod. | Benzo[b]fluoranthene | secondary | 9.33e-14 | 1.04e-14 |
| Fuel Oil #2 Prod. | Mercury compounds | secondary | 9.25e-14 | 1.04e-14 |
| Fuel Oil #2 Prod. | Pyrene | secondary | 8.17e-14 | 9.14e-15 |
| Fuel Oil #6 Prod. | Mercury compounds | secondary | 8.14e-14 | 9.10e-15 |
| Fuel Oil #2 Prod. | Fluoranthene | secondary | 7.81e-14 | 8.74e-15 |
| Fuel Oil #2 Prod. | Benzo[g,h,i]perylene | secondary | 7.78e-14 | 8.70e-15 |
| Fuel Oil #4 Prod. | 5-Methyl chrysene | secondary | 7.59e-14 | 8.49e-15 |
| Fuel Oil #2 Prod. | Benzo[b]fluoranthene | secondary | 6.88e-14 | 7.70e-15 |
| Fuel Oil #2 Prod. | HALON-1301 | secondary | 6.65e-14 | 7.44e-15 |
| Fuel Oil #6 Prod. | Dibenzo[a,h]anthracene | secondary | 6.48e-14 | 7.25e-15 |
| Fuel Oil #6 Prod. | HALON-1301 | secondary | 5.85e-14 | 6.54e-15 |
| Fuel Oil #2 Prod. | Dibenzo[a,h]anthracene | secondary | 4.88e-14 | 5.46e-15 |
| Natural Gas Prod. | Nickel cmpds | secondary | 4.43e-14 | 4.95e-15 |
| Fuel Oil #4 Prod. | Halogenated matter (organic) | secondary | 4.10e-14 | 4.59e-15 |
| Fuel Oil #6 Prod. | 5-Methyl chrysene | secondary | 4.04e-14 | 4.52e-15 |
| Natural Gas Prod. | Lead cmpds | secondary | 3.72e-14 | 4.16e-15 |
| Natural Gas Prod. | Mercury compounds | secondary | 2.25e-14 | 2.52e-15 |
| Fuel Oil #2 Prod. | 5-Methyl chrysene | secondary | 2.16e-14 | 2.41e-15 |
| Natural Gas Prod. | HALON-1301 | secondary | 1.62e-14 | 1.81e-15 |
| Fuel Oil #2 Prod. | Halogenated matter (organic) | secondary | 1.53e-14 | 1.71e-15 |
| LPG Production | Halogenated hydrocarbons (unspecified) | secondary | 1.40e-14 | 1.57e-15 |
| Fuel Oil #6 Prod. | Halogenated matter (organic) | secondary | 1.34e-14 | 1.50e-15 |
| Fuel Oil #4 Prod. | Anthracene | secondary | 1.21e-14 | 1.35e-15 |
| US electric grid | 2,3,7,8-TCDF | model/secondary | 8.86e-15 | 9.90e-16 |
| Fuel Oil #6 Prod. | Anthracene | secondary | 6.10e-15 | 6.82e-16 |
| Natural Gas Prod. | Halogenated matter (organic) | secondary | 3.72e-15 | 4.16e-16 |
| Fuel Oil #2 Prod. | Anthracene | secondary | 3.56e-15 | 3.99e-16 |
| Fuel Oil #4 Prod. | Halogenated hydrocarbons (unspecified) | secondary | 1.02e-16 | 1.15e-17 |
| Fuel Oil #2 Prod. | Halogenated hydrocarbons (unspecified) | secondary | 3.82e-17 | 4.27e-18 |
| Fuel Oil #6 Prod. | Halogenated hydrocarbons (unspecified) | secondary | 3.36e-17 | 3.76e-18 |
| Natural Gas Prod. | Halogenated hydrocarbons (unspecified) | secondary | 9.28e-18 | 1.04e-18 |
| **Total Manufacturing** | | | **2.33e+02** | **2.60e+01** |
| **Use, Maintenance and Repair Life-cycle Stage** | | | | |
| US electric grid | Sulfur dioxide | model/secondary | 6.15e+02 | 6.87e+01 |
| US electric grid | Nitrogen oxides | model/secondary | 4.39e-01 | 4.91e-02 |
| US electric grid | Carbon monoxide | model/secondary | 3.77e-01 | 4.22e-02 |
| US electric grid | Methane | model/secondary | 2.41e-01 | 2.69e-02 |
| US electric grid | Arsenic | model/secondary | 2.08e-01 | 2.33e-02 |
| US electric grid | Hydrochloric acid | model/secondary | 1.84e-01 | 2.06e-02 |
| US electric grid | Selenium | model/secondary | 3.46e-02 | 3.87e-03 |
| US electric grid | Vanadium | model/secondary | 2.61e-02 | 2.91e-03 |
| US electric grid | PM-10 | model/secondary | 2.16e-02 | 2.41e-03 |
| US electric grid | Hydrofluoric acid | model/secondary | 5.02e-03 | 5.62e-04 |

## Table M-40. LCD LCIA Results for the Terrestrial Ecotoxicity Impact Category

| Process Group | Material | LCI Data Type | Terrestrial Toxicity (tox-kg) | % of Total |
|---|---|---|---|---|
| US electric grid | Formaldehyde | model/secondary | 3.62e-03 | 4.04e-04 |
| US electric grid | Benzene | model/secondary | 2.60e-03 | 2.91e-04 |
| US electric grid | Phosphorus (yellow or white) | model/secondary | 1.47e-03 | 1.64e-04 |
| US electric grid | Nitrous oxide | model/secondary | 1.27e-03 | 1.42e-04 |
| US electric grid | Zinc (elemental) | model/secondary | 6.77e-04 | 7.57e-05 |
| US electric grid | Antimony | model/secondary | 5.54e-04 | 6.19e-05 |
| US electric grid | Molybdenum | model/secondary | 1.85e-04 | 2.07e-05 |
| US electric grid | 2-Chloroacetophenone | model/secondary | 1.61e-04 | 1.80e-05 |
| US electric grid | Bromomethane | model/secondary | 1.59e-04 | 1.78e-05 |
| US electric grid | Cyanide (-1) | model/secondary | 8.37e-05 | 9.36e-06 |
| US electric grid | 2,3,7,8-TCDD | model/secondary | 6.33e-05 | 7.08e-06 |
| US electric grid | Nickel | model/secondary | 6.09e-05 | 6.81e-06 |
| US electric grid | Naphthalene | model/secondary | 5.04e-05 | 5.64e-06 |
| US electric grid | Barium | model/secondary | 4.35e-05 | 4.86e-06 |
| US electric grid | Carbon disulfide | model/secondary | 2.99e-05 | 3.34e-06 |
| US electric grid | Benzyl chloride | model/secondary | 2.34e-05 | 2.62e-06 |
| US electric grid | Chloroform | model/secondary | 1.82e-05 | 2.04e-06 |
| US electric grid | Manganese | model/secondary | 1.70e-05 | 1.90e-06 |
| US electric grid | Chromium (VI) | model/secondary | 1.28e-05 | 1.43e-06 |
| US electric grid | Acrolein | model/secondary | 9.71e-06 | 1.09e-06 |
| US electric grid | Copper | model/secondary | 8.34e-06 | 9.33e-07 |
| US electric grid | Methyl chloride | model/secondary | 7.86e-06 | 8.79e-07 |
| US electric grid | Fluoride | model/secondary | 7.29e-06 | 8.15e-07 |
| US electric grid | Methyl hydrazine | model/secondary | 5.69e-06 | 6.36e-07 |
| US electric grid | Lead | model/secondary | 4.76e-06 | 5.32e-07 |
| US electric grid | Cobalt | model/secondary | 4.54e-06 | 5.07e-07 |
| US electric grid | Acetaldehyde | model/secondary | 4.37e-06 | 4.89e-07 |
| US electric grid | Propionaldehyde | model/secondary | 4.37e-06 | 4.89e-07 |
| US electric grid | Di(2-ethylhexyl)phthalate | model/secondary | 3.36e-06 | 3.75e-07 |
| US electric grid | Mercury | model/secondary | 2.80e-06 | 3.14e-07 |
| US electric grid | Hexane | model/secondary | 2.24e-06 | 2.51e-07 |
| US electric grid | Cadmium | model/secondary | 1.80e-06 | 2.01e-07 |
| US electric grid | Dimethyl sulfate | model/secondary | 1.61e-06 | 1.80e-07 |
| US electric grid | Toluene | model/secondary | 1.59e-06 | 1.77e-07 |
| US electric grid | Isophorone | model/secondary | 1.54e-06 | 1.72e-07 |
| US electric grid | Methyl ethyl ketone | model/secondary | 1.24e-06 | 1.39e-07 |
| US electric grid | Tetrachloroethylene | model/secondary | 1.22e-06 | 1.37e-07 |
| US electric grid | Methyl methacrylate | model/secondary | 1.06e-06 | 1.19e-07 |
| US electric grid | 1,2-Dichloroethane | model/secondary | 8.85e-07 | 9.90e-08 |
| US electric grid | Bromoform | model/secondary | 8.68e-07 | 9.71e-08 |
| US electric grid | Dichloromethane | model/secondary | 8.38e-07 | 9.37e-08 |
| US electric grid | Beryllium | model/secondary | 7.12e-07 | 7.96e-08 |
| US electric grid | Chlorobenzene | model/secondary | 7.01e-07 | 7.84e-08 |
| US electric grid | 2,4-Dinitrotoluene | model/secondary | 5.58e-07 | 6.24e-08 |
| US electric grid | Ethylbenzene | model/secondary | 2.76e-07 | 3.09e-08 |
| US electric grid | Methyl tert-butyl ether | model/secondary | 1.39e-07 | 1.56e-08 |
| US electric grid | Phenol | model/secondary | 1.06e-07 | 1.19e-08 |
| US electric grid | Styrene | model/secondary | 1.02e-07 | 1.14e-08 |
| US electric grid | Vinyl acetate | model/secondary | 9.93e-08 | 1.11e-08 |

## Table M-40. LCD LCIA Results for the Terrestrial Ecotoxicity Impact Category

| Process Group | Material | LCI Data Type | Terrestrial Toxicity (tox-kg) | % of Total |
|---|---|---|---|---|
| US electric grid | Phenanthrene | model/secondary | 9.35e-08 | 1.05e-08 |
| US electric grid | Xylene (mixed isomers) | model/secondary | 8.23e-08 | 9.21e-09 |
| US electric grid | Chromium (III) | model/secondary | 7.36e-08 | 8.23e-09 |
| US electric grid | 1,1,1-Trichloroethane | model/secondary | 4.05e-08 | 4.53e-09 |
| US electric grid | Ethylene dibromide | model/secondary | 4.02e-08 | 4.49e-09 |
| US electric grid | Ethyl Chloride | model/secondary | 2.68e-08 | 3.00e-09 |
| US electric grid | Cumene | model/secondary | 2.27e-08 | 2.54e-09 |
| US electric grid | Acetophenone | model/secondary | 1.41e-08 | 1.58e-09 |
| US electric grid | Biphenyl | model/secondary | 1.35e-08 | 1.51e-09 |
| US electric grid | Acenaphthylene | model/secondary | 8.42e-09 | 9.41e-10 |
| US electric grid | Acenaphthene | model/secondary | 7.21e-09 | 8.06e-10 |
| US electric grid | Benzo[b,j,k]fluoranthene | model/secondary | 3.97e-09 | 4.44e-10 |
| US electric grid | Chrysene | model/secondary | 3.81e-09 | 4.26e-10 |
| US electric grid | Benzo[a]anthracene | model/secondary | 3.46e-09 | 3.87e-10 |
| US electric grid | Fluorene | model/secondary | 2.98e-09 | 3.34e-10 |
| US electric grid | Indeno(1,2,3-cd)pyrene | model/secondary | 2.46e-09 | 2.75e-10 |
| US electric grid | Fluoranthene | model/secondary | 2.38e-09 | 2.67e-10 |
| US electric grid | Pyrene | model/secondary | 1.97e-09 | 2.21e-10 |
| US electric grid | o-xylene | model/secondary | 1.42e-09 | 1.58e-10 |
| US electric grid | Benzo[g,h,i]perylene | model/secondary | 1.35e-09 | 1.50e-10 |
| US electric grid | Benzo[a]pyrene | model/secondary | 1.27e-09 | 1.42e-10 |
| US electric grid | 2-Methylnaphthalene | model/secondary | 9.95e-10 | 1.11e-10 |
| US electric grid | 5-Methyl chrysene | model/secondary | 7.36e-10 | 8.24e-11 |
| US electric grid | Dibenzo[a,h]anthracene | model/secondary | 3.26e-10 | 3.65e-11 |
| US electric grid | Anthracene | model/secondary | 8.65e-11 | 9.67e-12 |
| US electric grid | 2,3,7,8-TCDF | model/secondary | 1.71e-12 | 1.91e-13 |
| **Total Use, Maintenance, and Repair** | | | **6.16e+02** | **6.89e+01** |
| **End-of-life Life-cycle Stage** | | | | |
| US electric grid | Sulfur dioxide | model/secondary | 1.17e-01 | 1.30e-02 |
| LCD landfilling | Sulfur dioxide | primary | 4.45e-02 | 4.98e-03 |
| LCD incineration | Sulfur dioxide | secondary | 3.45e-02 | 3.86e-03 |
| LCD landfilling | Carbon monoxide | primary | 2.22e-03 | 2.48e-04 |
| LCD landfilling | Nitrogen dioxide | primary | 4.46e-04 | 4.99e-05 |
| US electric grid | Nitrogen oxides | model/secondary | 8.34e-05 | 9.32e-06 |
| US electric grid | Carbon monoxide | model/secondary | 7.15e-05 | 8.00e-06 |
| LCD landfilling | PM | primary | 5.02e-05 | 5.61e-06 |
| US electric grid | Methane | model/secondary | 4.57e-05 | 5.11e-06 |
| LCD incineration | Arsenic cmpds | secondary | 4.30e-05 | 4.80e-06 |
| US electric grid | Arsenic | model/secondary | 3.95e-05 | 4.42e-06 |
| LCD landfilling | Arsenic cmpds | primary | 3.65e-05 | 4.08e-06 |
| US electric grid | Hydrochloric acid | model/secondary | 3.49e-05 | 3.90e-06 |
| LPG Production | Carbon monoxide | secondary | 2.11e-05 | 2.35e-06 |
| LCD landfilling | Methane | primary | 1.31e-05 | 1.47e-06 |
| LCD landfilling | Benzene | primary | 9.74e-06 | 1.09e-06 |
| US electric grid | Selenium | model/secondary | 6.57e-06 | 7.35e-07 |
| US electric grid | Vanadium | model/secondary | 4.94e-06 | 5.53e-07 |
| LCD incineration | Lead | secondary | 4.80e-06 | 5.37e-07 |
| LPG Production | Vanadium | secondary | 4.12e-06 | 4.61e-07 |
| US electric grid | PM-10 | model/secondary | 4.09e-06 | 4.58e-07 |
| LPG Production | Benzene | secondary | 3.38e-06 | 3.78e-07 |

## Table M-40. LCD LCIA Results for the Terrestrial Ecotoxicity Impact Category

| Process Group | Material | LCI Data Type | Terrestrial Toxicity (tox-kg) | % of Total |
|---|---|---|---|---|
| LPG Production | Methane | secondary | 3.30e-06 | 3.69e-07 |
| LPG Production | Sulfur oxides | secondary | 3.16e-06 | 3.53e-07 |
| LCD landfilling | Silver compounds | primary | 2.52e-06 | 2.82e-07 |
| LCD incineration | Barium cmpds | secondary | 2.33e-06 | 2.60e-07 |
| LPG Production | Nitrogen oxides | secondary | 2.26e-06 | 2.52e-07 |
| LCD landfilling | Barium cmpds | primary | 1.96e-06 | 2.19e-07 |
| LCD incineration | Silver compounds | secondary | 1.95e-06 | 2.19e-07 |
| LCD landfilling | Hydrochloric acid | primary | 1.13e-06 | 1.26e-07 |
| US electric grid | Hydrofluoric acid | model/secondary | 9.53e-07 | 1.07e-07 |
| LPG Production | Arsenic | secondary | 8.13e-07 | 9.10e-08 |
| US electric grid | Formaldehyde | model/secondary | 6.86e-07 | 7.67e-08 |
| LCD landfilling | Ammonia | primary | 5.79e-07 | 6.48e-08 |
| LPG Production | Formaldehyde | secondary | 5.28e-07 | 5.90e-08 |
| LPG Production | PM | secondary | 5.08e-07 | 5.68e-08 |
| US electric grid | Benzene | model/secondary | 4.94e-07 | 5.52e-08 |
| LCD incineration | Cadmium cmpds | secondary | 3.54e-07 | 3.96e-08 |
| LCD landfilling | Cadmium cmpds | primary | 3.27e-07 | 3.65e-08 |
| US electric grid | Phosphorus (yellow or white) | model/secondary | 2.78e-07 | 3.11e-08 |
| US electric grid | Nitrous oxide | model/secondary | 2.41e-07 | 2.69e-08 |
| LPG Production | Hydrochloric acid | secondary | 1.45e-07 | 1.62e-08 |
| US electric grid | Zinc (elemental) | model/secondary | 1.28e-07 | 1.44e-08 |
| US electric grid | Antimony | model/secondary | 1.05e-07 | 1.17e-08 |
| LPG Production | Nitrous oxide | secondary | 6.39e-08 | 7.15e-09 |
| LCD landfilling | Hydrogen sulfide | primary | 5.54e-08 | 6.20e-09 |
| LPG Production | Phosphorus (yellow or white) | secondary | 3.86e-08 | 4.32e-09 |
| US electric grid | Molybdenum | model/secondary | 3.51e-08 | 3.93e-09 |
| US electric grid | 2-Chloroacetophenone | model/secondary | 3.05e-08 | 3.42e-09 |
| US electric grid | Bromomethane | model/secondary | 3.02e-08 | 3.38e-09 |
| LPG Production | Fluorides (F-) | secondary | 2.96e-08 | 3.31e-09 |
| LPG Production | Selenium | secondary | 2.92e-08 | 3.27e-09 |
| US electric grid | Cyanide (-1) | model/secondary | 1.59e-08 | 1.78e-09 |
| LPG Production | Ammonia | secondary | 1.47e-08 | 1.65e-09 |
| LPG Production | Hydrogen sulfide | secondary | 1.21e-08 | 1.35e-09 |
| US electric grid | 2,3,7,8-TCDD | model/secondary | 1.20e-08 | 1.34e-09 |
| US electric grid | Nickel | model/secondary | 1.15e-08 | 1.29e-09 |
| LCD landfilling | Selenium | primary | 1.05e-08 | 1.17e-09 |
| US electric grid | Naphthalene | model/secondary | 9.56e-09 | 1.07e-09 |
| US electric grid | Barium | model/secondary | 8.25e-09 | 9.22e-10 |
| LPG Production | Molybdenum | secondary | 6.49e-09 | 7.25e-10 |
| US electric grid | Carbon disulfide | model/secondary | 5.67e-09 | 6.34e-10 |
| LPG Production | Zinc (elemental) | secondary | 4.72e-09 | 5.28e-10 |
| LCD landfilling | Chromium (VI) | primary | 4.65e-09 | 5.20e-10 |
| LCD incineration | Mercury compounds | secondary | 4.57e-09 | 5.11e-10 |
| US electric grid | Benzyl chloride | model/secondary | 4.45e-09 | 4.97e-10 |
| LCD landfilling | Carbon tetrachloride | primary | 4.04e-09 | 4.52e-10 |
| LPG Production | Hydrofluoric acid | secondary | 3.95e-09 | 4.42e-10 |
| LCD landfilling | Mercury compounds | primary | 3.95e-09 | 4.42e-10 |
| US electric grid | Chloroform | model/secondary | 3.46e-09 | 3.87e-10 |
| US electric grid | Manganese | model/secondary | 3.23e-09 | 3.61e-10 |

## Table M-40. LCD LCIA Results for the Terrestrial Ecotoxicity Impact Category

| Process Group | Material | LCI Data Type | Terrestrial Toxicity (tox-kg) | % of Total |
|---|---|---|---|---|
| LCD incineration | Carbon tetrachloride | secondary | 3.13e-09 | 3.50e-10 |
| LCD landfilling | Chloroform | primary | 3.13e-09 | 3.50e-10 |
| LPG Production | Ethane | secondary | 3.06e-09 | 3.42e-10 |
| LPG Production | Phenol | secondary | 2.82e-09 | 3.15e-10 |
| LPG Production | Pentane | secondary | 2.56e-09 | 2.87e-10 |
| US electric grid | Chromium (VI) | model/secondary | 2.43e-09 | 2.72e-10 |
| LCD landfilling | Toluene | primary | 1.98e-09 | 2.21e-10 |
| US electric grid | Acrolein | model/secondary | 1.84e-09 | 2.06e-10 |
| LPG Production | Hexane | secondary | 1.78e-09 | 1.99e-10 |
| US electric grid | Copper | model/secondary | 1.58e-09 | 1.77e-10 |
| US electric grid | Methyl chloride | model/secondary | 1.49e-09 | 1.67e-10 |
| US electric grid | Fluoride | model/secondary | 1.38e-09 | 1.55e-10 |
| LPG Production | Nickel | secondary | 1.14e-09 | 1.28e-10 |
| US electric grid | Methyl hydrazine | model/secondary | 1.08e-09 | 1.21e-10 |
| US electric grid | Lead | model/secondary | 9.03e-10 | 1.01e-10 |
| LPG Production | PM-10 | secondary | 8.86e-10 | 9.91e-11 |
| US electric grid | Cobalt | model/secondary | 8.61e-10 | 9.63e-11 |
| LPG Production | Antimony | secondary | 8.42e-10 | 9.42e-11 |
| US electric grid | Propionaldehyde | model/secondary | 8.29e-10 | 9.27e-11 |
| US electric grid | Acetaldehyde | model/secondary | 8.29e-10 | 9.27e-11 |
| US electric grid | Di(2-ethylhexyl)phthalate | model/secondary | 6.37e-10 | 7.12e-11 |
| LPG Production | Aluminum (+3) | secondary | 5.58e-10 | 6.24e-11 |
| US electric grid | Mercury | model/secondary | 5.32e-10 | 5.95e-11 |
| US electric grid | Hexane | model/secondary | 4.26e-10 | 4.76e-11 |
| LCD landfilling | Xylene (mixed isomers) | primary | 4.08e-10 | 4.56e-11 |
| LPG Production | Chromium (VI) | secondary | 3.97e-10 | 4.44e-11 |
| US electric grid | Cadmium | model/secondary | 3.41e-10 | 3.82e-11 |
| US electric grid | Dimethyl sulfate | model/secondary | 3.05e-10 | 3.41e-11 |
| US electric grid | Toluene | model/secondary | 3.01e-10 | 3.36e-11 |
| US electric grid | Isophorone | model/secondary | 2.92e-10 | 3.27e-11 |
| LCD landfilling | Tetrachloroethylene | primary | 2.89e-10 | 3.23e-11 |
| LCD incineration | Lead cmpds | secondary | 2.59e-10 | 2.90e-11 |
| LCD landfilling | Lead cmpds | primary | 2.40e-10 | 2.69e-11 |
| LPG Production | Nitrate | secondary | 2.39e-10 | 2.67e-11 |
| US electric grid | Methyl ethyl ketone | model/secondary | 2.36e-10 | 2.64e-11 |
| US electric grid | Tetrachloroethylene | model/secondary | 2.32e-10 | 2.60e-11 |
| LCD landfilling | 1,2-Dichloroethane | primary | 2.24e-10 | 2.51e-11 |
| US electric grid | Methyl methacrylate | model/secondary | 2.02e-10 | 2.25e-11 |
| LCD landfilling | Trichloroethylene | primary | 1.68e-10 | 1.88e-11 |
| US electric grid | 1,2-Dichloroethane | model/secondary | 1.68e-10 | 1.88e-11 |
| US electric grid | Bromoform | model/secondary | 1.65e-10 | 1.84e-11 |
| US electric grid | Dichloromethane | model/secondary | 1.59e-10 | 1.78e-11 |
| LPG Production | Copper | secondary | 1.37e-10 | 1.54e-11 |
| US electric grid | Beryllium | model/secondary | 1.35e-10 | 1.51e-11 |
| US electric grid | Chlorobenzene | model/secondary | 1.33e-10 | 1.49e-11 |
| LCD incineration | Trichloroethylene | secondary | 1.31e-10 | 1.46e-11 |
| LPG Production | 2-Chloroacetophenone | secondary | 1.27e-10 | 1.42e-11 |
| LPG Production | Dimethylbenzanthracene | secondary | 1.26e-10 | 1.41e-11 |
| LPG Production | Bromomethane | secondary | 1.25e-10 | 1.40e-11 |
| LCD landfilling | Ethylbenzene | primary | 1.07e-10 | 1.19e-11 |
| US electric grid | 2,4-Dinitrotoluene | model/secondary | 1.06e-10 | 1.18e-11 |

## Table M-40. LCD LCIA Results for the Terrestrial Ecotoxicity Impact Category

| Process Group | Material | LCI Data Type | Terrestrial Toxicity (tox-kg) | % of Total |
|---|---|---|---|---|
| LPG Production | Naphthalene | secondary | 1.02e-10 | 1.14e-11 |
| LPG Production | Manganese | secondary | 8.79e-11 | 9.83e-12 |
| LPG Production | Barium | secondary | 7.34e-11 | 8.21e-12 |
| LPG Production | Silicon | secondary | 6.66e-11 | 7.45e-12 |
| LPG Production | Cyanide (-1) | secondary | 6.59e-11 | 7.37e-12 |
| LPG Production | Barium cmpds | secondary | 6.25e-11 | 6.99e-12 |
| US electric grid | Ethylbenzene | model/secondary | 5.24e-11 | 5.86e-12 |
| LPG Production | Lead | secondary | 4.87e-11 | 5.44e-12 |
| LCD landfilling | Dichloromethane | primary | 4.68e-11 | 5.24e-12 |
| US electric grid | Methyl tert-butyl ether | model/secondary | 2.65e-11 | 2.96e-12 |
| LPG Production | Carbon disulfide | secondary | 2.35e-11 | 2.63e-12 |
| US electric grid | Phenol | model/secondary | 2.02e-11 | 2.25e-12 |
| US electric grid | Styrene | model/secondary | 1.93e-11 | 2.16e-12 |
| US electric grid | Vinyl acetate | model/secondary | 1.88e-11 | 2.11e-12 |
| LPG Production | Benzyl chloride | secondary | 1.84e-11 | 2.06e-12 |
| US electric grid | Phenanthrene | model/secondary | 1.77e-11 | 1.98e-12 |
| US electric grid | Xylene (mixed isomers) | model/secondary | 1.56e-11 | 1.75e-12 |
| LPG Production | Aluminum (elemental) | secondary | 1.52e-11 | 1.71e-12 |
| LPG Production | Chloroform | secondary | 1.43e-11 | 1.60e-12 |
| US electric grid | Chromium (III) | model/secondary | 1.40e-11 | 1.56e-12 |
| LPG Production | Cobalt | secondary | 9.89e-12 | 1.11e-12 |
| LCD incineration | o-xylene | secondary | 9.08e-12 | 1.02e-12 |
| LCD landfilling | Chromium (III) | primary | 7.92e-12 | 8.86e-13 |
| US electric grid | 1,1,1-Trichloroethane | model/secondary | 7.68e-12 | 8.59e-13 |
| LPG Production | Acrolein | secondary | 7.64e-12 | 8.55e-13 |
| US electric grid | Ethylene dibromide | model/secondary | 7.62e-12 | 8.52e-13 |
| LPG Production | Methyl chloride | secondary | 6.19e-12 | 6.92e-13 |
| LPG Production | Beryllium | secondary | 5.53e-12 | 6.19e-13 |
| US electric grid | Ethyl Chloride | model/secondary | 5.09e-12 | 5.69e-13 |
| LPG Production | Methyl hydrazine | secondary | 4.48e-12 | 5.01e-13 |
| US electric grid | Cumene | model/secondary | 4.31e-12 | 4.82e-13 |
| LPG Production | Acetaldehyde | secondary | 3.44e-12 | 3.85e-13 |
| LPG Production | Propionaldehyde | secondary | 3.44e-12 | 3.85e-13 |
| LPG Production | Mercury | secondary | 3.42e-12 | 3.83e-13 |
| LPG Production | Cadmium | secondary | 3.19e-12 | 3.57e-13 |
| LPG Production | Cadmium cmpds | secondary | 2.74e-12 | 3.06e-13 |
| US electric grid | Acetophenone | model/secondary | 2.68e-12 | 3.00e-13 |
| LPG Production | Di(2-ethylhexyl)phthalate | secondary | 2.64e-12 | 2.96e-13 |
| US electric grid | Biphenyl | model/secondary | 2.57e-12 | 2.87e-13 |
| LPG Production | Toluene | secondary | 2.45e-12 | 2.75e-13 |
| US electric grid | Acenaphthylene | model/secondary | 1.60e-12 | 1.79e-13 |
| LPG Production | 1,4-Dichlorobenzene | secondary | 1.41e-12 | 1.57e-13 |
| US electric grid | Acenaphthene | model/secondary | 1.37e-12 | 1.53e-13 |
| LPG Production | Dimethyl sulfate | secondary | 1.27e-12 | 1.41e-13 |
| LPG Production | Isophorone | secondary | 1.21e-12 | 1.36e-13 |
| LPG Production | Methyl ethyl ketone | secondary | 9.79e-13 | 1.09e-13 |
| LPG Production | Tetrachloroethylene | secondary | 9.63e-13 | 1.08e-13 |
| LPG Production | Methyl methacrylate | secondary | 8.36e-13 | 9.35e-14 |
| US electric grid | Benzo[b,j,k]fluoranthene | model/secondary | 7.53e-13 | 8.43e-14 |

## Table M-40. LCD LCIA Results for the Terrestrial Ecotoxicity Impact Category

| Process Group | Material | LCI Data Type | Terrestrial Toxicity (tox-kg) | % of Total |
|---|---|---|---|---|
| US electric grid | Chrysene | model/secondary | 7.23e-13 | 8.09e-14 |
| LPG Production | 1,2-Dichloroethane | secondary | 6.97e-13 | 7.79e-14 |
| LPG Production | Bromoform | secondary | 6.83e-13 | 7.64e-14 |
| LPG Production | Chromium (III) | secondary | 6.76e-13 | 7.56e-14 |
| LCD landfilling | Vinyl chloride | primary | 6.68e-13 | 7.47e-14 |
| LPG Production | Dichloromethane | secondary | 6.60e-13 | 7.38e-14 |
| US electric grid | Benzo[a]anthracene | model/secondary | 6.57e-13 | 7.34e-14 |
| US electric grid | Fluorene | model/secondary | 5.66e-13 | 6.33e-14 |
| LPG Production | Chlorobenzene | secondary | 5.52e-13 | 6.17e-14 |
| LPG Production | Aromatic hydrocarbons | secondary | 5.52e-13 | 6.17e-14 |
| LCD incineration | Vinyl chloride | secondary | 5.18e-13 | 5.79e-14 |
| LPG Production | Copper (+1 & +2) | secondary | 5.16e-13 | 5.77e-14 |
| US electric grid | Indeno(1,2,3-cd)pyrene | model/secondary | 4.67e-13 | 5.22e-14 |
| US electric grid | Fluoranthene | model/secondary | 4.52e-13 | 5.06e-14 |
| LPG Production | 2,4-Dinitrotoluene | secondary | 4.39e-13 | 4.91e-14 |
| US electric grid | Pyrene | model/secondary | 3.74e-13 | 4.18e-14 |
| LPG Production | o-xylene | secondary | 2.70e-13 | 3.02e-14 |
| US electric grid | o-xylene | model/secondary | 2.69e-13 | 3.00e-14 |
| US electric grid | Benzo[g,h,i]perylene | model/secondary | 2.55e-13 | 2.85e-14 |
| US electric grid | Benzo[a]pyrene | model/secondary | 2.41e-13 | 2.70e-14 |
| LPG Production | Ethylbenzene | secondary | 2.19e-13 | 2.45e-14 |
| US electric grid | 2-Methylnaphthalene | model/secondary | 1.89e-13 | 2.11e-14 |
| US electric grid | 5-Methyl chrysene | model/secondary | 1.40e-13 | 1.56e-14 |
| LPG Production | Methyl tert-butyl ether | secondary | 1.10e-13 | 1.23e-14 |
| LPG Production | Phenanthrene | secondary | 8.93e-14 | 9.98e-15 |
| LPG Production | Styrene | secondary | 8.01e-14 | 8.96e-15 |
| LPG Production | Vinyl acetate | secondary | 7.82e-14 | 8.74e-15 |
| LPG Production | 3-Methylcholanthrene | secondary | 7.38e-14 | 8.26e-15 |
| US electric grid | Dibenzo[a,h]anthracene | model/secondary | 6.19e-14 | 6.92e-15 |
| LPG Production | Zinc (+2) | secondary | 4.62e-14 | 5.17e-15 |
| LPG Production | Ethylene dibromide | secondary | 3.16e-14 | 3.54e-15 |
| LPG Production | 1,1,1-Trichloroethane | secondary | 2.98e-14 | 3.33e-15 |
| LPG Production | 2-Methylnaphthalene | secondary | 2.37e-14 | 2.65e-15 |
| LPG Production | Ethyl Chloride | secondary | 2.11e-14 | 2.36e-15 |
| LPG Production | Chlorine | secondary | 2.10e-14 | 2.34e-15 |
| LPG Production | Cumene | secondary | 1.79e-14 | 2.00e-15 |
| US electric grid | Anthracene | model/secondary | 1.64e-14 | 1.84e-15 |
| LPG Production | Acetophenone | secondary | 1.11e-14 | 1.24e-15 |
| LPG Production | Biphenyl | secondary | 1.07e-14 | 1.19e-15 |
| LPG Production | Acenaphthylene | secondary | 8.43e-15 | 9.43e-16 |
| LPG Production | Acenaphthene | secondary | 7.02e-15 | 7.86e-16 |
| LPG Production | Nickel cmpds | secondary | 5.47e-15 | 6.12e-16 |
| LPG Production | Benzo[a]anthracene | secondary | 4.92e-15 | 5.50e-16 |
| LPG Production | Chrysene | secondary | 4.72e-15 | 5.27e-16 |
| LPG Production | Lead cmpds | secondary | 4.60e-15 | 5.14e-16 |
| LPG Production | Indeno(1,2,3-cd)pyrene | secondary | 3.66e-15 | 4.09e-16 |
| LPG Production | Benzo[b,j,k]fluoranthene | secondary | 2.90e-15 | 3.24e-16 |
| LPG Production | Mercury compounds | secondary | 2.78e-15 | 3.11e-16 |
| LPG Production | Benzo[a]pyrene | secondary | 2.69e-15 | 3.01e-16 |
| LPG Production | Fluorene | secondary | 2.60e-15 | 2.91e-16 |
| LPG Production | Pyrene | secondary | 2.25e-15 | 2.52e-16 |

## Table M-40. LCD LCIA Results for the Terrestrial Ecotoxicity Impact Category

| Process Group | Material | LCI Data Type | Terrestrial Toxicity (tox-kg) | % of Total |
|---|---|---|---|---|
| LPG Production | Benzo[g,h,i]perylene | secondary | 2.19e-15 | 2.44e-16 |
| LPG Production | Fluoranthene | secondary | 2.12e-15 | 2.37e-16 |
| LPG Production | HALON-1301 | secondary | 2.00e-15 | 2.24e-16 |
| LPG Production | Benzo[b]fluoranthene | secondary | 1.96e-15 | 2.20e-16 |
| LPG Production | Dibenzo[a,h]anthracene | secondary | 1.40e-15 | 1.56e-16 |
| LPG Production | 5-Methyl chrysene | secondary | 5.80e-16 | 6.48e-17 |
| LPG Production | Halogenated matter (organic) | secondary | 4.60e-16 | 5.14e-17 |
| US electric grid | 2,3,7,8-TCDF | model/secondary | 3.24e-16 | 3.62e-17 |
| LPG Production | Anthracene | secondary | 9.78e-17 | 1.09e-17 |
| LPG Production | Halogenated hydrocarbons (unspecified) | secondary | 1.15e-18 | 1.29e-19 |
| Natural Gas Prod. | Halogenated hydrocarbons (unspecified) | secondary | -1.95e-18 | -2.18e-19 |
| LCD incineration | Halogenated hydrocarbons (unspecified) | secondary | -2.06e-17 | -2.31e-18 |
| Fuel Oil #4 Prod. | Halogenated hydrocarbons (unspecified) | secondary | -4.72e-16 | -5.28e-17 |
| Natural Gas Prod. | Halogenated matter (organic) | secondary | -7.81e-16 | -8.73e-17 |
| Natural Gas Prod. | HALON-1301 | secondary | -3.40e-15 | -3.80e-16 |
| Natural Gas Prod. | Mercury compounds | secondary | -4.73e-15 | -5.29e-16 |
| Natural Gas Prod. | Lead cmpds | secondary | -7.81e-15 | -8.73e-16 |
| Natural Gas Prod. | Nickel cmpds | secondary | -9.29e-15 | -1.04e-15 |
| LCD incineration | Halogenated matter (organic) | secondary | -1.19e-14 | -1.33e-15 |
| Natural Gas Prod. | Anthracene | secondary | -3.17e-14 | -3.54e-15 |
| LCD incineration | HALON-1301 | secondary | -5.17e-14 | -5.79e-15 |
| Fuel Oil #4 Prod. | Anthracene | secondary | -5.55e-14 | -6.21e-15 |
| Natural Gas Prod. | 5-Methyl chrysene | secondary | -8.45e-14 | -9.45e-15 |
| LCD incineration | Nickel cmpds | secondary | -1.42e-13 | -1.58e-14 |
| Fuel Oil #4 Prod. | Halogenated matter (organic) | secondary | -1.89e-13 | -2.11e-14 |
| LCD incineration | Dibenzo[a,h]anthracene | secondary | -2.91e-13 | -3.26e-14 |
| Fuel Oil #4 Prod. | 5-Methyl chrysene | secondary | -3.50e-13 | -3.91e-14 |
| Natural Gas Prod. | Benzo[b,j,k]fluoranthene | secondary | -4.23e-13 | -4.73e-14 |
| LCD incineration | Benzo[b]fluoranthene | secondary | -4.31e-13 | -4.82e-14 |
| Natural Gas Prod. | Fluoranthene | secondary | -4.85e-13 | -5.42e-14 |
| Natural Gas Prod. | Fluorene | secondary | -5.43e-13 | -6.07e-14 |
| Fuel Oil #4 Prod. | Dibenzo[a,h]anthracene | secondary | -6.88e-13 | -7.70e-14 |
| Natural Gas Prod. | Pyrene | secondary | -8.10e-13 | -9.06e-14 |
| Fuel Oil #4 Prod. | HALON-1301 | secondary | -8.22e-13 | -9.19e-14 |
| Natural Gas Prod. | Copper (+1 & +2) | secondary | -8.77e-13 | -9.80e-14 |
| Natural Gas Prod. | Aromatic hydrocarbons | secondary | -9.37e-13 | -1.05e-13 |
| Natural Gas Prod. | Dibenzo[a,h]anthracene | secondary | -9.38e-13 | -1.05e-13 |
| Fuel Oil #4 Prod. | Benzo[b]fluoranthene | secondary | -9.78e-13 | -1.09e-13 |
| Natural Gas Prod. | Benzo[a]pyrene | secondary | -1.04e-12 | -1.17e-13 |
| Natural Gas Prod. | Benzo[g,h,i]perylene | secondary | -1.06e-12 | -1.18e-13 |
| Fuel Oil #4 Prod. | Mercury compounds | secondary | -1.14e-12 | -1.28e-13 |
| Fuel Oil #4 Prod. | Benzo[g,h,i]perylene | secondary | -1.15e-12 | -1.28e-13 |
| Fuel Oil #4 Prod. | Fluoranthene | secondary | -1.24e-12 | -1.39e-13 |
| Fuel Oil #4 Prod. | Pyrene | secondary | -1.26e-12 | -1.41e-13 |
| Natural Gas Prod. | Benzo[b]fluoranthene | secondary | -1.38e-12 | -1.54e-13 |
| Natural Gas Prod. | Acenaphthene | secondary | -1.49e-12 | -1.67e-13 |
| Fuel Oil #4 Prod. | Fluorene | secondary | -1.53e-12 | -1.71e-13 |
| Natural Gas Prod. | Biphenyl | secondary | -1.55e-12 | -1.74e-13 |
| Fuel Oil #4 Prod. | Benzo[a]pyrene | secondary | -1.56e-12 | -1.74e-13 |

## Table M-40. LCD LCIA Results for the Terrestrial Ecotoxicity Impact Category

| Process Group | Material | LCI Data Type | Terrestrial Toxicity (tox-kg) | % of Total |
|---|---|---|---|---|
| Natural Gas Prod. | Acetophenone | secondary | -1.62e-12 | -1.81e-13 |
| Natural Gas Prod. | Indeno(1,2,3-cd)pyrene | secondary | -1.63e-12 | -1.83e-13 |
| Fuel Oil #4 Prod. | Benzo[b,j,k]fluoranthene | secondary | -1.75e-12 | -1.96e-13 |
| Natural Gas Prod. | Chrysene | secondary | -1.79e-12 | -2.00e-13 |
| Natural Gas Prod. | Benzo[a]anthracene | secondary | -1.86e-12 | -2.08e-13 |
| Fuel Oil #4 Prod. | Lead cmpds | secondary | -1.89e-12 | -2.11e-13 |
| Fuel Oil #4 Prod. | Indeno(1,2,3-cd)pyrene | secondary | -1.98e-12 | -2.22e-13 |
| Fuel Oil #4 Prod. | Nickel cmpds | secondary | -2.25e-12 | -2.51e-13 |
| Natural Gas Prod. | Acenaphthylene | secondary | -2.32e-12 | -2.59e-13 |
| LCD incineration | Anthracene | secondary | -2.41e-12 | -2.70e-13 |
| Fuel Oil #4 Prod. | Benzo[a]anthracene | secondary | -2.60e-12 | -2.91e-13 |
| Natural Gas Prod. | Cumene | secondary | -2.61e-12 | -2.91e-13 |
| Fuel Oil #4 Prod. | Chrysene | secondary | -2.61e-12 | -2.92e-13 |
| Natural Gas Prod. | Ethyl Chloride | secondary | -3.08e-12 | -3.44e-13 |
| Fuel Oil #4 Prod. | Acenaphthene | secondary | -3.83e-12 | -4.28e-13 |
| Natural Gas Prod. | 1,1,1-Trichloroethane | secondary | -4.35e-12 | -4.86e-13 |
| Natural Gas Prod. | Ethylene dibromide | secondary | -4.61e-12 | -5.16e-13 |
| Natural Gas Prod. | Cadmium cmpds | secondary | -4.65e-12 | -5.20e-13 |
| Fuel Oil #4 Prod. | Acenaphthylene | secondary | -4.90e-12 | -5.48e-13 |
| LCD incineration | 2-Methylnaphthalene | secondary | -5.65e-12 | -6.31e-13 |
| Fuel Oil #4 Prod. | Biphenyl | secondary | -6.43e-12 | -7.19e-13 |
| Fuel Oil #4 Prod. | Acetophenone | secondary | -6.71e-12 | -7.50e-13 |
| Fuel Oil #4 Prod. | Chlorine | secondary | -1.04e-11 | -1.17e-12 |
| Fuel Oil #4 Prod. | Cumene | secondary | -1.08e-11 | -1.21e-12 |
| Natural Gas Prod. | Vinyl acetate | secondary | -1.14e-11 | -1.27e-12 |
| Natural Gas Prod. | Styrene | secondary | -1.17e-11 | -1.31e-12 |
| Fuel Oil #4 Prod. | 2-Methylnaphthalene | secondary | -1.20e-11 | -1.34e-12 |
| LCD incineration | Chlorine | secondary | -1.26e-11 | -1.40e-12 |
| Fuel Oil #4 Prod. | Ethyl Chloride | secondary | -1.27e-11 | -1.42e-12 |
| LCD incineration | Copper (+1 & +2) | secondary | -1.34e-11 | -1.49e-12 |
| LCD incineration | Aromatic hydrocarbons | secondary | -1.43e-11 | -1.60e-12 |
| LCD incineration | Zinc (+2) | secondary | -1.45e-11 | -1.62e-12 |
| Natural Gas Prod. | Methyl tert-butyl ether | secondary | -1.60e-11 | -1.79e-12 |
| LCD incineration | 3-Methylcholanthrene | secondary | -1.76e-11 | -1.97e-12 |
| Natural Gas Prod. | 2-Methylnaphthalene | secondary | -1.79e-11 | -2.00e-12 |
| Fuel Oil #4 Prod. | 1,1,1-Trichloroethane | secondary | -1.80e-11 | -2.01e-12 |
| Fuel Oil #4 Prod. | Ethylene dibromide | secondary | -1.91e-11 | -2.13e-12 |
| Fuel Oil #4 Prod. | Zinc (+2) | secondary | -2.12e-11 | -2.37e-12 |
| LCD incineration | 5-Methyl chrysene | secondary | -2.12e-11 | -2.37e-12 |
| Natural Gas Prod. | Phenanthrene | secondary | -2.33e-11 | -2.61e-12 |
| LCD incineration | Benzo[g,h,i]perylene | secondary | -2.63e-11 | -2.94e-12 |
| Natural Gas Prod. | Aluminum (elemental) | secondary | -2.81e-11 | -3.15e-12 |
| LCD incineration | Dichlorobenzene (mixed isomers) | secondary | -3.18e-11 | -3.55e-12 |
| Natural Gas Prod. | Ethylbenzene | secondary | -3.20e-11 | -3.58e-12 |
| LCD incineration | Benzo[a]pyrene | secondary | -3.69e-11 | -4.13e-12 |
| Fuel Oil #4 Prod. | 3-Methylcholanthrene | secondary | -3.74e-11 | -4.18e-12 |
| Fuel Oil #4 Prod. | Vinyl acetate | secondary | -4.71e-11 | -5.27e-12 |
| Fuel Oil #4 Prod. | Styrene | secondary | -4.83e-11 | -5.40e-12 |
| LCD incineration | Pyrene | secondary | -5.06e-11 | -5.66e-12 |
| Fuel Oil #4 Prod. | Phenanthrene | secondary | -5.20e-11 | -5.81e-12 |
| Natural Gas Prod. | Chromium (III) | secondary | -5.33e-11 | -5.96e-12 |

## Table M-40. LCD LCIA Results for the Terrestrial Ecotoxicity Impact Category

| Process Group | Material | LCI Data Type | Terrestrial Toxicity (tox-kg) | % of Total |
|---|---|---|---|---|
| Natural Gas Prod. | 3-Methylcholanthrene | secondary | -5.59e-11 | -6.25e-12 |
| LCD incineration | indeno(1,2,3-cd)pyrene | secondary | -5.92e-11 | -6.62e-12 |
| Natural Gas Prod. | 2,4-Dinitrotoluene | secondary | -6.40e-11 | -7.16e-12 |
| LCD incineration | Fluoranthene | secondary | -6.52e-11 | -7.29e-12 |
| Fuel Oil #4 Prod. | Methyl tert-butyl ether | secondary | -6.62e-11 | -7.40e-12 |
| LCD incineration | Benzo[a]anthracene | secondary | -7.75e-11 | -8.67e-12 |
| Natural Gas Prod. | Chlorobenzene | secondary | -8.05e-11 | -9.00e-12 |
| LCD incineration | Fluorene | secondary | -8.35e-11 | -9.34e-12 |
| Natural Gas Prod. | Dichloromethane | secondary | -9.62e-11 | -1.08e-11 |
| LCD incineration | Chrysene | secondary | -9.68e-11 | -1.08e-11 |
| Natural Gas Prod. | Bromoform | secondary | -9.96e-11 | -1.11e-11 |
| Natural Gas Prod. | 1,2-Dichloroethane | secondary | -1.02e-10 | -1.14e-11 |
| LCD incineration | Benzo[b,j,k]fluoranthene | secondary | -1.06e-10 | -1.19e-11 |
| Natural Gas Prod. | Barium cmpds | secondary | -1.06e-10 | -1.19e-11 |
| Natural Gas Prod. | Methyl methacrylate | secondary | -1.22e-10 | -1.36e-11 |
| Natural Gas Prod. | Silicon | secondary | -1.23e-10 | -1.37e-11 |
| Fuel Oil #4 Prod. | Ethylbenzene | secondary | -1.32e-10 | -1.47e-11 |
| Natural Gas Prod. | Tetrachloroethylene | secondary | -1.40e-10 | -1.57e-11 |
| Natural Gas Prod. | Methyl ethyl ketone | secondary | -1.43e-10 | -1.60e-11 |
| Fuel Oil #4 Prod. | o-xylene | secondary | -1.43e-10 | -1.60e-11 |
| Natural Gas Prod. | Chlorine | secondary | -1.57e-10 | -1.75e-11 |
| LCD incineration | Acenaphthene | secondary | -1.67e-10 | -1.87e-11 |
| Natural Gas Prod. | Zinc (+2) | secondary | -1.74e-10 | -1.94e-11 |
| Natural Gas Prod. | Isophorone | secondary | -1.77e-10 | -1.98e-11 |
| Natural Gas Prod. | Dimethyl sulfate | secondary | -1.84e-10 | -2.06e-11 |
| Fuel Oil #4 Prod. | Chromium (III) | secondary | -2.04e-10 | -2.29e-11 |
| Fuel Oil #4 Prod. | Copper (+1 & +2) | secondary | -2.12e-10 | -2.37e-11 |
| Fuel Oil #4 Prod. | Aromatic hydrocarbons | secondary | -2.27e-10 | -2.54e-11 |
| LCD incineration | Acenaphthylene | secondary | -2.41e-10 | -2.70e-11 |
| Fuel Oil #4 Prod. | 2,4-Dinitrotoluene | secondary | -2.65e-10 | -2.96e-11 |
| Fuel Oil #4 Prod. | Chlorobenzene | secondary | -3.33e-10 | -3.72e-11 |
| Natural Gas Prod. | Di(2-ethylhexyl)phthalate | secondary | -3.85e-10 | -4.31e-11 |
| LCD incineration | Biphenyl | secondary | -3.90e-10 | -4.36e-11 |
| Fuel Oil #4 Prod. | Dichloromethane | secondary | -3.98e-10 | -4.45e-11 |
| LCD incineration | Acetophenone | secondary | -4.07e-10 | -4.55e-11 |
| Fuel Oil #4 Prod. | Bromoform | secondary | -4.12e-10 | -4.61e-11 |
| Fuel Oil #4 Prod. | 1,2-Dichloroethane | secondary | -4.20e-10 | -4.70e-11 |
| Natural Gas Prod. | Cadmium | secondary | -4.65e-10 | -5.20e-11 |
| Natural Gas Prod. | Propionaldehyde | secondary | -5.02e-10 | -5.61e-11 |
| Natural Gas Prod. | Acetaldehyde | secondary | -5.02e-10 | -5.61e-11 |
| Fuel Oil #4 Prod. | Methyl methacrylate | secondary | -5.04e-10 | -5.64e-11 |
| Fuel Oil #4 Prod. | Tetrachloroethylene | secondary | -5.81e-10 | -6.50e-11 |
| Fuel Oil #4 Prod. | Methyl ethyl ketone | secondary | -5.90e-10 | -6.60e-11 |
| Natural Gas Prod. | Mercury | secondary | -6.23e-10 | -6.97e-11 |
| Natural Gas Prod. | Methyl hydrazine | secondary | -6.53e-10 | -7.31e-11 |
| LCD incineration | Cumene | secondary | -6.53e-10 | -7.31e-11 |
| LCD incineration | Aluminum (elemental) | secondary | -7.02e-10 | -7.85e-11 |
| Fuel Oil #4 Prod. | 1,4-Dichlorobenzene | secondary | -7.13e-10 | -7.97e-11 |
| Fuel Oil #4 Prod. | Isophorone | secondary | -7.31e-10 | -8.18e-11 |

## Table M-40. LCD LCIA Results for the Terrestrial Ecotoxicity Impact Category

| Process Group | Material | LCI Data Type | Terrestrial Toxicity (tox-kg) | % of Total |
|---|---|---|---|---|
| Fuel Oil #4 Prod. | Dimethyl sulfate | secondary | -7.63e-10 | -8.53e-11 |
| LCD incineration | Ethyl Chloride | secondary | -7.72e-10 | -8.64e-11 |
| Natural Gas Prod. | Cobalt | secondary | -8.74e-10 | -9.78e-11 |
| Natural Gas Prod. | Methyl chloride | secondary | -9.03e-10 | -1.01e-10 |
| Natural Gas Prod. | Beryllium | secondary | -9.26e-10 | -1.04e-10 |
| Natural Gas Prod. | Aluminum (+3) | secondary | -9.48e-10 | -1.06e-10 |
| Natural Gas Prod. | 1,4-Dichlorobenzene | secondary | -1.07e-09 | -1.19e-10 |
| LCD incineration | 1,1,1-Trichloroethane | secondary | -1.09e-09 | -1.22e-10 |
| Natural Gas Prod. | Acrolein | secondary | -1.11e-09 | -1.25e-10 |
| Fuel Oil #4 Prod. | Cadmium cmpds | secondary | -1.12e-09 | -1.26e-10 |
| LCD incineration | Ethylene dibromide | secondary | -1.16e-09 | -1.29e-10 |
| Fuel Oil #4 Prod. | Toluene | secondary | -1.35e-09 | -1.50e-10 |
| Natural Gas Prod. | o-xylene | secondary | -1.52e-09 | -1.70e-10 |
| Fuel Oil #4 Prod. | Di(2-ethylhexyl)phthalate | secondary | -1.59e-09 | -1.78e-10 |
| Natural Gas Prod. | PM-10 | secondary | -1.63e-09 | -1.83e-10 |
| Fuel Oil #4 Prod. | Cadmium | secondary | -1.90e-09 | -2.12e-10 |
| Fuel Oil #4 Prod. | Mercury | secondary | -2.05e-09 | -2.30e-10 |
| Fuel Oil #4 Prod. | Propionaldehyde | secondary | -2.07e-09 | -2.32e-10 |
| Fuel Oil #4 Prod. | Acetaldehyde | secondary | -2.07e-09 | -2.32e-10 |
| Natural Gas Prod. | Chloroform | secondary | -2.09e-09 | -2.34e-10 |
| LCD incineration | Xylene (mixed isomers) | secondary | -2.22e-09 | -2.48e-10 |
| LCD incineration | Phenanthrene | secondary | -2.61e-09 | -2.91e-10 |
| Natural Gas Prod. | Benzyl chloride | secondary | -2.69e-09 | -3.01e-10 |
| Fuel Oil #4 Prod. | Methyl hydrazine | secondary | -2.70e-09 | -3.02e-10 |
| Natural Gas Prod. | Toluene | secondary | -2.86e-09 | -3.20e-10 |
| LCD incineration | Vinyl acetate | secondary | -2.86e-09 | -3.20e-10 |
| LCD incineration | Styrene | secondary | -2.93e-09 | -3.28e-10 |
| LCD incineration | Silicon | secondary | -3.07e-09 | -3.43e-10 |
| Fuel Oil #4 Prod. | Beryllium | secondary | -3.31e-09 | -3.71e-10 |
| Natural Gas Prod. | Carbon disulfide | secondary | -3.43e-09 | -3.84e-10 |
| Fuel Oil #4 Prod. | Methyl chloride | secondary | -3.73e-09 | -4.18e-10 |
| LCD incineration | Methyl tert-butyl ether | secondary | -4.01e-09 | -4.49e-10 |
| Fuel Oil #4 Prod. | Acrolein | secondary | -4.61e-09 | -5.15e-10 |
| Natural Gas Prod. | Phenol | secondary | -4.83e-09 | -5.40e-10 |
| Natural Gas Prod. | Nitrate | secondary | -4.98e-09 | -5.57e-10 |
| Fuel Oil #4 Prod. | Cobalt | secondary | -6.12e-09 | -6.85e-10 |
| LCD incineration | Chloroacetophenone | secondary | -6.74e-09 | -7.54e-10 |
| Natural Gas Prod. | Lead | secondary | -7.17e-09 | -8.02e-10 |
| LCD incineration | Ethylbenzene | secondary | -7.87e-09 | -8.80e-10 |
| Fuel Oil #4 Prod. | Chloroform | secondary | -8.65e-09 | -9.67e-10 |
| Natural Gas Prod. | Cyanide (-1) | secondary | -9.61e-09 | -1.07e-09 |
| Fuel Oil #4 Prod. | Aluminum (elemental) | secondary | -1.06e-08 | -1.19e-09 |
| Fuel Oil #4 Prod. | Benzyl chloride | secondary | -1.11e-08 | -1.24e-09 |
| LCD incineration | Chromium (III) | secondary | -1.13e-08 | -1.27e-09 |
| Natural Gas Prod. | Manganese | secondary | -1.31e-08 | -1.46e-09 |
| Fuel Oil #4 Prod. | Carbon disulfide | secondary | -1.42e-08 | -1.59e-09 |
| LCD incineration | Aluminum (+3) | secondary | -1.44e-08 | -1.61e-09 |
| LCD incineration | 2,4-Dinitrotoluene | secondary | -1.61e-08 | -1.80e-09 |
| Natural Gas Prod. | Copper | secondary | -1.75e-08 | -1.95e-09 |
| Natural Gas Prod. | Bromomethane | secondary | -1.83e-08 | -2.05e-09 |
| Natural Gas Prod. | 2-Chloroacetophenone | secondary | -1.85e-08 | -2.07e-09 |

## Table M-40. LCD LCIA Results for the Terrestrial Ecotoxicity Impact Category

| Process Group | Material | LCI Data Type | Terrestrial Toxicity (tox-kg) | % of Total |
|---|---|---|---|---|
| Natural Gas Prod. | Barium | secondary | -1.95e-08 | -2.18e-09 |
| LCD incineration | Chlorobenzene | secondary | -2.02e-08 | -2.26e-09 |
| Natural Gas Prod. | Hydrogen sulfide | secondary | -2.23e-08 | -2.49e-09 |
| LCD incineration | Dichloromethane | secondary | -2.41e-08 | -2.69e-09 |
| LCD incineration | Bromoform | secondary | -2.50e-08 | -2.79e-09 |
| LCD incineration | 1,2-Dichloroethane | secondary | -2.53e-08 | -2.83e-09 |
| Fuel Oil #4 Prod. | Barium cmpds | secondary | -2.57e-08 | -2.87e-09 |
| Fuel Oil #4 Prod. | Lead | secondary | -2.94e-08 | -3.29e-09 |
| LCD incineration | Methyl methacrylate | secondary | -3.06e-08 | -3.42e-09 |
| LCD incineration | Dimethylbenzanthracene | secondary | -3.12e-08 | -3.49e-09 |
| Natural Gas Prod. | Chromium (VI) | secondary | -3.13e-08 | -3.50e-09 |
| LCD incineration | Tetrachloroethylene | secondary | -3.50e-08 | -3.91e-09 |
| LCD incineration | Methyl ethyl ketone | secondary | -3.58e-08 | -4.00e-09 |
| Fuel Oil #4 Prod. | Barium | secondary | -3.61e-08 | -4.04e-09 |
| Fuel Oil #4 Prod. | Cyanide (-1) | secondary | -3.97e-08 | -4.44e-09 |
| Natural Gas Prod. | Nickel | secondary | -4.07e-08 | -4.55e-09 |
| LCD incineration | PM-10 | secondary | -4.08e-08 | -4.56e-09 |
| Natural Gas Prod. | Naphthalene | secondary | -4.31e-08 | -4.82e-09 |
| LCD incineration | Isophorone | secondary | -4.43e-08 | -4.96e-09 |
| LCD incineration | Dimethyl sulfate | secondary | -4.62e-08 | -5.17e-09 |
| Fuel Oil #4 Prod. | Silicon | secondary | -4.64e-08 | -5.19e-09 |
| LCD incineration | Toluene | secondary | -4.73e-08 | -5.29e-09 |
| Fuel Oil #4 Prod. | Manganese | secondary | -5.28e-08 | -5.91e-09 |
| Fuel Oil #4 Prod. | Naphthalene | secondary | -5.29e-08 | -5.91e-09 |
| Fuel Oil #4 Prod. | Dimethylbenzanthracene | secondary | -6.37e-08 | -7.12e-09 |
| LCD incineration | Cadmium | secondary | -6.38e-08 | -7.13e-09 |
| Fuel Oil #4 Prod. | Bromomethane | secondary | -7.56e-08 | -8.46e-09 |
| LCD incineration | Phenol | secondary | -7.60e-08 | -8.50e-09 |
| Fuel Oil #4 Prod. | 2-Chloroacetophenone | secondary | -7.64e-08 | -8.55e-09 |
| LCD incineration | Mercury | secondary | -8.42e-08 | -9.42e-09 |
| Fuel Oil #4 Prod. | Copper | secondary | -8.86e-08 | -9.90e-09 |
| Natural Gas Prod. | Dimethylbenzanthracene | secondary | -9.51e-08 | -1.06e-08 |
| LCD incineration | Di(2-ethylhexyl)phthalate | secondary | -9.66e-08 | -1.08e-08 |
| Fuel Oil #4 Prod. | Nitrate | secondary | -1.04e-07 | -1.17e-08 |
| Fuel Oil #4 Prod. | Chromium (VI) | secondary | -1.20e-07 | -1.34e-08 |
| LCD incineration | Cobalt | secondary | -1.24e-07 | -1.39e-08 |
| LCD incineration | Acetaldehyde | secondary | -1.26e-07 | -1.41e-08 |
| LCD incineration | Propionaldehyde | secondary | -1.26e-07 | -1.41e-08 |
| Natural Gas Prod. | Antimony | secondary | -1.47e-07 | -1.65e-08 |
| LCD incineration | Methyl hydrazine | secondary | -1.64e-07 | -1.83e-08 |
| LCD incineration | Beryllium | secondary | -1.94e-07 | -2.18e-08 |
| LCD incineration | Methyl chloride | secondary | -2.26e-07 | -2.53e-08 |
| Fuel Oil #4 Prod. | Aluminum (+3) | secondary | -2.29e-07 | -2.56e-08 |
| LCD incineration | Copper | secondary | -2.67e-07 | -2.99e-08 |
| LCD incineration | Acrolein | secondary | -2.79e-07 | -3.12e-08 |
| Fuel Oil #4 Prod. | Antimony | secondary | -4.21e-07 | -4.70e-08 |
| LCD incineration | Hexane | secondary | -4.88e-07 | -5.46e-08 |
| LCD incineration | Hydrogen sulfide | secondary | -5.13e-07 | -5.74e-08 |
| LCD incineration | Chloroform | secondary | -5.22e-07 | -5.84e-08 |

## Table M-40. LCD LCIA Results for the Terrestrial Ecotoxicity Impact Category

| Process Group | Material | LCI Data Type | Terrestrial Toxicity (tox-kg) | % of Total |
|---|---|---|---|---|
| Natural Gas Prod. | Hydrofluoric acid | secondary | -5.77e-07 | -6.45e-08 |
| Natural Gas Prod. | Phosphorus (yellow or white) | secondary | -5.86e-07 | -6.55e-08 |
| LCD incineration | Pentane | secondary | -6.12e-07 | -6.84e-08 |
| Fuel Oil #4 Prod. | PM-10 | secondary | -6.18e-07 | -6.91e-08 |
| LCD incineration | Benzyl chloride | secondary | -6.74e-07 | -7.54e-08 |
| LCD incineration | Ethane | secondary | -7.29e-07 | -8.16e-08 |
| Fuel Oil #4 Prod. | Nickel | secondary | -7.65e-07 | -8.55e-08 |
| Natural Gas Prod. | Molybdenum | secondary | -7.65e-07 | -8.56e-08 |
| LCD incineration | Carbon disulfide | secondary | -8.60e-07 | -9.62e-08 |
| LCD incineration | Barium | secondary | -8.87e-07 | -9.92e-08 |
| Fuel Oil #4 Prod. | Hexane | secondary | -9.00e-07 | -1.01e-07 |
| Fuel Oil #4 Prod. | Phenol | secondary | -1.16e-06 | -1.30e-07 |
| LCD incineration | Nitrate | secondary | -1.17e-06 | -1.30e-07 |
| Fuel Oil #4 Prod. | Pentane | secondary | -1.30e-06 | -1.45e-07 |
| LCD incineration | Naphthalene | secondary | -1.31e-06 | -1.47e-07 |
| Natural Gas Prod. | Hexane | secondary | -1.34e-06 | -1.50e-07 |
| Fuel Oil #4 Prod. | Ethane | secondary | -1.55e-06 | -1.73e-07 |
| Natural Gas Prod. | Pentane | secondary | -1.94e-06 | -2.17e-07 |
| Natural Gas Prod. | Ethane | secondary | -2.31e-06 | -2.59e-07 |
| Fuel Oil #4 Prod. | Zinc (elemental) | secondary | -2.35e-06 | -2.63e-07 |
| Fuel Oil #4 Prod. | Hydrofluoric acid | secondary | -2.38e-06 | -2.67e-07 |
| LCD incineration | Cyanide (-1) | secondary | -2.41e-06 | -2.69e-07 |
| Natural Gas Prod. | Zinc (elemental) | secondary | -2.81e-06 | -3.15e-07 |
| LCD incineration | Manganese | secondary | -3.17e-06 | -3.55e-07 |
| Natural Gas Prod. | Nitrous oxide | secondary | -3.82e-06 | -4.28e-07 |
| Natural Gas Prod. | Selenium | secondary | -4.02e-06 | -4.49e-07 |
| Fuel Oil #4 Prod. | Molybdenum | secondary | -4.28e-06 | -4.79e-07 |
| Natural Gas Prod. | Fluorides (F-) | secondary | -4.48e-06 | -5.01e-07 |
| LCD incineration | Bromomethane | secondary | -4.59e-06 | -5.13e-07 |
| LCD incineration | Nickel | secondary | -6.29e-06 | -7.04e-07 |
| LCD incineration | Molybdenum | secondary | -6.45e-06 | -7.21e-07 |
| LCD incineration | Chromium (VI) | secondary | -6.65e-06 | -7.44e-07 |
| Fuel Oil #4 Prod. | Ammonia | secondary | -7.26e-06 | -8.12e-07 |
| Fuel Oil #4 Prod. | Hydrogen sulfide | secondary | -8.41e-06 | -9.41e-07 |
| Natural Gas Prod. | Formaldehyde | secondary | -9.17e-06 | -1.03e-06 |
| LCD incineration | Antimony | secondary | -1.40e-05 | -1.56e-06 |
| LCD incineration | Zinc (elemental) | secondary | -1.65e-05 | -1.84e-06 |
| Fuel Oil #4 Prod. | Fluorides (F-) | secondary | -1.75e-05 | -1.95e-06 |
| Fuel Oil #4 Prod. | Selenium | secondary | -1.77e-05 | -1.98e-06 |
| Natural Gas Prod. | Hydrochloric acid | secondary | -2.11e-05 | -2.37e-06 |
| Natural Gas Prod. | Vanadium | secondary | -2.30e-05 | -2.58e-06 |
| Fuel Oil #4 Prod. | Phosphorus (yellow or white) | secondary | -2.63e-05 | -2.94e-06 |
| LCD incineration | Ammonia | secondary | -3.04e-05 | -3.40e-06 |
| LCD incineration | Phosphorus (yellow or white) | secondary | -3.56e-05 | -3.98e-06 |
| Fuel Oil #4 Prod. | Nitrous oxide | secondary | -4.08e-05 | -4.56e-06 |
| Fuel Oil #4 Prod. | Hydrochloric acid | secondary | -8.74e-05 | -9.77e-06 |
| Natural Gas Prod. | Ammonia | secondary | -8.90e-05 | -9.96e-06 |
| Natural Gas Prod. | Sulfur oxides | secondary | -9.13e-05 | -1.02e-05 |
| Natural Gas Prod. | Arsenic | secondary | -1.04e-04 | -1.17e-05 |
| Natural Gas Prod. | PM | secondary | -1.37e-04 | -1.53e-05 |
| LCD incineration | Hydrofluoric acid | secondary | -1.45e-04 | -1.62e-05 |

## Table M-40. LCD LCIA Results for the Terrestrial Ecotoxicity Impact Category

| Process Group | Material | LCI Data Type | Terrestrial Toxicity (tox-kg) | % of Total |
|---|---|---|---|---|
| Fuel Oil #4 Prod. | PM | secondary | -2.87e-04 | -3.21e-05 |
| LCD incineration | Formaldehyde | secondary | -2.89e-04 | -3.24e-05 |
| Fuel Oil #4 Prod. | Formaldehyde | secondary | -3.65e-04 | -4.08e-05 |
| Fuel Oil #4 Prod. | Arsenic | secondary | -5.00e-04 | -5.59e-05 |
| LCD incineration | Nitrous oxide | secondary | -6.75e-04 | -7.55e-05 |
| LCD incineration | Vanadium | secondary | -7.59e-04 | -8.49e-05 |
| LCD incineration | Selenium | secondary | -9.94e-04 | -1.11e-04 |
| LCD incineration | Fluorides (F-) | secondary | -1.01e-03 | -1.13e-04 |
| Fuel Oil #4 Prod. | Nitrogen oxides | secondary | -1.27e-03 | -1.43e-04 |
| Fuel Oil #4 Prod. | Benzene | secondary | -1.71e-03 | -1.91e-04 |
| Fuel Oil #4 Prod. | Sulfur oxides | secondary | -1.74e-03 | -1.94e-04 |
| Fuel Oil #4 Prod. | Methane | secondary | -1.85e-03 | -2.07e-04 |
| LCD incineration | Benzene | secondary | -2.08e-03 | -2.32e-04 |
| Fuel Oil #4 Prod. | Vanadium | secondary | -2.86e-03 | -3.20e-04 |
| LCD incineration | Hydrochloric acid | secondary | -3.08e-03 | -3.44e-04 |
| Natural Gas Prod. | Nitrogen oxides | secondary | -3.09e-03 | -3.45e-04 |
| LCD incineration | Nitrogen oxides | secondary | -9.31e-03 | -1.04e-03 |
| LCD incineration | Methane | secondary | -9.85e-03 | -1.10e-03 |
| Fuel Oil #4 Prod. | Carbon monoxide | secondary | -9.96e-03 | -1.11e-03 |
| LCD incineration | PM | secondary | -1.20e-02 | -1.34e-03 |
| LCD incineration | Carbon monoxide | secondary | -1.44e-02 | -1.61e-03 |
| Natural Gas Prod. | Methane | secondary | -1.66e-02 | -1.86e-03 |
| LCD incineration | Sulfur oxides | secondary | -1.75e-02 | -1.96e-03 |
| Natural Gas Prod. | Carbon monoxide | secondary | -2.11e-02 | -2.36e-03 |
| LCD incineration | Arsenic | secondary | -2.50e-02 | -2.80e-03 |
| Natural Gas Prod. | Benzene | secondary | -2.50e-02 | -2.80e-03 |
| **Total End-of-life** | | | **1.46e-02** | **1.63e-03** |
| **Total All Life-cycle Stages** | | | **8.94e+02** | **1.00e+02** |

this page intentionally left blank

# APPENDIX N

## CHAPTER 4 SUPPORTING TABLES

this page intentionally left blank

## Table N-1. CRT Lead Inputs by Life-cycle Stage

| Life-cycle Stage | Process | Input | Quantity | Units | Type |
|---|---|---|---|---|---|
| Materials Processing | Aluminum Prod. (all virgin; EB) | Lead (Pb, ore) | 6.30e-05 | kg | Ancillary material |
| Materials Processing | Ferrite mfg. (EB) | Lead (Pb, ore) | 5.70e-08 | kg | Ancillary material |
| Materials Processing | Invar (DEAM mix) | Lead (Pb, ore) | 5.84e-08 | kg | Ancillary material |
| Materials Processing | Lead (EB) | Lead (Pb, ore) | 4.96e-01 | kg | Primary material |
| Materials Processing | Polycarbonate Production (PC; DEAM) | Lead (Pb, ore) | 1.85e-06 | kg | Ancillary material |
| Materials Processing | Steel Prod., cold-rolled, semi-finished (EB) | Lead (Pb, ore) | 5.79e-08 | kg | Ancillary material |
| Manufacturing | CRT tube mfg. (CDP) | Frit | 6.67e-02 | kg | Primary material |
| Manufacturing | CRT glass mfg. (CDP) | Lead | 4.47e-01 | kg | Primary material |
| Manufacturing | Frit manufacturing (CDP) | Lead | 4.67e-02 | kg | Primary material |
| Manufacturing | CRT monitor assembly (CDP) | Printed wiring board (PWB) | 8.47e-01 | kg | Direct to assembly |
| Manufacturing | PWB Mfg. | Solder (63% tin; 37% lead) | 5.08e-02 | kg | Primary material |
| Manufacturing | CRT monitor assembly (CDP) | Solder, unspecified | 2.67e-02 | kg | Direct to assembly |
| End-of-life | CRT Incineration (DEAM mix) | EOL CRT Monitor, incinerated | 2.20e+01 | kg | Primary material |
| End-of-life | CRT landfilling (CDP) | EOL CRT Monitor, landfilled | 1.56e+01 | kg | Primary material |
| End-of-life | CRT Recycling (CDP) | EOL CRT Monitor, recycled | 2.42e+00 | kg | Primary material |

## Table N-2. LCD Lead Inputs by Life-cycle Stage

| Life-cycle Stage | Process | Input | Quantity | Units | Type |
|---|---|---|---|---|---|
| Materials Processing | Aluminum Prod. (all virgin; EB) | Lead (Pb, ore) | 2.35e-05 | kg | Ancillary material |
| Materials Processing | PET Resin Production (DEAM) | Lead (Pb, ore) | 1.82e-07 | kg | Ancillary material |
| Materials Processing | Polycarbonate Production (PC; DEAM) | Lead (Pb, ore) | 1.03e-06 | kg | Ancillary material |
| Materials Processing | Steel Prod., cold-rolled, semi-finished (EB) | Lead (Pb, ore) | 2.84e-08 | kg | Ancillary material |
| Manufacturing | LCD module mfg. (CDP) | Printed wiring board (PWB) | 2.27e-02 | kg | Direct to assembly |
| Manufacturing | LCD monitor assembly (CDP) | Printed wiring board (PWB) | 3.51e-01 | kg | Direct to assembly |
| Manufacturing | LCD monitor assembly (CDP) | Solder (60% tin, 40% lead) | 3.81e-02 | kg | Primary material |
| Manufacturing | PWB Mfg. | Solder (63% tin; 37% lead) | 2.24e-02 | kg | Primary material |
| Manufacturing | LCD module mfg. (CDP) | Solder, unspecified | 7.35e-05 | kg | Ancillary material |
| End-of-life | LCD incineration (DEAM mix) | EOL LCD Monitor, incinerated | 6.50e+00 | kg | Primary material |
| End-of-life | LCD landfilling (CDP) | EOL LCD Monitor, landfilled | 3.57e+00 | kg | Primary material |
| End-of-life | LCD recycling (CDP) | EOL LCD Monitor, recycled | 9.75e-01 | kg | Primary material |

## Table N-3. CRT Lead Outputs by Life-cycle Stage

| Life-Cycle Stage | Process | Output | Quantity | Units | Type | Disposition |
|---|---|---|---|---|---|---|
| Materials Processing | ABS Production (DEAM) | Lead | 2.12e-07 | kg | Airborne | air |
| Materials Processing | Aluminum Prod. (all virgin; EB) | Lead | 1.20e-06 | kg | Airborne | air |
| Materials Processing | Aluminum Prod. (all virgin; EB) | Lead | 1.45e-08 | kg | Solid waste | landfill |
| Materials Processing | Aluminum Prod. (all virgin; EB) | Lead cmpds | 8.72e-06 | kg | Waterborne | surface water |
| Materials Processing | Ferrite mfg. (EB) | Lead | 3.46e-05 | kg | Airborne | air |
| Materials Processing | Ferrite mfg. (EB) | Lead | 1.70e-10 | kg | Solid waste | landfill |
| Materials Processing | Ferrite mfg. (EB) | Lead cmpds | 5.19e-07 | kg | Waterborne | surface water |
| Materials Processing | Ferrite mfg. (EB) | Lead-210 (isotope) | 1.82e-01 | Bq | Radioactivity | air |
| Materials Processing | Invar (DEAM mix) | Lead | 3.62e-05 | kg | Airborne | air |
| Materials Processing | Invar (DEAM mix) | Lead | 5.49e-09 | kg | Solid waste | landfill |
| Materials Processing | Invar (DEAM mix) | Lead cmpds | 2.98e-06 | kg | Waterborne | surface water |
| Materials Processing | Invar (DEAM mix) | Lead-210 (isotope) | 1.87e-01 | Bq | Radioactivity | air |
| Materials Processing | Lead (EB) | Lead | 1.58e-03 | kg | Airborne | air |
| Materials Processing | Lead (EB) | Lead | 2.72e-09 | kg | Solid waste | landfill |
| Materials Processing | Lead (EB) | Lead cmpds | 2.75e-06 | kg | Waterborne | surface water |
| Materials Processing | Polycarbonate Production (PC; DEAM) | Lead | 4.62e-07 | kg | Airborne | air |
| Materials Processing | Steel Prod., cold-rolled, semi-finished (EB) | Lead | 1.10e-06 | kg | Airborne | air |
| Materials Processing | Steel Prod., cold-rolled, semi-finished (EB) | Lead | 1.02e-11 | kg | Solid waste | landfill |
| Materials Processing | Steel Prod., cold-rolled, semi-finished (EB) | Lead cmpds | 8.83e-07 | kg | Waterborne | surface water |
| Materials Processing | Steel Prod., cold-rolled, semi-finished (EB) | Lead-210 (isotope) | 6.54e-01 | Bq | Radioactivity | air |
| Materials Processing | Styrene-butadiene Copolymer Prod. (DEAM mix) | Lead | 2.07e-07 | kg | Airborne | air |
| Manufacturing | CRT glass mfg. (CDP) | Broken CRT glass | 1.88e-03 | kg | Hazardous waste | landfill |
| Manufacturing | CRT glass mfg. (CDP) | cinders from CRT glass mfg (70% PbO) | 8.26e-03 | kg | Hazardous waste | landfill |
| Manufacturing | CRT glass mfg. (CDP) | CRT glass faceplate EP dust (Pb) (D008 waste) | 1.03e-03 | kg | Hazardous waste | landfill |
| Manufacturing | CRT glass mfg. (CDP) | CRT glass funnel EP dust (Pb) (D008 waste) | 5.01e-03 | kg | Hazardous waste | recycling/reuse |
| Manufacturing | CRT glass mfg. (CDP) | Hazardous sludge (Pb) (D008) | 1.52e-03 | kg | Hazardous waste | landfill |
| Manufacturing | CRT glass mfg. (CDP) | Lead | 3.22e-07 | kg | Airborne | air |
| Manufacturing | CRT glass mfg. (CDP) | Lead | 4.34e-05 | kg | Waterborne | surface water |
| Manufacturing | CRT glass mfg. (CDP) | Lead contaminated grit (D008 waste) | 3.46e-05 | kg | Hazardous waste | landfill |
| Manufacturing | CRT glass mfg. (CDP) | Lead debris (D008 waste) | 2.14e-04 | kg | Hazardous waste | landfill |

## Table N-3. CRT Lead Outputs by Life-cycle Stage

| Life-Cycle Stage | Process | Output | Quantity | Units | Type | Disposition |
|---|---|---|---|---|---|---|
| Manufacturing | CRT glass mfg. (CDP) | sludge from CRT glass mfg (1% PbO) | 8.78e-04 | kg | Hazardous waste | landfill |
| Manufacturing | CRT glass mfg. (CDP) | Waste Batch (Ba, Pb) (D008 waste) | 1.41e-03 | kg | Hazardous waste | landfill |
| Manufacturing | CRT glass mfg. (CDP) | Waste finishing sludge (Pb) (D008 waste) | 2.56e-04 | kg | Hazardous waste | landfill |
| Manufacturing | CRT monitor assembly (CDP) | Broken CRT glass | 3.82e-01 | kg | Solid waste | recycling/reuse |
| Manufacturing | CRT monitor assembly (CDP) | Printed wiring board (PWB) | 3.70e-02 | kg | Solid waste | recycling/reuse |
| Manufacturing | CRT tube mfg. (CDP) | Broken CRT glass | 6.94e-01 | kg | Solid waste | recycling/reuse |
| Manufacturing | CRT tube mfg. (CDP) | Frit | 2.99e-03 | kg | Hazardous waste | landfill |
| Manufacturing | CRT tube mfg. (CDP) | Lead | 3.01e-06 | kg | Waterborne | surface water |
| Manufacturing | CRT tube mfg. (CDP) | Lead | 1.03e-06 | kg | Waterborne | treatment |
| Manufacturing | CRT tube mfg. (CDP) | Lead sulfate cake | 2.67e-05 | kg | Hazardous waste | landfill |
| Manufacturing | Frit manufacturing (CDP) | Lead | 3.20e-10 | kg | Airborne | air |
| Manufacturing | Fuel Oil #2 Prod. (DEAM) | Lead | 3.88e-08 | kg | Airborne | air |
| Manufacturing | Fuel Oil #2 Prod. (DEAM) | Lead cmpds | 3.28e-12 | kg | Waterborne | surface water |
| Manufacturing | Fuel Oil #4 Prod. (DEAM mix) | Lead | 4.14e-09 | kg | Airborne | air |
| Manufacturing | Fuel Oil #4 Prod. (DEAM mix) | Lead cmpds | 2.66e-13 | kg | Waterborne | surface water |
| Manufacturing | Fuel Oil #6 Prod. (DEAM) | Lead | 9.99e-08 | kg | Airborne | air |
| Manufacturing | Fuel Oil #6 Prod. (DEAM) | Lead cmpds | 3.95e-12 | kg | Waterborne | surface water |
| Manufacturing | Japanese Electric Grid | Lead (Pb, ore) | 4.41e-07 | kg | Airborne | air |
| Manufacturing | LPG Production (DEAM) | Lead | 1.24e-05 | kg | Airborne | air |
| Manufacturing | LPG Production (DEAM) | Lead cmpds | 1.17e-09 | kg | Waterborne | surface water |
| Manufacturing | Natural Gas Prod. (DEAM) | Lead | 2.17e-08 | kg | Airborne | air |
| Manufacturing | Natural Gas Prod. (DEAM) | Lead cmpds | 2.36e-14 | kg | Waterborne | surface water |
| Manufacturing | PWB Mfg. | Lead cmpds | 1.62e-05 | kg | Waterborne | treatment |
| Manufacturing | PWB Mfg. | PWB-Solder dross | 6.70e-02 | kg | Hazardous waste | recycling/reuse |
| Manufacturing | US electric grid | Lead | 2.04e-07 | kg | Airborne | air |
| Use | CRT monitor use (CDP) | EOL CRT Monitor, landfilled | 1.01e+01 | kg | Hazardous waste | treatment |
| Use | CRT monitor use (CDP) | EOL CRT Monitor, landfilled | 2.12e+01 | kg | Solid waste | treatment |
| Use | CRT monitor use (CDP) | EOL CRT Monitor, recycled | 2.42e+00 | kg | Solid waste | treatment |
| Use | CRT monitor use (CDP) | EOL CRT Monitor, remanufactured | 6.60e-01 | kg | Solid waste | recycling/reuse |
| Use | US electric grid | Lead | 1.28e-05 | kg | Airborne | air |

## Table N-3. CRT Lead Outputs by Life-cycle Stage

| Life-Cycle Stage | Process | Output | Quantity | Units | Type | Disposition |
|---|---|---|---|---|---|---|
| End-of-life | CRT Incineration (DEAM mix) | Lead | 1.43e-05 | kg | Airborne | air |
| End-of-life | CRT Incineration (DEAM mix) | Lead cmpds | 8.11e-10 | kg | Waterborne | surface water |
| End-of-life | CRT landfilling (CDP) | EOL CRT Monitor, landfilled | 3.91e+00 | kg | Solid waste | landfill |
| End-of-life | CRT landfilling (CDP) | Lead cmpds | 7.90e-10 | kg | Waterborne | surface water |
| End-of-life | CRT Recycling (CDP) | Printed wiring board (PWB) | 1.46e-01 | kg | Hazardous waste | recycling/reuse |
| End-of-life | Fuel Oil #4 Prod. (DEAM mix) | Lead | -4.45e-08 | kg | Airborne | air |
| End-of-life | Fuel Oil #4 Prod. (DEAM mix) | Lead cmpds | -2.86e-12 | kg | Waterborne | surface water |
| End-of-life | LPG Production (DEAM) | Lead | 1.07e-10 | kg | Airborne | air |
| End-of-life | LPG Production (DEAM) | Lead cmpds | 1.01e-14 | kg | Waterborne | surface water |
| End-of-life | Natural Gas Prod. (DEAM) | Lead | -1.09e-08 | kg | Airborne | air |
| End-of-life | Natural Gas Prod. (DEAM) | Lead cmpds | -1.18e-14 | kg | Waterborne | surface water |
| End-of-life | US electric grid | Lead | 1.28e-09 | kg | Airborne | air |

## Table N-4. LCD Lead Outputs by Life-cycle Stage

| Life-cycle Stage | Process | Output | Quantity | Units | Type | Disposition |
|---|---|---|---|---|---|---|
| Materials Processing | Aluminum Prod. (all virgin; EB) | Lead | 4.47e-07 | kg | Airborne | air |
| Materials Processing | Aluminum Prod. (all virgin; EB) | Lead | 5.41e-09 | kg | Solid waste | landfill |
| Materials Processing | Aluminum Prod. (all virgin; EB) | Lead cmpds | 3.25e-06 | kg | Waterborne | surface water |
| Materials Processing | Natural Gas Prod. (DEAM) | Lead | 1.51e-06 | kg | Airborne | air |
| Materials Processing | Natural Gas Prod. (DEAM) | Lead cmpds | 1.65e-12 | kg | Waterborne | surface water |
| Materials Processing | PET Resin Production (DEAM) | Lead | 9.08e-08 | kg | Airborne | air |
| Materials Processing | PMMA Sheet Prod. (DEAM) | Lead | 1.92e-07 | kg | Airborne | air |
| Materials Processing | Polycarbonate Production (PC; DEAM) | Lead | 2.58e-07 | kg | Airborne | air |
| Materials Processing | Steel Prod., cold-rolled, semi-finished (EB) | Lead | 5.40e-07 | kg | Airborne | air |
| Materials Processing | Steel Prod., cold-rolled, semi-finished (EB) | Lead | 4.98e-12 | kg | Solid waste | landfill |
| Materials Processing | Steel Prod., cold-rolled, semi-finished (EB) | Lead cmpds | 4.33e-07 | kg | Waterborne | surface water |
| Materials Processing | Steel Prod., cold-rolled, semi-finished (EB) | Lead-210 (isotope) | 3.21e-01 | Bq | Radioactivity | air |
| Materials Processing | Styrene-butadiene Copolymer Prod. (DEAM mix) | Lead | 9.04e-08 | kg | Airborne | air |
| Manufacturing | Fuel Oil #2 Prod. (DEAM) | Lead | 1.81e-09 | kg | Airborne | air |
| Manufacturing | Fuel Oil #2 Prod. (DEAM) | Lead cmpds | 1.53e-13 | kg | Waterborne | surface water |
| Manufacturing | Fuel Oil #4 Prod. (DEAM mix) | Lead | 6.38e-09 | kg | Airborne | air |
| Manufacturing | Fuel Oil #4 Prod. (DEAM mix) | Lead cmpds | 4.10e-13 | kg | Waterborne | surface water |
| Manufacturing | Fuel Oil #6 Prod. (DEAM) | Lead | 3.40e-09 | kg | Airborne | air |
| Manufacturing | Fuel Oil #6 Prod. (DEAM) | Lead cmpds | 1.34e-13 | kg | Waterborne | surface water |
| Manufacturing | Japanese Electric Grid | Lead (Pb, ore) | 1.48e-06 | kg | Airborne | air |
| Manufacturing | LCD backlight unit assembly (CDP) | Waste CCFL, with lead | 8.17e-08 | kg | Hazardous waste | treatment |
| Manufacturing | LCD CCFL mfg. (CDP) | Lead | 8.33e-07 | kg | Waterborne | treatment |
| Manufacturing | LCD glass mfg. (CDP) | Lead | 2.01e-06 | kg | Waterborne | surface water |
| Manufacturing | LCD glass mfg. (CDP) | Waste Batch (Ba, Pb) (D008 waste) | 6.55e-05 | kg | Hazardous waste | landfill |
| Manufacturing | LCD module mfg. (CDP) | Lead | 6.17e-06 | kg | Waterborne | surface water |
| Manufacturing | LCD monitor assembly (CDP) | Printed wiring board (PWB) | 7.50e-03 | kg | Solid waste | landfill |
| Manufacturing | LPG Production (DEAM) | Lead | 5.93e-07 | kg | Airborne | air |
| Manufacturing | LPG Production (DEAM) | Lead cmpds | 5.60e-11 | kg | Waterborne | surface water |
| Manufacturing | Natural Gas Prod. (DEAM) | Lead | 3.42e-08 | kg | Airborne | air |
| Manufacturing | Natural Gas Prod. (DEAM) | Lead cmpds | 3.72e-14 | kg | Waterborne | surface water |

## Table N-4. LCD Lead Outputs by Life-cycle Stage

| Life-cycle Stage | Process | Output | Quantity | Units | Type | Disposition |
|---|---|---|---|---|---|---|
| Manufacturing | PWB Mfg. | Lead cmpds | 7.14e-06 | kg | Waterborne | treatment |
| Manufacturing | PWB Mfg. | PWB-Lead contaminated waste oil | 5.14e-03 | kg | Hazardous waste | treatment |
| Manufacturing | PWB Mfg. | PWB-Solder dross | 2.96e-02 | kg | Hazardous waste | recycling/reuse |
| Manufacturing | US electric grid | Lead | 2.47e-08 | kg | Airborne | air |
| Use | LCD monitor use (CDP) | EOL LCD Monitor, incinerated | 9.75e-01 | kg | Solid waste | treatment |
| Use | LCD monitor use (CDP) | EOL LCD Monitor, landfilled | 3.25e-01 | kg | Hazardous waste | treatment |
| Use | LCD monitor use (CDP) | EOL LCD Monitor, landfilled | 6.82e+00 | kg | Solid waste | treatment |
| Use | LCD monitor use (CDP) | EOL LCD Monitor, recycled | 9.75e-01 | kg | Solid waste | treatment |
| Use | LCD monitor use (CDP) | EOL LCD Monitor, remanufactured | 9.75e-01 | kg | Solid waste | recycling/reuse |
| Use | US electric grid | Lead | 4.76e-06 | kg | Airborne | air |
| End-of-life | Fuel Oil #4 Prod. (DEAM mix) | Lead | -2.90e-08 | kg | Airborne | air |
| End-of-life | Fuel Oil #4 Prod. (DEAM mix) | Lead cmpds | -1.90e-12 | kg | Waterborne | surface water |
| End-of-life | LCD incineration (DEAM mix) | Lead | 4.80e-06 | kg | Airborne | air |
| End-of-life | LCD incineration (DEAM mix) | Lead cmpds | 2.59e-10 | kg | Waterborne | surface water |
| End-of-life | LCD landfilling (CDP) | EOL LCD Monitor, landfilled | 8.94e-01 | kg | Solid waste | landfill |
| End-of-life | LCD landfilling (CDP) | EOL LCD Monitor, landfilled | 1.64e+00 | kg | Hazardous waste | landfill |
| End-of-life | LCD landfilling (CDP) | Lead cmpds | 2.40e-10 | kg | Waterborne | surface water |
| End-of-life | LPG Production (DEAM) | Lead | 4.87e-11 | kg | Airborne | air |
| End-of-life | LPG Production (DEAM) | Lead cmpds | 4.60e-15 | kg | Waterborne | surface water |
| End-of-life | Natural Gas Prod. (DEAM) | Lead | -7.20e-09 | kg | Airborne | air |
| End-of-life | Natural Gas Prod. (DEAM) | Lead cmpds | -7.80e-15 | kg | Waterborne | surface water |
| End-of-life | US electric grid | Lead | 9.03e-10 | kg | Airborne | air |

## Table N-5. CRT Life-Cycle Impacts Scores from Lead-based Materials

| Life-cycle Stage | Process | Input/Output | Impact Scores by Category | | | | | | |
|---|---|---|---|---|---|---|---|---|---|
| | | | Nonrenew. | Haz. Waste | Rad | ChrTox-pub | ChrTox-occ | Aq. Tox. | Terr. Tox. |
| MP | ABS Production (DEAM) | Lead | | | | 4.24e-07 | | | 2.12e-07 |
| MP | Aluminum Prod. (all virgin; EB) | Lead | | | | 2.40e-06 | | | 1.20e-06 |
| MP | Ferrite mfg. (EB) | Lead | | | | 6.92e-05 | | | 3.46e-05 |
| MP | Invar (DEAM mix) | Lead | | | | 7.24e-05 | | | 3.62e-05 |
| MP | Lead (EB) | Lead | | | | 3.16e-03 | | | 1.58e-03 |
| MP | Polycarbonate Production (PC; DEAM) | Lead | | | | 9.23e-07 | | | 4.62e-07 |
| MP | Steel Prod., cold-rolled, semi-finished (EB) | Lead | | | | 2.20e-06 | | | 1.10e-06 |
| MP | Styrene-butadiene Copolymer Prod. (DEAM | Lead | | | | 4.14e-07 | | | 2.07e-07 |
| MP | Aluminum Prod. (all virgin; EB) | Lead (Pb, ore) | 6.30e-05 | | | | | | |
| MP | Ferrite mfg. (EB) | Lead (Pb, ore) | 5.70e-08 | | | | | | |
| MP | Invar (DEAM mix) | Lead (Pb, ore) | 5.84e-08 | | | | | | |
| MP | Lead (EB) | Lead (Pb, ore) | 4.96e-01 | | | | | | |
| MP | Polycarbonate Production (PC; DEAM) | Lead (Pb, ore) | 1.85e-06 | | | | | | |
| MP | Steel Prod., cold-rolled, semi-finished (EB) | Lead (Pb, ore) | 5.79e-08 | | | | | | |
| MP | Aluminum Prod. (all virgin; EB) | Lead cmpds | | | | 1.74e-05 | | 1.70e-04 | 8.72e-06 |
| MP | Ferrite mfg. (EB) | Lead cmpds | 1.04e-06 | 1.00e-05 | 5.19e-07 | | | | |
| MP | Invar (DEAM mix) | Lead cmpds | | | | 5.96e-06 | | 5.90e-05 | 2.98e-06 |
| MP | Lead (EB) | Lead cmpds | | | | 5.50e-06 | | 5.40e-05 | 2.75e-06 |
| MP | Steel Prod., cold-rolled, semi-finished (EB) | Lead cmpds | | | | 1.77e-06 | | 1.70e-05 | 8.83e-07 |
| MP | Ferrite mfg. (EB) | Lead-210 (isotope) | | | 1.82e-01 | | | | |
| MP | Invar (DEAM mix) | Lead-210 (isotope) | | | 1.87e-01 | | | | |
| MP | Steel Prod., cold-rolled, semi-finished (EB) | Lead-210 (isotope) | | | 6.54e-01 | | | | |
| Manufacturing | CRT glass mfg. (CDP) | Broken CRT glass | | 6.22e-07 | | | | | |
| Manufacturing | CRT glass mfg. (CDP) | cinders from CRT glass mfg (70% PbO) | | 6.88e-06 | | | | | |
| Manufacturing | CRT glass mfg. (CDP) | CRT glass faceplate EP dust (Pb) (D008 waste) | | 2.15e-06 | | | | | |
| Manufacturing | CRT tube mfg. (CDP) | Frit | | 3.04e-06 | | | | | |
| Manufacturing | CRT glass mfg. (CDP) | Hazardous sludge (Pb) | | 1.38e-06 | | | | | |
| Manufacturing | CRT glass mfg. (CDP) | Lead | 4.47e-01 | | | 8.74e-05 | 8.95e-01 | 8.70e-05 | 4.37e-05 |

# Table N-5. CRT Life-Cycle Impacts Scores from Lead-based Materials

| Life-cycle Stage | Process | Input/Output | Impact Scores by Category | | | | | | |
|---|---|---|---|---|---|---|---|---|---|
| | | | Nonrenew. | Haz. Waste | Rad | ChrTox-pub | ChrTox- occ | Aq. Tox. | Terr. Tox. |
| Manufacturing | CRT tube mfg. (CDP) | Lead | | | | 6.03e-06 | | 6.00e-06 | 3.01e-06 |
| Manufacturing | Frit manufacturing (CDP) | Lead | 4.67e-02 | | | 6.40e-10 | 9.33e-02 | | 3.20e-10 |
| Manufacturing | Fuel Oil #2 Prod. (DEAM) | Lead | | | | 7.76e-08 | | | 3.88e-08 |
| Manufacturing | Fuel Oil #4 Prod. (DEAM mix) | Lead | | | | 8.28e-09 | | | 4.14e-09 |
| Manufacturing | Fuel Oil #6 Prod. (DEAM) | Lead | | | | 2.00e-07 | | | 9.99e-08 |
| Manufacturing | LPG Production (DEAM) | Lead | | | | 2.47e-05 | | | 1.24e-05 |
| Manufacturing | Natural Gas Prod. (DEAM) | Lead | | | | 4.33e-08 | | | 2.17e-08 |
| Manufacturing | US electric grid | Lead | | | | 4.07e-07 | | | 2.04e-07 |
| Manufacturing | Fuel Oil #2 Prod. (DEAM) | Lead cmpds | | | | 6.55e-12 | | 6.50e-11 | 3.27e-12 |
| Manufacturing | Fuel Oil #4 Prod. (DEAM mix) | Lead cmpds | | 5.32e-13 | 5.2E- | | | | |
| Manufacturing | Fuel Oil #6 Prod. (DEAM) | Lead cmpds | | | | 7.89e-12 | | 7.80e-11 | 3.95e-12 |
| Manufacturing | LPG Production (DEAM) | Lead cmpds | | | | 2.33e-09 | | 2.30e-08 | 1.17e-09 |
| Manufacturing | Natural Gas Prod. (DEAM) | Lead cmpds | | | | 4.72e-14 | | 4.60e-13 | 2.36e-14 |
| Manufacturing | CRT glass mfg. (CDP) | Lead contaminated grit (D008 waste) | | 2.99e-09 | | | | | |
| Manufacturing | CRT glass mfg. (CDP) | Lead debris (D008 waste) | | 1.85e-08 | | | | | |
| Manufacturing | CRT tube mfg. (CDP) | Lead sulfate cake | | 3.03e-08 | | | | | |
| Manufacturing | CRT glass mfg. (CDP) | sludge from CRT glass mfg (1% PbO) | | 6.45e-07 | | | | | |
| Manufacturing | CRT glass mfg. (CDP) | Waste Batch (Ba, Pb) (D008 waste) | | 1.22e-07 | | | | | |
| Manufacturing | CRT glass mfg. (CDP) | Waste finishing sludge (Pb) (D008 waste) | | 2.32e-07 | | | | | |
| Use | US electric grid | Lead | | | | 2.55e-05 | | | 1.27e-05 |
| End-of-life | CRT Incineration (DEAM mix) | Lead | | 2.86e-05 | 1.43e-05 | | | | |
| End-of-life | Fuel Oil #4 Prod. (DEAM mix) | Lead | | | | -8.90e-08 | | | -4.40e-08 |
| End-of-life | LPG Production (DEAM) | Lead | | | | 2.13e-10 | | | 1.07e-10 |
| End-of-life | Natural Gas Prod. (DEAM) | Lead | | | | -2.17e-08 | | | -1.10e-08 |
| End-of-life | US electric grid | Lead | | | | 2.55e-09 | | | 1.28e-09 |
| End-of-life | CRT Incineration (DEAM mix) | Lead cmpds | | | | 1.62e-09 | | 1.60e-08 | 8.10e-10 |
| End-of-life | CRT landfilling (CDP) | Lead cmpds | | | | 1.58e-09 | | 1.60e-08 | 7.89e-10 |

## Table N-5. CRT Life-Cycle Impacts Scores from Lead-based Materials

| Life-cycle Stage | Process | Input/Output | Impact Scores by Category | | | | | | |
|---|---|---|---|---|---|---|---|---|---|
| | | | Nonrenew. | Haz. Waste | Rad | ChrTox-pub | ChrTox- occ | Aq. Tox. | Terr. Tox. |
| End-of-life | Fuel Oil #4 Prod. (DEAM mix) | Lead cmpds | | | | -5.72e-12 | | -5.60e-11 | -2.90e-12 |
| End-of-life | LPG Production (DEAM) | Lead cmpds | | | | 2.01e-14 | | 2.00e-13 | 1.01e-14 |
| End-of-life | Natural Gas Prod. (DEAM) | Lead cmpds | | | | -2.37e-14 | | -2.30e-13 | -1.20e-14 |

MP = Materials processing.
Blank = not applicable.

## Table N-6. LCD Life-Cycle Impact Scores from Lead-based Materials

| Life-cycle Stage | Process | Input/Output | Impact Scores by Category | | | | | | |
|---|---|---|---|---|---|---|---|---|---|
| | | | Nonrenew | Haz. Waste | Solid Waste | Rad | ChrTox-pub | Aq. Tox. | Terr. Tox. |
| MP | Aluminum Prod. (all virgin; EB) | Lead | | | | | 8.94e-07 | | 4.47e-07 |
| MP | Natural Gas Prod. (DEAM) | Lead | | | | | 3.03e-06 | | 1.51e-06 |
| MP | PET Resin Production (DEAM) | Lead | | | | | 1.82e-07 | | 9.08e-08 |
| MP | PMMA Sheet Prod. (DEAM) | Lead | | | | | 3.83e-07 | | 1.92e-07 |
| MP | Polycarbonate Production (PC; DEAM) | Lead | | | | | 5.16e-07 | | 2.58e-07 |
| MP | Steel Prod., cold-rolled, semi-finished (EB) | Lead | | | | | 1.08e-06 | | 5.40e-07 |
| MP | Styrene-butadiene Copolymer Prod. (DEAM mix) | Lead | | | | | 1.81e-07 | | 9.04e-08 |
| MP | Aluminum Prod. (all virgin; EB) | Lead (Pb, ore) | 2.35e-05 | | | | | | |
| MP | PET Resin Production (DEAM) | Lead (Pb, ore) | 1.82e-07 | | | | | | |
| MP | Polycarbonate Production (PC; DEAM) | Lead (Pb, ore) | 1.03e-06 | | | | | | |
| MP | Steel Prod., cold-rolled, semi-finished (EB) | Lead (Pb, ore) | 2.84e-08 | | | | | | |
| MP | Aluminum Prod. (all virgin; EB) | Lead cmpds | | | | | 6.49e-06 | 6.40e-05 | 3.25e-06 |
| MP | Natural Gas Prod. (DEAM) | Lead cmpds | | | | | 3.30e-12 | 3.25e-11 | 1.65e-12 |
| MP | Steel Prod., cold-rolled, semi-finished (EB) | Lead cmpds | | | | | 8.65e-07 | 8.52e-06 | 4.33e-07 |
| MP | Steel Prod., cold-rolled, semi-finished (EB) | Lead-210 (isotope) | | | | 3.21e-01 | | | |
| Manufacturing | Fuel Oil #2 Prod. (DEAM) | Lead | | | | | 3.62e-09 | | 1.81e-09 |
| Manufacturing | Fuel Oil #4 Prod. (DEAM mix) | Lead | | | | | 1.28e-08 | | 6.38e-09 |
| Manufacturing | Fuel Oil #6 Prod. (DEAM) | Lead | | | | | 6.80e-09 | | 3.40e-09 |
| Manufacturing | LCD glass mfg. (CDP) | Lead | | | | | 4.02e-06 | 4.02e-06 | 2.01e-06 |
| Manufacturing | LCD module mfg. (CDP) | Lead | | | | | 1.23e-05 | 1.23e-05 | 6.17e-06 |
| Manufacturing | LPG Production (DEAM) | Lead | | | | | 1.19e-06 | | 5.93e-07 |
| Manufacturing | Natural Gas Prod. (DEAM) | Lead | | | | | 6.83e-08 | | 3.42e-08 |
| Manufacturing | US electric grid | Lead | | | | | 4.94e-08 | | 2.47e-08 |
| Manufacturing | Fuel Oil #2 Prod. (DEAM) | Lead cmpds | | | | | 3.06e-13 | 3.01e-12 | 1.53e-13 |
| Manufacturing | Fuel Oil #4 Prod. (DEAM mix) | Lead cmpds | | | | | 8.20e-13 | 8.08e-12 | 4.10e-13 |
| Manufacturing | Fuel Oil #6 Prod. (DEAM) | Lead cmpds | | | | | 2.69e-13 | 2.65e-12 | 1.34e-13 |
| Manufacturing | LPG Production (DEAM) | Lead cmpds | | | | | 1.12e-10 | 1.10e-09 | 5.60e-11 |
| Manufacturing | Natural Gas Prod. (DEAM) | Lead cmpds | | | | | 7.44e-14 | 7.33e-13 | 3.72e-14 |
| Manufacturing | LCD monitor assembly (CDP) | Printed wiring board | | | 9.38e-06 | | | | |

## Table N-6. LCD Life-Cycle Impact Scores from Lead-based Materials

| Life-cycle Stage | Process | Input/Output | Impact Scores by Category | | | | | | |
|---|---|---|---|---|---|---|---|---|---|
| | | | Nonrenew | Haz. Waste | Solid Waste | Rad | ChrTox-pub | Aq. Tox. | Terr. Tox. |
| Manufacturing | LCD glass mfg. (CDP) | Waste batch (Ba, Pb) (D008 waste) | | 5.67e-09 | | | | | |
| Use | US electric grid | Lead | | | | | 9.52e-06 | | 4.76e-06 |
| End-of Life | Fuel Oil #4 Prod. (DEAM mix) | Lead | | | | | -5.88e-08 | | -2.94e-08 |
| End-of Life | LCD incineration (DEAM mix) | Lead | | | | | 9.60e-06 | | 4.80e-06 |
| End-of Life | LPG Production (DEAM) | Lead | | | | | 9.74e-11 | | 4.87e-11 |
| End-of Life | Natural Gas Prod. (DEAM) | Lead | | | | | -1.43e-08 | | -7.17e-09 |
| End-of Life | US electric grid | Lead | | | | | 1.81e-09 | | 9.03e-10 |
| End-of Life | Fuel Oil #4 Prod. (DEAM mix) | Lead cmpds | | | | | -3.78e-12 | -3.72e-11 | -1.89e-12 |
| End-of Life | LCD incineration (DEAM mix) | Lead cmpds | | | | | 5.19e-10 | 5.11e-09 | 2.59e-10 |
| End-of Life | LCD landfilling (CDP) | Lead cmpds | | | | | 4.80e-10 | 4.73e-09 | 2.40e-10 |
| End-of Life | LPG Production (DEAM) | Lead cmpds | | | | | 9.19e-15 | 9.06e-14 | 4.60e-15 |
| End-of Life | Natural Gas Prod. (DEAM) | Lead cmpds | | | | | -1.56e-14 | -1.54e-13 | -7.81e-15 |

MP = Materials processing.
Blank = not applicable.

## Table N-7. LCD Mercury Inputs by Life-cycle Stage

| Life-cycle Stage | Process | Input | Quantity | Units | Type |
|---|---|---|---|---|---|
| Manufacturing | LCD CCFL mfg. (CDP) | Mercury | 3.99e-06 | kg | Primary material |
| Manufacturing | LCD backlight unit assembly (CDP) | Backlight lamp (CCFL) | 1.94e-03 | kg | Direct to assembly |

## Table N-8. CRT Mercury Outputs by Life-cycle Stage

| Life-cycle Stage | Process | Output | Quantity | Units | Type | Disposition |
|---|---|---|---|---|---|---|
| Materials Processing | ABS Production (DEAM) | Mercury | 2.12e-07 | kg | Airborne | air |
| Materials Processing | ABS Production (DEAM) | Mercury compounds | 2.12e-07 | kg | Waterborne | surface water |
| Materials Processing | Aluminum Prod. (all virgin; EB) | Mercury | 2.02e-07 | kg | Airborne | air |
| Materials Processing | Aluminum Prod. (all virgin; EB) | Mercury | 8.93e-11 | kg | Solid waste | landfill |
| Materials Processing | Ferrite mfg. (EB) | Mercury | 1.62e-07 | kg | Airborne | air |
| Materials Processing | Ferrite mfg. (EB) | Mercury | 1.11e-12 | kg | Solid waste | landfill |
| Materials Processing | Ferrite mfg. (EB) | Mercury compounds | 1.03e-10 | kg | Waterborne | surface water |
| Materials Processing | Invar (DEAM mix) | Mercury | 2.12e-07 | kg | Airborne | air |
| Materials Processing | Invar (DEAM mix) | Mercury | 3.39e-11 | kg | Solid waste | landfill |
| Materials Processing | Invar (DEAM mix) | Mercury compounds | 1.06e-10 | kg | Waterborne | surface water |
| Materials Processing | Lead (EB) | Mercury | 1.51e-06 | kg | Airborne | air |
| Materials Processing | Lead (EB) | Mercury | 1.72e-11 | kg | Solid waste | landfill |
| Materials Processing | Lead (EB) | Mercury compounds | 1.50e-09 | kg | Waterborne | surface water |
| Materials Processing | Polycarbonate Production (PC; DEAM) | Mercury | 4.62e-07 | kg | Airborne | air |
| Materials Processing | Polycarbonate Production (PC; DEAM) | Mercury compounds | 4.62e-07 | kg | Waterborne | surface water |
| Materials Processing | Steel Prod., cold-rolled, semi-finished (EB) | Mercury | 3.26e-08 | kg | Airborne | air |
| Materials Processing | Steel Prod., cold-rolled, semi-finished (EB) | Mercury | 8.26e-14 | kg | Solid waste | landfill |
| Materials Processing | Steel Prod., cold-rolled, semi-finished (EB) | Mercury compounds | 8.58e-08 | kg | Waterborne | surface water |
| Materials Processing | Styrene-butadiene Copolymer Prod. (DEAM mix) | Mercury | 2.07e-07 | kg | Airborne | air |
| Materials Processing | Styrene-butadiene Copolymer Prod. (DEAM mix) | Mercury compounds | 2.07e-07 | kg | Waterborne | surface water |
| Manufacturing | Fuel Oil #2 Prod. (DEAM) | Mercury | 2.72e-09 | kg | Airborne | air |
| Manufacturing | Fuel Oil #2 Prod. (DEAM) | Mercury compounds | 3.77e-15 | kg | Waterborne | surface water |
| Manufacturing | Fuel Oil #4 Prod. (DEAM mix) | Mercury | 2.89e-10 | kg | Airborne | air |
| Manufacturing | Fuel Oil #4 Prod. (DEAM mix) | Mercury compounds | 3.06e-16 | kg | Waterborne | surface water |
| Manufacturing | Fuel Oil #6 Prod. (DEAM) | Mercury | 6.94e-09 | kg | Airborne | air |
| Manufacturing | Fuel Oil #6 Prod. (DEAM) | Mercury compounds | 4.54e-15 | kg | Waterborne | surface water |
| Manufacturing | Japanese Electric Grid | Mercury | 1.18e-07 | kg | Airborne | air |
| Manufacturing | LPG Production (DEAM) | Mercury | 8.69e-07 | kg | Airborne | air |
| Manufacturing | LPG Production (DEAM) | Mercury compounds | 1.34e-12 | kg | Waterborne | surface water |
| Manufacturing | Natural Gas Prod. (DEAM) | Mercury | 1.88e-09 | kg | Airborne | air |

## Table N-8. CRT Mercury Outputs by Life-cycle Stage

| Life-cycle Stage | Process | Output | Quantity | Units | Type | Disposition |
|---|---|---|---|---|---|---|
| Manufacturing | Natural Gas Prod. (DEAM) | Mercury compounds | 2.71e-17 | kg | Waterborne | surface water |
| Manufacturing | US electric grid | Mercury | 1.20e-07 | kg | Airborne | air |
| Use | US electric grid | Mercury | 7.51e-06 | kg | Airborne | air |
| End-of-life | CRT Incineration (DEAM mix) | Mercury | -1.12e-07 | kg | Airborne | air |
| End-of-life | CRT Incineration (DEAM mix) | Mercury compounds | 2.15e-11 | kg | Waterborne | surface water |
| End-of-life | CRT landfilling (CDP) | Mercury compounds | 2.19e-11 | kg | Waterborne | surface water |
| End-of-life | Fuel Oil #4 Prod. (DEAM mix) | Mercury | -3.11e-09 | kg | Airborne | air |
| End-of-life | Fuel Oil #4 Prod. (DEAM mix) | Mercury compounds | -3.29e-15 | kg | Waterborne | surface water |
| End-of-life | LPG Production (DEAM) | Mercury | 7.50e-12 | kg | Airborne | air |
| End-of-life | LPG Production (DEAM) | Mercury compounds | 1.16e-17 | kg | Waterborne | surface water |
| End-of-life | Natural Gas Prod. (DEAM) | Mercury | -9.44e-10 | kg | Airborne | air |
| End-of-life | Natural Gas Prod. (DEAM) | Mercury compounds | -1.36e-17 | kg | Waterborne | surface water |
| End-of-life | US electric grid | Mercury | 7.52e-10 | kg | Airborne | air |

## Table N-9. LCD Mercury Outputs by Life-cycle Stage

| Life-Cycle Stage | Process | Output | Quantity | Units | Type | Disposition |
|---|---|---|---|---|---|---|
| MP | Aluminum Prod. (all virgin; EB) | Mercury | 7.51e-08 | kg | Airborne | air |
| MP | Natural Gas Prod. (DEAM) | Mercury | 1.32e-07 | kg | Airborne | air |
| MP | PET Resin Production (DEAM) | Mercury | 9.08e-08 | kg | Airborne | air |
| MP | PMMA Sheet Prod. (DEAM) | Mercury | 1.92e-07 | kg | Airborne | air |
| MP | Polycarbonate Production (PC; DEAM) | Mercury | 2.58e-07 | kg | Airborne | air |
| MP | Steel Prod., cold-rolled, semi-finished (EB) | Mercury | 1.60e-08 | kg | Airborne | air |
| MP | Styrene-butadiene Copolymer Prod. (DEAM mix) | Mercury | 9.04e-08 | kg | Airborne | air |
| MP | Aluminum Prod. (all virgin; EB) | Mercury | 3.32e-11 | kg | Solid waste | landfill |
| MP | Steel Prod., cold-rolled, semi-finished (EB) | Mercury | 4.05e-14 | kg | Solid waste | landfill |
| MP | PET Resin Production (DEAM) | Mercury | 9.08e-08 | kg | Waterborne | surface water |
| MP | Natural Gas Prod. (DEAM) | Mercury compounds | 1.89e-15 | kg | Waterborne | surface water |
| MP | PMMA Sheet Prod. (DEAM) | Mercury compounds | 1.92e-07 | kg | Waterborne | surface water |
| MP | Polycarbonate Production (PC; DEAM) | Mercury compounds | 2.58e-07 | kg | Waterborne | surface water |
| MP | Steel Prod., cold-rolled, semi-finished (EB) | Mercury compounds | 4.21e-08 | kg | Waterborne | surface water |
| MP | Styrene-butadiene Copolymer Prod. (DEAM mix) | Mercury compounds | 9.04e-08 | kg | Waterborne | surface water |
| Manufacturing | LCD CCFL mfg. (CDP) | Backlight lamp (CCFL) | 1.94e-03 | kg | Product | |
| Manufacturing | LCD backlight unit assembly (CDP) | Broken CCFL | 2.69e-07 | kg | Solid waste | landfill |
| Manufacturing | Fuel Oil #2 Prod. (DEAM) | Mercury | 1.27e-10 | kg | Airborne | air |
| Manufacturing | Fuel Oil #4 Prod. (DEAM mix) | Mercury | 4.46e-10 | kg | Airborne | air |
| Manufacturing | Fuel Oil #6 Prod. (DEAM) | Mercury | 2.36e-10 | kg | Airborne | air |
| Manufacturing | Japanese Electric Grid | Mercury | 3.97e-07 | kg | Airborne | air |
| Manufacturing | LPG Production (DEAM) | Mercury | 4.17e-08 | kg | Airborne | air |
| Manufacturing | Natural Gas Prod. (DEAM) | Mercury | 2.97e-09 | kg | Airborne | air |
| Manufacturing | US electric grid | Mercury | 1.45e-08 | kg | Airborne | air |
| Manufacturing | LCD monitor assembly (CDP) | Mercury | 2.00e-06 | kg | Hazardous waste | recycling/reuse |
| Manufacturing | LCD module mfg. (CDP) | Mercury | 9.69e-08 | kg | Waterborne | surface water |
| Manufacturing | LCD CCFL mfg. (CDP) | Mercury | 8.33e-08 | kg | Waterborne | treatment |
| Manufacturing | Fuel Oil #2 Prod. (DEAM) | Mercury compounds | 1.76e-16 | kg | Waterborne | surface water |
| Manufacturing | Fuel Oil #4 Prod. (DEAM mix) | Mercury compounds | 4.71e-16 | kg | Waterborne | surface water |
| Manufacturing | Fuel Oil #6 Prod. (DEAM) | Mercury compounds | 1.55e-16 | kg | Waterborne | surface water |

## Table N-9. LCD Mercury Outputs by Life-cycle Stage

| Life-Cycle Stage | Process | Output | Quantity | Units | Type | Disposition |
|---|---|---|---|---|---|---|
| Manufacturing | LPG Production (DEAM) | Mercury compounds | 6.44e-14 | kg | Waterborne | surface water |
| Manufacturing | Natural Gas Prod. (DEAM) | Mercury compounds | 4.28e-17 | kg | Waterborne | surface water |
| Manufacturing | LCD backlight unit assembly (CDP) | Waste CCFL, with mercury | 8.17e-10 | kg | Hazardous waste | treatment |
| Manufacturing | LCD backlight unit assembly (CDP) | Waste glass, with mercury | 1.05e-10 | kg | Hazardous waste | landfill |
| Manufacturing | LCD CCFL mfg. (CDP) | Wastewater stream, from CCFL mfg. | 1.67e+02 | kg | Waterborne | treatment |
| Use | US electric grid | Mercury | 2.80e-06 | kg | Airborne | air |
| End-of-life | Fuel Oil #4 Prod. (DEAM mix) | Mercury | -2.05e-09 | kg | Airborne | air |
| End-of-life | LCD incineration (DEAM mix) | Mercury | -8.42e-08 | kg | Airborne | air |
| End-of-life | LPG Production (DEAM) | Mercury | 3.42e-12 | kg | Airborne | air |
| End-of-life | Natural Gas Prod. (DEAM) | Mercury | -6.23e-10 | kg | Airborne | air |
| End-of-life | US electric grid | Mercury | 5.32e-10 | kg | Airborne | air |
| End-of-life | Fuel Oil #4 Prod. (DEAM mix) | Mercury compounds | -2.17e-15 | kg | Waterborne | surface water |
| End-of-life | LCD incineration (DEAM mix) | Mercury compounds | 8.67e-12 | kg | Waterborne | surface water |
| End-of-life | LCD landfilling (CDP) | Mercury compounds | 7.50e-12 | kg | Waterborne | surface water |
| End-of-life | LPG Production (DEAM) | Mercury compounds | 5.29e-18 | kg | Waterborne | surface water |
| End-of-life | Natural Gas Prod. (DEAM) | Mercury compounds | -8.98e-18 | kg | Waterborne | surface water |

MP = Materials processing

## Table N-10. CRT Life-Cycle Impact Scores from Mercury-based Materials

| Life-cycle Stage | Process | Input/Output | Impact Scores by Category | | | | | |
|---|---|---|---|---|---|---|---|---|
| | | | Haz. Waste | Solid Waste | ChrTox-pub | ChrTox-occ | Aq. Tox. | Terr. Tox. |
| MP | ABS Production (DEAM) | Mercury | | | 2.12e-07 | | | 2.12e-07 |
| MP | Aluminum Prod. (all virgin; EB) | Mercury | | | 2.02e-07 | | | 2.02e-07 |
| MP | Ferrite mfg. (EB) | Mercury | | | 1.62e-07 | | | 1.62e-07 |
| MP | Invar (DEAM mix) | Mercury | | | 2.12e-07 | | | 2.12e-07 |
| MP | Lead (EB) | Mercury | | | 1.51e-06 | | | 1.51e-06 |
| MP | Polycarbonate Production (PC; DEAM) | Mercury | | | 4.62e-07 | | | 4.62e-07 |
| MP | Steel Prod., cold-rolled, semi-finished (EB) | Mercury | | | 3.26e-08 | | | 3.26e-08 |
| MP | Styrene-butadiene Copolymer Prod. (DEAM mix) | Mercury | | | 2.07e-07 | | | 2.07e-07 |
| MP | ABS Production (DEAM) | Mercury compounds | | | 1.12e-04 | | 1.97e-04 | 1.11e-04 |
| MP | Ferrite mfg. (EB) | Mercury compounds | | | 5.45e-08 | | 9.63e-08 | 5.44e-08 |
| MP | Invar (DEAM mix) | Mercury compounds | | | 5.58e-08 | | 9.86e-08 | 5.57e-08 |
| MP | Lead (EB) | Mercury compounds | | | 7.89e-07 | | 1.39e-06 | 7.88e-07 |
| MP | Polycarbonate Production (PC; DEAM) | Mercury compounds | | | 2.44e-04 | | 4.30e-04 | 2.43e-04 |
| MP | Steel Prod., cold-rolled, semi-finished (EB) | Mercury compounds | | | 4.53e-05 | | 8.00e-05 | 4.52e-05 |
| MP | Styrene-butadiene Copolymer Prod. (DEAM mix) | Mercury compounds | | | 1.09e-04 | | 1.93e-04 | 1.09e-04 |
| Manufacturing | Fuel Oil #2 Prod. (DEAM) | Mercury | | | 2.72e-09 | | | 2.72e-09 |
| Manufacturing | Fuel Oil #4 Prod. (DEAM mix) | Mercury | | | 2.89e-10 | | | 2.89e-10 |
| Manufacturing | Fuel Oil #6 Prod. (DEAM) | Mercury | | | 6.94e-09 | | | 6.94e-09 |
| Manufacturing | Japanese Electric Grid | Mercury | | | 1.18e-07 | | | 1.18e-07 |
| Manufacturing | LPG Production (DEAM) | Mercury | | | 8.69e-07 | | | 8.69e-07 |
| Manufacturing | Natural Gas Prod. (DEAM) | Mercury | | | 1.88e-09 | | | 1.88e-09 |
| Manufacturing | US electric grid | Mercury | | | 1.20e-07 | | | 1.20e-07 |
| Manufacturing | Fuel Oil #2 Prod. (DEAM) | Mercury compounds | | | 1.99e-12 | | 3.51e-12 | 1.98e-12 |
| Manufacturing | Fuel Oil #4 Prod. (DEAM mix) | Mercury compounds | | | 1.61e-13 | | 2.85e-13 | 1.61e-13 |
| Manufacturing | Fuel Oil #6 Prod. (DEAM) | Mercury compounds | | | 2.39e-12 | | 4.23e-12 | 2.39e-12 |
| Manufacturing | LPG Production (DEAM) | Mercury compounds | | | 7.08e-10 | | 1.25e-09 | 7.07e-10 |
| Manufacturing | Natural Gas Prod. (DEAM) | Mercury compounds | | | 1.43e-14 | | 2.53e-14 | 1.43e-14 |
| Use | US electric grid | Mercury | | | 7.51e-06 | | | 7.51e-06 |
| End-of-life | CRT Incineration (DEAM mix) | Mercury | | | -1.12e-07 | | | -1.12e-07 |

## Table N-10. CRT Life-Cycle Impact Scores from Mercury-based Materials

| Life-cycle Stage | Process | Input/Output | Impact Scores by Category | | | | | |
|---|---|---|---|---|---|---|---|---|
| | | | Haz. Waste | Solid Waste | ChrTox-pub | ChrTox-occ | Aq. Tox. | Terr. Tox. |
| End-of-life | Fuel Oil #4 Prod. (DEAM mix) | Mercury | | | -3.11e-09 | | | -3.11e-09 |
| End-of-life | LPG Production (DEAM) | Mercury | | | 7.50e-12 | | | 7.50e-12 |
| End-of-life | Natural Gas Prod. (DEAM) | Mercury | | | -9.44e-10 | | | -9.44e-10 |
| End-of-life | US electric grid | Mercury | | | 7.52e-10 | | | 7.52e-10 |
| End-of-life | CRT Incineration (DEAM mix) | Mercury compounds | | | 1.13e-08 | | 2.00e-08 | 1.13e-08 |
| End-of-life | CRT landfilling (CDP) | Mercury compounds | | | 1.15e-08 | | 2.04e-08 | 1.15e-08 |
| End-of-life | Fuel Oil #4 Prod. (DEAM mix) | Mercury compounds | | | -1.74e-12 | | -3.06e-12 | -1.73e-12 |
| End-of-life | LPG Production (DEAM) | Mercury compounds | | | 6.11e-15 | | 1.08e-14 | 6.10e-15 |
| End-of-life | Natural Gas Prod. (DEAM) | Mercury compounds | | | -7.18e-15 | | -1.27e-14 | -7.16e-15 |

MP = Materials processing.
Blank = not applicable.

## Table N-11. LCD Life-Cycle Impact Scores from Mercury-based Materials

| Life-cycle Stage | Process | Input/Output | Impact Scores by Category | | | | | |
|---|---|---|---|---|---|---|---|---|
| | | | Haz. Waste | Solid Waste | ChrTox-pub | ChrTox- occ | Aq. Tox. | Terr. Tox. |
| MP | Aluminum Prod. (all virgin; EB) | Mercury | | | 7.51e-08 | | | 7.51e-08 |
| MP | Natural Gas Prod. (DEAM) | Mercury | | | 1.32e-07 | | | 1.32e-07 |
| MP | PET Resin Production (DEAM) | Mercury | | | 1.82e-07 | | 1.82e-07 | 1.82e-07 |
| MP | PMMA Sheet Prod. (DEAM) | Mercury | | | 1.92e-07 | | | 1.92e-07 |
| MP | Polycarbonate Production (PC; DEAM) | Mercury | | | 2.58e-07 | | | 2.58e-07 |
| MP | Steel Prod., cold-rolled, semi-finished (EB) | Mercury | | | 1.60e-08 | | | 1.60e-08 |
| MP | Styrene-butadiene Copolymer Prod. (DEAM mix) | Mercury | | | 9.04e-08 | | | 9.04e-08 |
| MP | Natural Gas Prod. (DEAM) | Mercury compounds | | | 1.00e-12 | | 1.77e-12 | 9.98e-13 |
| MP | PMMA Sheet Prod. (DEAM) | Mercury compounds | | | 1.01e-04 | | 1.79e-04 | 1.01e-04 |
| MP | Polycarbonate Production (PC; DEAM) | Mercury compounds | | | 1.36e-04 | | 2.40e-04 | 1.36e-04 |
| MP | Steel Prod., cold-rolled, semi-finished (EB) | Mercury compounds | | | 2.22e-05 | | 3.92e-05 | 2.22e-05 |
| MP | Styrene-butadiene Copolymer Prod. (DEAM mix) | Mercury compounds | | | 4.77e-05 | | 8.42e-05 | 4.76e-05 |
| Manufacturing | LCD backlight unit assembly (CDP) | Broken CCFL | | 1.98e-11 | | | | |
| Manufacturing | Fuel Oil #2 Prod. (DEAM) | Mercury | | | 1.27e-10 | | | 1.27e-10 |
| Manufacturing | Fuel Oil #4 Prod. (DEAM mix) | Mercury | | | 4.46e-10 | | | 4.46e-10 |
| Manufacturing | Fuel Oil #6 Prod. (DEAM) | Mercury | | | 2.36e-10 | | | 2.36e-10 |
| Manufacturing | Japanese Electric Grid | Mercury | | | 3.97e-07 | | | 3.97e-07 |
| Manufacturing | LCD CCFL mfg. (CDP) | Mercury | | | | 3.99e-06 | | |
| Manufacturing | LCD module mfg. (CDP) | Mercury | | | 9.69e-08 | | 1.94e-07 | 9.69e-08 |
| Manufacturing | LPG Production (DEAM) | Mercury | | | 4.17e-08 | | | 4.17e-08 |
| Manufacturing | Natural Gas Prod. (DEAM) | Mercury | | | 2.97e-09 | | | 2.97e-09 |
| Manufacturing | US electric grid | Mercury | | | 1.45e-08 | | | 1.45e-08 |
| Manufacturing | Fuel Oil #2 Prod. (DEAM) | Mercury compounds | | | 9.27e-14 | | 1.64e-13 | 9.25e-14 |
| Manufacturing | Fuel Oil #4 Prod. (DEAM mix) | Mercury compounds | | | 2.49e-13 | | 4.39e-13 | 2.48e-13 |
| Manufacturing | Fuel Oil #6 Prod. (DEAM) | Mercury compounds | | | 8.15e-14 | | 1.44e-13 | 8.14e-14 |
| Manufacturing | LPG Production (DEAM) | Mercury compounds | | | 3.40e-11 | | 6.00e-11 | 3.39e-11 |
| Manufacturing | Natural Gas Prod. (DEAM) | Mercury compounds | | | 2.26e-14 | | 3.98e-14 | 2.25e-14 |
| Manufacturing | LCD backlight unit assembly (CDP) | Waste glass, with mercury | 7.73e-15 | | | | | |
| Use | US electric grid | Mercury | | | 2.80e-06 | | | 2.80e-06 |

## Table N-11. LCD Life-Cycle Impact Scores from Mercury-based Materials

| Life-cycle Stage | Process | Input/Output | Impact Scores by Category | | | | | |
|---|---|---|---|---|---|---|---|---|
| | | | Haz. Waste | Solid Waste | ChrTox-pub | ChrTox- occ | Aq. Tox. | Terr. Tox. |
| End of Life | Fuel Oil #4 Prod. (DEAM mix) | Mercury | | | -2.05e-09 | | | -2.05e-09 |
| End of Life | LCD incineration (DEAM mix) | Mercury | | | -8.42e-08 | | | -8.42e-08 |
| End of Life | LPG Production (DEAM) | Mercury | | | 3.42e-12 | | | 3.42e-12 |
| End of Life | Natural Gas Prod. (DEAM) | Mercury | | | -6.23e-10 | | | -6.23e-10 |
| End of Life | US electric grid | Mercury | | | 5.32e-10 | | | 5.32e-10 |
| End of Life | Fuel Oil #4 Prod. (DEAM mix) | Mercury compounds | | | -1.15e-12 | | -2.02e-12 | -1.14e-12 |
| End of Life | LCD incineration (DEAM mix) | Mercury compounds | | | 4.57e-09 | | 8.08e-09 | 4.57e-09 |
| End of Life | LCD landfilling (CDP) | Mercury compounds | | | 3.96e-09 | | 6.99e-09 | 3.95e-09 |
| End of Life | LPG Production (DEAM) | Mercury compounds | | | 2.79e-15 | | 4.93e-15 | 2.78e-15 |
| End of Life | Natural Gas Prod. (DEAM) | Mercury compounds | | | -4.74e-15 | | -8.37e-15 | -4.73e-15 |

MP = Materials processing.
Blank = not applicable.