PCBs IN THE UNITED STATES INDUSTRIAL USE AND ENVIRONMENTAL DISTRIBUTION

TASK I

FEBRUARY 25, 1976

FINAL REPORT

U.S. ENVIRONMENTAL PROTECTION AGENCY
OFFICE OF TOXIC SUBSTANCES
WASHINGTON, D.C. 20460

EPA 560/6-76-005

PCBs IN THE UNITED STATES INDUSTRIAL USE AND ENVIRONMENTAL DISTRIBUTION

Task I

EPA Contract No. 68-01-3259

EPA Project Officer: Thomas Kopp

For

Environmental Protection Agency

Office of Toxic Substances
4th and M Streets, S.W.
Washington, D. C. 20460

February 25, 1976

REVIEW NOTICE

This report has been reviewed by the Office of Toxic Substances, EPA and approved for publication. Approval does not signify that the contents necessarily reflect the views and policies of the Environmental Protection Agency, nor does mention of trade names or commercial products constitute endorsement or recommendation for use.

ABSTRACT

This document presents the current state of knowledge about the production, usage, and distribution of polychlorinated biphenyls (PCBs) in the United States. The information presented is derived from detailed studies on the production and first tier user industries, the past and present generation and disposition of PCB-containing wastes, environmental transport and cumulative loads, potential alternatives to PCBs usage, inadvertent losses to and potential formation in the environment, and current regulatory authorities for PCBs control. These results indicated that, although PCBs content of industrial wastes can be reduced through various approaches (treatment, substitution, etc.), there exists a potentially severe future hazard in the form of large amounts of PCBs currently contained in land disposal sites. Further definition of this and other aspects of the PCBs problem, and determination of ways to minimize the hazard, are recommended.

TABLE OF CONTENTS

		Page
SECTION I - INTRODUCTION		1
1.0	OVERVIEW OF THE PCBs PROBLEM	1
2.0	OBJECTIVE AND SCOPE OF THE REPORT	2
SECTION II - SUMMARY		4
1.0	PRODUCTION, USAGE, AND DISTRIBUTION OF PCBs	4
	1.1 Overview of PCBs Industrial Usage in the United States	4
	1.2 Cumulative PCBs Production and Usage in the United States	5
	1.3 Current Distribution of PCBs Usage and Associated Wastes	8
	1.4 Land Disposal and Environmental Load	8
	1.5 Foreign Production of PCBs	10
2.0	CHARACTERIZATION OF INDUSTRY PRACTICE AND WASTE HANDLING FOR THE PCBs PRODUCER AND MAJOR FIRST-TIER USERS	10
	2.1 Manufacture of PCBs and PCB-Containing Capacitors and Transformers	10
	2.2 Treatment and Disposal of Industrial Wastes Containing PCBs	12
	2.2.1 Incineration	13
	2.2.2 Treatment of PCB-Contaminated Wastewater	13
	2.3 Characterization of the Investment Casting Industry	15
	2.4 Transformer Service Industry	16
3.0	SUBSTITUTES AND USE ALTERNATIVES FOR PCBs	16
	3.1 Substitutes for PCBs in Capacitors	16
	3.2 Substitutes for PCBs in Transformers	17
	3.3 Alternatives to Other PCBs Applications	19
4.0	SOURCES OF INADVERTENT ENTRY OF PCBs INTO THE ENVIRONMENT.	19
	4.1 Paper Recycling	19
	4.2 Effluent Contamination by PCBs in Other Industries	20
	4.3 Inadvertent Production of PCBs in the Environment	20

TABLE OF CONTENTS (Con't)

Page

SECTION II (Con't)

5.0 TRANSPORT AND DISTRIBUTION OF PCBs IN THE ENVIRONMENT . . . 21

6.0 REGULATORY ACTIONS ON PCBs. 23

SECTION III - CONCLUSIONS AND RECOMMENDATIONS 25

1.0 CONCLUSIONS 25

2.0 RECOMMENDATIONS 28

SECTION IV - CHEMICAL AND PHYSICAL PROPERTIES OF CHLORINATED BIPHENYLS 31

1.0 INTRODUCTION 31

1.1 The Chemistry of the Chlorinated Biphenyls 31
1.2 Commercial Production and Chemical Makeup of the Aroclors 34
1.3 Physical Properties of the PCB Aroclors 39

1.3.1 Physical Properties of Industrial and Technical Interest 39
1.3.2 Physical Properties of Environmental Interest . 41

1.4 Chemical Properties of the Chlorobiphenyls 49
1.5 Photochemical Reactions Involving the PCBs 49
1.6 Metabolic Chemistry of the Chlorobiphenyls 51

SECTION V - INDUSTRIAL CHARACTERIZATIONS. 54

1.0 INTRODUCTION 54

2.0 MANUFACTURING PROCESS - POLYCHLORINATED BIPHENYLS (PCBs) . 54

2.1 Process Description 54
2.2 Raw Wastes 57
2.3 Plant Water Usage 59
2.4 Wastewater Treatment and Housekeeping 60

2.4.1 Treatment Facility for the Effluent from Sauget Complex. 64

2.5 Plant Effluents 64

3.0 PCB USER INDUSTRIES 65

3.1 Askarel Capacitor Manufacturing Industry 65

TABLE OF CONTENTS (Con't)

Page

3.1.1 Askarel Capacitor Manufacturing Plants 67

3.1.1.1 Askarel Handling. 70
3.1.1.2 Process Description 71
3.1.1.3 Raw Wastes. 76
3.1.1.4 Water Use 76
3.1.1.5 Wastewater Treatment 80
3.1.1.6 Effluent Composition 80

3.2 Askarel Transformer Manufacturing Industry 84

3.2.1 Transformer Manufacturing Plants 88

3.2.1.1 Askarel Handling. 88
3.2.1.2 Process Description 91

3.2.1.2.1 Assembly and Askarel Filling Procedure for the Distribution and Power Transformer . . . 92

3.2.1.3 Raw Wastes. 98
3.2.1.4 Water Use 98
3.2.1.5 Wastewater Treatment 101
3.2.1.6 Effluent Composition 103

3.2.2 Askarel Transformer Repair Industry 103

3.2.2.1 Transformer Inspection and Maintenance. 103
3.2.2.2 Repair of Failed Transformers 108
3.2.2.3 PCB Usage in the Transformer Repair Industry 114
3.2.2.4 Transformer Service Life 115
3.2.2.5 Usage Rate of PCBs in Transformer Repair 115

3.3 Investment Casting. 115

3.3.1 Background 116
3.3.2 Investment Casting Technologies 118

3.3.2.1 Principles of Investment Casting . . . 118
3.3.2.2 Foundry Process - Use of PCT and PCB Filled Waxes 122
3.3.2.3 Waste Streams 125

3.3.3 Wax Manufacturing. 127
3.3.4 Recommendations. 128

3.4 Secondary Fiber Recovery (Paper Recycling) 128

TABLE OF CONTENTS (Con't)

Page

3.4.1 Historical Use of PCBs in the Paper Industry. . 129
3.4.2 Fiber Recovery Mill Process 135

3.5 Industrial Use of PCBs as Hydraulic and Heat Transfer Fluids. 140

3.5.1 General 140
3.5.2 Use of Imported PCBs by Joy Manufacturing . . . 141

3.6 Recent Use of PCBs in Product Development Activities . 141

SECTION VI - WASTE TREATMENT TECHNOLOGIES 145

1.0 INTRODUCTION. 145

1.1 Summary of Waste Management Problem Areas 145

1.1.1 Waste Liquid PCBs and Contaminated Scrap Oil . 145
1.1.2 PCBs in Wastewater 146
1.1.3 PCB-Contaminated Solid Wastes 146

1.1.3.1 Burnable Solid Waste Materials Containing PCBs 146
1.1.3.2 Nonburnable Solid Waste Materials Containing, or Contaminated with PCBs 147

1.1.4 Air Emissions of PCBs 147

1.2 Summary of Current PCBs Waste Control Practices . . . 147

1.2.1 Control of Waste Liquid PCBs and Contaminated Scrap Oils 147
1.2.2 Control of PCBs in Wastewaters 148
1.2.3 Control of Solid Wastes Contaiminated with PCBs 149
1.2.4 Control of Air Emissions of PCBs 150

2.0 CANDIDATE PCBs WASTE TREATMENT TECHNOLOGIES CONSIDERED. . . 151

2.1 Treatment of Waste Liquid PCBs and Contaminated Scrap Oils. 152

2.1.1 Incineration 153
2.1.2 Sanitary or Scientific Landfill 154

2.2 Treatment of Wastewaters containing PCBs 154

2.2.1 Carbon Adsorption 154

2.2.1.1 PCBs Adsorption Testing by Carborundum Company 156

TABLE OF CONTENTS (Con't)

Page

SECTION VI (Con't)

2.2.1.2 PCBs Adsorption Testing by ICI-US . . . 158
2.2.1.3 PCBs Adsorption Testing by Calgon Corp. 160

2.2.1.3.1 Adsorption Treatment of Wastewater. 164
2.2.1.3.2 Reactivation of the Granular Carbon. 165
2.2.1.3.3 Carbon Transport 166
2.2.1.3.4 Materials of Construction . 166

2.2.1.4 Carbon Regeneration Alternatives - Wet Catalytic Oxidation 166
2.2.1.5 Further Applications Data 168

2.2.2 Ultraviolet-Assisted Ozonation 168

2.2.2.1 Molecular Responses to Ultraviolet Energy 169
2.2.2.2 Photodegradation of PCBs 170
2.2.2.3 Experimental Factors in UV-Assisted Ozone Oxidation of PCBs 172
2.2.2.4 Destruction of PCBs and Refractory Organics at Houston Research, Inc. . . 173

2.2.2.4.1 PCB Destruction Data 173
2.2.2.4.2 Operating Data Obtained from Refractory Organics Tests . 173

2.2.2.5 Destruction of PCBs and Refractory Organics at Westgate Research Corp.. . 177

2.2.2.5.1 PCBs Destruction Data. . . . 177
2.2.2.5.2 Pilot-Scale Tests of Refractory Organics Decomposition. 181

2.2.2.6 Laboratory Test Results from AiResearch Corp.. 185
2.2.2.7 Comments on UV/Ozone Tests 186

2.2.3 Non-Carbon Adsorbents for PCBs 186

2.2.3.1 The Amberlite XAD Series of Macroreticular Resins. 187

TABLE OF CONTENTS (Con't)

Page

SECTION VI (Con't)

2.2.3.1.1 PCBs Adsorption Testing . . . 187
2.2.3.1.2 Process Concept for Resin Adsorption of PCBs 187

2.3 Treatment of PCBs - Contaminated Solid Wastes. 190

2.3.1 Incineration. 190
2.3.2 Sanitary Landfill 190

2.4 Treatment of Air Emissions 190

2.4.1 Condensation Methods 190
2.4.2 Granular Adsorption Methods 190
2.4.3 Catalytic Oxidation of Organics in Evaporated Effluents. 191

2.5 The Potential for Zero Discharge 191

3.0 RATIONALE AND SELECTIONS OF CURRENTLY RECOMMENDED WASTE TREATMENT METHODS 192

3.1 Incineration Recommended for Liquid PCBs and Scrap Oils. 192
3.2 Carbon Adsorption and UV-Assisted Ozonation Recommended for PCBs in Wastewater. 193
3.3 Incineration and Landfill Recommended for Contaminated Solids. 194
3.4 Dry Carbon Filter Adsorption Recommended for Control of Air Emissions 195

SECTION VII - PRODUCTION AND DISTRIBUTION 198

1.0 PRODUCTION AND CURRENT USE. 198

1.1 Domestic Production of PCBs and PCTs 198
1.2 Foreign Production and Distribution of PCBs 207
1.3 Summary of Recent PCBs and PCTs Imports 207

2.0 FIFTEEN YEAR EXTRAPOLATIONS FOR PCB PRODUCTION AND USE IN ELECTRICAL EQUIPMENT 210

3.0 OVERALL MATERIAL BALANCE 215

SECTION VIII - SUBSTITUTES FOR PCBs 220

1.0 INTRODUCTION. 220

TABLE OF CONTENTS (Con't)

Page

SECTION VIII (Con't)

2.0 ELECTRICAL CAPACITORS 220

2.1 Function of the Dielectric Material 221
2.2 Practical Capacitors 224
2.3 Required Properties of Dielectric Liquid 225
2.4 The Use of PCBs in Capacitors 226

2.4.1 Properties of PCB Capacitor Dielectric Liquid . . 226
2.4.2 Advantages and Disadvantages of PCBs in Capacitors 228
2.4.3 Usage of PCBs in Capacitors 228

2.5 Alternatives to the Use of PCBs in Capacitors 229

2.5.1 Substitutes for PCBs 229

2.5.1.1 Phthalate Esters 230
2.5.1.1.1 Dioctyl Phthalate:(DOP) . . . 230
2.5.1.1.2 Diisononyl Phthalate 230

2.5.1.2 Alkylated PCB. 231
2.5.1.3 Alkylated Chlorodiphenyl Oxide 232
2.5.1.4 Silicones. 233
2.5.1.5 Diaryl Sulfone 233

2.5.2 Elimination of Dielectric Liquids in Capacitors . 233

2.6 The Use of PCB Capacitors in Electrical Equipment. . . . 235

2.6.1 Power Factor Correction 235

2.6.1.1 High Voltage Power Factor Capacitors . . 239
2.6.1.2 Low Voltage Power Factor Capacitors . . 239
2.6.1.3 Lighting Ballast Capacitors 240

2.6.2 Motor Starting Circuits 242
2.6.3 Electronic Filter Capacitors 244

2.7 Institutional Barriers to Substitutes for PCBs in Capacitors. 244

2.7.1 Performance Acceptability 245
2.7.2 Fire Safety 246

2.7.2.1 Utility Use of Power Factor Correction Capacitors. 246
2.7.2.2 Industrial Use of Power Factor Correction Capacitors 247
2.7.2.3 Lighting and Appliance Capacitors . . . 247

TABLE OF CONTENTS (Con't)

Page

SECTION VIII (Con't)

3.0 ELECTRICAL TRANSFORMERS 248

3.1 Heat Generation in Electrical Circuits 248
3.2 The Nature and Purpose of Transformers 250
3.3 Desired Properties for Transformer Heat Transfer Fluids. 251
3.4 Use of PCBs in Electrical Transformers 252
3.5 Present Alternates to the Use of PCBs in Transformers . 254

3.5.1 Mineral Oil-Filled Transformers 254
3.5.2 Open Air Cooled Transformers. 255
3.5.3 Closed Gas Filled Transformers 257

3.6 Current Alternatives to the Use of PCB Cooled Transformers 258

3.6.1 Vault Usage Requirements for Transformers 258
3.6.2 Vault Construction Requirements for Transformers. 259
3.6.3 Transformer Vault Construction Costs. 261

3.7 Substitutes for PCBs in Transformers 263

3.7.1 Fluorocarbons 264
3.7.2 Silicones 264
3.7.3 High Flash Point Mineral Oils 267
3.7.4 High Flash Point Synthetic Hydrocarbons 267

3.8 Institutional Barriers to the Use of Substitutes for PCBs. 268
3.9 Relative Merits of Alternatives to New Askarel Transformers 271

3.9.1 Distribution Transformers 271
3.9.2 Power Transformers. 271
3.9.3 Precipitator Transformers 273
3.9.4 Railroad Transformers 273

3.10 Replacement of Askarels in Existing Transformers 274

3.10.1 PCB Losses Due to Transformer Failures 274
3.10.2 Environmental Effects of an Askarel Replacement Program. 275
3.10.3 Effect of Leaving Askarel Transformers in Service 276

4.0 INVESTMENT CASTING

4.1 Function of the Filler Material. 277
4.2 Use of PCBs in Investment Casting 278
4.3 Advantages and Disadvantages of the Use of Deka PCBs in Investment Casting. 278

TABLE OF CONTENTS (Con't)

Page

SECTION VIII (Con't)

4.4 Alternatives to the Use of Deka PCBs 279

4.4.1 Replacement Filler Materials. 279

4.4.1.1 Isophthalic Acid 279
4.4.1.2 Polystyrene. 280

4.4.2 Unfilled Waxes. 280

4.5 Conclusions - Substitutes for PCB in Investment Casting. 280

SECTION IX - PCBs RELEASE AND CUMULATIVE ENVIRONMENTAL LOADS 286

1.0 ESTIMATES OF FREE PCBs IN THE ENVIRONMENT 286

1.1 PCBs Losses to the Environment Since 1930, by Use and by Chlorine Content of Molecule. 286
1.2 Total PCBs Accumulation and Current Rates 287
1.3 Current PCBs Disposal in Landfills and Dumps 291
1.4 Release of PCBs via Industrial Effluents (Waterborne). . 294
1.5 Spills of PCBs During Transport. 294

SECTION X - INADVERTENT AMBIENT REACTIONS AS ROUTES OF ENTRY OF PCBs INTO THE ENVIRONMENT 297

1.0 INTRODUCTION. 297

2.0 COMMERCIAL BACKGROUND, PRODUCTION AND PROPERTIES OF BIPHENYL. 297

2.1 Origins and Commercial Usage Background. 297
2.2 Production Methods and Rates for Biphenyl 298
2.3 Properties and Characteristics of Biphenyl 300

3.0 PROVEN BIPHENYL REACTIONS YIELDING PCBs 301

3.1 Chlorination of Biphenyl 301
3.2 Reactions Combining Phenyls to Produce Biphenyls 302

4.0 BIPHENYL USAGE IN HEAT TRANSFER FLUIDS, DYES AND PACKAGING. . 303

4.1 Heat Transfer Fluids 303
4.2 Dye Carriers for Polyesters and Polyolefins. 303
4.3 Biphenyl as a Mold Preventive in Packaging 304
4.4 General Biphenyl Occurrence in the Environment 305

5.0 PCBs GENERATION AND WASTEWATER EXPERIMENTS IN A MAJOR U.S. BIPHENYL USAGE LOCALITY. 305

6.0 POTENTIAL DEGRADATION AND SUBSEQUENT REACTION OF DDT AND RELATED COMPOUNDS IN THE ENVIRONMENT TO FORM PCBs. 307

TABLE OF CONTENTS (Con't)

Page

SECTION X (Con't)

7.0 COMPARISON OF POTENTIAL INADVERTENT AMBIENT REACTIONS 308

8.0 PCBs FOUND IN THE EFFLUENTS OF THE MACHINERY AND MECHANICAL PRODUCTS MANUFACTURING INDUSTRY. 309

SECTION XI - MOVEMENT OF PCBs IN THE ENVIRONMENT - GENERAL DISTRIBUTION MODEL. 314

1.0 INTRODUCTION. 314

2.0 RATIONALE FOR MODEL DEVELOPMENT 315

2.1 Time Dependence of the PCB Input Rate [B(t)] 316

3.0 APPLICATION OF THE MODEL TO LAKE MICHIGAN 317

4.0 RESULTS AND CONCLUSIONS 319

4.1 Results. 319
4.2 Conclusions. 320

SECTION XII - REGULATORY ACTIONS ON PCBs. 322

1.0 INTRODUCTION. 322

1.1 Measures Taken by the Manufacturers. 322
1.2 Measures Taken by the U.S. Government. 323

1.2.1 Food, Drug and Cosmetic Act (21 U.S.C. 301 et seg.). 323
1.2.2 The Egg, Meat and Poultry Acts 324
1.2.3 The Clean Air Act (42 U.S.C. 1857 et seg.). . . . 324
1.2.4 Federal Water Pollution Control Act (33 U.S.C. 466 et seg.) 325
1.2.5 The Refuse Act of 1899 (33 U.S.C. 407). 326
1.2.6 The Occupational Safety and Health Act (29 U.S.C. 651-678) 326
1.2.7 Act to Regulate Transportation of Explosives and Other Dangerous Articles (18 U.S.C. 831-835) 326
1.2.8 Federal Insecticide, Fungicide, and Rodenticide Act (FIFRA) (7 U.S.C. 135-135K). 327
1.2.9 Needs for Federal Control 327

1.3 International Decisions and Agreement. 328
1.4 Measures Taken by Foreign Governments 330

1.4.1 Measures Taken by Manufacturers - Limitations of Sales. 330

TABLE OF CONTENTS (Con't)

Page

SECTION XII (Con't)

1.4.2 Measures Taken by Some Governments 331

1.4.2.1 PCB Producing Countries 331
1.4.2.2 Non-Producing Countries 332

1.5 U.S. Customs Regulations 333

APPENDIX A - PCB ADSORPTION TESTING BY XAD-4 RESIN A-1

APPENDIX B - MACRORETICULAR RESINS FROM ROHN AND HAAS CO. B-1

APPENDIX C - NON-CARBON ADSORBTION AND OTHER RESEARCH STAGE PCB TREATMENT TECHNOLOGIES C-1

APPENDIX D - MASS BALANCE MODEL FOR PCB DISTRIBUTION D-1

APPENDIX E - BACKGROUND DATA USED TO CONSTRUCT THE MODEL FOR PCBs IN LAKE MICHIGAN E-1

APPENDIX F - TOXICOLOGICAL ASPECTS. F-1

LIST OF TABLES

		Page
SECTION II		
1.2-1	Estimates of Cumulative PCBs Production, Usage, and Gross Environmental Distribution in the United States Over the Period 1930-1975 in Millions of Pounds . . .	7
1.3-1	Estimated Production, Usage, and Losses of PCBs in the United States During 1974 in Millions of Pounds . . .	9
SECTION IV		
1.1-1	Empirical Formulation, Molecular Weights and Chlorine Percentage in PCBs	35
1.2-1	Approximate Molecular Composition of Selected Aroclors	36
1.2-2	High Resolution Gas Chromatography of Aroclor 1248 . .	37
1.3.1-1	Chemical and Physical Properties of Representative Aroclors	40
1.3.1-2	Electrical Properties of Some Aroclors	42
1.3.2-1	Solubility, Vapor Pressure and Halflife for Vaporization from Water of Selected Aroclors at 25°C.	43
1.3.2-2	Vaporization Rates of Aroclors	45
1.3.2-3	Percent Loss in Area of Seven Chromatogram Peaks of Aroclor After Heating.	46
1.3.2-4	Solubility of Chlorobiphenyls in Water	47
1.3.2-5	Relative Peak Heights (Peak 5 = 100) in Saturated Aqueous Solutions of Aroclor 1254.	48
SECTION V		
3.1.1-1	U.S. Capacitor Manufacturing Industry Using PCBs . . .	69
3.1.1.3-1	Non-Product PCB Discharges	77
3.1.1.3-2	Quantity of Waste Loads.	78
3.1.1.6-1	Range of Flow Rates & PCB Concentration in Effluents from Capacitor Manufacturing Plants.	81
3.1.1.6-2	Comparison of Discharges	82
3.1.1.6-3	Intake Water PCB Concentration	83
3.2.1-1	U.S. Transformer Manufacturing Industry Using PCBs . .	89
3.2.1.3-1	Non-Product PCB Discharges	99

LIST OF TABLES (Con't)

		Page
SECTION V (Con't)		
3.2.1.6-1	PCB Concentration in Effluents from Transformer Manufacturing Plants	104
3.2.1.6-2	Influent and Effluent Compositions of Plant 103 . . .	105
3.4-1	PCB Concentrations in Wisconsin Paper Plant Effluents.	130
3.4.1-1	History of Aroclor 1242 Consumption in the Manufacture of NCR Carbonless Paper for the Years 1957 through 1971	131
3.4.1-2	History of NCR Carbonless Paper Production for the Years 1957 through 1971	132
3.4.1-3	Ratio of Aroclor 1242 Consumption for Carbonless to NCR Carbonless Estimated Production.	133
3.4.2-1	Composition of Raw Water and Claifier Effluent	139
SECTION VI		
2.2.1.1-1	Carborundum Co. Tests of PCBs (Aroclor 1254) Removal from Water by an Experimental Activated Carbon . . .	157
2.2.1.2-1	ICI-US Tests of PCBs (Aroclor 1254) Removal from Water by Two Types of Commercial Carbons	159
2.2.1.3-1	Results of Calgon Corp. Laboratory Isotherm Tests for Carbon Removal of PCBs	162
2.2.2.5.1-1	UV Ozonolysis Destruction of Typical Capacitor and Transformer PCBs at Westgate Research.	180
2.2.2.5.2-1	Simulated Two-Stage, Continuous UV-Ozonation of a 5 Component Mix at Westgate Research Corp.	184
SECTION VII		
1.1-1	PCB & PCT Manufacture and PCB Sales Monsanto Industrial Chemicals Company (1957 thru 1964)	199
1.1-2	PCB & PCT Manufacture and PCB Sales Monsanto Industrial Chemicals Company (1965 thru 1974)	
1.1-3	PCB Manufacture and Sales Monsanto Industrial Chemicals Company (First Quarter - 1975)	205
1.1-4	End-Uses of PCTs and PCBs by Type	206

LIST OF TABLES (Con't)

		Page
SECTION VII (Con't)		
1.2-1	Production, Trade and Use of PCBs OECD Member Countries (1973)	208
1.3-1	Preliminary Summary of PCBs Import Data for 1971-75 Versus Monsanto Production and Sales Data	209
2-1	Total PCB Breakdown by Use (1966-1975)	212
SECTION VIII		
3.8-1	Properties of Transformer Liquids Tested by RTE Corporation	270
3.9-1	Relative Merits of Alternatives to the Use of Askarel Transformers in New Applications	272
SECTION IX		
1.1-1	PCB Environmental Load by Aroclor Type	288
1.1-2	Cumulative Environmental PCB Load by Chlorine Content	289
1.1-3	Computed Spectrum of Chlorine Content for Wild PCBs	290
SECTION X		
2.3-1	Physical Constants of Biphenyl	300
8-1	PCBs Concentration in the Effluents of the Machinery & Mechanical Products Manufacturing	311
SECTION XI		
2.1-1	Summary of PCB Input Sources (1973-1974) to Lake Michigan	317
3.0-1	Overall PCBs Balance for Lake Michigan Area During the Period 1930-1975	318
3.0-2	Derived PCB Concentrations in Lake Michigan Water and Biota Over the Period 1930-1975	318

LIST OF FIGURES

		Page
SECTION II		
1.0-1	U.S. Production and Usage of PCBs Summary Over 1972-75	6
SECTION IV		
1.2-1	Moieties from Which Principal Chlorobiphenyl Isomers are Formed	38
SECTION V		
2.1-1A	Preparation of Crude Chlorinated Biphenyls-Monsanto Krummrich Plant	55
2.1-1B	Distillation of Crude Products-Monsanto Krummrich Plant	55
2.2-1	Non-Product PCB Discharges at Monsanto's Krummrich Plant	58
2.4-1	Process Flow Diagram of the John Zink Incinerator at Monsanto's Krummrich Plant	61
3.1.1-1	Medium Size Industrial Capacitor	68
3.1.1.2-1	Generalized Flow Diagram for the Manufacturing of Large Capacitors	72
3.1.1.2-2	Generalized Flow Diagram for the Manufacturing of Small Capacitors	73
3.2.1-1	Substation Transformer	90
3.2.1.2.1-1	Transformer Filling With Vapor Phase Predrying of Interiors	93
3.2.1.2.1-2	Transformer Filling With Oven or Vacuum Chamber Predrying of Transformer Internals	96
3.2.1.2.1-3	Transformer Filling Operation With Oven Predrying of Assembled Hardware	97
3.2.1.3-1	Non-Product PCB Discharges	99
3.2.1.5-1	Process Flow Diagram for Thermal Oxidizer Incinerator at Plant 103	102

LIST OF FIGURES (Continued)

SECTION V (Continued) Page

3.2.2.2-1 Transformer Maintenance & Servicing 110

3.2.2.2-2 Transformer Repair. 111

3.3.2.1-1 Investment Shell Process 119

3.3.2.2-1 Flow Chart of PCBs Usage in Investment Casting . . 123

3.3.2.3-1 Idealized Flow Chart for an Investment Casting Foundry, Showing Waste Streams 126

3.4.2-1 Mill Fiber Recovery Process and Water Effluents . . 136

SECTION VI

2.2.1.3-1 Equilibrium Carbon Adsorption of PCBs From Water at Low Concentrations (Calgon Data) 163

2.2.2.4.1-1 Lab Scale Apparatus for Reaction and Mass Transfer Studies at Houston Research, Inc. 174

2.2.2.4.1-2 Aroclor 1254 Destruction by UV-Assisted Ozonation 175

2.2.2.4.2-1 Ozone Oxidation of Acetic Acid, Effect of UV and Temperature (Initial CH_3COOH-105 mg/l, O_3(l) = 3.5 mg/l) 176

2.2.2.4.2-2 Ozone/UV Oxidation of Acetic Acid; Effect of Increased Radiation Input 178

2.2.2.5.2-1 The Effect of UV Path Length on TOC Destruction . . 182

2.2.2.5.2-2 Schematic of Bench Reaction System at Westgate Research Corp. 183

2.2.3.1.2-1 PCBs Removal Process Concept Flow Sheet by Rohm and Haas Company 189

SECTION VII

1.1-1 U.S. Production of PCBs and PCTs and Domestic Sales and Exports of PCBs 201

1.1-2 U.S. Domestic Sales of PCBs by End Use Applications 202

LIST OF FIGURES (Continued)

SECTION VII (Continued — Page

1.1-3 U.S. Domestic Sales of PCBs by Type 203

2-1 Unbiased Extrapolations of Least-Square Linear Curves for PCB Production and Use in Electrical Equipment 214

ACKNOWLEDGEMENTS

The preparation of this report was accomplished through the efforts of the staff of Versar Inc., Springfield, Virginia, under the overall direction of Dr. Robert L. Durfee, Vice President.

The considerable aid furnished by personnel of the Environmental Protection Agency, Office of the Toxic Substances, is acknowledged. Mr. Tom Kopp served as Project Officer and provided guidance for the project effort.

Appreciation is extended to The Electric Industries Association, The National Electrical Manufacturers Association, The Investment Casting Institute, The Wisconsin Paper Council, and the many individual companies who gave us invaluable assistance and cooperation in this program.

Appreciation is also extended to the individuals of the Staff of Versar Inc., for their contributions and assistance during this program. Specifically, our thanks to:

Mr. James D. Barden, Environmental Engineer
Mrs. Gayaneh Y. Contos, Senior Chemical Engineer
Dr. E. Ellsworth Hackman III, Senior Scientist
Dr. Mohammad N. Khattak, Analytical and Environmental Chemist
Miss Susan A. Perlin, Environmental Engineer
Mr. Bennett Y. Ryan, Ecologist
Mr. Robert A. Westin, Senior Chemical Engineer
Dr. Frank C. Whitmore, Senior Scientist

Also our acknowledgement and appreciation is given to the secretarial staff of Versar Inc., for their efforts in the typing of drafts, necessary revisions and final preparation of this document. Our special thanks to:

Mrs. Nancy C. Downie
Mrs. B. Lynn Waller
Mrs. Lillette A. Steeves

SECTION I

INTRODUCTION

1.0 OVERVIEW OF THE PCBs PROBLEM

The term polychlorinated biphenyls (PCBs) refers to a family of organic chemicals which have been produced and marketed in this country for 45 years as a series of relatively complex mixtures under the trade name Aroclor. Each of these mixtures contains a number of chlorinated biphenyl isomers out of an overall range of chlorine content from one chlorine to ten chlorines per molecule. In general, higher chlorine content corresponds to greater resistance to chemical (and biochemical) degradation.

PCBs are among the stable organic compounds known, and, in addition, they exhibit other properties which render them extremely advantageous for use as dielectric and heat transfer fluids. These properties include low solubility in water, low vapor pressure, low flammability, high heat capacity, low electrical conductivity, favorable dielectric constant, and suitable viscosity-temperature relationships. Because of these properties, and also because PCBs exhibit little acute toxicity (toxic effects from high level, short term exposure), this family of materials has been extensively used in many industrial applications, primarily in "closed" or "semi-closed" systems such as electrical transformers and capacitors, heat transfer systems, and hydraulic systems. Most of the PCBs marketed to U.S. industry are still in service, primarily in electrical equipment. The remainder has entered the general environment; a significant fraction of this amount is present in air, water, soil, and sediment, but most of the PCBs in the environment are believed to be in landfills and dumps across the country.

In the late 1960's it became apparent that, although PCBs exhibit little acute toxicity, they are accumulated in the tissues of many biological species and do exhibit chronic (long-term) toxicity to many species even when the exposure is to very low concentrations. The effects of chronic PCB exposure may be considered as roughly comparable to those of DDT.

The recognition of this problem resulted in a major program designed to lessen the environmental stress arising from widespread use and dissemination of PCBs; by mid-1971, the Monsanto Industrial Chemicals Co., the sole U.S. producer, had voluntarily terminated sales of Aroclors (PCBs and polychlorinated triphenyls, or PCTs) for all but closed electrical systems uses. Monsanto also, in the same time frame, offered incineration services for waste liquid PCBs and terminated production of the most highly chlorinated Aroclors.

During 1972 and 1973, the Food and Drug Administration developed limitations on PCBs concentrations, designed to eliminate interstate transport of PCB contaminated foodstuffs, for a number of important dietary items and packaging materials used for foods. These limitations also reinforced the elimination of PCBs usage in the U.S. except for closed electrical systems.

After approximately five years of the voluntary industrial restrictions, and about three years following the FDA limitations, a National Conference on PCBs was held in Chicago during November, 1975, under the joint sponsorship of EPA and other Government agencies. By that time it had become apparent that, although dietary intake of PCBs had declined (apparently as a result of the FDA actions plus cooperation of the food and food packaging industries), improved analytical techniques plus more extensive monitoring efforts had revealed PCBs contamination at environmentally significant levels to be more widespread than originally thought.

Results presented at the Chicago meeting indicated PCB levels in the environment, on an overall basis, to have been more or less constant since 1971, although there were local instances of both increases and decreases in PCB levels. It thus appears that, unlike DDT, elimination of PCBs from dissipative uses has not resulted in a significant reduction in environmental load.

2.0 OBJECTIVE AND SCOPE OF THE REPORT

It was against the above background that the work upon which this report is based was performed. The objective of this report is to present the current state of knowledge about PCBs production, distribution, usage, and losses to

the environment in the United States. Many, but not all, of the facets of the PCBs problem are addressed; many of the estimates presented are based on engineering and scientific judgement instead of hard data, simply because hard data in these areas are not available. We hope that all assumptions and judgements in the report are clearly identified as such, and that sufficient supporting information, where available, is presented to justify the choices made.

While this report attempts to shed some light on the possible reasons why PCB levels in the environment are not decreasing as rapidly as had been hoped, its scope also includes a detailed presentation of past and present production and usage of PCBs in the United States, an analysis of PCB distribution and environmental transport as applied to Lake Michigan, a treatment in detail of potential substitutes and use alternatives, a discussion of the technical aspects of substitution, and discussions of various other aspects of the overall problem. Toxicological and human health aspects are not addressed; nor are the various current activities of EPA, other Government agencies, and individual states toward reducing entry of PCBs into the environment.

The information and data contained in the report were collected from personal interviews and telephone conversations with representatives of many of the firms handling or using PCBs, from trade associations, from the open literature, and from local, state, and Federal Government personnel, researchers, and other parties having interest in and information concerning the PCBs problem. Ten visits to plants were made; these covered the categories of PCBs production, small and large capacitor manufacturing, transformer manufacturing, investment casting, and waste disposal contracting (waste PCBs). The degree of cooperation, and therefore the accuracy of the data obtained, varied widely from industry to industry. Electric utilities provided key information, as did also other users or distributors of products containing PCBs.

SECTION II

SUMMARY

1.0 PRODUCTION, USAGE, AND DISTRIBUTION OF PCBs

1.1 Overview of PCBs Industrial Usage in the United States

Over the past four years the domestic production and use of polychlorinated biphenyls (PCBs) have been approximately constant with averages of 40 million pounds per year for production and 33 million pounds per year for domestic sales. During this period Monsanto Industrial Chemicals Corp., the sole domestic producer, has supplied approximately 99 per cent of the domestic market. Monsanto sells several PCB mixtures under the generic trade name Aroclor, and purchase has been limited to intended use in nominally closed electrical systems (transformers and capacitors) since 1971 under voluntary restrictions imposed by Monsanto.

The remainder of the domestic usage depends on imported PCBs, most of which originate in Italy and the remainder in France. Decachlorobiphenyl is imported from Italy for use in investment casting wax, and the material imported from France is used in cooling systems of mining machinery.

Of the domestic sales of PCBs, 65 to 70 per cent are to manufacturers of capacitors, and the remainder to manufacturers of transformers. Transformers, which contain 2,000 to 2,500 pounds of PCBs on the average (present as a 60 to 70 per cent component of mixtures with trichlorobenzene called Askarels) are used primarily to change voltages during the transmission and distribution of electrical power. Approximately five per cent of the transformers in service in this country contain PCBs; most transformers contain mineral oil instead of PCBs. Capacitors containing PCBs are of two general types; small capacitors which are built into electrical appliances such as fluorescent lights, TV sets and small motors, and large capacitors which are used as separate units in electrical power distribution systems and with large industrial machinery such as electric motors and welding machines. PCBs are used in about 95 per cent of U.S.-produced liquid impregnated capacitors (most small capacitors in radios and other electronic equipment are solid-state units).

PCBs are typically used in transformers where protection against fire is of paramount importance. Use of PCBs in capacitors is based on a number of factors, but fire protection and service life appear to be the most important. Industry codes, such as the National Electrical Code, specify the use of PCB-filled transformers and capacitors under a number of conditions. These codes will serve as institutional barriers to rapid reductions in PCBs usage, but at present there are also technical barriers to substitution of other materials for PCBs in electrical equipment.

The above overview of current PCBs usage in the U.S. is summarized by Figure 1.0-1, which traces domestic PCBs production and importation through first tier usage and distribution of PCBs - containing products.

1.2 Cumulative PCBs Production and Usage in the United States

Estimates developed for total PCBs production and utilization in the U.S. since their introduction to industry in 1929-30 are presented in Table 1.2-1. These data define the estimated proportions of PCBs used in various applications, and an accounting, based on available data plus estimates, of the current distribution of this material. Of the roughly 1.25 billion pounds purchased by U.S. industry, it is estimated that only 55 million pounds, or 4.4 per cent, have been destroyed by incineration or by degradation in the environment. About 60 per cent of the total domestic sales is still in service, almost all in capacitors and transformers. The remainder, about 44 million pounds, are in the environment; it is estimated that 290 million pounds are in landfills or dumps and 150 million pounds are "free" in the general environment (air, water, soil, sediments) and presumably available to the biota.

Some of the values in Table 1.2-1 are relatively well-established, while others are gross estimates resulting from a lack of data in the area. The estimated reliability for each value presented is shown on the table. For instance, the PCBs usage in carbonless copy paper is a firm value obtained from the only producer (NCR), where as the amount of PCBs environmentally degraded could conceivably range from a low value to the total of mono-, di-, and trichlorobiphenyl utilized but not still in service. The value for U.S. production could not be

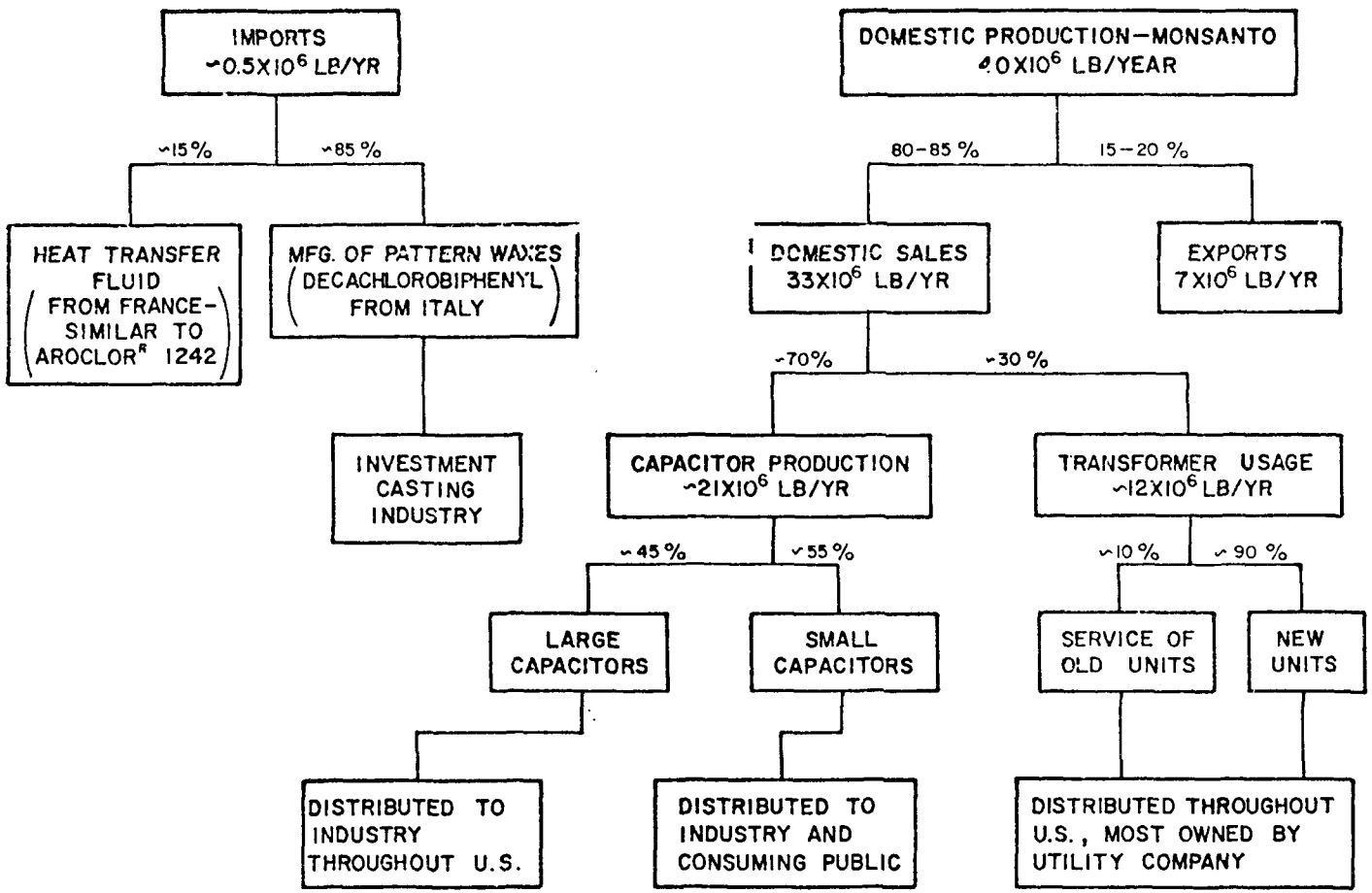

FIGURE 1.0-1. U.S. PRODUCTION AND USAGE OF PCBs SUMMARY OVER 1972-75

Table 1.2-1

Estimates of Cumulative PCBs Production, Usage, and Gross Environmental Distribution in the United States Over the Period 1930-1975 in Millions of Pounds

	Commercial Production	Commercial Sales	Industrial Purchases of PCB	PCBs Currently in Service	PCBs Currently in Environment	PCBs Destroyed	Estimated Reliability of Values
U.S. PCB Production	1,400						+ 5% - 20%
Total U.S. PCB Imports	3						± 30%
U.S. PCB Domestic Usage		1,253					+ 5% - 20%
Total U.S. PCB Exports		150					± 20%
PCB by Use Category:							
Petroleum Additives			1				± 50%
Heat Transfer			20				± 10%
Misc. Industrial			27				± 15%
Carbonless Copy Paper			45				± 5%
Hydraulics and Lubricants			80				± 10%
Other Plasticizer Uses			115				± 15%
Capacitors			630	450			± 20%
Transformers			335	300			± 20%
Uses Other than Electrical				8			± 60%
PCB Degraded or Incinerated:							
Environmentally Degraded						30	± 70%
Incinerated						25	± 10%
Landfills and PCBs in Dumps:							
Cap. and Trans. Production Wastes					110		± 20%
Obsolete Fle. Equipment					80		± 40%
Other (paper, plastic, etc.)					100		± 40%
Free PCBs in the Environment (soil, water, air, sediment)					150		± 30%
Total	1,403	1,403	1,253	758	440	55	

much over 1.45 billion pounds nor less than 1.1 billion pounds, based on analysis of other available or estimated data; hence, the estimated confidence interval for this value on Table 1.2-1 of +5 per cent and -20 per cent.

One of the more important conclusions from this work is the estimation of about two times the amount of PCBs in landfills and dumps as compared to the amount of PCBs already free in the environment. The material in land disposal sites may be considered a threat to become widely dispersed over a long period of time. The length of time required can only be guessed at, but is probably short in comparison to the time required for degradation of the PCBs by natural processes. Thus, release of the land disposal material through slow vaporization and leaching could very well worsen an already severe environmental problem.

1.3 Current Distribution of PCBs Usage and Associated Wastes

A material balance for PCBs production, sales, distribution, and wastes in 1974 is presented in Table 1.3-1. Reliability of the values were estimated as for the previous table. The amounts estimated to be land disposed, totaling 1.18 million pounds, do not include land disposal of previously used PCBs. However, the amounts listed under scrap PCBs incinerated account for all PCBs incineration in the U.S. during 1974 at the recommended temperature-time conditions (> 2000°F; > 1.5 seconds residence time). Of the total of 2.61 million pounds incinerated, the Monsanto facility accounted for over half. Other companies currently providing incineration services include General Electric, Rollins Environmental Services, and Chem-Trol Pollution Services, but the total number of such facilities known to be available in the U.S. is six.

1.4 Land Disposal and Environmental Load

The 1.18 million pounds per year of land-destined wastes estimated above is only a small portion of the total PCBs entering landfills and dumps yearly; the current estimated yearly rate of PCBs entering land disposal sites is about 12 million pounds. The largest source of this material is capacitors which have failed or become obsolete, or which are contained in obsolete equipment. Other important sources are industrial solid wastes from PCBs production and first-tier usage, and the total of other (non-electrical) municipal and industrial solid wastes.

Table 1.3-1

Estimated Production, Usage, and Losses of PCBs in the United States during 1974 in Millions of Pounds

	Production or Imports	Commercial Sales	Industrial Purchases by Category	Amount Disposed or Lost	Estimated Reliability of Values
Domestic Production	40.466*				± 10%
Total Imports	0.45				± 50%
Monsanto Domestic Sales		34.406*			± 10%
Exports		5.395*			± 10%
Import Sales		0.45			± 50%
From Mfg. Inventory, etc.		0.665*			± 10%
PCBs Usage by Product Category					
Capacitors			22.0		± 20%
Transformers			12.0		± 20%
Investment Casting Wax			0.4		± 20%
Other			0.05		± 70%
PCBs Disposal to Land (assume PCBs to be 30% of total solid wastes)					
From PCBs manufacture				0.03	± 50%
From capacitor industry				0.48	± 50%
From transformer industry				0.27	± 50%
From investment casting				0.4	± 30%
Incineration of Scrap PCBs					
From PCBs manufacture				0.52	± 15%
From capacitor industry				1.45	± 20%
From transformer industry				0.64	± 20%
Industrial Discharges to Water and Sewers (as PCBs)					
From PCBs manufacture				0.0011**	± 40%
From capacitor industry				0.0021**	± 60%
From transformer industry				0.0001**	± 60%
Spills during Transport				0.01	± 50%
Totals	40.916	40.916	35.45	3.80	

* From Monsanto data

** Developed from data supplied by industry. Most analyses for PCBs concentrations in industrial wastewaters are probably not more accurate than ± 50 per cent.

The total current environmental load of "Free" PCBs was estimated to be about 150 million pounds. An analysis of environment load (Free PCBs) average chlorine content per molecule indicated that, if mono-, di-, and trichloro isomers were disregarded, the average chlorine content of Free PCBs would be within seven per cent of the value for Aroclor 1254.

1.5 Foreign Production of PCBs

Known current producers of PCBs besides the United States include the United Kingdom, Czechoslovakia, France, Germany, Spain, and the U.S.S.R. Japan was a producer until 1972. In 1973, total foreign production of PCBs is estimated at 43 million pounds, corresponding to a 50 per cent reduction since 1971. On this basis, the U.S. production appears to be about half of the world total. Usage of PCBs in all countries is expected to decrease further as a result of recent findings on adverse environmental effects and potential human health hazards from PCBs, and this usage is expected to be essentially confined to use in capacitors and transformers.

2.0 CHARACTERIZATION OF INDUSTRY PRACTICE AND WASTE HANDLING FOR THE PCBs PRODUCER AND MAJOR FIRST-TIER USERS

2.1 Manufacture of PCBs and PCB-Containing Capacitors and Transformers

PCBs are produced domestically only by Monsanto at Sauget, Illinois. The process involves the batch chlorination of biphenyl and subsequent separation and purification of the desired chlorinated biphenyl fractions. The degree of chlorination is determined by the contact time in the reactor. Depending on the distance and size of shipment, transport is via tank car, tank truck, or common carrier (drums).

There are 17 capacitor plants and 18 transformer plants utilizing PCBs in the United States. Manufacture of both types of units involves initial preparation of internal and external cases, filling with PCBs under vacuum, cleaning and degreasing, and performance testing. The greatest PCB wastes occur in the filling operations. Filling of small capacitors (less than 2 pounds of PCBs) and most large capacitors is performed in chambers holding many small capacitors or fewer large ones. The chamber and the capacitors are evacuated and then flood-filled with the PCB liquid. Excess liquid is removed from the chamber, the filled

units are cleaned and sealed, and then the sealed units are degreased, painted, and tested. Transformers and the largest types of capacitors are filled individually after evacuation; this produces relatively less chance of PCBs loss than the flood-filling process.

Of the 38 plants in the above categories, 10 discharge their effluents into the water ways while the remainder discharge into the sewage treatment plants. All plants in these categories have discharges under heavy rainfall conditions. There are three types of waste materials generated at these plants that require treatment and proper handling in order to minimize the PCB into the environment. These are:

(a) Waste waters containing trace quantities of PCBs (10 to 500 ppb PCBs);

(b) Waste PCBs, scrap oils and small quantities of process water highly contaminated with PCBs; and

(c) Burnable and non-burnable solid materials contaminated with PCBs.

Quantitative estimates of these wastes are given below:

	Waste Loads, Daily Average		
	PCB Discharge in Waterways or Sewers	Land-Destined PCB Wastes	Scrap Oils to Incineration
PCB Manufacturer	3.06 lbs	301 lbs	1425 lbs
Capacitor Industries	5.86 lbs	4440 lbs	3968 lbs
Transformer Industries	0.17 lbs	Unknown	1750 lbs

The above waste loads represent current industrial practice. It may be assumed that, prior to knowledge of the adverse environmental effects of PCBs, much of the types of material currently landfilled or incinerated was not disposed of properly and thus entered the environment directly.

As yet, very little is being done at these plants to control air emissions. The general industry assumption is that the vapor pressure of PCBs is so low that there will be essentially no air contamination. A few facilities, however, were reported to be filtering and chilling exhaust air from PCBs impregnation areas,

and plant personnel are beginning to realize that evaporation of PCBs may make a significant contribution to general contamination of the plant area.

Since most water used at these facilities is for non-contact cooling purposes, at most plants it is possible to significantly reduce the effluent volume by segregation of wastewaters, recycling and proper housekeeping measures. Most user plants and the PCB producing plants have already undertaken PCBs containment programs in order to minimize the entry of PCBs into the environment. While the emissions of PCBs to water are expected to decrease due to improved pollution abatement of waterborne wastes, the release of PCBs to air and land may increase. One potential source of increasing air emissions is the increase in incineration due to proper handling of wastes which were previously discharged into the waterways or sewers. The quantities of land-destined wastes are expected to increase due to improved housekeeping measures.

Rivers receiving PCBs discharges for a number of years vary greatly in PCBs content with time, apparently depending upon PCB content in storm water runoff and the degree to which contaminated bottom sediments are agitated and suspended. Whereever there have been PCB operations in the past, there are probably high concentrations in local waterways bottom sediments.

Over the past 45 years, waste PCBs from transformer and capacitor operations have been used as local road oiling compounds. Sometimes they were discarded in dumps adjacent to manufacturing facilities. These are sources of long term leaching of PCBs into waterways, particularly with storm water runoff.

2.2 Treatment and Disposal of Industrial Wastes Containing PCBs

A study was performed to determine and compare the methods available for the treatment of PCB-containing wastes from the PCBs production, capacitor manufacturing, and transformer manufacturing industry categories. A full treatment of this technology, including cost estimates for treatment, may be found in the Task II Report under Contract 68-01-3259. Much of the technical portion of this work is reproduced herein and summarized below.

2.2.1 Incineration

The most advanced treatment technology in use is incineration. The PCBs manufacturer and one user have plant scale facilities capable of destroying PCBs with very high efficiency. There are at least two commercial services available, with four incinerator locations in the Eastern and Southern U.S., for PCBs incineration.

Incineration is primarily applicable to waste PCBs and scrap oils contaminated with PCBs. Incinerators for PCBs destruction have the capacity of "burning" some contaminated wastewater but, of course, the proportion of that water to the exothermic oil burning must be kept low. Only one commercial incineration service (Rollins) can routinely handle all kinds of PCBs contaminated transformer and capacitor components, sludges, fuller's earth and other solids, as long as they can be contained in a 47 gallon fiber drum. One PCB user company incinerates transformer internals for purposes of metal recovery.

Waste liquid PCBs and scrap oils (contaminated PCBs) are best handled, as a guideline, by high temperature (2000-2400°F) and long residence time (2-3 seconds) incineration. However, because of incinerator design variables, the conditions should be chosen in each case to lead to 99.999% destruction. The best incinerator combination for handling wastes from these industries is a rotary burner fired by a liquid burner, and followed by an afterburner and scrubber system for HCl and particulate control. The rotary burner can be designed to handle a variety of solid materials, and the liquid burner can handle both the oily and water type wastes.

2.2.2 Treatment of PCB-Contaminated Wastewater

There is no commercial scale wastewater treatment for PCBs removal being practiced beyond those of gravity settling of the heavy PCBs layers as a sludge from the bottom of sumps or tanks, and skimming of a contaminated oil-layer from the water surfaces.

Adequate methodology is available for those plants wishing to control the release of PCBs to the environment. Currently available technologies can

be applied to the efficient removal of PCBs from wastes, or their destruction with the other wastes. The PCBs content of wastewaters can be lowered to the 1 ppb level or below by removal of solids (and oil layers, where applicable), followed by adsorption of PCBs onto carbon, macroreticular polymer resins or possibly other adsorbents.

Carbon adsorption is currently the best available technology for plant scale treatment of PCBs wastewaters. This conclusion is based on laboratory tests with PCBs in water, and on the long background of plant scale use of carbon adsorption for removal of organics from water.

Polymeric resins (AMBERLITES) were found in laboratory tests to be approximately as effective as carbon in removing PCBs from water. Further pilot scale testing is needed with this newer (than carbon) technology to accurately assess its potential.

Ultraviolet catalyzed ozonation was determined to be the best method, demonstrated on a laboratory scale, for destruction of PCBs in wastewaters when the streams occur in large volume, on a relatively continuous flow basis and with PCBs at the ppb concentration levels. This technology has the potential for conversion of PCBs to CO_2, H_2O and HCl. However, significant development and optimization work would be required before application of the process becomes practical. In addition, the potential exists for production of toxic degradation products by UV-ozonation.

Although still in the laboratory stage, catalytic reduction of PCBs offers the possibility of reduction to biphenyl and HCl; and catalytic oxidation is another process which offers a potential for destruction of PCBs to CO_2, H_2O and HCl.

It is believed that wastewater treatment systems employing activated carbon and possibly UV-ozonation could produce effluents which would be at or below the limits of detectability for PCBs with current analytical techniques. However, since no full scale systems for the treatment of PCBs are in operation at this time, this possibility cannot be confirmed.

Unfortunately, no methodology is presently available which can guarantee "zero discharge" of PCBs to the environment. "Zero discharge" objectives can be best met now by eliminating discharge streams and developing recycle systems. All streams that are high in pollutants and cannot be treated for reuse, including rainwater runoffs, could be collected and incinerated under a "zero discharge" objective.

2.3 Characterization of the Investment Casting Industry

Investment casting is a lost-wax process by which metal castings which are of intricate shapes or which require close dimensional tolerances are mass-produced. The pattern wax, some of which contains PCB filler, is molded and then used to make a ceramic shell (investment) whose internal dimensions are those of the desired product. The wax is typically melted from the shell, and the shell is fired (sintered), which removes the last traces of the wax. Then molten metal is poured into the mold (shell) and cooled to form the castings.

There are currently 135 investment casting foundries and four major investment casting wax manufacturing plants in the United States. The Yates Manufacturing Company, Chicago, Ill., is the sole known U.S. supplier of decachlorobiphenyl (deka) waxes. The deka content is 30 per cent of the total wax by weight. Yates currently imports deka from Italy and manufactures between 1 and 1.5 million pounds of deka wax annually. Very little is known about the wax manufacturing process. Wax manufacturers are also believed to use polychlorinated terphenyls (PCTs) imported from France.

The major losses of the virgin and used waxes appear to occur during the dewaxing of the ceramic mold. The mold is fired in a furnace to set the mold and remove the wax. Depending on furnace conditions, the deka or PCT in the wax is either burned or released to the atmosphere. The magnitude of these emissions is not known.

Most foundries recover the drained pattern wax and reuse it several times. It is estimated that the purchased wax is used an average of 2.5 times. Little of the wax is destroyed in the process; therefore, it is considered probable that the investment casting foundries store or dispose of relatively large amounts of used PCB- or PCT-containing wax.

2.4 Transformer Service Industry

Most servicing of transformers is performed by electrical repair shops rather than by the utility or the owner of the transformer. Thirteen companies were identified as offering transformer service at a total of 131 locations. Servicing of askarel-filled transformers may include the filtering of the askarel to remove degradation products and moisture or the replacement of the askarel with new liquid. PCB wastes include filter media, scrapped askarel, and miscellaneous solvents, rags, etc. The proper disposal of these wastes is specified by a voluntary NEMA standard. Liquid PCBs are incinerated in most, but not all, cases. The total usage of PCBs by the transformer repair industry is about 800,000 lb/year, or about seven per cent of the amount used to manufacture new transformers.

3.0 SUBSTITUTES AND USE ALTERNATIVES FOR PCBs

Potential substitute materials and use or process alternatives which would eliminate or reduce the current requirements for PCBs were investigated. Important points from this study are summarized below.

3.1 Substitutes for PCBs in Capacitors

PCBs (primarily Aroclor 1016) are currently used in almost all U.S.-made capacitors for AC service (liquid-filled capacitors) and are uniquely suited for this application because of their high dielectric constant, high resistance to current flow and electrical breakdown, chemical stability, and non-flammability. A number of different liquid materials now under development or testing have been proposed as substitutes for PCBs in capacitors, including phthalate esters, synthetic hydrocarbons, alkylated chlorodiphenyl oxide, alkylated PCBs, diaryl sulfones, and silicones.

Since each of these materials is relatively more flammable than Aroclor 1016, it appears that use of any liquid substitute will probably pose more of a fire hazard than use of PCBs. Vulnerability of capacitor manufacturers to liability for damages from capacitor failure is a major factor in industry acceptance of a substitute capacitor fluid. The conservative code structure now in force could also pose significant barriers to reduction or elimination of PCBs usage in

capacitors. In addition, data on electrical performance, toxicity to humans, and environmental effects of the potential substitutes are not presently sufficient to allow meaningful comparisons with PCBs.

Dry AC capacitors (film-type) are in the development stage. These capacitors are significantly larger than liquid-filled capacitors and are limited to a maximum of 280 volts. Satisfactory dry film capacitors will not be available until there are two separate technological breakthroughs: 1) the development of a plastic film that combines a high dielectric constant with a low loss-tangent; and 2) the development of winding techniques that exclude all air from the winding of the capacitor.

Although it is considered probable that satisfactory substitutes for PCBs will be developed within the next 5 years, no such material is presently available and much additional research remains to be done. On the other hand, a significant portion of the large capacitors used by utilities, and some in industry, are situated out-of-doors. These could be replaced by capacitors containing a more flammable fluid without significantly increasing the risk of fire.

Although direct replacement of existing PCB-filled capacitors with units containing substitutes appears possible for many large capacitors, anticipated size differences will present severe problems in retrofitting. The new fluids also cannot be directly substituted for PCBs in existing capacitors. In addition, disposal of obsolete or replaced units will probably be in landfills for many years to come. It is probable that the best replacement scheme for capacitors, assuming cessation of PCBs production and use, would be use of non-PCB replacements as units become obsolete or fail.

3.2 Substitutes for PCBs in Transformers

Aroclors 1242 and 1254 are currently used in about five per cent of U.S.-built transformers; most transformers are cooled with mineral oil. Transformers filled with askarel (60-70 per cent PCBs) are often specified for use in buildings and in hazardous locations where minimization of the fire hazard is of paramount importance. The National Fire Code requires that oil-filled units, and askarel-filled units rated for service over 35 kV, be enclosed in fireproof vaults when

used in buildings. For units below 35 kV, the higher cost (by 20 to 30 per cent) of an askarel unit is more than offset by the savings on vault construction.

Open, air-cooled transformers are limited to a clean, dry environments, but are being increasingly used in commercial buildings. Closed, gas-cooled transformers are more expensive than askarel units. Both of the above types have voltage limitations and much less overload capacity than the askarel-filled type.

Several substitute liquids have been suggested for use in transformers which are less flammable than the currently used mineral oil, but which are more flammable than askarel. The most promising are a silicone oil and a synthetic paraffinic hydrocarbon. These liquids are characterized as being self extinguishing - i.e., they do not continue to burn after being ignited by a momentary electrical arc. Proposals have been submitted to the National Electrical Code to allow the use of these self extinguishing materials under those conditions where askarels are presently specified. Because of the relative lack of service experience with these liquids, it is unlikely that these proposals will be accepted. The next Code revision (1978) will probably continue to recognize only askarel and "oil filled" transformers.

It is likely that the "self extinguishing" liquids will prove to be satisfactory alternatives to PCBs. Substantial experience on the performance of the liquids will be required before the code requirements will be changed to allow their use. The restrictive Electrical Code, which has been incorporated into the OSHA Standards, may act to inhibit the accumulation of this data and thereby act to postpone the general acceptance of these substitutes for PCBs.

The major conclusion from this portion of the study was that technically acceptable alternatives to the use of PCBs in transformers exist and that their use should not result in a significant increase in fire hazards from transformer failure. At present the selection of PCB (askarel) transformers appears to be based primarily on cost rather than technical considerations.

As with capacitors, direct replacement of PCBs in existing transformers would present potentially severe problems. These include the extreme difficulty of removing more than 90-95 per cent of the PCBs, even by repeated flushing with

a compatible solvent (trichlorobenzene), and the requirements of incinerating such large quantities of PCBs and contaminated solvent.

3.3 Alternatives to Other PCBs Applications

On a preliminary basis, there appear to be no overriding technical (or institutional) barriers to the use of alternatives to decachlorobiphenyl filler in investment casting waxes. (This also appears to be the case for the polychlorinated terphenyls.) Potential alternatives include use of materials such as isophthalic acid as the filler and use of the new low-shrinkage unfilled waxes. A cost increase of about ten per cent is projected for each of the above alternatives.

Since the voluntary restriction by Monsanto in 1971 of PCBs sales for use in closed electrical systems only, PCBs have largely been eliminated from usage in hydraulic and heat transfer systems. Adequate substitutes were generally available at the time of the Monsanto restriction, and the present usage of PCBs (believed to be minor) should be replaceable by alternatives with minimal disadvantage.

4.0 SOURCES OF INADVERTENT ENTRY OF PCBs INTO THE ENVIRONMENT

4.1 Paper Recycling

Over the period 1957 to 1971, approximately 45 million pounds of Aroclor 1242 was used by a single producer (NCR) in the production of carbonless copy paper. Some fraction of this material has entered the paper recycling stream and is apparently a major source of observed PCBs contamination of effluents from the secondary fiber recovery industry. PCBs were also added to paper in inks and possibly in other additives; this material was probably Aroclor 1254.

Thus, in its effort to conserve resources profitably, the secondary fiber recovery (paper recycling) industry is inadvertently releasing previously used and "stored" PCBs into the general environment, primarily to water. Reliable estimates of the amounts of PCBs so released are not available, and, although the significance of this release should diminish as office files are emptied, the amounts remaining to be released are not known.

Results from an analysis of PCBs entering Lake Michigan, discussed later in Section 5.0, indicate that, although there is a significant concentration of paper recycling activities in the area of this lake, the contribution of paper mills to the total PCBs input to Lake Michigan is small in comparison to atmospheric fallout. However, effluents containing amounts of PCBs which are very small compared to the total environmental load can be extremely important on a local basis, and further investigation of this problem is urged.

It should be noted that water usage in the paper recycling industry is high and effluent PCB concentrations are typically 5 to 10 ppb. The cost of PCBs removal would therefore probably be higher per unit of profit than for the other industry categories described herein.

4.2 Effluent Contamination by PCBs in Other Industries

High concentrations of PCBs were recently reported in effluents from a number of plants engaged in the manufacture of machinery and mechanical products. These measurements have not been verified to data. PCBs were, in the past, used extensively in hydraulic and heat transfer systems, in lubricants, and in paints and plastics, so that it is not inconsistent that effluents from the machinery manufacturing industry contain PCBs. PCB contamination of effluents is known to have occurred via slow release of old deposits in sewers and elsewhere, although industrial usage in semi-open applications is believed to be continuing at a low level.

4.3 Inadvertent Production of PCBs in the Environment

Three general types of reactions were considered as potential sources of inadvertent production of PCBs. Of the three, the one considered most likely to occur is chlorination of biphenyl in wastewater during treatment. This refers specifically to the discharge of wastewater containing biphenyl to a municipal sewer and the subsequent chlorination of the material in the treatment plant.

Biphenyl is used extensively as a dye carrier for the dyeing of synthetic fibers; in this application, much of the biphenyl leaves the process as waste. The estimated U.S. industrial usage of biphenyl is about 50 million pounds per year, of which at least half is used in dyeing operations. Although chlorination of

biphenyl in sewage treatment appears likely, the extent of neither the initial chlorination nor further chlorination is known. Further investigation of biphenyl chlorination as a possible source of PCBs is recommended.

Chlorinated biphenyls have been produced by the decomposition of DDT, although this requires recombination of phenyl radicals from cleavage of two DDT molecules. Significant production of PCBs in the environment by this mechanism is considered unlikely. Formation of PCBs via chlorination of the product formed from the combination of two substituted benzenes is also considered of less potential significance than direct chlorination of biphenyl in wastewater.

5.0 TRANSPORT AND DISTRIBUTION OF PCBs IN THE ENVIRONMENT

A first order mass balance model was developed and used to study the transport and distribution of PCBs in the environment. The total environmental load of "free" PCBs was regarded as a "pool" of mixed PCBs. In applying the model, the pool was assumed to exhibit properties roughly similar to those of Aroclor 1254. The model was applied to Lake Michigan; the boundaries of the region studied were taken to be the drainage basin of the lake. Lake Michigan is a nearly closed body of water of sufficient size to allow averaging of properties and of sufficient interest that some pertinent data were available.

The estimated total input of PCBs to Lake Michigan (1973-1974) was 13,400 lb/yr, of which 1,600 lb/yr came from point sources (summation of industrial and municipal discharges reaching the lake), 6,400 lb/yr represented fallout directly onto the lake, and 5,400 lb/yr was derived from fallout on the drainage basin (assumed to be 50 per cent of total fallout on the basin). Thus, it is estimated that about 88 per cent of the PCBs currently entering Lake Michigan arise from fallout.

Application of the model produced the following cumulative values for the period 1930 to 1975 (input function assumed proportional to domestic sales):

Total input	1.49×10^5 lb
Total in solution	1.0×10^5 lb
Total in biota	3.64×10^3 lb
Total in sediments	1.7×10^4 lb

Total in outflow	9.07×10^3 lb
Total evaporated	1.93×10^4 lb

Since degradation of PCBs in the lake was assumed to be zero, the closing of the material balance depended upon total evaporation from the lake being 1.93×10^4 pounds, or about 13 per cent of the total input. This value is in excellent agreement with values derived both from kinetic theory and from co-distillation theory; this result substantiates both the model form and the material balance above.

Average water and biota concentrations derived from the analysis (using a bioconcentration factor over water of 4×10^4) are, for recent years:

	Water Conc. (ppt)	Biota Conc. (ppb)
1960	1.60	64
1965	2.92	117
1970	5.35	214
1975	9.10	364

The above agrees well with available data on lake and biotic concentrations since 1970.

Mean residence times of PCBs in air and water, and the transport mechanisms which operate at the various phase interfaces, are very important to the understanding of environmental transport and distribution. Lifetime values are extremely sensitive to the assumptions required for their calculation (required because of the lack of adequate experimental data). Estimates derived from work by others range from 20 days to eight years for the average lifetime to fallout of airborne PCBs. Residence times to evaporation in Lake Michigan appear to be on the order of ten hours, based on theoretical calculations, whereas residence times to evaporation from sea water may be one to two orders of magnitude lower.

The picture of gross PCBs transport consistent with all of the above findings is the one dominated by air transport. Terrestial components, including fresh water, are partial sinks responding primarily to input from fallout. Losses are to evaporation and to rivers, which enter the oceans where further (possibly rapid)

evaporation occurs. Degradation of PCBs, which was assumed to be zero in the Lake Michigan analysis, appears too slow to have a significant effect. Industrial and municipal effluents and air emissions are sources of both old and new PCBs; large amounts enter landfills and a small fraction enters the cycle through leaching and evaporation.

If the above is even partially correct, then one possible answer to the question of why the restriction on uses beginning in 1971 has not caused the hoped for diminution in PCBs distribution is as follows:

(1) The systems which cause concern with regard to PCBs (freshwater systems and associated biota) serve as sinks for PCBs;
(2) Other possible sinks are not available or are ineffective in retaining PCBs; and
(3) The environmental degradation of PCBs is too slow to be significant over a five year period.

Further work in many aspects of PCBs transport and distribution are needed in order to estimate the real magnitude of the future environmental problem from these materials. Such work should also assist in identifying potential methods for reducing the environmental load of PCBs.

6.0 REGULATORY ACTIONS ON PCBs

Four government agencies, the Monsanto Company and NEMA comprise the regulatory forces currently restricting the use and distribution of PCBs. EPA, OSHA, FDA and USDA have, between them, authority to regulate and monitor food levels, disposal into waterways, industrial housekeeping, and safety practices in the work place. Each of these available authorities has a limited focus and is inadequate to prevent more PCBs from entering the environment.

There are currently no regulations to restrict the importation of PCBs as a chemical for use in applications banned by the Monsanto Company. As a result, PCB is being imported by a few companies for use in several "open-end" or "nominally-closed" applications.

Several producing nations have voluntarily limited sales of PCBs. Since 1972, Japan has banned production and importation of PCBs. The United Kingdom has barred sales of PCBs to all applications except usage as dielectric fluids, while Germany has lessened this restrictive measure to include use in heat transfer and hydraulic systems. Among non-producing countries, Sweden and Norway have stringent regulations. In Sweden, only the Environmental Protection Board can authorize the use of PCBs or compounds containing PCBs, while in Norway only the Ministry of Social Affairs can authorize the use of PCBs.

SECTION III

CONCLUSIONS AND RECOMMENDATIONS

1.0 Conclusions

Conclusions which have resulted directly from the work reported herein are presented below. Some of these have been discussed briefly in the preceding section, but each is believed to be justified by information contained in the text of the report and the appendices.

(1) It is estimated that approximately 1.25 billion pounds of PCBs have been sold for industrial use in the U.S. since initiation of production around 1930.

(2) Of this amount, at least 95 per cent are still in existence; most is in service in capacitors and transformers, but about 290 million pounds are believed to reside in landfills and dumps and about 150 million are believed to be "free" in the environment. The magnitude of these values indicates that there is a strong future threat from PCBs present in land disposal sites.

(3) In 1974, U.S. usage of PCBs sold by Monsanto, the sole domestic producer, was distributed between capacitor manufacture (22 million pounds) and transformer manufacture (12 million pounds). Imported materials amounted to about one per cent of U.S. industrial purchases of PCBs in 1974; about 400,000 pounds (of decachlorobiphenyl) were used in investment casting and and an estimated 50,000 pounds of new material were used in specialized heat transfer systems.

(4) Waterborne effluents from PCBs production and first-tier use currently release amounts to the environment which are very small in comparison to the amounts entering land disposal sites from these industries. However, these effluents can have severe local impacts, as evidenced by the current PCBs problem in the Hudson River.

(5) Monsanto and portions of the electrical equipment industry utilizing PCBs have greatly reduced PCB releases to water and land over the past few years, primarily through improvement of plant housekeeping, improved waste collection and handling, and disposal of liquid wastes through incineration.

(6) There is no plant-scale process used at present for the specific purpose of removing PCBs from industrial wastewater.

(7) The best available treatment technology for removal of PCBs from wastewater is carbon adsorption coupled with solids and oil/grease removal. Carbon treatment can produce end-of-pipe PCBs concentrations of one ppb or less. Other adsorbents, such as resins, also appear effective to this extent.

(8) The most promising method, of those water treatment technologies under development, for PCBs destruction is ultraviolet-catalyzed ozonation.

(9) Incineration is an effective method of disposal for liquid PCBs. Landfilling is the only generally available disposal method for PCBs-contaminated solid wastes, but incineration of these wastes is technically feasible.

(10) "Zero discharge" to water of PCBs from production and first-tier use is available only through extensive water reuse plus extensive incineration of lightly contaminated wastewaters.

(11) Significant amounts of solid PCB (decachlorobiphenyl, or deka) wastes are stored or disposed of on land by the investment casting industry. Air emissions of deka may also be significant in amount, but no evidence of potential health hazards from this material has been reported.

(12) The total present usage of PCBs for open and semi-closed applications is not known but is believed to be small in comparison to closed electrical system usage. A few capacitor manufacturing

plants report recent use of PCBs in vacuum pumps, and a significant amount of carbonless copy paper containing PCBs must still be in inventory and in files.

(13) Chlorination of waste biphenyl in industrial wastewaters discharged into municipal sewers is a potential mechanism for inadvertent production of PCBs.

(14) PCBs are uniquely suited to the requirements of capacitors for AC service. Although a number of potential substitutes for this application are under development and test, they are all more flammable than Aroclor 1016 and neither their performance in service nor their potential toxicity to man and other species have been evaluated sufficiently to allow a definitive comparison with 1016.

(15) Alternatives to PCBs usage in new transformers are available. In addition, testing of promising substitute fluids (termed "self-extinguishing") is underway; these fluids may gain industry-wide acceptance within three years as substitutes for PCB fluids. At present, specification of PCB-filled transformers appears to be based primarily on cost considerations.

(16) No technical barriers to substitution for PCBs (deka) in investment casting waxes are apparent. Several potential alternatives have been previously used by this industry.

(17) Atmospheric fallout is a major source of PCBs input to fresh water systems. In Lake Michigan, the PCBs contribution at present appears to be much larger than the total of PCBs inputs from point sources such as municipal sewage treatment and paper recycling.

(18) The importance of atmospheric transport of PCBs relative to other potential inputs to water indicates that the availability of environmental sinks from PCBs is limited, possibly due to short residence times to evaporation in sea water.

(19) At present, regulatory authority over PCBs in the United States is insufficient to significantly reduce future PCBs inputs to the environment, although inputs directly to the waterways from industrial sources can be reduced from their present level. Current disposal practices, except for incineration, tend to delay instead of prevent the PCBs entry into the "free" (available to the biota) state, and these practices are regulated only minimally.

2.0 RECOMMENDATIONS

During December, 1975 and January, 1976, EPA Administrator Russell Train called for a cooperative effort between Government and industry to eventually eliminate PCBs from production and usage in the United States. The recommendations listed below were developed with this objective in mind, although each recommendation also reflects the still existing needs for further definition of the current and future PCBs problem and for the development of methods for reducing the potential damage to human health and the environment.

(1) The current distribution and losses to the environment of PCBs should be defined more accurately. Study is needed for the following aspects of past and present usage:

(a) Present extent and distribution of usage in semi-closed systems such as heat transfer and hydraulic systems (dissemination of information concerning PCBs effects and available substitutes will result in voluntary reduction of PCBs usage);

(b) Definition of past and present usage in investment casting, including quantification of air emissions, disposal on land, and waterborne contamination;

(c) Present distribution and projected future trends for PCBs in the pulp and paper industry, especially the secondary fiber recovery portion; and

(d) Extent of inadvertent PCBs contamination in effluents from other industries which are currently not purchasers of PCBs.

(2) The basic transport properties of PCBs, particularly those relating to evaporation and atmospheric fallout, should be studied in depth. This and other information should be used to investigate global transport characteristics of PCBs and to predict the potential magnitude of the global PCBs problem. Potential sinks and destruction methods for PCBs should be investigated.

(3) The type of analysis presented herein for Lake Michigan should be further expanded and refined for application to other important fresh water systems. The model should be extended to a prediction of future effects and the influence of possible reductions in PCBs usage.

(4) Transport of PCBs from landfills should be investigated; in particular, potential methods for delaying or reducing PCBs release from landfills should be studied.

(5) Development and testing of potential substitutes for PCBs in capacitors, transformers, and investment casting waxes should be encouraged strongly. Technical and institutional barriers to the use of alternatives should be attacked on all possible fronts as soon as possible. Extensive toxicological testing of proposed substitute materials should be performed prior to acceptance.

(6) Methods for treatment of PCBs-contaminated water effluent should be developed and applied. Research and development activities on directly destructive treatment methods, such as UV-assisted ozonation and catalytic oxidation or reduction should be encouraged, but further work on adsorptive techniques is also needed.

(7) Alternative approaches and schedules for PCBs elimination from U.S. commerce should be evaluated with regard to technical feasibility, institutional acceptability, and economic and environmental impact. Based on these considerations, an optimized path to PCBs elimination should be developed.

(8) Possible inadvertent formation of PCBs in the environment should be studied; in particular, it is recommended that the chlorination of biphenyl in wastewaters be evaluated as a potential source of PCBs.

SECTION IV
CHEMICAL AND PHYSICAL PROPERTIES OF CHLORINATED BIPHENYLS

1.0 INTRODUCTION

The purpose of this section is to present a précis of the salient characteristics of the commercial preparations of the polychlorinated biphenyls which have generated concern as environmental pollutants. The emphasis is directed to those properties that have led to the relatively widespread use of these materials. In addition, attention will also be directed to those physical and chemical properties that contribute to the environmental effects arising from the general distribution of these materials. The discussion is not meant to be exhaustive, but rather to offer the basic technical information that is used to support the other sections of the total report. The most complete compilation of the relevant information that has been published to date is that by Hutzinger et al (O. Hutzinger, S. Safe, and V. Zitko, "The Chemistry of PCBs", CRC Press, 1974) and the authors express their debt to this publication.

1.1 The Chemistry of the Chlorinated Biphenyls

The polychlorinated biphenyls (PCBs) constitute a large class of compounds produced by the partial (or complete) chlorination of the biphenyl molecule. Since their introduction in 1929 in commercial quantities, these compounds, or rather commercial mixtures of various members of the class, have been applied in a considerable variety of industrial applications. The unique physical and chemical properties of these compounds, including low vapor pressure at ambient temperatures; resistance to combustion; remarkable chemical stability; high dielectric constant and high specific electrical resistivity have been utilized in such applications as electrical insulating fluids; fire resistant heat transfer and hydraulic fluids; lubricants for use at high temperatures and pressures in critical applications and as a constituent in a variety of elastomers, adhesives, paints, lacquers, varnishes, pigments and waxes.

PCBs and mixtures of chlorobiphenyls have been produced in a number of countries and marketed under several trade names including Aroclor, Clophen, Phenoclor, Kanechlor and Fenclor. The essential characteristics of all these mixtures, which depend in detail on the specific mixtures of chlorobiphenyls that make up the specific preparation, are sufficiently alike that it will suffice to discuss all in terms of the Aroclors, which is the trade name of the preparations of Monsanto Chemical Company. In those special cases wherein there is some particular property peculiar to one of the foreign PCB mixtures, a note will be made.

A great deal of confusion has appeared in the literature because of the nomenclature that is used to describe the commercial preparations and the individual authenticated chlorobiphenyls. In order to clarify the nomenclature to be used herein, it is appropriate to digress briefly as follows. The biphenyl molecule has a total of ten (10) carbon-hydrogen bonds at which chlorine substitution can be accommodated. A schematic representation of the biphenyl molecule with the various positions at which substitution can be accomplished numbered in the American Chemical Society standard notation is presented below:

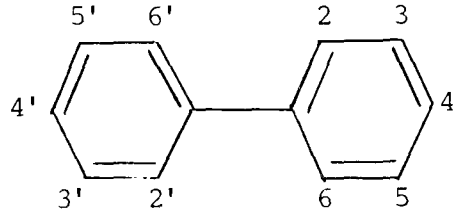

ACS Convention for Numerical Assignments
of Biphenyl Substitution

In the interest of a common usage, the following rules will be followed in this report:

a. When referring to a mixture of different species, as occurs in the commercial products, we will use the term polychlorinated biphenyls or the acronym PCB.

b. Those species of chlorinated compounds that arise from a specified number of chlorine substituents on the biphenyl molecule will be referred to as chlorobiphenyls with a suitable numerical prefix to define the number of substituted chlorines; i.e., dichlorobiphenyl. Thus, there are a total of ten (10) chlorobiphenyls that might appear in the commerical mixtures.

c. Those specific compounds that represent the class of compounds formed by a specific number of substituent chlorine atoms but differ in the locations at which substitution has taken place are referred to as isomers.

Thus, in terms of the above, the proper manner of referring to a commercial PCB mixture is as a "mixture of chlorobiphenyls containing various proportions of the iosmers of each".

To illustrate the utility of the numbering system indicated previously, the correct names of the compounds shown below are:

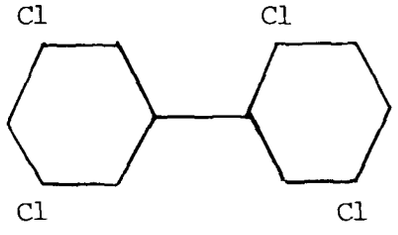

2,3',5,5'-tetrachlorobiphenyl

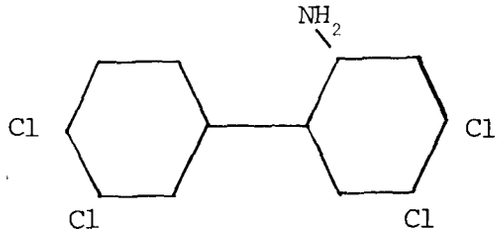

3',4,4',5-tetrachloro-2-biphenylamine

The ten chlorobiphenyls and some of the salient chemical data are listed in Table 1.1-1; note that the total of all the isomers of the chlorobiphenyls are 209 separate compounds.

1.2 Commercial Production and Chemical Makeup of the Aroclors

The commercial process by which the PCBs are made involves the chlorination of biphenyl with anhydrous chlorine in the presence of a catalyst which may be either iron filings or ferric chloride. The crude product is generally purified to remove color, traces of hydrogen chloride, and the catalyst by treatment with alkali and subsequent distillation. The resulting product is then a more or less complex mixture of the chlorobiphenyls, the precise composition depending on the conditions under which chlorination was carried out. The approximate composition of selected Aroclors is given in Table 1.2-1.

By way of explanation, the products made by Monsanto under the tradename Aroclor are designated as to the starting material, with biphenyl represented by the 12 prefix, and with the approximate chlorine percentage by the second set of digits; i.e., Aroclor 1248 is a chlorinated biphenyl containing approximately 48 percent chlorine.

From the data presented in Table 1.1-1 and 1.2-1, it might be inferred that all of the isomers of the individual chlorobiphenyls are to be found in each of the commercial mixtures. To illustrate the actual situation, Aroclor 1248, which is made up primarily of the di-, tri-, tetra-, penta- and hexa- chlorobiphenyls, could be expected to contain something of the order of 140-150 separate isomers. In point of fact, there are less than 50 identifiable peaks observed in the high resolution gas chromatogram of typical specimens of Aroclor 1248 as is illustrated in Table 1.2-2.

The observations relative to the high resolution studies of the commercial Aroclor mixtures have been summarized by Hutzinger, et al (ibid), in the form of Figure 1.2-1 which indicates the structural units of which the significant isomers are constructed.

Table 1.1-1
Empirical Formulation, Molecular Weights
and Chlorine Percentage in PCBs

Empirical formula chlorobiphenyls	Molecular weight*	Percent chlorine*	No. of isomers
$C_{12}H_{10}$	154	0	1
$C_{12}H_9Cl$	188	18.6	3
$C_{12}H_8Cl_2$	222	31.5	12
$C_{12}H_7Cl_3$	256	41.0	24
$C_{12}H_6Cl_4$	290	48.3	42
$C_{12}H_5Cl_5$	324	54.0	46
$C_{12}H_4Cl_6$	358	58.7	42
$C_{12}H_3Cl_7$	392	62.5	24
$C_{12}H_2Cl_8$	426	65.7	12
$C_{12}HCl_9$	460	68.5	3
$C_{12}Cl_{10}$	494	79.9	1

*Based on Cl^{35}

Table 1.2-1

Approximate Molecular Composition of Selected Aroclors

Chlorobiphenyl	Aroclor Type or Grade					
	1221	1242	1248	1254	1260	1016
	(percent composition)					
$C_{12}H_{10}$	11	<0.1		<0.1		<0.1
$C_{12}H_9Cl$	51	1		<0.1		1
$C_{12}H_8Cl_2$	32	16	2	0.5		20
$C_{12}H_7Cl_3$	4	49	18	1		57
$C_{12}H_6Cl_4$	2	25	40	21		21
$C_{12}H_5Cl_5$	0.5	8	36	48	12	1
$C_{12}H_4Cl_6$	ND	1	4	23	38	<0.1
$C_{12}H_3Cl_7$	ND	<0.1		6	41	ND
$C_{12}H_2Cl_8$	ND	ND		ND	8	ND
$C_{12}H_1Cl_9$	ND	ND		ND	1	ND
$C_{12}Cl_{10}$	ND	ND		ND		ND

Table 1.2-2

High Resolution Gas Chromatography of Aroclor 1248

Peak number*	No. of Cl	% In Aroclor 1248	% In fatty tissue
1			
2			
3			
4	2	0.4	
5	3	1.0	0.9
6	2	3.2	1.4
7	3	11.2	0.9
8	3	3.2	2.4
9	3	3.1	0.5
10	3	2.0	0.2
11/12	3,4	1.4	4.8
13	3,4	1.4	0.8
14	3,4	0.8	0
15	3	8.5	1.6
16	3	9.7	1.6
17	3	2.1	0.8
18	3,4	7.4	0.5
19	3,4	7.4	-
20	3,4	6.0	7.0
21	3,4	4.5	4.1
22	4	3.1	0.3
23	4	2.6	0.4
24	3,4,5	0.8	-
25	4,5	1.2	1.0
26	4,5	1.0	-
27	4	0.2	-
28	4	5.0	5.3
29	4	3.3	2.0
30	4	2.0	0.4
31	4	2.1	0.5
32	4,5	1.0	2.9
33	4,5	0.5	29.0
34	4,5	0.5	1.4
35	4,5	0.8	-
36	5	1.0	1.7
37	5	0.4	1.4
38	6	<0.1	0.1
39	4	<0.1	0.1
40	6	0.2	11.0
41/42	5	0.3	1.1
43	5,6	0.2	8.0
44	6	<0.1	5.3
45	6	0.2	0.9
46	6,7	(0.7)	(1.1)

Figure 1.2-1

Moieties from Which Principal Chlorobiphenyl Isomers are Formed

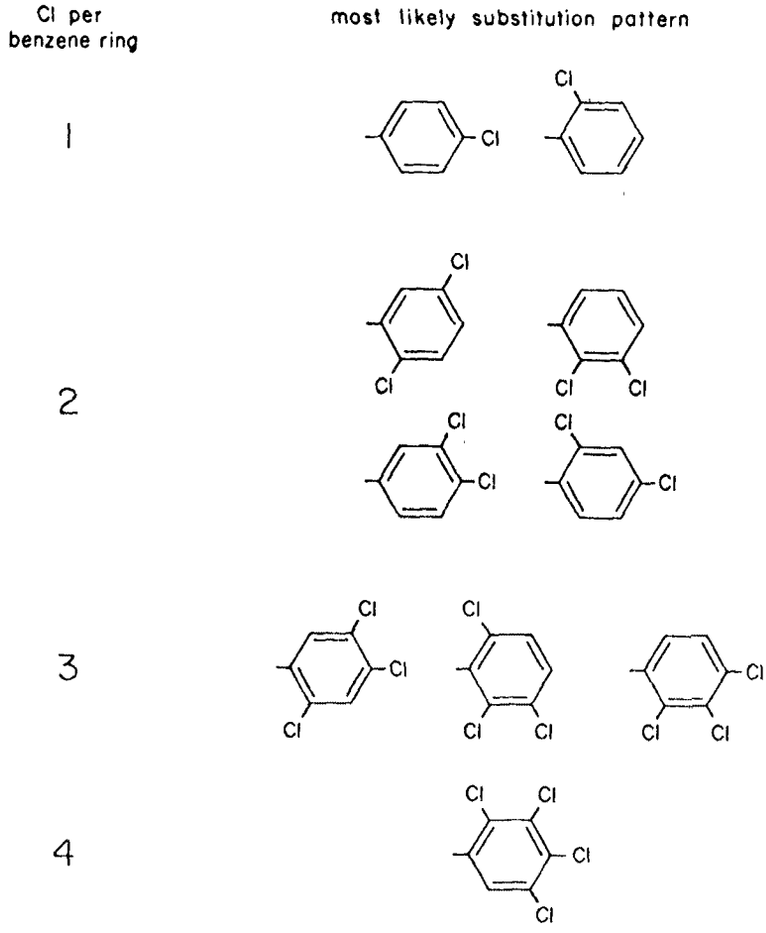

The most common substitution patterns for the chlorobiphenyls found in PCB preparations. Only one phenyl-ring is shown. The most abundant tetrachlorobiphenyls, for example, are those from the dichlorophenyl-moieties shown. One di- and one trichlorophenyl- would give most abundant penta-chlorobiphenyls, etc.

Several comments are necessary at this point: The importance of such detailed determination and identification of the isomers characteristic of the commercial PCBs lies in the observations, to be discussed below, that bio-accumulated chlorobiphenyls show what appear to be significant differences in the distributions of the individual isomers from the source materials. The most probable explanation for these observations seem to be that at least some of the chlorobiphenyls are metabolized principally to hydro-chlorobiphenyls. Only after very complete isomeric spectra are available can such effects be properly studied.

Secondly, the detailed study of the PCBs has shown that there are no major compounds in these mixtures aside from the chlorobiphenyls. On the other hand, products formed by the addition (rather than by substitution) of chlorine to the biphenyl molecule in laboratory studies, yield significant concentrations of partially saturated structures. These structures are apparently either not formed under the conditions of chlorination that prevail during the industrial processing or alternatively are destroyed during the purification steps of the process. In contrast to the Aroclors, some of the foreign products have shown traces of polychlorinated naphthalenes and polychlorodibenzofurans; a fact that may have considerable toxicological significance in view of the rather more toxic nature of these latter products. However, recent information published by FDA indicates that impurities of chlorodibenzofurans have been also detected in Aroclors.

1.3 Physical Properties of the PCB Aroclors

The relevant physical properties of the Aroclor mixtures naturally separate into two groups; those properties that have led to the widespread industrial use of these materials, and those properties that result in the introduction of these materials into the environment with what appears to be considerable potential danger.

1.3.1 Physical Properties of Industrial and Technical Interest

The most useful compilation of the physical properties of the various Aroclors that has so far appeared in the literature is that given by Hutzinger, et al (ibid), a portion of which is herein reproduced (with minor changes) as Table 1.3.1-1.

NR - not reported
* - same chlorine content as deca chlorobiphenyl
** - polychlorinated terphenyls

Table 1.3.1-1

Chemical and Physical Properties of Representative Aroclors

Property	Aroclor 1221	Aroclor 1232	Aroclor 1016	Aroclor 1242	Aroclor 1248	Aroclor 1254	Aroclor 1260	Aroclor 1262	Aroclor 1268	Aroclor 1270*	Aroclor 5442	Aroclor 5460**
Appearance	Clear, mobile oil	Clear, mobile oil	Clear, mobile oil	Clear, mobile oil	Clear, mobile oil	Light-yellow viscous liquid	Light-yellow soft, sticky resin	Light-yellow sticky viscous resin	White to off-white powder	White crystalline powder	Yellow, transparent sticky resin	Clear yellow-to-amber brittle resin
Color, maximum	100 APHA	100 APHA		100 APHA	100 APHA	100 APHA	150 APHA	150 APHA	1.5 NPA (molten)			
Chlorine, percent	20.5-21.5	31.4-32.5	~41	42	48	54	60	61.5-62.5	68	71	42	60
Acidity, mg KOH/g maximum	0.014	0.014		0.015	0.010	0.010	0.014	0.014	0.05			
Moisture, ppm, maximum	-	-		50	50	50	50	-	-			
Ave. coefficient of expansion, cc/cc/°C	0.00071 (15°-40°C)	0.00073 (25°-100°C)		0.00068 (25°-65°C)	0.00070 (25°-65°C)	0.00066 (25°-65°C)	0.00067 (20°-100°C)	0.00064 (25°-65°C)	0.00067 (20°-100°C)			
Specific gravity	1.182-1.192 (25°/15.5°C)	1.270-1.280 (25°/15.5°C)	1.362-1.372 (25°/15.5°C)	1.381-1.392 (25°/15.5°C)	1.405-1.415 (65°/15.5°C)	1.495-1.505 (65°/15.5°C)	1.555-1.566 (90°/15.5°C)	1.572-1.583 (90°/15.5°C)	1.804-1.811 (25°/25°C)	1.944-1.960 (25°/25°C)	1.470 (25°/25°)	1.670 (25°/25°)
Density, lb/gal, 25°C	9.85	10.55	11.40	11.50	12.04	12.82	13.50	13.72	15.09	16.30	12.25	13.90
Distillation range, °C, corrected (ASTM D-20, modified)	275-320	290-325	323-356	325-366	340-375	365-390	385-420	390-425	435-450	450-460	215-300	280-335
Evaporation loss, %, 100°C, 6 hr (ASTM D-6, mod.)	1.0-1.5	1.0-1.5		0-0.4	0-0.3	0-0.2	0-0.1	0-0.1	0-0.06			
163°C, 5 hr				3.0-3.6	3.0-4.0	1.1-1.3	0.5-0.8	0.5-0.6	0.1-0.2			
Flash point °C (Cleveland Open Cup)	141-150	152-154	170	176-180	193-196	none to boiling point	none to boiling point	none to boiling point	none to boiling point	none	247	none
°F	286-302	305-310		348-356	379-384							
Fire point °C (Cleveland Open Cup)	176	238	none to boiling point	none to boiling point	none to boiling point	none to boiling point	none to boiling point	none to boiling point	none to boiling point	none	>350	none
°F	349	460										
Pour point °C (ASTM E-97)	1 (crystals)	-35.5		-19	-7	10	31	35-38	-		46	—
°F	34 (crystals)	-32		2	19.4	50	88	99				
Softening point °C (ASTM E-28) °F	-	-		-	-	-	-	-	150-170 302-338 (hold point)	249-300	46-52	98-105.5
Refractive index, n D-20 20°C	1.617-1.618	1.620-1.622	1.622-1.624 (@ 25°C)	1.627-1.629	1.630-1.631	1.629-1.641	1.647-1.649	1.6501-1.6517	-			1.660-1.665
Viscosity, sec Saybolt Universal (ASTM D-88)												
100°F (37.8°C)	39-41	44-51	71-81	82-92	185-240	1800-2500		600-850 (160°F: 71°C) 86-100	-			
130°F (54.5°C)	35-37	39-41	NR	49-56	73-80	260-340	1200-4500					
210°F (98.9°C)	30-31	31-32	NR	34-35	36-37	44-48	72-78					
Average no. of Cl/mol	1.15	2.04	NR	3.10	3.30	4.96	6.30	6.80	8.70	NR	NR	NR

In addition to the chemical stability and resistance to combustion illustrated in Table 1.3.1-1, the electrical properties of the PCB Aroclors are of extreme significance in the utilization of these materials. A compilation of the relevant data is presented as Table 1.3.1-2, which illustrates the nature of the problem that is encountered when one undertakes a search for a suitable substitute for these compounds in such segments of the electrical industry as the manufacture of capacitors. Specifically, the dielectric constants for most dielectric liquids lie in the range up to perhaps half of that of the polychlorinated biphenyls.

1.3.2 Physical Properties of Environmental Interest

The essentially world-wide distribution of the chlorinated hydrocarbons such as the PCBs suggest that a major route by which such compounds are transported is through the atmosphere either in the form of vapor or perhaps sorbed onto dust particles. In addition, it is observed that there is a widespread accumulation of these compounds within the biota ranging from the smallest on up the food chain until truly enormous loads are found in the highest members of the chain. Since this bioaccumulation also includes the aquatic biota, the possibility of considerable transport via the solubility of these compounds in water must also be taken into account. Table 1.3.2-1 lists some of the vapor pressure and solubility data for several of the Aroclors (D. MacKay and A. W. Wolkoff, Env. Sci. and Tech., 7, 611 ff (1973)).

The analysis of co-evaporation (MacKay, ibid) of dilute solutions of the Aroclors by equilibrium thermodynamics suggests that, because of the very high activity coefficients of the chlorobiphenyls in water, the potential for evaporation is quite high enough that this mechanism is a major portal by which such compounds enter the atmosphere. The fourth column of Table 1.3.2-1 indicates the theoretical time for a fifty percent reduction in the concentration of the Aroclor from a saturated water solution (pure water plus PCBs), assuming the water depth to be 1 meter thick. Clearly, the results of this analysis need to be experimentally verified.

Table 1-3.1-2
Electrical Properties of Some Aroclors

Aroclor	Dielectric constant at 1000 cycles[a] 25°C	100°C	Volume resistivity,[b] 8 cm at 100°C 500 V, de	Dielectric strength,[c] kV	Power factor,[a] 100°C, 1000 cycles, %
1232	5.7	4.6			
1242	5.8	4.9	above 500 x 10^9	>35	<0.1
1248	5.6	4.6	above 500 x 10^9	>35	<0.1
1254	5.0	4.3	above 500 x 10^9	>35	<0.1
1260	4.3	3.7	above 500 x 10^9	>35	<0.1
1268	2.5				
5442*	3.0	4.9	above 500 x 10^9	--	--
5460*	2.5	3.7	---	--	--

[a]ASTM D-150-47T

[b]ASTM D-257-46

[c]ASTM D-149-44

*Polychlorinated terphenyls

Table 1.3.2-1

Solubility, Vapor Presure and Halflife for
Vaporization from Water of Selected Aroclors at 25°C

PCB Type	Solubility (mg/l)	Vapor Pressure (mm Hg)	Theoretical halflife for vaporization from 1 m. water column
Aroclor 1242	0.24	4.06×10^{-4}	5.96 hr.
Aroclor 1248	5.4×10^{-2}	4.94×10^{-4}	58.3 min.
Aroclor 1254	1.2×10^{-2}	7.71×10^{-5}	1.2 min.
Aroclor 1260	2.7×10^{-3}	4.05×10^{-5}	28.8 min.

As pointed out above, not only is each of the Aroclors a mixture of several chlorobiphenyls, but there are a number of isomers present for each of the chlorobiphenyls. Thus, the solubility of an Aroclor, or the vapor pressure of an Aroclor, represents an average over the various species that make up the mixture. To illustrate the effect of the structural complexity, Table 1.3.2-2 (Hutzinger, ibid) details the measured vaporization rates of the several Aroclors. On the other hand, the changes in the mixture corresponding to Aroclor 1254 on extended heating are displayed in Table 1.3.2-3 (Hutzinger, ibid).

The possible implications of these data lie in the fact that much of the Aroclor that is found in typical environmental samples seems to demonstrate lesser amounts of the lower chlorine number chlorobiphenyls than is characteristic of freshly manufactured samples. This observation has frequently been attributed to possible metabolism of the more lightly chlorinated species coupled with enhanced fixation of the higher chlorinated species.

A partial listing of the measured solubility in water of identified authentic chlorobiphenyls is shown in Table 1.3.2-4 (Hutzinger, ibid) and the effect of the solubility differences of the individual chlorobiphenyls on the constitution of Aroclor 1254 solutions is illustrated in Table 1.3.2-5 (Hutzinger, ibid).

A factor that is most probably of considerable importance in the admission of such compounds as the PCBs into the environment is a measure of the partition coefficients between such interface systems as soil-air; soil-water; lipids-water; and, more generally, water-solid particles. At the present time there seems to be very little actual data available in direct form, although much should be possible to infer from the effects of various combinations of stationary phase and support in gas chromatography on the retention index. An interesting and probably significant point of datum has been presented by D. R. Branson of the Dow Chemical Co., who reports that the distribution of 2,2',5 trichlorobiphenyl between sludge-water-air was 92%-3%-5%, respectively.

Table 1.3.2-2

Vaporization Rates of Aroclors

Aroclor (Surface area: 12.28 cm^2)	Wt. loss (g)	Exposure at 100°C (hr)	Vaporization rate ($g/cm^2/hr$)
1221	0.5125	24	0.00174
1232	0.2572	24	0.000874
1242	0.0995	24	0.000338
1248	0.0448	24	0.000152
1254	0.0156	24	0.000053
1262	0.0039	24	0.000013
1260	0.0026	24	0.000009
1270 (Deca)	0.0015	24	0.000005

Table 1.3.2-3

Percent Loss in Area of Seven Chromatogram Peaks of Aroclor After Heating

	% Peak Remaining After Heating		
	with water		without water
Aroclor 1254 peak	25 min	60 min	10 min
1	34	17	13
2	59	26	15
3	78	27	20
4	60	46	20
5	86	49	27
6	100	85	28
7	100	67	16

Table 1.3.2-4

Solubility of Chlorobiphenyls in Water

Compound	Solubility mg/l (ppm)
Monochlorobiphenyls	
2-	5.9
3-	3.5
4-	1.19
Dichlorobiphenyls	
2,4-	1.40
2,2'-	1.50
2,4'-	1.88
4,4'-	0.08
Trichlorobiphenyls	
2,4,4'-	0.085
2',3,4-	0.078
Tetrachlorobiphenyls	
2,2',5,5'-	0.046
2,2',3,3'-	0.034
2,2',3,5'-	0.170
2,2',4,4'-	0.068
2,3',4,4'-	0.058
2,3',4',5-	0.041
3,3',4,4'-	0.175
Pentachlorobiphenyls	
2,2',3,4,5'-	0.022
2,2',4,5,5'-	0.031
Hexachlorobiphenyl	
2,2',4,4',5,5'-	0.0088
Octachlorobiphenyl	
2,2',3,3',4,4',5,5'-	0.0070
Decachlorobiphenyl	0.015
4,4'-Dichlorobiphenyl	
+Tween 80 0.1%	5.9
+Tween 80 1%	>10.0
+Humic acid extract	0.07

Table 1.3.2-5

Relative Peak Heights (Peak 5 = 100) in Saturated Aqueous Solutions of Aroclor 1254

Peak No.	Saturated aqueous solution (26°C)	Saturated aqueous solution (4°C)	Aroclor 1254 standard
1	172	144	35
2	91	72	16
3	47	41	30
4	14	9	1
5	100	100	100
6	33	28	23
7	57	59	55
8	5	5	10
9	21	24	25
10	8	13	31
11	4	4	6
12	11	24	50
13	6	10	11

1.4 Chemical Properties of the Chlorobiphenyls

Considerable detail on the most important chemical reactions that are known to occur with the chlorobiphenyls is presented in Chapter 5 of the treatise on "The Chemistry of the PCB" by Hutzinger, et al. Suffice it to say here that oxidation and hydrolysis can be carried out, but only under conditions which are considerably more rigorous than would be obtained in industrial applications. This relative stability is, of course, one of the most attractive features of these compounds in technological practice.

The class of reactions to which the chlorobiphenyls are susceptible and which is of most interest in terms of their possible toxicological significance are those which result in cyclization. Of particular interest in this context is 2,2' dichlorobiphenyl, which on cyclization yields the compound dichlorodibenzofuran. The toxicological data on these two compounds indicates the nature of this change: the LD_o for oral doses to rats is of the order of 250 mg/kg for the dibenzofuran whereas the corresponding toxicity for the chlorobiphenyl is in excess of 4000 mg/kg. (Data from the "Toxic Substances List", HEW, 1973).

The close proximity of the 2 and 2' substituents on the biphenyl molecule facilitates intermolecular cyclization reactions under a variety of conditions. Of special interest is the observation that alkali fusion of 2-chloro-2'-hydroxybiphenyl and the dehydration of 2,2'-dihydroxychlorobiphenyl yield the corresponding chlorodibenzofurans; hydroxylation of the chlorobiphenyls is the common initial step in the metabolism of these compounds. The immediate biological significance of this is unknown at this time since the chlorodibenzofurans have not been isolated from animal experiments.

1.5 Photochemical Reactions Involving the PCBs

A great deal of effort has been directed to the study of the effects of ultraviolet (UV) radiation on the chlorobiphenyls since photodestruction is believed to be a possible major mechanism for the environmental decay of chlorohydrocarbon pesticides such as DDT. There has been much speculation as to the role that UV photodisintegration might play in terms of the chlorinated biphenyls. The earlier work was carried out using mercury vapor UV sources with the result

that, because of the significantly harder radiation (mercury source 250 nm, solar radiation at surface of the earth with an effective cutoff at 290 nm), cross section and reaction paths are difficult to extrapolate to environmental situations. In more recent times, such irradiation studies have been carried out using General Electric "Black Light" sources which much more nearly approximate the spectral distribution of solar radiation.

A number of types of effects have been observed including partial dechlorination and even, in some cases, the formation of very viscous semi-solids that apparently arise from complex polymerizations. Again, the extension of the experimental results to environmental conditions is somewhat limited in value since the majority of the irradiation studies have been carried out in solvents other than water. The very low solubility of even the least chlorinated chlorobiphenyls in water makes the experimental study of aqueous solutions especially difficult, particularly when the information of concern is the quantitative evaluation of the reaction products that are formed. It must be said, at this time, that the probability of UV disassociation being a major source for the environmental decay of the chlorobiphenyls seems to be significantly less than that for the chlorinated hydrocarbon pesticides.

Since it is assumed that a major portion of the chlorinated biphenyls are transported and distributed throughout the world through the medium of adsorption on dust particles or as a vapor, it follows that studies of the stability of thin sorbed films or of vapors of the chlorinated biphenyls against long term UV irradiation are of importance. The earlier attempts to discover the presence of reaction products resulting from long term exposure of selected chlorobiphenyls to solar radiation were subject to the differential evaporation of the less chlorinated species; this result seriously biased the observations. The recent experiments that have been conducted within quartz containers seem to obviate evaporation problems and, further, seem to indicate that the mono- and dichlorobiphenyls are essentially completely destroyed when exposed to hard UV for times of the order of weeks or months. Problems of detection sensitivity continue to plague attempts to elucidate the detailed mechanisms and pathways.

Studies of thin films of chlorobiphenyls sorbed onto appropriate surfaces have also been carried out within a quartz enclosure. To date, the major objection to such experiments, in terms of extrapolation to environmental conditions, seems to be that the concentration, or rather the absolute density of the surface layer, is sufficiently high that the activated species remain in contact for sufficiently long times as to allow the formation of products that might well be very rare events in corresponding environmental concentrations.

At this time there appears to be significant research being directed to the determination of the stability of chlorobiphenyls against ultraviolet radiation and that it is to be expected that the situation which obtains in typical environmental conditions will be greatly illuminated in the near future.

1.6 Metabolic Chemistry of the Chlorobiphenyls

The very combination of physical and chemical properties that have made the chlorobiphenyls and their technical mixtures of such wide technical interest also result in these compounds being of significance as environmental pollutants, especially in terms of their impact on the biota. The very low chemical activity, coupled with high lipid-water partition coefficients, apparently contribute to the bioaccumulation whereby the chlorobiphenyls, pecially the more highly chlorinated species, tend to become fixed within the body fats and particularly in higher members of the food chain. There is evidence that this fixed load of refractory chlorinated organic materials, or the circulating levels of the same compounds that must accompany such fixed loads, represents a serious hazard to the bearer or progeny. The toxic consequences of body burdens of chlorobiphenyls is more fully discussed in the section of this report concerned with toxicology of the chlorobiphenyls.

The mechanisms by which an organism can deal with ingested refractory compounds are naturally separated into physical and chemical processes. The physical processes are primarily associated with the requirements of free energy across the boundary between differing phases such as a water-lipid boundary, or a cell wall, etc. Since there does not exist a significant body of partition coefficient data for various combinations of interfaces, little of a quantitative nature can be stated as to the biological significance of such physical processes.

On the other hand, as is pointed out in Section 2.4, hydroxylation is a rather easily accomplished process for at least the less chlorinated chlorobiphenyls. Thus, it might be assumed that one should observe the hydroxylated chlorobiphenyls as intermediate metabolic products in a variety of organisms. Experimental data is available to indicate that such hydroxylation processes are indeed exhibited by a wide variety of organisms. The principle species related differences seem to be in the rate at which such processes are found to occur — very rapidly in rodents and very slowly in fish. In addition, once the target chlorobiphenyl has been hydroxylated to a more or less degree, there appear to be available a wide variety of species-specific addition processes which could make use of the hydroxylated molecule. Interestingly, there is to date no evidence of biologically or metabolically induced cyclization; it thus appears likely that the chlorodibenzofurans are not biologically formed.

The salient observations to date on the metabolism of chlorobiphenyls might best be summarized as follows:

a. When the challenge to the animal is a technical mixture of chlorobiphenyls, there is a preferential storage of the more highly chlorinated species, with the result that the homologue spectrum of stored PCBs often represents a more heavily chlorinated mixture than the original test mixture.

b. There is conflicting and often species-dependent data as to the mechanism by which the less chlorinated species are differentiated; whether the processes involve metabolism, physical partitioning, or some combination of such processes has not been settled.

c. Conflicting and confusing evidence exists indicating marked differences in accumulation and differentiation between specific isomers especially at the middle levels of chlorination. These differences also seem to be species-dependent in a number of cases.

d. There is significant evidence that PCB metabolism proceeds through an intermediate step of hydroxylation (often this appears to be the terminal step whereby the increased aqueous solubility of the hydroxylated species accomplishes the end of its removal).

e. There are several observations indicating that isomerization can be accomplished during metabolic reactions. In this context, the results of Bagley and Cromartie (Bagley, G.E. and E. Cromartie, J. Chrom. 75, 219-226, (1973)), with the elimination of Aroclor 1254 in the Bobwhite, are most pertinent.

In conclusion, there has been much work directed to the study of the mechanisms whereby living organisms are able to eliminate chlorinated biphenyls from their system. In spite of this effort and because of the inherent complexity of this subject, the nature of these mechanisms remains a mystery.

SECTION V

INDUSTRIAL CHARACTERIZATIONS

1.0 INTRODUCTION

This section discusses polychlorinated biphenyls (PCBs) production and each PCBs user (capacitor, transformer, investment casting, paper recycling and miscellaneous) manufacturing process. When known, for each operation the following information is given:

- Name and the location of companies in each category;
- A description of the processes at the facilities studied and pertinent flow diagrams, where appropriate;
- Raw waste load data per ton of PCB used and sources of these wastes;
- Water usage data in terms of gallons per day;
- Treatment and housekeeping measures practiced at the facilities and on-going PCB containment programs;
- Plant waste effluents found and their composition.

2.0 MANUFACTURING PROCESS - POLYCHLORINATED BIPHENYLS (PCBs)

2.1 Process Description

Monsanto, the sole domestic manufacturer of PCBs, manufactures this chemical in their Sauget, Illinois plant. The basic raw material is biphenyl which is manufactured from pure benzene in another Monsanto plant. The PCB manufacturing operation is conducted in two steps. First, biphenyl is chlorinated with anhydrous chlorine in the presence of ferric chloride to produce crude PCBs and then the crude PCBs are distilled to obtain the finished product. A schematic flow diagram of this process is given in Figure 2.1-1A and B.

FIGURE 2.1-1A. PREPARATION OF CRUDE CHLORINATED BIPHENYLS-MONSANTO KRUMMRICH PLANT

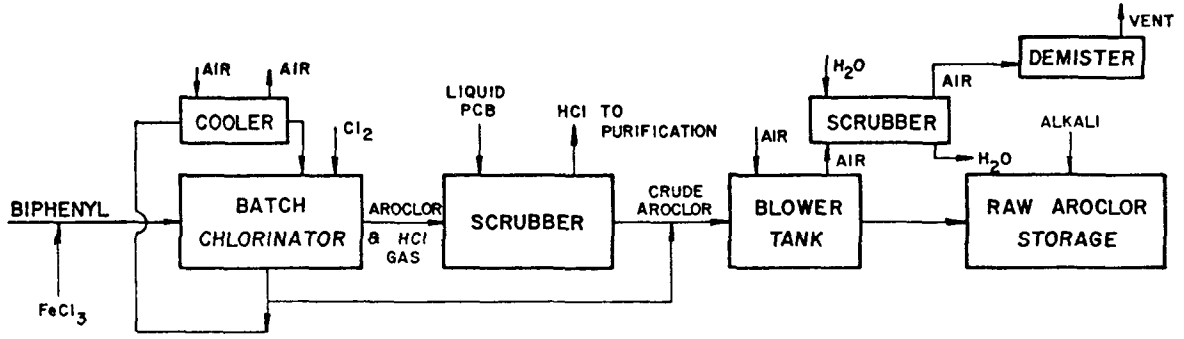

FIGURE 2.1-1B. DISTILLATION OF CRUDE PRODUCTS-MONSANTO KRUMMRICH PLANT

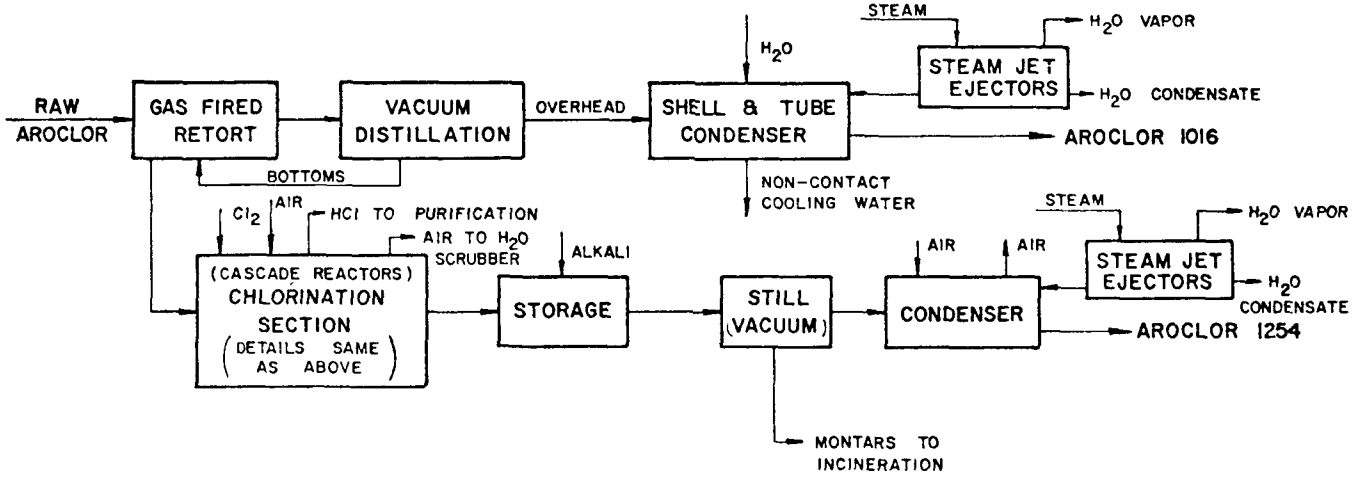

The reaction section consists of 6 reactors (3 batch and 3 cascade). Currently, Monsanto manufactures four different types of Aroclors (1242, 1016, 1254 and 1221). For the manufacture of any given product, the chlorinator is charged with proper quantities of biphenyl and catalyst and heated above the melting point of biphenyl. The flow of vaporized chlorine is then started and the charge is circulated with a pump. Throughout the chlorination, the temperature is kept above the melting point of the mixture, but below 150°C to avoid excessive sublimation and plugging of the line discharging the hydrogen chlorine produced by the chlorination. The reaction pressure is maintained near atmospheric. The degree of chlorination is principally determined by the time of contact with anhydrous chlorine. The contact time varies from 12 to 36 hours for the manufacture of different Aroclor types. The degree of chlorination is measured by the specific gravity of the mixture or the ball and ring softening point when the product is viscous.

The vapors from the chlorinator (HCl containing PCBs) are scrubbed with liquid Aroclor and the gaseous HCl is sent to another plant at the Sauget complex for purification. The crude product is held at an elevated temperature and blown with dry air for several hours, after which it is sent to the raw Aroclor storage tank where a few tenths of 1 percent of alkali are stirred with the material to react with any remaining hydrogen chloride or ferric chloride. The air from the blower tank is scrubbed with water and vented to the atmosphere through a demister.

The raw Aroclor is subsequently batch distilled under reduced pressure to remove the color, and the traces of hydrogen chloride and ferric chloride. The methods of purification are different for the different types of end products. Raw Aroclor 1254, 1242 and 1221, each are distilled in stills under reduced pressure, achieved via steam jet ejectors; the condensate from the still is the finished product while the bottoms are the Montars which are drummed and sent to incineration.

The distillation section for the 1016 product consists of a gas fired retort and a vacuum distillation tower. The latter is used to allow the separation of the higher chlorinated, less biodegradable compounds from the relatively

lower chlorinated and more biodegradable ones. The raw Aroclor (42% chlorinated material) is fed into the reboiler. The vacuum in the tower is maintained at about 100 mm Hg by steam jet ejectors. The steam is partially condensed and the condensate is discharged into the plant discharge sump. The first cut from this tower is recycled back to the retort. At a preset overhead temperature the 1016 product is collected and sent to the product storage. The high boiling residue from the tower is sent to a subsequent chlorination cycle and the resulting raw Aroclor is distilled in a still. The overhead from this still is the finished product. The bottoms from this tower are the Montars. The spent ferric chloride catalyst, used in PCB manufacturing, is sent to incineration with Montar residues.

For special orders, in order to increase electrical resistivity, the Aroclors are stirred at an elevated temperature with a few tenths of 1% of well-dried fuller's earth and then filtered through paper.

All Aroclors are stored at 150°F. Steam coils are used on the storage tanks for heating these tanks.

2.2 Raw Wastes

The raw wastes from the manufacturing area consist of the liquor from the scrubber, the condensate from the steam jet ejectors, water used for showers and eye baths, miscellaneous floor wash downs, waste oil collected in drip pans and drums, and montars which are the bottom cut from their stills. The composition and the quantities of the individual waste stream are not monitored. All effluent streams generated in the manufacturing area are directed into the sumps in this area. The waste oil collected in the drip pans and the Montars are emptied into 55 gallon drums and sent to incineration.

The raw wastes generated in the incinerator consist of the venturi scrubber liquor and the water phase from the separator sump in the incinerator area. The composition of the combined stream is monitored. However, the composition of the individual streams is not known. Non-product PCB discharges are shown in Figure 2.2-1. It has been estimated that this plant generates

FIGURE 2.2-1. NON-PRODUCT PCB DISCHARGES AT MONSANTO'S KRUMMRICH PLANT

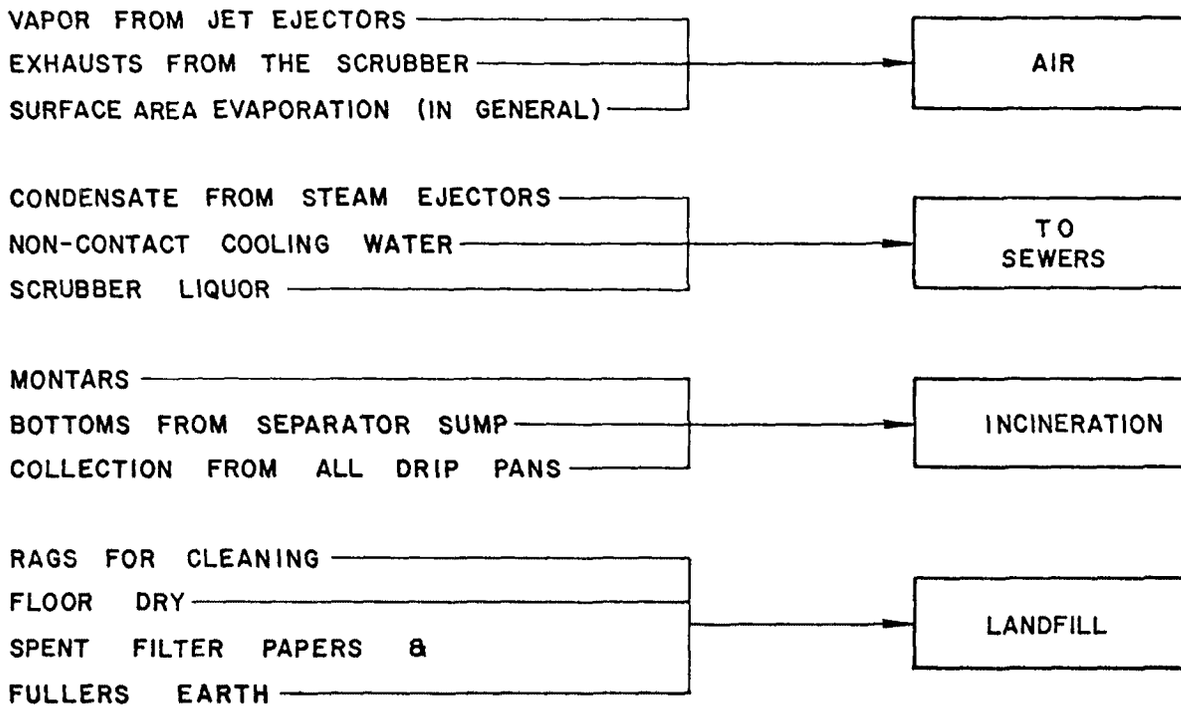

about 25 lbs of scrap oil and Montar per ton of PCB produced. Additionally, the quantities of material sent to landfill approximates to 5.4 lbs per ton of PCB produced. Further, Monsanto reports that the plant's PCB contribution to the air is under 1 lb/day.

2.3 Plant Water Usage

On the average, the PCB plant uses a maximum of 388,800 gallons of water and a maximum of 360,000 lbs of steam daily. Water is used for non-contact cooling purposes in shell and tube condensers, in a water scrubber, for floor washings, for showers and in eye baths. Steam is used in the steam jet ejectors and for steam tracing purposes. The plant uses municipal water and purchased steam.

The process water from this facility consists of the liquor from their scrubber and the steam condensates which are discharged in one of the two sumps in the manufacturing area.

Additionally, 273,600 gallons of water are used in the incinerator daily for quenching the hot gases from the fire box. The resulting weak muriatic acid in the quench pot is used in the venturi scrubber and in the packed tower.

The type and quantities of water used and discharged at this plant are summarized below:

Water Balance

- Manufacturing Plant

	Quantities, GPD	
	Used	Discharged
Process Water		
in water scrubber	14,400	14,400
misc. floor wash downs	7,200	7,200
condensate from steam jet ejectors	--	14,400

Water Balance (Con't)

. Manufacturing Plant

		Quantities, GPD	
		Used	Discharged
Non contact cooling water		360,000	360,000
showers, eye bath		7,200	7,200
condensate from steam tracers		--	28,800
	Total	388,800	432,000

. Incinerator

water used for hot gas quenching		273,600	273,600
water phase from the sump		--	14,400
	Total	273,600	288,000

2.4 Wastewater Treatment and Housekeeping

Monsanto reports significant environmental controls at their Krummrich, Sauget plant. Since 1969, they have invested more than 22 man-years of work and millions of dollars in this program. The in-house goals have reduced the PCB discharges into water to about three pounds per day.

A John Zink designed incinerator was erected at Sauget in 1970 to safely dispose of PCBs. A schematic flow diagram of this operation is given in Figure 2.4-1. Aroclor is steam atomized and fed into the fire box. Natural gas is used for combustion and the feed is incinerated at temperature above 2200°F at 5 percent excess oxygen with a retention time of 2-3 seconds. The gases are quenched with water and the exhausts from the quench pot are passed through a high-energy venturi scrubber, then through a packed column which is irrigated by the weak muriatic acid originating from the quench pot. Exhausts are then vented to atmosphere through a demister. These exhausts as well as the effluent from the incinerator section are monitored.

In the incineration area, drainage is directed to trenches and piping which flow into a 10,000 gallon underground concrete basin. The water

FIGURE 2.4-1. PROCESS FLOW DIAGRAM OF THE JOHN ZINK INCINERATOR AT MONSANTO'S KRUMMRICH PLANT

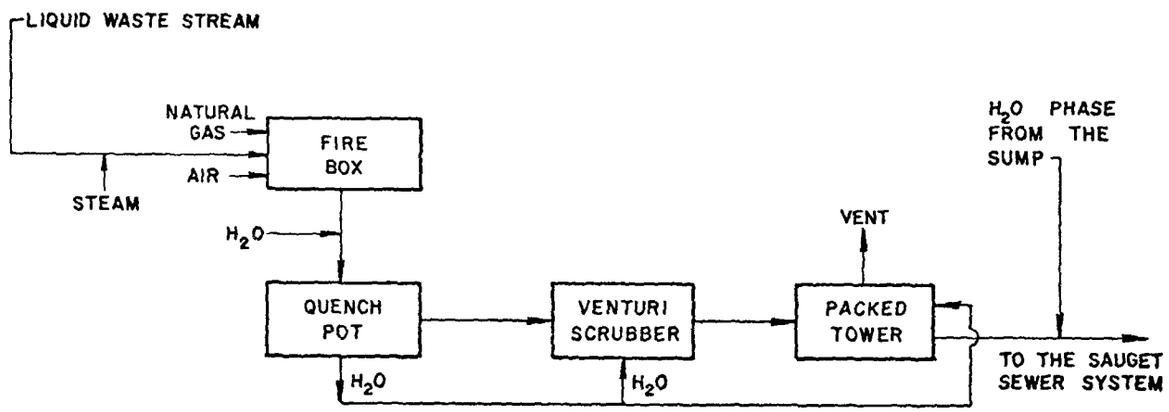

layer from this basin is pumped continuously, combined with the scrubber liquor, metered, monitored and discharged into the sanitary sewers of the Sauget complex and from there it is sent to the East St. Louis municipal sewers. The organic phase from the sump is periodically pumped into waste storage tanks for incineration.

The incineration unit has a rated design capacity of 10 million pounds per year. However, since the start of its operation this unit has achieved a service factor of about 0.60. Monsanto reports that this incinerator can achieve a maximum of 6 million pounds of capacity annually; the unit is plagued with various mechanical problems.

Monsanto uses their incinerator to process both their own wastes and as a service to other industries. The service charge for incineration is an average of 5¢ per lb of material, but the cost appears to be increasing.

The incinerator feed is brought into the plant either by truck in 55 gallon sealed drums, by tank trucks or by rail. The drums are opened, picked up by a fork lift and emptied into a concrete pit. The tank truck carrying the waste liquids enters the incinerator area and the liquid waste is then pumped from the truck into the pit. The material in this pit is periodically pumped via a vertical certrifugal pump into one of the four 20,000 gallon incinerator waste feed tanks.

The rail car is brought into a designated area close to the incinerator site. The material from the rail car is normally pumped into a long term, 500,000 gallon storage tank. The material from this tank is pumped into the incinerator feed tanks located on the incinerator pad when required.

Drainage is provided along the rail tracks. These drains empty into the 10,000 gallon sump located under the incinerator pad.

In the manufacturing area, Monsanto has taken a number of significant steps to prevent loss of PCBs to the environment. Drainage is directed to trenches and piping, and then to one of two concrete 3,000-gallon underground settling basins. This insures PCB containment in case of accidental spill or

equipment failure. Relief valve lines and atmospheric vents are routed through catch tanks, or are redirected to settling basins.

When small quantities of PCBs are collected in the settling basins of the manufacturing area they are later pumped into 55 gallon drums, and eventually incinerated. The overflow from these sumps is combined with the non-contact cooling water used at the plant, monitored and then discharged into the Sauget complex's sanitary sewer and from there to the East St. Louis municipal system.

PCBs are packed and shipped in galvanized-steel 55 gallon drums, or in railroad tank cars. All tank cars are top loaded. In the drum filling area spills are cleaned via rags or floor dry and these materials are drummed and sent to landfill located in the town of Sauget.

In the PCB truck or rail car loading area, drainage is directed into a small concrete pit. The material accumulated in this pit is periodically pumped into the basins located in the manufacturing area.

Nitrogen blanketing is provided on storage tanks to eliminate any "breathing" of the tanks and resultant PCB escape.

Mist eliminators have been installed in vapor lines to eliminate the possibility of PCBs leaving the manufacturing area through these lines.

Finally, underground sewers have been replaced with above-ground sewers, and repaired or combined with others, so that the effluent from the department can be monitored. In addition, this step will prevent any unknown buildup of PCBs in the sewer systems or any contamination of PCBs into other sewers.

A high housekeeping level is maintained in the plant itself. Housekeeping responsibilities which the operators have assumed are as follows:

- All pumps are checked for leakage on every shift. Drip pans that collect leaks are emptied into scrap PCB drums.

- All leaks are reported and documented so that corrections can be made and settling basins observed.
- "Floor Dry" is used to absorb any PCBs that have spilled or leaked. If it becomes necessary to flush PCBs to the settling basin, a minimum amount of water is used.
- Sampling drums and scrap PCB drums are quickly palletized, labelled and transferred to the incineration area.

2.4.1 Treatment Facility for the Effluent from Sauget Complex

The processing and incineration departments' aqueous effluent enters the plant sewer system, and this system discharges into the Sauget Village waste sewer system. The combined streams then flow to the village primary treatment plant. The village treatment plant is under expansion to a secondary chemical treatment plant, scheduled for 1976 completion.

Additionally, evaluations are being conducted to include the village plant discharge in a projected regional biological treatment plant.

2.5 Plant Effluents

This plant has no point source discharge from their operation. There is a single discharge from the manufacturing operation (the combined stream of process and non-contact cooling water) to the main sewer system of the Sauget complex and there is a second discharge from the incinerator area to the same sewer system. The composition of these streams as reported by Monsanto are as follows:

	Effluent from the Manufacturing Operation	Effluent from the Incineration area
flow rate, gpd	432,000	288,000
PCBs, ppm	0.75	0.15
PCBs, lbs/day	2.70	0.36

It has been reported that these effluents are clear liquids with essentially no suspended solids. The incinerator effluent may contain some amounts of chloride. However, no information is available on the chloride content.

3.0 PCB USER INDUSTRIES

3.1 Askarel Capacitor Manufacturing Industry

Presently 90-95 percent of all impregnated capacitors manufactured in the U.S. are of the PCB type. Two important types of capacitors are phase correctors on power lines and ballast capacitors for fluorescent lighting. Aroclor 1016 is the principal PCB used in this application; at some plants Aroclor 1242 and 1221 are also being used in limited quantities. The principal types of Aroclor impregnated capacitors and their applications are given below.

A. High Voltage Power

Generally AC capacitors are used to improve the power factor of a circuit. Power factor is the ratio of true power in watts to the apparent power as obtained by multiplying the current flowing to the load by the circuit voltage. The power factor correction can be made directly at the load or at utility substations. In the latter case high voltage units will be designed for 4,800 to 13,800 volt service. To the utility engineer the use of capacitors is purely a matter of economics. The main benefits that result from the use of capacitors are:

1. Reduction of losses associated with the delivery of electrical power to the point of use.
2. Reduction of the investment required in equipment for delivering electrical power to the point of use, which may be broken down into:
   a. Reduction of line current for the same kilowatt load.
   b. Reduction of the kva rating of equipment required to handle the same kilowatt load.

c. Reduction of the transmission line voltage drop for a given kilowatt load.

d. Control of delivered voltage if the capacitor kva is varied.

Electric utilities also use capacitor banks in series with distribution circuits to improve voltage regulation.

B. Low Voltage Power

Capacitors installed in industrial plants at the demand site (typically large motors and welders) are designed for 230 to 575-volt service. Capacitors installed near the loads are the most efficient way to supply the magnetizing current to produce the flux necessary for the operation of inductive devices. Rates for the sale of power are generally structured to encourage power factor correction at the site, eliminating the need for the electric utility to transmit both power-producing current and magnetizing current all the way from the generator to the plant site.

The same considerations apply to induction heating applications, the principal difference being that capacitors for this application are designed for operation at 960 to 9600 Hz.

C. Lighting

Capacitors improve the efficiency of lighting systems. A fluorescent or mercury vapor lamp can be ballasted without the use of a capacitor, but the power factor of the lighting system would then be in the range of 50 to 60%. For commercial or industrial lighting with either fluorescent or high intensity discharge lamps, the use of a capacitor in the circuit provides part of the lamp ballasting and brings system power factor into the range of 90 to 95%.

D. Air Conditioning

As in the lighting applications, the capacitor improves system efficiency. Air conditioners could be made to operate without capacitors, as do home refrigerators, but because of the higher capacity required for air conditioners,

the resultant line current would virtually eliminate home "plug-ins" and would still further overburden a seriously threatened national power network. Almost all air conditioner pump motors are of the split-winding type on which the capacitor provides phase differential for the so-called start winding, thus delivering good starting torque. The proper size capacitor permits high (90%) power factor after start-up.

E. Industrial Electronics

This market category is a catchall covering many varied applications, two important ones being motor run and power supply applications. Motor run applications are for pumps, fans, and farm feed equipment, and do not differ significantly from air conditioning applications. The power supply market uses capacitors principally to provide high power factor, but through careful design the capacitor can also provide wave shaping where desired.

3.1.1 Askarel Capacitor Manufacturing Plants

There are seventeen companies in the U.S. which manufacture askarel capacitors at nineteen plants. The name and the location of these plants are given in Table 3.1.1-1. Some plants manufacture industrial capacitors only and others manufacture power capacitors.

Ten major companies were contacted. Detailed information was obtained on six plants. Four plants were visited. The data herein represents approximately 50 percent of 1974 PCB usage in capacitor application. The PCB usage in this category was approximately 22,000,000 lbs. in 1974. The PCB usage in individual plants is considered by these companies to be confidential information. The range of PCB usage at these plants was 64,000 fold in 1974. Plant ages range from five to thirty-seven years.

Capacitors used in lighting and air conditioning applications contain 0.05 to 1.0 lbs. of Aroclor. The largest power capacitors contain about 77 lbs. of Aroclor. The most popular size contains 36 lbs. A sketch of a medium size industrial capacitor is shown in Figure 3.1.1-1. Capacitors are not rebuilt and returned to service after failure. They are disposed of and replaced by new units. G.E. reports that high voltage utility capacitors, low voltage

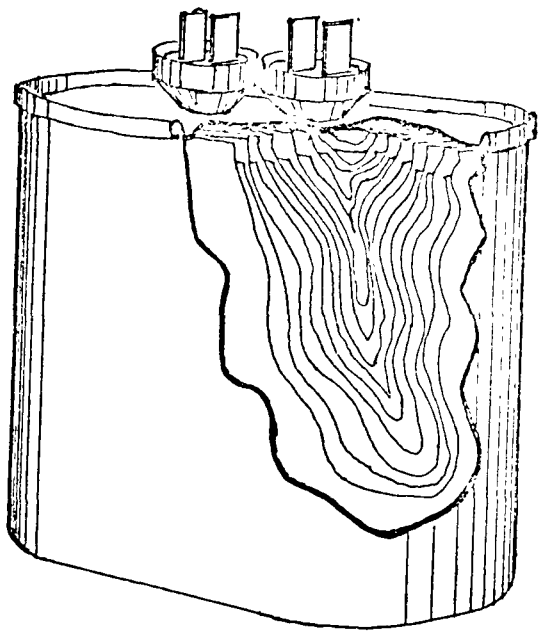

FIGURE 3.1.1-1. MEDIUM SIZE
INDUSTRIAL CAPACITOR

Table 3.1.1-1

U.S. Capacitor Manufacturing Industry Using PCBs

Company Name (In order of PCBs Usage)	Location of the Plant
General Electric Company	Hudson Falls, N.Y. Ft. Edward, N.Y.
Westinghouse Electric Corp.	Bloomington, Ind.
Aerovox	New Bedford, Mass.
Universal Manufacturing Corp.	Bridgeport, Conn. Totowa, N.J.
Cornell Dubilier	New Bedford, Mass.
P.R. Mallory & Co., Inc.	Waynesboro, Tenn.
Sangamo Electric Co.	Pickens, S.Carolina
Sprague Electric Co.	North Adams, Mass.
Electric Utility Co.	LaSalle, Ill.
Capacitor Specialists Inc.	Escondido, Calif.
JARD Corp.	Bennington, Vt.
York Electronics	Brooklyn, N.Y.
McGraw-Edison	Greenwood, S. Carolina
RF Interonics	Bayshore, L.I., N.Y.
Axel Electronic, Inc.	Jamaica, N.Y.
Tobe Deutschmann Labs.	Canton, Mass.
Cine-Chrome Lab, Inc.	Palo Alto, Calif.

power capacitors, and induction heating capacitors are manufactured at a rate of 200,000 per year, about 2 to 3% of which are replacements; the balance are for new installations. The current market for capacitors used in lighting applications is about 44,000,000 units annually of which 10% are estimated to be replacement ballasts. The current market for capacitors in air conditioning application is above 12,000,000 units annually, with 5% of these estimated to be for replacement usage. The market for capacitors in industrial electronics applications is estimated at 23,000,000 units per year with no estimate as to the relative size of the replacement market.

3.1.1.1 Askarel Handling

In most plants PCBs are shipped via tank car to a rail siding several miles from the plant. Individual plants provide a designated tank truck for the transfer of the PCBs from the rail yard to the manufacturing plant. To large plants, PCBs are brought via rail cars into the plant site.

In most plants PCBs are unloaded and transferred to the PCB storage tank without the benefits of any curbs or dikes. At a very few plants, the unloading operation of the PCBs from the tank car to the storage facility is confined and the receiving area is roofed and diked.

PCBs from the raw storage PCB tanks are filtered through fuller's earth and stored in finished product storage tanks. PCBs are next pumped from the storage tanks to the impregantion areas for use. Excess PCBs from these areas are recycled back to a designated tank and from there either filtered and reused or, if defective, are pumped into the scrap storage tank.

Spent fuller's earth employed at these plants is either drummed and stored at the plant site or is sent to a landfill.

3.1.1.2 Process Description

Most plants in this category manufacture either large power capacitors or small (including less than 2 lbs. of PCBs) industrial type units. The large capacitors are either flood filled or manifold filled. All small capacitors are flood filled either in a vacuum tank or in an automatic "carousel" arrangement where loading and unloading occurs at one station, and the capacitors in each cell are progressively dried, evacuated and filled.

A generalized schematic flow diagram for the manufacture of large capacitors and small industrial capacitors are given in Figures 3.1.1.2-1 and 3.1.1.2-2, respectively. The basic manufacturing operation at these plants can be divided into two major operations.

a) Non PCB related operations consist of the following steps:

- Fabrication of capacitor cans, covers and brackets from sheet aluminum or steel. Smaller plants, however, purchase capacitor casings, capacitor terminals, connectors and foil.
- Vapor degreasing or detergent washing of metal components. At some plants, ultrasonic cleaning is used to clean smaller components.
- Roll winding the capacitor paper or polypropylene film with aluminum foil.
- Complete assembly of capacitor components and sealing the covers. In some units fill holes are provided for PCB introduction; in others PCBs are introduced through bushings or a valve.
- Leak testing via mass spectrometer and pressure testing prior to vacuum drying.

b) PCB related operations

Three completely different impregnating techniques are employed by this industry.

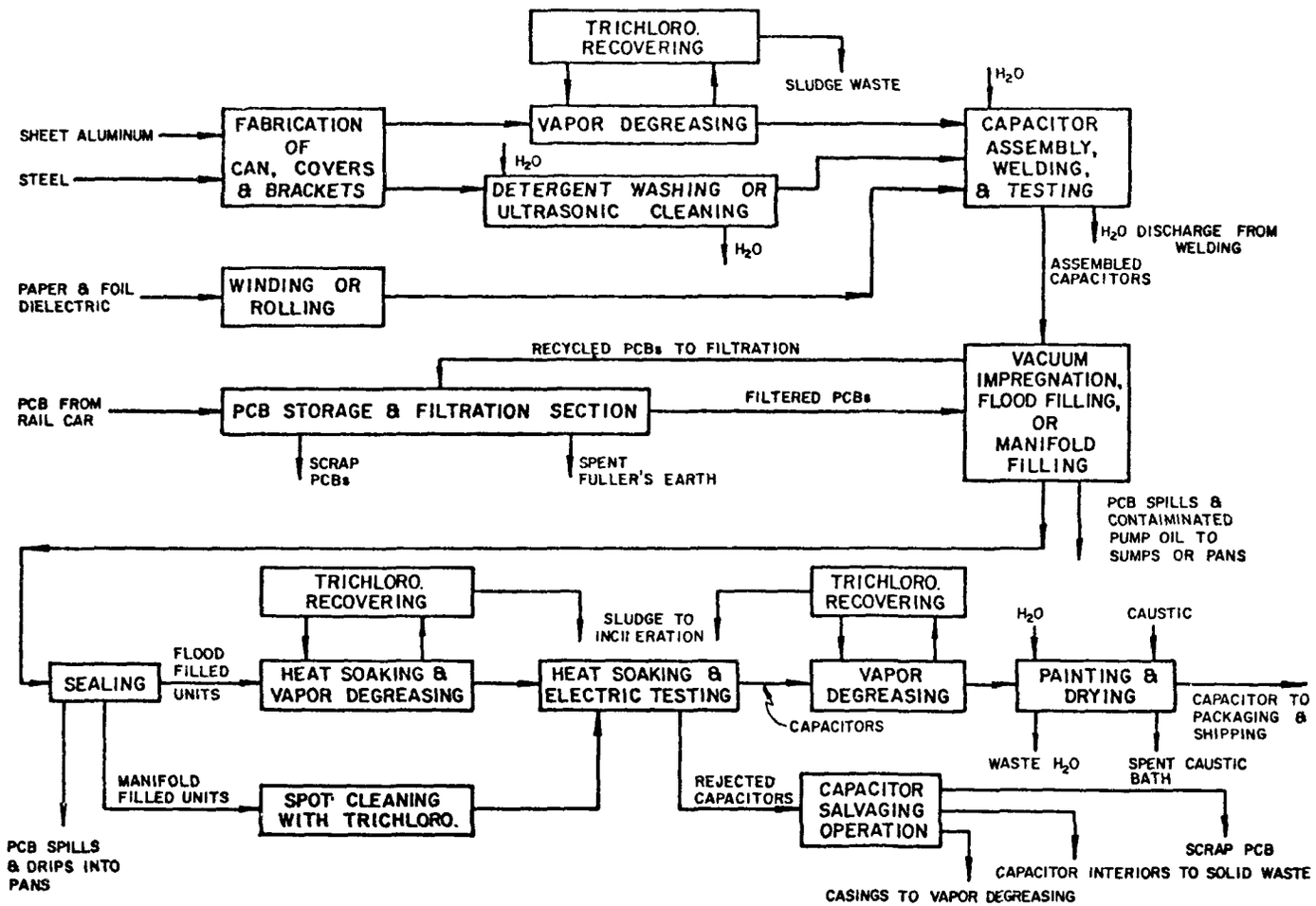

Figure 3.1.1.2-1

GENERALIZED FLOW DIAGRAM FOR THE MANUFACTURING OF LARGE CAPACITORS

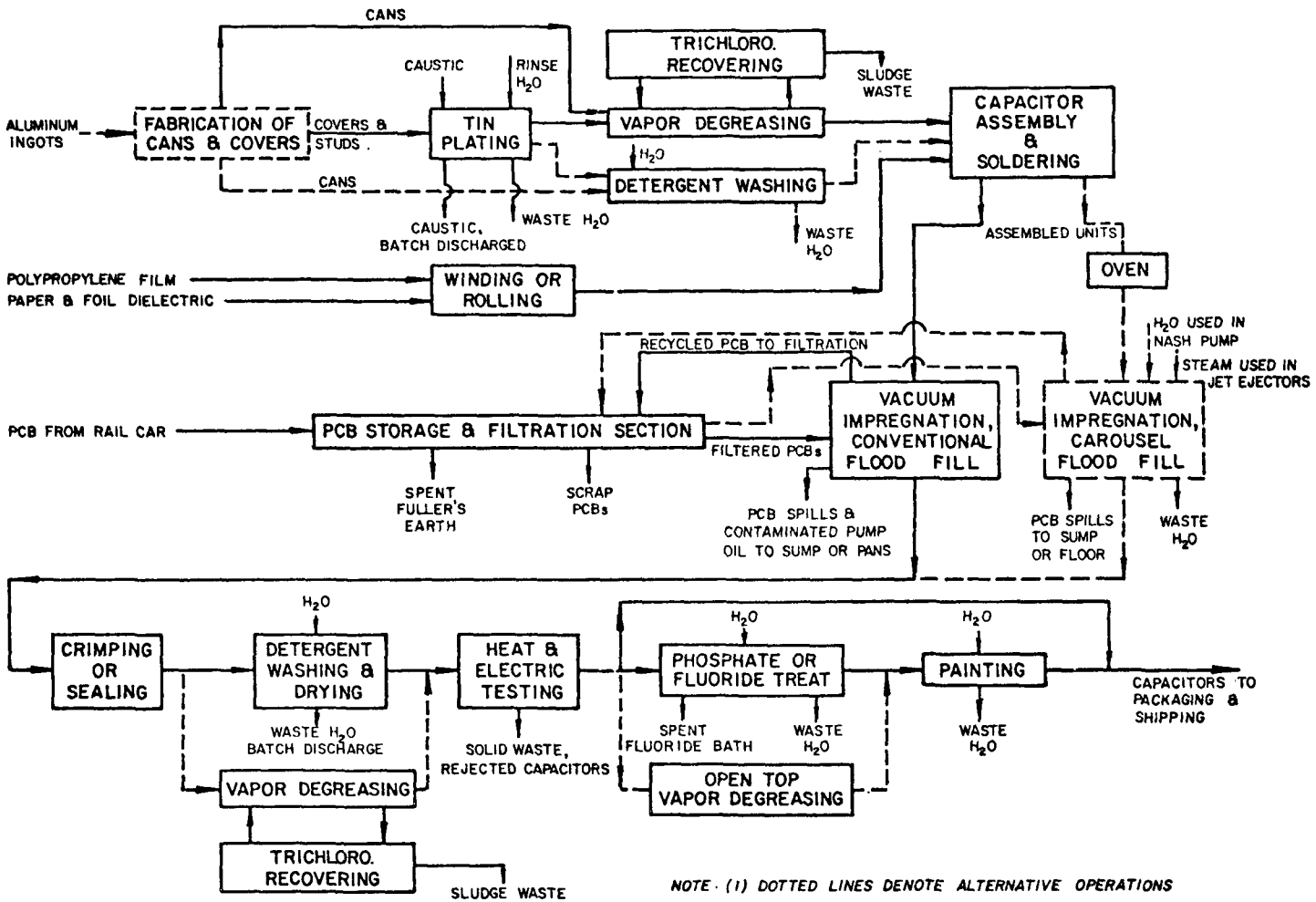

Figure 3.1.1.2-2

GENERALIZED FLOW DIAGRAM FOR THE MANUFACTURING OF SMALL CAPACITORS

(1) Conventional flood filling of capacitors

This type of filling operation is used for impregnating large power and small industrial capacitors. Here the capacitors are arranged in baskets or in large tanks which are subsequently transferred into vacuum chambers. Vacuum is then drawn and the capacitors are kept under vacuum at an elevated temperature for a specific period of time in order to evaporate the moisture from the capacitor interiors. The temperature of the tank is next lowered and PCBs are introduced under vacuum. The capacitors are allowed to soak for some time after which they are transferred to the sealing or crimping station via mobile car, sealed, and excess PCBs are then drained. The sealed capacitors are next sent to vapor degreasing or detergent washing for cleaning the exterior of these units. The clean units are heat soaked and heat tested in an oven and then sent to 100% electrical testing.

Subsequent to electric testing, the capacitors with steel casings are pretreated prior to painting. The pretreatment is either vapor degreasing for painting in an electro-static field or it is several stages of phosphatizing and rinsing operations, prior to automatic spray painting, where water is used to scrub the vapors generated during painting. Most capacitors with aluminum casings are marketed unpainted. However, at some plants a portion of capacitors with aluminum casings are fluoride treated and then spray painted. The capacitors are next either air dried or dried in an infrared oven prior to packaging and shipping.

(2) Automatic Flood Filling Operation (Carousel)

In this method of capacitor impregnation, the assembled units are placed in ovens for the removal of moisture from the capacitor interiors. The baskets containing these capacitors are next transferred to the carousel chamber which is at the loading position. The carousel passes through 13 subsequent cycles consisting of

various degrees of vacuum applications and then subsequent PCB filling and soaking positions. The PCBs are next drained out of the chamber, and the capacitor baskets are removed from the vacuum chamber and tilted to drain excess PCBs into a sump located adjacent to the carousel loading and unloading station. The capacitors are next transferred to the crimping or sealing stations. From this point on the remainder of the manufacturing steps are identical to those employed in conventional flood filling operation.

In general, vacuum in conventional flood filling operations is achieved via mechanical pumps, whereas vacuum in each automatic flood filling station is achieved via a vacuum pump and several stages of steam jet ejectors.

Rejected industrial capacitors are disposed of in 55 gallon drums either directly or after disecting. Rejected power capacitors which are flood filled are returned to the salvaging operation. Here the capacitor covers are cut on an end mill, the PCBs drained and the interiors examined to find the cause of the electrical failure. Where possible the rejected units are then repaired and reprocessed. Otherwise, the capacitor interior is discarded in a designated solid waste drum. The capacitor casing is sent to vapor degreasing and it is subsequently sold to a scrap dealer.

(3) Manifold Filling Operation

At some plants, large capacitors are filled by this method. Here, the capacitors are completely assembled, sealed and vacuum tested; then each unit is filled individually under vacuum through a manifold. The capacitor valve is next sealed, the exteriors spot cleaned with trichloroethylene and then these units are transferred into an oven where they are heat soaked for a given period of time prior to electrical testing. Those capacitors which pass the electrical tests successfully are vapor degreased, painted, dried, packaged and shipped. The rejects are returned to the filling station where

the majority of the PCBs are retrieved through the fill valve under vacuum. The rejects are next transferred to the salvage operation.

Mechanical pumps are used throughout the system to achieve vacuum.

3.1.1.3 Raw Wastes

The raw wastes originating from these plants consist of scrap PCBs collected in sumps, drums and drip pans, contaminated vacuum pump oils, the fractionator bottoms from the trichloroethylene recovery, the caustic bath used, at some plants, for purposes of paint stripping, spent detergent wash and rinse water from capacitor or component cleaning operations, rinse water used in the welding and plating operations, steam condensate from jet ejectors, the seal water used in vacuum pumps, water used in phosphatizing and fluoride baths, water spray used in the paint booths, boiler blow downs and cooling tower blow downs.

Furthermore, in at least one plant in this category, water infiltrating at a subgrade elevator shaft creates an additional waste stream.

Solid wastes from these plants consists of scrap capacitors or capacitor interiors, floor dry and rags and newspapers used for cleaning spills, spent fuller's earth and other filtering media used for PCBs filtration and waterless cleaners used at some plants for hand cleaning purposes.

Non-product PCB discharges, their source and disposition are given in Table 3.1.1.3-1. Adequate data to quantify the various wastes generated at these plants is not available. Information on waste loads reported by some plants are given in Table 3.1.1.3-2.

3.1.1.4 Water Use

The water used at these plants is in the range of 12,500 to 1,260,000 gallons per day. In most plants, water is used primarily for once-through non-contact cooling in vapor degreasers, in pumps and in vacuum tanks. Plant 101 recycles their non-contact cooling water through a cooling tower.

TABLE 3.1.1.3-1. NON-PRODUCT PCB DISCHARGES

Source	Plants 100	101	102	104	105	106
Vacuum pump exhaust	Air	Air	Air	Air	Air	Air
Evaporation & ventilation	Air	Air	Air	Air	Air	Air
Vapors from last stage of jet ejectors	None	None	None	None	Air	None
Personal hygiene	Sewer	Sewer	Septic tank	Incineration[1]	Incineration[1]	Sewer
Laundry water	None	None	Septic tank	None	None	None
Water phase from pump oil/water separator	Sewer	None	None	None	None	None
Sanitary & domestic water	Sewer	Sewer	Septic tank	Sewer	Septic tank leach field system	Sewer
PCB contaminated water	River	-	Treatment plant then river	River	River	Sewer
Non-contact cooling water	River	Recycled	Treatment plant then river	River	River	Sewer
Rainfall & surface runoff	River	Storm sewer	Treatment plant then river	River	River	Storm Sewer
Rinse water from component detergent washing	None	Dry well	None	River[2]	None	None
Water used in non-PCB electrolytic capacitor operations	None	None	Treatment plant then river	None	None	None
Ground water infiltration	None	None	None	Decant then to river	None	None
Controlled sink drains[3]	None	Sewer	None	River	River	None
Rinse water used in the caustic bath & welding	None	None	None	River	None	None
Water used in paint scrubbing	None	None	None	Decant then to river	River	None
Phosphatizing bath & rinse	None	None	None	None	River	None
Scrap oil in drip pans, drums & sumps	Incineration	Incineration	Incineration	Incineration	Incineration	Incineration
Spent fuller's earth, clay & filter cartridge	Incineration	None	Incineration	Stored on site	Stored on site	Landfill
Rinse water from dry-well	None	Incineration	None	None	None	None
Fractionator bottoms (sludge) from trichloro recovery	Incineration	None	Incineration[4]	Incineration	Incineration	Incineration
Spent detergent wash of capacitor exteriors	None	Landfill	None	None	Incineration	None
Spent fluoride wash	None	None	None	None	Incineration	None
Reject capacitors or capacitor internals	Landfill	Landfill	Landfill	Stored on site	Stored on site	Landfill
Newspaper, floor dry & rags	Landfill	Landfill	Landfill	Stored on site	Stored on site	Landfill
Caustic bath	None	None	None	Stored on site	None	None

Notes: [1]Sinks at the impregnation areas are contained; water from the sumps are sent to incineration.
[2]Rinse water from non-PCB, component washing operation.
[3]Employees are advised to use waterless hand cleaning material prior to washing their hands.
[4]Only liquids from this operation are sent to incineration. The sludge from this operation is sent to a municipal landfill.

TABLE 3.1.1.3-2 QUANTITY OF WASTE LOADS
(lbs/ton of PCB used)

	Plants					
	100	101	102	104	105	106
Land Destined Waste	73 (1)	129	65	- (4)	- (4)	- (5)
Wastes to Incineration	100	56	98	109	127	300
Spent Fuller's Earth to Incineration	4.1	None (2)	- (3)	-	-	Unknown

Notes:

(1) Reported as PCBs. We estimate an additional 175 lbs/ton of PCB contaminated solid material which is being landfilled locally.
(2) PCBs are filtered through packed Porocell cylindrical filters. The filter media has an estimated life cycle of 20 years.
(3) This plant uses clay for PCB filtration. The quantity of spent clay sent to incineration is not known.
(4) These plants store their solid wastes consisting of spent fuller's earth, rejected capacitors, rags and floor dry, on site. Plant 104 generates ten 55-gallon drums of waste and plant 105 forty 55-gallon drums of waste each week.
(5) The weight of materials sent to landfill is not known. However, this company reports that during 1974 approximately 650 capacitors were rejected. The rejected units were drained and then sent to a landfill.

Process water used at various plants consists of water used in detergent washing, in ultrasonic washing, condensate from the steam jet ejectors, seal water from the vacuum pumps, water used in phosphatizing and in fluoride baths and rinses, and water used in caustic treatment and painting operations. Additionally, water is used for sanitary purposes and in some plants it is also used as boiler feed.

The quantities and types of water used at these plants are given below:

	Plants					
	100	101	102	104	105	106
Intake gallons/day	740,000	12,500	1,000,000[1]	1,260,000	480,000	336,500
Water Usage in gallons/day						
Non-contact cooling	655,000	3,000[2]	388,000[3]	1,195,000	387,000	326,500
Process water						
Rinse water from hot solder dip	200	-	-	-	-	-
Detergent washing & rinsing	-	8,000	-	25,000[4]	200	-
Phosphatizing baths	-	-	-	-	400	5,000
Water used in tin plating	-	-	-	-	12,000	-
Fluoride bath & rinse	-	-	-	-	50	-
Water used in painting					50	-
Pump seal water & steam condensate					44,000	-
Sanitary	44,940	1,500	52,000	10,000	65,000	5,000
Boiler feed make-up	40,000	-	-	30,000	15,000	-

Notes: (1) 560,000 gallons/day of this water is used as process rinse water in non PCB associated, electrolytic capacitor operation
(2) Make-up water
(3) It has been estimated that only 150,000 gallons of this water is associated with the plant's PCB operation. The balance is used in the manufacture of Mica capacitors
(4) It includes water used in paint stripping and welding operations.

3.1.1.5 Wastewater Treatment

The major in-plant PCB wastes which reach water streams originate in the impregnation areas. Due to the nature of water requirements in this industry, at some plants it is possible to significantly reduce the quantities of wastes entering the water systems by adoption of proper housekeeping measures. Since there is no demonstrated technology available for the terminal treatment of PCBs in wastewaters, there are no PCB wastewater treatment techniques currently in use at any facility. Details on wastewater treatment techniques used at various facilities for purposes of oil recovery or neutralization and on-going containment programs undertaken by some plants to prevent the entry of PCBs into the environment are given in Task II report, "Assessment of Wastewater Management, Treatment Technology, and Associated Cost for Abatement of PCBs Concentrations in Industrial Effluent", February 3, 1976, pages 46 through 52.

3.1.1.6 Effluent Composition

Effluent from plants in this category range from 2500 to 1,260,000 gallons per day. As indicated in the waste treatment section, these effluents are sent either into receiving waterways or into municipal sewers without any PCB treatment. Available information on effluent flow rates and their PCB contents, for most plants in this category, are given in Table 3.1.1.6-1. More detailed effluent information were obtained on four plants and Table 3.1.1.6-2 compares the discharges from these plants. Table 3.1.1.6-3 lists PCB concentration of the plant intake water from various sources.

It is of interest to note that one plant (plant 100) reported large variations in the PCB content of the receiving waters even at the time when the plant was not in operation. They attributed the variations to storm conditions, stirring-up the sediments from the bottom of the river and greatly increasing the PCB concentration in the water phase.

TABLE 3.1.1.6-1 RANGE OF FLOW RATES & PCB CONCENTRATION IN EFFLUENTS FROM CAPACITOR MANUFACTURING PLANTS

Plant No.	Outfalls	Effluent Flow Rate gal/day	Effluent PCB Content ppb avg/max	Effluent PCB Content lbs/day avg/max	Disposition of effluent
100	001	800,000	17/55	0.1134/0.3670	River
101	None	9,000	161/161	0.0121/0.0121	Sewer
102	001	807,000	9	0.0605	River
	002	165,000	3.2	0.0044	River
	003	36,000	3.4	0.0010	River
104	Major outfall	1,060,000	21	0.1856	River
	Cooling water & roof drains	100,000	7.8	0.0065	River
	Lab & roof drains	32,000	4.4	0.0011	River
	Compressor cooling water	72,000	3.7	0.0022	River
	Paint strip rinse	50	4800	0.0002	River
105	Major outfall	650,000	370	2.0058	River
	From spray paint booths	1,500[1]	13,300	0.1664	River
106	None	336,500	26.6	0.075	Sewer
107	None	150,000	1900/4000	2.3769/5.7546	Sewers
108	Cooling water & boiler blowdown	48,000	45/108	0.0180/0.0432	River
	Cooling water	129,000[2]	338/705	0.3636/0.7585	Sewer
	Roof runoff	2,900	1360/2370	0.3290/0.0573	River
	Storm runoff	unknown	3/11	- -	River
109	001	100,000	57/83	0.0475/0.0692	River
110	None	2,570	821	0.0176	Sewer
111[3]	None	18,000	8.7	0.0013	Sewer
112[3]	None	10,224	130	0.0110	Sewer
113	001	12,000	14.3	0.0014	River
126	None	580	6200[3]	0.03	Sewer

Notes: (1) Discharged once every 4-5 weeks.
(2) Contains 10,000 gpd sanitary sewage and 8000 gpd of surface water infiltration
(3) These facilities recycle most of the non-contact cooling water used at the plant. These effluents consist of a small fraction of the cooling water plus their sanitary discharge.

TABLE 3.1.1.6-2

Comparison of Discharges

Plant	100	102			104				105
Outfall	001	001	002	003	002	003A	003B	006	004
pH	7.3	7.4	7.3	7.2	6.5-12.0	5.5-9.8	4.0-9.1	6.8-11.6	5.5-8.6
TSS, mg/l	3	16.6	1.54	2.8	5.2	4.7	4.0	3.1	9.5
PCB, ppb	17	9	3.2	3.4	21	7.8	4.4	3.7	370
Oil & Grease, mg/l	UK	3.10	3.38	2.18	7.20	14.40	30.70	2.66	12.8
Aluminum, mg/l	UK	ND	ND	ND	0.15	0.06	0.11	2.0	
Lead, mg/l	<.05	UK	UK	UK	UK	UK	UK	UK	UK
Copper, mg/l	<.003	UK	UK	UK	0.03	0.02	0.04	0.03	UK
Chromium, mg/l	<.005	UK	UK	UK	0.003	ND	ND	ND	0.03
Phenols, mg/l	<.001	UK	UK	UK	UK	UK	UK	UK	UK
Iron, mg/l	<.19	UK	UK	UK	0.29	0.30	0.34	1.66	0.52
BOD, mg/l		4.37	2.45	1.7	UK	UK	UK	UK	UK

ND - Non detectable
UK - Unknown

Table 3.1.1.6-3

Intake Water PCB Concentration

Plant	100	101	104	105	106	111	112
Source	Municipal	Municipal	River	Well Water	Municipal	Municipal	Municipal
PCB, ppb	0.09-2.5	4-7	57.0	40.0	0.25	1.0	1.0

3.2 Askarel Transformer Manufacturing Industry

All plants in this category manufacture transformers using mineral oil as the dielectric fluid. This dielectric fluid is the principal impregnant used at these facilities. PCB transformer oils (blends of 60 to 70 percent Aroclor 1254 or 1242 and 40 to 30 percent trichlorobenzene) are used in only 5-10 percent of these plants' manufacturing volume.

In general, a transformer consists of a core and coil immersed in a dielectric fluid. There are two broad classifications of transformers: distribution transformers, which are used to step down voltages, and power transformers, which are used primarily to step up voltages. The precipitation power supply units can be actually classified as a third class of askarel transformer. However, the larger plants in this category have only two manufacturing departments — distribution and power; and they manufacture the precipitator transformers in their distribution transformer department. The following types of askarel transformers are manufactured at these plants:

A. Askarel Distribution Transformers

1. Network (Receive up to 14,400 volts and deliver 120, 240 and 480 volts)
2. Pad - mounted (Receive up to 14,400 volts and deliver 120, 240 and 480 volts)
3. Pole - mounted (Receive up to 14,400 volts and deliver 120, 240 and 480 volts) The application of these transformers in power distribution systems places a great premium upon their reliability and high overload capability.
4. Precipitator power supply (Receive 480 AC volts and deliver 50-60 kilovolts low amperage DC) These units are generally installed close to hot gas stacks in an atmosphere that would be a fire hazard to oil-insulated transformers and a corrosive hazard to open dry-type transformers. Sealed dry-type transformers are impractical for high-voltage DC.

Voltages listed cover the majority of askarel distribution transformers. Product scope includes up to 34,500 primary volts and virtually any secondary voltage, 34,500 and below.

Quantities of askarel used in this class of transformers are in the range of 500 to 5,000 lbs. in each unit depending on the rating and the size of the transformer.

A great majority of distribution type transformers have provision for venting. Many of these units are equipped with spring loaded venting devices which vent upon a pressure excursion, and diaphragm rupture discs are offered as a customer option.

B. Askarel Power Transformers

1. Secondary substation
   (a) Load center units
   (b) Secondary substation generation units
   (c) Switchboard units
   (d) Internal units
   (e) Motor control units

   These 5 comprise the largest group of askarel-insulated transformers and they find widespread application in the automobile, paper, chemical, textile, steel, nonferrous metal, cement, mining and petroleum industries. They are used in commercial and public buildings, such as schools and hospitals; in defense and nuclear energy installations; and by private and public utilities.
2. Master unit substation
3. Primary unit substation
4. Limited ampere substation
5. Industrial furnace

Furnace transformers used in the hot, dirty atmosphere in proximity to glass melting and induction furnaces, which require high current, low voltage power supplies (receive up to 15,000 volts and contain 2000 to 4000 lbs. of askarel each). Existing technology does not permit construction of sealed dry-type transformers for these power ratings.

6. Rectifier

Rectifier transformers used for large rolling mills and DC industrial power supplies (receive up to 15,000 volts AC and deliver low voltage high amperage DC. Each unit contains about 19,000 lbs. of askarel). These units are covered by the same comments given for industrial furnace transformers.

7. Transportation

Railroad transformers used on-board in electric locomotives or multiple unit electric railroad cars (receive up to 25,000 volts and contain 700 to 2400 lbs. of askarel in each unit depending on the rating and size of the transformers).

(a) Third rail

These transformers are used for rapid transit systems, and are basically serving a rectifier function

(b) Locomotive

Prior to 1932, all on-board transformers were open dry type. Because of problems with them, railroads went to askarel-insulated transformers. The changes in locomotive design since the 1930's would not now accomodate open dry-type transformers as replacements for askarel units. A recent trend has been to replace askarel by oil units, and this will continue unless new Department of Transportation regulations require nonflammability.

However, since a tunnel fire in 1940 caused by an oil filled locomotive transformer, Penn Central will not allow any oil containing transformer equipped locomotive into New York City.

(c) Multiple-unit car (MU)

These transformers are mounted under the flat-bed of passenger cars. They ride along in this location, about 8 inches above the rail, at speeds up to 150 mph. The transformer must be ruggedly built to withstand the impact of flying debris and constant vibration. Power to the cars is brought in through an overhead catenary and is fed to the underside of the car where the transformer, controls, and propulsion equipment are located.

Space and weight are critical in this application. There are only about 33 inches above the rail. The width of the transformer is limited by the width of the car.

Only oil- or askarel-insulated units would provide the required performance levels in the space available. As with locomotive applications, present Department of Transportation regulations do not restrict the use of flammable liquids, and the use of askarel units has been dictated largely by the economic considerations of fire insurance rates, and by Penn-Central safety regulations.

8. Reactors

These units provide reactance (receive up to 15,000 volts under normal operating conditions. During normal operating conditions, they deliver volts and current as received. During power surges they choke the voltage and deliver the normal output).

9. Grounding,transformers (receive up to 15,000 volts).

3.2.1 Transformer Manufacturing Plants

There are thirteen companies in the U.S. which manufacture askarel transformers at eighteen plants. The name and location of these plants are given in Table 3.2.1-1. Some plants manufacture various types of transformers described above and others manufacture only one specific line of transformers.

All plants in this category were contacted to obtain information on their waste water. Detailed information was obtained on two plants which were visited. The largest U.S. transformer plant (based on quantity of PCB use) was not visited because of lack of cooperation. The data base represents approximately 20 percent of the 1974 PCB usage for transformer application. The PCB usage in this category was 12,000,000 lbs. in 1974 (equivalent to 15.0 to 17.0 million lbs. PCB transformer oil). The PCB usage in individual plants is considered by these companies to be confidential information. The range of plant PCB usage was 975 fold in 1974. Plant ages range from three to eighty-five years.

The amount of askarel used in individual transformers ranges from 40 to 1500 gals. (516 to 19,350 lbs.) with an average of about 232 gals. (3,000 lbs.). A sketch of a large substation transformer is shown in Figure 3.2.1-1. G.E. estimates that the total askarel-insulated units that have been put into service in the United States since 1932 is 135,000, and virtually all of these units are still in service. The lifetime-before-failure is often longer than 30 years, and almost all units that do fail are rebuilt and returned to service. The current production rate of askarel transformers is about 5,000 units per year.

3.2.1.1 Askarel Handling

Few plants in this category purchase PCBs and trichlorobenzene and do their own compounding. Most plants purchase pre-compounded askarel from Monsanto. Smaller plants purchase their askarel in 55 gallon drums, filter the askarel and pump directly into the transformer tanks. To large plants askarel is shipped via rail cars. Rail cars enter in a designated area at the plant site. Askarel is then pumped from the rail cars into the raw askarel storage tank. Any spillage in this area is cleaned by rags or floor dry. The raw askarel

Table 3.2.1-1

U.S. Transformer Manufacturing Industry Using PCBs

Company Name	Location of the Plant
Westinghouse Electric Corp.	South Boston, Va. Sharon, Pa.
General Electric Company	Rome, Ga. Pittsfield, Mass.
Research-Cottrell	Finderne, N.J.
Niagara Transformer Corp.	Buffalo, N.Y.
Standard Transformer Co.	Warren, Ohio Medford, Oregon
Helena Corp.	Helena, Alabama
Hevi-Duty Electric	Goldsboro, N.C.
Kuhlman Electric Co.	Crystal Springs, Miss.
Electro Engineering Works	San Leandro, Calif.
Envirotech Buell	Lebanon, Pa.
R.E. Uptegraff Mfg. Co.	Scottsdale, Pa.
H.K. Porter	Belmont, Calif. Lynchburg, Va.
Van Tran Electric Co.	Vandalia, Ill. Waco, Texas

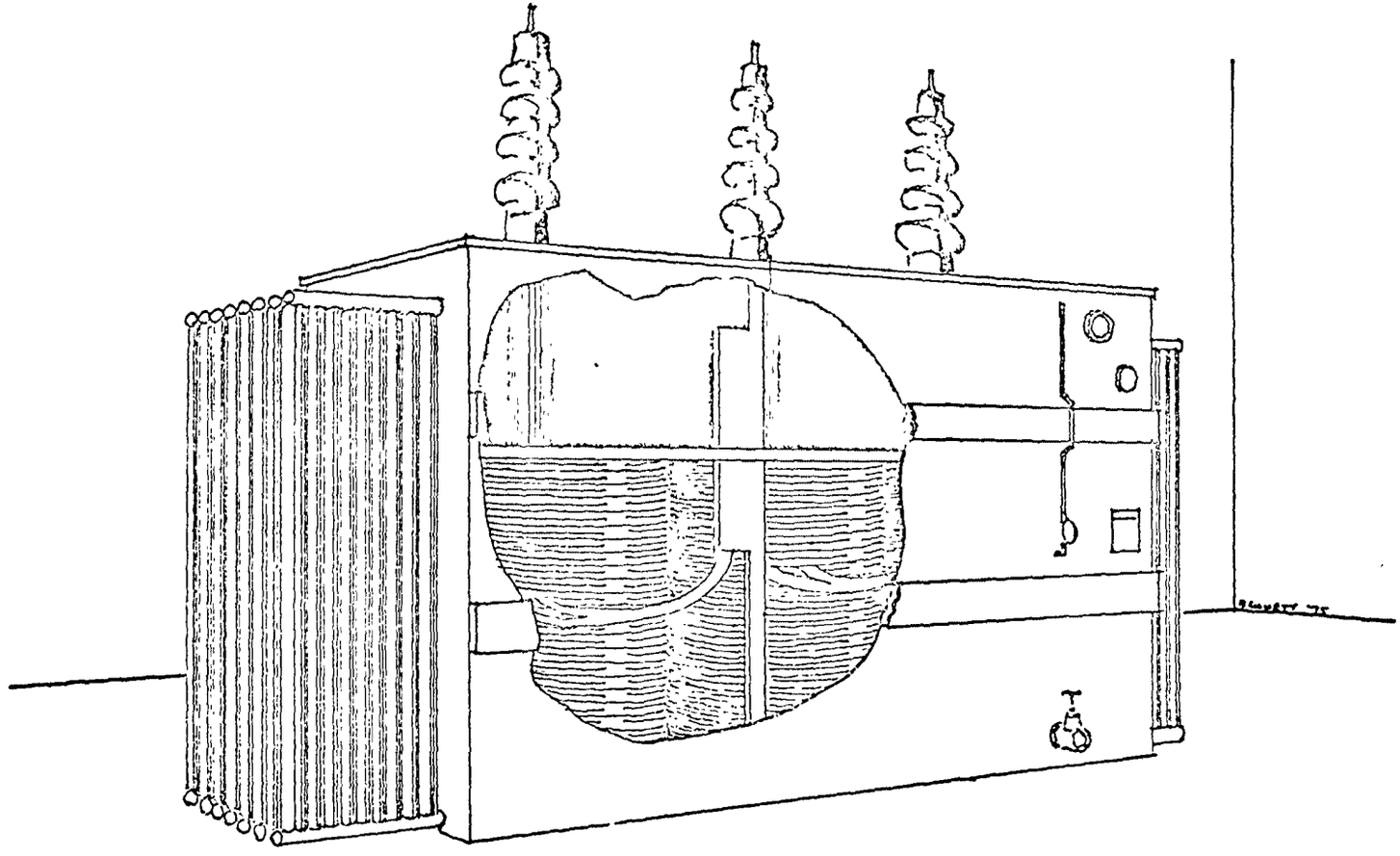

FIGURE 3.2.1-1. SUBSTATION TRANSFORMER

is next filtered through attapulgite clay or fuller's earth and is often passed through a plate and frame type filter for final cleaning and then stored in the finished product storage tanks. Spent clay or fuller's earth from this operation is drummed and stored on site or sent to a landfill.

In some plants, the entire storage area is located within dikes and curbs designed to contain at least the contents of the largest single tank plus sufficient free board to allow for precipitation.

At most plants the askarel is distributed from the tank farm area to the filling station, but at one plant (Plant 103) the finished askarel is next trucked from a covered/curbed storage area to an uncovered/bermed tank farm area. Here the truck enters a shelter area, and the askarel is then pumped from the truck into distribution storage tank.

Recycled askarel from the manufacturing operations is generally returned through pumps into a storage tank or into 55 gallon drums and from there it is either filtered for reuse or is sent to incineration if it is proved to be defective.

3.2.1.2 Process Description

Most plants manufacture all the hardware and components necessary for the transformer assembly. The transformer interiors and the containers are brought to the askarel filling stations where transformers are assembled, filled and sealed.

The filling operation is done in a designated station. At plants where small quantities of askarel are handled, spills and drips are cleaned via floor dry or rags. At plants where large quantities of askarel are handled, filling operation is conducted on gratings located on sumps. All drainage is directed into these sumps. The sumps are inspected and cleaned periodically. All scrap askarel from sumps is pumped into drums and sent to incineration.

Various transformer assembling and filling procedures are being practiced throughout this industry. In general, all transformer assembling and filling operations consist of a predrying step for removing moisture

from the transformer interiors, several stages of askarel filling and askarel topping, addition of electrical connections and bushings, electrical testing and sealing.

At plants where relatively small quantities of askarel are used, the assembly and filling procedure for distribution and power transformers are alike. Some plants manufacture only a given size of transformers (single tank size operations). At larger plants different assembling and askarel filling procedures are employed for various transformer subcategories. Some of the askarel transformer assembling and filling procedures practiced within this industry are described below.

3.2.1.2.1 Assembly and Askarel Filling Procedure for the Distribution and Power Transformers

A. Vapor Phase Drying Prior to Filling

This procedure is primarily used in the filling of network and pad-mounted transformers. The drying of the transformer internals is a vapor phase treatment with a kerosene-like petroleum distillate. A schematic flow diagram depicting this system is given in Figure 3.2.1.2.1-1. The assembling steps for these transformers include the following:

- First the transformer interiors are placed in large vacuum chambers heated with steam coils. The petroleum liquid is admitted, vacuum and heat are applied. The petroleum vapors rise to be condensed on the interiors, exchanging latent heat for sensible heat and raising the temperature of the interiors. After a specific time the liquid is pumped out; vacuum and heat are continued to dry the internals.
- The internals are next removed and placed in their own containers and flushed with askarel at atmospheric pressure. The askarel is kept in the tank until the liquid temperature is lowered to a preset level at which time it is pumped out of the tank. The purpose of askarel flushing is to chill the transformer interiors prior to final filling.

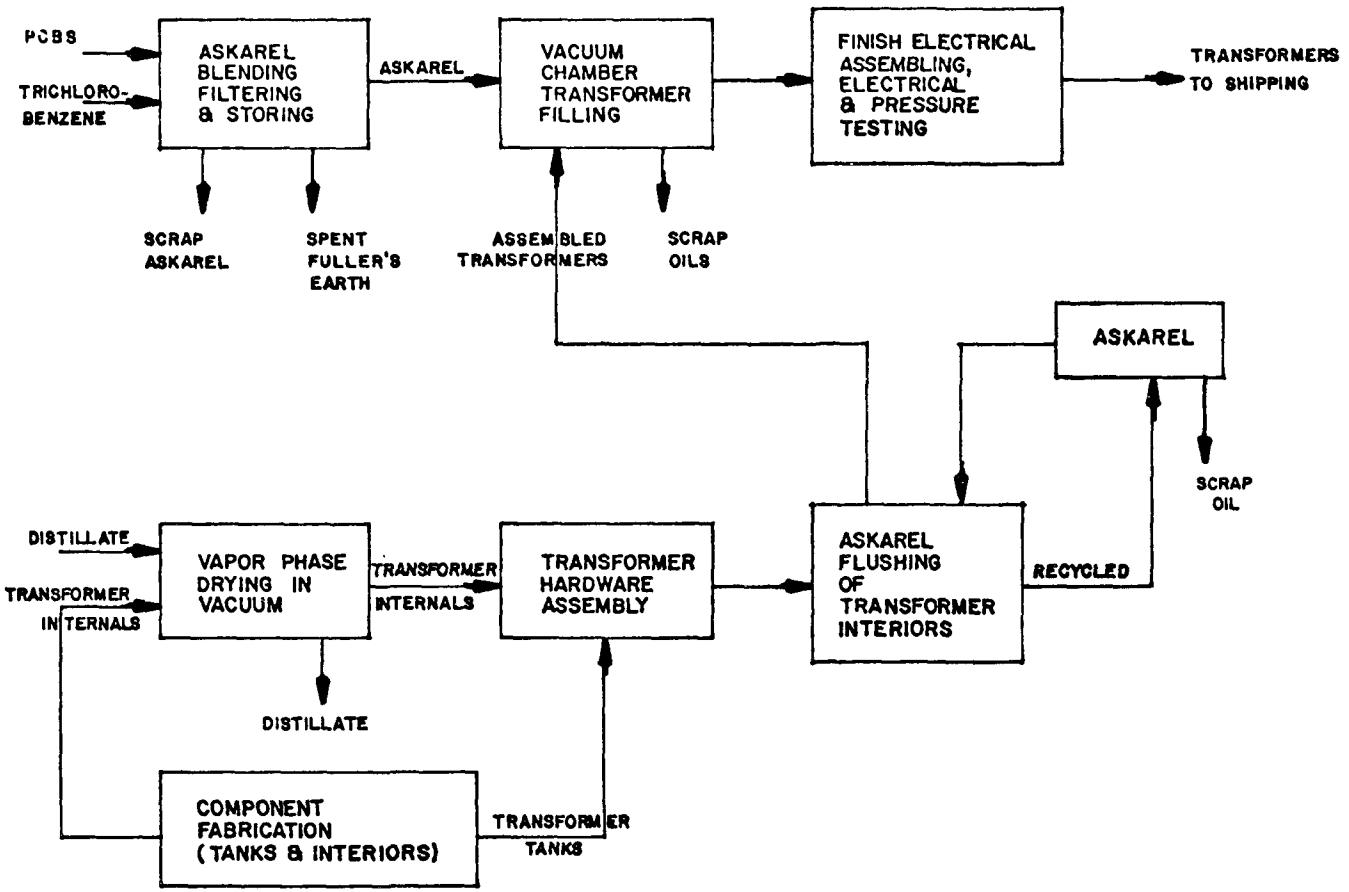

Figure 3.2.1.2.1-1
TRANSFORMER FILLING WITH VAPOR PHASE PREDRYING OF INTERIORS

- The tank is next placed in a designated vacuum chamber. Vacuum is drawn and then fresh askarel is metered in slowly to avoid foaming or flooding.
- The vacuum chamber is next opened, the electrical connections are made and the liquid level in the tank is then brought to the operating level at atmospheric pressure. The transformer tank is then crane lifted and lowered onto conveyors and sent to specified test stations for a series of electrical tests before the transformer is completely sealed.
- If a transformer fails the electrical tests, it is returned; the askarel is drained and reprocessed. Otherwise, the transformer is sent to cover welding operations.
- The tank is next lifted and sent back via conveyor belts to the filling station where it is topped with askarel through an access overhead pipe. The transformer is next pressure tested for leaks. The bottom drain valve is then sealed and the top opening is pipe fitted and sealed. Sealing is accomplished primarily by teflon tape. However, for some transformers, the sealing is done by an air cured sealant at customer's request.

B. Oven Drying of Transformer Internals Prior to Filling

This procedure is used primarily in the assembly of pole type or precipitator transformers. The drying of internals for this category of transformers is accomplished in a convection oven. The internals are then placed in their own casings and the bushings and electrical connections are next made. Vacuum is then applied via a mechanical pump and the tank is filled with askarel while the transformer internals are still at a predetermined elevated temperature. Exhausts from this operation are pulled through a venting system.

Most transformers in this subcategory have gasketed covers with barrel band type connections. Subsequent to the filling operation, the transformers are sealed and pressure tested for leaks. The large units are liquid pressure tested while the smaller ones are air pressure tested. A schematic flow diagram depicting this system is shown in Figure 3.2.1.2.1-2.

The contaminated oil from the vacuum pump is treated as waste askarel and is sent to incineration.

C. Oven Drying of Assembled Units Prior to the Filling

This procedure is used primarily in the assembly of the precipitator transformers. Here the transformer internals are placed in their own casings, the covers are welded on the casings and the assembled tank is placed in the convection oven all sealed. At an elevated temperature, vacuum is applied at predetermined intervals. The tank is then transferred to the filling station where askarel is added through an upper pipe opening under vacuum. Both the top piping and the drain valve are next sealed and the unit is then pressure tested. A schematic flow diagram depicting this system is shown in Figure 3.2.1.2.1-3.

D. Procedure for Assembling the Askarel Filled Power Transformers

The same procedure is used to assemble all types of askarel filled power transformers. The transformer internals are dried in sealed vacuum tanks, then they are placed in their own containers and the cover is welded and sealed. The unit is then pressurized and checked for leaks by a helium detector. The tank is next transferred to the filling station where low vacuum is drawn for a period of 24 hours. The askarel line is then connected and the tank is filled slowly while under vacuum up to the operating level. The unit is then sealed and sent to electrical testing. After the tests the transformer is returned back to the filling station where it is nitrogen pressure tested just prior to shipping. The schematic flow diagram depicting this system is shown in Figure 3.2.1.2.1-2.

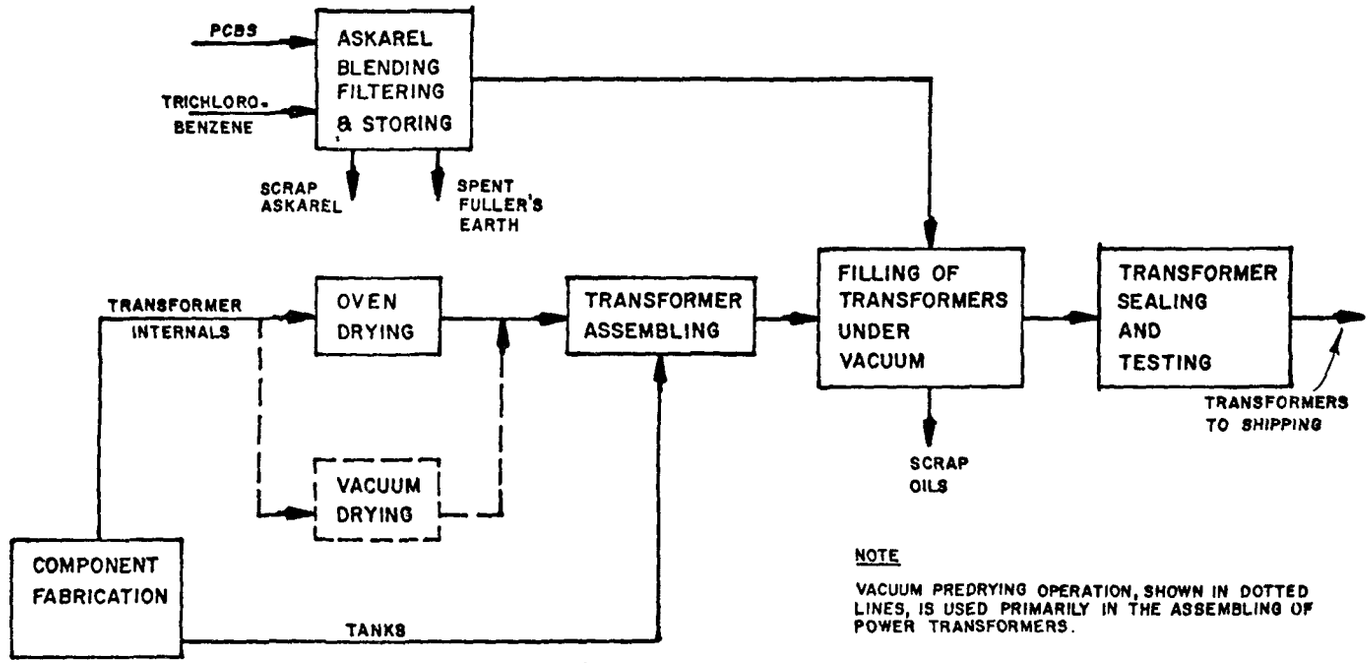

Figure 3.2.1.2.1-2

TRANSFORMER FILLING WITH OVEN OR VACUUM CHAMBER PREDRYING OF TRANSFORMER INTERNALS

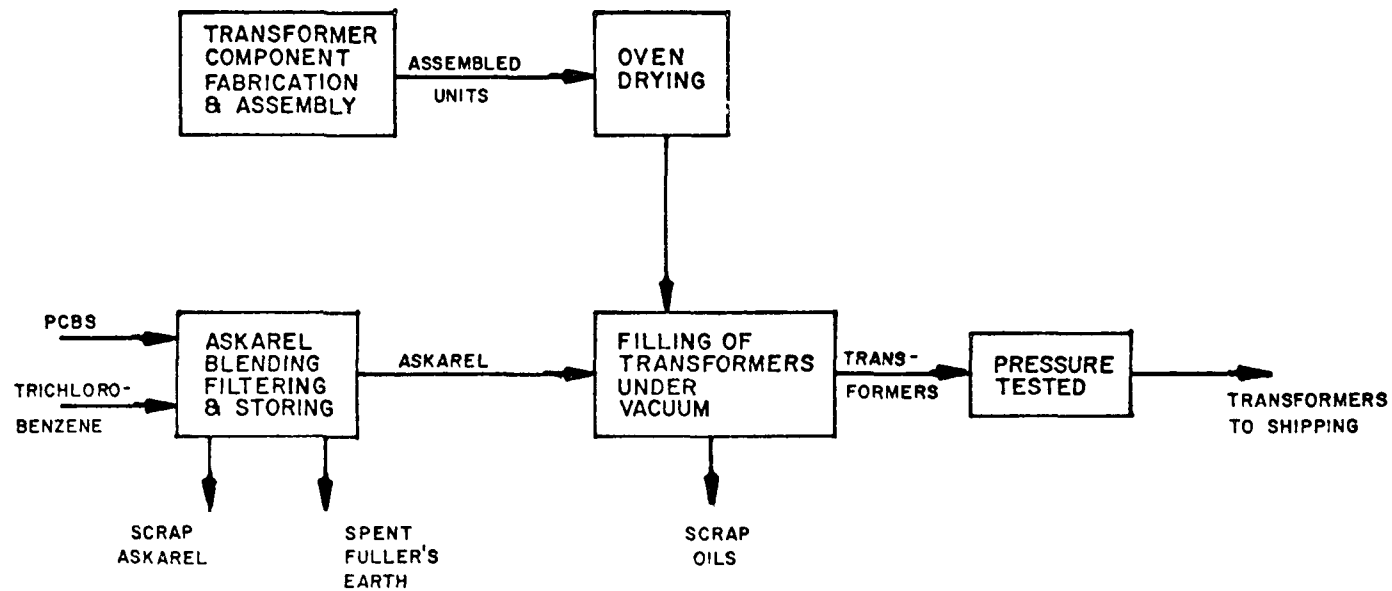

Figure 3.2.1.2.1-3

TRANSFORMER FILLING OPERATION WITH OVEN PREDRYING OF ASSEMBLED HARDWARE

All power transformers have air space on the top and are equipped with an air cooled circulation system. Additionally, each unit has a spring loaded relief valve as standard equipment. These transformers have a greater potential for environmental contamination through the vent system, via leaks on the pump and the valves.

3.2.1.3 Raw Wastes

In general, the process raw wastes from these plants consist of waste askarel collected in sumps or pans at the filling stations, contaminated vacuum pump seal oil, contaminated kerosene-like petroleum distillate (used in at least one plant in the vapor phase drying operation), contaminated askarel used for transformer interior flushing and contaminants in the plant effluent.

Additionally, plant 103 has a unique waste stream consisting of contaminated ground water which is being pumped from three caissons at the plant site. Plant 103 also has a bleedwater discharge from their incineration system.

Solid wastes from these plants consist of rags and floor dry used for miscellaneous cleaning purposes and spent clay used for Aroclor filtration. Additionally, at plant 103 it includes the sludge from oil/water separators.

Non-product PCB discharges are shown in Table 3.2.1.3-1. Estimates on the quantities of raw waste generated in two plants which were visited are given below.

Quantities of Waste Loads	Plants 103	114
Wastes to incineration, lbs/ton of PCB used	115	98.0
Solid waste material stored on site in 55 gallon drums	135 units	Unknown

3.2.1.4 Water Use

Water is not an essential component of the transformer manufacturing process. PCB wastes which reach water streams at these plants are due to inadvertent occasional loss during handling and residuals accumulated

TABLE 3.2.1.3-1

NON-PRODUCT PCB DISCHARGES

Source	103	114
Plant exhaust	Air	Air
Incinerator exhaust	Air	None
Personal hygiene and sanitary water	Sewer	Sewer
Ground water pumped through caissons	To oil separators then river	None
Water used at plant	To oil separators then river	Sewer/river
Contaminated oils and waste PCBs	incineration	Incineration
Floor sweepings and rags used for cleaning	decapsulator	Incineration
Rejected transformer interiors for copper recovery	decapsulator	Stored on site
Contaminated and defective empty drums	To steel furnace in steel mill	Shipped to the company which handles their contaminated oils
Sludge from the oil separator	Stored on site	None
Clay used for askarel filtration	Stored on site	None

around the drainage systems from past operations when no precautions were taken in handling and disposal of PCBs.

This category uses water primarily for non-contact cooling purposes in vacuum pumps, compressors and at some plants as contact cooling in their welding and plating operations and in phosphatizing of the steel surfaces prior to painting. All contact cooling operations listed above are primarily non-PCB related operations. Only plant 103 has a PCB related process water which consists of the water used in their waste incineration system for quenching the hot gases from the reaction section. Plant 103 is also the major water user in this category.

In most smaller plants all cooling is accomplished by air. At these plants water is primarily used for hygiene and sanitary purposes and for occasional compressor or pump cooling purposes. The only water that comes into contact with PCBs at these latter plants is that used for personal hygiene. The types and quantities of water used at two plants visited are given below.

	Plant No.	
Water Usage in Gallons/day	103	114*
Non-contact cooling	1,646,000	38,000
Process water		
. Contact cooling	183,000	None
. Detergent washing	2,000	None
. Incineration quench	122,000	None
Hygiene	Unknown	300
Boiler make-up	Unknown	200
Sanitary	Unknown	9,000
Non PCB related		
. Water used in a lab	Unknown	500
. Water used for external cleanups	None	4,000

*Breakdown of the water usage was estimated.

3.2.1.5 Wastewater Treatment

There are no effluent treatment techniques in practice at any plant in this category for the removal of PCBs. However, in 1972, a John Zink designed thermal oxidation incinerator was erected at plant 103 to safely dispose of PCBs. A schematic flow diagram of this unit is given in Figure 3.2.1.5-1. This unit consists of two steam atomized burners and a long cylindrical chamber to provide residence time for thermal degradation. Following the chamber is a water spray quench pot and a counter current packed scrubber column located at the base of the stack.

The waste oils are brought into the incinerator site in 55 gallon drums or by truck trailers. These waste oils are next pumped from the drums or from the trailers into the incinerator feed tanks. The steam atomizing burners inject the combustible liquid wastes into the combustion section with air, in such a manner to create a vortex type turbulence. This produces high heat release and effective combustion promoting the thermal degradation process. After combustion, the waste gases proceed through the oxidation chamber which provides 3 to 12 seconds of residence time at temperatures 1600 to 1800°F for the degradation reactions to go to completion. The flue gases from the chamber pass through a quench pot which contains a series of water sprays to cool the gases. An induced draft fan then forces the cooled gases through the packed bed scrubber column. Here, acidic ions produced during the combustion process are absorbed in the scrubber liquor. The scrubber liquor is then neutralized and disposed into the sewer.

A high temperature decapsulator has been incorporated in the thermal oxidizer unit for solid incineration and copper recovery. The exhaust of this unit is routed to the upper end of the oxidizer chamber.

Details on wastewater treatment techniques utilized at one facility (plant 103) for purposes of oil recovery and on-going containment programs undertaken by two plants (plants 103 and 114) in order to prevent the entry of PCBs into the environment are covered in the Task II report, "Assessment of Wastewater Management Treatment Technology, and Associated Costs

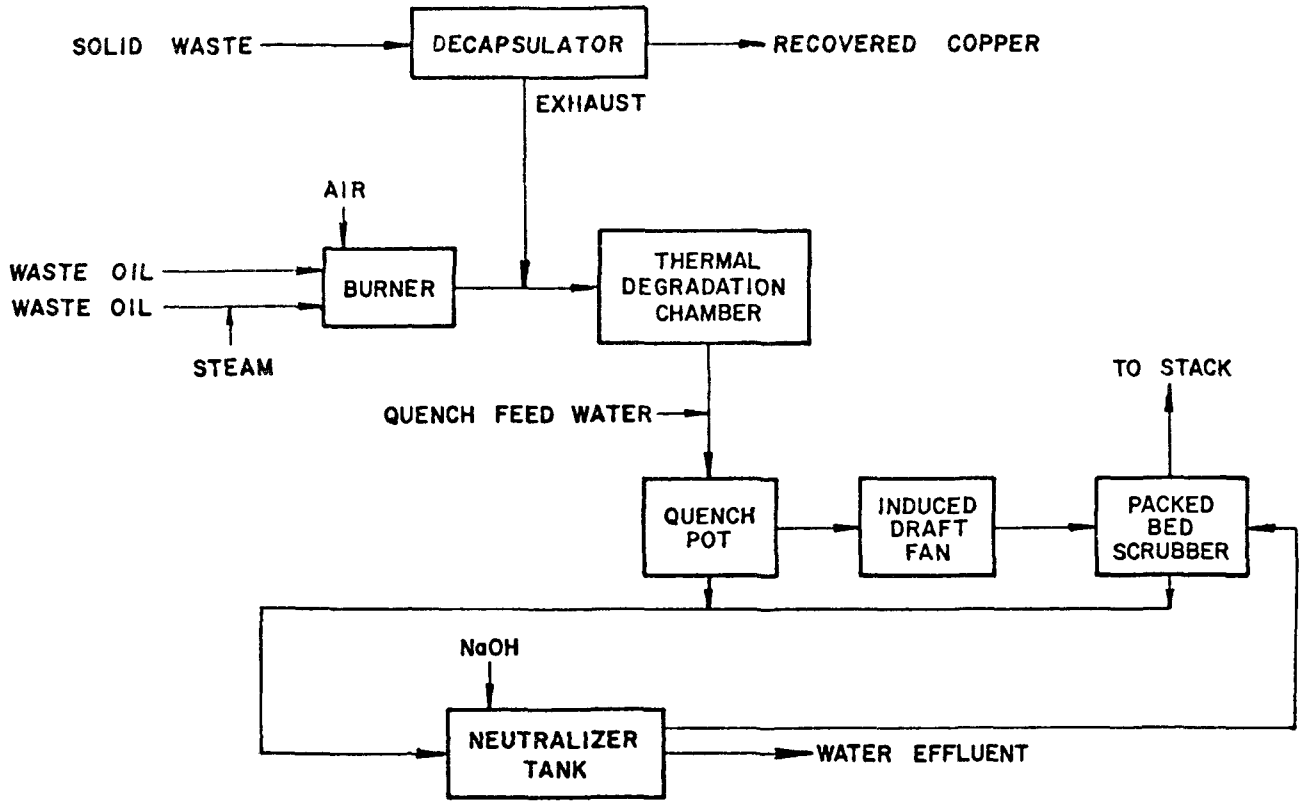

Figure 3.2.1.5-1. PROCESS FLOW DIAGRAM FOR THERMAL OXIDIZER INCINERATOR AT PLANT 103

for Abatement of PCBs Concentration in Industrial Effluents", February 3, 1976, pages 71 through 75.

3.2.1.6 Effluent Composition

Effluent flow rates and PCB contents are available from the three plants which discharge into the rivers and from two plants which discharge primarily into sanitary sewers. Detailed effluent composition is available only on Plant 103. This information is given in Tables 3.2.1.6-1 and 3.2.1.6-2, respectively.

The remaining plants in this category which discharge to sanitary sewers report that their water usage, for reasons other than for sanitary purposes, is minimal. However, they have no data available on the quantities and composition of water discharged.

3.2.2 Askarel Transformer Repair Industry

A total of 13 companies repair transformers containing PCBs at a total of 131 locations. The current industry structure has been identified, and several potential problems were noted. No estimates have been made of the pollution which occurs from this industry.

3.2.2.1 Transformer Inspection and Maintenance

Askarel transformers are very reliable and have lifetimes that range up to 40 years. The failure rate of askarel filled transformers has been estimated by the manufacturers to be 0.2 percent per year. Failure occurs primarily due to the degradation of the PCB fluid caused by electrical arcing within the transformer.

Nine electrical utilities were contacted to determine their inspection and repair procedures. All of these companies have some type of program, usually informal, for the checking of their transformers. In most cases this consists of a simple annual inspection which may include a general cleaning operation of the facilities adjacent to the hardware (e.g., the vaults may be cleaned and vacuumed). Inspection involves looking for evidence of leaks. One utility performs an annual power factor test on the windings, and if this test indicates a problem in the transformer, then its dielectric fluid

TABLE 3.2.1.6-1

PCB CONCENTRATION IN EFFLUENTS FROM TRANSFORMER MANUFACTURING PLANTS

Plant No.	Discharge Designation	Effluent Flow Rate Gal/Day	Effluent PCB Content ppb Avg/Max	Effluent PCB Content lb /day Avg/Max	Disposition of Effluent
103(1)	005	1,310,000	4.9/120	0.0535/1.311	River
	006	550,000	7/75	0.0321/0.344	River
114	None	50,000	Unknown	Unknown	Sewer
	None	2,000(2)	Unknown	Unknown	River
115	002	36,000	<1/2	<0.0003/0.0006	River
	003	24,000	2/113	0.0004/0.0226	River
	004	150,000	<1/3	0.0013/0.0039	River
116(3)	#1	252,000	3.4/11	0.0071/0.0231	River
	#2	378,720	2.1/3.8	0.0066/0.0120	River
	#3	504,000	8/19.1	0.0336/0.0803	River
117	Batch discharge	13,500	28.6/unknown	0.0032/unknown	Sewer

Notes: (1) This plant has other discharges out of their properties. Discharges listed above are those associated with PCB related operations.

(2) Estimated.

(3) Discharges designated as #1, #2, and #3 are the combined effluents from their power house, and one each from their two manufacturing areas, respectively. According to the plants' Corps of Engineers permit application form, filed in July 1971, this plant has 13 outfalls.

TABLE 3.2.1.6-2

INFLUENT AND EFFLUENT COMPOSITIONS OF PLANT 103

	Incoming Municipal Water	Outfall 005		Outfall 006	
Average flow rate million gpd	1.86	1.31		0.55	
pH yearly average	6.4	7.7		5.5	
pH min.-max.	—	6.4-8.0		3.1-7.1	
		Avg/Max Conc.	Avg lbs/day	Avg/Max Conc.	Avg lbs/day
Alkalinity, mg/l	14	25/25	273	15/20	69
BOD, 5-day, mg/l	2	3/3	28	27/30	124
Chemical oxygen, mg/l	9	23/34	251	75/92	344
TS, mg/l	69	70/70	765	364/497	1671
TDS, mg/l	68	67/67	735	341/483	1565
TSS, mg/l	1	3/9	31	23/30	106
TVS, mg/l	34	19/22	208	89/96	408
Ammonia, mg/l (AN)	0.05	<0.2/1.0	<2	2.8/3.0	13
Kjeldahl Nitrogen, mg/l	0.45	0.8/1.0	9	4.6/5.1	21
Nitrate AsN, mg/l	0.15	0.55/0.9	6	0.98/1.02	5
Phosphorus Total, mg/l	0.01	0.04/0.05	<1	54/124	248
Color (As P)	30	25/30	-	30/30	-
Turbidity, mg/l	<25	<25/<25	-	<25/<25	-
Total hardness, mg/l	44	31/44	340	33/44	152
Organic Nitrogen, mg/l	0.5	0.6/0.7	6.6	1.8/2.0	8
Sulfate, mg/l	9.0	14/18	153	9.0/9.0	41
Sulfide, mg/l	<0.1	<0.1/<0.1	<1.0	<0.1/<0.1	<0.5
Chloride, mg/l	6	6/8	61	11/13	50
Cyanide, µg/l	<0.00	0.00/<0.01	0.04	<0.00/<0.00	<0.02
Fluoride, mg/l	0.16	-	-	9.5/12.0	44
Aluminum - total, µg/l	100	500/550	5	200/200	0.9
Boron - total, µg/l	70	-	-	9/70	0.04
Calcium - total, mg/l	6.5	7.0/7.5	77	7.7/8.0	35
Chromium - total, µg/l	<10	30/30	0.3	310/350	1.4

TABLE 3.2.1.6-2 (CON'T)

	Incoming Municipal Water	Outfall 005		Outfall 006	
Cobalt, total, µg/l	<7	4/4	0.04	-	-
Copper - total, µg/l	500	20/500	0.2	30/500	0.13
Iron - total, µg/l	330	150/330	1.6	3200/3500	15
Lead - total, µg/l	<30	<10/30	<0.1	80/90	0.36
Magnesium - total, µg/l	7	3/7	36	3/7	16
Manganese - total, µg/l	200	50/200	0.5	120/200	0.55
Mercury - total, µg/l	<1	<1/<1	<0.004	2/2	0.01
Molybdenum - total, µg/l	<7	-	-	90/99	0.41
Nickel - total, µg/l	100	<10/100	<0.1	10/100	0.04
Potassium - total, mg/l	1.1	0.88/1.10	9.6	0.99/1.1	4.5
Silver - total, µ	<10.0	-	-	2.0/2.0	0.009
Sodium - total, mg/l	5	6/10	66	25/30	117
Tin - total, µg/l	<7	7/10	0.07	-	-
Titanium - total, µ	2	-	-	3/3	0.01
Zinc - total, µg/l	30	70/75	0.76	730/800	3.4
Oil & Grease, mg/l	1.0	2/10	21	3.0/9.0	13.7
Phenols, µg/l	3	101/110	1.1	168/180	0.77
Surfactants, mg/l	<0.02	0.11/0.15	1.2	0.22/0.30	1.0
Chlorinated hydrocarbons, mg/l (except pesticides)	<1.000	1.000/5.000	11	1.000/1.000	4.6
PCBs, µg/liter	-	4.9/120	0.05	7/75	0.03

is tested - at least this is the theoretical method of operation since the company has only two PCB-type transformers in use and neither has ever failed the power factor test. Another company measures the operating temperature of the units and makes a visual inspection for leaks; this company also claims that transformers located in the generating facility are inspected daily (visual inspection) and that units located in vaults are checked at least weekly. While most major inspections are carried out annually, the range of time intervals between inspections is 6 months to 18 months, with one company saying that they inspect at least once every 2 or 3 years, and another saying that substation transformers are inspected weekly.

These companies perform no sampling and analysis work on their askarel transformers. One company has annual inspection of all transformers, but only the mineral oil-type units have samples withdrawn for analysis to see if there is deterioration or contamination. A company which used to perform power-factor tests until about 8 years ago has since abandoned such tests and does not withdraw askarels for analysis.

Servicing of transformers is only rarely performed in-house. The response of most companies was that servicing of askarel-type transformers had yet to be required. One company did its own servicing up until 8 or 10 years ago, but since then, because of the special handling problems associated with askarels, such work has been farmed out to G.E. and Westinghouse service centers. The general trend seems to be that major servicing is more likely to be done at special facilities outside the utility companies while minor servicing, such as the repair of small leaks is taken care of at the transformer site by the utility.

More than half of the companies have not scrapped transformers in the past five years, and most have not scrapped any in the past 10 years. One utility company has had no transformer failures in 20 years (except for a minor leak of less than 1 gallon ten years ago). These companies have no specific disposal methods for such instances. One company said that scrap transformers are handled through a local junk company and that askarel disposal is the junk company's problem. A company which says it has scrapped no transformers says that when the PCB capacitors fail they are shipped back to

the manufacturer; presumably, though it was not stated directly, failed transformers would also be returned to their manufacturers. One company which is proud of its disposal practices has disposed of 200 to 400 gallons of askarel per year since 1970 (most of it comes from failed capacitors); until this year it was all sent to Monsanto for incineration, but starting this year they have been sending it to Sheffield, Ill., where it is dumped in a landfill that has been approved by EPA for the disposal of radioactive wastes. This company stated that many utility companies dump their PCB-related wastes in local landfills.

There has been little PCB lost to the environment through the safety release valve on the transformers. The consensus response was that if the valve released there would be askarels "all over the place". The spokesman for one utility did not know whether the transformers they used had safety valves. One company said that a transformer vented several years ago when a fuse that was supposed to protect the transformer did not protect it.

Very seldom is a failed transformer scrapped. However, sometimes the repair work needed in a failed unit could be rather extensive and very costly. The owner of the unit may request to scrap his unit. If the repair shops scrap a transformer, they follow the procedure recommended by NEMA. However, if the owner of the transformer decides to handle the disposal of the unit himself, the unit is shipped back to the owner. Disposal is then usually made through a local junk dealer.

3.2.2.2 Repair of Failed Transformers

In talking with a major transformer manufacturing company which specializes in the servicing of transformers, it was learned that PCBs used by service shops are primarily for refilling the units which have failed and have to be repaired. Apparently, very few facilities handle their own servicing. Major service work is almost always handled by repair shops while minor service work, such as changing a gasket, to prevent a minor leak, may be taken care of by the owner of the transformer. Additionally, the repair

shops often handle askarel conditioning services. In such a case, the serviceman carries the filter press to the costomer's site and performs this service on site. Several gallons of PCBs are used in this service for topping the unit and adjusting the level. The procedure for the repair or disposal of failed transformers and the handling of the PCB liquid in those transformers is summarized in Figures 3.2.2.2-1 and 3.2.2.2-2.

A number of potential sources of environmental contamination have been identified, and are discussed in detail in the following notes to the figures.

1) Testing and analysis of PCB transformer fluid has been largely discontinued due to the strict requirements imposed on the disposal of the samples. This change in procedure may be expected to increase the probability of major failures of transformers containing PCBs.

2) Accidental spills of PCBs from transformers can occur due to leaks, venting caused by short circuits, or mechanical damage to the transformer case. In most cases, the transformer is contained in a vault or is surrounded by dikes which will limit the spill to a controlled area. Only in the case of railroad transformers would the leakage resulting from an accident be expected to be uncontrolled.

3) Transformers which are scrapped by the owner/user may be a serious potential source of pollution. Those transformers built during the past several years are well marked with the hazards of the PCBs which they contain. Disposal of junked transformers by electrical repair shops is governed by a detailed specification of the National Electrical

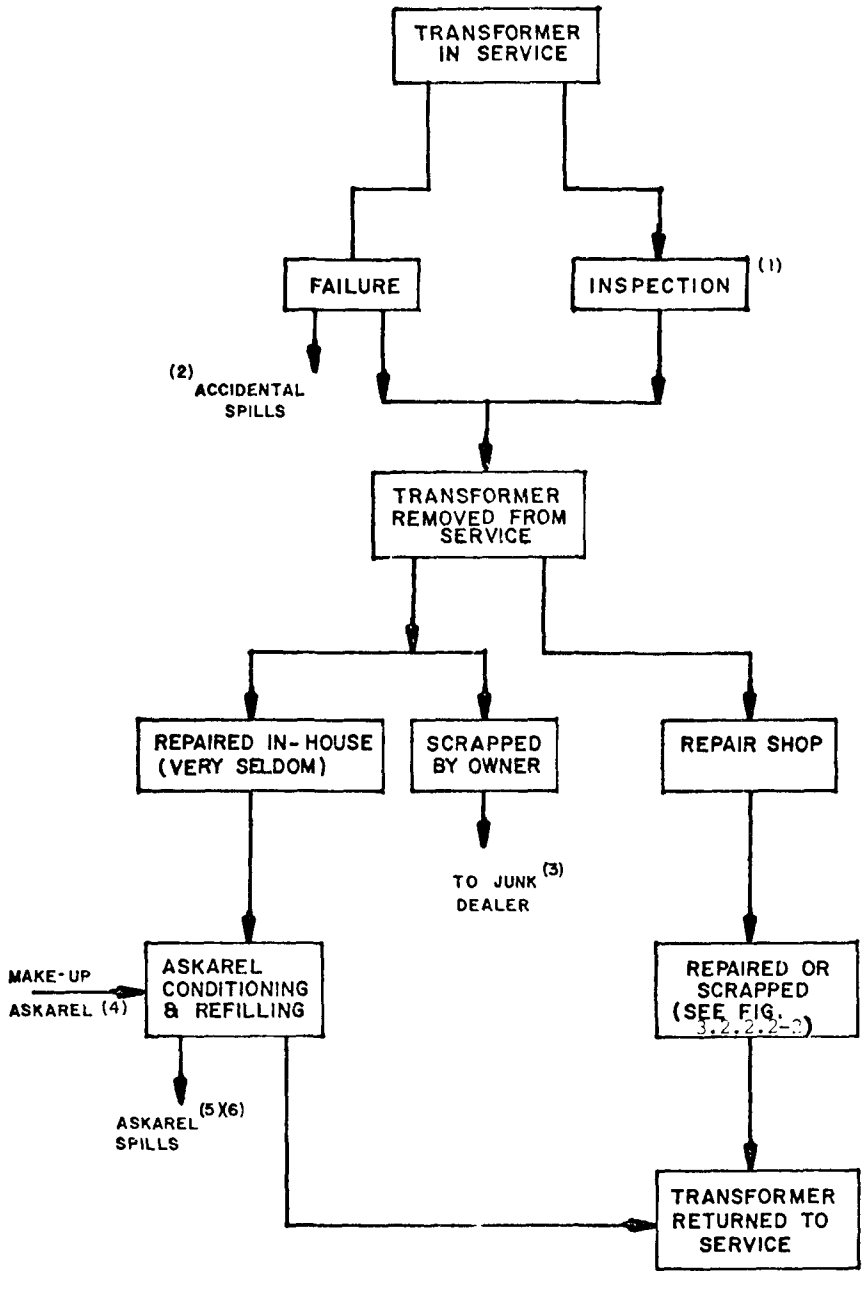

FIGURE 3.2.2.2-1. TRANSFORMER MAINTENANCE & SERVICING

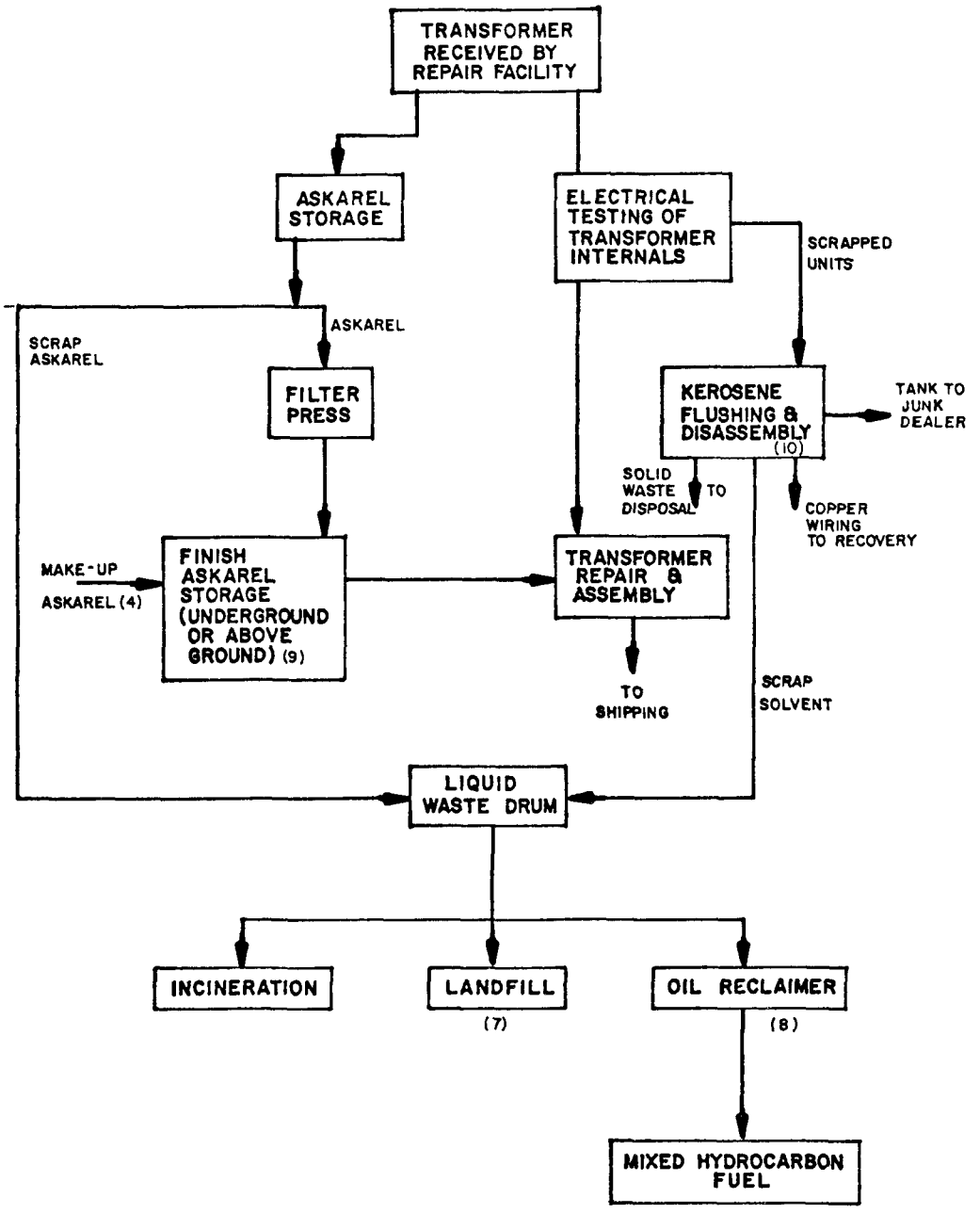

FIGURE 3.2.2.2-2. TRANSFORMER REPAIR

Manufacturers Association (NEMA). However, the disposal of transformers through small local junk yards may result in significant pollution because:

a) The junk yards are not familiar with PCB handling procedures.

b) The older transformers are not marked with special instructions.

c) 90 to 95 percent of the transformers seen by the junk yards would contain mineral oil, and the occasional transformer containing PCB would be noted only as containing non-flammable transformer oil. This would not result in any special handling of the PCBs.

d) Disposal of PCBs by open burning in a trash incinerator will not completely destroy the PCBs, but will vaporize this material and disperse it into the atmosphere.

This is only a potential problem at this time, as uncontrolled scrapping of transformers has not been documented. However, several responses to the questionnaire claimed that uncontrolled handling of PCB filled transformers by junk yards was thought to have occurred in the past.

4) Considerable PCB is shipped in 55 gallon drums to repair shops and users. The residue in each drum after it is emptied may contain up to a pound of PCB. Empty drums which are recycled to drum reclaiming facilities or scrap yards would introduce this relatively small, but significant, amount of PCB into an uncontrolled environment. All drums presently in use have detailed handling instructions painted on the drum, and this information

should minimize any potential problems from this source.

5) Filter residues and losses are in general treated as any other waste containing PCBs and are being placed in drums and held for controlled disposal.

6) Scrap PCB is packaged in 55 gallon drums. The NEMA instructions are very specific as to the required disposal procedures for this material. Small repair shops which do not have access to controlled disposal sites or services have been known to mishandle the scrap PCB by disposing into uncontrolled landfills (note 7) or through oil recovery services (note 8).

7) Landfills are a satisfactory disposal method for scrap PCB transformer oil if the leach water is monitored. In a few cases scrap PCB and PCB contaminated material is sent to a municipal dump.

8) At least one case is suspected where PCB transformer oil may have been sent to an oil reclaiming company which mixed it with other hydrocarbon wastes and sold it to a power company as fuel. It should be noted that the mineral oil used in 90 to 95 percent of the transformers presently in service. Problems may result when PCB transformer oils are mixed with mineral oils and handled in this manner.

9) New and conditioned PCB transformer oil is normally stored in large surface or underground tanks at the repair shop. Leakage may occur from

these tanks into ground waters. No standards have been established for checking for such losses.

10) The scrapping of unrepairable transformers is covered by the NEMA standard (ANSI C107.1-1974). This standard requires that the transformer be drained and then flushed with solvent to remove PCB residues before the metal values are reclaimed. Possible sources of contamination would be incomplete flushing and the mixture of used solvent with hydrocarbon rather than with PCB residues. This is considered unlikely in the major transformer repair shops.

3.2.2.3 PCB Usage in the Transformer Repair Industry

The PCB usage figures for the transformer manufacturing and repair industries are summarized below.

	PCBs Use, lbs				
	1971	1972	1973	1974	1st half-1975
New PCBs used to repair transformers	590,000	580,000	440,000	780,000	480,000
PCB reclaimed and reused in repair of transformers	2,000	64,000	160,000	110,000	78,000
PCB shipped to user to replace transformer losses	3,000	3,000	4,000	2,000	2,000
PCB disposed in transformer repair				570,000*	
PCB used in transformer manufacturing				11,000,000	
Total PCB in service in transformers				270,000,000	

* This figure may include PCBs contaminated wastes as well as PCB.

3.2.2.4 Transformer Service Life

There have been relatively few failures of PCB filled transformers, and statistically significant data is not available to support service life estimates. General estimates by transformer manufacturers indicate the following expected service life of this equipment:

Service life of substation transformers	40+ years
Service life of power transformers, including those on railroad locomotives	30 years

Transformers exhibit a small but significant infant mortality rate (failure within the first year of service). Overall transformer failure rate estimates are in the range of 0.2 percent per year.

3.2.2.5 Usage rate of PCBs in Transformer Repair

The total PCB used in 1974 in the repair of transformers was approximately 0.3 percent of the estimated total PCBs in service in transformers. This figure is consistent with the estimated failure rate of 0.2 percent per year for in-service transformers.

The usage of PCB in the transformer repair industry is approximately 7 percent of that of the transformer manufacturing industry.

3.3 Investment Casting

The investment casting industry produces precision-cast metal parts and shapes for the aircraft and other machinery manufacturing industries. Approximately 25 of the 135 investment casting foundries in the United States currently use PCB filled waxes in the manufacture of metal castings. The PCB incorporated in the waxes is decachlorobiphenyl (deka). The remaining foundries use either polychlorinated terphenyl (PCT) filled waxes or unfilled waxes. This section presents a review of the usage of deka filled waxes in the industry, including available information on use history, process technology, and potential

PCB-bearing waste streams. Currently available information on PCTs usage in the industry is also included.

3.3.1 Background

There are currently 135 investment casting (IC) foundries and five investment casting wax manufacturing plants in the United States. The IC industry had its start in the United States during World War II when urgent demands for arms and aircraft parts required more efficient methods of producing finished, precision parts than standard machining techniques offered. During the war the waxes used by IC foundries consisted of a blend of carnauba wax, beeswax, paraffin, and rosins. However, over the last decade wax formulations have evolved which consist of a variety of polymeric compounds and other fillers such as decachlorobiphenyl and PCTs. By reducing the wax content through low-shrinkage fillers (such as PCBs and PCTs) volumetric shrinkage of the ceramic mold is controlled. This allows the production of metal castings with smaller dimensional tolerances than were available with the original unfilled waxes.

The major wax manufacturing companies are:

1. Yates Manufacturing Company, Inc.
2. M. Argueso and Company, Inc.
3. Freeman Manufacturing Company
4. J. F. McCoughlin Company

The Yates Manufacturing Company, Chicago, Ill., is the sole known U.S. supplier of deka waxes. The decachlorobiphenyl content is 30 percent of the total wax by weight (Solomon, P., Yates Manufacturing). Yates currently imports deka from Caffaro S.P.A., Italy, at a rate of 300,000 to 500,000 lbs. per year, which corresponds to the manufacture of between 1 and 1.5 million pounds of deka wax, annually. At a cost of $0.70 per pound, (Lewis, W.H., Signicast Corp.) the annual volume of sales of deka wax should be in the range of $700,000 to $1 million per year.

All the wax manufacturers listed previously are believed to use imported PCTs as pattern wax fillers. Since the general properties of the deka and PCTs are similar, it is believed that the wax production and use

processes are similar also. Contacts with industry indicate that the volume of PCTs in wax is probably about the same as or greater than that of deka PCBs. Monsanto was the leading (and probably only) U.S. producer of PCTs prior to their voluntary cessation of production in 1972. Domestic production of PCTs by Monsanto through 1972 was as follows:

Year	Million of Pounds Aroclor 5460
1968	8.87
1969	11.60
1970	17.77
1971	20.21
1972	8.13

It is believed that a relatively small fraction of this production was used in casting waxes, probably on the order of a million or so pounds per year. Aroclor 5460 (Monsanto's trade name for their 60-percent-chlorine PCTs) was used primarily in adhesives, lubricants and paper coatings.

The current source of imported PCTs is believed to be Prodelec (France), which markets the material as Electrophenyl T-60 (60 percent chlorine), which, it should also be noted, may contain PCB contaminants.

In summary, the investment casting process, which is described more thoroughly in Sections 3.3.2.1 and 3.3.2.2, is a lost-wax casting process in which the shape to be cast is molded from wax and then invested or surrounded by a slurry of refractory ceramic. After the ceramic mold has hardened to an appropriate strength, the wax is melted or burned out leaving a molded cavity. Molten metal is then poured into the cavity, and cooled to form the casting.

The major losses of the virgin and used waxes occur during the dewaxing of the ceramic mold. As the ceramic mold is heated to remove the wax, a small portion of the wax diffuses into pores of the mold. Later, the mold with the trapped waxes is fired in a furnace to set the mold and remove the wax. Depending on furnace conditions, the decachlorobiphenyl in the wax may be burned or released to the atmosphere. At least several percent of that used is believed to be emitted via this route.

It is a normal practice by many foundries to recover the drained pattern wax and reuse it several times in sprues and gates. Purchased wax is apparently used an average of 2.5 times. During the dewaxing process the virgin wax (used to form the pattern) and the old wax (used to form the gates and sprues) are collected as one mixture. Little of the wax is destroyed in the process; therefore, it is considered probable that the investment casting foundries store or dispose of relatively large amounts of used PCB-containing wax.

3.3.2 Investment Casting Technologies

3.3.2.1 Principles of Investment Casting

The principles of investment casting are the same for both the solid mold and shell processes, but the method of forming the ceramic mold differs somewhat between the two. Both require a pattern, gating to a central sprue, removal of the pattern by melting, pouring metal into the cavity left by the melted pattern, removal of mold material from the cast cluster, and cutting of castings from the sprue.

The investment shell process is depicted in Figure 3.3.2.1-1.

The Pattern: The process begins with production of a one piece heat-disposable pattern. This pattern is usually made by injecting wax or plastic into a metal die. Dies range from simple, hand-operated single-cavity tools to fully automated multi-cavity devices, depending on production quantities and complexity of the parts to be cast.

A heat-disposable pattern is required for each unit being cast. Each pattern has the exact geometry of the required finished part, but they are made slightly larger in order to compensate for volumetric shrinkage during the pattern production stage and during solidification of the metal in the mold.

The pattern carries one or more gates which are usually located at the heaviest casting section. The gate has three functions:

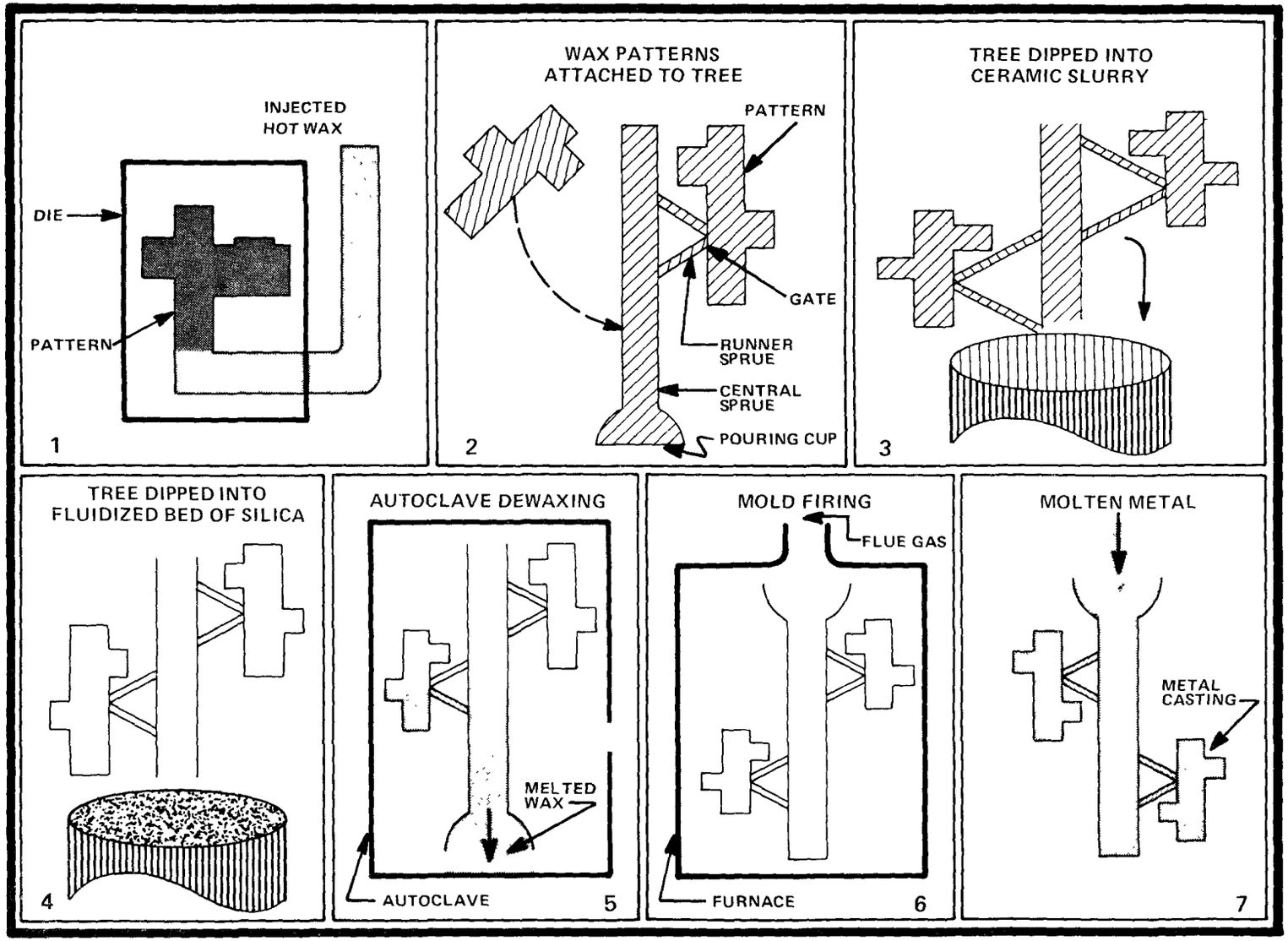

Figure 3.3.2.1-1. INVESTMENT SHELL PROCESS

(1) To attach patterns to the centrally-located sprue or runner, thus forming a tree-shaped cluster;

(2) To provide a passage for the draining of pattern wax once the mold is sufficiently hardened and has been heated; and

(3) To guide molten metal entering the mold cavity in the pouring operation.

Clustering: Patterns are fastened by the gate to one or more runners. The runners are attached to a pouring cup. All of these parts are usually made of wax. Patterns, runners and pouring cup comprise the cluster or tree upon which the ceramic mold is formed. The number of runners and their arrangement on the pouring cup may vary considerably, depending on alloy type and the size and configuration of the casting.

Molding: Up to the point of forming the ceramic mold, all foundries operate in essentially the same manner. After assembling the pattern to a tree, however, they may form the mold by either the investment flask process or the investment shall process.

Solid Mold or Investment Flask Process: There are two investment flask techniques, depending on the type of alloy to be poured. Ferrous alloys require highly refractory materials and binders. The entire cluster is dipped into a ceramic slurry, drained and stuccoed with fine ceramic sand. This step is usually repeated after the first coating has dried. This coated cluster is then placed in an open-end metal can (the flask) which is filled with a coarse slurry of ceramic backup material (investment). The investment hardens to comprise a green mold. When the flask with its contents are placed into an autoclave, the whole cluster (consisting of wax patterns, runners and sprues) melts and runs out through the pouring cup. The resulting monolithic mold contains cavities of the desired casting shape, with passages leading to them.

Nonferrous alloys are cast in ceramic molds bonded with plaster of paris. The entire tree (heat-disposable patterns, gates, runners, and pouring cup) is placed in an open-end metal flask without a first

ceramic coating. Investment slurry is poured into the flask, completely surrounding the cluster. Before the binder sets up, the flask is placed under vacuum to remove all air entrapped during mixing of the investment. When the investment becomes hard, patterns are melted out exactly as in ferrous casting.

The Investment Shell Process: This technique, as described in Figure 3.3.2.1-1, involves dipping the entire cluster into a ceramic slurry, draining it, then coating it with fine ceramic sand. After drying, the process is repeated several times, using progressively coarser grades of ceramic material, until a self-supporting shell has been formed. The thickness of the shell is usually between 3/16 and 5/8 inch.

The coated cluster is then placed in a steam autoclave where the wax melts and runs out through the gates, runners, and pouring cup. The resulting ceramic shell contains cavities of the desired casting shape, with passages leading to them.

Casting: Monolithic shell molds and solid molds must be fired to burn out the last traces of pattern material and to attain a degree of permeability before the molds can be filled with metal. In the case of solid molds, this heating has to proceed slowly, in a controlled cycle which stretches over 12 to 18 hours, to avoid cracking of the mold. The shell molds, made of ceramic material with an extremely low coefficient of expansion, can be placed immediately into a hot furnace. Because the shell molds have relatively thin walls, they can be fired and ready to pour after only a few hours in the furnaces.

The hot molds may rely on gravity alone to carry the molten metal into the intricacies of the mold, as is common in sand casting, or the process may use vacuum, pressure and/or centrifugal force in order to faithfully reproduce intricate details of the wax patterns.

Melting equipment employed depends on the alloy. For nonferrous alloys, gas fired or electric crucible furnaces are usually used. For ferrous alloys, high frequency induction furnaces and indirect arc furnaces are common.

Cleaning: After cooling, mold materials are removed from the casting cluster with vibrating equipment. Individual castings are usually removed from the cluster by means of cut-off wheels, and any remaining protrusions left by gates or runners are removed by belt-grinding. Generally, castings are sand blasted for smooth finish, then they are ready for such secondary operations as heat treating, straightening and machining.

Reclaiming of Pattern Waxes: The present cost of virgin pattern wax is approximately $.79/lb. In the future, it may be more economical to reclaim wax for use as pattern waxes, in addition to its present use in gates and runners. Furthermore, through a precipitation method, it is possible to remove fillers, including PCBs, from used wax in order to prepare unfilled wax.

Improvement of Investment Casting Processes: Several improvements in the investment casting techniques and procedures have been suggested by TRW Metals in Minerva, Ohio, which developed them through a two-year Air Force contract (AFML-TR-74-237). The areas of improvement were in wax pattern formation, mold production processes and metal pouring.

Wax pattern formation techniques were improved through simultaneous multiple injections of the gates and runners. The usual procedure requires separate steps.

Two suggestions for improvements were made for the mold production process: (1) elimination of the drying cycle between slurry dipping and sand coating, and (2) the use of microwave ovens to melt pattern wax out of the ceramic mold or shell.

The use of microwave dewaxers would have the advantage of reducing wax emissions in flue gas and drain condensates of autoclave ovens. However, microwave dewaxing may not eliminate wax losses occurring during mold firing as a result of wax trapped in the pores and cavities of the ceramic mold.

3.3.2.2 Foundry Process - Use of PCT and PCB Filled Waxes

A flow chart which typifies the use of PCBs and PCTs in investment casting is presented in Figure 3.3.2.2-1. PCB filled waxes are

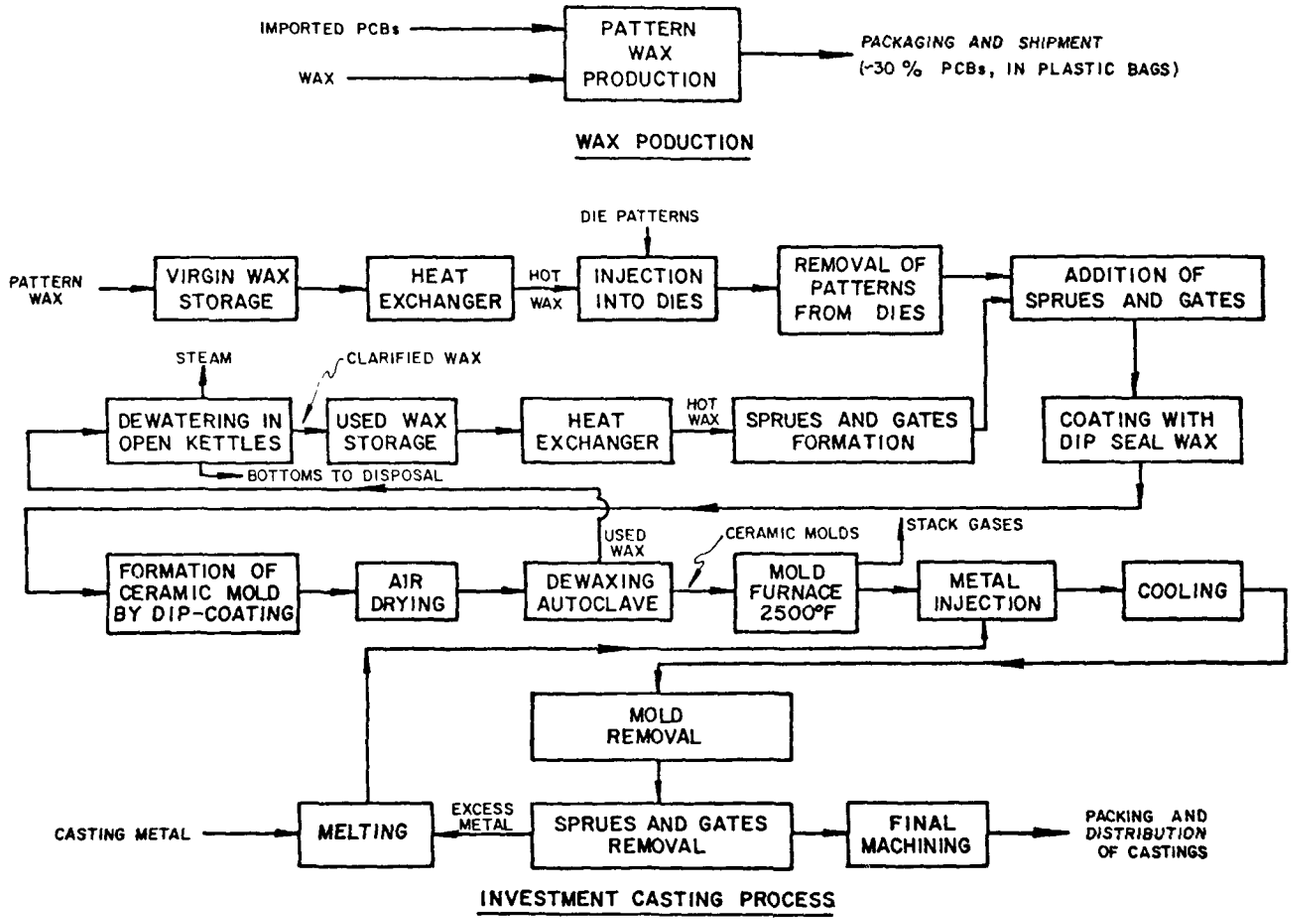

FIGURE 3.3.2.2-1
FLOW CHART OF PCBs USAGE IN INVESTMENT CASTING

purchased from wax manufacturers in bulk quantities of 10,000 or more pounds, sealed in plastic bags and contained in boxes for shipment. The received pattern wax is stored in a stockroom at the foundry until melted for the production of wax patterns. Once melted, the wax is injected into a pattern die where the wax is allowed to solidify. The pattern die is then disassembled and the wax pattern removed. Several wax patterns are produced before forming the tree. The formation of the tree entails attaching the individual wax patterns to the sprues and gates, and after the trees are assembled, the sprues are coated with a dip-seal wax to fill the voids on the rough sprue surfaces.

The next step in the process is the formation of the ceramic mold. This is accomplished by dip-coating the wax trees in a ceramic slurry and a fluidized bed of silica, and air drying of the coated tree. This process is repeated several times before the wax is melted out of the mold.

Dewaxing is accomplished by one of three techniques: steam autoclave, microwave oven, or flash firing in a mold furnace. Most foundries apparently use the autoclave technique, which involves subjecting the ceramic coated trees to steam until the wax within the mold is melted out, leaving the ceramic shell. The melted wax is either disposed of or reclaimed for use as sprues and gate wax. The new microwave technique involves heating the molds with microwave energy. Microwave units of 5- and 10-kilowatt output are commercially available for this application. The third technique of flash firing combines dewaxing and mold firing in one step. The ceramic coated wax trees are placed in a furnace where all the wax is removed from the tree by flash firing. Most of the wax is vaporized and leaves the furnace with the stack gases. It is not known how many facilities use flash firing.

If the foundry dewaxes the trees using autoclave or microwave techniques, the dewaxed ceramic molds must be fired in the mold furnace to strengthen the ceramic and to remove wax residues. The ceramic molds are raised to temperatures of between 1900 and 2000°F for approximately two hours. The vaporized wax residues leave the furnace with the stack gases. The foundries claim that only 1 to 2 percent of the wax remains in the molds before mold firing. This estimate of trapped or wall absorbed wax appears to be low for two reasons:

(1) The porosity of the ceramic mold can be as high as 30 percent, and

(2) Trapped waxes in the cavities of the pattern vary in amount, depending on the pattern's geometric configuration.

After firing, the ceramics are ready for metal pouring. The steps involved in pouring, and the subsequent recovery of the castings are evident in Figure 3.3.2.2-1, starting with metal pouring.

The high cost of pattern wax has stimulated foundries to reclaim used wax. For example, the PCB filled waxes sell for approximately 70 cents per pound. The average weight ratio between pattern wax and wax in sprues and gates is about 40:60. Therefore, reclaiming of used wax, especially for use in sprues and gates, ahs become a very important part of the foundry process.

Reclaiming involves placing the used wax in open kettles or tanks and heating it above the boiling point of water until all the water (from the steam autoclave) is eliminated. After dewatering, the reclaimed wax is reconstituted by adding paraffin and other additives until certain melting-point specifications are met. It is claimed that wax fillers are not added to adjust the filler content (Wurster, W., Consolidated Casting Corp.).

For those foundries which practice wax reclamation on their used wax, it is estimated that 5 to 10 percent of the wax is deliberately disposed of. The major source of the discarded wax is probably the dregs from the dewatering kettles.

3.3.2.3 Waste Streams

Idealized waste streams (containing PCBs and PCTs) leaving an investment casting foundry are shown in Figure 3.3.2.3-1. The broken lines within the process box in Figure 3.3.2.3-1 indicate potential PCB and PCT escape routes via air emissions from the foundry unit processes. The solid lines between the processes indicate the production routes of the waxes.

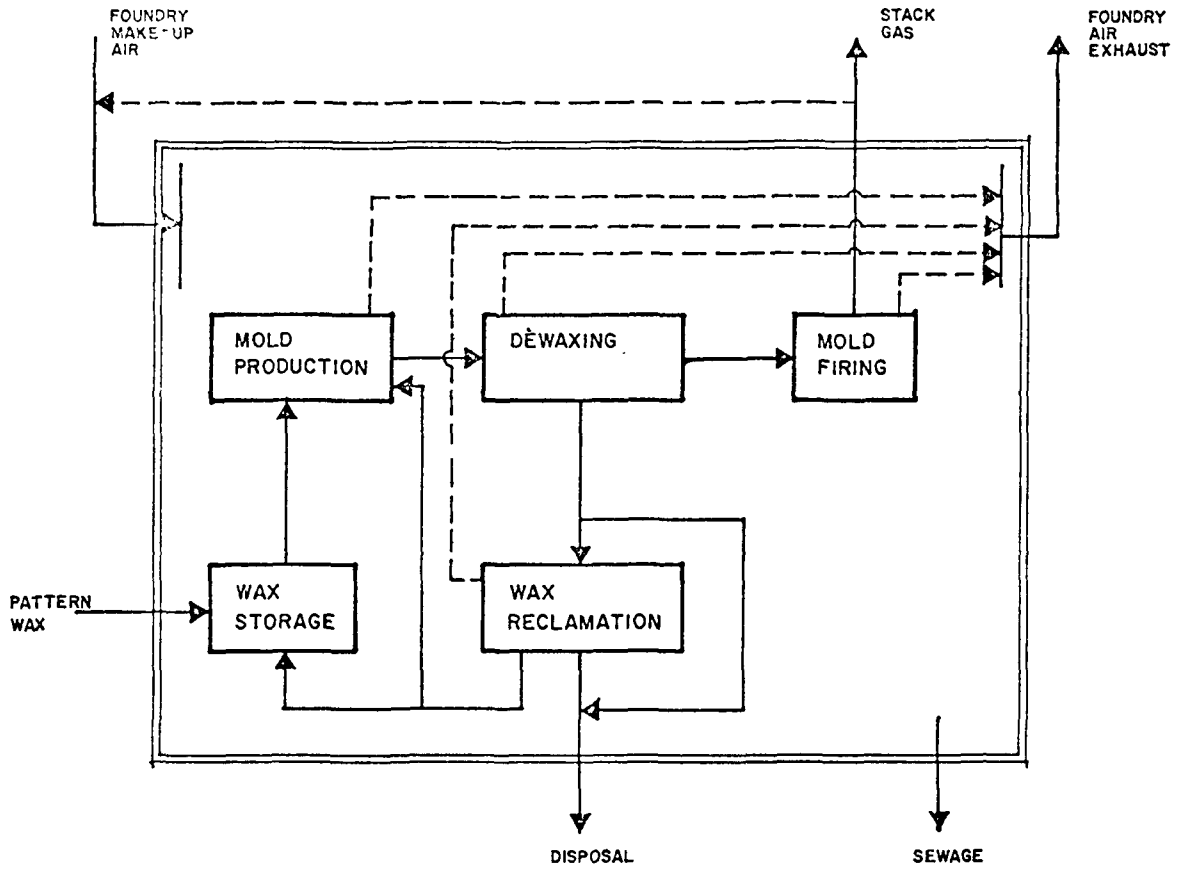

FIGURE 3.3.2.3-1

IDEALIZED FLOW CHART FOR AN INVESTMENT CASTING FOUNDRY, SHOWING WASTE STREAMS

The solid lines at the top of the figure indicate the two general ambient air escape routes, namely the stack gas from the mold firing furnace and the foundry exhaust air system. The two solid lines leaving the foundry (at the bottom of the figure) represent PCB and PCT escape routes: solid waste, which is usually sent to landfills, and raw sewage, which goes to municipal sewage treatment in most cases. The broken line outside the facility (at the top of the figure) indicates the possibility for inadvertent recycling of escaped PCBs or PCTs in stack gas or foundry air exhaust back into the foundry facility.

PCB-PCT-containing waxes enter the foundry as pattern wax packaged in plastic lined boxes which are stored until needed in the casting process. During mold production, when the wax is melted and injected into metal dies, wax fumes may escape. The type of dewaxing method employed by the foundries has a direct effect on the amount and mode of PCB or PCT loss to the environment, not only during dewaxing but also during process steps that follow. For example, the use of a steam autoclave, in addition to its own potential emission of PCBs or OCTs, also imparts moisture to the wax, and this water must be removed before the wax can be reused. Dewatering by evaporation at high temperature also likely contributes to air emissions. Flash firing, which combines mold firing and dewaxing into one step, probably emits high levels of PCBs or PCTs, and so far as is known, emission controls are not used.

Solid wastes can include unreclaimed used wax, excess reclaimed wax, bottoms from reclamations, and wastes from spills, equipment cleanout, etc. Although process water does not appear to be used, some plants may use cooling water. The steam autoclave appears to be a source of water vapor only.

3.3.3 Wax Manufacturing

To date, very little is known about the wax manufacturing process. However, it is known that in the process PCB or PCT compounds are added in powdered form to the wax base. Reduction of PCB or PCT particle size prior to mixing may be desired. Losses of dust to the environment by air routes from both size reduction and mixing operations would be expected.

3.3.4 Recommendations

The information presented herein represents the current knowledge of decachlorobiphenyl and polychlorinated terphenyls usage as wax fillers in the investment casting industry. This knowledge should be used as a basis for the development of an accurate assessment of the importance of PCB and PCT waste from the industry, and of the adequacy of available substitutes. Significant information gathering efforts would be required to establish a complete picture of the practices, processes and product of the investment casting foundries and wax manufacturers. Definition of the waste streams and emissions from the processes used would require sampling and analysis efforts in addition to the gathering of available process data and other information from the industry. The objectives of such a plan would necessarily include the following:

(1) Verification of the magnitude of PCB and PCT wax filler production and use;

(2) Development of detailed process descriptions, including waste streams, leading to a complete mass balance for the production and use processes (including significant variations);

(3) Definition of quantities and concentrations of waste streams, including waste form, abatement techniques, and ultimate disposal methods; and

(4) Evaluation of all reasonable alternatives to the use of PCBs and PCTs in casting.

A study plan to accomplish the above objectives was developed for OTS under Task III of this program (Contract 68-01-3259).

3.4 Secondary Fiber Recovery (Paper Recycling)

The secondary fiber recovery industry converts wastepaper from industrial, commercial, and municipal sources into reusable pulp, which is subsequently used to produce paper products, either as is or blended with virgin pulp. In the United States, there are approximately 230 paper mills

TABLE 3.4-1

PCB CONCENTRATIONS IN WISCONSIN PAPER PLANT EFFLUENTS

Plant	No. of Determinations	Average PCB Concentration (ppb)	PCB Discharged lbs./day	Aroclor Type
Badger Paper Mills	1	<.1	-	
Scott Paper				
Marinette	1	<.1	-	
Oconto Falls	1	<.1	-	
Shawano Paper	1	<.1	-	
John Strange Paper	1	4.00	.037	1242
Bergstrom Paper	4	28.40	1.25	1242
Kimberly Clark	1	0.28	.010	1242
Thilmany Paper	2	<.1	-	
Fort Howard Paper				
Mill Effluent	1	2.60	0.158	1242
Deinking	1	6.40	0.586	1242
Deinking & Mill Effluent	3	7.07	1.060	1242
American Can				
Sulfite Sewer	1	0.10	0.002	1242
Paper Mill Lagoon	1	0.14	.012	1242
Charmin Paper	1	0.14	.019	1242
Green Bay Packaging	1	0.45	0.006	1242

Note: Effluent flow data for these companies was determined at time of PCB sampling.

which produce pulp completely derived from wastepaper and 550 mills whose generated pulp contains secondary fiber (typically 10 to 15 percent).

Wastepaper stands third behind pulpwood and wastes from other forest products as a source of paper pulp in the United States. In 1974, fiber recovery mills removed almost 13 million tons of wastepaper from the nation's solid waste streams.

The effluent discharges from some of the secondary fiber mills has been documented by Kleinert to contain Aroclor 1242,[1] an apparent incidental PCB contaminant occurring in the pulp production process. Table 3.4-1 shows the PCB (as Aroclor 1242) concentrations and discharge rates for some paper recovery within the State of Wisconsin. These data were collected in 1975 by the Wisconsin Department of Natural Resources in an effort to survey PCB discharges.

The following subsections present a review of the historical usage of Aroclor 1242 in carbonless copy paper production and a brief description of a secondary fiber recovery process.

3.4.1 Historical Use of PCBs in the Paper Industry

Aroclor 1242 (which appears to be the predominant PCB found in mill effluents)[1] was used in the manufacture of carbonless copy paper sold by the Appleton Paper Division of the NCR Corporation during the period 1957 to 1971. Tables 3.4.1-1 through 3.4.1-3 provide data indicating: (1) The magnitude of Aroclor 1242 consumption in the manufacture of NCR carbonless paper; (2) Production quantities of NCR carbonless paper; and (3) The weight percent of Aroclor 1242 in carbonless paper.

From these tables, several significant facts are derived concerning the magnitude of PCB use in the manufacture of carbonless paper products. Some of these facts are:

(1) Approximately 44 million pounds of Aroclor 1242 were purchased (from Monsanto) for the manufacture of NCR carbonless paper;

TABLE 3.4.1-1

HISTORY OF AROCLOR 1242 CONSUMPTION
IN THE MANUFACTURE OF NCR CARBONLESS PAPER
FOR THE YEARS 1957 THROUGH 1971[1]

YEAR	(THOUSANDS OF POUNDS)
1957	587
1958	779
1959	1019
1960	1149
1961	1643
1962	1953
1963	2281
1964	2705
1965	3489
1966	4246
1967	4355
1968	5801
1969	6278
1970	6611
1971	1266
TOTAL - 1957 through 1971	44162

Note: [1] From data compiled and reported by Appleton Papers Division, NCR Corporation.

TABLE 3.4.1-2

HISTORY OF NCR CARBONLESS PAPER PRODUCTION
FOR THE YEARS 1957 THROUGH 1971

YEAR	ESTIMATED NCR CARBONLESS PAPER PRODUCTION - TONS
1957	10010
1958	13264
1959	17434
1960	20703
1961	25504
1962	29708
1963	34583
1964	41762
1965	51855
1966	60594
1967	69512
1968	83250
1969	87336
1970	91576
1971	88977
TOTAL,[1] 1957 through 1970	726068

Note: [1] Total excludes 1971 because use of Aroclor 1242 was discontinued in May, 1971 but estimated production of NCR carbonless paper is for full year.

TABLE 3.4.1-3

RATIO OF AROCLOR 1242 CONSUMPTION FOR CARBONLESS TO NCR CARBONLESS ESTIMATED PRODUCTION

Year	(A) Aroclor 1242 Consumption Thousands of Pounds (1)	(B) NCR Carbonless Estimated Production Thousands of Pounds	PCB Content $\frac{(A)}{(B)} \times 100$
1957	587	20020	2.9
1958	779	26528	2.9
1959	1019	34868	2.9
1960	1149	41406	2.8
1961	1643	51008	3.2
1962	1953	59416	3.3
1963	2281	69166	3.3
1964	2705	83524	3.2
1965	3489	103710	3.4
1966	4246	121188	3.5
1967	4355	139024	3.1
1968	5801	166500	3.5
1969	6278	174672	3.6
1970	6611	183152	3.6
1971	1266	177954	-
TOTAL (2) 1957 thru 1970	42896	1274182	Avg. 3.4%

Notes: (1) From data compiled and reported by Appleton Papers Division, NCR Corporation.

(2) Total excludes 1971 because use of Aroclor 1242 was discontinued in May, 1971 but estimated production of NCR carbonless paper is for full year.

(2) The average weight percent of Aroclor 1242 in carbonless paper was 3.4 percent;

(3) Of the total PCBs sold in the United States during 1957-1971, 6.3 percent were sold for the NCR carbonless paper application; and

(4) 28 percent of the total Aroclor 1242 sold by Monsanto for plasticizer applications was purchased for the manufacture of NCR carbonless paper.

Although NCR developed and sold the product, the actual manufacturing step whereby Aroclor 1242 was incorporated into the paper was performed by the Mead Corporation of Dayton, Ohio, who exclusively supplied carbonless paper to NCR. NCR, in turn, either used the supplied paper to manufacture ledger (business) forms or sold and distributed the carbonless paper to other form manufacturers. Aroclor 1242 is reported to be the only Aroclor type used in the production of carbonless paper. Specifically, Aroclor 1242 was used as a solvent for certain color reactants which were encapsulated into microspheres 10-20 microns in diameter and applied to one side of the paper during the coating process. The walls of the microspheres consisted of a gelatin-gum arobic formulation which was hardened by treatment with an aldehyde (such as formaldehyde). Since 1971, alkyl biphenyl compounds have been used in place of Aroclor 1242 as the dye carrier.

Very little is known about other uses of PCBs in the paper industry. Past usage of PCBs in paper coatings and adhesives appears likely, although the quantities used could not have been near the magnitude of PCB usage in the carbonless copy paper. Almost certainly PCBs were used in some of the inks, and possibly paper colorants, which can also be expected to occur in wastepaper. According to Monsanto, the favored Aroclor type used in inks was 1254, which contains most of the same isomers as 1242 but at different relative concentrations.

In addition, PCBs can enter the pulping process through contamination of intake water and in virgin pulp. Little is known about the magnitude of any of these sources, or even how much carbonless copy paper containing PCBs remains in files, etc. to enter the paper recycling processes in the future.

3.4.2 Fiber Recovery Mill Process

The following is a generalized description of the mill process for recovering paper fiber. Portions of this description was provided by the Bergstrom Paper Company in Neenah, Wisconsin. Figure 3.4.2-1 depicts the general process, up to the paper making section, in block form.

The fiber recovery process is a purification process wherein fibrous materials are deinked and separated from non-fibrous materials through controlled cleaning and mechanical treatment, followed by washing and cleaning. The color is next removed from the pulp by a multi-stage bleaching system accompanied by intermittent washing and centrifugal dewatering.

Pulping and Deinking: The fiber regeneration process starts with feeder crews loading the sorted paper onto a belt conveyor. The conveyor feeds a hydropulper, where wastepaper is pulped and deinked through the action of hot water, steam, caustic soda, and deinking chemicals. The breaking down of the paper stock is accomplished through a combination of mechanical and chemical treatment. At this point, larger metallic objects and other non-paper materials mixed with the wastepaper are collected into traps at the bottom of the pulper. The pulped stock leaves the hydropulper via extrusion through perforated plates, and goes to blending chests for additional retention time and agitation. From the blending chests the stock passes over a vacuum filter which is used for heat and chemical recovery. Much of the filtrate is recycled to the hydropulper; excess filtrate goes to treatment. The stock is then diluted and sent to centrifflers where small metallic particles such as pins and staples are removed.

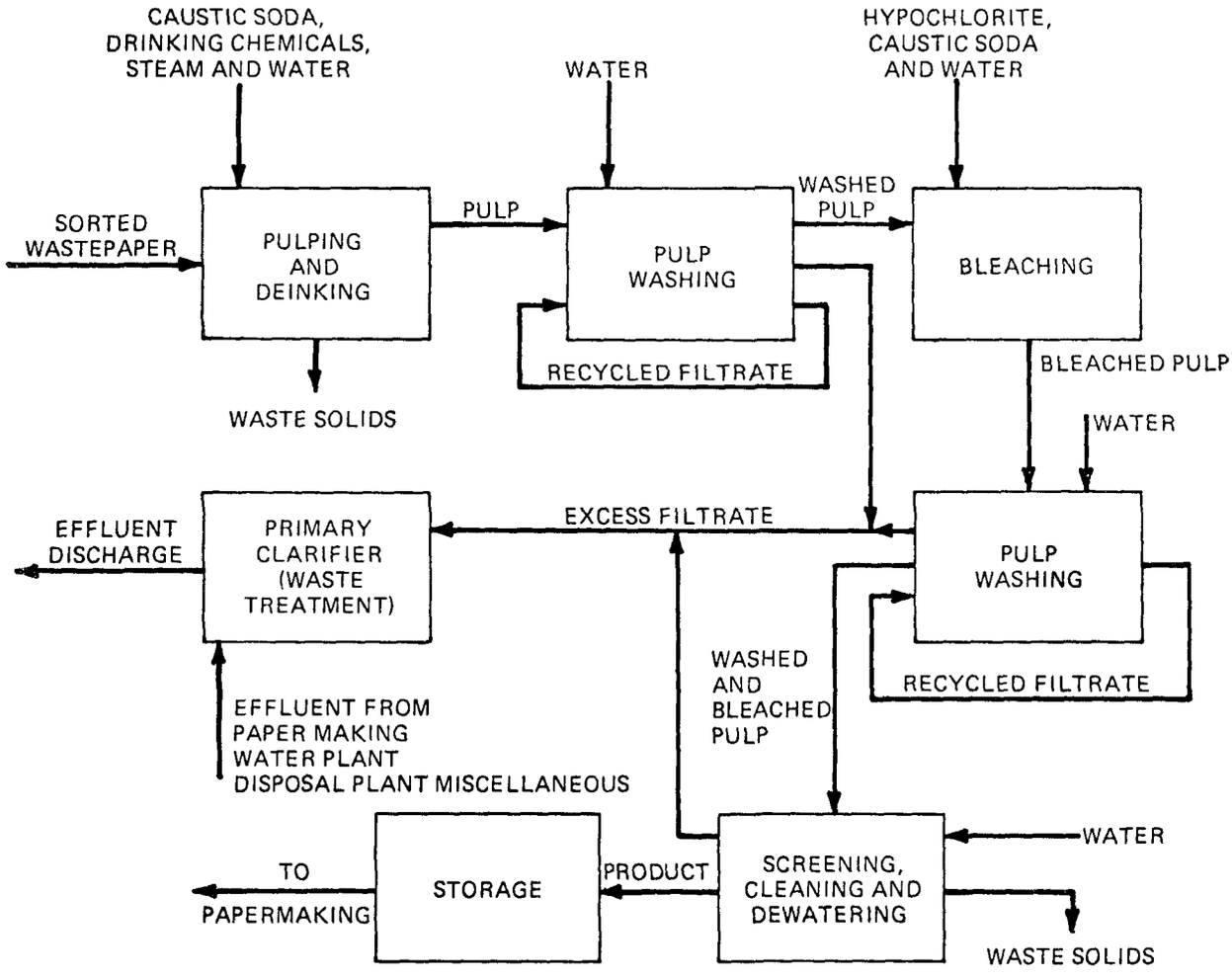

Figure 3.4.2-1. MILL FIBER RECOVERY PROCESS AND WATER EFFLUENTS

Pulpwashing: Accepted stock from the centrifflers goes on to the washing stage. Stock washing is accomplished in a four-stage counter-flow washing system. The first stage consists of cylinder washing, the second and third stages consist of sidehill washers, and the fourth stage is another cylinder washer. The cleanest water is used for dilution at the fourth stage, and the filtrate is fed to the preceding stage, finally reaching the first stage from which the filtrate is discharged for waste treatment.

Bleaching: Following washing, the stock goes to a three-stage bleachery. At the first stage the stock is chlorinated by sodium hypochlorite solution in a tower. After chlorination, the stock is washed on a vacuum filter. In the next stage the stock is treated with caustic soda and sodium hypochlorite. After retention in a second tower the stock is diluted and again washed on a vacuum filter. It is then treated again with sodium hypochlorite in a third tower.

Screening and Cleaning: After retention in the third tower, the bleached stock is diluted for the next cleaning process, which is a three-stage pressure screen system. Accepted stock from the first stage pressure screen goes to a five-stage centrifugal cleaner system for removal of small-sized heavy contaminants. Following this, the pulp is sent to a four-stage system of centrifugal cleaners for removal of lightweight contaminants.

After the cleaning, the stock goes to a final washing stage and is then dewatered (thickened) and stored in high density towers for paper making.

Flow Rates and Composition of Discharges: At Bergstrom the separate waterborne discharges from the paper and the paper making process are combined with other facility waste streams and directed to a central waste treatment system. Only the effluent from the primary clarifier of the waste treatment system is discharged to the environment. The average effluent flow rate for Bergstrom during 1975 was 3.9 million gallons per day. This volume rate is broken down as follows:

Process	Volume Rate to Waste Treatment Million Gallons/Day
Deinking	2.5
Paper Making	.9
Water Plant	.3
Disposal Plant and Miscellaneous	.2

Table 3.4.2-1 is a tabulation supplied by Bergstrom of the 1974 averages for various parameters in their raw water source and waste clarifier effluent. The average Aroclor 1242 concentration in the effluent was reported to be less than 8 ppb.

Recommendation (Paper Recycling): The information presented herein with regard to PCBs in paper recycling processes is based on a very limited study effort on the secondary fiber recovery industry. It is recommended that a more detailed study be performed of PCBs involvement in this industry. Important aspects which should be addressed include:

(1) Definition of paper recycling processes and the PCBs material balance therein (PCBs input versus PCBs content in effluent and product);

(2) Definition of past PCBs usage in paper and routes into recycled paper;

(3) Development of present distribution of PCBs originally used in paper;

(4) Determination of applicable effluent treatment methodology and associated cost estimates; and

(5) Projecting future contribution of PCBs to the environment from this industry.

TABLE 3.4.2-1

COMPOSITION OF RAW WATER AND CLARIFIER EFFLUENT (1974 DATA)
(Bergstrom Paper Co.)

	Raw Water	Clarifier Effluent
Aldrin, µg/l	<0.1	<0.4
Ammonia Nitrogen, mg/l	0.32	1.72
Arsenic, µg/l	<8	<8
Barium, µg/l	14	140
Beryllium, µg/l	<0.3	<5
Boron, µg/l	33	235
Cadmium, µg/l	<16	<16
Chloride, mg/l	10	482
Chlorine, mg/l	<0.5	<0.5
Chromium, µg/l	<4	26
Cobalt, µg/l	<14	14
Copper, µg/l	<5	78
Cyanide, mg/l	<0.005	0.12
Dieldrin, µg/l	<0.03	<0.03
Fecal Coliform Count/100 ml	4	<10
Fluoride, mg/l	0.46	0.48
Heptachlor, µg/l	<0.07	<0.5
Lead, µg/l	<42	85
Manganese, µg/l	10	50
Mercury, µg/l	0.7	0.5
Nickel, µg/l	<33	<33
Nitrate Nitrogen, mg/l	0.29	1.32
Nitrite Nitrogen, mg/l	<0.005	0.43
Kjeldahl Nitrogen, mg/l	0.82	19.0
Oils, Fats, Grease, mg/l	<1	26.4
Phenol, µg/l	4	26
Phosphorus, mg/l	0.11	0.57
PCBs, µg/l	<0.5	8.0 (1242)
Selenium, µg/l	<8	<8
Sulfate, mg/l	45	74
Sulfide, mg/l	<0.05	<0.05
Sulfite, mg/l	<2	<2
Suspended Solids, mg/l	<1	465
Thallium, µg/l	<1	<25
Zinc, µg/l	67	420
BOD_5, mg/l	1.1	665

3.5 Industrial Use of PCBs as Hydraulic and Heat Transfer Fluids

3.5.1 General

The use of PCBs in hydraulic and heat transfer systems increased rapidly during the 1950s and 1960s until, in 1970, the maximum sales by Monsanto for these uses, plus lubricants, were about 11.3 million pounds, or over 15 percent of the total 1970 reported domestic sales. Since 1971, Monsanto has not marketed PCBs for these uses, and although it should be noted that such usage of PCBs in deep mining equipment is expressly allowed by the OECD agreement to which the U.S. is party.

When PCBs sales for heat transfer and hydraulic uses were eliminated by Monsanto in 1971, the affected industries turned to substitutes or, in a very few cases, imported PCBs. Phosphate esters have found acceptance in many types of hydraulic systems where PCBs were formerly used. Glycols and other alcohols have replaced PCBs in some heat transfer systems, and there are a number of other substitutes used for this purpose (including other chlorinated hydrocarbons).

It is surmised that there are industrial concerns still using PCBs in these semi-closed systems. Hesse reported at the National Conference on PCBs in November, 1975 that a number of such users had been found in Michigan. Later contacts with these same firms indicated that all had voluntarily replaced the PCBs in their systems with substitute fluids. Very little work has been done to ascertain the magnitude of current PCBs usage for hydraulic and heat transfer purposes. Of the total reported Monsanto domestic sales of PCBs over the period 1957-71 for heat transfer fluids, hydraulic fluids, and lubricants, 81 million pounds, it seems reasonable that at least 95 percent have been replaced by substitutes or were in systems now obsolete. On this basis the maximum amount still in use would be on the order of four million pounds. A figure of two million pounds still in use is probably more accurate.

3.5.2 Use of Imported PCBs by Joy Manufacturing

Until recently, Joy Manufacturing Co. (Pittsburgh, Pa.) manufactured mining equipment which utilized a PCB motor coolant. Joy imports PCBs, as a mixture similar to Aroclor 1242, from France (Prodelec). Presently, the PCB type motors are no longer manufactured and have been replaced on new units by an air-cooled motor. However, PCB coolant fluids purchased from France are being used for servicing the old liquid coolant motors. Currently, there are approximately 1100 of the old motors in the field, each of which contains an estimated 3 - 4 gallons of PCB type coolant fluid. The operating time of these motors before complete overhaul is between 1 and 2 years. The major benefit derived from using the PCB type coolant was its fire retardant characteristics.

From the information received by representatives of Joy Manufacturing Company, and from available physical properties, it is estimated that between 40,000 and 60,000 pounds of the imported PCB type coolant fluid would be necessary to replace and "top off" the fluids in the old motors each year.

3.6 Recent Use of PCBs in Product Development Activities

Since the voluntary limitation on the sale of PCB compounds in the United States by Monsanto, small quantities of PCB compounds have been imported for new product development by at least one U.S. company. Such a use application, by E. I. duPont de Nemours and Co., Wilmington, Del., was for development work on a new polymer which is derived from the reaction of decachlorobiphenyl (deka) and Bisphenol A.

According to duPont representatives, they have imported small quantities of deka from Caffaro (Italy) for experimental purposes with the intent to develop a new product called NR-140 polymer. Approximately 2000 pounds of deka were imported in 1974; however, duPont did not import any deka in 1975. A decision was made not to commercialize the new product because of the uncertainties associated with the regulation of PCBs.

It is estimated by duPont that, if the new product had been commercialized, the annual purchase of deka would be in the range of 5-10 million pounds.

BIBLIOGRAPHY

1. Adduci, V.J., Letter to Mr. Russell Train with attachment entitled, "Statement of Electronic Industries Association to Environmental Protection Agency Concerning Proposed Toxic Pollutant Effluent Standards for Polychlorinated Biphenyls (PCB)", June 25, 1975.

2. Air-conditioning and Refrigeration Institute, Letter to Dr. C.H. Thompson, EPA, March 27, 1974.

3. AFML-TR-74-237, "Mfg. Methods for Production of Quality Superalloy Engine Parts", DDC Acquisition No. AD B0074 DOL.

4. Blatz, Philip S.D.,(E.I. duPont de Nemours and Company, Wilmington, Delaware), Personal communication, August 14, 1975.

5. Bolin, A.E., (Van Train Electric Corp.), Telephone communication, October 31, 1975.

6. Butner, J., (Sangamo Electric Co.), Personal communication, October 2, 1975.

7. Clark, R., (Universal Manufacturing Corp.), Telephone communication, November 24, 1975.

8. Colder, A.W., (Joy Manufacturing Co., Pittsburgh, Pa.), Personal communication, September 8, 1975.

9. Dornbush, W., (McGraw-Edison's Power System Div.), Personal communication, September 23, 1975.

10. Falk, Bernard H., (National Electrical Manufacturers Association), Letter to Dr. C. Hugh Thompson, EPA, March 25, 1974.

11. Farnsworth, George B., presented General Electric Testimony, FWPCA(307) Docket No. 1.

12. Gabel, H.E., Jr., (Niagara Transformer Corp.), Telephone communication, November 3, 1975.

13. Gunn, R., (H.K. Porter Co., Inc.), Telephone communication, November 3, 1975.

14. Hart, L.P., Jr.; Wright, Gary; Marquis, R.; and McKenzie, W.R., (General Electric Co.), Personal communication, October 22, 23, and November 11, 25, 1975.

15. Hesse, J., (Michigan Department of Natural Resources), paper presented in Chicago, EPA sponsored symposium on PCBs, November 19, 1975.

16. Hubbard, H.L., Encyclopedia of Chemical Technology, 1965, Vol. 5, pp 289-297.

17. Jard Company, Inc., Letter to the Consumer Products Safety Commission, May 2, 1974.

18. Johnsen, L.A., (Research-Cottrell Manufacturing Division), Personal communication, October 28, 1975.

19. Kleiner, S., Survey of Effluents in the State of Wisconsin in 1974 and 1975 by the Wisconsin Department of Natural Resources, Data presented in Chicago, EPA sponsored symposium on PCBs, November 19, 1975.

20. Kingsolver, W.S.,(McGraw-Edison Co.), Personal communication, December 15 & 26, 1975.

21. Leighton, I.W., "Demonstration Test Burn of DDT in General Electric's Liquid Injection Incinerator", U.S. EPA Region I, 1974.

22. Leisy, A.E. & Smull, Warren, (Monsanto Industrial Chemicals Co.) Personal communication, October 8, 1975.

23. Leisy, A.E., (Monsanto Industrial Chemicals Co.), Personal communication, November 6, 1975.

24. Lewis, W.H., (President, Signicast Corp., 9000 North 55th Street, Milwaukee, Wisc.), Statements made during lecture of Investment Casting Institute meeting, October 4, 1975.

25. Monsanto Industrial Co., Testimony, FWPCO(307) Docket No. 1, Presented by Mr. W.B. Papageorge.

26. National Industrial Pollution Control Council's Report, "The Use and Disposal of Electrical Insulating Liquids", June, 1971, p. 10.

27. Nelson, J.S., (General Electric), Letter to Dr. Martha Sager, with attachment entitled The Impact of a "Ban" on the Use of PCB in Capacitors, November 21, 1973.

28. Nelson, J.C., and Simon, E.L. (General Electric Company), Personal communication, September 4, 1975.

29. Oliver, O.M., (Standard Transformer Co.), Telephone communication, October 30, 1975.

30. Ortman, J., (Sprague Electric Co.), Telephone communication, November 20, 1975.

31. Papageorge, W.P., (Monsanto Industrial Chemicals Co.), Personal communication, August 27, 1975.

32. Pierle, A. Michael, (Monsanto Industrial Chemicals Co.), Polychlorinated Biphenyl Study, Personal communication, November 17, 1975.

33. Report on Power Transformer Troubles, 1969, Edison Electric Institute Publication No. 71-20 (1971).

34. Rollends, D., (Jard Corporation), Personal communication, October 2, 6, 1975 & January 15, 1976.

35. Rountree, William C., (Assistant General Counsel for Legislation, U.S. Dept. of Commerce), Letter to Dr. C. Hugh Thompson, EPA, March 26, 1974. (See discussion of PCB beginning on fourth page of attachment).

36. Salazer, A., (National Electrical Manufacturers Association (NEMA)), Personal communication, August 19, 1975.

37. Solomon, P., (Yates Manufacturing Co., Chicago, Illinois), Personal communication, September 9, 1975.

38. Stenger, R.A., "Monitoring of the General Electric Company", U.S. EPA Region II, Surveillance Analysis Div., Edison, N.J. September 26, 1975.

39. Thallner, K.A., (Helena Corporation), Telephone communication, October 31, 1975.

40. Thayer, J.H., (General Electric Co.), Personal communication, October 15, 1975.

41. Tuttle, C.; Teeple, P.L.; Hutzler, J.R.; & Butterworth, N., (Aerovox Industries, Inc.), Personal communication, September 25, 26, 1975.

42. Uptegraff, R.E., (R.E. Uptegraff Mfg. Co.), Telephone communication, November 3, 1975.

43. Vollmar, John R., (Louis T. Klauder and Associates), Letter to Dr. C. Hugh Thompson, EPA, March 22, 1974.

44. Wolsky, S.P., (P.R. Mallory & Co., Inc.), Telephone communication, November 21, 1975.

45. Wurster, W., (General Manager, Consolidated Casting Corp, 2425 Carolina St., Dallas, Texas), November 5, 1975.

SECTION VI

WASTE TREATMENT TECHNOLOGIES

1.0 INTRODUCTION

This section includes descriptions and discussions of existing and proposed technologies for the treatment of various types of wastes generated at PCB-producing and PCB-using plants. Also included are discussions of the presently available control technologies and technologies to be available within three years, plus technologies that will not be available for five or more years. The treatment and control costs included here have been developed and presented in the Task II report "Assessment of Wastewater Management, Treatment Technology, and Associated Costs for Abatement of PCBs Concentrations in Industrial Effluents", EPA Contract No. 68-01-3259, issued February 3, 1976.

1.1 Summary of Waste Management Problem Areas

Based upon detailed plant inspections and examinations of the processes in the production of PCBs and their use in capacitors and transformers, it has been determined that there are four major categories of wastes to be considered: waste liquid PCBs, PCBs in wastewater, PCB contaminated solid wastes, and airborne PCB emissions. It has also been determined that the characteristics of wastes in PCBs producing and using operations are similar enough that the same kinds of control and treatment technologies can be used.

1.1.1 Waste Liquid PCBs and Contaminated Scrap Oil

The users of dielectric materials have strict requirements for purity. Typical requirements are:

Inorganic chlorides	100 ppb maximum
Acidity, mg KOH/g	0.01 maximum
Water content	30 to 35 ppm maximum
Resistivity, 100°C, 500 V, 0.1 inch gap	100 to 500 x 10^9 ohm-cm, minimum
Dielectric strength, 25°C	35 kv minimum

When these or other properties cannot be met at the producer's facility, or by the user during transformer and capacitor filling operations, and it is found that the properties cannot be restored to askarel specifications by filtering and drying, disposal is required. The types of PCB contaminated liquids requiring disposal are:

1. PCBs contaminated with mineral oil
2. Mineral oil contaminated with PCBs
3. Nonreclaimable contaminated transformer askarels - arced askarels, askarels from manufacturing spills and sump accumulations, and askarels from holding basins, drip and drain pans, washings, sample jars and containers

1.1.2 PCBs in Wastewaters

The most likely pathways by which PCBs enter wastewater streams are operator wash-up after PCB handling and groundspills that mix into rainwater runoff. The significance of the first pathway can be illustrated by the realization that sixteen operators (or 4 operators 4 times a day) washing 1 ounce per day of PCB from their hands, account for one pound per day of PCB discharge.

Other wastewater categories discussed in the industrial characterization section of this report are:

1. Incinerator scrubber and quench water
2. Steam jet ejectors in vacuum distillation
3. Capacitor detergent wash solutions

1.1.3 PCB-Contaminated Solid Wastes

Solid wastes can be divided into two categories, burnable and non-burnable.

1.1.3.1 Burnable Solid Waste Materials Containing PCBs

Burnable wastes can be disposed of by high-temperature incineration. Such wastes consist of cellulosic materials, rags, pressboard, wood, sawdust, fuller's earth in bulk or in cloth bags, blotter papers, nitrile or cork gaskets, and similar materials.

1.1.3.2 Nonburnable Solid Waste Materials Containing, or Contaminated with PCBs

Nonburnable wastes may consist of capacitor and transformer internal components; steel, copper and aluminum components; filter units of the steel mesh construction type; and askarel drums and cans. Wastes of this type should be drained, with the liquid collected in drip pans, before disposal.

1.1.4 Air Emissions of PCBs

Although PCBs have very low vapor pressures they can be emitted to the atmosphere from the following operations and practices:

1. Aroclor scrubbing of air in PCBs manufacture
2. Vapor exhaust from steam jet ejectors
3. Evaporation from accidental spills
4. Evaporation from hot surfaces as part of flood-filling, inspection or holding operations
5. Vacuum pump exhausts
6. Evaporation from plant wastewater

1.2 Summary of Current PCBs Waste Control Practices

1.2.1 Control of Waste Liquid PCBs and Contaminated Scrap Oils

Plant visits have shown the major control methods to be incineration and disposal in sealed drums sent to sanitary landfills. Both incineration and landfilling may be carried out by the facility generating the waste, or the facility may engage a contractor.

Monsanto, the only U.S. producer of PCBs, has an incinerator (designed by John Zinc, Inc.) that vaporizes PCB liquids and sustains them in a turbulent burning gas at more than 2200°F for 2 seconds. One transformer manufacturer uses a John Zink designed incinerator that vaporizes PCBs and burns them at 1600 to 1800°F for 3 seconds or longer; this facility can also destroy PCBs soaked into transformer internal parts, but cannot routinely handle spent fuller's earth.

A number of PCB users send their solid wastes to the Rollins Environmental Services facility at Logan Township, N.J. Rollins uses a specially designed complex having a rotary kiln and a liquid turbulent burning chamber, both of which exhaust into an afterburner. Liquids can be burned in either the liquid chamber or the kiln; in the kiln liquid wastes can help to incinerate solids. The afterburner is 40 feet long, providing good residence time, and it is followed by a hot duct of about equal length that allows further combustion. Rollins claims a residence time of 3 to 4 seconds at a minimum temperature of about 2400°F at the aft end of the hot duct. The gases then go to a venturi scrubber and a tower scrubber for cooling and neutralization. For non-PCB incineration, Rollins sometimes lowers combustion temperature to 2200°F and residence time to 2 to 3 seconds. These residence times and temperatures were chosen experimentally to get 99.999-percent PCB destruction. This facility also handles all kinds of solids, as will be explained later, and it operates with EPA approval.

Another facility that incinerates liquid PCBs, with New York State EPA approval, is the Chemtrol Corp.'s facility at Model City, New York.

Liquids going to landfill are sealed in drums and added to landfills that have deep clay bases and impervious bulkheads to prevent leaching and seepage. However, incineration is the preferred disposal method for liquids.

1.2.2 Control of PCBs in Wastewaters

Our plant investigations have revealed that there are no methods being practiced whereby dissolved or otherwise bound PCBs in water streams are being either extracted from those streams or destroyed in them.

In the separation of PCBs from wastewaters, PCBs and sludges are removed from the bottom of water bodies, while oily phases are removed from the surfaces. However, nothing as yet is being done to treat the water layer itself; this is the area of PCB wastes control and treatment most needing development.

In general, waste streams contain between 1 ppb and 500 ppb of PCBs; most levels range between 10 and 50 ppb. PCB concentration of less than 1 ppb are undetectable.

Several plants use methods to keep the quantity of PCB contaminated wastewaters as small as possible. A few plants planned adsorption tests with carbons and other adsorbents, but there were no full-scale operations.

1.2.3 Control of Solid Wastes Contaminated with PCBs

The two current methods of disposal of solid or semi-solid PCBs wastes are incineration and landfill. Since we found only one PCB-using manufacturing facility with partial incineration capability, and Monsanto's incinerator cannot handle solids, all facilities except one must ship their solid wastes away from the plant site for either treatment. The one plant with partial capability can incinerate transformer internals to recover copper, and also can incinerate paper, rags, cardboard and the like. However, they do not as yet, incinerate fuller's earth, contaminated dirt, and similar materials. These are drummed and stored for later disposition.

Although there are a number of experimental facilities throughout the U.S. that could undboutedly incinerate all types of solid materials, one commercial venture has received the bulk of the work. Rollins Environmental Services can handle liquids incineration. For solids incineration of almost all types, the tumble burner or rotary kiln is used. When PCB contaminated materials are to be destroyed, the kiln temperature is brought up to 2200°F. All kinds of solids, packed in 47-gallon lined fiber drums and not posing unusual safety hazards are accepted. The current (late 1975) fee is about 7-1/2¢/pound. Additional charges of $3/fiber-drum handling, plus transportation charges, and possibly other charges for unusual problems, might be made.

Rollins will not accept impact sensitive, radioactive materials, or heavy metals concentrations of more than 25 ppm in the PCBs wastes. For wastes packed in steel drums, Rollins charges a $10/drum handling charge. As a general rule, anything packed according to the latest ICC tariff for hazardous materials will be accepted.

As with the liquids incineration, the gases from the kiln at 2200°F pass to the afterburner at a temperature of about 2500°F. Gases exit

the afterburner to a long hot duct that completes combustion and maintains the temperature at 2400°F until the gases enter the venturi scrubber, and thence to the lower scrubber and then the stack. Rollins has experimented with lower temperatures of 2000 to 2200°F and has not found destruction of PCBs to be at the 99.999 percent level desired. The residence time for gases at the 2400°F must be 3 to 4 seconds in a turbulent regime.

With regard to landfilling, one commercial venture has handled a large quantity of the PCB solid wastes under supervised conditions. The Chemtrol Pollution Services Co. of Model City, N.Y., operates a landfill located on the shore of Lake Ontario, under New York State EPA supervision, in a geologic setting claimed to be ideal for complete containment.

This "scientific landfill" is located entirely above ground on a bed of 40-feet-thick clay. Constructed on this foundation are cells for receipt of drummed solid wastes. The cells are lined with 30-mil chlorinated polyethylene film, and when loaded, are sealed, or covered with 5-feet of clay. At the bottom of each cell there is a sump, so that all leachate is collected and removed. That leachate is pH controlled, settled, filtered, and treated by flow through a carbon bed. The ground and surface waters are checked monthly for chemical content by an outside analytical laboratory. The facility has been approved for usage as a PCB disposal site by the New York State EPA, and thousands of drums have been landfilled over the last five years. An inventory is kept of the contents of each cell.

Chemtrol has the capability of converting semisolids and sludges to solids by using silicate cement powders and proprietary gelling agents.

Our review and analysis of the industrial situation for PCBs solid wastes control shows there are adequate options, at higher prices, for safe disposal and destruction. There is no longer a justification for open dumping to the ground or in lagoons.

1.2.4 Control of Air Emissions of PCBs

Most air emissions from ambient temperature PCBs are not controlled or collected for treatment in any way. PCB emissions generally are

collected as part of the overall plant air exhaust, which frequently is ducted to roof exhausts without treatment. Several plants used exhaust chilling and/ or fibrous or granular filtration of air; these methods offer the potential for PCB emission reduction.

The hot flood-filling of capacitors is followed by a cool down period before the filling tank is opened to the plant atmosphere. However, the temperature is still between 100 and 150°F; the area of the opening is several square meters, through which tank gases can reach the plant atmoshere. The tanks have individual exhaust ducts, but they lead directly to a roof exhaust system. The PCB-covered capacitors are held in an oven at 100 to 150°F to prevent any moisture condensation before sealing. Vapors from this storage are ducted to the roof and vented also.

In some cases, waste scrap oils containing PCBs are burned together with fuel oil in standard boiler systems. In these instances much of the PCB content is probably vaporized and exhausted to the air, rather than incinerated.

2.0 CANDIDATE PCBs WASTE TREATMENT TECHNOLOGIES CONSIDERED

As part of the examination phase of this study of alternative methods, we have contacted a number of equipment suppliers, developers, and researchers, in both the U.S. and elsewhere.

Key information was obtained on potential methods of PCBs removal from, and destruction in, wastewaters, by cooperative testing between Versar, Inc., and several materials suppliers and process developers. Their assistance is gratefully acknowledged.

We visited the U.S. producer, Monsanto, and several transformer and capacitor manufacturers to ascertain the nature, characteristics and quantities of plant effluents that now contain measureable amounts of PCBs, or might contain PCBs following a spill or other incident. This has provided the background for weighing the advantages and disadvantages of all available technology for potential application to PCBs wastewater treatment. We discussed and evaluated the control methods now used, possible shortcomings, and ideas for more optimized systems.

In order to find the new technology and approaches that might be forthcoming, we made a computer search of Chemical Abstracts from 1972 to the present, and focused on degradation, decomposition and waste treatment data. Searches were also made of the Lockheed Engineering Index, National Technical Information Service, and Predicasts for information on new developments.

The text reference used as a source of summarized data prior to 1972 was: The Chemistry of PCBs, by Hutzinger, Safe and Zitko, published in 1974 by CRC Press.

Candidate treatment technologies have been divided into the same four categories listed in Section 1.1. Also, as we evaluated technologies, they were placed into categories, as follows, indicating their level of development:

1. Demonstrated Full-Scale Treatments
2. Pilot-Scale Methods
3. Research Approaches to PCBs Removal or Destruction

Some treatment methods were designed for disposal of compounds similar to the PCBs, e.g., chlorinated hydrocarbons and other refractory organics.

The full-scale plant treatments are ready for application to PCB waste problems now. The pilot-scale methods are expected to take one to five years to be developed to the point where they will be determined suitable, or unsuitable, for plant-scale PCBs applications.

Methods currently under development are expected to take three years or more before being ready for plant-scale applications.

Section 2.5 contains a discussion of the applicability of various treatments to the zero discharge objective.

2.1 Treatment of Waste Liquid PCBs and Contaminated Scrap Oils

Only two kinds of treatment or disposal methods are considered suitable for waste liquid PCBs and contaminated scrap oils, and they are now being used. However, there are improvements and design features needed to prevent PCB transfer into the water, air or land.

2.1.1 Incineration

The standard configuration, long cylindrical steel combustion chamber, having a length to diameter ratio of between 4/1 and 8/1 and well insulated with high alumina refractory brick, is suitable as a primary chamber. Two injectors should be provided: one for a high-BTU gas or fuel oil, and one for the PCB waste liquid. Primary air or steam is provided to vaporize oils, and secondary air is added to complete combustion and provide excess air. These feeds should be made tangentially, or with adequate baffling to assure turbulent flow throughout, and to prevent hot or cold spots in the chamber. It is obvious that almost any residence time may be allowed for a gas flowing through a cylindrical chamber. However, there is a maximum residence time above which turbulence is assured throughout the chamber. Turbulence throughout is assured when wall temperatures are uniform in all parts of the chamber. Most fuel flames provide adiabatic combustion temperatures of about 3000°F. When the more endothermic PCBs are being destroyed, the flame can be rapidly cooled to 2200 to 2500°F; for the very high destruction efficiences desired, 99.999 percent or higher, this is the minimum temperature range required, for a residence time of 3 to 4 seconds. After combustion there should be allowance for afterburning, which may be accommodated in insulated ducts. These can be of sufficient length to assure total residence time of 3 to 4 seconds. Following the combustion phase there must be rapid cooling of the gases, usually by the injection of cold water from a peripheral ring of sprays or jets. Also, the cooling water should be neutralized so that hot hydrochloric acid contact with further components is obviated.

In some systems a high energy venturi scrubber is used to control particulates, if they are expected in the gas stream. In all systems the gas stream is then washed counter currently with water, or water plus neutralizing agent, in some form of a packed tower. Usually a demister is the last element contacted by the gas before it is exhausted through the stack.

The stack gas emissions and the scrubber effluent liquid should be monitored periodically for PCBs levels, and the incinerator should

have adequate automatic controls to prevent PCBs from being emitted undestroyed. The chief fail-safe control is a pyrometer that causes burner shutdown if the combustion chamber or duct temperature drops below about 2150°F. There are other controls that can warn if such an occurrence might take place. These flow rate controls on the primary and secondary feeds can be monitored so that low fuel flow, or high PCBs-to-fuel flow ratio can indicate a temperature drop. Inadequate air flow can also cause temperature decreases. All such parameters should be monitored, and adequate operator warnings provided. And, of course, to prevent destruction of the venturi scrubber sections, shutdown should automatically take place if cold water flow is ever insufficient.

2.1.2 Sanitary or Scientific Landfill

Sanitary landfilling is an alternative to incineration for PCB users who cannot justify incineration facilities just for PCBs, and who have no waste pickup service organization within reasonable distance. Landfills that will adequately contain PCBs should have all the features described in Section 1.3.3 above, plus there must be assurance that the liquid containers will be sealed and leak proof, and have long life in the landfill.

2.2 Treatment of Wastewaters Containing PCBs

Treatment of wastewaters containing PCBs has received very little attention in practice thus far. Our survey has found a variety of methods for reduction, and even for achieving "zero discharge", of PCBs in wastewaters.

2.2.1 Carbon Adsorption

Carbon adsorption is a well-known water purification and industrial product purification technique. The use of carbon adsorption is well-suited to removing PCBs from wastewater since it is most effective in removing high molecular weight, non-polar, relatively insoluble compounds from water. All these requirements are met by the PBCs.

As will be discussed later, Versar has conducted tests, in cooperation with carbon suppliers, demonstrating the relative effectiveness of

various activated carbon products. PCB concentrations on the order of 1 ppb were taken as a reasonable effluent objective.

The disadvantage of carbon adsorption is that once used, the carbon may have to undergo destruction by high temperature incineration rather than be regenerated, as is the usual practice. The great advantage of carbon treatment is that a wide spectrum of other toxic organics can simultaneously be effectively removed from water.

Carbon adsorption is currently being used in large-scale municipal water purification systems. Thus capital costs, operating costs and reliability factors are well-known. At the 68th Annual AIChE Meeting in November 1975, G. Strudgeon of Zurn Industries described design features for a 30-million-gallon-per-day carbon system to be built for municipal wastewater treatment at Garland, Texas. This system will cost $5 million, including carbon regeneration. Operating costs are expected to be $6,000 per day.

Although carbon adsorption is the only mechanism thus far proven effective in removing PCBs, three other carbon-based treatment techniques are under study: biodegradation, whereby bacteria-coated carbon particles break down pollutants in wastewater; catalytic action, wherein a very active surface holds pollutant molecules while other degradation or oxidation reactions take place; and chemical reaction, in which carbon is actually depleted as part of a chemical reaction that removes pollutants. The techniques were also discussed at the 68th Annual AIChE Meeting.

As an adjunct to this evaluation study, Versar conducted cooperative laboratory adsorption isotherm tests with Carborundum Company and ICI-US. These tests have extended the ranges of carbon adsorption data published by Calgon Corp. into higher and lower concentrations. Laboratory adsorption isotherm testing is a reliable technique for determining the feasibility of adsorption treatment for PCBs removal from wastewaters and specifically indicates:

1. The effluent levels of PCBs concentration obtainable by adsorption treatment
2. The weight of PCBs adsorbed at the concentrations being studied

On the other hand, the laboratory test does not determine the necessary contact time for granular carbon beds to effect the desired reduction. This determination is usually performed in small pilot carbon beds under hydraulic flow conditions.

Laboratory and pilot plant tests involving PCBs must be designed to prevent losses of PCBs. The root of the problem is the very low, parts per billion, solubility of PCBs in water. Examples of pathways of experimental loss are:

1. Evaporation to the air
2. Adsorption on a variety of solid surfaces and sediments

2.2.1.1 PCBs Adsorption Testing by Carborundum Company

Versar, Inc., together with Carborundum Co., conducted a preliminary study to determine the ability of an experimental, coal-based activated carbon in removing PCBs from water. This study also provided an analytical check in that both companies made electron-capture gas chromatograph analyses on the same samples, and there was close agreement on results.

The coal-based activated carbon had a surface area of 950 to 1050 square meters per gram. The iodine number was approximately the same as the surface area, indicating that almost all of the pores had a diameter greater than 10 to 15 Angstroms.

The control and test samples were filtered before extraction and gas chromatographic analysis. The removal of PCBs by solids, surfaces, filter media, and the like, was known and expected prior to these tests, thus a high PCB concentration in the filtered control and test samples was the target.

The PCB mixture used was Aroclor 1254. It was solubilized by methanol to give a 1000 ppm stock solution. This was diluted with distilled water to prepare 1000-ppb test solutions.

Table 2.2.1.1-1 presents the data. The filtered control level is considered the actual level the carbon was adsorbing, rather

TABLE 2.2.1.1-1

CARBORUNDUM CO. TESTS OF PCBs (AROCLOR 1254)
REMOVAL FROM WATER BY AN EXPERIMENTAL ACTIVATED CARBON

Prepared PCBs Concentration (ppb)		Carbon Dosage[1] (mg/l)	PCBs Conc. Before Treatment [Control Conc. After Filtering] (ppb)	Effluent PCB Conc. After Carbon Treatment (ppb)	Percent PCBs Removal
Control -	1000	--	160	--	--
Test	1000	1.0	160	59	63.1
Test	1000	2.0	160	20.6[2]	87.1
				22.0[3]	86.2
Test	1000	10.0	160	2.6[2]	98.4
				2.4[3]	98.5

NOTES: [1] Experimental material, coal-based, 950-1050 square meters/gram.
[2] Versar Inc.'s analysis.
[3] Carborundum Co.'s analysis.

than the prepared level. The filter removed 84 percent of PCBs in these test runs.

As shown in Table 2.2.1.1-1, the percent PCBs removed from a concentrated water solution (160 ppb) at low carbon dosages was quite good. During plant surveys we found PCBs concentrations in wastewater destined for river discharge to range from 50 to 500 ppb, so the 160-ppb concentration treated in this study was an intermediate value; it was, however, also the highest value treated in the cooperative studies under this program.

Carborundum Co. plans to continue this effort to determine the effects of other carbon dosage levels on various feed PCBs concentrations. The data given here are only considered preliminary.

2.2.1.2 PCBs Adsorption Testing by ICI-US

In a cooperative program with Versar, ICI-US performed preliminary adsorption tests to determine the ability of powdered carbon in removing Aroclor 1254 from water. Versar conducted all analytical tests for this program.

The Aroclor was solubilized with methanol so that a 1000-ppm concentration of Aroclor 1254 in water was achieved. Two types of granular activated carbon were tested: lignite base, and coal base. Both types were ground to a fine powder (90 percent through 325 mesh) before adsorption testing. Prior to grinding, the lignite-base and coal-base carbons had a surface area of about 650 square meters per gram and 1000 square meters per gram, respectively.

The test solutions were made up from distilled, deionized water to a volume of 1 liter. Four levels of Aroclor concentrations were treated: 10 ppb, 100 ppb, 500 ppb and 1000 ppb. Both the control and treated solutions were filtered before analysis. The great affinity of PCBs for all solid surfaces was not fully anticipated, during these tests. The filtration was uniform for all samples through 2.4-cm Reeve Angel fiberglass discs (Grade 934AH). As can be seen in Table 2.2.1.2-1, most of the PCBs were

TABLE 2.2.1.2-1

ICI-US TESTS OF PCBs (AROCLOR 1254) REMOVAL
FROM WATER BY TWO TYPES OF COMMERCIAL CARBONS

Prepared PCBs Concentration (ppb)	Carbon Type	Carbon Dosage (mg/l)	PCBs Conc. Before Treatment (Control Conc. After Filtering) (ppb)	Effluent PCBs Conc. (After Carbon Treatment) (ppb)	Percent PCBs Removal
Control, 10	--	--	1.07	--	--
Test, 10	Lignite[1]	4	1.07	0.177	83.5
Test, 10	Coal[2]	4	1.07	0.190	82.2
Control, 100	--	--	11.15	--	--
Test, 100	Lignite	30	11.15	0.213	98.1
Test, 100	Coal	30	11.15	0.111	99.0
Control, 500	--	--	5.32	--	--
Test, 500	Lignite	100	5.32	0.09	98.3
Test, 500	Coal	100	5.32	0.114	97.9
Control, 1000	--	--	37.5	--	--
Test, 1000	Lignite	100	37.5	0.32	99.2
Test, 1000	Coal	100	37.5	0.24	99.4

NOTES: [1] Larger pore, 650 square meters per gram.

[2] Smaller pore, 1000 square meters per gram.

removed in filtration. However, by using the filtered "control sample" as an approximation of the amount the filter removes from all feed samples, we can get a good preliminary estimate of the PCBs removal ability of the two kinds of commercial carbons at various wastewater pollutant levels, and at various carbon dosages.

The results of these laboratory tests indicated that powdered carbon was highly effective in removing PCBs from water at four levels from 1 to 40 ppb. There was not a great deal of difference between the effectiveness of the two carbons. The lignite carbon has relatively large pores and smaller surface area than the coal-based carbon. The lignite-based carbon simulates the activity of the coal-based carbon after the latter has a number of thermal regenerations. Thermal regeneration tends to increase the pore size, and lower the surface area of any given carbon. These kinds of activated carbons, however, tend to stabilize at about 550 square meters per gram, even after many regenerations.

The conclusion from these results is that carbon-adsorption can be effective in removing PCBs from wastewaters, even after many thermal regenerations. It is quite significant that in all these tests, the treated effluent PCBs levels ranged from 90 to 320 parts per trillion, which are well below the target maximum PCB level of 1 ppb.

Further testing is needed to get confirmatory isotherm data and column test data. In column tests, the granular form of carbon was used, and, therefore, some of the interior portions of the carbon were not as accessible as they would have been in the powdered form. Thus the tests with powdered carbon, given on a weight fraction basis (i.e., pounds PCBs removed per pound of carbon), yield the maximum weight fraction of PCBs that that can be removed in a scaled-up commercial system.

2.2.1.3 PCBs Adsorption Testing by Calgon Corp.

Adsorption isotherms were run on Aroclor 1242 and 1254. Stock solutions of each compound were prepared in acetone at 100 mg/l.

Filtrasorb$^{(R)}$ 300 (FS-300) activated carbon was used throughout. Carbon was added from a stock suspension of 1 g or 2 g of pulverized FS-300 per liter of distilled water.

Isotherms of Aroclor 1242 and 1254 were prepared by the following method. Exactly 1 ml of PCB solution was added to seven flasks, each containing slightly less than 1 liter of distilled water. Measured volumes of the 2 g/l carbon stock solution was added to each flask to give carbon concentrations of 0,2,5,10,25,50 and 100 mg/l. The total volume of each flask was 1000 ml. After four hours agitation on a wrist shaker, each solution was filtered through 0.45 micron millipore pads and stored prior to analysis in a refrigerator in quart amber glass bottles having Teflon-lines caps.

A nickel-63 electron capture gas chromatograph was used for analysis; all samples were extracted and concentrated approximately 100 times before analysis. The method is described in the 1971 EPA report, "Methods for Organic Pesticide Analysis in Water and Wastewater."

Table 2.2.1.3-1 shows the PCBs removal data, and gives comparative data for Aldrin. It appears that the Aroclors are removed as effectively as pesticides. Removal from the 50-ppb level to the 1-ppb level seems possible.

Figure 2.2.1.3-1 shows the Calgon data plotted to give the weight percent of PCBs that Filtrasorb-300 carbon can adsorb, at levels down to 1 ppb. As can be seen, the curves take a downward break at about 2 to 3 ppb, indicating that the weight of activated carbon required to remove a unit weight of PCBs is rising rapidly. If this kind of data is confirmed with larger-scale column testing, it would mean that removal of PCBs from water in the parts per trillion range is far more difficult than removal in the parts per billion range.

Also from the figure it can be seen that the initial concentrations (C_o) of the Aroclors were about 100 ppb. However, filtration before testing removed PCBs so that the starting concentrations for the tests were 45 and 49 ppb.

TABLE 2.2.1.3-1

RESULTS OF CALGON CORP. LABORATORY ISOTHERM TESTS FOR CARBON REMOVAL OF PCBs

Carbon Dosage (mg/l)	Residual (ppb)		
	Aroclor 1242	Aroclor 1254	Aldrin
Control	45	49	48
1.0	--	--	—
2.0	7.3	37	26
2.5	--	--	--
5.0	1.6	17	15
10.0	1.1	4.2	12
12.5	--	--	--
25.0	--	1.6	6.3
50.0	--	1.2	4.4

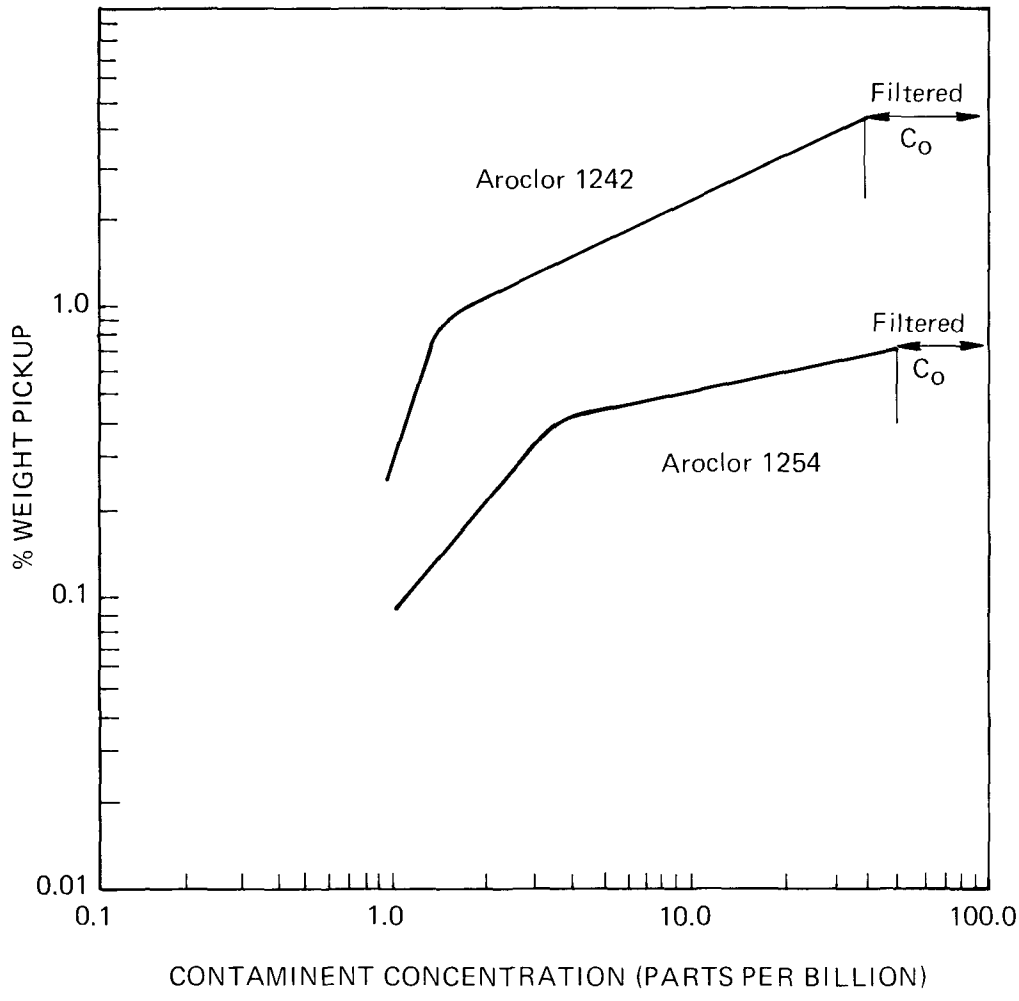

Figure 2.2.1.3-1. EQUILIBRIUM CARBON ADSORPTION OF PCB'S FROM WATER AT LOW CONCENTRATIONS (CALGON DATA)

Hager and Rizzo of Calgon Corp. have described the essential elements of full-scale adsorption systems in a paper presented to the EPA Technology Transfer Session on Treatment of Toxic Chemicals held in Atlanta on March 19, 1974. Each system is comprised of three basic functional components:

1. The adsorption treatment of the wastewater
2. The carbon reactivation equipment
3. The carbon/water transport arrangement

For PCBs, the practicality of reactivation must be determined.

2.2.1.3.1 Adsorption Treatment of Wastewater

The adsorbers hold the granular activated carbon beds through which the wastewater flows. They can be designed for pressure or gravity flow to achieve the desired contact time of the water with the carbon. Suspended solids and space limitations also must be considered in the adsorber configuration. Flow rates usually fall under 10 gpm per square foot of carbon bed surface area. Contact times for industrial wastewater mixtures usually are in excess of 60 minutes, which is about twice the time employed for purification of domestic sewage. When suspended solids are present, they can be filtered out by the carbon bed; this dual purpose of carbon beds can be usefully employed as long as the adsorbers are designed to accommodate periodic backwashing and bed-cleaning procedures such as air scour and surface wash. For PCBs service, minimum backwashing would be desirable since backwashing would create large quantities of concentrated wastewater needing incineration or treatment. Some settling and prefiltering would be required for optimum system performance.

A well designed water distribution system or underdrain system would insure good backwashing performances, as well as even distribution of water flow. Well established filtration design practices can be effectively employed in carbon bed systems. Carbon beds must be periodically removed via water slurry and obstructions to the flow of carbon from the adsorber should be avoided in adsorber design.

Carbon beds are normally in excess of 10 feet deep and usually fall into one of four basic configurations:

1. moving beds
2. beds in series
3. beds in parallel
4. expanded beds

The type of configuration selected depends on a number of variables; principal among them are total water flow, suspended solids, and degree of contaminant reduction desired.

2.2.1.3.2 Reactivation of the Granular Carbon

Thermal oxidation, using either multiple hearth furnaces or rotary kilns, is generally employed to reactivate the exhausted carbon. The size of the thermal reactivation equipment is based on the carbon exhaustion rate, i.e., pounds of carbon exhausted per thousand gallons of wastewater treated, and the weight of contaminant on the carbon. Excess capacity is designed into the thermal reactivation unit to allow for variances in carbon use rate due to changes in the wastewater flow and organic loading.

The exhausted granular activated carbon is heated to 1600 to 1800°F to effect volatilization and oxidation of the dissolved organic contaminants. Oxygen in the furnace is normally controlled at less than 1 percent to effect selective oxidation of contaminants over activated carbon. A 5 percent loss of activated carbon per reactivation cycle is an acceptable bench mark upon which to base granular carbon system economics. Particularly for the PCBs, which require an incineration temperature in excess of about 2200°F plus several seconds residence time, the reactivation equipment must include an afterburner. An air scrubber with HCl neutralization would be the last element of the reactivation train. Thus far, the regeneration of carbon used for PCBs adsorption has not been proved.

2.2.1.3.3 Carbon Transport

Granular spent carbon is usually transported between the adsorbers and the reactivation equipment by water slurry. Various pumping designs can be employed including centrifugal and diaphragm pumps as well as hydraulic or pneumatic pressure. The transport piping should include flush ports and wide radius bends. Typical loading is between 1 and 3 pounds of carbon per gallon of water, depending upon distance and elevation considerations.

2.2.1.3.4 Materials of Construction

Special consideration should be given to the selection of materials of construction with regard to corrosion and erosion.

1. Galvanic Corrosion - Any tendency toward galvanic corrosion due to water characteristics, such as conductivity and pH, will be enhanced in granular carbon beds. Mild steel tanks or adsorbers holding granular carbon under water should be lined. Tanks can also be constructed of cement or reinforced synthetic resins or plastics.

Carbon-in-water slurry piping, which experiences only periodic exposure, is usually exempted from special corrosion considerations.

2. Erosion - Periodic replacement of the carbon beds can cause lining failures at exit ports in carbon tanks and adsorbers. Special grades of stainless steel are usually employed for such wear points.

2.2.1.4 Carbon Regeneration Alternatives - Wet Catalytic Oxidation

For small installations, it might prove feasible to dispose of spent carbon by incineration. Carbon supply companies also offer spent carbon removal services and off-site regeneration.

However, there is a new wastewater treatment technique which might be applicable to carbon regeneration, namely wet catalytic

oxidation. Several laboratory studies in wet catalytic oxidation are described in Appendix C. Lockheed Missiles and Space Co. (Waste Treatment Systems Section) of Sunnyvale, California, announced in January, 1976, that they have a process ready for pilot plant evaluation and commercial scale-up.

In a preliminary look at the PCBs destruction potential of wet catalytic oxidation, a wastewater sample from an unnamed user of PCBs was subjected to treatment. The PCB mixture approximated Aroclor 1221 most closely, and was very concentrated to 5 ppm in the wastewater sample. Since 5 ppm is much higher than that Aroclor's solubility in pure water, it is believed that solubilizing agents or particulates were carrying most of the PCBs. Within 20 minutes of treatment time, however, about 90 percent of the PCBs had been destroyed, and no large quantities of reaction products were detected. However, this is just one data point and confirmation is needed. The test reactor was a continuously stirred batch system, with air continuously sparged in. The test conditions used were: reactor pressure, 1500 psig; temperature, 550°F; catalyst concentration, 0.5 gram; and reactor volume, 1.5 liters.

The proposed use of wet catalytic oxidation is for carbon regeneration while in spent water slurry form.

Since the capital and operating costs of the catalytic system are tied to the hydraulic load, it might be practical to trap PCBs with carbon in wastewater, and then treat the carbon slurry by catalytic oxidation to destroy the PCBs. In this way, PCBs would be removed from the wastewater by the highly efficient carbon adsorption method, while the volume handled by the catalytic system would be greatly reduced.

Feasibility testing for regeneration of activated carbon by catalytic oxidation is needed. The activated carbon industry has long sought alternatives to thermal regeneration of carbon, because of the loss of carbon by oxidation. With solvent regeneration, or acid or base treatment, the first regeneration only produces about 40 percent of the active surface, which then usually decreases to 30 percent after several more treatments.

Such degradation is unacceptable. Thus the questions to be answered are: a) Can catalytic oxidation destroy adsorbed PCBs on carbon, converting them to CO_2, H_2O and HCl? b) Will the regenerated carbon have, say, 90 to 95 percent of its original activity? c) Can the process be operated economically? The last question must take into account the necessary operation pressures (500 to 2000 psi), operating temperatures (300 to 650°F), source of oxygen (air, O_2 or ozone), type and lifetime of catalyst, residence time, and materials of construction, among other variables.

2.2.1.5 Further Applications Data

ICI-US provides an excellent booklet entitled "A Symposium on Activated Carbon", providing considerable detail on applications. ICI also provides information on special graphical procedures helpful in the scale-up from isotherm to column testing.

2.2.2 Ultraviolet-Assisted Ozonation

Both UV radiation, and ozone, separately, have been used in water purification for some time. But only in the last five years or so has the synergism of the combination been appreciated in the destruction of organics in water.

Two commercial organizations, Houston Research, Inc., of Houston, Texas, and Westgate Research Corp. of Marina Del Rey, California, are engaged in development of UV-assisted (or catalyzed) ozone oxidation of refractory organics. Both organizations have cooperated in preliminary tests of PCBs destruction, and the method has shown great promise as a large-scale, economic water treatment method. The companies are working mostly with 253.7 nanometer, near-UV, radiation, but they plan to investigate far-UV mercury radiation at 184.5 nm.

It is of particular significance that these methods promise destruction of hydrocarbon organics completely to CO_2 and water. Thus they are likely candidates for zero discharge and total recycle systems.

Related to this is the work of Lawrence at Environment Canada (Burlington, Ontario), who is studying the use of near-UV radiation (about

365 nm), available from sunlight, in conjunction with titania or alumina photocatalysts rather than the combination of UV and ozone. The ultraviolet region extends to 380 nm, and then blends into visible violet. Studies using visible light are described further below.

UV radiation is generally provided by commercially available tubes, which when operated at low power (and low pressure in the emitting tube) are quite efficient in transferring UV radiation to water. The range of effectiveness is quite short, probably of the order of a few inches maximum, because UV transmissibility in water is poor, and is degraded further by even small amounts of particulate matter.

Ozone is sparged into the reactor, and vigorous stirring is provided until increasing turbulence or mixing power input does not further increase reaction rate.

Various kinds of efficiency values are given to rate different systems, flows, arrangements, etc. For overall efficiency, the units of measure are total organic carbon removed per watt-second of UV input, or per gram of ozone introduced.

Since ozone generation is expensive, work is directed toward optimum use of the ozone introduced. The cost is almost completely that of the electric power used in the silent discharge tube method of making ozone from air. And, of course, UV generation is also an electric power cost factor.

The following subsections discuss UV radiation and its molecular interactions, the photodegradation of PCBs, and UV-assisted ozonation experiments with PCBs.

2.2.2.1 Molecular Responses to Ultraviolet Energy

Energy absorbed in the ultraviolet region (10 to 380 nm) causes electronic transitions within molecules. The principal characteristics of an absorption band are its wavelength and intensity. The wavelength of maximum absorption (λ max) corresponds to the wavelength of radiation having energy equal to that required for an electronic transition. A molar

absorptivity at maximum absorption (E max) of 10,000 calories per mole or greater is regarded as high intensity absorption. Low intensity absorption is considered an E max of less than 1,000 calories per mole; biphenyl in alcohol at 250 nm has an E max of 18,000, and in hexane at 246 nm, an E max of 20,000.

This would seem to indicate that the basic structure of the PCBs would be readily activated by a mercury lamp generating 253.7-nm radiation. However, this absorption will be modified by the number of chlorine atoms attached to the biphenyl groups. If at any point in the destruction of PCBs, saturated hydrocarbons are formed, they will be unresponsive to 253.7-nm radiation. Saturated hydrocarbons contain sigma electrons exclusively. Since the energy required to bring about ionization of the sigma bonds is of the order of 185 kcal per mole it is only available in the far ultraviolet, below 200 nm. Single carbon-carbon and carbon-chlorine bonds have about the same high bond energy, and are similarly resistant to rupture; however, there is a mercury emission at about 185 nm, which should be capable of activating those bonds, thus making them highly reactive in the presence of oxidizers such as ozone.

Thus it appears possible to produce the excited states in PCB molecules necessary to make them highly receptive to oxidation. Since ozone is a powerful oxidizing agent, and it too is excited in the same regions making it even more effective, the possibilities for a wide range of oxidations are present. This would seem to make complete destruction of PCBs to CO_2, water and HCl feasible.

2.2.2.2 Photodegradation of PCBs

Because of the strength of the C-Cl bond, it has heretofore been assumed that little photochemical cleavage occurs. Further, in the photochemical breakdown of DDT and related compounds, cleavage of the aromatic C-Cl bond is usually not involved. However, Safe and Hutzinger reported in Nature in 1971, that hexachlorobiphenyl photolyzed readily in organic solvents when irradiated at 310 nm. The resultant products are formed by stepwise loss

of chlorine, rearrangement, and condensation. Other researchers have found that certain pure chlorobiphenyls and PCB mixtures can be decomposed by laboratory UV sources and by sunlight, over long time periods.

The wavelength of the UV radiation appears critical to photochemical decomposition. Low-pressure mercury lamps emitting 254 nm seem to be several times as effective as the UV from sunlight, which is greater than 295 nm. Studies have been carried out in organic solvents and water, and in both liquid and vapor states.

Much of the past work has been on organic solvent solutions of PCBs in order to have high working concentrations. Vapor phase studies have been run to simulate treatment of atmospheric emissions in environmental studies.

Reductive dechlorination, the main photoreaction of chlorobiphenyls, is faster in hydroxylic solvents such as methanol and isopropanol. Even chlorobenzene loses chlorine rapidly on irradiation in isopropanol. Complete dechlorination of a PCB mixture has been observed in 15 minutes in an alkaline isopropanol solution, using a mercury lamp (Anon., Chemical Marketing Reporter, Nov. 6, 1972, page 22). Biphenyl and sodium chloride were identified in the reaction mixture.

Photosensitizers can increase the decomposition rates. Tryptophan, diethylaniline, benzophenone and triphenylene sensitized the photoreaction of dichlorobiphenyl. The reaction was quenched by n-hexyl mercaptan and di-n-butyl sulfide. Experiments in water solution have been hampered by adsorption of the PCBs on the walls of reaction containers, particularly ones made of glass.

Attempts have been made to use surfactants to keep the PCBs in suspension. Adsorption on such solids as calcium carbonate, silica, and soils, in water suspension, has been tested as an aid to photolysis. However, UV radiation will not penetrate deeply into solids, so adsorbed PCB must be kept close to the surface.

2.2.2.3 Experimental Factors in UV-Assisted Ozone Oxidation of PCBs

For several decades the advantages of ultraviolet radiation in the sterilization of aqueous and dry media have been known. Likewise, the powerful sterilizing, oxidizing effects of ozone have been known. Only with the relatively recent advent of requirements for removing refractory organics from water, and the ability to detect these organics in parts per trillion and even lower concentrations, has the need for powerful oxidizing capability been felt. It was quite natural to combine the two effects into a single treatment or staged treatments, with the result being a strong synergism in many cases.

Enough data has now accumulated to show that UV/ozone wastewater treatment is a powerful method for removal of refractory organics. It has the potential of removing organics to an effective zero discharge level. However, as the decrease in very small concentrations becomes exponential with time, the residence time required in UV/ozone treatment equipment becomes a critical factor. The following variables have been identified as affecting residence time:

1. Molecular structure of the organic
2. Concentration
3. UV transmissivity of the wastewater
4. UV intensity
5. UV wavelength
6. Ozone concentration
7. Liquid turbulence and gas-liquid contact (transfer coefficients)
8. pH
9. Temperature

The following subsections present experimental findings about the relative significance of these variables.

2.2.2.4 Destruction of PCBs and Refractory Organics at Houston Research, Inc.

2.2.2.4.1 PCB Destruction Data

In preliminary experimentation on the feasibility of PCBs destruction, a high pressure 650-watt mercury tube generating 253.7-nm radiation was used in a 21-liter reactor. Figure 2.2.2.4.1-1 shows the arrangement for a smaller reactor. Oxygen, with an ozone concentration of 2 percent, was sparged in at 3 liters per minute. This was felt to be excess ozone usage, but a good starting point for tests. A 1000-ppm solution of Aroclor 1254 in methanol was used to get a 514-ppb solution of Aroclor 1254 in water. Otherwise the solubility of Aroclor 1254, which is about 50 percent pentachlorobiphenyl, is only 12 ppb in water. It was theorized that significant destruction of this compound would forecast even greater destruction of the other Aroclors now produced, which are all less chlorinated and more soluble in water.

Figure 2.2.2.4.1-2 is a plot of the normalized residual concentration of Aroclor versus time of UV-assisted ozonation. It can be seen that in 1 hour about 2/3 of the PCBs had been decomposed; and in 3 hours, only about 7 percent of the original PCBs remained.

2.2.2.4.2 Operating Data Obtained from Refractory Organics Tests

Houston Research has been studying ozonation for water purification for more than four years. Comparison tests have shown that the addition of UV radiation enhances the reaction rate by 10 to 100 fold. Further it was found that, for the most refractory compound they had tested prior to the PCBs, acetic acid, there was essentially no reaction without UV assistance. However, with UV radiation, the oxidation proceeds rapidly at room temperature.

Figure 2.2.2.4.2-1 shows the effects of UV and temperature on acetic acid destruction. The ordinate is the fraction of total organic carbon remaining, showing that for the 30°C or 50°C tests, with

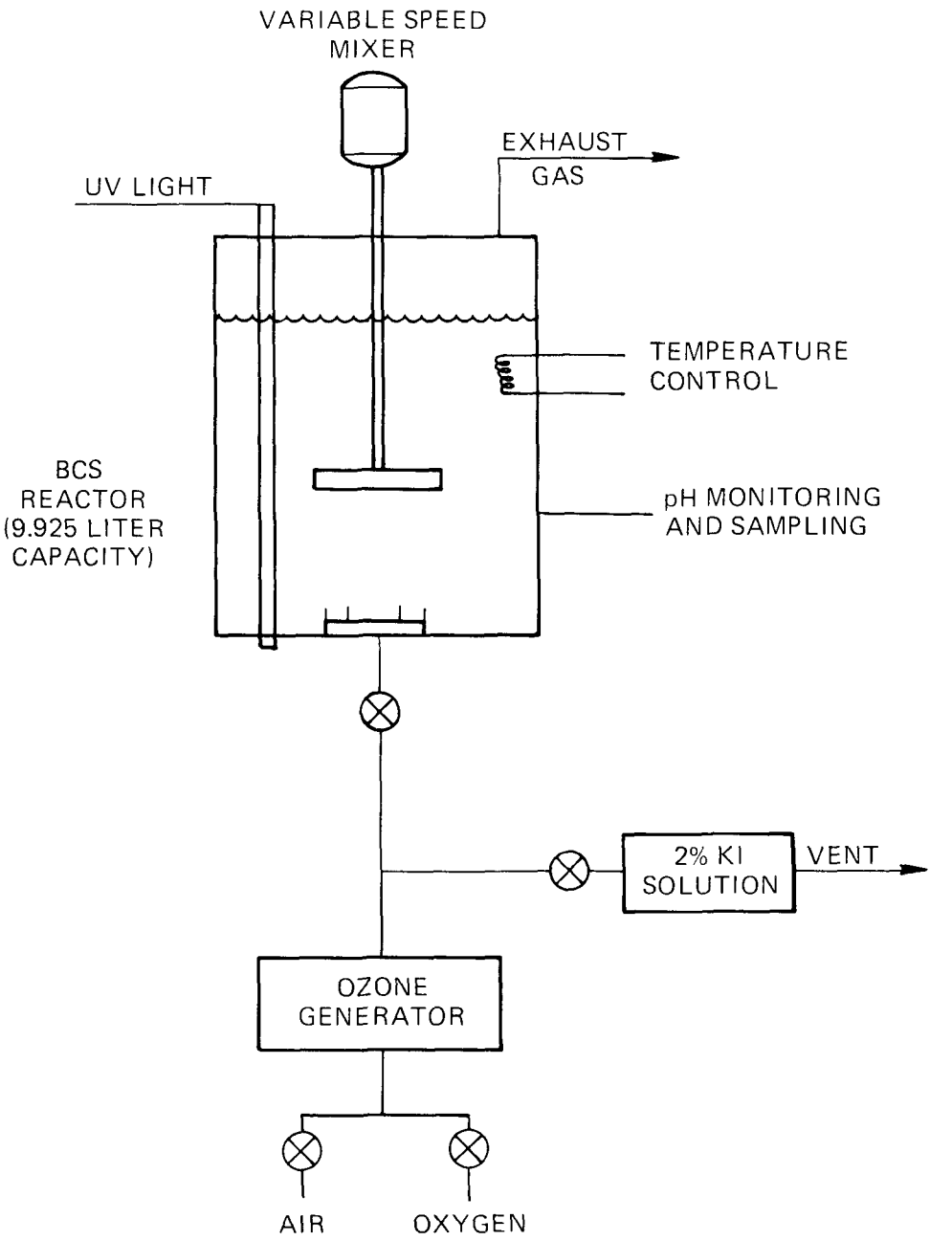

Figure 2.2.2.4.1-1. LAB SCALE APPARATUS FOR REACTION AND MASS TRANSFER STUDIES AT HOUSTON RESEARCH, INC.

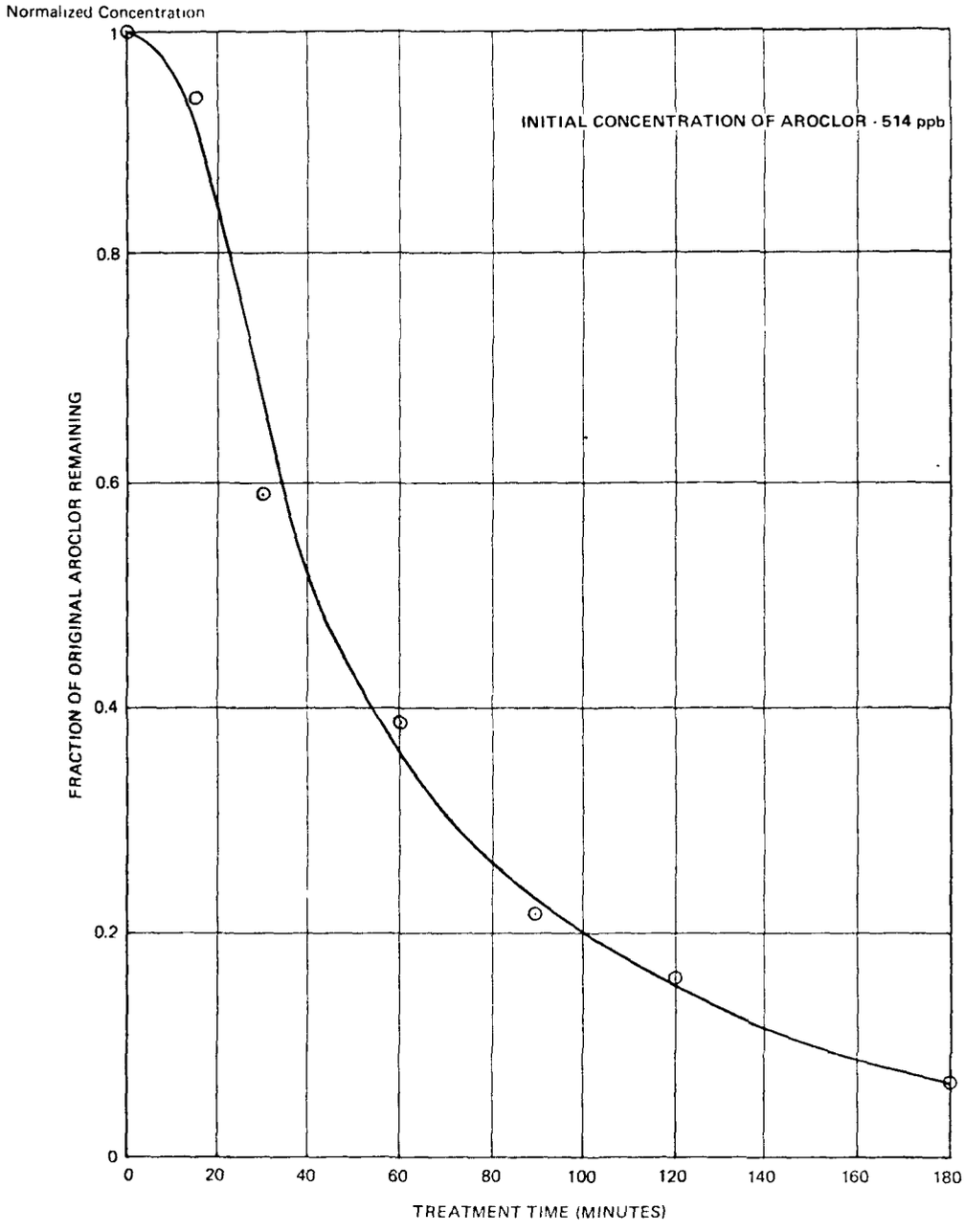

Figure 2.2.2.4.1-2 AROCLOR 1254 DESTRUCTION BY UV-ASSISTED OZONATION

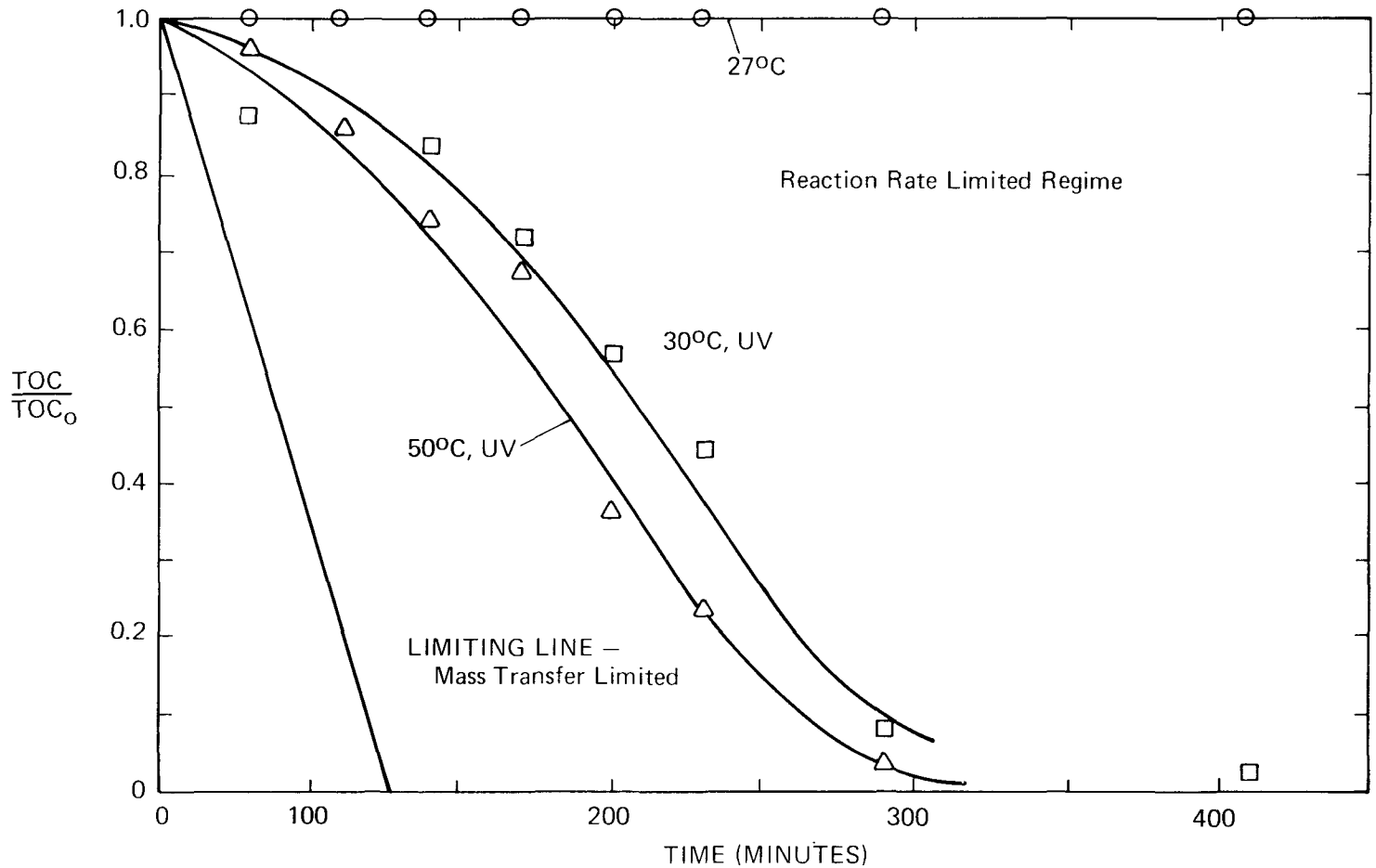

Figure 2.2.2.4.2-1. OZONE OXIDATION OF ACETIC ACID, EFFECT OF UV AND TEMPERATURE (INITIAL CH_3COOH - 105 mg/1, O_3(I) = 3.5 mg/1)

UV, there is nearly complete destruction to CO_2 and water within 4 to 5 hours The fact that the curves are displaced to the right of the mass transfer limiting line shows that some chemical reaction rate improvement can be sought.

Figure 2.2.2.4.2-2 shows the oxidation improvement achieved by doubling the UV power input, with near constant temperature. Further description may be found in: "Ozone/UV Process Effective Wastewater Treatment", by Prengle, Mauk, Legan and Hewes, in Hydrocarbon Processing, October, 1975.

These are a sampling of the kinds of optimization experiments that must be run with the PCB oxidation system to obtain good economy of design and efficiency of operation.

2.2.2.5 Destruction of PCBs and Refractory Organics at Westgate Research Corp.

2.2.2.5.1 PCBs Destruction Data

Cooperative testing and research between Versar, Inc., and Westgate Research, Inc., determined the effectiveness of Westgate's UV-assisted ozonation process in destroying PCBs. The following experimental conditions were used in the treatment of synthetic wastewaters containing Aroclors 1254 and 1016:

Reactor volume = 3 liters

Reaction time = 4 hours (excess time used to give best chance of destruction)

UV Source = one 43-watt, low-pressure Hg lamp operating at 253.7 nm

Reactor type = vertical, cylindrical, 18 inch long, 3 inch diameter (UV path length = 2 inches)

Pressure = atmospheric

Temperature = 23°C

pH = 6.2

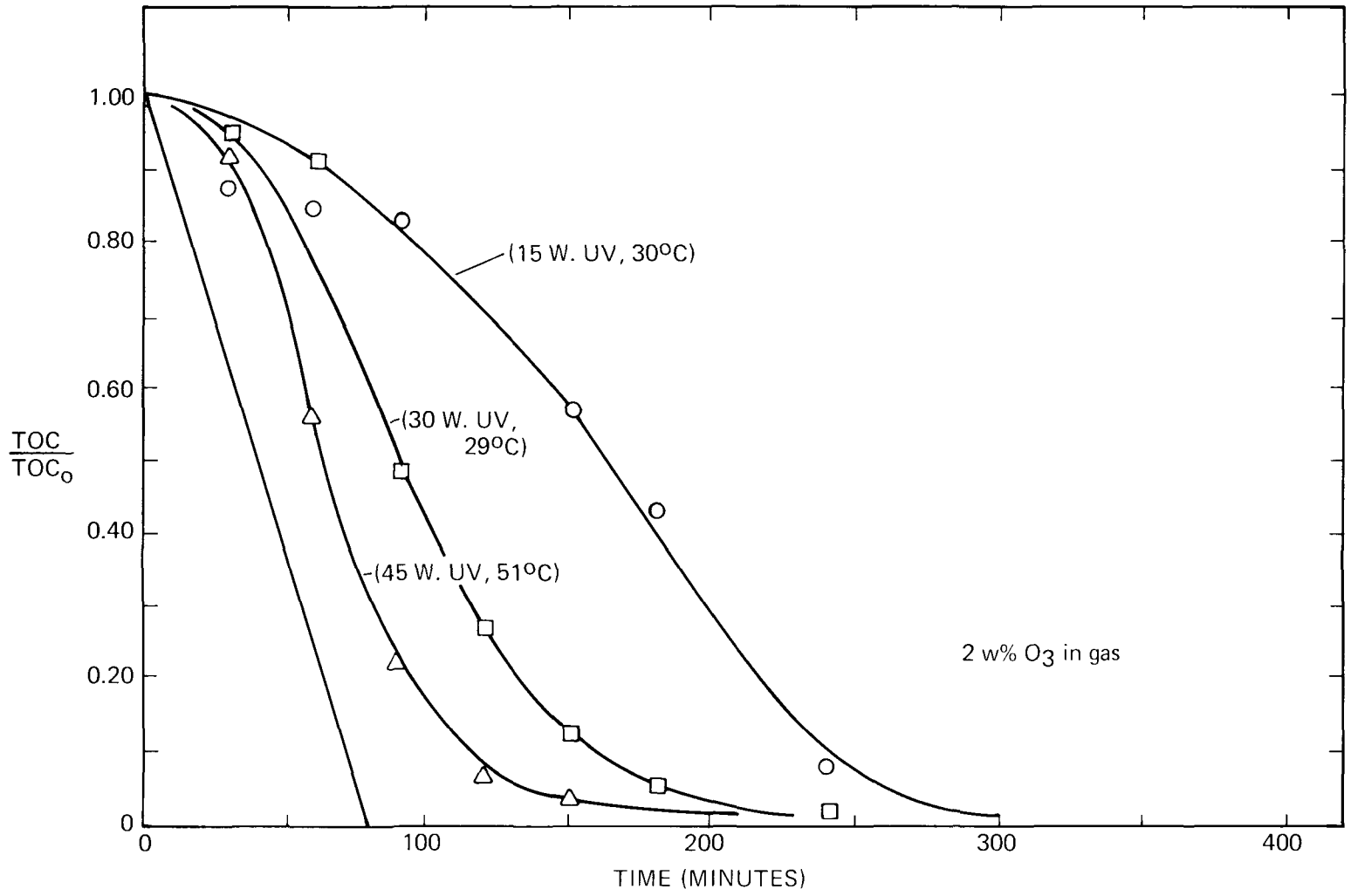

Figure 2.2.2.4.2-2. OZONE/UV OXIDATION OF ACETIC ACID; EFFECT OF INCREASED RADIATION INPUT

Ozone feed = 70 milligrams ozone/minute in 3.4 liters per minute of oxygen; or about 1.4 percent by weight ozone in oxygen

Reactant preparation = Pure Aroclor 1254 was mixed with an equal portion of methanol, which was then mixed with distilled water to get an apparent true solution. A Hamilton syringe, with vernier calibration giving microliter increments was used to prepare an estimated 200-ppb concentration in a beaker. This solution was added to the reactor (3 liters). Then a 200-ml sample was withdrawn to get the "before" sample.

When preparing the Aroclor 1016 solution, a more concentrated PCBs solution of about 800 ppb was achieved. The before and after treatment concentrations of PCBs are shown in Table 2.2.2.5.1-1.

The data show that the destruction was highly effective in these pioneering tests; more than 99 percent of the original PCBs were destroyed. In addition, the final concentration was at the desired level of about 1 ppb. Such an effluent would be expected to be a reasonable stream for recycle operations and intermediate term zero discharge potential.

Of course the contact time and ozone expenditure were overly large, but the goal of this preliminary testing was to demonstrate destruction of two key Aroclors in use today.

A more comprehensive study of the UV-ozonolysis of Aroclor 1016 was run, with samples removed from the reactor every 15 or 30 minutes for up to 4 hours. As shown in Table 2.2.2.5.1-2, the initial PCB concentration was 237 ppb. Within 45 minutes the PCB level had been degraded to 1 to 2 ppb, a 99^{+}-percent decomposition. After 2 hours the PCB concentration was less than 100 ppt. The last column in the Table labeled

Table 2.2.2.5.1-1

UV Ozonolysis Destruction of Typical Capacitor and Transformer PCBs at Westgate Research

	Aroclor 1016	Aroclor 1254
Initial (influent) Concentration (ppb)	790	200
Final (effluent) Concentration (ppb)	0.5	1.5

Table 2.2.2.5.1-2

Destruction of Aroclor 1016 by UV-Ozonation at Westgate Research

UV-Ozonation Time (minutes)	Aroclor 1016 Conc. (ppb)	Chlorinated Products Conc. (ppb)
0	237.0	0.00
15	14.7	33.8
30	7.76	25.86
45	1.73	21.80
60	1.73	18.47
75	0.52	17.63
90	5.2	21.43
120	< 0.1	12.64
150	< 0.1	16.91
180	< 0.1	9.12
210	< 0.1	23.07
240	< 0.1	12.58

"Chlorinated Products Concentration" is of particular interest. This is the first time quantitative data on the residual compounds in the reaction mixture have been compiled. These residual compounds reach a 33.8-ppb level within 15 minutes from the start of the test and then erratically and slowly drop to about 10 to 20 ppb over the 4 hour period.

The only statements that can be made about these residual compounds is that they are non-PCBs, but chlorinated materials. Possibly a different UV wavelength, or ozone concentration, or the use of a catalyst or other agent could degrade these other products to the non-detectable level.

2.2.2.5.2 Pilot-Scale Tests of Refractory Organics Decomposition

Zeff has described pilot-scale tests of UV-assisted ozonation using 253.7-nm radiation ("UV-OX (TM) Process for the Effective Removal of Organics in Waste Waters", presented at the 68th Annual Meeting of the AIChE, November 20, 1975). This work has grown from a patented invention for a household appliance used to purify tap water. The effectiveness of the method is demonstrated by the reduction in total organic carbon (TOC) of 500 ml of tap water from 5 mg/l to 1 mg/l in 1 minute, using 0.07 mg of ozone and 0.1 watts of 253.7-nm UV. The bacteria plate count was also reduced by a significant amount.

In these studies, batch reaction conditions were optimized to get closest to complete TOC destruction with least O_3 and UV energy input. Then continuous and two-stage operations were investigated. As shown in Figure 2.2.2.5.2-1, a 6-inch-path length of UV was compared with a 3-inch path. In a batch test, the longer path condition took 3 to 4 times as long as the shorter path to achieve the same TOC reduction, in approximate accord with the inverse square law.

The laboratory-scale equipment arrangement is shown in Figure 2.2.2.5.2-2. Table 2.2.2.5.2-1 presents TOC reductions for a 5-part organic mixture under two experimental conditions, showing ozone usage

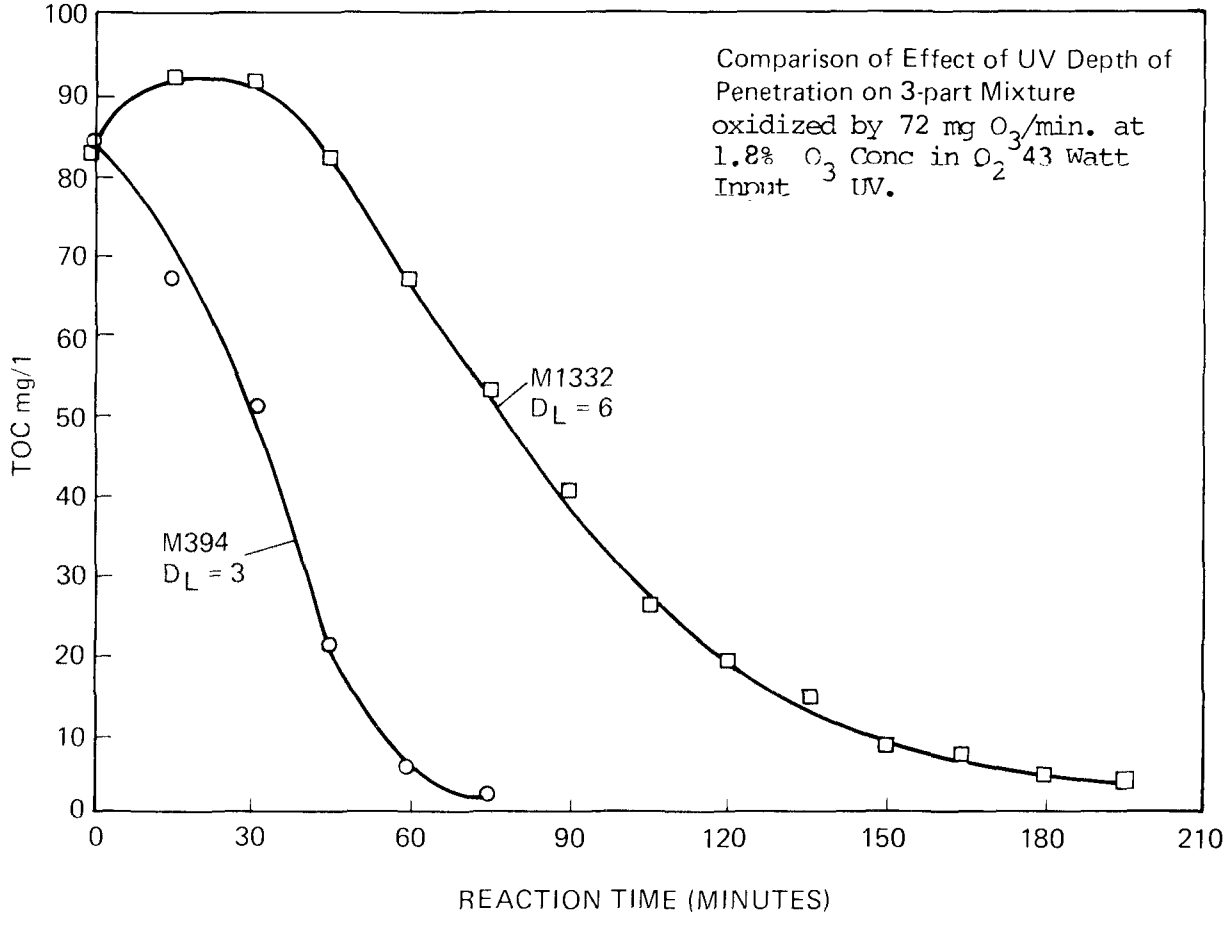

Figure 2.2.2.5.2-1. THE EFFECT OF UV PATH LENGTH ON TOC DESTRUCTION

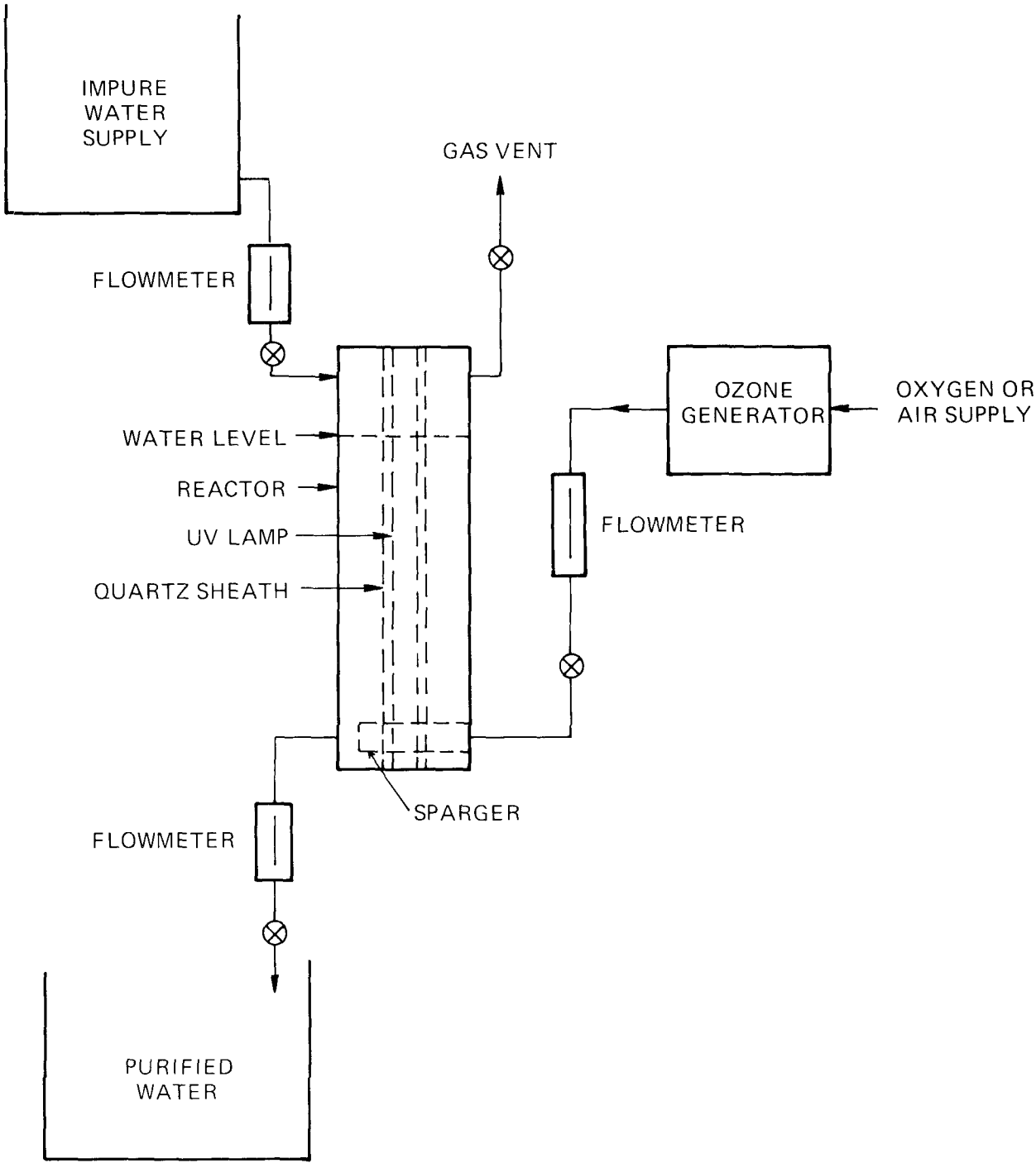

Figure 2.2.2.5.2-2. SCHEMATIC OF BENCH REACTION SYSTEM AT WESTGATE RESEARCH CORP.

		REACTOR 1									REACTOR 2							OVERALL		
Experiment Number	Influent Conc TOC mg/l	Res Time/Real min	Input O_3 Conc % by wt	Input O_3 Mass Flow mg/min	Output O_3 Conc % by wt	Output O_3 Mass Flow mg/min	Effluent TOC Conc mg/l	Ave Rate of TOC Removal mg/min	UV Index w-m/mgC	Supplied TOC/O_3 Effic %	Input O_3 Conc % by wt	Input O_3 Mass Flow mg/min	Output O_3 Conc % by wt	Output O_3 Mass Flow mg/min	Effluent TOC Conc mg/l	Ave Rate of TOC Removal mg/min	UV Index w-m/mgC	Supplied TOC/O_3 Effic %	Ave Rate of TOC Removal mg/min	UV Index w-m/mgC	Supplied TOC/O_3 Effic %
S341	39.0	80	2.5	124	1.3	65	9.0	4.5	9.6	29.0	2.5	124	1.5	74	5.0	0.6	46.7	3.9	2.5	13.9	16.4
S342	75.5	48	2.7	171	1.8	113	21.0	13.6	3.2	63.7	2.7	171	1.9	120	6.0	3.7	7.5	17.5	8.7	4.1	40.6

TABLE 2.2.2.5.2-1

Simulated Two-Stage, Continuous UV-Ozonation of a 5 Component Mix at Westgate Research Corp.

(43 watt UV Input Reactor 1)
(28 watt UV Input Reactor 2)

efficiencies, and energy usage efficiencies, with a simulated two-stage continuous operation. Zeff has calculated the prime energy costs for UV-assisted ozonation based on a scale-up of a pilot reactor. The pilot reactor handled 20 gph, so that 210 of these units in parallel would handle 100,000 gpd. The plant area needed for this equipment would be only 18 feet square, with a height of 3 feet.

Based on pilot tests of this reactor, it might be assumed that it could convert wastewater of 40 mg/l TOC to less than 5 mg/l, using six 43-watt UV lamps. It is assumed that a UV energy requirement of 5 watt-minutes per millgram of carbon oxidized will suffice. Also, the ozone requirement will be 2 moles per gram-atom of carbon oxidized, but at a 75-percent efficiency, or 2/.75 = 2.67 moles ozone per gram-atom of carbon. Assuming a power cost of 1.5¢/KWH; the ozone generating power cost would be $53.40 and the UV power would be $18.93; or a total of $72.33 per 100,000 gal. of water treated.

Zeff points out that the 210 reactor modules would require•1260 43-watt lamps (six per reactor). This appears to be a large number of lamps, but it is actually very practical. Such arrays of lamps are regularly used for room illumination in factories and large offices, and the low-pressure mercury lamps used here are nothing but fluorescent lamps without the phosphor coating. An extended array such as this is much more energy-efficient than fewer high-power high-pressure industrial UV irradiators; and maintenance and replacement of lamps is much simpler. The life of the low-power lamps is 7500 hours as compared to 1000 hours for the high-power lamps.

2.2.2.6 Laboratory Test Results from AiResearch Corporation

In the laboratory tests of the AiResearch Corporation, high-pressure 450-watt mercury lamps were used. The test solutions were very dilute mixtures of methanol, ethanol, isopropanol, and acetone in water. The ozone was introduced into the 4-liter organic mixture in an oxygen stream bubbled in at 2 liters per minute; ozone concentration in the oxygen was 33 mg/liter. With the expenditure of 7.9 grams of ozone, the mixture of alcohols and acetone was reduced from 115 mg/l COD to 10 mg/l in 2 hours.

2.2.2.7 Comments on UV/Ozone Tests

These highly encouraging tests by three different companies in the destruction of some of the most refractory organics encountered in wastewater treatment, give confidence that scaled-up systems can adequately destroy PCBs in industrial wastewaters. The next step required is detailed cost effectiveness testing in pilot-scale equipment.

2.2.3 Non-Carbon Adsorbents for PCBs

A variety of non-carbon materials, some well-known for treating water and some that seem to be quite specific for PCBs removal, have been found. Limited cooperative laboratory testing of PCBs removal has been conducted in order to gain insight into potential effectiveness.

Materials considered or examined were:

1) Rohm and Haas Amberlite XAD series resins - These were laboratory-tested for PCBs removal
2) Polyvinyl chloride - Tested by Canadian investigators for PCBs removal
3) Clays and Humus - Tested by Monsanto for PCB removal
4) Polyurethane - Tested by Canadian, Swedish and other investigators for PCBs removal
5) Sphagnum Peat - Used in commercial water purification, but has not been tried with PCBs
6) Polyelectrolytes as floccing agent - Not really adsorbents, but could be aids to removing finely divided adsorbents from treated wastewaters; have not been tested
7) Coal - Not tested with PCBs, but being experimentally used for water treatment
8) Molecular Sieves - Not tried with PCBs, since they were judged to be of improper character; they would be expected to preferentially remove water from PCBs, rather than PCBs from water
9) Miscellaneous Sorbents - A number of proprietary Oil Sorbents, such as the "3M Brand" series, that were not tested with PCBs, might have some application

2.2.3.1 The Amberlite XAD Series of Macroreticular Resins

2.2.3.1.1 PCBs Adsorption Testing

Cooperative preliminary experimental work was carried out between Versar and Rohm and Haas to test the PCB-adsorption capacity of XAD-4 resins. The tests confirmed the effectiveness of this resin (see Appendix D).

Since carbon adsorption is the more established technology for removal of organics, it was felt that a side-by-side comparison of a carbon and an Amberlite resin would be useful.

These tests showed that resin and carbon are comparable in PCBs removal effectiveness. The resin method includes on-site regeneration, with the concentrated waste PCBs treated by incineration. Details on the apparatus and materials used by Rohm and Haas and the results of their experiments are given in Appendix A.

2.2.3.1.2 Process Concept for Resin Adsorption of PCBs

Based upon the experiments described in Appendix A, the Rohm and Haas experience has led them to envision the following plant-scale process, subject to further experimentation.

The wastewater to be treated is passed through one or more columns, each containing polymeric adsorbent. Once the resin is loaded to capacity with PCB, it is taken off line for regeneration. A water miscible solvent is usually used for regeneration, and is in turn displaced from the adsorbent by water. The stream resulting from this operation is carefully fractionated to optimize solvent recovery. The final rinse usually contains a very low level of solvent in water and this must be collected as a PCBs wastewater.

The distillation column permits solvent recovery at high purity, leaving water and PCB in the bottoms. To minimize

distillation costs, a patented variation of the process, called "superloading", is used to maintain a high PCB concentration in the final toxic material to be disposed. Part of this process includes a separator from which the organic phase is PCB while the aqueous phase is recycled to "superload" the adsorbent. A completely enclosed system can readily be designed to insure minimum operator exposure to PCB. A process concept flow sheet of such a PCBs removal system is shown in Figure 2.2.3.1.2-1.

The experimental work necessary to plant-scale design is as follows:

1. More extensive leakage data should be gathered for XAD-4 and other Amberlite polymeric adsorbents, encompassing several influent concentrations of PCBs; other Aroclors should also be tested.
2. The ability of the Amberlite polymeric adsorbents to be solvent regenerated should be demonstrated and the optimum solvent determined
3. The capacity of the Amberlite polymeric adsorbents should be determined over a number of loading/regeneration cycles to see the effect, if any, of long-term operation on capacity.

The description of XAD-4 resin and its comparison with other Rohm and Haas resins that might also have application to PCBs removal are given in Appendix B.

Further descriptions of non-carbon adsorbents are presented in the Appendix C. They contain relevant experimental work on PCBs and refractory organics, and are included to give a more complete picture of the options assessed under this program. Also included in Appendix C are summaries of catalytic reduction, catalytic oxidation, microorganism studies, ultrafiltration, and reverse osmosis. For the removal of PCBs from wastewater, all are considered to be in the research stages. Several have potential for contributing to zero discharge technology.

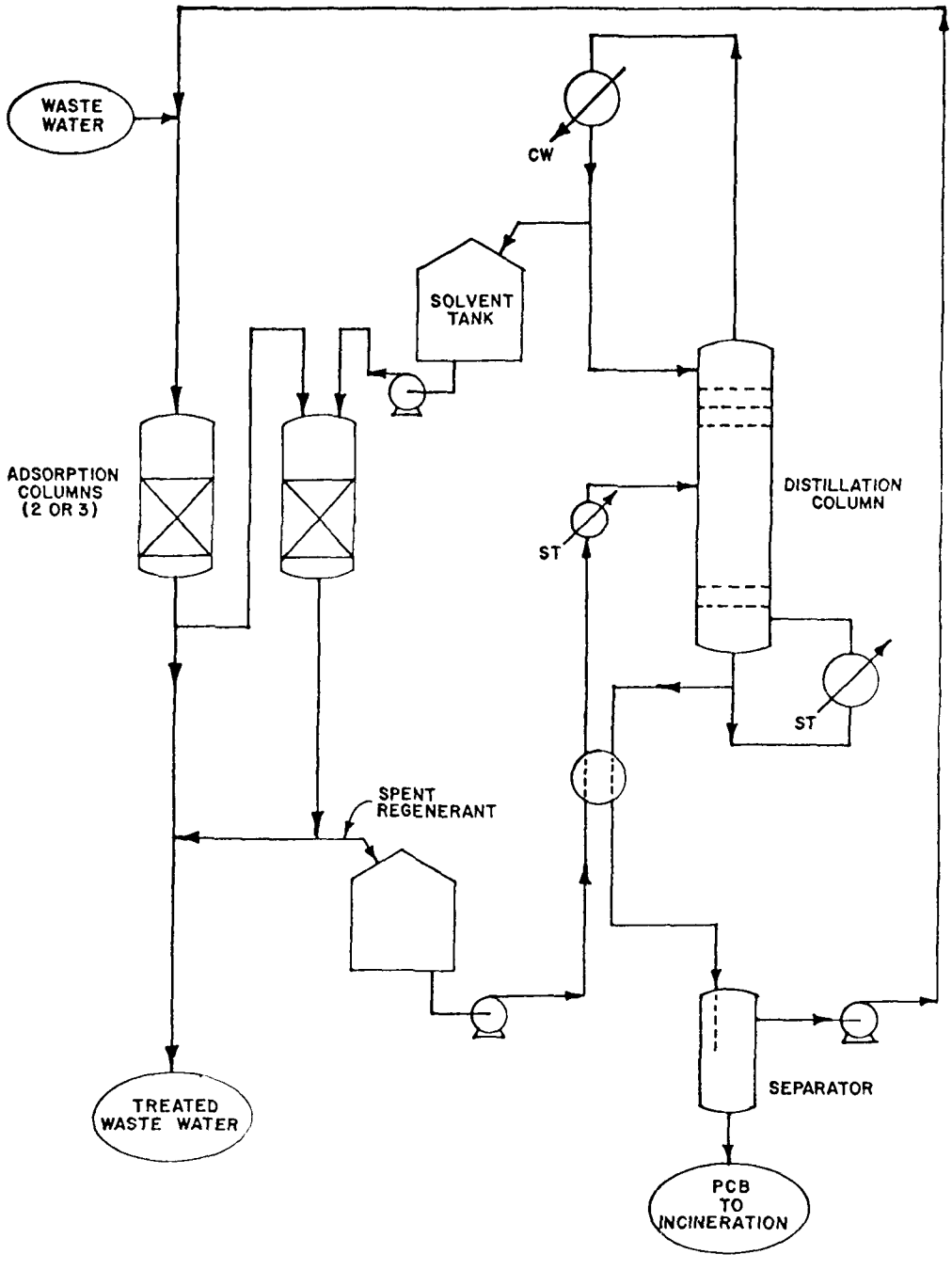

Figure 2.2.3.1.2-1
PCBs REMOVAL PROCESS CONCEPT FLOW SHEET
BY ROHM AND HAAS COMPANY

2.3 Treatment of PCBs - Contaminated Solid Wastes

2.3.1 Incineration

Incineration has been described in Section 1.3.3. For the variety of solids ranging from granular particulate, such as fuller's earth, to large chunks of solids, such as transformer internals, the best destruction method is rotary kiln incinerator, followed with adequate afterburning to prevent PCB vaporization.

2.3.2 Sanitary Landfill

The best technology for segregation of the PCBs solid wastes so that spillage, leakage to waterways, or emissions to the atmosphere will not occur, is described under Section 1.3.3.

2.4 Treatment of Air Emissions

2.4.1 Condensation Methods

Our survey found one plant that was practicing chilling of exhaust gases from PCBs processing areas. With the low vapor pressure of PCBs even at room temperature, it might be expected that they could be effectively swept out of chilled air with the condensing water. Undoubtedly this does occur to some extent; however, the high activity coefficients of PCBs tend to keep them vaporized at levels near their pure liquid vapor pressure at that low temperature. Previous work by Versar has shown that PCBs in stack emissions from sludge incineration are not removed by water scrubbing (EPA Contract 68-01-1587).

2.4.2 Granular Adsorption Methods

Although no information was uncovered on the collection of PCBs from air streams by any form of granular filter, it would be expected that such treatment should be effective. In fact, it would be expected that the same adsorbents discussed under Sections 2.2.1 and 2.2.3 above would be the most effective. Activated carbon removal of organic vapors has been practiced in such widely divergent circumstances and devices as gas masks, kitchen range hood systems, and submarine air recycle systems.

2.4.3 Catalytic Oxidation of Organics in Evaporated Effluents

Studies of vapor phase oxidation show the potential for PCBs destruction in air exhausts at lower than incineration temperatures. Catalysts would have to be resistant to HCl vapors, but fuel savings and insulation savings would be large. This procedure should be amenable to all proportions of water and organics in such air streams.

Borkowski passed PCB vapors over a catalyst at elevated temperatures ("The Catalytic Oxidation of Phenols and other Impurities in Evaporated Effluents," Water Research (1); 367 (1967)). Copper oxide was the most active of a large number of catalysts tested and oxidation to carbon dioxide and water appeared to be complete at temperatures over 300°C and at residence times of about 0.08 seconds. Without the catalyst, 1000 to 1200°C was required to achieve the same degree of removal.

Walsh and Katzer studied contaminated air-water vapor streams over supported copper oxide and showed that the rate was first order in phenol and relatively rapid between 150 and 270°C ("Catalytic Oxidation of Phenol in Dilute Concentration in Air", Ind. Eng. Chem. Process Design Develop, (12); 477 (1973)). At 150°C and a space velocity of 4100 hr^{-1} the phenol conversion was 99.6 percent, and there was little evidence of any intermediate organics in the condensate.

These methods of air purification are in the research stages, and actual testing of PCBs in air is required.

2.5 The Potential for Zero Discharge

The best method of achieving zero discharge, in the face of the practical problem of defining what a zero concentration is, is to establish total recycle. This appears feasible for wastewater, but not for solids or air emissions. Fortunately, for solids, incineration technology promises very high efficiency of destruction simply by setting the temperature and residence times high enough.

For air emissions, although vapor pressures are low for PCBs, large surfaces have the potential for giving off significant quantities of PCBs. Versar research has found powerful adsorption and destruction methods for organics in air. If destruction equivalent to that achieved by incineration can be achieved at lower temperatures through catalyzed reactions, near zero emissions are possible.

For wastewater recycle, methods of adsorption and catalytic destruction promise PCBs reduction to levels low enough such that reuse is practical. Our survey has shown some municipal and fresh waters contain PCB concentrations of 1 ppb or greater, and many river waters can contain many times that. Thus the recycled water at 1 ppb of PCB would be very suitable for reuse.

3.0 RATIONALE AND SELECTIONS OF CURRENTLY RECOMMENDED WASTE TREATMENT METHODS

Based upon our plant surveys of the PCB-using capacitor and transformer manufacturers, the single U.S. PCB manufacturer, and waste treatment equipment suppliers, and upon the analysis and evaluation of all available technologies whether in commercial use, pilot plant, or research stages, Versar has developed recommendations for the most practical treatment methods available now. We have also made predictions of methods applicable over the short- and long-term future. Our current recommendations are based on technology that is either currently in use and doing an excellent job of PCB destruction or removal, or holds great promise of doing that job based upon success in similar but non-PCB, applications.

3.1 Incineration Recommended for Liquid PCBs and Scrap Oils

For liquid PCBs and contaminated scrap oils, we determined only two candidate methods: incineration and sanitary landfill. It is possible that some chemical degradation methods discussed under wastewater treatment might later become applicable to concentrated PCB liquids, but the prospect is not clear at this time.

Sanitary landfill is not recommended for liquids when incineration is available. The potential for liquids escaping in large quantities from ruptured

containers, caused by any of a number of circumstances, and then causing massive leaching and liquid control problems at the landfill, is felt to be too great.

Incineration, on the other hand, offers a straight-forward and physically simple method of final destruction. Incineration facilities that have successfully handled PCB liquids are available in Massachusetts, New York, Delaware, Illinois, Texas and Louisiana. Pilot or experimental facilities are available in other parts of the country. With the increase in requirements for disposing of many other liquid organics, it is expected that new facilities suitable for PCBs destruction will be added.

Versar therefore recommends incineration, particularly if there is a choice of the kind of disposal facility to be constructed.

3.2 Carbon Adsorption and UV-Assisted Ozonation Recommended for PCBs in Wastewater

Our survey of wastewater treatment technology was extensive and excellent potential for current, near- and long-term methods was found. The longer term pilot- or research-scale methods hold great promise for achieving zero discharge.

For wastewater treatment, Versar's recommendation is carbon adsorption. This technology has been well proved in a wide variety of industrial adsorption problems. It is constantly being successfully applied to the removal of new organics from water. Our cooperative laboratory work with several suppliers has confirmed preliminary reports of success in removing PCBs. All of the aspects of commercial carbon adsorption, from favorable capital and operating economics to reasonable operating methods, materials of construction, and lack of transport of pollution to air or land, have been proven for PCB-like materials. There is every reason to expect commercial success with PCB removal from wastewater.

Potential problems with carbon adsorption includes the collection of backwash water and spent carbon for incineration or other treatment. With these limitations in mind, we studied the various alternatives and have determined

that the UV/ozone method is the best. However, it must be appreciated that this technology is still somewhere in the pilot-plant and research stage, but our cooperative testing with two equipment suppliers shows the method to be effective in destroying PCBs. It offers the potential of degrading breakdown products all the way to CO_2, water and HCl. Any kind of process that generates no solids or liquids for later disposal must be considered for application where no wastewater treatment facilities now exist, and where facilities for incineration of carbon system wastes are not convenient.

The major factors yet to be determined for the UV/ozone systems are costs and operating practicality. Separately, UV and ozone systems are being used in commercial applications, and it is therefore anticipated that the combination will be practical. Choices of the proper UV-radiation wavelength and power levels still need to be made, as well as methods of improving ozone-use efficiency. It appears that commercial UV and ozone generators are suitable.

3.3 Incineration and Landfill Recommended for Contaminated Solids

Although incineration is recommended for PCB contaminated solids, because of its final destruction capability and prevention of any long-term problems, sanitary or scientifically-controlled landfilling must be considered a close second choice. At present, the only incineration facilities for handling the full spectrum of PCB-contaminated solids are those of Rollins Environmental Services in Delaware, Texas and Louisiana. This limitation on locations for treatment requires that the alternate, landfill, be considered.

Landfill, as practiced by Chemtrol Corp., appears perfectly suitable for containment of PCB-contaminated solids, at least over a medium term. Our reservation with this method is that it might be relegating a problem to the future. Our concern is that some decades in the future, when a landfill might be closed, no agency will be prepared to handle the sump emptying and maintenance necessary to prevent leaching. We anticipate that some time in the future, many landfills will have to be mined, and final destruction or recovery carried out for land use or hazard reasons.

3.4 Dry Carbon Filter Adsorption Recommended for Control of Air Emissions

For much the same reasons listed in Section 3.2, we recommend that current emissions of PCBs in plant air be trapped in carbon-containing filters. It is recognized that other and better adsorbents may emerge from research, as described in Section 2.2.3, but it is felt that such advances will be readily applicable to any kind of filter pack, screen or cartridge system already in use.

The long record of proven capability of carbon adsorption is the main factor in its choice. However, since contaminated carbon must be either incinerated or regenerated, over the longer term we see the use of low-temperature catalytic oxidation methods as described in Section 2.4.3. Catalytic oxidation methods hold promise for near zero discharge, with the generation of no solid wastes.

BIBLIOGRAPHY

1. Hutzinger, O., Safe, S. and Zitko, V., The Chemistry of PCBs; CRC Press, 1974.

2. Carn, B., "Upflow - Downflow Carbon Adsorption", Paper #85C; Nov. 19, 1975.

3. "Methods for Organic Pesticide Analysis in Water and Wastewater", Federal Register, Volume 38, #75, Part II, 1971.

4. Hager, D.G.; and Rizzo, J.L., "Removal of Toxic Organics from Wastewater by Adsorption by Granular Activated Carbon", presented to EPA Technology Transfer Session on Treatment of Toxic Chemicals; Atlanta, Ga., April 19, 1974.

5. "A Symposium on Activated Carbon", ICI-United States, Willmington, Delaware, Booklet #19897; 1968.

6. Hutzinger, O., and Safe, S., Nature, 1971.

7. Prengle, H.W., Jr., Mauck, C.E., Legan, R.W., and Hewes, C.G., III., "Ozone/UV Process Effective Wastewater Treatment" in Hydrocarbon Processing, October, 1975, p. 82-87.

8. Zeff, J.D., "UV-OX(TM) Process for the Effective Removal of Organics in Wastewater", Paper #101C, presented at the 68th Annual Meeting of the AICHE, November 20, 1975.

9. Brice, C.A., et al., "Final Report on MUST Wastewater Treatment System", under Contract DADA 17-71-C-1090; July 15, 1973.

10. Borkowski, B., "The Catalytic Oxidation of Phenols and Other Impurities in Evaporated Effluents", in Water Research 1 367 (1967).

11. Walsh, N.A., and Katzer, J.R., "Catalytic Oxidation of Phenol in Dilute Concentration in Air", in Ind. Eng. Chem. Process Design Develop. 12 477 (1973).

12. Musty, P., and Nickles, G., J. Chromat., 89:185 (1974).

13. Lawrence, J. and Tosine, M.M., "The Adsorption of PCBs from Aqueous Solutions and Sewage", Progress Report (undated), 1975; Water Chemistry Section of Canada Center for Inland Wastes, Burlington, Ontario, L7R4A6.

14. Gesser, H.D.; in Analytical Letters, 12:883 (1971).

15. Tucker, E.S., et al. (Monsanto), in Bulletin of Environmental Contamination and Toxicology 13(1):86 (1975).

16. Hague, R., et al., Environmental Science Technology, 8:139 (1974).

17. Berg, et al., Bulletin of Environmental Contamination Toxicology, 7:338 (1972).

18. Sawai, T., Genshiryohu Kogyo, 18(12):43-7 (1972).

19. Stuart, J.D., et al. (University of Connecticut, Dept. of Chemistry), preprint paper. Nat. Meet. Div. Air, Water Waste Chemistry, ACS 1972, 12(2, 804).

20. Smith, G., and Chen, J.W. (Southern Illinois University), presented paper #101E at 68th Annual AIChE Meething, November, 1975.

SECTION VII

PRODUCTION AND DISTRIBUTION

1.0 PRODUCTION AND CURRENT USE

1.1 Domestic Production of PCBs and PCTs

Currently there is only one known commercial scale PCB production installation in the U.S., the William G. Krummrich plant of the Monsanto Chemical Company in Sauget, Illinois. This facility is specifically designed for chlorobiphenyls production and has a design capacity of 48 million pounds per year.

Until 1971 PCBs were also manufactured at Monsanto's Anniston, Alabama plant which had a design capacity approximately equal to the Sauget plant. The Alabama operation was discontinued and the plant dismantled in 1971.

PCBs manufactured by Monsanto are marketed under trade name "Aroclor". Tables 1.1-1 and 1.1-2 present data from Monsanto related to production and sales of PCBs from 1957-1974 and production of polychlorinated terphenyls (PCTs) from 1959-1972. The production of PCTs were terminated in 1972. Until then in addition to PCBs (Aroclor series 12) Monsanto manufactured Aroclors 2565, 4465, 5442 and 5460. Aroclors 2565 and 4465 were blends of PCBs and PCTs and Aroclors 5442 and 5460 were two different grades of PCTs. Also given in these Tables are breakdowns of domestic sales per use category and by PCB grade. Detailed information and breakdown on PCB/PCT blends and PCT grades is not available. However, Monsanto reports that the predominant material produced was Aroclor 5460. When produced and marketed these materials were used in plasticizer applications. Figures 1.1-1 through 1.1-3 are graphical representations of these data.

As can be seen from Figure 1.1-1, the majority of the PCBs produced in the United States was marketed domestically. Production and sales of PCBs in 1974 were less than half of those for 1970, where production and sales of PCBs were at their maximum. The difference between production and sales on

TABLE 1.1-1

PCB & PCT MANUFACTURE AND PCB SALES

MONSANTO INDUSTRIAL CHEMICALS COMPANY

1957 thru 1964
(Thousands of Pounds)

	1957	1958	1959	1960	1961	1962	1963	1964
U.S. PRODUCTION OF PCBs	(1)	(1)	(1)	37919	36515	38353	44734	50833
DOMESTIC SALES OF PCBs	32299	26061	31310	35214	37538	38043	38132	44869
U.S. EXPORT SALES OF PCBs	(2)	(2)	(2)	(2)	(2)	(2)	3647	4096
U.S. PRODUCTION OF PCTs	-	-	2996	3850	2322	4468	4920	5288
DOMESTIC SALES OF PCBs BY CATEGORY								
Heat Transfer	-	-	-	-	-	157	582	929
Hydraulics/Lubricants	1612	1549	2685	2523	4110	3915	3945	4374
Misc. Industrial	704	755	1569	1559	2114	1681	1528	1692
Transformer	12955	5719	5984	7921	6281	7984	7290	7997
Capacitor	17028	14099	16499	16967	15935	15382	15606	19540
Plasticizer Applications	(1)	3939	4573	6244	9098	8924	9181	10337
Petroleum Additives	-	-	-	-	-	-	-	-
DOMESTIC SALES BY PCB GRADE								
Aroclor 1221	23	16	254	103	94	140	361	596
Aroclor 1232	196	113	240	155	241	224	13	13
Aroclor 1242	18222	10444	13598	18196	19827	20654	18510	23571
Aroclor 1248	1779	2559	3384	2827	4023	3463	5013	5238
Aroclor 1254	4461	6691	6754	6088	6294	6325	5911	6280
Aroclor 1260	7587	5982	6619	7330	6540	6595	7626	8535
Aroclor 1262	31	184	359	326	361	432	414	446
Aroclor 1268	-	72	102	189	158	210	284	190
Aroclor 1016	-	-	-	-	-	-	-	-

(1) Production figures and Plasticizer Applications figures unavailable during year indicated.
(2) U.S. Export Sales figures unavailable during year indicated.

TABLE 1.1-2

PCB & PCT MANUFACTURE AND PCB SALES

MONSANTO INDUSTRIAL CHEMICALS COMPANY

1965 thru 1974
(Thousands of Pounds)

	1965	1966	1967	1968	1969	1970	1971	1972	1973	1974
U.S. PRODUCTION OF PCBs	60480	65849	75309	82854	76389	85054	34994	38600	42178	40466
DOMESTIC SALES OF PCBs	51796	59078	62466	65116	67194	73061	34301	26408	37742	34406
U.S. EXPORT SALES OF PCBs	4234	6852	8124	11231	10624	13651	-	6388	8346	5395
U.S. PRODUCTION OF PCTs	6470	8190	9450	8870	11600	17768	20212	8134	-	-
DOMESTIC SALES OF PCBs BY CATEGORY										
Heat Transfer	1237	1766	2262	2529	3050	3958	3060	752		
Hydraulics/Lubricants	4616	4258	4643	5765	8039	7403	1552	0		
Misc. Industrial	1841	1779	1426	1283	1079	1627	1155	0		
Transformer	8657	8910	11071	11585	12105	13828	11134	25656	37742	34406
Capacitor	23749	28884	29703	29550	25022	26708	14141			
Plasticizer Applications	11696	13481	13361	14404	16460	19537	3259	0		
Petroleum Additives	-	-	-	-	1439	-	-	0		
DOMESTIC SALES BY PCB GRADE										
Aroclor 1221	369	528	442	136	507	1476	2215	171	35	57
Aroclor 1232	7	16	25	90	273	260	171	0	0	0
Aroclor 1242	31533	39557	43055	44853	45491	48588	21981	728	6200	6207
Aroclor 1248	5565	5015	4704	4894	5650	4073	213	807	0	0
Aroclor 1254	7737	7035	6696	8891	9822	12421	4661	3495	7976	6185
Aroclor 1260	5831	5875	6417	5252	4439	4890	1725	305	0	0
Aroclor 1262	558	768	840	720	712	1023	1	0	0	0
Aroclor 1268	196	284	287	280	300	330	0	0	0	0
Aroclor 1016	0	0	0	0	0	0	3334	20902	23531	21955

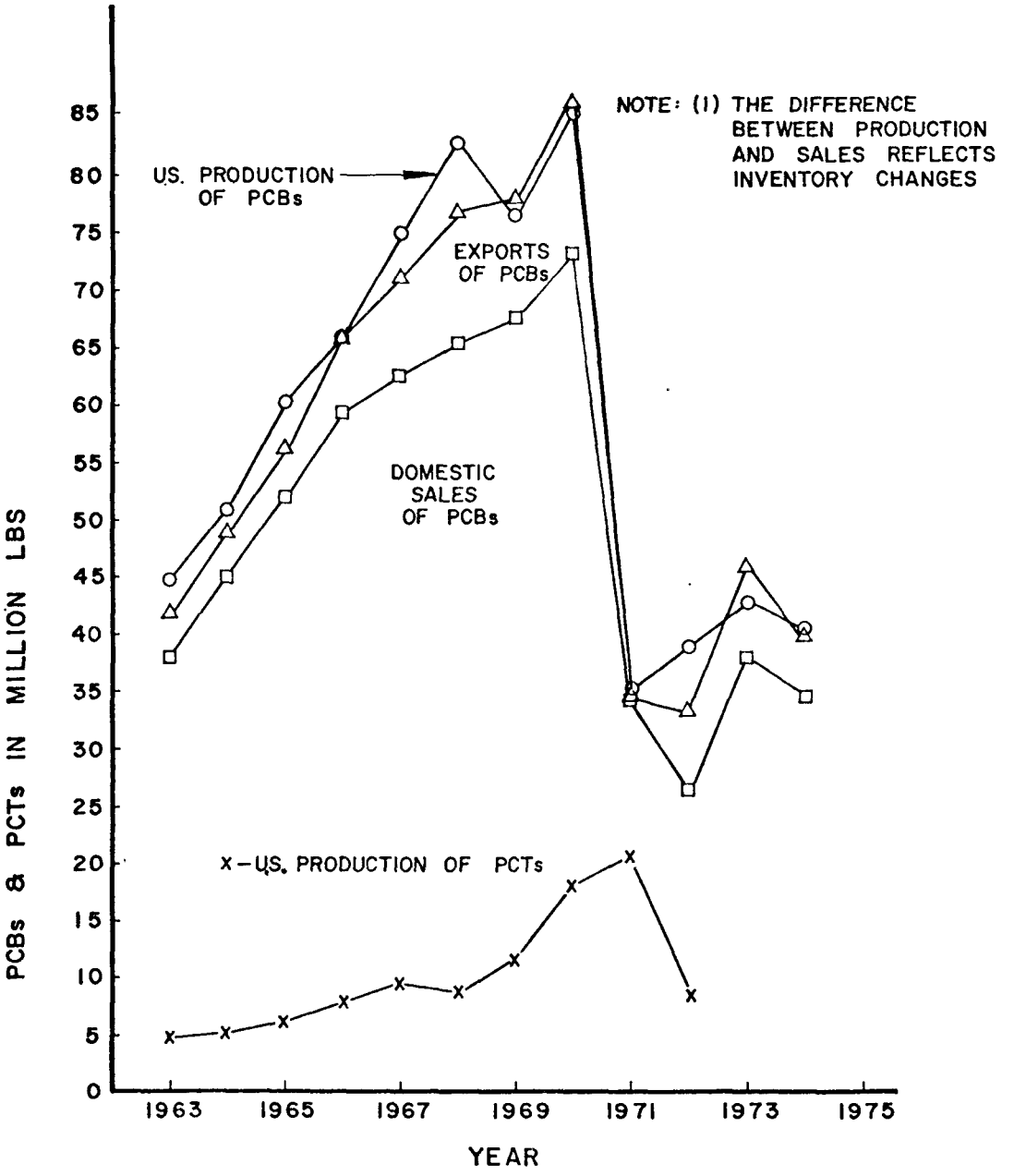

Figure 1.1-1 - U.S. Production of PCBs and PCTs and Domestic Sales and Exports of PCBs

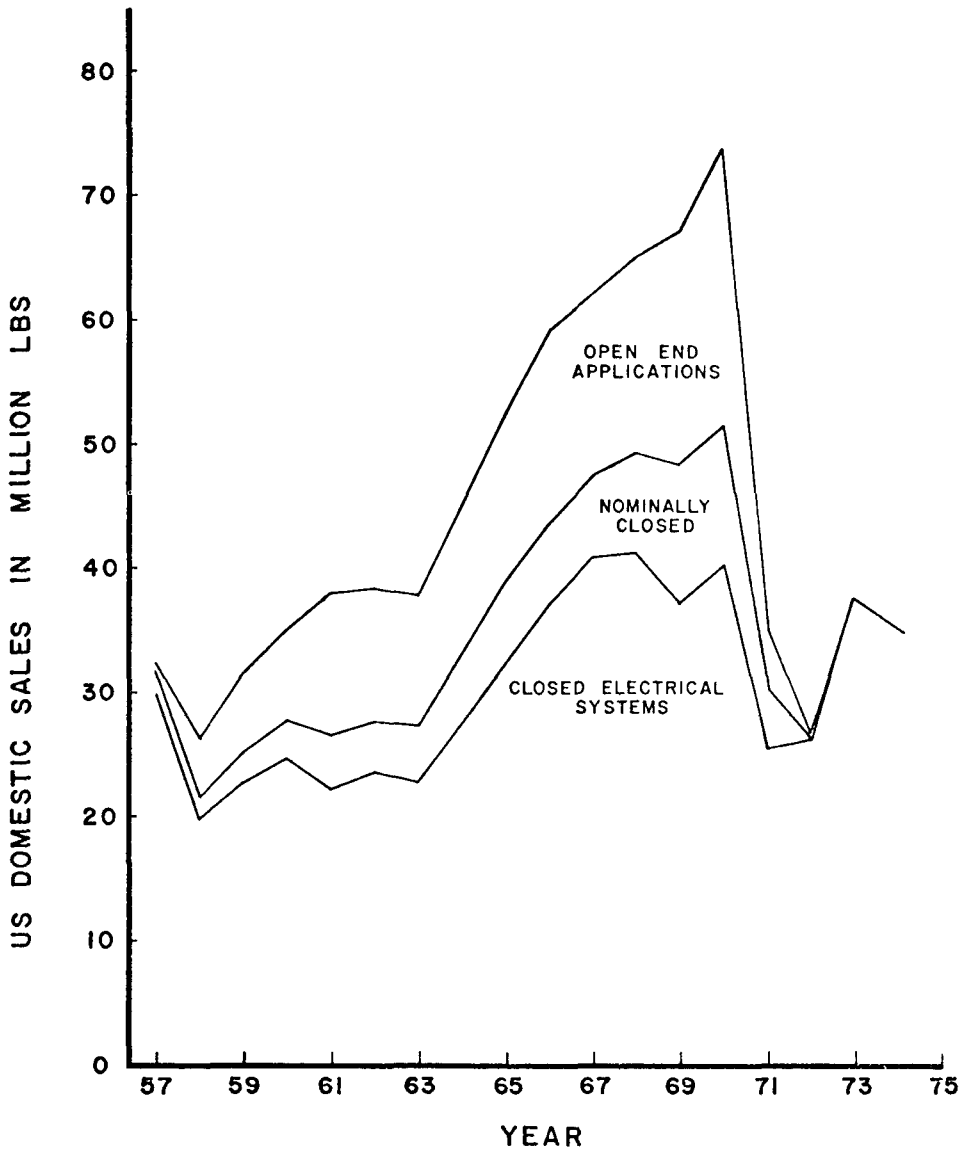

Figure 1.1-2 - U.S. Domestic Sales of PCBs by End Use Applications

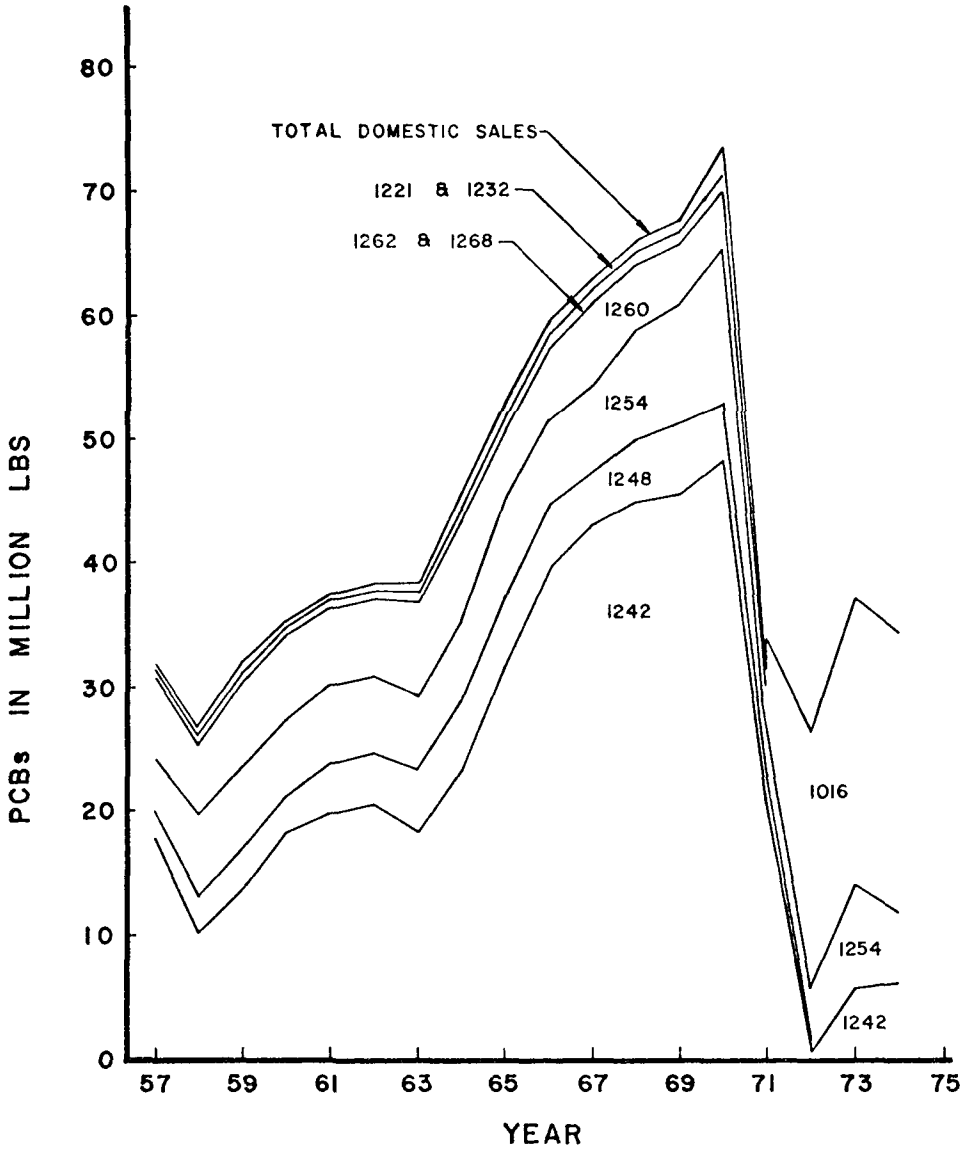

Figure 1.1-3 - U.S. Domestic Sales of PCBs by Type

this graph reflects inventory changes of PCBs. Figure 1.1-1 also indicates that the production of PCTs increased steadily through 1971 when their production was at the maximum. The production of PCTs was terminated in 1972.

Table 1.1-3 shows production, sales and export of PCBs for the first quarter of 1975. Monsanto reports that sales for Aroclor are expected to increase at an average annual rate of 6-7 percent over the next few years. Additionally, exports of Aroclor are expected to maintain the same ratio to the U.S. production as in the past.

Figure 1.1-2 indicates that prior to Monsanto's voluntary restriction of sales to all applications with the exception of "closed electric systems", approximately 13 percent of the PCBs in the U.S. was used in "nominally closed" applications (heat transfer, hydraulic fluids and lubricants) and 26 percent was used in "Open End" applications (plasticizers, surface coating, ink, adhesives, pesticide extenders, and microencapsulation of dyes for carbonless duplicating paper) where entries of PCBs to the environment are more probable and PCB emissions are uncontrollable. At present, almost all domestic production is being used in "closed electric systems" (transformer and capacitor applications) where PCB emissions are more controllable.

Between 1957 and 1971 there were twelve different types of Aroclor manufactured by Monsanto with chlorine contents ranging from 21 to 68 percent. Aroclor 1242 and grades lower than 42 percent chlorine made about 48 percent of the total production consumed. U.S. Sale of Aroclor 1242 has dropped drastically since 1971 and has been replaced by Aroclor 1016. Sales of Aroclor 1254 remained about the same for the period 1957 - 1974. Currently, there are four different types of Aroclor manufactured by the Monsanto Company-Aroclors 1221 and 1016 for capacitor applications and Aroclors 1242 and 1254 for transformer applications.

Past and current end-use of PCBs by types are presented in Table 1.1-4. In the years prior to 1971 the largest "open-end" use of PCBs and PCTs has been in plasticizer applications. According to Monsanto, a large percentage of the production of Aroclor 1242 and lower chlorine content grades and the entire PCT production were used for this application. Following Monsanto's

TABLE 1.1-3

PCB MANUFACTURE AND SALES

MONSANTO INDUSTRIAL CHEMICALS COMPANY

First Quarter - 1975

	(Thousands of Pounds)
U.S. PRODUCTION	8532
DOMESTIC SALES	7986
U.S. EXPORT SALES	1538
DOMESTIC SALES	
Transformer and Capacitor	7986
DOMESTIC SALES BY PCB GRADE	
Aroclor 1221	10
Aroclor 1242	2201
Aroclor 1254	2115
Aroclor 1016	3660
PREDOMINANT UTILIZATION OF AROCLORS	
Aroclor 1221, Aroclor 1016	Capacitors
Aroclor 1242, Aroclor 1254	Transformers

TABLE 1.1-4

END-USES OF PCTs AND PCBs BY TYPE

End-Use	1016	1221	1232	1242	1248	1254	1260	1262	1268	PCTs
Existing Sales										
Capacitors	XX	X		XX		X				
				through 1971						
Transformers				X		XX	X			
							through 1971			
Sales Phased-Out										
Heat transfer				X						
Hydraulics/ lubricants										
. hydraulic fluids			X	X	X	X	X			
. vacuum pumps					X	X				
. gas-transmission turbines		X		X						
Plasticizers										
. rubbers		X	X	XX	X	X			X	
. synthetic resins					X	X	X	X	X	XX
. carbonless paper				XX						
Miscellaneous Industrial										
. adhesives		X	X	XX	X	X				XX
. wax extenders				XX		X			X	XX
. dedusting agents						X	X			
. inks						X				XX
. cutting oils						X				
. pesticide extenders						X				
. sealants & caulking compounds										XX

Notes: (1) X denotes use of a given Aroclor in a specific end-use, while XX denotes principal use
(2) PCTs denote series 25,44 & 54 Aroclors

Source: Monsanto Industrial Chemical Co.

voluntary restrictions in 1972, Aroclor sales for plasticizer applications dropped to small percentage to that of the previous years. Historically, capacitors have always been the single largest PCB use category except for the years 1969-1971 when Aroclor usage for plasticizer applications was higher. The major uses of PCBs prior to 1969 in order of volume of material used is listed below:

- Capacitors
- Plasticizers
- Transformers
- Hydraulic fluids and lubricants
- Heat transfer fluids

1.2 Foreign Production and Distribution of PCBs

Known current foreign producers of PCBs are the United Kingdom, Czechoslovakia, France, Germany, Italy, Spain and the U.S.S.R. Detailed information on total production of PCBs outside the U.S. is not available. However, total foreign production of PCBs was roughly estimated by the Interdepartmental Task Force to be 80-85 million pounds annually prior to 1971. This value included 26 million pounds produced by Japan. Foreign production of PCBs has, however, decreased primarily due to Japanese action on banning the domestic production of PCBs. In 1973 foreign production of PCBs was estimated to be 43 million pounds, accounting for a 50% reduction. Production, trade and use of PCBs by OECD member countries for the year 1973 is given in Table 1.2-1. The combined PCB output of three major European producers, France, Italy and United Kingdom was about 36 million pounds in 1973. World commerce in PCBs is expected to decrease further, due to OECD member countries' activities, and to be essentially confined to capacitor and transformer applications.

1.3 Summary of Recent PCBs and PCTs Imports

A summary of estimated imports of PCBs since 1971 is presented in Table 1.3-1. Importation of PCBs appears to be steady or increasing, and currently is in the range of one percent of the domestic sales reported by Monsanto.

Table 1.2-1 - Production, Trade and Use of PCBs
OECD Member Countries (1973)

Country	Total Production of PCBs	Total Import of PCBs	Total Export of PCBs	End of Use by Category								
				Transformer Application	Capacitors (large)	Capacitors (small)	Heat Transfer System	Hydraulic Equipment	Vacuum Pump	Lubricating & Cutting Oil	Plasticizers	Others
Australia												
Austria(2)	*											
Belgium	0	?	?	1.16	0.40	-	?	?	?	?	?	0
Canada	0	2.38	0	1.98(3)	0.44(4)	0.41(4)	0	0	0	0	?	0
Denmark												
Finland	0	0.53	0	0.09(3)	0.44(4)	0	0	0	0	?	0	0
France	21.33	0.66	10.12	6.48	2.87		0.16	0.17	0.01	0.49	1.45	0.25
Germany(2)	*											
Greece												
Iceland												
Ireland												
Italy	5.55	3.53	2.44	2.70	3.14(3,4)	0	0	0	0	0	0.64(4,5)	0.16(6,8)
Japan	0	(2)	(2)									
Luxembourg												
Netherlands	0	?	0	?	?	?	?	?	?	0	0	0
New Zealand	0	0.04(9)	0	0.075	0	0	0	0	0.005	0	0.02	0
Norway(10)	0	0.04	0	0	0.05(4)	0.005	0	0	0	0	0	0
Portugal												
Spain	*											
Sweden(10)	0	0.70	0	0	0.72	0	0	0	0	0	0	0
Switzerland												
Turkey	0	0	0									
United Kingdom	8.97	0.01	6.53	0.71(3)	← 1.82(9) →							
United States	42.18	0.57	8.35	← 37.87(13) →			?	0.04	?	?	0.04(12)	?

Notes:

(1) All quantities are in million pounds
(2) Information is not available
(3) PCB containing 54 wt % chlorine
(4) PCB containing 42 wt % chlorine
(5) PCB containing 64 wt % chlorine
(6) PCB containing 70 wt % chlorine
* indicates PCB producer country
(7) "Others" refers to PCBs were used to reseller and in research
(8) "Others" refers to PCBs used as a fire-retardant in plastics
(9) This figure includes about 6 percent from previously imported material
(10) Amount reported as import and quantities quoted in usage do not agree
(11) With regards to the use of PCBs in transformers and capacitors, definitive figures are not available
(12) Used in investment casting
(13) This figure includes 0.13 million pounds of imported material

Table 1.3-1

Preliminary Summary of PCBs Import Data for
1971-75 Versus Monsanto Production and Sales Data

	Year or Portion of Year				
	1971	1972	1973	1974	1975
Estimated Imports (lb)	550,000	700,000	480,000	450,000	450,000 (6 mos)
Monsanto Domestic Sales (lb)	34,301,000	26,408,000	37,742,000	34,406,000	7,986,000 (3 mos)
Imports as Percentage of Domestic Sales	1.6	2.7	1.3	1.3	-
Monsanto Exports (lb)	-	6,388,000	8,346,000	5,395,000	1,538,000 (3 mos)
Ratio of Exports to Imports	-	9.1	17.3	13.5	-

During 1971 and 1972 most of the PCBs imported into the United States originated in Japan, ostensibly corresponding to sales of stocks unsalable in Japan due to pending or established regulatory action. There apparently has been little or no U.S. importation of PCBs from Japan since 1972. The major importer was Marubeni America Corp., West Caldwell, N.J.

Since 1972, most of the imported PCBs originated in Italy, with a small amount imported from France (manufactured by Prodelec). This French material is similar to Aroclor 1242 and is used (40,000-60,000 lb. per year) as a coolant in mining machinery by Joy Mfg. Co., Franklin, Pa. Decachlorobiphenyl (Fenclor DK) is imported from Italy by Yates Mfg. Co., Chicago, Ill., for use in the manufacture of investment casting waxes. Estimated current usage is about 400,000 lb/year.

Polychlorotriphenyls, also used in pattern wax formulations, appear to be imported at an increasing rate. Estimated amounts are:

1973	1974	1975 (6 mos.)
160,000 lb.	330,000 lb.	200,000 lb.

Major importers of PCTs are Progil, Inc. (formerly Prochimie) and Intsel Co., both located in the New York City area. Most of the imported PCTs originate in France (Prodelec).

Use of PCBs and PCTs in casting waxes appears to be generally stable or increasing slowly, and under conditions of lack of regulatory control in the future, such use would be expected to continue at least at the current rate. On the other hand, Joy Mfg. Co. no longer manufactures mining equipment using PCBs as coolant; the amounts imported by Joy are used to service existing equipment. However, since Joy imports only 10 to 20 percent of the total, the overall imports will not be affected greatly by future decreases in imports by Joy.

2.0 FIFTEEN YEAR EXTRAPOLATIONS FOR PCB PRODUCTION AND USE IN ELECTRICAL EQUIPMENT

The subject data base was assembled from domestic sales figures for Aroclors reported by Monsanto — capacitor and transformer sales being summed

to obtain totals. For certain years (1972-1973), sales data were reported in aggregate, and in such cases, the reported figures were taken as totals, and usage breakdown was accomplished by assigning total amounts of Aroclor 1221 and 1016 to capacitors and total amounts of Aroclor 1242, 1248, 1254, and 1260 to transformers. All 1975 totals were obtained by quadrupling the reported first-quarter sales figures - a process which very likely yields an approximate lower-bound to the actual yearly totals - and, ultimately, Table 2-1 was constructed.

Manifestly, the available data base is far too limited to form the basis for any rational statistical analysis. The strong pertubational decrement in the 1971-1972 interval precludes the application of incremental regression — even if a fifteen-year extrapolation were not required. In short, then, trend analysis becomes a generally risky proposition, and the optimum analytical approach seems to be limited to unbiased extrapolations of least-square linear fits to grouped subsets of the available data points.

Given this, three data base subsets appear promising:

(i.) the full base — using all reported and 1975-estimated data, unweighted and unbiased;

(ii.) a singly-deleted base — using all reported data, but eliminating the 1975 estimates. This tends to weight the extrapolations (however weakly) with regard to recent (last-decade) performance only, but the resulting curves can then be inspected without the bias of the estimated 1975 totals; and

(iii.) triply-deleted base — formed by extracting the depressed 1971 and 1972 totals from the singly-deleted base. This construction eliminated the bias of the 1975 estimates, and discounts the effects of the interval decrements caused by regulatory effects. (A perhaps more realistic picture might be obtained by placing a decremental weight on 1975 totals — under the assumption that some of the roll-back is reactively

Table 2-1

Total PCB Breakdown by Use
1966 - 1975

Year	Total (10^6 lbs.)	Capacitors (10^6 lbs.)	Transformers (10^6 lbs.)
1966	37.794	28.884	8.910
1967	40.774	29.703	11.071
1968	41.135	29.550	11.585
1969	37.127	25.022	12.105
1970	40.536	26.708	13.828
1971	25.275	14.141	11.134
1972	25.656	20.321	5.335
1973	37.742	23.566	14.176
1974	34.406	22.000	12.000
1975 (est.)	31.944	20.644	11.300

induced by the strong depression in the 1971-1972 totals. This would result, however, in externally biased extrapolations, and justifying a long-term lag of such effects with the available data appears difficult.)

These data bases, and the unbiased, least-square linear extrapolations derived from them, are graphed in Figure 2-1. Inspection of the curves shows that the 1975 estimate has little effect on the aggregate total; an event readily accounted for by noting that the singly-deleted base has the effect of depressing the capacitor total only slightly more than it elevates the transformer total. The triply-deleted base, however, provides almost no perturbation to the transformer total derived from the full base. Inspection of the curves for the aggregate total and the capacitor total indicate that this arises from the fact that the ratio of their time-derivatives (slopes) for the triply-deleted base is almost equal to its value with the full base.

Generally, the developed extrapolations disagree with mid-1975 industry estimates for the near-term future. Apparently, Monsanto and capacitor manufacturers tend to expect 1975 totals to resemble 1974 totals, followed by a five to ten percent increase in 1976, and a general four to five percent increase over the preceding year for 1977 on. Obviously, increases by a fixed percentage over preceding years yields exponentially increasing totals – an event undoubtedly strongly desired, but probably wholly utopian. Transformer manufacturers appear to tend toward a more conservative view; General Electric for example, expecting the demand for power transformers to rise and the demand for distribution transformers to fall – probably yielding a general saturation of the sales figures when integrated over all types.

Taking the available information into consideration, the impression remains that the triply-deleted data bases probably provide the most likely picture of what might be expected over a 25-year term. Naturally, such scenarios assume the external *status quo* as constant; technological, economic, and regulatory factors being capable of producing strong (and unassessable) variations in usage patterns. As a matter of fact, very recently, Monsanto has publicly announced that they would support a cessation of the PCB production when suitable alternative materials become available.

Figure 2-1. Unbiased Extrapolations of Least-Square Linear Curves for PCB Production and Use in Electrical Equipment

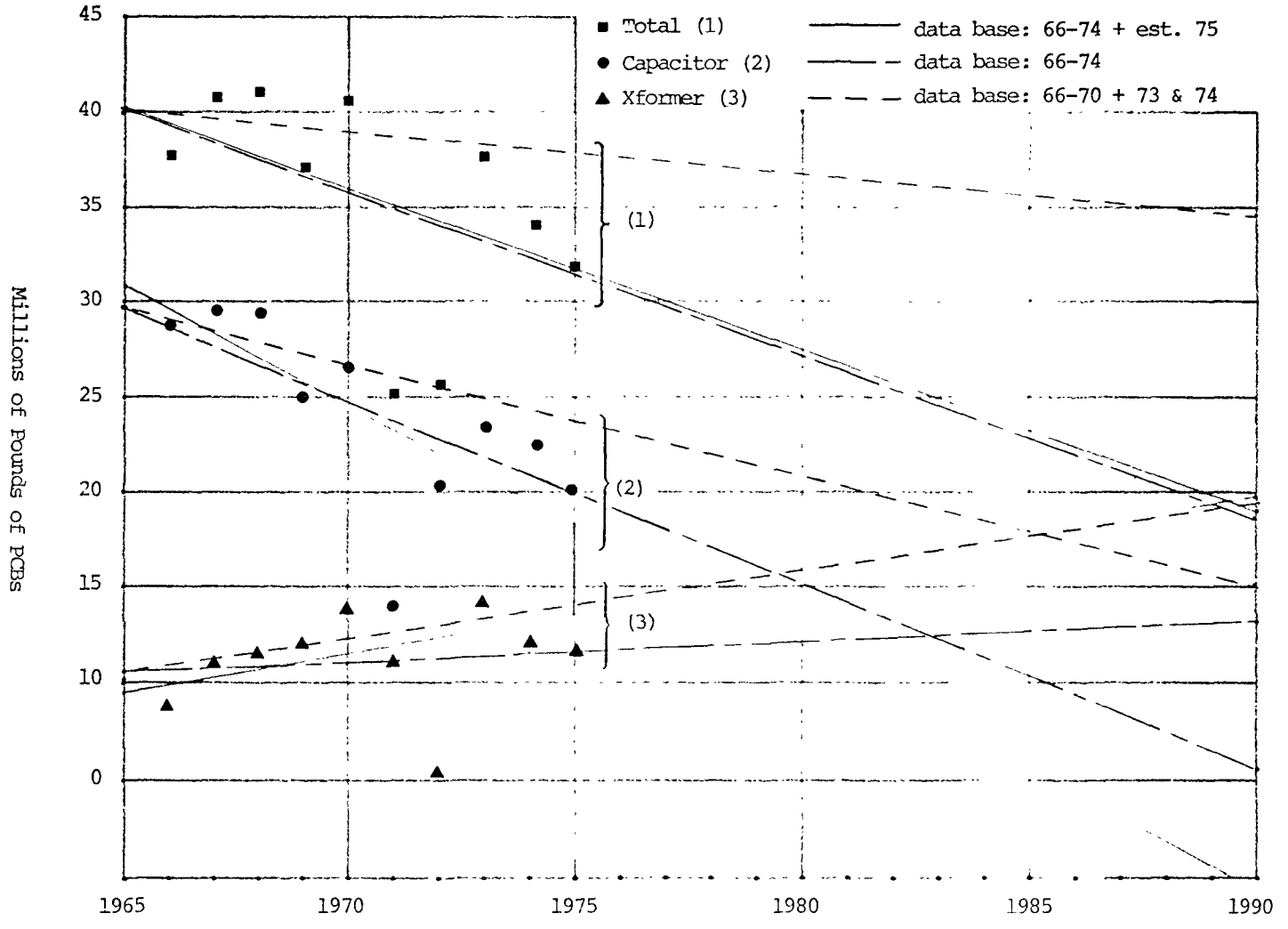

3.0 OVERALL MATERIAL BALANCE

Three separate approaches have been taken to obtaining overall data on total PCBs production, historical usage, and current distribution in the environment. Most of the uncertainty lies in the period 1930-1960, for which Monsanto data are lacking. Use of PCBs in transformers, particularly in electrical distribution systems, apparently began almost simultaneously with commercial production. Extensive use in capacitors can be traced to the intensive development and use of electrical home appliances, starting in the mid to late 1940's. Use in adhesives, paper, lubricants, etc., probably began in the early 1950's, and use of PCBs as a heat transfer fluid began early but increased rapidly between 1950 and 1970.

Using the Monsanto production data for 1960 to 1975, and assuming a linear increase in total PCBs production between 1930 and 1960, we obtain:

Production 1960 - 75	850×10^6 lb
Production 1930 - 60 (30 yr × 19 × 10^6 lb/yr ave)	570×10^6 lb
Total	$1{,}420 \times 10^6$ lb

Estimates of total PCBs usage by U.S. industries for the period 1930 - 1975 are given below:

PCBs by use category	
Capacitor & transformers	965×10^6 lb
Heat transfer	20×10^6 lb
Hydraulics/lubricants	80×10^6 lb
Misc. industrial	27×10^6 lb
Carbonless copying paper	45×10^6 lb
Other plasticizer uses	115×10^6 lb
Petroleum additives	1×10^6 lb
Total from Monsanto	$1{,}253 \times 10^6$ lb
Estimated total U.S. imports of PCBs	3×10^6 lb
Grant total PCBs usage	$1{,}256 \times 10^6$ lb

Alternatively, we have fitted least square correlations to each of the sets of Monsanto sales data for various uses, and to the domestic sales data set from 1957 to 1974, projected each plot back to 1930, and integrated. These operations, plus the addition of several other well established data points, produce the following results:

Total Domestic Sales, 1930 - 1970	767×10^6 lb
Domestic Sales, 1971 - 1975	168×10^6 lb
Total Exports, 1963 - 1974	82×10^6 lb
Estimated Exports, 1930 - 1963; 1975	70×10^6 lb
Monsanto In-House Use (unreported as sales)	25×10^6 lb
Total	$1,112 \times 10^6$ lb

As a comparison with the above, the 1973 Foster D. Snell study of PCBs concluded that the upper bound of U.S. usage of PCBs over 1934-72 was 1.175×10^9 lb. Adding usage figures for 1973-75 (about 105×10^6 lb), plus 150×10^6 estimated total exports, one obtains:

Estimated Total U.S. Production to Date	1.43×10^9 lb
Estimated Total U.S. Usage to Date	1.28×10^9 lb

Thus, it appears that the approaches taken to obtaining overall production and use quantities from various types of estimates yields:

U.S. Production	
Maximum	1.4×10^9 lb
Minimum	1.1×10^9 lb
U.S. Usage	
Maximum	1.25×10^9 lb
Minimum	1.0×10^9 lb

Sufficient data have been generated to allow an approach to the usage quantity through estimated quantities now in use or in the environment:

Transformers - 135,000 in service x 2,250 lb/unit average content	300×10^6 lb
Power Capacitors - 5×10^6 in service x 36 lb/unit average content	180×10^6 lb
Industrial Capacitors - 790×10^6 in service × 0.35 lb/unit average content	270×10^6 lb
Total in Electrical Service	750×10^6 lb
Total Other Than Electrical	8×10^6 lb
Grand Total	758×10^6 lb
Estimated "free" PCBs in the environment (see Section IX)	150×10^6 to 175×10^6 lb
Estimated amount degraded or incinerated (20×10^6 lb. by contract incineration; 5×10^6 lb incinerated with sewage sludge and other solid wastes; and 30×10^6 lb degraded mono and dichloro homologs) -	55×10^6 lb

Estimated amounts to landfill or dump:

Ten percent of capacitor and transformer usage as production wastes - $1.06 \times 10^9 \times 0.10 =$	110×10^6 lb
Obsolete electrical equipment (capacitors mainly) -	80×10^6 lb
Other sources (paper, plastics, etc.) -	100×10^6 lb
Estimated total	290×10^6 lb

In summary:

Amount in use	758×10^6 lb
Amount in landfills	290×10^6 lb
Amount "free" in soil, water, air, sediment	150×10^6 lb
Amount degraded or incinerated	55×10^6 lb
Total	$1,253 \times 10^6$ lb

Thus, using estimates, we can account for the maximum usage of 1.25×10^9 lb. calculated previously. We believe that the ranges of production and usage are well-defined by the maximum and minimum values presented above, and that the accuracy of the maximum values are sufficient for use in gross calculations pertaining to the PCBs problem.

BIBLIOGRAPHY

1. Colder, A.W., (Joy Manufacturing Co., Pittsburgh, Pa.), Personal Communication, September 8, 1975.

2. Environmental, Directorate, Organization for Economic Cooperative and Development, General Information on PCB Monitoring and Control, Paris, September 11, 1974.

3. Foster D. Snell, Inc., Market Input/Output Profile, Process Technology Assessment and Entry Into the Environment of Polychlorinated Biphenyls, EPA Contract 68-01-2106, December, 1973.

4. Leisy, A.E. and Smull, W. (Monsanto Industrial Chemical Co.), Personal Communication, October 8, 1975.

5. Papageorge, W.P. (Monsanto Industrial Chemical Co.), Personal Communication, August 22, 1975.

6. Polychlorinated Biphenyls and the Environment, Interdepartment Task Force on PCBs, Washington, D. C., May, 1972.

7. Solomon, P. (Yates Manufacturing Co., Chicago, Illinois), Personal Communication, August 8, 1975.

SECTION VIII

SUBSTITUTES FOR PCBs

1.0 INTRODUCTION

In 1970, the Monsanto Company announced a voluntary restriction on sales of PCBs for all but closed electrical applications. As a result of this action, since 1972 the use of domestically produced PCBs has been limited to the manufacture of electrical capacitors and the manufacture and maintenance of electrical transformers.

Satisfactory substitutes have been developed for all of the other previous uses of PCBs except in the manufacture of investment casting wax. Imported PCBs have been the sole source of material for this application. There are no complete data available on imports; however current aggregate information indicates that PCB imports are about one percent of domestic production.

A number of materials are currently being developed as substitutes for PCBs. The replacement of PCBs by any of these materials will depend on the specific technological, economic, and institutional requirements which govern each specific application. The evaluation of the substitutes must be based on careful consideration of all of these factors as they apply to each specific application where PCBs are currently being used.

2.0 ELECTRICAL CAPACITORS

An electrical capacitor is a device which stores electrical energy when a voltage differential is applied across the device. This stored energy reappears in the circuit as the voltage is decreased. The capacitor therefore performs an electrical function equivalent to that of a spring in a mechanical system. The amount of electric charge (q) which a specific capacitor can store

is a function of its size, or capacitance (c), and the voltage (v)

$$q = cv \tag{1}$$

and the energy stored in the capacitor (w) is a function of the capacitance and the square of the voltage:

$$w = \tfrac{1}{2}cv^2 \tag{2}$$

This energy is stored in the capacitor in the form of an electric field and in the dielectric material which is exposed to that field.

2.1 Function of the Dielectric Material

When a material is placed within an electric field there is a tendency for the charges associated with the constituent molecules of the material to move in the direction of the field (the positive charges move in the direction of the applied field, the negative charges in the opposite direction). If the material is a conductor, the mobile charges, usually electrons, will move freely under the influence of the field and a current is said to flow. However, if the material is a non-conductor, the applied electric field will cause a spatial displacement of the charge centers of the constituent molecules, with the result that surface charges will be induced on the material. The charge on opposite faces of the material will be opposite in sign and will generate an electric field within the material opposing the applied field. Such a material is known as a dielectric and is characterized by a parameter defined as the ratio of the electric field that would exist in that space if the medium were replaced by vacuum to that actually found within the dielectric - this parameter is referred to as the dielectric constant. The dielectric constant of most materials, at least at low frequencies, is greater than unity.

Since the effect of an applied electric field on a dielectric medium is the generation of a surface charge, it is clear that work must be done in the separation of these charges. Clearly, the larger the applied electric field, the larger the surface charge, and conversely, when the electric field is removed, the surface charge is zero. The energy that is required to establish the necessary surface charge is stored within the dielectric and can in most cases be recovered without loss by removing the external electric field.

In practice, the external electric field is established by applying electrical charges to a pair of metal plates placed on the opposite surfaces of the dielectric. Although the geometry of the conductor-dielectric sandwich can take a wide variety of forms, the specific geometry that is of most interest is that in which conductors are parallel plates separated by the dielectric. In this case the capacitance of the device is given as

$$C \propto \frac{eA}{d} \tag{3}$$

where e is the dielectric constant, A the area of each plate and d the spacing (the thickness of the dielectric).

As is stated above, the magnitude of the surface charges that are formed on the dielectric increases as the applied electric field increases. Eventually, the external electric field may become sufficiently strong to rupture the bonds that hold together the charges on the individual constituent molecules with the result that the dielectric breaks down; i.e., conducts current. The critical voltage (V_c) for a specific capacitor is

$$V_c = E_c d \tag{4}$$

where E_c is the dielectric strength, i.e. the maximum potential gradient (voltage) that the dielectric can sustain without rupture. Clearly, the dielectric constant and the critical voltage, or dielectric strength, are essentially unrelated.

The critical voltage of the dielectric material can impose severe limitations on the maximum voltage at which a capacitor can operate. The electric field strength in a capacitor is strongest at sharp edges and points caused by surface roughness and the edges of the conductive plates. If the electric field at these points exceeds the critical voltage of the dielectric, a corona discharge can occur which results in current leakage and heating of the capacitor and causes chemical degradation of the dielectric material. This critical voltage for corona discharge depends on both the geometry of the capacitor and the properties of the dielectric, and is known as the corona inception voltage. Air has a rather low dielectric strength; the presence of air bubbles in the dielectric will result in corona discharges if the capacitor is operated at applied voltages above about 270 volts.

When several capacitors, say C_1 and C_2, are connected in parallel, then the voltage across each is the same, V, while the charge on the capacitors is $Q_1 = C_1V$ and $Q_2 = C_2V$; hence the capacitance of the parallel combination is given as

$$C_t = C_1 + C_2 \tag{5}$$

On the other hand, if the two capacitors were connected in series, then the charge, Q, would be the same for each. In this case, the respective potentials would be given as $V_1 = Q/C_1$ and $V_2 = Q/C_2$, with the result that the total capacitance is given as

$$1/C_t = 1/C_1 + 1/C_2 \tag{6}$$

From the above considerations it can be seen that the effect of a small hole through the dielectric will be to produce a very small reduction in the overall capacitance, since the resulting structure may be considered as two capacitors, one with the normal dielectric, the other with air dielectric, in parallel. On the other hand, the breakdown strength of air is considerably less than that of most practical dielectric materials, so that the effect of such a discontinuity in the dielectric will primarily be in reducing the critical voltage of the resulting structure.

On the other hand, the effect of a gap between the dielectric and the plates is more serious since the resulting structure will act as if it were made up of several capacitors in series. From Eq. (6), it can be seen that the smallest capacitor in a series circuit will determine the total capacitance of the structure. Thus, a gap between the plates and the dielectric will have the effect of reducing the capacitance without a reduction in the dielectric strength.

In most practical devices, the assumption that the sole effect of the dielectric is the reduction of the internal electric field by the induction of surface charges is not entirely correct. In all such practical cases, there is a leakage current that flows through the dielectric. This leakage current produces heat within the dielectric. This leakage is very small in useful dielectrics, but the heating effect is not always

negligible. An additional dissipative process results when the dipole moment induced within the molecules of the dielectric is not exactly in phase with the inducing electric field. In those cases where in the constituent molecules have a permanent dipole moment, i.e. water, the inability of the orientation processes to follow the changes in the applied field becomes the dominant energy dissipation process; this is the basis of dielectric heating.

The combination of the mechanism by which energy is dissipated within the dielectric is called the loss-tangent; the smaller the loss-tangent, the smaller the energy loss within the dielectric and hence the better the capacitor.

2.2 Practical Capacitors

In its simplest form, a capacitor is a pair of metal plates separated by a dielectric material. Depending on the application, a great variety of structures have been used ranging from parallel plate mica or glass dielectrics for very small capacitors, through tantalum-tantalum oxide-tantalum structures which have very large capacitances with very low operating voltage ratings. The capacitors which use PCBs as the dielectric material have capacitance values in the range of a few tenths to tens of microfarads and are usually spiral wound of two thin aluminum foils and two paper spacers. To illustrate the utility of spiral winding, a 0.5 mfd capacitor made of two layers of aluminum foil 2.5 inches wide by 0.0005 inches thick and alternate layers of paper (dielectric constant = 2) 0.001 inches thick, would have a diameter of only 0.9 inches, whereas, in the plane parallel configuration, the structure would be 2.5 inches by 220 inches. Incidentally, taking the dielectric strength of the paper to be of the order of 500 kv/cm, the voltage rating of the above example capacitor would be about 1250 volts.

The manufacturer of spiral would metal/paper capacitors must avoid the presence of small imperfections in the paper dielectric and must insure complete and reliable matching of the metal foils to the surfaces of the paper. As an alternative to the requirement of very high quality control of the paper and of the forming process, it has been found to be cost effective to evacuate the spaces within the wound capacitor and to subsequently fill

the voids with a suitable liquid dielectric material prior to sealing the completed unit. This liquid displaces any air which may be left in the capacitor, thereby raising both the dielectric constant and the critical corona inception voltage.

2.3 Required Properties of Dielectric Liquid

The properties that are essential for the liquid dielectric can be described in terms of the functions that the liquid must fulfill:

- Electrical Properties - Should have a dielectric constant at least as large as that of the solid dielectric spacer, and a dielectric strength at least as high as that of the solid dielectric. The liquid must have a low loss factor to assure electrical efficiency and a high resistance to the formation of corona discharges.
- Physical Properties - Must be liquid at a suitable temperature to allow processing of the capacitor. Further, it should be liquid over the operating temperature range of the resulting capacitor with a sufficiently small coefficient of thermal expansion so as to fulfill its function over the entire temperature range. Must have a boiling point sufficiently elevated to ensure that the vapor pressure at the maximum operating temperature of the capacitor does not cause rupture of the container.
- Chemical Properties - Must be chemically compatible with the solid dielectric material and with the metal plates. Specifically, the dielectric liquid must wet both the plates and the solid dielectric without altering either material chemically or physically over the entire operating temperature range. The dielectric liquid must also be chemically stable at elevated temperatures and in the presence of intense electric fields so that its properties do not change over time.

- Flammability - Should be non-flammable and produce no flammable breakdown products if electrical arcing occurs within the capacitor.
- Cost and Availability - Should be inexpensive and readily available with well defined and standardized properties.
- Toxicity - Should be non-toxic and its possible breakdown products should be non-toxic.
- Environmental Persistence - Should be environmentally degradable and non-bioaccumulating.
- Legislative Acceptability - Must be acceptable under the laws of the U.S. and of all other countries to which capacitors are exported. Should be acceptable under the relevant electrical codes which govern the use of capacitors.

2.4 The Use of PCBs in Capacitors

PCBs have been the standard dielectric liquid used in almost all liquid-filled capacitors since 1929. Prior to 1952 the liquid used in capacitors was Aroclor 1254 (54 percent chlorine); it was then replaced by Aroclor 1242 (42 percent chlorine), which has better electrical properties. In September 1971, Monsanto introduced a new capacitor liquid, Aroclor MCS-1016, which is a modified Aroclor 1242. This material is the standard against which the properties of any other proposed capacitor dielectric fluid must be compared.

2.4.1 Properties of PCB Capacitor Dielectric Liquid[1]

The relevant properties of Aroclor 1016 are as follows:

- Electrical Properties

dielectric constant (ASTM D-150-47T)	5.85 (25°C)
dielectric strength (ASTM D-149-44)	>35 KV
resistivity (ASTM D-257-46)	$>500 \times 10^9$
loss-tangent (Dissipation factor-ASTM D-150-47T)	0.0025

- Physical Properties

melting point (pour point)	$-19^{\circ}C$
viscosity at $100^{\circ}F$	71-81 SUS
boiling point	$325-366^{\circ}C$
specific gravity ($25^{\circ}C$)	1.362
coefficient of thermal expansion	.00068 $cc/cc^{\circ}C$

- Chemical Properties

corrosiveness: liquid - noncorrosive
breakdown products - corrosive

solvency: high, but satisfactory materials have been developed

stability (max. service temp.) $95^{\circ}C$

- Flammability

liquid (Cleveland open cup flash point): $141^{\circ}C$

breakdown products: nonflammable (primarily HCl and carbon)

- Cost and Availability

cost $5.14/gallon

availability - no problem

- Persistance

  environmental - very persistent

  % biodegradation (48 hour activated sludge) $33 \pm 15\%$[2]

  bioaccumulating - very

- Legislative Acceptability

  banned in Japan, essentially banned in Sweden

2.4.2 Advantages and Disadvantages of PCBs in Capacitors

Aroclor 1016 has a relatively high dielectric constant of 5.85 which is well matched to the dielectric constant of 6.10 of the paper used in capacitors. This mixture of PCBs is chemically very stable, even in the presence of high temperatures and intense electrical fields. It is probable that some slight dechlorination of the PCB occurs during the long term operation of capacitors. The resulting HCl would lower the dielectric strength of the PCB. However, the Aroclor 1016 used in capacitors usually contains a few tenths of one percent of a chemical scavenger (usually an organic epoxide) which reacts with any HCl which is formed, and thereby extends the life of the capacitor.

The only major problems associated with the use of PCBs are their extreme environmental persistence and chronic toxic properties which are made more severe by the high degree of bioaccumulation which occurs in the environment. The recent restrictions imposed by the governments of Japan and Sweden on the use of PCBs in those countries will require that a suitable substance be developed for use in electrical equipment which will be exported.

2.4.3 Usage of PCBs in Capacitors

The General Electric Co. reports that approximately 100 million PCB type capacitors are produced annually in the U.S. with a value of 140 million dollars, most of them for first-time use.[3] Total annual PCB requirement for capacitor manufacturing is 21 million pounds, about 50 percent of which is used in large power factor correction capacitors.

Capacitors used in lighting and air conditioning applications contain 0.005 to 0.09 gals. (0.05 to 1.0 lbs.) of PCBs. The largest power capacitors contain about 6.7 gals. (77 lbs.) of PCBs. The most popular size contains about 3.1 (36 lbs.). The National Electrical Code requires that any installation of capacitors in which any single unit contains more than 3 gallons of combustible liquid shall be in a vault like that required for transformers.[4]

The life expectancy of capacitors exceeds 10 years for lighting applications and more than 20 years in electric utility power transmission application. Although capacitors are considered long-lived products, they could fail due to poor process control, materials quality and misapplication. According to G.E., existing PCB capacitors have been developed to the point that failures are considered essentially negligible. In each application, the first-year failure rates are less than 0.2 percent. This level of life and reliability had not been achieved prior to the introduction of PCBs. Furthermore, the relative non-flammability of askarels significantly reduces the fire hazard that might otherwise accompany those failures that result in rupture of the case. Capacitors are not rebuilt and returned to service after failure. They are disposed of and replaced by new capacitors.

2.5 Alternatives to the Use of PCBs in Capacitors

There are two main approaches that might be adopted in the development of substitutes for the PCBs in capacitor applications, (a) a straightforward replacement of PCBs that would require minimal alternation of the present production techniques; and (b) the introduction of new production techniques designed to eliminate the need for a liquid dielectric. In either case, the alternative solution must be significantly less environmentally distressing than the currently used PCBs.

2.5.1 Substitutes for PCBs

So long as the present method of construction of capacitors is used, the dielectric liquid is required and must necessarily satisfy the physical, chemical, and toxicity requirements at least as well as do PCBs. These requirements can be relaxed only in conjunction with a more or less severe restriction on the maximum operating temperature of the capacitor. On the other hand, some sacrifice in the dielectric constant and dielectric

strength would be possible by increasing the dimensions of the capacitors. In many applications this increased size would be troublesome, but not so serious as to be impractical. Further, there are some applications in which the non-flammability of the dielectric liquid and of its possible breakdown products could be somewhat sacrificed. Finally, the cost factor could be considerably relaxed.

A number of compounds are being developed as replacements for PCBs in capacitors. The following list of compounds must all be considered as possible substitutes for PCBs in at least limited applications.

2.5.1.1 Phthalate Esters:

2.5.1.1.1 Dioctyl Phthalate: (DOP)

Current status:
Used in capacitors in Japan. Used by General Electric Co. under the trade name "Econol" in capacitors manufactured for export to Japan.

Advantages:
Price: one-half that of PCB.
Availability: Widely used as a plasticizer for PVC.
Dielectric Constant: 5.3; similar to PCB.

Disadvantages:
Chemical stability: capacitors are limited to 85°C max. vs 95°C max. for PCB.
Corona inception voltage: lower than PCB.[5]
Flammability: Flash point is relatively high (220°C) but more flammable than PCBs.
Toxicity: Suspected carcinogen. Extensive additional testing is required.[5]

2.5.1.1.2 Diisononyl Phthlate:

Current status:
Currently being tested by Exxon Chemical under the trade name "Enjay 2065".[6]

2.5.1.4 Silicones

Current status: Developmental work is being done in the U.S. by Dow Corning Co. No information is currently available, but Dow Corning has indicated that a formal announcement will be made late in 1976.[10]

2.5.1.5 Diaryl Sulfone

Current status: The Monsanto Company has been conducting extensive tests with a proprietary dielectric liquid trade named "MCS-1238".[2] Detailed chemical information is not currently available on this material; however, an example cited in German and U.S. patent disclosures is a mixture of tolylxylyl sulfone, isopropyl biphenyl, and minor ingredients which may be antioxidants. Complete information has been promised by Monsanto for the late first quarter of 1976.

Advantages: (MCS-1238)
Dielectric constant: 6.0
Corona inception voltage: similar to PCB.
Biodegradation (48 hour activated sludge): 70% $\pm$ 10%.
Bioaccumulation: does not concentrate in food chain.
Toxicity: Rat oral LD_{50} = 3.8 g/kg. Rabbit dermal LD_{50} - 5 to 8 g/kg.

Disadvantages: (MCS-1238)
Flammability: more flammable than PCBs.
Chronic toxicity: lack of data.

2.5.2 Elimination of Dielectric Liquids in Capacitors

Because of the complex and strongly interacting requirements on a liquid dielectric material, there is considerable interest in the development of capacitor designs which do not require a liquid dielectric. The rather advanced technology involved in the production of very thin plastic films of very high physical integrity, such as is required in many food packaging applications, has opened the way for the production of plastic

films of suitable dielectric constant and dielectric strength for capacitor applications. The parallel development of methods for the deposition of thin, carefully controlled metallic films on non-conducting surfaces, such as is widely practiced in the semiconductor industry, suggests that the use of a liquid dielectric material could be circumvented by metallic films deposited onto suitable plastic substrates. The resulting metallized film can be spirally wound into useful capacitors. The essential problems associated with this approach, aside from the development of suitable high speed processing equipment, lie in the selection of a plastic substrate that is tractable but also stable at sufficiently high operating temperatures, and in the complete elimination of air from the capacitor. An additional problem with this approach lies in the nature of the polymers that have been studied; nearly all of the suitable materials are themselves flammable and so are their probable breakdown products.

A number of different plastic films are used in low voltage DC capacitors. Most of these materials exhibit a relatively high loss-tangent (dissipation factor) which results in over-heating when subjected to an alternating electric field. Only polypropylene has a loss-tangent sufficiently low so that it can be used in AC capacitors, and the dielectric constant of this material is about 2.2 (vs 5.85 for PCB).

The polypropylene film that is used in capacitors is considerably thinner than that used for packaging and decorative applications. There is no current source of satisfactory capacitor grade polypropylene film in the U.S. The technology for metallized polypropylene film capacitors comes from Pye TMC of England which is partially owned by Philips. Representatives of this company have approached most major U.S. manufacturers. Currently, this technology has been purchased by one U.S. manufacturer at a cost of four percent of their capacitor sales for the life of the technology usage. The failure rate of the dry film capacitors is reported to be 20 times that of PCB filled capacitors, primarily due to corona discharges into air that is trapped in the dielectric layers. Present efforts on dry film type capacitors are directed toward the development of a suitable capacitor design. Polypropylene capacitors are widely used in Europe at voltages up to 250 volts. Capacitors suitable for U.S. applications are not expected for 3 to 5 years.

2.6 The Use of PCB Capacitors in Electrical Equipment

Each of the specific uses of PCB capacitors imposes special requirements on the performance of the capacitor and on the properties of the dielectric liquid. The evaluation of the various substitute liquid dielectrics and of the dry capacitor designs must be based on the suitability of the resulting capacitors for each of these uses.

2.6.1 Power Factor Correction

The largest use of PCB filled capacitors is to increase the efficiency of electrical power distribution by correcting for the power factor of inductive machinery such as industrial motors, induction furnaces, and fluorescent light transformers. In general, the load imposed on a power line by these electrical devices is not purely resistive, but is also partly inductive. The voltage drop (V_L) across such an inductor is proportional to the rate of change of current through the device; hence

$$V_L = -L \frac{di}{dt} \tag{7}$$

where the negative sign expresses the reaction of the inductance (L) to a change in current (i) through the inductance. If the current is expressed in the form

$$i = i_o e^{j\omega t} \tag{8}$$

where $j \equiv \sqrt{-1}$, $e^{j\omega t} = (\cos \omega t - j \sin \omega t)$, $\omega = 2\pi f$, $f \equiv$ frequency.

Then

$$V_L = j\omega L \, i = Z_L \, i \tag{9}$$

where Z_L is the inductive reactance given by

$$Z_L = j\omega L \, . \tag{10}$$

On the other hand, for a capacitance (c), the potential difference

$$V_c = \frac{Q}{c} = \frac{\int i\,dt}{c} = -\frac{1}{j\omega c}\ i \tag{11}$$

where Q is the electric charge on the plates of the capacitor. Hence, the capacitive reactance Z_c is given by

$$Z_c \equiv -\frac{1}{j\omega c}\ . \tag{12}$$

If a series circuit containing inductive (L), capacitive (c), and resistive (R) elements has a potential difference $v = v_o e^{j\omega t}$ across it, the relation between current and applied potential difference is given by

$$Ri + L\frac{di}{dt} + \frac{1}{c}\int i\,dt = V_o e^{j\omega t} \tag{13}$$

A solution of this equation is in the form

$$i = i_o e^{j(\omega t + \theta)} \tag{14}$$

where θ is the phase difference between the applied potential difference and the resulting series circuit current. On substitution of the assumed solution into the differential equation (13), one finds

$$(j\omega L + R - \frac{j}{\omega c})\ i = V \tag{15}$$

which is, in the general (Ohm's Law) form,

$$Z\,i = V \tag{16}$$

where

$$Z \equiv R + j(\omega L - \frac{1}{\omega c}) = |Z|\ e^{j\phi} \tag{16'}$$

where

$$|Z| \equiv \sqrt{R^2 + (\omega L - \frac{1}{\omega c})^2} \tag{16''}$$

and

$$\phi = \tan^{-1} \left(\frac{\omega L - \frac{1}{\omega c}}{R} \right) \qquad (16''')$$

and, in order to satisfy Eq. (16)

$$\theta = -\phi \ . \qquad (17)$$

The power dissipated in a series R, L, c circuit is given by

$$P = \frac{1}{T} \int_{o}^{T} VI \, dt \qquad (18)$$

where T is the period $\equiv \frac{1}{f}$

which, on integration, yields

$$P = I_o V_o \cos \phi \qquad (19)$$

where ϕ is the phase angle given by Eq. (16''').

The importance of the phase angle is best described by noting that electrical power is generated in such a manner that the voltage and current are in phase, i.e. $(\cos \phi)_{generation} \equiv 0$.

Hence

Power generated - power consumed = Power losses in transmission

$$V_o I_o - V_o I_o \cos \theta = V_o I_o (1 - \cos \theta) = \text{power loss due to unfavorable phase angle} \qquad (20)$$

Since the voltage is fixed and $\cos \theta \leq 1$, the transmission line current must be increased in order to supply the load when there is a lagging phase angle. However, the resistive losses in the transmission lines are proportional to the square of the current transmitted. Therefore,

efficient transmission of electrical energy requires that the net phase angle, or power factor, of the load be as close to unity as possible. This power factor correction is achieved by the introduction of a capacitor in series with the inductive load at the load end of the line.

The function of a capacitor in such a circuit can perhaps be better understood by examining the interchange of electrical energy among the various components of the circuit. In an inductive device, such as a motor or a fluorescent light, which is subjected to an alternating current, a considerable amount of energy is stored in the form of a magnetic field and then returned to the circuit in the form of current when the voltage decreases. In a purely inductive circuit, this current is transmitted back to the generator and is lost in the form of heat in the transmission lines. The energy required to form the magnetic field during the next cycle must then be supplied by the generator. If a capacitor is placed in the circuit near the inductive load, the energy from the collapse of the magnetic field is stored in the capacitor in the form of an electric field when the voltage decreases, and then is transferred back from the capacitor to the inductive device to reform the magnetic field during the next cycle. Since the energy to form the magnetic field is transferred between the capacitor and the inductive device, it does not appear in the transmission lines. This decreases both the heat losses in the transmission lines and the amount of energy required from the generator.

The capacitor used for power factor correction functions as a temporary storage device for electrical energy. It is important that the energy losses be minimized, implying a low loss-tangent for the capacitor and a minimum distance between the capacitor and the inductive device. The other physical and electrical properties of the capacitor are a function of the particular application. There are three general types of power factor correction capacitors: high voltage power, low voltage power, and lighting ballast capacitors.

2.6.1.1 High Voltage Power Factor Capacitors

Power factor correction can be furnished by the electric utility by installing capacitors at substation locations. These capacitors are designed to operate at high voltages of 4800 to 13800 volts, and are manufactured in a size range from 15 kvar to 200 kvar. Each capacitor contains about 2 to 2½ gallons of PCBs, most of which is trapped in the porosity of the paper dielectric. These capacitors are generally installed in banks in a substation or mounted in groups on utility poles.

The failure rate of high voltage power factor capacitors is approximately .3% per year. These capacitors are usually protected by fuses so that the failure of one capacitor in a bank will not cause failure of other capacitors. Rupturing of these capacitors on failure is relatively unusual, and even when the case does rupture, loss of PCB is generally less than ½-gallon as most of the liquid is absorbed by the paper in the capacitor.

The high voltage power factor capacitors are usually installed outdoors in non-hazardous locations. Fire resistance is therefore of minor importance. The dielectric must have a high dielectric constant and a high resistance to corona formation in order to operate successfully at high voltages.

2.6.1.2 Low Voltage Power Factor Capacitors:

Electrical utilities structure their rates so that there is an economic advantage to the industrial user to supply the power factor correction for major inductive loads such as motors, induction furnaces, and welding machines. The capacitors for these applications are designed to operate at 250 to 575 volts.

The PCB/paper combination used as the dielectric in spiral wound capacitors operates most efficiently at a voltage of 400 volts per mil. Technological limits on paper manufacturing limit this dielectric combination to a minimum thickness of about one mil, so the full efficiency of these capacitors is not achieved at voltages below 400 volts. However,

capacitors of this type are used for power factor correction for voltage applications down to 220 volts with the motors in heavy duty whole-house air conditioners.

Low voltage capacitors are usually built into the equipment or located close to the inductive machinery in manufacturing plants. Important requirements of the dielectric and low flammability, low toxicity of the liquid and its degradation products, are chemical stability to achieve long service life of the capacitors. Dry film capacitors could find considerable use in 220 volt applications where space is not a severe limiting factor, as in air conditioners.

2.6.1.3 Lighting Ballast Capacitors

Normal fluorescent light fixtures are designed to operate on 110 volt power circuits. The fluorescent bulbs, however, require about 300 volts to operate. This high voltage is supplied by a transformer which is built into the fixture. A small percentage of fluorescent lights are built with a coil-and-core transformer and no power factor correction. These units are sold for household use on the basis of low initial price. The power factor of these lights is about 0.7.

The fluorescent lights which are manufactured for commercial and industrial applications all have the high voltage supplied by a ballast. This ballast consists of an auto transformer connected in series with a 4μf capacitor. The capacitor is of foil-PCB-paper construction and is sealed into an aluminum can. The transformer and capacitor are packaged in a steel can which is filled with a mixture of asphalt and sand as a potting compound. This finished ballast is about 1" x 2½" x 12", and has a life expectancy of 10 to 15 years in normal service. The lighting fixtures using this arrangement have a power factor of about 0.9. The capacitor in a fluorescent light ballast is usually installed very close to the bulbs, and depending on the design of the fixtures, the ballast operates at temperatures of 85 to 90°C.

High efficiency mercury arc and sodium arc lights are widely used for highway lighting and other high-intensity applications. The ballast units which supply the high voltage for these lights are similar to those used in fluorescent lighting, except they supply more power at a higher voltage.

It should be remembered that the amount of energy that can be stored in a capacitor is proportional to the square of the voltage, so that a 110 volt capacitor would require 8 times the plate area of a capacitor operating at 300 volts.

The major requirements for ballast capacitors are:

small size, implying a high dielectric constant;

ability to operate at 300 volts, which implies a complete exclusion of air so as to avoid corona discharge problems;

chemical stability when exposed to 90°C for long periods of time; and

non-flammability because of the use of the ballasts in houses and other flammable, hazardous locations.

Aerovox reports that they are developing a dry type metallized polypropylene capacitor which could be used in fluorescent ballast applications and that this design would be good for industrial applications up to 370 volts.[11] Application of these units up to 440 volts is considered a possibility. This substitute, when available, would be suitable for 50 percent of the current capacitor applications. It would increase the cost of low voltage power factor capacitors by 20 percent as compared to a PCB unit but would double the cost of ballasts (separate units would be required for purposes of start and storage). The film and metallizing equipment used in these capacitors are manufactured in Europe and currently must be imported. The use of this technology will require major redesign of the parent products, particularly when used in fluorescent light ballasts and room size air conditioners. Because of space and temperature limitations, the dry film capacitors could not generally be used to replace failed capacitors in existing electrical equipment.

It should be noted that the general use of dry film capacitors in European fluorescent lights is not comparable with U.S. practice. The European line voltage is normally 250 volts, which is below the corona discharge voltage into air, but which allows a decrease in size of the capacitor by a factor of 6 compared to 110 volt applications. In addition, the European fixtures are usually single bulb, rather than the dual bulb fixtures used in the U.S., and the auto transformer is much less reactive as it needs only to increase the voltage from 250 to 300 volts. As a result, much less capacitance is required for power factor correction in European fixtures, and the capacitor, can operate efficiently at normal line voltages. Finally, the capacitors in European fluorescent fixtures are installed as discrete components to allow for their replacement; this is necessary because of the higher failure rate of dry film capacitors compared to U.S. capacitors.

In spite of the relative severity of the technical requirements for U.S. ballast capacitors, industry sources indicate that there is probably a 50 percent chance that a usable dry film capacitor will be available in the U.S. by the end of 1976.

2.6.2 Motor Starting Circuits

Electric motors for residential use are designed to operate on single phase current. A number of different methods are used to develop the rotating magnetic field that is required to start the motor, and these methods differ in the amount of torque that is developed at low speeds. Certain applications, particularly compressors in air conditioning units, require a very high starting torque. This is achieved in a single phase motor through the use of a capacitive starting circuit.

In a capacitor run motor, stator windings are connected as shown below:

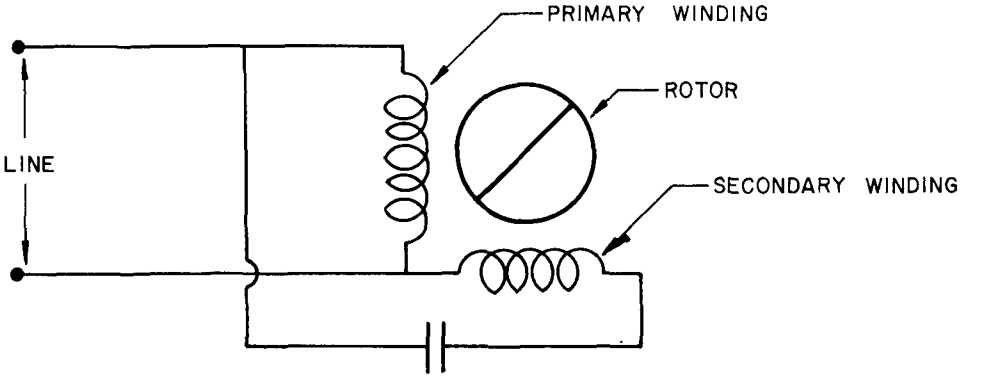

The starting field is connected to the power supply through a capacitor; the result is a starting winding current which leads the applied voltage. Hence, at standstill, the rotor sees fields nearly 90° apart in time as well as 90° apart in space. The resulting, effectively rotating, field results in high starting torque and a high power factor (important during the period when the back emf due to rotor motion is low so that the starting current is significantly higher than the running current). Because of the inductive effect of the starting winding, the capacitor is subjected to a voltage substantially higher than the line voltage. Most 110 volt appliance motors are designed so that the capacitor operates at an effective voltage of 370 volts, thus making optimum use of the characteristics of foil-PCB-paper capacitors.

The capacitor not only performs the necessary function of generating the starting field, but also provides significant power factor correction. In larger motors – primarily 220 volt air conditioner motors – the PCB motor run capacitor is sized for optimum power factor correction and additional capacitance is provided during the first few seconds of start-up by an electrolytic capacitor in parallel with the PCB capacitor. The electrolytic capacitors provide very high capacitance in a small package, but they have a dissipation factor of about 7 percent which causes rapid temperature increases. The electrolytic capacitor is disconnected by a centrifugal switch when the motor reaches running speed. This prevents failure from overheating and results in a configuration with good operating characteristics and satisfactory power factor.

The motor run capacitor is normally built into the motor. This results in a requirement for small size, long life, and fire safety for the capacitor. It is possible that dry film capacitors could be used in this application. However, the high voltages suggest that a liquid dielectric capacitor would be more suitable if a satisfactory substitute were developed for PCBs.

In some applications, DC motors can be used in place of single phase AC motors. Such DC motors are used in some European electrical appliances where the electronic speed control that can be achieved with the DC motor results in a savings compared to the more complex speed control mechanisms required with an AC motor. In these European appliances, the DC power is supplied by a silicon rectifier. However, the output from the rectifier must be filtered to eliminate the AC components, and this filter circuit normally uses a liquid filled capacitor. In addition, the DC speed control circuit requires an additional capacitor. While these circuits could be redesigned to eliminate the use of capacitors, the resulting DC motor would not appear to be economically competitive with the capacitor run motor except in a limited number of special applications.

2.6.3 Electronic Filter Capacitors

Rectifier circuits are used to supply DC current to electronic components. For instance, the circuitry of most U.S. television sets operates at 300 volts DC. The output of the rectifier must be filtered to achieve a stable DC current. Most television sets use a PCB capacitor operating at 300 volts to pass the AC components of the current. This achieves the required 300 volt DC power required by the other components.

Requirements for this capacitor are long life at 300 volts, small size, and good fire resistance. Either a dry film capacitor or a suitable liquid dielectric capacitor could be substituted for the PCB capacitor in this application, although the larger size of the dry film capacitor may limit its use in repairing existing television sets.

2.7 Institutional Barriers to Substitutes for PCBs in Capacitors

The final choice of an acceptable substitute for PCBs will be made by the capacitor manufacturers based on the performance characteristics and fire safety of alternate dielectric materials. This choice will be affected by performance waranties that are common in this industry and by evaluations of safety as reflected in the codes and regulations which govern the use of capacitors. The traditional industry practices and the formal regulations both impose institutional barriers to the acceptance of a substitute for PCBs.

These barriers are a major factor in the rapid replacement of PCBs, and should be carefully considered in the formulation of government regulations and in the industrial marketing of alternate dielectric materials.

2.7.1 Performance Acceptability

Capacitors are sold with stringent performance warantees which cover both the capacitance and the expected life or maximum failure rate of the capacitors. These warantees are based on various capacitor standards which are established by industry groups. The wide usage of a particular type of capacitor will depend on the existence of relevant standards which allows the user to choose equivalent capacitors from different manufacturers.

Currently, no industry standard exists for dry film capacitors for AC applications. However, such a standard is being developed by a committee of the E.I.A. and should be formalized by the end of 1976. This standard will establish minimum performance criteria for any dry film AC capacitors which may be manufactured.

Sales of capacitors to performance specifications implies the acceptance of considerable liability by the capacitor manufacturer. Because of the expense of repairs to lighting fixtures and appliances which have been sold to consumers, the liability due to early failures could easily exceed the cost of the capacitors. A situation of this type occurred during the 1960's when many fluorescent light ballast capacitors failed prematurely. This group of failures occurred when the voltage stress on the PCBs was increased, resulting in a slightly increased rate of degradation by dechlorination caused by corona discharges. The increased failure rate was not apparent on short term tests; the replacement of the failed ballasts was very expensive to the capacitor manufacturer. This problem was solved by the addition of a chemical scavenger to the PCB.

Because of the occurrence of past performance failures and the high potential cost of future failures, the capacitor industry can be expected to be very conservative in the introduction of substitutes for PCBs. Substitutes will be accepted only after the accumulation of substantial long term (3 to 5 years) service testing data. Since the greater biodegradability of the

substitutes implies that they will exhibit lower chemical stability than PCBs, considerable testing at service conditions will be required to support the general use of any of these materials. This requirement of extensive service testing would be expected to delay the general acceptance of PCB substitutes by 3 to 5 years.

2.7.2 Fire Safety

The use of capacitors is governed by several industry standards which embody the general service experience and risk factors as perceived by industry representatives and fire insurance underwriters. These codes and regulations are specific for various applications of capacitors. The major applications must therefore be considered separately.

2.7.2.1 Utility Use of Power Factor Correction Capacitors

Most of these capacitors are installed in substations or are mounted on poles. In general, the locations of these capacitors are non-hazardous, and there is little risk that fire damage or personal injury will result from the failure of a utility capacitor.

The failure of existing utility capacitors may result in uncontrolled loss of PCBs into the environment. The frequency of capacitor rupture is reportedly quite low (estimated to be .02%/year) and the amount of PCB lost to the environment probably does not exceed 2 to 3 pounds per capacitor rupture. However, because of the large number of capacitors in service and the lack of means for containing any leakage, the total environmental load from this source may total several thousand pounds per year.

Current standards for the disposal of failed capacitors containing more than 2 pounds of PCB requires that they be buried in supervised dry land fills that meet state requirements.(1) In addition, the standards require that these capacitors be labeled with a warning as to their environmental hazards. This label must also contain detailed disposal procedures. The major apparent lack in these standards is in the area of control and disposal of leakage from failed capacitors. The necessity for such control may offset the economic penalties associated with the replacement of PCB capacitors by units which are environmentally less objectionable.

2.7.2.2 Industrial Use of Power Factor Correction Capacitor

The use of power factor capacitors in industrial plants is governed by state fire regulations and by the National Electrical Code (4) which has been formally incorporated into OSHA regulations.

The National Electrical Code requires that capacitors that contain more than three gallons of flammable liquid be enclosed in a vault or installed in a outdoors fenced enclosure. The definition of flammable liquid is not explicit, but the effect of the Code is to give large PCB capacitors a significant economic advantage compared to those containing other liquids. Proposals are currently being considered to define a class of transformer and capacitor liquids which are self extinguishing. This may eventually lead to a change in the code so that vaults will not be required for large capacitors in industrial applications. This code change is unlikely to be made prior to issuance of the 1981 code.

2.7.2.3 Lighting and Appliance Capacitors

These small capacitors are usually built into the ballast or appliance. Failure of the capacitor prior to the obsolescence of the light or appliance is infrequent, and the capacitor is scrapped as part of the entire assembly. Currently, most of this material ends in municipal landfills. With growing popularity of reclaiming metal values from municipal waste, there will be an increasing amount of PCB which appears as contaminants of scrap steel and is vaporized or burned off in the steel furnace.

The major drawback to the use of substitute materials is the fire safety of the appliance. Completed ballasts or appliances must meet minimum safety standards as specified by tests conducted by Underwriters Laboratories. Because the amount of liquid contained in these capacitors is small, there is probably little increase in fire hazard if a flammable liquid is used, especially if the capacitor is fused to prevent rupture of the case. However, acceptance of flammable liquids in capacitors will have to await action by Underwriters Laboratories, and recent conversations indicate that they have not yet established either specifications or test procedures for electrical equipment containing flammable liquid capacitors.[5]

3.0 ELECTRICAL TRANSFORMERS

Polychlorinated biphenyls are used as liquid coolants in electrical transformers which are located in enclosed or hazardous locations. PCBs have an advantage over the other major liquid transformer coolant (mineral oil) in that they are nonflammable. Gaseous coolants are also nonflammable, but gas cooled transformers have disadvantages which are considered below. Alternative liquid coolants are probably available, but to date none have been found which have all the advantages of PCBs. The following analysis includes a summary of the purposes of transformers in electrical circuits, heat generation in transformers, currently-used cooling techniques, materials being investigated as substitutes for PCBs, and institutional barriers to the use of substitute materials in place of PCBs.

3.1 Heat Generation in Electrical Circuits

In direct current electrical circuits, the power, P, delivered at a load consisting of pure resistance (e.g., a light bulb) is the product of the electrical current, i, moving through the load and the voltage, V, across the load,

$$P = (V)\ (i) \tag{21}$$

But since current is proportional to voltage for a given resistance,

$$V = (i)\ (R) \tag{22}$$

where R, the resistance, is the constant of proportionality. It follows that power delivered to the load resistance is the product of voltage, V, and the square of the current

$$P = i^2R \tag{23}$$

Since the wires that carry electrical power from the site of generation (be it a battery or an electrical generator) to the load resistance also offer resistance to the flow of electrical current, a portion of the power generated is lost through heating of the wires connecting the load to the electric power source. For a given wire diameter, electrical resistance is proportional to the length of the wire. In many circuits (e.g., an automobile electrical system), the power lost in the transmitting wires is small in

comparison to the power delivered at the load (such as the headlights). However, in transmitting electrical power over long distances, the resistance of the wires could cause the dissipation of a significant portion of the energy intended for the load.

In alternating current circuits, the power dissipated in a resistance (either in the load or in the wires carrying the power to the load) is also given by $P = i^2R$. (The relation, $P = (V)\ (i)$, always applies to power dissipated in DC circuits, but in AC circuits the expression only applies when the voltage and current are in phase with each other, which isn't always the case. In most practical instances involving purely resistive loads it is a fairly accurate means by which to calculate the power dissipated.)

The expression, $P = i^2R$, is not influenced by the phase relation between voltage and current and thus applies to both alternating and direct current circuits. It is apparent from this expression that the energy dissipated in a transmission wire having resistance R is proportional to the second power of the current; thus, if the current being delivered to the load were to be doubled, the energy losses in the transmission wire would be quadrupled.

Commercial electrical power is often generated many miles from where it is to be used. There are hundreds of thousands of miles of power transmission lines in this country, and it is not unusual for the electrical power generated in one place to be used hundreds of miles away, which means that a considerable amount of electrical resistance must be overcome in transmitting electrical energy to the user.

The method used to minimize energy losses in transmission lines is to reduce the current, i, and thus minimize the i^2R losses (also known as Joule heating losses) in the transmission wire. In order to deliver maximum power to the load, the transmission voltage, V, must be increased since the power delivered is (as with DC circuits) effectively given by $P = (V)(i)$. Thus, if the transmitted current, i, is reduced by a factor of 2 - which reduces the Joule heating losses of the transmission line by a factor of 4 - the voltage of the transmitted power must be increased by a factor of 2.

In practice, the electricity which is used in homes at 110 volts is transmitted at voltages ranging up to more than 700,000 volts - roughly 6500 times greater than common wall-socket voltage. As a result, the Joule heating losses are $(6500)^2$, or more than 40 million, times less than if the power were transmitted at 110 volts.

3.2 The Nature and Purpose of Transformers

The purpose of a transformer in an electrical circuit is to transform electrical power from its high-current low-voltage characteristics at the generating facility to the low-current high-voltage characteristics needed for efficient transmission; and then, at or near the site of use, transformers perform the opposite function, bringing the power back into its low-voltage (typically 110v or 220v) high-current form.

A transformer consists of two windings which are joined by a magnetic yoke. An alternating current applied to one winding (the primary winding) creates an alternating magnetic field in the yoke. This magnetic field induces an electric current in the other, or secondary, winding. In a simple transformer, as shown in the following sketch, the ratio of voltages in the primary and secondary windings is equal to the ratio of turns in the windings, or

$$\frac{V_1}{V_2} = \frac{N_1}{N_2}$$

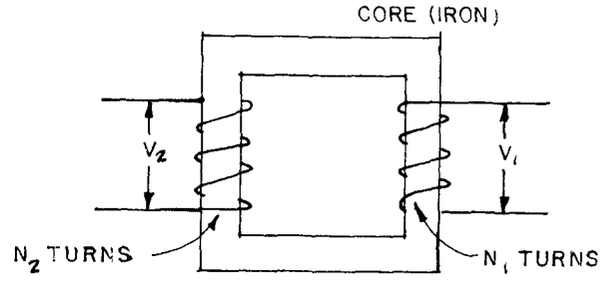

There are two types of transformers used in the electrical power industry: power transformers (used for "stepping up" the voltage at the plant) and distribution transformers (used for "stepping down" the voltage at or near the site of power use). Power and distribution transformers operate on the same principle - they differ only in whether the primary or secondary winding has the greater number of turns. If the transformer is being used for

stepping up voltage, then the primary side is the one having fewer turns; for stepping down, the primary side is the one having most turns.

The lengths of wire in the windings offer resistance to the flow of electricity, the result being the production of heat in the windings. Heat is also produced by electrical currents induced in the transformer core by same mechanism that induces currents in the secondary windings. Since the electrical resistance of most conducting materials increases with temperature, the efficiency of the transformer (i.e., the ratio of the output power to the input power) is maximized if the transformer is kept at a low operating temperature. Therefore, all transformers used in the electrical industry have provision for cooling, based on either gaseous or liquid coolant.

The coolants in common use today are:

- mineral oil, PCBs — liquid cooled transformers
- air, gas — dry type transformers

3.3 Desired Properties for Transformer Heat Transfer Fluids

The purpose of the heat transfer fluid in a transformer is to absorb the heat produced in the windings and core, to transfer the heat to cooling fins, and to provide electrical insulation within the transformer. The ideal fluid should have the following properties:

Heat transfer: Be a liquid with a low viscosity, high heat capacity, and high boiling point. (The use of low boiling point liquids or gases would require that the transformer be enclosed in a pressure vessel.)

Chemical stability: Not degraded by prolonged exposure to high temperatures. Non-flammable in the event of an electric arc within the transformer and subsequent case rupture. Non-corrosive, with non-corrosive products resulting from exposure to an electrical arc. Low solvency toward other materials used to construct the transformer.

Electrical properties: High dielectric strength. Low loss-tangent (minimized dielectric heating of the fluid). High resistance to corona formation.

Toxicity: Non-toxic and biodegradable. By-products from exposure to arc should also be non-toxic.

Cost: Low cost.

Availability: Readily available with reliable properties.

3.4 Use of PCBs in Electrical Transformers

PCB cooled transformers account for about 5 percent of all transformers in service.[3,12] The PCB coolant in these transformers is a mixture of 60 to 70 percent PCBs and 40 to 30 percent trichlorobenzene. The PCBs currently used in these mixtures are sold by Monsanto under the trade names of Aroclor 1242 and Aroclor 1254.

The mixtures of PCBs and trichlorobenzene are commonly known by the generic term Askarel. Askarel is defined by the National Electrical Code as "a generic term for a group of non-flammable synthetic chlorinated hydrocarbons used as electrical insulating media. Askarels of various compositional types are used. Under arcing conditions the gases produced, while consisting predominantly of non-combustible hydrogen chloride, can include varying amounts of combustible gases depending on the askarel type". The most commonly used askarel compositions are Inerteen (Westinghouse trade name for 60 percent PCB mixture) and Pyranol (General Electric trade name for 70 percent mixture). The exact composition of both Pyranol and Inerteen have been changed from time to time, but they have almost always been mixtures of PCBs and trichlorobenzene.

Prior to the mid-1950's, the insulating liquid used in many transformers (General Electric formulation) was a 50-50 mixture of Aroclor 1260 (60 percent chlorine) and trichlorobenzene. In the late fifties the benzene component was changed to a mixture of tri- and tetrachlorobenzenes. In September, 1971, at Monsanto's suggestion, the Aroclor component was changed to Aroclor 1254 (54 percent chlorine). The current Westinghouse formulation (Inerteen) utilizes Aroclor 1242.

The volume of askarel used in various transformers ranges from 40 to 1500 gallons (440 to 16,500 lbs), with an average of about 230 gallons (2500 lbs). One transformer manufacturer, General Electric, estimates the total number of askarel filled transformers put in service in the U.S. since 1932 to be 135,000; virtually all are still in service. Typical lifetime of a transformer is often greater than 30 years, and units that do fail are usually rebuilt and returned to service. The current production rate for askarel filled units is about 5,000 per year, requiring some 10-15 million pounds of PCBs.

Liquid coolants in transformers have better heat transfer and heat capacity characteristics than gaseous coolants. Askarel has the further advantage of being non-flammable. The other advantages of askarels are their high dielectric strength, their outstanding chemical stability, and their relatively low viscosity. Disadvantages , in addition to the environmental threat, are the highly corrosive HCl they produce when arcing takes place and their cost, which is about eight times as much as mineral oil on a volume basis.

Most askarel-filled distribution transformers are located inside public, commercial, or industrial buildings, or on the roof tops of such buildings. No special enclosures or vaults are required except as are necessary to prevent accidental electrical or mechanical contact of persons with the equipment. However, the National Electrical Code does specify vaults for the indoor installation of PCB-filled transformers rated more than 35,000 volts. Askarel-filled transformers are limited by the dielectric strength of the liquid to ratings below 69,000 volts.

Most power transformers are situated in remote locations where fire or explosions are not a threat to property. Mineral oils are commonly used in power transformers in these safe locations. However, some utilities use askarel-filled power transformers at generating stations.

Step up transformers used to supply the high voltage electricity to electrostatic precipitators are usually mounted on or very near the stack. This minimizes the problems associated with the in-plant distribution of high voltage power. These transformers are usually askarel filled units to minimize fire hazard in the usually crowded area of the stack.

Railroad locomotives which operate on high voltage AC power from overhead catenaries are used in the U.S. Northeast Corridor. Askarel-filled transformers are mounted in the engines or under the self-powered passenger cars, and reduce the catenary voltage to that required by the traction motors. These electric locomotives are mostly limited to passenger service on the Northeast AMTRAK routes and on the commuter lines around Philadelphia and New York. Large askarel-filled transformers are used in the old GG-I locomotives, under the Metroliner cars, in various commuter cars, and in the new E-60 locomotives. (Twenty-six E-60 locomotives are currently being delivered to AMTRAK by General Electric; each locomotive contains 710 gallons of askarel). Penn-Central Railroad operating rules require the use of askarels in all locomotives using the tunnels and stations in New York. This rule has been in force as a fire safety measure ever since an early GG-I locomotive containing a mineral oil-filled transformer was involved in a fire inside a tunnel early in the 1940's.

3.5 Present Alternates to the Use of PCBs in Transformers

Askarel-filled transformers are only used where considerations of fire safety, reliability, availability, and cost make such a unit preferable to an oil-filled transformer or to a dry type transformer. These alternative types of transformers are currently used in 95 percent of all applications, and could, with proper engineering design, be used to replace most of the remaining askarel-filled units. Consideration would have to be given to the specific limitations of these designs that presently make askarel-filled transformers preferable for certain applications.

3.5.1 Mineral Oil-Filled Transformers

If safety were not a consideration, there is no reason why oil-filled transformers could not be used in all applications. Askarel-filled transformers cost about 1.3 times as much as oil filled units of the same capacity, and thus most users prefer the oil-type where possible. The oil-filled transformers are the same size as the askarel units, and are considerably lighter in weight. In addition, mineral oil has somewhat better heat transfer characteristics than does askarel, and an electrical arc in mineral oil results in breakdown products that are non-corrosive.

The major disadvantage to mineral oil is its flammability. Transformer mineral oil has a flash point of 145°C, and if an arc occurs within the transformer, the breakdown products will be hydrogen and methane which are also flammable. Detailed records of such failures are maintained by the electrical industry.[13] Fire Underwriters do not approve of the use of oils and other flammable liquids for indoor applications; where oil-filled transformers are not specifically prohibited as on-site replacements for askarel-filled units, the National Electrical Code imposes certain restrictions upon their mode of installation.

Oil-filled transformers are used in almost all power transformer applications and for most substation distribution applications where the high voltage from the transmission lines is reduced to 12.8 kv for local distribution. Most rural pole mounted transformers which reduce the voltage to 220 volts are also oil-filled. The issue of flammability only becomes important where the distribution transformer must be buried, as in many urban applications, or located close to, within or on the roof of the building which it serves. Askarel-filled transformers are used for most of these hazardous areas.

Oil-filled transformers can be used in these applications only if they are suitably isolated from flammable structures or if these structures are suitably safeguarded against fires. When transformers are located outside of the building they service, however, the low-voltage power must be brought into the building via cables or insulated buses, incurring additional energy losses due to Joule heating in the additional low voltage transmission lines.

3.5.2 Open Air Cooled Transformers

Transformers can be built without the use of a liquid cooling medium. One type of dry transformer which is quite successful under limited conditions is the open air cooled transformer. In this design, the required cooling is provided by air which passes through the transformer due either to

thermal convection or forced fan circulation. In those sizes where air cooled transformers are available, they are about equal in price to askarel-filled transformers of the same kva rating. However, the following limitations govern the successful use of open air cooled transformers, and prevent them from being considered for many applications using askarel-filled transformers.

Heat capacity: The power drawn from a transformer usually varies over a fairly wide range. The rating of a transformer is basically governed by the power which it can handle continuously without overheating. If a liquid filled transformer is operated at overload conditions for a short period of time, the liquid will act as a heat sink, absorbing the excess heat produced in the transformer without a rapid increase in temperature. The result of this thermal inertia is that liquid-filled transformers can operate at outputs of up to 200 percent of rated capacity for a period of one to two hours without being damaged.

An air cooled dry type transformer does not have this heat sink available, and is limited to operating at a maximum service rating near its continuous rating. Where the current drawn on the transformer does not vary greatly during the day, this limitation is no problem. However, in most cases the variation in load would require that a dry transformer be sized 20 percent to 30 percent greater in capacity than a liquid-filled transformer for the same application.

Dielectric strength: The liquid coolant in a liquid-filled transformer also provides a significant level of electrical insulation between the various current carrying components within the transformer. Air has a much lower dielectric strength, and open air cooled transformers are limited to a maximum voltage of 25 to 40 kv.

The problem of electrical insulation is even more severe if the open air cooled transformer only operates intermittently. When the transformer is operating, the heat generated within the windings keeps their insulation dry, and maintains a high dielectric strength of this solid insulating material. However, when the transformer is not operating, the coils cool to ambient temperatures and the

insulation can absorb moisture from the air which reduces its dielectric strength. Therefore, an open air cooled transformer must be carefully dried before being put into service after each time it has been allowed to cool.

One final problem with dry air cooled transformers is due to the tendency of dust to be attracted from the air to the coils by electrostatic attraction. This dust can build up in the coils which blocks the flow of air and causes overheating, or the dust can form conductive paths which short circuit the transformer.

Dry open air cooled transformers are generally limited to dry, clean locations where the load requirements are fairly even and constant, and where the maximum voltage does not exceed 30 kv. This type of transformer is being successfully used in large office buildings, particularly tall buildings where the transformers are located every few floors. Even in this application, there are situations which are beyond the capabilities of the open air cooled transformer; for instance, in the Sears Building in Chicago, which is over 1400 feet tall, the electric power is brought into the building and up to the distribution transformers at 128 kv, which is beyond the voltage limitations of open air cooled transformers.

3.5.3 Closed Gas Filled Transformers

Transformers can be built which use a dry inert gas (usually at an elevated pressure) as a heat transfer medium. These transformers avoid the maintenance problems caused by moisture and dust in open air cooled transformers. However, they are similarly limited in overload capacity because of their reduced thermal inertia compared to liquid filled transformers.

Closed gas filled transformers must be installed in pressure tight containers due to the changes in gas pressure caused by changes in temperature. However, the maximum voltage ratings of these gas filled transformers can be equal to that of liquid-filled units.

A number of different gases have been successfully used as heat transfer media in closed gas filled transformers. The most common gas used in the U.S. in this application is the fluorocarbon hexafluoroethane (C_2F_6). Nitrogen and sulfur hexafluoride have also been used successfully in certain applications. Helium has not been found to be a satisfactory gas for this application because its low dielectric strength results in corona discharges within the transformer. Hydrogen gas is unsatisfactory as any leak in the transformer would result in a severe fire hazard.

Because of the necessity for the pressure vessel container, gas cooled transformers are 30 to 40 percent heavier than askarel-filled transformers, and cost two-thirds more than askarel transformers (and twice as much as oil-filled transformers). In addition, the gas filled transformers must often be specified in a larger size than the liquid-filled transformers to allow for the expected heavy load peaks of power consumption.

3.6 Current Alternatives to the Use of PCB Cooled Transformers

The National Electrical Code has detailed specifications for transformers which assure that transformer installations meet both fire and shock safety requirements. These safety requirements are achieved by the use of either non-flammable transformers (askarel or dry type) or vaults, or both. The final choice of the type of transformer to be used in each application will be a function of the code requirements and their economic consequences.

3.6.1 Vault Usage Requirements for Transformers

The National Electrical Code 1975[4] considers three types of transformers in connection with indoor vaults: dry type, askarel insulated, and oil insulated.

Askarel insulated transformers installed indoors and rated at more than 35,000 volts must be enclosed in vaults, according to Section 450-23. This same section specified that askarel transformers installed indoors and rated over 25 kva must have pressure-relief vents which must either be vented to the outside of the building, or some other provision must be made for "absorbing any gases generated by arcing inside the case".

The 35,000-volt criterion also applies to dry type transformers; they must be contained in vaults when in indoor installations. The Code also specifies that dry-type transformers rated at more than 112½ kva must "be installed in a transformer room of fire-resistant construction". Thus, if space is not a consideration, dry-type transformers - which generally occupy a larger volume than equivalent-capacity askarel insulated units - can directly replace askarel-insulated transformers.

In cases where space is not available for the larger-volumed dry-type transformers to replace the askarel-insulated units, or where the dry-type units might emit too much noise for a given location within a building, oil-insulated transformers would be required as replacements for askarel units. Section 450-24 specifies that oil-insulated units must be installed in vaults, but the following exceptions are made:

1. If the total capacity of the transformer does not exceed 112½ kva, vault walls need only be 4 inches thick instead of 6 inches as specified in Section 450-42.

2. Where voltage does not exceed 600, a vault shall not be required if suitable arrangements are made to prevent a transformer oil fire from igniting other materials.

3.6.2 Vault Construction Requirements for Transformers

Section 450-42 of the 1975 National Electrical Code specifies the construction requirements of vault walls, roof, and floor. "The walls and roofs of vaults shall be constructed of materials which have adequate structural strength for the conditions with a minimum fire resistance of 3 hours." (Six-inch thick reinforced concrete is stated in the Code as being typical 3-hour construction.) "The floors of vaults in contact with the earth shall be of concrete not less than 4 inches thick, but when the vault is constructed with a vacant space or other stories below it, the floor shall have adequate structural strength for the load imposed thereon and a minimum fire resistance of 3-hours."

Vault doors are specified in Section 450-43. "Each doorway leading into a vault from the building interior shall be provided with a tight-fitting door having a minimum fire rating of 3-hours" (as defined by the NFPA). "A door sill or curb of sufficient height to confine within the vault the oil from the largest transformer shall be provided, and in no case shall the height be less than 4 inches." Locks are required for vault doors, and "doors shall be kept locked, access being allowed only to qualified persons". The locks shall be arranged so that vault doors can be easily opened from inside the vault.

With regard to ventilation openings, Section 450-45 specifies the following:

Location: "Ventilation openings shall be located as far away as possible from doors, windows, fire escapes, and combustible materials."

Arrangement: "A vault ventilated by natural circulation of air shall be permitted to have roughly half of the total area of openings required for ventilation in one or more openings near the floor and the remainder in one or more openings in the roof or in the sidewalls near the roof; or all of the area required for ventilation shall be permitted in one or more openings in or near the roof."

Size: "For a vault ventilated by natural circulation of air to an outdoor area, the combined net area of all ventilating openings after deducting the area occupied by screens, gratings, or louvers shall not be less than 3 square inches per kva of transformer capacity in service, and in no case shall the net area be less than one square foot for any capacity under 50 kva."

Covering: "Ventilation openings shall be covered with durable gratings, screens, or louvers, according to the treatment required in order to avoid unsafe conditions."

Dampers: "All ventilation openings to the indoors shall be provided with automatic closing dampers of not less than No. 10 MSG steel that operate in response to a vault fire."

Ducts: "Ventilating ducts shall be constructed of fire-resistant material."

Section 450-46 specifies the drainage requirements for vaults: "Where practicable, vaults containing more than 100-kva transformer capacity shall be provided with a drain or other means that will carry off any accumulation of oil or water in the vault unless local conditions make this impracticable. The floor shall be pitched to the drain where provided."

Section 450-47 requires that pipes or duct systems "foreign to the electrical installation shall not enter or pass through a transformer vault". Piping or other facilities provided for fire protection or for water cooled transformers shall not be considered foreign to the electrical installation.

3.6.3 Transformer Vault Construction Costs

In an effort to determine the cost factors in the construction of transformer vaults, various construction comp-nies in the Washington, D. C. area were contacted. It was discovered that the incidence of vault construction in existing buildings is virtually zero; apparently all vaults existing in buildings built in the last twenty-five years were constructed as integral parts of the buildings the same as any other room or enclosure in the building. Thus the cost of constructing a vault cannot be easily broken out from the cost of the entire building structure, especially since the prime contractors in the construction industry often subcontract the various facets of the construction work (e.g., concrete forms, concrete pouring, plumbing, ventilation duct work) and the portion of the work required by the vault is included in the cost of construction of the entire building. The construction companies were reluctant to make cost estimates for installing vaults in existing buildings unless detailed drawings were submitted as a basis for estimation, and of the half dozen largest contractors contacted, none had any readily available data from previous such installations, and all claimed such installations were extremely rare.

The National Electrical Code allows the installation of oil-insulated transformers in outdoor locations adjacent to the site of power use. In the Washington area, as in many urban areas, "manholes" are used to house transformers in outdoor locations.

Useful cost information on manhole installations was obtained through the Potomac Electric Power Company of Washington, D. C. Manholes are precast concrete structures which are commonly installed in public space directly adjacent to the building receiving electric service. (The steel gratings seen in the sidewalks of downtown areas frequently cover manholes containing transformers.)

Manholes are supplied usually by precast concrete product manufacturers. Costs quoted by one manufacturer range from $875 for a 6' x 6' x 6' (inside dimensions) model to $1700 for an 8' x 10' x 7' model. These costs include delivery to the job site and installation into the excavation.

According to Pepco, manholes are usually installed flush against the property line of the building being served. In some cities, the local government pays for the manhole and its installation, but in Pepco's customer service area, the customer pays the cost. (Pepco customers also pay the cost for vault construction when transformers must be installed on private property.) Pepco used to install more than one transformer per manhole, but experience with fires has led them to put only one unit in each hole.

According to Pepco, there are no specific codes relating to manhole construction, but it is likely that local codes influence specific installations. Pepco provides the final 18 or so inches of each manhole installation in order to blend the entire installation into the surface grade; in such cases, and when Pepco has occasion to cast its own manholes, the local building code must be followed.

The average cost of installing a 5½' x 17' manhole is $10,000; no cost-range data were available from Pepco. The labor requirement is typically 600 to 700 man-hours, and total time is about one week. Cost factors include:

1. Working day restrictions - for example, rush hours in some parts of the city restrict work hours to 9:30 to 3:30, but the laborers must be paid for a full days work.

2. Rain time - the laborers do not work in the rain, but they must be paid.

3. Rocky soil - hand digging (i.e., with pneumatic drills and hammers) may be required in lieu of power shovels. In such cases labor costs - which account for 70 to 75 percent of installed cost - can more than double.

The only other cost for manhole installation is the "public space permit fee", a one-time fee to the local government which is about $20 in the Washington, D. C. area regardless of size of the manhole.

Because they are lighter and easier to handle, dry-type transformers are used very often by Pepco, especially in roof-top applications where noise is not a consideration and ventilation is not a problem. This lightness and ease of handling, in conjunction with the lack of vault requirements for dry-type transformers of less than 35,000 volts, might make roof-mounted dry-type transformers the most cost effective replacement for askarel-insulated units in areas where the air is relatively free of corrosive gases and dusts which could affect the transformer.

3.7 Substitutes for PCBs in Transformers

Because of the evidence that PCBs are damaging the environment, considerable work is being conducted to find a satisfactory substitute for PCBs in askarel-filled transformers. These efforts by various manufacturers are attracting considerable interest in the business and technical press.[14,15] The goals of these efforts is the development of a heat transfer liquid which will have satisfactory heat transfer properties, be environmentally acceptable, and be non-flammable. These requirements are basically contradictory; the chemical stablilty required for complete non-flammability implies that the liquid may be non-biodegradable and may accumulate in the environment. Therefore, each of the liquids that have been developed sacrifices a certain degree

of fire resistance to achieve environmental acceptability. The following liquids have been proposed as substitutes for PCBs in transformers installed in hazardous locations.

3.7.1 Fluorocarbons

Certain fluorocarbon compounds have properties similar to the PCBs, and some study is being carried out in this area.[16] However, fluorocarbons are highly volatile in comparison to PCBs, and they are about six times as expensive at this time - though, of course, higher production volumes would lower their cost.

3.7.2 Silicones

Low viscosity silicone fluids (on the order of 50 centistokes) are also possible replacements for PCBs. Silicones are currently produced by four companies: General Electric, Dow Corning, Union Carbide and Stauffer. The silicone fluid recommended by one producer[17] is polydimethyl siloxane, which has this molecular structure:

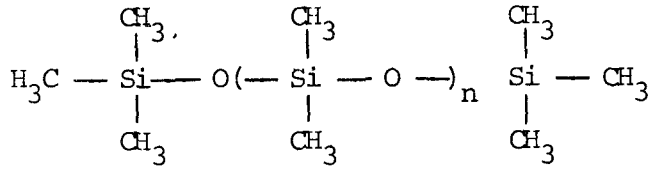

Heat Transfer: Silicone fluids have the special advantage of a relatively temperature-independent viscosity. The silicone fluids have somewhat poorer heat transfer characteristics than askarel, but can be substituted directly for askarel in existing transformers, resulting in only a small decrease in the transformer rating.

Electrical Properties:[18]

Dielectric Constant	2.72
Dielectric Strength	400 volt/mil
Resistivity	7.1×10^{14} ohm-cm
Dissipation Factor	1.8×10^{-5} at 100 hz, $23^{\circ}C$

Flammability: Polydimethyl siloxane has a higher flash point than conventional, non-PCB transformer coolants: 280°C versus 146°C for mineral oil (PCBs have no true flash point). The heat of combustion of 50-centistoke polydimethyl siloxane is lower than that of mineral oil – 7.67 kcal/gm versus 11.0 kcal/gm – and since the silocones burn more slowly, they are considered poor fuel.[18]

On the Underwriters Laboratories fire-hazard classification (in which water is rated as 0 and ether as 100) polydimethyl siloxane is classified as 4 to 5, which is slightly higher than the 2 to 3 rating given to PCBs, but is considerably less than the mineral oil rating of 10 to 20.[19]

Ecological Persistence: These compounds do not biodegrade, as measured by sewage sludge breakdown to CO_2. However, there is evidence that they partly depolymerize to low molecular weight compounds upon contact with soil and water. Since ultra-violet light decomposes methyl silicones, sunlight exposure may be the mechanism for environmental degradation.

Bioaccumulation: No tendency for bioaccumulation or bio-concentration has occurred in experiments. In the mammals the compound is not adsorbed through the gastrointestinal tract or the skin.

Toxicity: The PCB substitute developed by Dow Corning for transformers is called 02-1090. This is a mixture of polydimethyl siloxanes of various chain lengths which have a viscosity of 50 CS. The literature on environmental and health characteristics of silicones[20] refers to at least six fluids, most of which are probably similar to the OZ-1090 but some of which could be other mixtures with certain additives. By necessity, the usefulness of published toxicological data depends on the validity of the assumption that all of these compounds have identical persistance, bio-accumulation, and toxicity properties.

A review of toxicological studies of silicones reported the following results:[20]

Dietary Toxicity:

LD_{50} (rats) >28 gm/kg

Extended Feeding Tests:

Guinea pigs - 47 gm/kg/day for extended period - no toxic effect.

Mallard ducklings and bobwhite quail - 5000 ppm for 5 days - no effect.

Rats - 20 gm/kg/day for 28 days - no effect.

Rats - 190 mg/kg/day for 90 days = no effect level.

Beagle dogs - 300 mg/kg/day for 120 days - no effect.

Mice - 3% in diet for 80 weeks - no effect.

Man - FDA allows silicones as food additives at up to 10 ppm.

The major deficiency in our knowledge of the silicones appears to be in their fate in the environment and the toxicity of their breakdown products.

Cost: The silicone transformer fluids currently cost up to twice as much as PCBs on a volume basis.

Availability: Dow Corning is currently completing evaluation of polydimethyl siloxane as a high voltage insulating fluid. They report, though, that a near term 100 percent replacement of PCBs in transformers by this fluid is not possible. If a transformer market were to develop for

polydimethyl siloxane, the present domestic capacity could only be adequate to supply new transformers. The time lag for a 100 percent replacement of PCBs in transformers by polydimethyl siloxane would be on the order of 5 to 10 years.

3.7.3 High Flash Point Mineral Oils

The flash point of mineral oil is a function of its molecular weight. Crude petroleum can be refined to have any required molecular weight over a wide range. This makes it possible to specify any particular flash point that is desired for the mineral oil transformer liquid. This approach has been taken by RTE Corporation in the development of their proprietary transformer liquid which has the trade name RTEMP.[21]

RTEMP is a highly refined paraffinic mineral oil which has a flash point of 296°C, approximately the same as the 50CS silicone liquid proposed by Dow Corning. To achieve this higher flash point, the oil is refined to have a higher molecular weight and consequently a higher viscosity which reduces its effectiveness in convective cooling. It may be possible to achieve a lower viscosity without sacrificing the fire resistance of the liquid, but this modification has not yet been demonstrated.

The major current advantage of the high flash point mineral oils is their low price relative to silicone and askarel, and their inherent biodegradability and low toxicity.

3.7.4 High Flash Point Synthetic Hydrocarbons

Certain mixtures of synthetic hydrocarbons may result in a liquid having the high flash point characteristics of RTEMP or silicone combined with a relatively low viscosity and satisfactory heat transfer characteristics. The Monsanto Co. is reportedly testing such a mixture

which has the trade name MCS-1866. No technical details are available on the liquid except that it is claimed to have flammability and heat transfer properties equivalent to silicone at a much lower cost, and to be environmentally acceptable. Monsanto has stated that the technical details will be made public early in 1976.

3.8 Institutional Barriers to the Use of Substitutes for PCBs

The National Electrical Code recognizes only three classes of transformers: askarel, mineral oil, and dry. The Code requirements for askarel and mineral oil transformers differ only in the vault requirements: for transformers located inside buildings or in hazardous locations, vaults are required for all mineral oil transformers, but only for those askarel transformers rated at over 35,000 volts. Askarel transformers are economically attractive for many applications because the savings in vault costs more than offset their higher price relative to mineral oil transformers, and their reliability is better than that of open air cooled transformers. In all cases, technically acceptable alternatives are available to replace askarel transformers; the only limitations are economic.

All of the substitute liquids that have been developed are more flammable than askarels, but less flammable than mineral oil. These liquids do not come within the definition of askarel in the National Electrical Code, and their use is governed by the rules that apply to oil filled transformers. Thus, there is no economic or technological incentive to use these alternate liquids under present Code regulations.

If the Code is to be changed to offer an economic incentive to the use of these liquids, the relative safety of each liquid must be assessed, and a decision must be made as to "how safe is safe enough". In particular, test

procedures must be developed which allow a realistic estimate to be made of the relative safety of each liquid under conditions which may be expected in service.

Limited testing of the relative fire safety of the various transformer liquids has been conducted by RTE Corporation. The properties of the four liquids that were tested are summarized in Table 3.8-1 which is reporduced from the test results report prepared by Mr. D.A. Duckett of RTE Corporation. (21)

The RTE test consisted of the following procedure for each liquid:

> Four gallons of liquid was heated to 150°C in a closed container. An electrical arc was then initiated below the surface of the liquid. Arc conditions were 4800 amperes at 4800 volts. The resulting explosion and fire was recorded photographically.

The results of this test were as follows: In all four cases, the lid was blown off the container and a fire ball was formed above the container. In the test of the transformer oil, the liquid remaining in the container continued to burn after the fire ball dissipated (as would be expected, as the liquid was heated to its flash point prior to the initiation of the arc). The other three liquids self extinguished within several seconds. Because the fire performance of the RTEMP and the silicone liquids were similar to that of askarel under these test conditions, both RTE Corporation and Dow Corning submitted proposals to the transformer committee of the National Electrical Code to allow the use of "self extinguishing" liquids where present Code regulations require the use of askarel. If these proposals were to be accepted, the use of these liquids would be allowed by the 1978 Code.

There are a number of questions which have not yet been satisfactorily answered concerning the use of the "self extinguishing" liquids. The most important question concerns the realism of the test conditions. It has been suggested that catastrophic arcing is a relatively unusual cause of transformer failure, and that a more frequent cause is prolonged minor arcing which creates

TABLE 3.8-1

PROPERTIES OF TRANSFORMER LIQUIDS
TESTED BY RTE CORPORATION*

FLUID PROPERTIES:	TRANSFORMER OIL	RTEMP	SILICONE DC-200	ASKAREL
DIELECTRIC				
Dielectric Strength (ASTM D-877) kV (25°C-fluids as received from vendor)	31	37	34	40
Dielectric Constant	2-2.5	2.2	2.74	4.5
Power Factor 50°C	<.01	0.6	0.6	--
100°C	1.0	2.2	0.9	--
150°C	2.5	10.5	1.5	--
Dissipation Factor (ASTM D-150)	.0004	<.05	.0002	.03
Volume Resistivity (ASTM D-1169) Ohm-cm	1.0×10^{12}	1.1×10^{13}	5.6×10^{14}	5.0×10^{12}
THERMAL				
Flash Point °C	150	296	304	--
Fire Point °C	162	321	360	--
Pour Point °C	<-57	-21	-55	-37
Thermal Conductivity 25°C cal/(sec-cm^2-°C)/cm	.000318	.000297	.000360	.000262
Specific Heat (cal/gm/°C) 25°C	.393	.450	.340	.264
Coefficient of Expansion(cc/cc-°C)	.00063	.0008	.00104	.00067
PHYSICAL				
Specific Gravity (ASTM D-1810) 25°C	.883	.883	.961	1.545
Interfacial Tension (dyne/cm)	49.4	25.5	20.8	50.0
Neutralization Number (mgKOH/gram)	<.02	.011	<.01	<.01
Viscosity (centistokes)				
25°C	16	800	50	18
50°C	8	150	30	10
100°C	3	24	16	4
150°C	--	8	12	<3

* Reproduced from report:

"Environmentally Acceptable Insulating Fluids May Replace Askarels", by D.A. Duckett, RTE Corporation; May 8, 1975.

a flammability problem due to the breakdown products of the transformer oil. If this were the case, neither silicone oil nor high flash point mineral oil would be significantly better than the present transformer oils.

Because of the limited test data that is available, it appears unlikely that the proposals will be approved for inclusion into the 1978 Code. Since the deadline for submission of proposals for this Code revision has passed, the most likely date for any Code revisions is the 1981 Code.

The general acceptance of alternate liquids in place of askarels will only occur after the performance of these liquids has been demonstrated by prolonged service tests under realistic conditions. The effect of the Code is to prevent the testing of alternate liquids in transformers which, under the rules, must be filled with askarels. The inclusion of the Code into the regulations of the Occupation Safety and Health Administration is an additional institutional barrier to the accumulation of adequate performance experience.

3.9 Relative Merits of Alternatives to New Askarel Transformers

The relative merits of the various alternatives that have been proposed are summarized in Table 3.9-1. Special consideration must be given to the suitability of each of the alternatives to the major types of transformers which currently use askarels.

3.9.1 Distribution Transformers

Very few distribution transformers presently use askarels. These transformers are generally installed at the site of major generating plants, and there would be little difficulty in designing these plants so that mineral oil cooled transformers could be used safely.

3.9.2 Power Transformers

Askarel cooled transformers are used in buildings and industrial plants without vaults where the maximum voltage is less than 35,000 volts. Currently available alternates in new construction are:

TABLE 3.9-1

Relative Merits of Alternatives to the
Use of Askarel Transformers in New Applications

	Toxicity	Fire Risk	Cost/ transformer relative to askarel transformer	Reliability vs PCB	Convertability of present transformers
Mineral oil transformer in vault	excel.	excel.	$5000 to $50,000 more	good	usually no
Mineral oil transformer installed in non-hazardous location	excel.	excel.	$5000 to $50,000 more	good	usually no
Dry transformer	excel.	excel.	1.5x	poor	usually no
Silicone heat* transfer oil	excel.	fair/good	1.3x	good	probably* yes
High flash point* hydrocarbon oil	excel.	fair/good	1x	good	probably* yes

* Use depends on Code regulations being changed to allow self extinguishing liquids as direct equivalents of askarels.

- Mineral oil transformer installed in a vault
- Open air cooled transformers - limited to clean dry environments with even power requirements. Satisfactory for most office buildings and shopping centers.
- Mineral oil transformers at a site away from the building. This will be satisfactory for most trailer parks and industrial plants except for those locations where space is extremely scarce.

A possible, future, alternative may be to use a "self extinguishing" transformer fluid in those applications where askarels are now required. This alternative requires that major changes be made to the National Electrical Code.

3.9.3 Precipitator Transformers

These are high voltage step-up transformers which are mounted on or near industrial stacks. It should be possible to use mineral oil cooled transformers in all such applications.

3.9.4 Railroad Transformers

These transformers use askarel due to Penn-Central Railroad regulations. However, foreign experience indicates that there is no significant fire risk from the use of more flammable liquids in these transformers: European practice has traditionally been to use mineral oil in locomotive transformers. About ten years ago an experimental transformer was built in France which used an enclosed gas cooled (sulfur hexafluoride coolant) transformer.[22] Although somewhat limited in peak power output (overload conditions) compared to oil-filled transformers, it performed satisfactorily during extensive tests. However, this type of transformer did not gain wide acceptance because it was more expensive than oil-filled transformers, and there was not felt to be any significant safety problem associated with the use of the oil-filled units.

General Motors Corporation recently supplied a demonstration electric freight locomotive to the Penn-Central Railroad for test. This

locomotive is designated a type GM-6. The transformers in this locomotive were supplied by a Swedish manufacturer, and are filled with mineral oil as Swedish regulations would not allow the use of PCBs even for test purposes. As a result of this material choice, this demonstrator locomotive is not allowed into the tunnels into New York.

Japanese practice over the past four years has been to use silicone oils in new railroad transformers. No service problems have been reported.

AMTRAK is presently negotiating the lease of several new electric locomotives from France. Preliminary specifications call for the transformers to be able to operate satisfactorily with mineral oil, askarel, or silicone oil as the coolant.

3.10 Replacement of Askarels in Existing Transformers

There are currently about 135,000 askarel-filled transformers in service in the United States. These transformers contain an average of 2000 to 2500 pounds of PCBs each, for a total in-service inventory of about 300 million pounds of PCBs. Accidental losses of askarel may occur due to failure of these transformers and accidental spills during servicing. It has been suggested that these losses may be a significant source of PCBs into the environment, and that this source of pollution could be minimized by refilling these transformers with an approved "self extinguishing" transformer liquid.

3.10.1 PCB Losses Due To Transformer Failures

The incidence of failure of askarel-filled transformers has been estimated to be 0.2 percent per year. No more than 1 percent of these failures result in a rupture of the transformer case and spillage of liquid. The usual failure involves only a venting of gases from the transformer safety valve, followed by immediate operation of the circuit breakers to remove the power from the transformer. Thus the expected incidence of spillage is probably on the order of 3 transformers per year containing perhaps 6000 lb of PCB. However, most askarel transformers are installed in buildings or in vaults where there is a provision for containing any leakage. It is probably

reasonable to assume that the cleanup activities following a transformer rupture are 90 to 99 percent effective in recovering the spilled askarel, which limits the total uncontrolled loss of askarels from transformer ruptures total of 60 to 600 lb per year. If it is assumed that the venting of vapors during a transformer failure results in the loss of an average of two lb of PCB due to evaporation, the total losses from this source will be about 540 lb per year. Thus, the total annual entry of PCB into the environment due to transformer losses is on the order of 4 lb per million lb of PCB in service.

3.10.2 Environmental Effects of An Askarel Replacement Program

The proposal to drain the existing askarel transformers and refill them with an environmentally acceptable heat transfer liquid presupposes the availability of sufficient quantities of a liquid having satisfactory fire resistant properties and heat transfer properties equal to askarel. No such material is currently available. The use of either silicone oil or a high flash point hydrocarbon material would require a change in the National Electrical Code regulations which govern the installation of transformers. In addition, all of these materials have poorer heat transfer characteristics than askarels, which may require the derating of all the transformers.

Assuming that a satisfactory substitute liquid were available, the retrofitting of the existing transformers still faces a number of practical problems. The most difficult problem is the achievement of thorough draining of askarels from the existing transformers. Much of the liquid is held in the insulation of the transformers by capillary action; simple draining of a transformer only removes 80 percent to 90 percent of the liquid. Therefore, it will be necessary to flush each transformer 2 or 3 times with a liquid which will dissolve the remaining askarel, and which is compatible with the liquid used to refill the transformer. This requirement of compatibility could be a major problem; for instance, askarels are immiscible in silicone foils.

It can reasonably be expected that the draining and flushing of each askarel-filled transformer will result in an average of 800 gallons of askarel and PCB contaminated liquid. This liquid must be shipped to an incinerator and burned under controlled conditions. Disposal of the liquid

could be expected to cost $700 plus the cost of the shipping containers and transportation.

The result of this draining, flushing, and refilling procedure will be a transformer which is filled with 300 gallons of an environmentally acceptable liquid that is contaminated with 10 to 20 lb of PCB. This reduction in the amount of PCBs in service will reduce the severity of potential transformer failures, but will not eliminate the need for careful handling or eventual disposal of the contaminated liquid.

A more serious concern would be the amount of accidental spillage which would occur when the scrap askarel and flushing liquid is shipped to the incinerator for disposal. The current lack of sufficient incineration facilities would require that much of this liquid be stored in drums or tanks for an extended period of time. In addition, the accidental leakage from broken drums and other accidents which can be expected to occur during transportation can be expected to release PCBs and flushing solvent to the environment.

3.10.3 Effect of Leaving Askarel Transformers in Service

The alternative of leaving the askarel in the transformers until they become obsolete or fail is probably to be preferred to retrofitting these transformers with a less toxic liquid. The existing askarel should last the life of the transformers; only infrequently is it necessary to filter the liquid to remove the degradation products of minor internal arcing, and askarel losses during this filter cycle should not exceed 1 percent of the total liquid in the transformer. Askarel for makeup of these losses will not be available once it is no longer used in new transformers; Monsanto has announced its intention of closing the only U.S. PCB manufacturing plant as soon as satisfactory substitutes are available for PCBs in electrical equipment. This should not prove to be a major problem in the maintenance of askarel transformers, as minor losses of liquid can be replaced with pure trichlorobenzene. The resulting mixture will be suitable as long as the concentration of the PCBs is above 50 percent; below this concentration of PCBs, solvent attack on

the solid insulation may occur. Complete replacement of the transformer required by lack of askarel should be infrequent and should not impose a significant economic burden on the electrical industry.

The decision to leave existing askarel transformers in service also gains time for the solution of the problem of scrapping failed or obsolete transformers. Current specifications require that transformers be drained and flushed before being scrapped. This, however, cannot be expected to remove more than 95 to 98 percent of the PCBs from the transformer internals.

It is currently very unusual for transformers to be scrapped, but when they are scrapped the value of the metal is sufficient to make recycling attractive. There is currently no acceptable facility for the recovery of metal from failed transformers. Special procedures would have to be used to prevent PCB residues from being carried through into the scrap furnaces. This will eventually be a significant problem. Better solutions to the problem can be expected if the problem is delayed by leaving existing transformers in service.

4.0 INVESTMENT CASTING

The investment casting process is a lost-wax casting process in which a pattern is molded from wax and then invested or surrounded by a slurry containing a refractory ceramic. After the ceramic mold is dried to an appropriate strength, the wax pattern is melted or burned out leaving a molded cavity. Molten metal is then poured into the cavity, and solidified by cooling to form a cluster of metal castings. Maintenance of close dimensional tolerances requires that the shrinkage of the wax be carefully controlled during the initial pattern step. This control requires either slow cooling of the pattern while the wax is solidifying or the use of a wax material which shrinks very little upon solidification.

4.1 Function of the Filler Material

One method of modifying the wax to achieve minimal shrinkage is to fill the wax with a finely powdered material that is insoluble in the wax and remains solid at the temperature at which the wax is cast into the molds.

Because this filler does not change state (from a liquid to a solid) on cooling, it exhibits very low shrinkage, and the resulting slurry of wax and filler will be much more dimensionally stable than will be the pure wax.

The second step in the casting process is to burn the wax residues out of the ceramic mold so that the mold will be completely empty when metal is cast into it. This requires that the filler be volatile at the temperatures used to fire the molds, and that the vapors be non-toxic.

4.2 Use of PCBs in Investment Casting

Some of the pattern waxes, especially those used in the casting of metal parts requiring tight dimensional tolerances, contain decachlorobiphenyl (deka) as the wax filler. Decachlorobiphenyl waxes contain approximately 30 percent (perhaps up to 40 percent) of the decachlorobiphenyl filler.[23] Pattern waxes are recovered and reused several times to form the sprues and gates of the patterns. Wax is apparently used an average of 2.5 times. During the dewaxing process the virgin wax (used to form the pattern) and the old wax (used to form the gates and sprues) are collected as one mixture. Little of the wax is destroyed in the process; therefore, it is probable that the investment casting foundries store or dispose of relatively large amounts of used PCB-containing wax.

It is estimated that approximately one to 1.5 million pounds of decachlorobiphenyl-filled wax is purchased yearly by U.S. investment casters. The cost of the PCB-filled wax is in the range of $0.70 per pound.[24] Imported polychlorinated terphenyls, which exhibit properties very similar to decachlorobiphenyl, is also used as a pattern wax filler. There is only one U.S. producer of deka-filled wax, and this company also produces PCT-filled pattern wax.

4.3 Advantages and Disadvantages of the Use of Deka PCBs in Investment Casting

The deka PCBs have nearly ideal properties for fillers in investment casting waxes. These materials are only slightly soluble in the wax, remain solid at the wax casting temperatures, and volitilize completely at the firing temperatures without charring or burning.

The only disadvantage to the use of deka PCB is its suspected possible environmental persistence and, by analogy to the other PCBs, its toxicity. No direct evidence of environmental damage from this compound has been found to date.

4.4 Alternatives to the Use of Deka PCBs

Potentially acceptable process alternatives for the deka PCBs could utilize either a replacement filler material or an unfilled wax.

4.4.1 Replacement Filler Materials

Properties required for a filler are: high melting point (over 300°C), high heat transfer coefficient, low thermal coefficient of linear expansion, and minimum ("zero") ash. The following materials have been suggested as possible replacements for deka PCB.

4.4.1.1 Isophthalic Acid

Isophthalic acid has been used as a filler material to a limited extent, but the grade of material that was previously available left an ash residue on firing.[25] A new grade of isophthalic acid, only recently commercialized by AMOCO Chemicals Corp., exhibits much lower ash and metal contents. The various grades of material available from AMOCO are as follows:[26]

Grade	Cost in Bulk	Comments
IPA 85	$0.24/lb	High ash
IPA 99	$0.27/lb	Previous use history
IPA 110	$0.31/lb	Being phased out
IPA 220	$0.35/lb	New - low ash

Although there is a considerable body of literature on phthalic acids and phthalate esters, their environmental fates are not known. Degradation routes properties of degradation products, etc., which are of great importance to an assessment of environmental acceptability have not been studied in depth. It can be surmised that this will be the case for most filler substitutes.

4.4.1.2 Polystyrene

Polystyrene plastic is available from a number of suppliers including Dow Chemical Co., Monsanto, and Foster-Grant. If this plastic were reduced to a sufficiently fine powder, it would have physical properties equivalent to deka PCB and should perform satisfactorily as a wax filler. The bulk cost of polystyrene pellets is $.40/lb, and the size reduction should cost an additional $.08/lb of filler.

Upon firing, the polystyrene could be expected to depolymerize to styrene which would be volitilized. Styrene vapor has known toxic properties. This potential problem may limit the serious consideration of polystyrene as a wax filler.

4.4.2 Unfilled Waxes

Prior to the use of PCBs or PCTs as fillers, unfilled waxes were used. Industry sources claim that reverting to the use of unfilled waxes would increase production costs by about 10 percent. However, new types of unfilled waxes have recently been introduced to the market, and it is claimed that their properties are equivalent to the filled wax and their cost is slightly lower ($0.60 to $0.65/lb).[27] Although the exact formulation of these waxes is not known, they reportedly contain no chlorinated additives.

4.5 Conclusions - Substitutes for PCB in Investment Casting

Technically adequate substitutes for decachlorobiphenyl filler in pattern waxes appear to be available. Maximum increases in costs would be about 10 percent. The only producer of wax containing PCBs could probably change to other types with very little technical difficulty or economic impact.

SUMMARY

SUBSTITUTES FOR PCBs

Capacitors

PCBs are used as the dielectric liquid in almost all AC capacitors used by the electrical utilities for power factor correction and in various industrial applications including appliance motors, fluorescent light ballasts, and power supply circuits in television receivers. PCBs are uniquely suited for capacitor applications because of their high dielectric constant, chemical stability, and non-flammability.

A number of different chemicals are being developed as replacements for PCB capacitor fluid. There is not yet sufficient data available on the electrical performance, chronic toxicity, or environmental effects of any of these liquids.

Dry film AC capacitors are also being developed. These capacitors are significantly larger than liquid-filled capacitors and are limited to a maximum of 280 volts. Satisfactory dry film capacitors will not be available until there are two separate technological breakthroughs: 1) the development of a plastic film that combines a high dielectric constant with a low loss-tangent; 2) the development of winding techniques that exclude all air from the winding of the capacitor.

Although it is probable that satisfactory substitutes for PCBs will be developed within the next 5 years, no such material is presently available and much additional research remains to be done.

Transformers:

PCBs are used as a major component of the non-flammable transformer liquid known as askarel. Only about 5 percent of all transformers are cooled with askarel. These are the transformers which are located in buildings and other hazardous locations where fire resistance is of great importance.

Most transformers are cooled with mineral oil. This liquid is flammable and the National Electrical Code requires that oil-filled transformers be

installed in fire proof vaults when they are used in buildings. Vaults are not required for askarel-filled transformers that are rated at less than 35,000 volts. Although the askarel-filled transformers are 20 percent to 30 percent more expensive than oil cooled units, the savings on vault construction costs more than offsets the difference.

Other currently available substitutes for askarel-filled transformers are open air cooled transformers, which are limited to lower voltage applications in clean, dry environments, and closed gas cooled transformers which are more expensive than askarel units. Both of these dry transformers have lower overload capacity than do askarel and oil-filled units.

Technically satisfactory alternatives are available to the use of transformers containing PCBs. The present choice of PCB units is based on the relative costs of the alternatives.

Several substitute liquids have been suggested which are less flammable than the currently used mineral oil, but which are more flammable than askarel. These liquids are characterized as being self extinguishing – i.e., they do not continue to burn after being ignited by a momentary electrical arc. Proposals have been submitted to the National Electrical Code to allow the use of these self extinguishing materials under those conditions where askarels are presently specified. Because of the relative lack of service experience with these liquids, it is unlikely that these proposals will be accepted. The next Code revision (1978) will probably continue to recognize only askarel and "oil filled" transformers.

It is likely that the "self extinguishing" liquids will prove to be satisfactory alternatives to PCBs. Substantial experience on the performance of the liquids will be required before the Code requirements will be changed to allow their use. The restrictive Electrical Code, which has been incorporated into the OSHA Regulations, may act to inhibit the accumulation of this data and thereby act to postpone the general acceptance of these substitutes for PCBs.

It has also been suggested that PCBs be drained from existing transformers and replaced with a less toxic material. Analysis of this alternative suggests that it may have a worse effect on the environment than would the continued use of PCB in the transformers.

SUMMARY

INVESTMENT CASTING

Dekachlorobiphenyl is used by one manufacturer in the formulation of investment casting waxes. The deka PCB acts as an inert filler which reduces the shrinkage which occurs when the wax solidifies. Other manufacturers use polychlorinated terphenyls (PCTs) for the same purpose. All of the deka PCB and PCTs used in investment casting waxes are imported.

Several substitutes are available for deka PCB waxes. These include the replacement of the PCB with isophthalic acid, or the use of new low shrinkage non-filled waxes. Complete elimination of deka PCBs from this application should be possible without causing significant problems.

REFERENCES

1. Guidelines for Handling and Disposal of Capacitor-and Transformer-Grade Askarels Containing Polychlorinated Biphenyls, ANSI C107.1 - 1974, American National Standards Institute, Inc., N.Y., N.Y., January 9, 1974.

2. Wood, David, Chlorinated Biphenyl Dielectrics - Their Utility and Potential Substitutes, (Presented at the National Conference on Polychlorinated Biphenyls, Chicago, Il., November 19-21, 1975), Monsanto, 1975.

3. Nelson, J.D., (General Electric Company), "Effluent Limitations for Items on Toxic Substances List; Economic Impact of a Bar in PCB," Contained in Communication to Dr. Martha Sager, Chairman, Effluent Quality Information Advisory Committee, November 21, 1973.

4. National Electrical Code - 1975, National Fire Protection Association, Boston, MA, (NFPA No. 70-1975; NASI C1-1975), 1974.

5. Personal communications with knowledgable individuals in the electrical equipment industry.

6. Inchalik, E.J., (Exxon Chemical Co.), Verbal Presentation, National Conference on Polychlorinated Biphenyls, Chicago, Il., November, 1975.

7. Rey-Coquais, Bruno, (Prodelec, S.A.), Verbal Presentation, National Conference on Polychlorinated Biphenyls, Chicago, Il., November, 1975.

8. Branson, D.R., Health and Environmental Properties of Dow XFS-4169L Capacitor Fluid, (Oral Presentation to the U.S. E.P.A., Washington, D. C., October 16, 1975), Dow Chemical Co., October, 1975.

9. Branson, D.R., (Dow Chemical Co.), Verbal Presentation, National Conference on Polychlorinated Biphenyls, Chicago, Il., November, 1975.

10. Montgomery, Richard, (Dow Corning Corp.), Verbal Presentation, National Conference on Polychlorinated Biphenyls, Chicago, Il., November, 1975.

11. Tuttle, Cliffton, (Aerovox Co.), Personal Communication, September, 1975.

12. McAllister, John F., (General Electric Co.), "Benefits of PCB Use". Letter to Dr. Edward J. Burger, Jr., Executive Office of the President, Office of Science and Technology, December 30, 1971, 36 pp.

13. Report on Power Transformer Troubles, 1969, Edison Electric Institute, Publication No. 71-20, 1971.

14. "The Rush to Market for PCB Substitutes", Business Week, January 19, 1976, pp 30E-31E.

15. Bloomquist, W.C., "What is the Future for Askarel", Power, Vol. 120, No. 2, February, 1976, pp 68-70.

16. Interdepartmental Task Force on PCBs, Polychlorinated Biphenyls and the Environment, Washington, D. C., May, 1972.

17. Burrow, R.F. & Orbeck, T. (Dow Corning Corporation, Midland, Michigan) Silicone Fluid Filled Transformer - An Alternative to Askarel and Dry-Type Transformer?, (Presented at the Doble Engineering Client Conference, Boston, MA., Aprin 9-13, 1973), Dow Corning Corp., 1973.

18. Burrow, R.F., & Vincent, G.A., Silicone Fluids vs Hydrocarbon Oils:, a Comparison of Thermal and Electrical Performance Capabilities, (Presented at the 1974 Winter Meeting, IEEE Power Engineering Society, N.Y., N.Y., January 31, 1974), IEEE Paper No. C 74-258-0.

19. Report on Dielectric Medium Under the Classification Program - File MH9466, Underwriters Laboratories, Inc., May 26, 1972.

20. Rowe, V.K.; Spencer, H.C.; Bass, S.L; "Toxicological Studies on Certain Commercial Silicones", The Journal of Industrial Hygiene and Toxicology, Vol. 30, No. 6, pp 332-352.

21. Duckett, D.A., Environmentally Acceptable Insulating Fluids May Replace Askarel (Presented at the General Meeting, Edison Electric Institute Transmission and Distribution Committee, Minneapolis, Minn., May 8, 1975), RTE Corporation, May, 1975.

22. "Transformateur dans le gaz", Chemins de Fer, No.246, 1964-3, p 96.

23. Solomon, P. (Yates Manufacturing Co., Chicago, Illinois), Personal Communication, September 9, 1975.

24. Lewis, W.H. (President, Signicast Corp., 9000 North 55 St., Milwaukee, Wisc.), Statements during Lecture of Investment Casting Institute Meeting, October 4, 1975.

25. Edwards, Dan (Chicago Laboratory - Standard Oil Co., Amoco Chemical Corporation, Joliet, Ill.), Personal Communication, October, 1975.

26. Connelley, J. (New York Office, Standard Oil Co., Amoco Chemical Corporation, Joliet, Ill.), Personal Communication, October 1975.

27. Davidson, R. (Freeman Manufacturing Company, Inc., 1315 Maine Ave., Cleveland, Ohio), Personal Communication, November 1975.

SECTION IX

PCBs RELEASE AND CUMULATIVE ENVIRONMENTAL LOADS

1.0 ESTIMATES OF FREE PCBs IN THE ENVIRONMENT

1.1 PCBs Losses to the Environment Since 1930, by Use and by Chlorine Content of Molecule

This section includes an analysis of the estimated amounts of PCBs which have escaped to the environment, by molecular chlorine content. The approach and results are summarized below.

Loss factors, which include spillage losses during manufacture or use of the end products and losses due to inadequate disposal methods, are estimated on the following basis:

Use Category	% of Yearly PCB Use Lost to Environment
Closed electrical systems (transformers and capacitors)	5%
Hydraulic and heat exchange fluids	60%
Plasticizers	25%
Miscellaneous industrial applications	90%

Each of the assigned loss percentage factors can be the subject of considerable controversy. Suffice it to say that the choices made appear to be reasonable based on the widely varying information considered.

The following data have been computed on the basis of the production and sales data released by Monsanto on the PCBs. Since by far the largest production has been in the form of Aroclors 1242, 1248, 1254, and 1260, these data are based only on those four mixtures.

"Proportional Use Factors for PCBs" were computed from the Monsanto PCB manufacturing and sales data utilizing the domestic sales by category information. Since the detailed breakdown for the period 1930-1957 was not available, it was assumed that the pattern for this period followed the average

for the period 1957-1959. Estimates were then prepared of the actual production and use of the individual Aroclors listed above. Table 1.1-1 is a tabulation of the estimated amounts of Aroclors that have escaped into the environment, assuming that 5% of the PCBs used in capacitors and transformers escaped; 60% of that used for hydraulic media, and heat exchange media escaped; 25% of that used for plasticizers escaped; and, finally that 90% of that used in miscellaneous industrial uses has escaped.

These data may be expressed in terms of chlorine content, based on published Monsanto data on the isomers typically present, by chlorine content, in each Aroclor type. The results from such an exercise are presented in Table 1.1-2. The totals in the right-hand column represent the cumulative totals of all escaped PCBs by the year listed at the left.

The computed spectrum of chlorine contents based on the cumulative data on Table 1.1-2 is presented, for selected years, on Table 1.1-3.

The average chlorine content for the set termed "average values" is 4.38 chlorine atoms per molecule, compared to:

Aroclor	Chlorine Content (atoms/molecule)
1242	3.67
1248	4.22
1254	5.35

Thus, the distribution as is comes closest to Aroclor 1248. However, if it is assumed that all mono- and di-chloro biphenyl were biodegraded or otherwise destroyed, then the average chlorine content of the "wild" PCBs would be 4.67, intermediate between 1248 and 1254. If the trichloro isomers were also subtracted out, then the composite average chlorine content would be 5.0, which begins to compare favorably with 1254.

1.2 Total PCBs Accumulation and Current Rates

As a rough estimate of the total PCBs currently available to the biota (in active transport, in biological systems, etc.) in the United States, the total of 172,800,000 lb. from Table 1.1-1 may be reduced by a factor

TABLE 1.1-1

PCB ENVIRONMENTAL LOAD BY AROCLOR TYPE

[In Thousands of Pounds]

	Aroclor Type					
	1242	1248	1254	1260	1016	Total PCBs
1930-56	18709	5395	5003	3559	-	32466
1957	1991	704	676	932	-	4303
1958	1431	1065	917	783	-	4196
1959	2298	1597	1142	1118	-	6155
1960	2955	1226	989	1191	-	6361
1961	4082	1745	1295	1347	-	8469
1962	3992	1452	1222	1258	-	7924
1963	3648	2062	1166	1503	-	8379
1964	4597	2160	1224	1664	-	9645
1965	5928	2260	1456	1096	-	10740
1966	7010	1932	1247	1041	-	11230
1967	7442	1794	1158	1111	-	11505
1968	7789	1881	1615	954	-	12239
1969	9182	2190	2172	997	-	14541
1970	10072	1536	2575	1044	-	15227
1971	3232	112	717	266	167	4494
1972	48	-	229	20	1045	1342
1973	310	-	399	-	1177	1886
1974	310	-	309	-	1098	1717
			Grand Total -			172.8×10^6 lbs.

TABLE 1.1-2

CUMULATIVE ENVIRONMENTAL PCB LOAD
BY CHLORINE CONTENT

[In Thousands of Pounds]

	Cl_1	Cl_2	Cl_3	Cl_4	Cl_5	Cl_6	Cl_7	Cl_8	Cl_9	Total
1956	561	2540	6210	8221	8936	4017	1759	285	36	32,565
1957	621	2813	6894	9174	10070	4709	2182	360	45	36,868
1958	664	3020	7487	10130	11311	5419	2558	423	53	41,064
1959	733	3351	8417	11584	13086	6388	3085	512	64	47,219
1960	822	3760	9465	13070	14805	7344	3632	607	89	53,580
1961	944	4326	10922	15135	17128	8529	4162	715	89	62,049
1962	1064	4874	12301	17048	19279	9640	4751	816	102	69,973
1963	1173	5389	13693	19095	21575	10835	5437	936	117	78,352
1964	1311	6030	15369	21473	34160	12153	6192	1069	134	87,997
1965	1489	6846	17436	24315	27123	13391	6728	1157	145	98,735
1966	1699	7796	19747	27328	30097	14568	7230	1240	155	109,966
1967	1922	8799	22154	30406	33080	15754	7755	1329	166	121,471
1968	2156	9850	24674	33673	36376	17053	8243	1405	176	133,710
1969	2431	11088	27639	37543	40368	18625	8782	1485	186	148,251
1970	2733	12428	30735	41462	44523	20362	9365	1569	196	163,478
1971	2837	12880	31723	42624	45657	20840	9517	1590	199	167,972
1972	2881	13073	32131	43086	45782	20928	9539	1592	199	169,314
1973	2938	13324	32663	43700	46046	21076	9563	1592	199	171,204
1974	2992	13561	33165	44272	46265	21193	9582	1592	199	172,821

TABLE 1.1-3

COMPUTED SPECTRUM OF CHLORINE CONTENT FOR WILD PCBs

[In Percent]

	Weight Percentage of Isomers Containing Cl_x								
	Cl_1	Cl_2	Cl_3	Cl_4	Cl_5	Cl_6	Cl_7	Cl_8	Cl_9
1956	1.7	7.8	19.1	25.2	27.4	12.3	5.4	0.9	0.1
1960	1.5	7.0	17.7	24.4	27.6	13.7	6.8	1.1	0.1
1965	1.5	6.9	17.7	24.6	27.5	13.6	6.8	1.2	0.1
1970	1.7	7.6	18.8	25.4	27.2	12.5	5.7	1.0	0.1
1974	1.7	7.8	19.2	25.6	26.8	12.3	5.5	0.9	0.1
Average Values	1.6	7.4	18.5	25.0	27.3	12.9	6.0	1.0	0.1

accounting for environmental degradation of less chlorinated isomers and other destruction processes. Based on Table 1.1-2, this should be about 20 to 30 million pounds, resulting in a total of free PCBs of about 150 million pounds.

Estimates by Nisbet and Sarofim[1] in 1972 for total PCBs available through air and water dissipation amount to 180,000,000 lb. since 1932. This value is within four percent of the above estimate of about 173million pounds based on the loss factors specified.

Application of the five percent loss factor to the 1974 Monsanto domestic sales yields an estimate of 1,720,000 lb. lost to the environment during 1974, to which should be added a maximum of 50,000 lb. lost from imported materials. The 1974 total of 1,770,000 lb. entering the environment in available forms represents about 1.5 percent of the total amount estimated above to be available to the biota in the U.S.

The 1,770,000 lb. per year amount may be compared with estimates for 1974 by Peakall[2] as follows:

Industrial leaks and disposal	- 880,000 to 1,100,000 lb.
Disposal in dumps and landfills	- 15,000,000 lb.
Total	- 16,000,000 lb.

The figure of about 10 percent loss from the above required to match the 1,770,000 lb. per year loss rate does not appear unreasonable. However, it should be pointed out that the 16,000,000 lb. per year figure for leaks and disposal from Peakall represents almost half of Monsanto's reported 1974 domestic sales, and must be questioned.

1.3 Current PCBs Disposal in Landfills and Dumps

The most important current sources of land-disposed PCBs are:

(1) Solid wastes from the manufacture of PCBs and electrical equipment (including reject capacitors and transformer internals);

(2) Failed capacitors;

(3) Capacitors in obsolete equipment; and

(4) Municipal solid wastes other than electrical (obsolete equipment, sewage sludge, paper, plastics, etc.)

One relatively minor source is the transformer service industry. This industry handles about 2×10^6 lb. of PCBs annually (roughly half new PCBs). Assuming that 5 percent of the PCBs handled ends up as solid wastes (from filtration, etc.), results in 0.1×10^6 lb./yr. of solid material entering the landfills.

The major sources are treated below. Land-destined solid wastes from production of PCBs, capacitors, and transformers are estimated to contain about 1.2×10^6 lb./yr. of PCBs. Reject capacitors and transformer internals add about 0.7×10^6 lb./yr. to landfills. Since most PCBs used in investment casting are eventually land disposed, this adds 0.4×10^6 lb./yr. Adding in 0.1×10^6 lb./yr. for transport and other losses brings the total of land disposed PCBs from production and first tier use to 2.4×10^6 lb./yr.

The failure rate for PCB-impregnated capacitors is estimated at one percent per year. On this basis, and assuming that the failed equipment enters a landfill or dump, then about one percent of the approximately 450×10^6 lb. of PCBs estimated to be in service in capacitors, or 4.5×10^6 lb./yr., can be expected to be landfilled.

Capacitors which have not failed but are contained in obsolete equipment (TV sets, light fixtures, etc.) also end up in land disposal sites. This applies to small capacitors only, and it is estimated that one percent of the total are discarded in this manner each year. The amount of PCBs involved is $(0.01 \times 270 \times 10^6)$, or 2.7×10^6 lb./yr.

The amount of PCBs currently contained in land-disposed municipal and industrial wastes other than that assignable to transformers and capacitors

is difficult to estimate. Approximately 160 million pounds of PCBs have been used in plasticizer and other "open end" applications or in "semi-closed" applications such as hydraulic or heat transfer systems. Most of this usage occurred between 1960 and 1972, and it is likely that up to 80 percent of the total is either free in the environment or already in land disposal sites. The rest of this material, estimated to be on the order of 30 million pounds can be thought of as being literally "in service" or used and awaiting disposal. A prime example of the latter is used carbonless copy paper currently residing in files and awaiting disposal or recycling. It is estimated that about seven percent of this 30 million pound reservoir, or 2.1 million pounds, enters land disposal sites each year.

In addition, it is estimated that 0.3 million pounds of free PCBs in the environment are added to land disposal sites each year from a variety of sources (sewage sludge, dirt, garbage, etc.). This brings the total for municipal and non-electrical wastes to 2.4×10^6 lb./yr.

Source	PCBs Added to Landfills and Dumps, lb./yr.
Wastes from Production and First Tier Use	2.4×10^6
Failed or Obsolete Capacitors	4.5×10^6
Capacitors in Obsolete Electrical Equipment	2.7×10^6
Other Municipal and Industrial Wastes	2.4×10^6
Wastes from Transformer Service Industry	0.1×10^6
Total	12.1×10^6

Peakall's[2] estimate of 16×10^6 lb. of PCBs for leaks and disposal in 1974 is about 30 percent higher than the above total. Peakall[2] also estimated a total of 50×10^6 lb. for leaks and disposal during 1970, which is over two-thirds of Monsanto's 1970 reported domestic sales of about 73×10^6 lb. In the absence of no other comparable data, we estimate a current land disposal rate of between 10×10^6 and 15×10^6 lb./yr.

It should be noted that several large first-tier users of PCBs are not currently land-filling their solid wastes, but are storing the drummed wastes on-site in anticipation of potential regulations on disposal of such wastes. The wastes being stored are estimated to contain at least 0.5×10^6 lb. per year of PCBs; this is included in the above analysis as being finally disposed of in landfills.

1.4 Release of PCBs via Industrial Effluents (Waterborne)

Based on data obtained from industry, the following average PCBs waste loads for water effluents were estimated:

PCBs Production	1117 lb./yr.
Capacitors	2139 lb./yr.
Transformers	62 lb./yr.
Total	3318 lb./yr.

This number is very small in comparison to the estimated 10×10^6 to 15×10^6 lb. per year of PCBs going to landfills.

The above values for industrial discharges do not include PCBs discharged to municipal systems for those plants having discharges to rivers (ten plants). In the production category, all discharge is to a municipal system.

It should be noted that the above waste loads represent current industrial practice. It may be assumed that, prior to knowledge of the adverse environmental effects of PCBs, much of the types of material currently land-filled was not disposed of properly and thus entered the environment directly.

1.5 Spills of PCBs During Transport

The most complete set of transportation spill data for PCBs available to us are for the period 6/74 to 6/75. The spills during transport and the quantities involved are as follows:

Location	Gallons Spilled
Trion, Ga.	117
Lawrence, Ala.	600
Erie, Pa.	120
Unknown	~100*
Total	937 (10,213 lb.)

In addition, during this period, three railroad capacitors failed in the New York City area, spilling on the order of 50 lb. each, or a total of 150 lb. Since this occurred during transit, we chose to add this amount to the above total, for a grand total of 10,363 lb. spilled in the transportation-related incidents. This probably represents a minimum figure, since transport of defective product units (capacitors and transformers) and of PCBs containing wastes can be expected to release PCBs.

On the basis of the above, a tentative number of 10,000 lb. per year of transportation-related spills of PCBs is advanced.

*Capacitor shipment via truck overturned; leading units and soaked dirt removed from site for subsequent incineration.

REFERENCES

(1) Nisbet and Sarofim; Environ. Health Perspect., 1, 21, (1972).

(2) Peakall, D.B., "PCBs and Their Environmental Effects", CRC Review, 5, Issue 4, 1975.

SECTION X

INADVERTENT AMBIENT REACTIONS AS ROUTES OF ENTRY OF PCBs INTO THE ENVIRONMENT

1.0 INTRODUCTION

This is a report of a preliminary investigation into the ways that PCBs could enter the environment even if they were no longer manufactured, imported, used or disposed of in the U. S. The work focused on the reactions of aromatic compounds, particularly the biphenyls, and how the conditions found in ambient surroundings in the environment could lead to the inadvertent and undesirable synthesis of PCBs. Specifically the major question addressed was whether chlorination water treatments could convert biphenyl contamination into PCBs.

Beyond that, there are questions of the likelihood of the breakdown of compounds such as DDT, followed by recombination to produce a PCB; the breakdown and rearrangement of dyestuffs to form PCBs; and other potential routes to the inadvertent synthesis of PCBs.

When a candidate route is identified, one needs then to determine the probability of that reaction proceeding, and the reaction rate. Also, the determination of what relevant pollution loads and concentrations occur in wastewater or clean water systems is an obviously important factor. For this study, the objective was primarily the identification of PCB formation routes which could be significant. Studies to determine kinetics of these reactions have not, to our knowledge, been performed.

2.0 COMMERCIAL BACKGROUND, PRODUCTION AND PROPERTIES OF BIPHENYL

2.1 Origins and Commercial Usage Background

Biphenyl (previously known as diphenyl and phenyl-benzene) was first reported in 1862 by Fittig. In 1867 Berthelot identified it as the main product generated when benzene vapors were passed through a hot tube. During 1925-1926, Dr. Herbert H. Dow carried out experiments with diphenyloxide, using it as a heat transfer fluid in a steam power process. In 1927, Theodore Swann of the

Federal Phosphorus Co. was asked to supply biphenyl in commercial quantities for use as a heat transfer fluid in the refining of lube oils. He set up a pilot plant for this purpose.

Soon after, the Swann Corp. developed the "Aroclor" series of PCBs. Early in the 1930's, Monsanto took over this production. About that time Dow also entered into the field, developing "Dowtherm A", a eutectic of 73.5% diphenyloxide and 26.5% biphenyl. Dowtherm has been a popular heat transfer fluid since that time.

During the 1950's, the advantages of using biphenyl as a mild fungicide in individual fruit wrappers were appreciated. Later, biphenyl was used as a kraft paper and boxboard impregnant and as a coating in closed fruit packages. In the 1960's, the usage as a carrier for dispersed dyes began. All of these biphenyl applications have continued to be important up to the present. Hydroxybiphenyls are also used as preservatives, and aminobiphenyls are used as dye intermediates.

2.2 Production Methods and Rates for Biphenyl

The two principal producers in the U. S., Dow and Monsanto, both synthesize biphenyl by the thermal dehydrogenation of benzene.

At temperatures of 700-850°C, benzene reacts by a homogeneous gas-phase reaction (in which a benzene molecule joins with another benzene molecule or with a polyphenyl molecule, liberating hydrogen and forming diphenyl or higher polyphenyls), or by a heterogeneous gas-solid reaction giving carbon and hydrogen. Most process development work has been directed to repressing the second reaction, which is known to be catalyzed by metals, particularly nickel, iron, and copper.

In 1964 biphenyl appeared on the U. S. market as a by-product of phenol produced by the partial oxidation of benzene. Benzene can be oxidized to phenol and biphenyl with hydrogen peroxide as the oxidant. Other more recent sources of biphenyl are as a by-product of the hydrodealkylation production of naphthalene, and as a by-product of the dealkylation of toluene to benzene. The latter stream,

one of the bottoms from the benzene plant, has a fuel value of 1 to 2¢/pound. However, a 97 mol % pure biphenyl can sell for about 6¢ per pound. By-product streams of this type are rich in biphenyl (typically 15-20% by weight). It can be seen that wastewaters from a process like this could be the source of methyl biphenyls found in water supplies.

Coal tar amounts to about 3% by weight of coal processed. Biphenyl is part of the heavy oil fraction, along with substituted naphthalenes, accounting for about 10% of the tar. Thus biphenyl generation could amount to one pound for every ton of coal processed for liquid fuels. As more emphasis is placed on coal conversion, the potential contribution to the environmental load of biphenyl may increase.

One degradation route to biphenyl was found. It is possibly of importance since it indicates a pathway from chlorinated terphenyls to PCBs. When vapors of terphenyls are mixed with hydrogen and heated to 650-850°C., benzene and biphenyl are formed. Best results are obtained when 4 to 6 mols of hydrogen per mol of terphenyl are used (based on a Monsanto Patent). Typical terphenyls are Dow's "Tarophen" and Monsanto's "Santowax".

The above indicates that PCBs could be produced by the incomplete incineration of chlorinated terphenyls, or possibly from terphenyls themselves in the presence of decomposing PVC or other source of chlorine.

There is no recorded production data for biphenyl for any period of time. Data for biphenyl is included in the "other non-fuel" uses of benzene, which includes BHC, anthraquinone, and several other compounds, in addition to biphenyl. This whole category has amounted to between 50 and 100 million gallons of benzene equivalent per year over the last 30 years.

One industry source estimate for the early 1970's was 5 million gallons of benzene equivalent going to biphenyl. Allowing for the recent burgeoning interest in dye carriers by doubling that value, there could be as much as 80 million pounds of biphenyl sold annually in the U.S. This does not seem too unreasonable since one localized area of Georgia accounts for 22 million pounds per year.

On balance, a "best estimate" of 50 million pounds per year current biphenyl use would seem appropriate.

2.3 Properties and Characteristics of Biphenyl

Biphenyl is a rather stable organic compound, and it is resistant to thermal and radiation degradation. Some of its properties are given in Table 2.3-1.

TABLE 2.3-1 PHYSICAL CONSTANTS OF BIPHENYL

Solubility in water at 20°C., mg/l	7.5
Melting point, °C	69.2
Freezing or congealing point of commercial product, °C	68.5-69.4
Boiling point at 700 mm, °C	255.2± 0.2
Flash point, °C	113
Fire point, °C	123
Ignition temperature of dust cloud, °C	650

	Temperature, °C			
	100	200	300	350
Vapor pressure, atm		0.251	2.436	5.509
Liquid density, g/cm^3	0.970	0.889	0.801	0.751
Heat capacity, cal/g	0.427	0.509	0.590	0.631
Heat of vaporization, cal/g	95	82	68	60

3.0 PROVEN BIPHENYL REACTIONS YIELDING PCBs

The two categories of biphenyl reactions examined in this section are the direct chlorination of biphenyl and the joining of two chlorinated phenyl groups into the biphenyl configuration.

3.1 Chlorination of Biphenyl

Although conflicting statements can be found in the literature, it is accepted that biphenyl is more easily chlorinated than benzene due to less resonance stability in the biphenyl. The behavior of biphenyl is complicated by the non-coplanarity of the two rings. Because of repulsion between the 2 and 2' hydrogen atoms, the rings of biphenyl itself have an angle of about 45° between their planes. This non-coplanarity greatly diminishes the resonance interaction between the rings, and is believed to make biphenyl more prone to reaction than benzene.

Since benzene can be brominated with bromine at 0 °C in the presence of iron, and also chlorinated with chlorine in the presence of iron at 50°C, we can expect significant reaction of biphenyl with chlorine in the presence of iron below 50°C. Also, solid biphenyl reacts with bromine vapor to give first 4-bromobiphenyl, and then 4, 4'-dibromobiphenyl. Biphenyl melts at about 70°C. The commercial production of PCBs by chlorination of biphenyl in the presence of an iron catalyst is conducted above 70°C in order to obtain and maintain the molten state for ease of transport and for better mixing with the added chlorine. The higher temperature conditions may also be important in the formation of the higher chlorinated homologs, but this is also dependent on contact time. The chlorination is exothermic.

The ease with which biphenyl may be chlorinated to two isomeric monochlorobiphenyls is best illustrated by an early description of a pilot plant synthesis by Jenkins, McCullough and Booth, of the Federal Phosphorus Company, in 1929.[1] They used a temperature just high enough to melt the biphenyl, and achieved iron catalysis by using iron filings. Schmidt and Schultz and Kramers had shown that antimony pentachloride was a catalyst for the reaction.[2, 3]

The method used by Jenkins and coworkers led to the formation of 2-chlorobiphenyl and 4-chlorobiphenyl. In this reaction some dichlorobiphenyl is always produced, with the amount depending on the temperature of chlorination and on the quantity of chlorine added. Higher temperatures during the chlorination produce higher percentages of dichlorobiphenyl. When the theoretical amount of chlorine for monochlorobiphenyl is added, considerable dichlorobiphenyl is formed.

The general conclusion derived from this synthesis evaluation is that it is quite reasonable to expect that chlorine contact with biphenyl at ambient temperatures will yield PCBs at a measurable rate. The effects of temperature, dilution by air or water, lack of iron catalyst, presence of other catalytic compounds, presence of UV radiation, and other reaction conditions present in the environment are not known.

3.2 Reactions Combining Phenyls to Produce Biphenyls

Two aromatic nuclei can be joined to form a biphenyl by interaction of a diazonium salt and a hydrocarbon (benzene) under the catalytic influence of metallic copper or zinc (Gatterman procedure). In the method developed by Ullmann, many biphenyl derivatives are made by the treatment of aryl halides with copper powder. The halogen atom must be reactive. NO_2 is an example of an activating group. These two procedures are of special interest because reactants similar to the above reactants, or their progenitors, have been found in public water supplies. Examples are mono-, di-, and trichlorobenzene and chlorinated nitrobenzene.

Hutzinger, Safe and Zitko synthesized twenty-three chlorobiphenyls using a number of different routes.[4] The compounds ranged from mono- to decachlorobiphenyl. The general procedure used involved the use of diazo compounds. The specific chloraniline, selected to give the desired PCB, is heated in concentrated hydrochloric acid to about 50°C, then cooled to -5°C and diazotized with a solution of sodium nitrite in water. The mixture is stored for 30 minutes at this low temperature, then filtered. The filtrate is added to cold, vigorously stirred benzene, and a solution of sodium acetate (or

sodium hydroxide) in water. The mixture is stirred for 12 hours at 25°C., and then the PCB is recovered from the benzene layer. As an example, by this method, starting with 2, 3, 4, 5 - tetrachloroaniline, they synthesized 2, 3, 4, 5 tetrachlorobiphenyl.

They also prepared decachlorobiphenyl by the exhaustive chlorination of Aroclor 1268. The Aroclor was mixed with twice its weight of antimony pentachloride, and heated for four hours at 150°C.

Wolf and Kharasch showed that irradiation of orthoiodophenol in benzene gave 2-hydroxybiphenyl with a 65% yield.[5]

The conclusion drawn from this review of the reactions of a number of aryls is that there are a number of low temperature reactions (0-50°C.) that are capable of yielding biphenyls. In addition, some of the reactants have already been identified as present in water supplies.

4.0 BIPHENYL USAGE IN HEAT TRANSFER FLUIDS, DYES AND PACKAGING

Although the prime usage for biphenyl is the production of PCBs, it also has important use in heat transfer fluids, as a dye carrier, and as a paper or paperboard impregnant.

4.1 Heat Transfer Fluids

In heat transfer fluids, for the temperature range 250-360°C, biphenyl is used alone, or in combination with other compounds. Dowtherm "A", or Diphyl in Europe, is the combination of biphenyl with diphenyloxide. A mixture of bi- and terphenyls was used as a coolant-moderator in the AEC prototype organic-liquid cooled nuclear reactor at Piqua, Ohio.

4.2 Dye Carriers for Polyesters and Polyolefins

Disperse dyes (dye and carrier combinations) are the most widely used dye type for unmodified polyesters. Dye uptake is rather slow, and frequently pressure-dyeing above 100°C is used. Also, carriers or accelerants like biphenyl are used to cause the fiber to swell and allow more rapid penetration of the dye into the fiber.

Polyolefin fibers are also difficult to dye. Their non-polar nature and impermeability are the problem properties. However, dye carriers such as biphenyl penetrate these fibers and leave the insoluble dye residue within the fiber. Of course, most of the carrier would be expected to leave the fabric in dye-setting and washing processes. Disperse-dyed polypropylene fibers generally lack the bright colors sought in apparel, but they are used in tufted carpets and upholstery fabrics.

4.3 Biphenyl as a Mold Preventative in Packaging

Biphenyl itself has been used for many years as a mild fungicide in citrus fruit wrappers and packaging. The 2-hydroxybiphenyl sodium salt has also been used as a preservative, germicide and fungicide.

The use of biphenyl as one ingredient in impregnated tissue for wrapping citrus fruit began in the Middle East, then grew in the U.S. An odor control agent was added since biphenyl has such a pronounced odor.

Practically all of the biphenyl containing coating is now applied to the inside of the corrugated cardboard cartons used for shipping citrus fruit; or the biphenyl is applied to a pad of sheets placed inside the carton.

It would be impossible to ship citrus fruit across the U.S. in cartons, without a blue mold preventative like biphenyl. Years ago, "orange crates" of open lattice wood were used to let air circulate through and reduce mold formation. However, this exposed the fruit to the drying effects of air, external molds, water, dirt, etc. The new sealed cartons prevent all these problems, but absolutely require a mold retardant. The coating on cardboard or in tissue consists of a petroleum jelly or similar base with about 15-20% of biphenyl.

During the mid-1950's, the FDA investigated the toxicity of biphenyl, and some of the results of this investigation emerged as a threat to the future of the $40 million/yr. segment of the kraft paper industry devoted to making the cardboard cartons, liners, wrappers etc. for citrus fruit shipping. The Institute of Paper Chemistry (IPC) was chosen to determine methods of analysis,

and to referee an investigation of the potential problem. As a result of the work by IPC, biphenyl was given a clean "bill-of-health" by the FDA and has continued in use.

4.4 General Biphenyl Occurrence in the Environment

The above descriptions of biphenyl usage indicate a potential for its widespread occurrence. Of particular interest here is the occurrence of biphenyl in industrial usages where water treatment by chlorination is practiced, as in paper recycling and dyeing operations.

5.0 PCBs GENERATION AND WASTEWATER EXPERIMENTS IN A MAJOR U.S. BIPHENYL USAGE LOCALITY

For the past three years, Dr. Peter Gaffney of the Biology Department of Georgia State University has been investigating the problems of biphenyl and PCBs contamination of a watershed in northwest Georgia. He has also conducted experiments on the conversion of biphenyl to PCBs. Support was provided by the Georgia Environmental Protection Division. He estimates that this locality uses about 22 million pounds per year of biphenyl as a dye carrier in carpet dyeing. This relatively small geographical area accommodates 250 to 300 mills representing 65% of the world's carpet and rug industry.

Also, W. C. Tincher of the Environmental Resources Center of Georgia Institute of Technology has been studying the problem of biphenyl effluents from polyester carpet manufacturing in Georgia. Other workers have been concerned with the residual odor of biphenyl in carpets.

In New England, R. A. Hites of MIT has been analyzing river water for biphenyl wastes from dyeing processes.

Dr. Gaffney originally became interested in the problems of biphenyl and PCBs in water when he was called to investigate a BOD problem at a municipal waste treatment plant. Two-thirds of the flow to that plant (4 million gpd out of a total of 6 million gpd) came from a carpet dyeing mill. When looking for agents that might affect the biomass in the activated sludge portion of the plant, two questions arose:

1. Could the biphenyl (used as a dye carrier) discharged from the mill be affecting the biota, since biphenyl is a known mold suppressant?

2. Could the biphenyl be converted to PCBs during waste treatment chlorination, and could the PCBs exert a harmful affect on the biota, as well as contribute toxic organics to downstream water supplies?

Although these studies are still underway, preliminary data indicate that PCBs can be formed in the suspected manner.

The original report of Gaffney's work told of finding 18 ppm of PCBs in the scrapings from the surfaces of trickling filter rocks in the municipal treatment plant.[6] At the time, no PCBs were detected in the influent.

This seemed a strong indication of PCBs formation within a municipal treatment plant. The plant was using about 350 pounds per day of chlorine for influent odor control and effluent disinfection.

When it was later discovered that there was an upstream transformer plant using PCBs, further testing indicated there were detectable PCBs in the intake water to the mill and the town.

Dr. Gaffney continued his previous work on chlorination of organics as they pass through municipal treatment plants.[7] The tests and data are considered preliminary at this time, and further reaction and analytical data are highly desirable.

In laboratory tests, detectable levels of PCBs were formed when 10 mg/l of biphenyl were added to deionized water, held at 20°C, and then 1 mg/l of chlorine was added and the reactants kept in contact for one hour. Fifteen peaks were formed in the electron capture chromatogram (a hexane in water control gave four peaks with the same treatment). When iron was included in the reaction mix, four more peaks were formed (total of 19). It is believed that these peaks are largely chlorobiphenyls. Addition of an Aroclor to the pure water resulted in the growth, by 50 fold, of the peak height for dichlorobiphenyl due to chlorination.

When municipal wastewater was analyzed before and after laboratory chlorination, as described above, the dichlorobiphenyl peaks increased in height by ten-fold.

Although the tentative conclusion from this work was that PCBs can be formed through chlorination of biphenyl in wastewater under laboratory conditions, extrapolation of the results to actual wastewaters from industrial sources is probably premature. Even more tenuous, but of equal interest, is the possibility of further chlorination of PCB molecules via chlorination.

However, it should be noted again that the use of biphenyl as a dye carrier leads less to its dissipation in products than to its eventual destruction or discharge as waste. Assuming that half of the biphenyl so used appears as waste, a biphenyl to PCB conversion of even 0.01 percent during chlorination treatment for the 22 million pounds per year of biphenyl in northeast Georgia corresponds to the generation of over 1,000 lb/year of chlorinated biphenyls in that area.

6.0 POTENTIAL DEGRADATION AND SUBSEQUENT REACTION OF DDT AND RELATED COMPOUNDS IN THE ENVIRONMENT TO FORM PCBs

It appears possible that there are a number of compounds in the environment that could be partially decomposed and then reacted with their own decomposition products, or with other reactants, to produce PCBs.

As early as 1969, Plimmer and Klingebiel reported that DDMU, dichlorobenzophenone, and dichlorobiphenyl, were all products of the photolysis of DDT or DDE in methanol at 260 nm ultraviolet radiation.[8] This conversion may be sensitive to reaction conditions. In the same year, Mosier, Guenzi and Miller did not observe formation of PCBs or DDMU when they subjected solid DDT or DDT in hexane to UV irradiation at 254 nm.[9]

Since that time, most researchers publishing on this topic have suggested the possibility of conversion of DDT to PCBs. Peakall and Lincer stated that the possibility that PCBs could be derived from DDT should be considered.[10] They did not believe this could occur in metabolic processes in tissues. However, they felt that UV catalyzed free radical reactions to form dichlorobiphenyl from DDT could be expected in the atmosphere.

Although they could envision tautomeric shifts leading to various isomers of dichlorobiphenyl, they could not theorize a route to more highly chlorinated biphenyls by these DDT reactions. They also pointed out that PCBs extracted from biological materials matched well with the PCBs found in Aroclors like 1254 (one-half pentachlorobiphenyl, and about one-quarter each of the tetrachloro and hexachloro homologs). Thus, if DDT degradation to dichlorobiphenyl were taking place, further chlorination would also have to take place, by some other reaction, to lead to the material found in biological specimens. Peakall and Lincer also point out that the ethane component between the two rings in DDT is the weakest part of the structure and is the site at which most transformations of DDT take place. The PCBs, not having that weak point between the two benzene rings, thus are expected to be more stable than DDT, which is the case. Maugh again reported on the DDT conversion potential, apparently unaware of the Plimmer and Klingebiel report, and showed the potential for vapor phase photolysis.[11]

Peakall, in his recent comprehensive review, "PCBs and Their Environmental Effects", does not cite other references for other mechanisms of DDT conversions.[12] However, Kothny, in a letter to the editor of Chemical and Engineering News, states a case for the formation of gaseous chlorine from particulate chlorides under the influences of ozone and solar radiation.[13] He states that the chloride loss from particulates, formed by the evaporation of water from sea spray, "has been known for some time". Kothny then goes on to attribute PCBs formation to the reaction between a wide range of aromatics that could be present in the atmosphere, and chlorine, formed as described above. He also suggests potential PCBs formation from all manner of waterborne aromatics by action of municipal and industrial chlorination of pure and wastewater.

7.0 COMPARISON OF POTENTIAL INADVERTENT AMBIENT REACTIONS

Of the types of reactions cited in this section as holding potential for inadvertent ambient production of PCBs, the possible chlorination of biphenyl during industrial and muncipal water and waste treatment appears to the authors to have the most significance. In general, the other reactions cited would

TABLE 8-1

PCBs Concentration in the Effluents of the Machinery & Mechanical Products Manufacturing

Subcategory No.	Manufacturing Operations	PCBs Concentration mg/l (1)		
		Min.	Max.	Avg.
1	Casting & Molding of Nonferrous Metals	0.2	5.1	2.1
2	Mechanical Material Removal	0.2	63.3	6.997
3	Material Forming - All Materials Except Plastics	0.2	63.3	9.867
4	Physical Property Modification	0.2	100.0	12.842
5	Assembly Operations	0.2	104.4	15.553
6	Chemical-Electrochemical Operations	0.5	2.8	1.65
7	Material Coating	0.2	224.8	18.241
8	Smelting and Refining of Non-ferrous Metals	0.2	18.0	9.1
9	Molding and Forming - Plastics	-	None	-
10	Film Sensitizing	0.3	123.9	28.136
11	Dockside Ship Building Activities (2)	-	None	-
12	Lead Acid Battery Manufacture	7.5	30.0	18.75

Note: (1) Information obtained from the Development Document for Effluent Limitations Guidelines for the Machinery & Mechanical Products Manufacturing EPA Contract No. 68-01-2914, Vol. 3, June 1975.

(2) No water effluent; all solid wastes.

effluents; however, evidence of the presence of chlorinated hydrocarbons was found. Effluent Guidelines study on Subcategory 10, Film Sensitizing Industry, is currently underway. According to the information presented in Table 8-1, this subcategory was demonstrated as having the highest levels of PCBs concentration in the outfalls. Verification sampling work to be conducted on these effluents will provide a further test of the validity of the data in Table 8-1.

It is considered quite likely that effluents from industries other than those directly involved with the production and process usage of PCBs may exhibit significant amounts of PCB contamination. Much of this contamination, if found, could be attributed to past usage of PCBs and products containing PCBs, although, as stated elsewhere in this report, current usage must also be considered a possibility. To our knowledge, no significant effort to determine the extent of PCBs contamination from such sources has been made.

require two steps (chlorination plus condensation of aryls or decomposition of DDT followed by recombination of selected fragments); they also would be expected to involve compounds present in relatively low concentrations compared with potential biphenyl concentrations in some industrial waste streams.

For all of these reactions, however, mono- and dichlorobiphenyls would be the expected products. Although these are believed by many researchers to be significant (especially in an aquatic environment), it is generally accepted that they are more easily biodegraded and less bioaccumulative in comparison to the more highly chlorinated PCB homologs. The possible formation of more highly chlorinated PCBs from mono- and dichlorobiphenyls is thus also of interest to the environmental PCBs problem.

8.0 PCBs FOUND IN THE EFFLUENTS OF THE MACHINERY AND MECHANICAL PRODUCTS MANUFACTURING INDUSTRY

For some time it has been suspected that PCBs could be found in the effluents of other industrial categories which are not recognized as being sources of PCBs entry into the environment. A review of data presented in the draft Development Document For Effluent Limitations Guidelines for the Machinery and Mechanical Products Manufacturing Point Source Category (EPA Contract No. 68-01-2914, Volume 3, June, 1975) indicates high concentrations of PCBs, in the order of 2 to 28 mg/l, in the effluent of the plants grouped in this category.

This group of industries encompasses 173 different product group segments manufacturing over 4000 different products in over 100,000 separate plants. These products include such varied goods as wire, tractors, x-ray equipment, sporting goods, automobiles, television picture tubes, and jewelry.

Because of the variations in manufacturing operations from plant to plant, categorization of this industry was based on the manufacturing processes utilized, whereby a specific plant was defined by the applicable process subcategories which describe its overall operation. Rationale used in subcategorizing this group of industries was that the manufacturing processes, not the product, generate the effluent discharge.

Based on the above, this group of industries was divided into the following twelve general manufacturing subcategories:

Subcategory 1	Casting and Molding - Metals
Subcategory 2	Mechanical Material Removal
Subcategory 3	Material Forming - All Materials Except Plastics
Subcategory 4	Physical Property Modification
Subcategory 5	Assembly Operations
Subcategory 6	Chemical-Electrochemical Operations
Subcategory 7	Material Coating
Subcategory 9	Molding and Forming - Plastics
Subcategory 10	Film Sensitizing
Subcategory 11	Dockside Ship Building Activities
Subcategory 12	Lead Acid Battery Manufacture

The PCBs concentrations in the raw waste from the overall machinery and mechanical products manufacturing point source subcategories, as abstracted from the abovementioned draft Effluent Guidelines Document, are presented in Table 8-1. This table shows the minimum, maximum and mean PCBs concentrations as found from sampling and analysis work conducted by the contractor on 240 raw waste streams in the point source category. As reported in this document, all samples were taken downstream of the manufacturing processes, but prior to any treatment.

It can be seen from Table 8-1 that PCBs concentrations in the effluent from this group of industries are much higher than those reported for the major PCBs user industries (capacitor and transformer industries). Within the machinery and manufacturing industries PCBs could be used in paints, inks and plastics, as wax fillers in casting operations, as hydraulic and heat transfer fluids, and in lubricants.

It should be mentioned, however, that there are questions as to the validity of the analytical techniques used during this study. Subsequent studies conducted by Versar Inc. on Subcategory 12 (lead acid battery manufacture) under EPA Contract 68-01-3273 have indicated no detectable levels of PCBs in the

REFERENCES

1. Jenkins, R.G., McCullough, R., and Booth, C.F. (Federal Phosphorus Company), Ind. and Eng. Chem., 22, 31 (January, 1930).

2. Schmidt, H., and Schultz, G., Ann. Chem., 207, 338 (1881).

3. Kramers, K., Ibid, 189, 142 (1877).

4. Hutzinger, O., Safe, S., and Zitko, V., Bull. of Env. Contamination and Toxicology, 6, 209 (1971).

5. Wolf, W., and Kharasch, N.; J. Org. Chem., 26, 283, (1961).

6. Gaffney, P.E., Science, pg. 367, February, 1974.

7. Ingols, R.S., Gaffney, P.E., and Stevenson, P.C., J. Water Pollut. Control Fed., 38, 629, (1966).

8. Plimmer, J.R., and Klingebiel, U.I., Chemical Communications, 1969, p. 648.

9. Mosier, A.R., Guenzi, W.D., and Miller, L.L., Science, 164, 1083 (1969).

10. Peakall, D.B., and Lincer, J.L., Bioscience, 20, 958, (1970).

11. Maugh, J.M., Science, May 11, 1973, p. 578.

12. Peakall, D.B., "PCBs and Their Environmental Effects", CRC Reviews, 5, Issue 4, 1975.

13. Kothny, E.L., Letter to the Editor of Chemical and Engineering News, January 19, 1976, p. 5.

SECTION XI

MOVEMENT OF PCBs IN THE ENVIRONMENT — GENERAL DISTRIBUTION MODEL

1.0 INTRODUCTION

Thus far in this report, the history and current status of PCBs production and usage, treatment and disposal aspects, and gross estimates of current environmental distribution have been presented and discussed. Transport of PCBs within the environment is extremely important in the assessment of future environmental distribution of PCBs. In turn, knowledge of future PCBs distribution will allow the assessment of potential regulation of PCBs production and usage. Projection of future biological effects also depends upon the distribution of the substance of interest.

Transport of PCBs between soil, water, sediments, the biota, and the atmosphere is of obvious local environmental importance. Measurable amounts of PCBs have been found in Antarctic ice, showing that atmospheric transport over long distances does occur. Transport phenomena at the various phase interfaces are of obvious importance to the mobility of any environmental contaminant, but in most cases, and this is particularly true of PCBs, such transport properties are not known and have not been treated successfully in a theoretical manner. On the other hand, analysis of the transport and distribution of a given contaminant requires sufficient knowledge of basic transport processes on which to base reasonable estimates; the estimates can then be evaluated using an internally consistent model and available experimental data.

A simple, first-order mass balance model has been constructed to treat the overall PCBs economy of an artificially bounded region of the lithosphere. In order to test the validity of the model, it was applied to Lake Michigan and the associated drainage basin. Lake Michigan was selected for this application because of the existence of a considerable body of

recent data on PCBs concentrations, because of the environmental and commercial significance of PCBs contamination in Lake Michigan, and because this lake, in spite of its size, represents a relatively closed system (estimated water retention time of 90 years).

The total environmental load of PCBs, and its variation with time, represents a very important input to the mass balance model. An analysis of available data was performed to provide this input, one important result of which was an estimate of the variation of atmospheric fallout rate with time.

Atmospheric fallout appears to be the most important source of PCBs entering Lake Michigan, although this may not be the case for other areas (the lower Hudson River is one possible exception). For example, in 1974, atmospheric fallout onto the lake and its drainage basin accounted for approximately 85 percent of the PCBs input to the lake.

The rationale for the model is described in Section 2.0 below. Subsequent sections describe the application to Lake Michigan and the results and conclusions therefrom. The development of the model is presented, in full, in Appendix D to this report, and the supporting data used are tabulated in Appendix E.

2.0 RATIONALE FOR MODEL DEVELOPMENT

The first order model derives basically from the assertion that the total of PCBs entering a bounded region of the lithosphere must be fully accounted for by: (1) Incorporation into specific phases of the bounded region; (2) Loss from the region via mass transport; and (3) Degradation by processes operating within the region.

In application, the region under study is selected to be sufficiently large and well defined that adequate averaging can be accomplished. The Lake Michigan area, which meets the above criterion, was selected as a suitable region for study. The region included the nominal drainage basin of the lake

in order to provide an estimate of the PCBs entering the lake from runoff.

After suitable boundaries were defined, an overall mass balance was constructed. The source function was constructed so as to account for all point and non-point sources. The distribution over the various internal phases of the system (aqueous solution, biota, and sediment) was then estimated. Additional terms were introduced to account for PCBs loss from the region due to mass outflow and surface evaporation. There was apparently no need to introduce a term to account for degradation since such processes are thought to be of small importance for PCBs. The form of the mass balance was then as follows:

$$B(t)\ \Delta t = \Delta M_W + \Delta M_B + \Delta M_S + \Delta M_O + \Delta M_E \qquad (2\text{-}1)$$

where:

- $B(t)$ is the source or driving function which describes the input rate for PCBs;
- ΔM_W is the change in the mass of PCBs dissolved in the aqueous phase of the region;
- ΔM_B is the change in the mass of PCBs contained within the biota of the region;
- ΔM_S is the change in the mass of PCBs contained within the sediment of the region;
- ΔM_O is the mass of PCBs carried out of the region by (water) mass transport; and
- ΔM_E is the mass of PCBs carried out of the region by evaporation (codistillation).

2.1 Time Dependence of the PCB Input Rate [B(t)]

The distribution of PCBs between phases within the region is governed by processes which are assumed to act independently of the actual concentrations involved. The time dependence of equation 2-1 is therefore contained in the driving function, [B(t)].

Sensitive analytical methods for PCBs have been available only for a few years; consequently a sufficiently reliable and detailed data base to allow the direct determination of B(t) is not available. In view of this, it was necessary to construct a model which could be fitted to a direct estimate of B(t) for a specific time, in order to approximate the appropriate time dependence of B(t). The details of the computation by which B(t) was determined are contained in Appendix D (Section 2). For the purposes of this summary, it is sufficient to state that the major input of PCBs to the region selected (Lake Michigan) was from atmospheric fallout; thus the time dependence of B(t) was estimated from knowledge of the time dependence of the fallout.

Table 2.1-1 is a summary of the input PCB from all sources during the period 1973-1974 and is a summary of the detailed data which are presented, along with suitable citations to the sources of these data, in Appendix E of this report.

Table 2.1-1

Summary of PCB Input Sources (1973-1974) to Lake Michigan

Point Sources	1.6×10^3 lbs/yr
Lake fallout	6.4×10^3 lbs/yr
Basin fallout*	5.4×10^3 lbs/yr

Then $B(t) = B(1973\text{-}1974) = 13.4 \times 10^3$ lbs/yr

* It is assumed that 50 percent of the basin fallout actually enters the lake as input[1]

3.0 APPLICATION OF THE MODEL TO LAKE MICHIGAN

The results of an analysis of PCBs distribution within Lake Michigan are summarized in Table 3.0-1 (The details of the computation are given in Section 3 of Appendix D).

Table 3.0-1

Overall PCBs Balance for Lake Michigan Area During the Period 1930-1975

Total Input	1.49×10^5 lbs.
Total in Solution (Water)	1×10^5 lbs.
Total in Biota	3.64×10^3 lbs.
Total in Sediment	1.7×10^4 lbs.
Total in Outflow	9.07×10^3 lbs.
Total Evaporated	1.93×10^4 lbs.

The last entry in Table 3.0-1 indicates that some 13 percent of the total input to the lake has been lost by evaporation (codistillation) from the surface.

The concentration of PCBs in the aqueous phase and the (average) concentration in the biota were calculated; the results are displayed in Table 3.0-2.

Table 3.0-2

Derived PCB Concentrations in Lake Michigan Water and Biota Over the Period 1930-1975

Date	C_{water} (ppt)	C_{biota}* (ppt)
1930	0	0
1935	4.9×10^{-4}	1.97
1940	1.34×10^{-2}	5.36×10^2
1945	7.12×10^{-2}	2.84×10^3
1950	0.28	1.12×10^4
1955	0.68	2.72×10^4
1960	1.60	6.4×10^4
1965	2.92	1.17×10^5
1970	5.35	2.14×10^5
1975	9.10	3.64×10^5

*The average biotic concentration is taken as $4 \times 10^4 \bar{C}_{water}$.

The values presented in Table 3.0-2 are lake-wide averages so that considerable variations from these values are to be expected from point to point within the lake; for instance between the northern portions and the heavily contaminated regions on the southwestern shore. In addition, because of the considerable spread in species-specific concentration factors (and the wide variation in intra-species concentration factors) it can be surmised that PCB concentrations in higher predators could easily have exceeded the ppm level by 1960.

4.0 RESULTS AND CONCLUSIONS

4.1 Results

Even though the model used is only first order, it is apparently able to describe the relative significance of the natural processes which control the distribution of PCBs. The strong focus on fallout as the primary input source of PCB to Lake Michigan suggests the need for further study of the nature of the processes by which PCBs become airborne and thus become part of the available atmospheric reservoir.

The attempt to model the atmospheric reservoir of PCBs, discussed in Appendix D (Section 2), yields results that indicate significantly greater cumulative atmospheric loads than the preliminary estimate, made by Nisbet and Sarofim,[2] of a cumulative atmospheric reservoir of 3×10^4 tons up to 1970. The estimate of Nisbet and Sarofim leads to a half-life, from the model, for PCBs in the atmospheric reservoir on the order of eight years. This value is considerably in excess of the reported lifetime measurements, on the order of 20 to 40 days, for atmospheric PCBs.[3] However, the observation that significant levels of PCBs are found in present snowfalls and in packed snow in the Antarctic[4] suggest that the applicable half-life may indeed be considerably longer than 20 to 40 days.

It is suggested that further refinement of the environmental distribution model presented in Appendix D (Section 2) will lead to a resolution of

this apparent discrepancy. This refinement will focus attention on the nature of the physical processes involved in atmospheric transport of PCBs and may suggest methods of reducing PCB fallout in the future.

The observation that evaporation and/or codistillation seems to be a significant process by which PCBs are returned to the atmosphere is of importance. It should be noted that the magnitude of the evaporation rate constant necessary to achieve mass balance in Lake Michigan is in excellent agreement with that computed from the simple kinetic theory of gases and also with that computed from the theory of codistillation discussed by Mackay and Wolkoff[5] (see Section 4 of Appendix D for a detailed treatment of this subject).

The observation that the PCB input to Lake Michigan from point sources seems to be a rather small part of the total input suggests that reduction of point source PCB effluents may only slowly correct the present problem.

4.2 Conclusions

The first order mass balance model described herein seems useful in describing the historical situation as it explicitly addresses the question, "How did we get here?" The model requires refinement before it can be used to allow a reasonable estimate of future conditions. Significantly more detailed data are required as to the temporal variation of inputs and concentrations as well as on the internal transport processes by which localized concentrations are smoothed and distributed over the whole body. While the present model seems to deal very well with the situation that obtains during an interval of rising aqueous concentrations, there seems to be little experimental or theoretical guidance as to what will happen if, in the future, aqueous concentrations begin to fall. It is not known whether the biota and the sediments will act as reservoirs to return their PCB loads to the system. The processes, if any exist, which will eventually remove or inactivate the PCBs already in the lithosphere are not known.

The application of this model to the situation in Lake Michigan seems successful. It will be of interest to apply it to regions which are more complex or of larger scale.

5.0 BIBLIOGRAPHY

1. Ruttner, F., Fundamentals of Limnology, Univ. of Toronto Press (1952).

2. Nisbet, C. T. and A. F. Sarofim, Environmental Health Prospectives, Exp. 1:21-38 (1972).

3. a. Sodergren, A., Nature 236:295-397 (1972).
   b. Risebrough, R. W., et al; Nature (12/14), 1098-1102 (1968).
   c. Harvey, G. R., et al; J. Marine Research 32(2):103-118 (1974).
   d. Harvey, G. R. and W. G. Steinhauer, Atmospheric Environment, 8(8):777-782 (1974).

4. Peel, D. A., Nature 254 (3/27):324-325 (1975).

5. Mackay, D. and A. W. Wolkoff, Env. Sci. & Tech. 7(7):611-614 (1973).

SECTION XII

REGULATORY ACTIONS ON PCBs

1.0 INTRODUCTION

The risk of increased accumulation of PCBs in the environment as well as appreciation of the difficulties involved in imposing workable environmental controls in most end-use manufacturing operations have led some manufacturers and a number of government agencies to take steps to regulate PCBs or to restrict some uses of PCBs where emission risks are obviously quite uncontrollable.

1.1 Measures Taken by the Manufacturers

In 1971, Monsanto Company, the major producer of PCBs, instituted a program which led to voluntary restriction on sales by the Monsanto of PCBs for all uses except the manufacture of sealed electrical equipment (transformer and capacitor applications). Sales for heat transfer applications were phased out in 1972 while sales for other non-electric applications were discontinued in 1971. As a result, current production related to point source discharges of PCBs are more controllable than in years prior to 1971 when PCBs were widely used in thousands of "Open-End" and "nominally closed" operations.

Furthermore, by 1971, at Monsanto's suggestion, the capacitor and transformer industries formed a standards committee. The members of the committee include representatives from the three affected industries, EPA, Department of the Army, Department of Agriculture, the Tennessee Valley Authority, the National Bureau of Standards, and the General Services Administration. Also represented were the Certified Ballasts Manufacturers Association, the Electronic Industries Association, the Institute of Electrical and Electronic Engineers, and the National Electrical Manufacturers Association. In the fall of 1972, under the auspices of the American National Standards, this committee published PCB handling and disposal guidelines (ANSI-C107-1-1974). This document establishes procedures for labelling, shipping, general handling and proper disposal of liquid and solid materials containing PCBs. This standard

has been proposed also by NEMA and is currently being used voluntarily by the transformer and capacitor industries.

The above measures taken by the manufacturers could be effective in PCB control if they were supported, implemented and enforced by the Federal Government.

1.2 Measures Taken by the U.S. Government

The Government of the United States has taken a number of steps with the objective to reduce the PCBs content in foodstuffs and reduce emissions from all sources. The following Federal laws are relevant for the regulation of PCBs.

1.2.1 Food, Drug and Cosmetic Act (21 U.S.C. 301 et seq.)

The Food and Drug Administration has set tolerances for PCBs contamination of animal feeds, foods, and food packaging in its final rule-making document published on July 6, 1973 (Federal Register, Vol. 38, No. 129). These tolerances, expressed as parts per million are as follows:

(1)	Milk (fat basis)	2.5
(2)	Dairy products (fat basis)	2.5
(3)	Poultry (fat basis)	5.0
(4)	Eggs	0.5
(5)	Complete and finished animal feeds for food producing animals	0.2
(6)	Animal feed components	2.0
(7)	Fish and shellfish (edible portion)	5.0
(8)	Infant and Junior food	0.2
(9)	Paper food - packaging material	10.0

The Food and Drug Administration provides, upon request, the analytical methods used for enforcing these tolerances.

The FDA enforces the FDC Act by various means, including inspections of food establishments to determine whether the provisions of the Act are being violated. These inspections include the collection and analysis of food samples. Some of the samples are taken by FDA on a routine surveillance

basis to determine the presence of specific contaminants. However, the actual number of FDA conducted routine sample and analyses is few and this agency relies heavily on information on the known or suspected existence of specific instances of food contamination.

1.2.2 The Egg, Meat and Poultry Acts

The Consumer and Marketing Service of the U.S. Department of Agriculture (USDA) administers three acts relevant to the PCB problem: the Egg Products Inspection Act (P.L. 91-597); the Wholesome Poultry Products Act (P.L. 90-492); and Wholesome Meat Act (P.L. 90-201).

These authorities apply to meat, egg or poultry products from the time they reach the processing plant until they are purchased by the consumer. Once they leave the plant, they are also under the FDC Act.

The Department of Agriculture uses FDA guidelines for its Egg, Meat and Poultry Acts.

1.2.3 The Clean Air Act (42 U.S.C. 1857 et seg.)

Mr. David Young of the Southern California Coastal Water Research Project in a report prepared as part of an ORD (Environmental Research Center - Corvallis) contract acknowledges that the air contributes about one-third of the total PCB loading of the ocean. His conclusion that air is a significant route of PCB transport is based on effluent and aerial fallout measurements made in the coastal areas of Southern California.

The current understanding is that air transport of PCBs is a contributor to the PCB loading of other media. However, the conclusion reached by the pollutant strategies board of the Strategies and Air Standard Division is that the air act of 1970 is not an effective legislative measure for control of PCBs; but that monitoring for PCBs should be considered for control. The recommendation made at that time was to control PCBs by regulating the production, use and disposal of PCB-containing products.

The general authorities contained in the clean air act are not applicable to the majority of PCB discharges since PCBs from most PCB applications,

such as for closed electric systems, are not emitted into the air by the operation of industrial and municipal facilities. In these applications, PCB emissions are associated with accidental losses and waste disposal in landfills. Additionally, PCBs enter the air via the burning of refuse containing PCB waste products. These types of air emissions can be controlled only by preventing PCB products from being incorporated into the refuse. Control of emissions from landfills may require specifications on how waste is covered and, in some cases, the application of plastic materials to prevent sublimation. However, in the case of PCB applications for the investment casting category, PCBs can enter directly into the environment from the operation of furnaces which are used for purposes of setting the mold and removing the wax from the mold. In this latter application, the air act can be used as an important tool for the regulation of PCB entry into the environment.

1.2.4 Federal Water Pollution Control Act (33 U.S.C. 466 et seg.)

Section 304(a) of FWPCA

Section 304(a) of the Federal Water Pollution Control Act (FWPCA) authorizes the Administrator of EPA to enforce state water quality standards established by the States and approved by the Federal Government, if the State is not adequately enforcing the standards.

In 1973, water quality criteria were proposed to limit PCBs to 2 ppt in ambient waters. The 1973 proposed level has been more recently reduced to 1 ppt due to evergrowing concern on the health and ecological effect of PCBs and on the basis of further review of available data.

Section 307 (a) FWPCA

A national effluent standard for PCBs has been proposed under Section 307(a) of FWPCA.

Section 311 of FWPCA

In 1974, the Office of Air and Water Programs acted to minimize accidental spills of PCB through the enforcement of Hazardous Substances Section of the Water Pollution Control Act. Currently, pursuant to Section 311 of this

act, proposed guidelines on the levels of harmful quantities of PCBs accidentally released into navigable waters and rates of penalties for such spills are being developed.

Section 304(d) of FWPCA

Section 304(d) of the effluent guidelines promulgated for several industrial categories contain limitations on PCBs. For example, effluent guidelines promulgated for the steam electric power generating category contain limitations of "No Discharge" for PCBs. Furthermore, EPA reports that NPDES permits limiting PCB discharges have already been issued for several facilities.

1.2.5 The Refuse Act of 1899 (33 U.S. C.407)

Section 13 of the 1899 Refuse Act forbids the discharge of any wastes, other than municipal wastes, into navigable waters without a permit. This act would be an effective tool in the control of PCB discharges into the waterways if the permit program required the reporting of PCBs as a separate item. Presently this is not a requirement.

1.2.6 The Occupational Safety and Health Act (29 U.S.C. 651-678)

Chemical hazards in the workplace are regulated under the Occupational Safety and Health Act (OSHA). The Secretary of Labor, in cooperation with the Secretary of Health, Education and Welfare, is authorized to set and enforce occupational safety and health standards applicable to businesses affecting interstate commerce.

In Title 29, Section 1910.93, the limits set for chlorodiphenyl compounds as an air contaminant are 1 mg per cubic meter for Aroclor 1242 and 0.5 mg per cubic meter for Aroclor 1254, based on 8 hours average exposure. The Department of Labor could enforce these limits on PCBs.

1.2.7 Act to Regulate Transportation of Explosives and other Dangerous Articles (18 U.S.C. 831-835)

The Department of Transportation (DOT) regulates the transport of hazardous substances under the Act to regulate transportation of explosives

result, PCB is being imported by a few companies for use in several "open-end" or "nominally-closed" applications.

In 1972, with hopes to bring about a multi-national understanding on PCB uses, the United States asked the Organization for Economic Cooperation and Development (OECD) through its Environment Committee to review national policies on PCBs and also identify products moving in international trade which contained PCBs. In October, 1972, OECD, whose members include all major western industrialized countries plus Japan and Australia, met to discuss the U.S. proposal to control manufacturing and trade of PCBs.

In the October meeting the OECD Council decided that for adequate protection of health and environment, PCBs should be controlled by the actions of individual member countries. It was agreed that in order to insure that home production was not substituted by imports, control action by governments through licensing or other means was essential. It was further recognized that means to insure proper collection of used materials, safety in transport of raw PCBs and assessment of substitutes for PCBs were of utmost importance.

Details on the council's decisions were issued on February 14, 1973. The major thrust of the decision was:

A. PCBs should be used for industrial or commercial purposes in the following applications:

- As dielectric fluids in transformers and capacitors
- In heat transfer applications (other than that for applications in foods, drugs, feeds and veterinary products)
- As hydraulic fluid in mining equipment

With respect to the above uses, the OECD Council recommended that PCBs should only be used if adequate environmental controls were exercised and when the requirement for non-inflammability outweighed the needs.

B. Manufacture, use, recovery, disposal, import and export of PCBs should be controlled and regulated. Special labelling for bulk PCBs and PCB-containing products should be instituted

and safety specifications on containers and transport should be established.

C. Manufacture, import, and export of PCB-containing products should be controlled and efforts should be directed to eliminate the use of PCBs in "open end", "nominally-closed", and small capacitor applications.

D. Amount of material manufactured, exported, imported, incinerated and consumed by PCB type should be reported and any substitute used for PCB should be identified, characterized and defined.

The decision of OECD leaves it to the member countries to go beyond the council's agreements and it further encourages the governments to phase out PCB uses wherever possible. OECD council's decision or even more stringent measures are currently being exercised in all member countries.

1.4 Measures Taken by Foreign Governments

The measures taken by foreign governments are, in some instances, quite severe; especially in Japan, where a large scale poisoning episode, resulting in the disease syndrome "YUSHO", occurred in 1968 (after a heat transfer fluid leaked in a rice-oil pasteurization plant). In other countries, like the Netherlands, the control measures are quite informal. The main thrusts for PCB control are found in two main areas; those taken by the manufacturers and those required by the legislative process.

1.4.1 Measures Taken by Manufacturers - Limitations of Sales

Several nations have voluntarily limited sales of PCBs. The spectrum of limitation ranges from restrictions to specific fields of manufacture that are considered to be non-polluting or controllable to total suspension in the manufacturing process.

Since 1972, Japan has banned production and importation of PCBs; the United Kingdom has restricted sales of PCBs to all applications with the exception of their usage as a dielectric fluid, while Germany has lessened

and other dangerous articles. Under CFR Title 49, Subpart G amended February 27, 1973, DOT classifies poisonous substances into three categories:

Class A - highly poisonous material
Class B - moderately poisonous material
Class C - irritating material

The responsibility for insuring that this standard is met remains with the manufacturer and the shipper.

1.2.8 Federal Insecticide, Fungicide, and Rodenticide Act (FIFRA) (7 U.S.C. 135-135K)

On October 29, 1970, the Pesticides Regulation Division, administered then by the Department of Agriculture, issued a notice (PR Notice 70-25) to all pesticide manufacturers and distributors to eliminate the use of polychlorinated biphenyls and polychlorinated terphenyls from their formulation and products. Presently, there should be no pesticides on the market or in use containing PCBs.

Under the FIFRA act, all pesticides shipped in interstate commerce must be registered with the EPA. Presently, EPA can refuse to register a product if it will cause injury to humans or the environment if used as directed. A product already registered with EPA can be cancelled if it is found that it no longer meets the criteria of registration.

Congress is currently considering bills to renew the FIFRA act. More than 20 amendments to FIFRA are pending in the House and Senate. One of these amendments, if adopted, will give the Secretary of Agriculture the power of veto over EPA by requiring USDA concurrence in procedures leading to pesticide cancellation or changes in classification or regulation. This amendment will loosen EPA's controls on dangerous pesticides.

1.2.9 Needs for Federal Control

It can be summarized that currently four government agencies, the Monsanto Company and NEMA comprise the regulatory forces restricting the use and distribution of PCBs. EPA, OSHA, FDA and USDA have authorities to regulate

and monitor food levels, disposal into waterways and housekeeping and safety practices in the work place. EPA forbids the use of PCBs in pesticides and regulates their discharges into the waterway. OSHA can regulate PCB hazards in the work place. FDA forbids PCB use in food processing machinery and limits PCB levels in food, feeds and paper food-packaging material. USDA follows FDA guidelines in egg, meat and poultry products. Monsanto manufactures more degradable PCBs and sells them only for selective uses, and NEMA recommends standards and guidelines for handling and disposal of PCB containing materials. Each of these available authorities has a limited focus and is inadequate to prevent more PCBs from entering the environment.

Both Monsanto's and NEMA's actions are voluntary and have no law behind them for enforcement. The government has no power to control and restrict imports of PCBs and if it desires to restrict the use of PCBs in selected applications, it has no authority to impose this restriction on any manufacturer.

The above actions can only be implemented through the proposed Toxic Substances Control Act (TSCA). TSCA would give EPA the needed authority for formal banning of certain PCB uses and sanctioning National Standards and Guidelines for handling and disposal of PCB containing products. Thus EPA could deal with the PCB problems in a far more orderly and effective manner. Additionally, the TSCA would enable EPA to require testing for health and ecological effects of new chemicals which are being proposed as substitutes for PCBs. Thus, this measure could prevent new chemicals from creating health and ecological problems similar to those from PCBs. This preventive approach of controlling chemicals is a more reasonable and cost effective method than the current approach of corrective measures after the damage has been done. Therefore, the passage of the Toxic Substances Act by Congress is an important step in dealing with problems such as PCBs.

1.3 International Decisions and Agreement

There are currently no regulations to restrict the importation of PCBs as a chemical for use in applications banned by the Monsanto Company. As a

this restrictive measure to include the heat-transfer and hydraulic-fluids industries.

1.4.2 Measures Taken by Some Governments

1.4.2.1 PCB Producing Countries

Actions taken by governments differ widely, ranging from acceptance of the measures taken by the manufacturers to a more strict regulation.

France

The government has taken no active legislative action and has accepted the local manufacturers decisions. These include:

- Complete cessation of sales for heat transfer purposes, in pharmaceutical and food industries, paper production of carbonless copying paper, marine paints and cutting oils.
- Providing information to manufacturers about the dangers of PCB, with a view to cancelling their use in or on products in contact with foodstuffs.

Germany

The government is taking the approach of supporting the manufacturers' decision to stop selling PCB and is pursuing the voluntary signing of bilateral agreements to restrict the amount of imports. Additionally, tolerances of PCB in foodstuffs are being established.

Japan

PCBs have been under governmental control since 1972. There have been practically no production, import or export of PCBs in this country since 1972. The two companies, Kanegafuchi Chemical and Mitsubishi-Monsanto, which had been producing PCBs in Japan ceased their operation and suspended their sales in 1972. One exception has been the production of PCBs for railroad transformers which was discontinued in September, 1973. The use of

existing stocks in railroad transformers is permitted, subject to the conditions that there be no discharge to the environment. Beginning in 1976, paper plants will be prohibited from accepting PCB contaminated paper for recycling purposes and they will be required to build treatment facilities to meet the general discharge standards.

Imports of equipment using PCBs have been decreased drastically since 1972. For these products importers must cooperate with the users to ensure that the components containing PCBs are properly disposed.

Manufacturing of PCBs are rigidly controlled by the Ministry of International Trade and Industry (MITI). Any company who desires to manufacture PCBs must apply to MITI for a permit. The Japanese government anticipates a total ban on PCBs in 6 to 10 years.

These efforts have had remarkable results, and the environmental levels of PCB in Japan have subsided and are expected to continue diminishing.

United Kingdom

The government is taking no official action and is accepting the decisions of the manufacturers. Additionally, there is a high duty on imported PCBs (about 23%).

1.4.2.2 Non-Producing Countries

Canada

Initial activities are under way to collect necessary data for restricting PCBs pursuant to a new Environmental Contaminants Act which should be enacted by 1976.

Finland

The use of carbonless copying paper is totally banned and legislation is being proposed to require prior authorization for the use of PCBs by the Ministry of Social Affairs and Health. Furthermore, compulsory labelling and disposal instructions are being introduced.

Netherlands

A gentleman's agreement is in effect that PCBs will no longer be used in the manufacture of paints, inks, lacquers, adhesives, resins, wire and cable coatings, lubricating oils, hydraulic fluids and copying paper.

Norway

Since October 1971, only the Ministry of Social Affairs can authorize the use of PCBs.

Sweden

Since June 1, 1972, only the environmental protection board can authorize the use of PCBs or compounds containing PCBs. Furthermore, compulsory labelling and identification of PCB content on the wrappings have been introduced.

Switzerland

Since October 1972, PCBs or products containing PCBs may not be sold to the public or to light industry. Heavy industrial use is subject to prior authorization.

1.5 U.S. Customs Regulations

Pursuant to Customs Bureau Directive CIE 36-72, July 4, 1975, the field offices of the Customs Bureau have been specifically monitoring the inflow of PCBs and this information is forwarded to EPA. The information is not public.

BIBLIOGRAPHY

1. Bauman, R.D., EPA's Pollutant Strategies Branch, Polychlorinated Biphenyls. Private Communication to Mr. Lindsey, A.W.; Office of Solid Waste Management Program, November 20, 1973.

2. Coleman, J.H., Acting Director Duty Assessment Division, Polychlorinated Biphenyls. Private Communication to Mr. Barden, J.D., Versar Inc., October 15, 1976.

3. Environment Directorate, Organization for Economic Cooperative and Development, "Polychlorinated Biphenyls, Their Use and Control", Paris, 1973.

4. Op. Cit., September 11, 1976.

5. Op. Cit., February 7, 1975.

6. Environmental Regulation Handbook EIC-Environment Information Center, Inc., New York, New York.

7. Polychlorinated Biphenyls and The Environment, Interdepartmental Task Force on PCBs, Washington, D. C., May (1972).

8. Steigerwald, B.J., Director, EPA's Office at Air Quality Planning and Standards, "Air Transport of Polychlorinated Biphenyls (PCBs)". Private Communication to Mr. Strelow, R., Assistant Administrator for Air and Water Management, September 29, 1975.

9. Stottlenyer, J.N., Department of Transportation, "Transportation Regulations for Toxic Substances". Private Communication with Contos, G., Versar Inc., September 10, 1975.

APPENDIX A

PCB ADSORPTION TESTING BY XAD-4 RESIN

Experiments and Results

The apparatus and materials used by Rohm and Haas were:

- Two glass columns - 1/2 inch in diameter
  - Adsorbent volume - 50 ml in each column
  - Adsorbent bed height
    - XAD-4 Amberlite polymeric adsorbent - 16.5 inches
    - Activated carbon (Filtrasorb 300) - 15 inches
  - PCB material used - Aroclor 1254 (manufactured by Monsanto)

A feed solution representing a PCB contaminated waste stream was prepared containing approximately 160 ppb of PCB. Because Aroclor 1254 is very viscous, it was solubilized in methanol prior to dispersion in water. Methanol increases the solubility of PCBs in water. In order to maintain a constant flow throughout the experimental run, two batches of feed solution had to be prepared. The composition of each solution is presented in Table A-1.

Table A-1

Composition of Feed Solutions

Feed Solution A - 13.25 liters

0.0022 gm of PCB or 166 ppb
2 ml of methanol or 119 ppm

Feed Solution B - 13.25 liters

0.0029 gm of PCB or 218 ppb
2 ml of methanol or 119 ppm

The influent solution was passed simultaneously through the column of Amberlite polymeric adsorbent and the column of activated carbon at a flow rate of 2 bed-volumes per hour (0.25 gpm/ft^3 resin). Samples were collected from each column daily, so that each sample nominally represented 48 bed volumes of

effluent. Liquid passed through both columns for five days, or until 240 bed volumes of effluent (12 liter total volume) were collected from each column.

Prior to analysis, the PCB in each effluent sample was extracted into a volume of hexane equal to one-tenth the volume of the original sample. The influent material, which was sampled four times during the run, was likewise extracted into the same proportion of hexane. This single stage extraction removed more than 95 percent of the PCBs present in the aqueous samples. The extracted effluent samples were then evaporated to 5 mls, further concentrating the PCBs present. These evaporated samples were then sent to Versar Inc., for analysis. The results are given in Table A-2.

Table A-2

Reductions of PCB (Aroclor 1254) Concentrations Through Use Of Amberlite Polymeric Adsorbents and Activated Carbon

Day	Nominal Throughput (BV)	Influent Concentration (ppb)	Effluent Concentration (ppb) Amberlite Adsorbent	Carbon
1	1-48	25 (Feed A)	0.246	0.050
2	49-96	none detected	0.031	0.055
3	97-144	21.1 (Feed B)	0.023	0.025
4	145-192	0.69	none detected	none detected
5	193-240	0.69	3.478	0.045

A significant amount of PCB was adsorbed onto the walls of the influent container, as can be seen with Feed A, which originally was prepared with 166 ppb of PCBs. This loss by adsorption on equipment surfaces also has been detected in other tests, and must be taken into account.

Both the Amberlite polymeric adsorbent and the activated carbon reduced the concentration of PCBs in water to less than 0.05 ppb. The higher concentration of PCBs for the first day's passage of effluent through the resin beds could be due to an incomplete conditioning of the beds, resulting in some material leaching out of the resin. The high concentration of PCBs in the last sample from the polymeric adsorbent must be viewed with some suspicion,

particularly since it indicates an effluent having a concentration higher than that in the influent.

Amberlite polymeric adsorbents can usually be solvent regenerated, because the energy of adsorption is much lower for resins than it is for carbon. Hence, adsorbed solute can be removed simply by passing an appropriate solvent through the resin. Work performed by Musty and Nickles (J. Chromat., 89:185 (1974)) with PCBs and a solution of 10 percent diethyl ether in hexane as a regenerant indicates that 76 percent of the PCBs adsorbed on an Amberlite polymeric adsorbent can be recovered using this mixed solvent. In addition, Rohm and Haas have found that simple alcohols or ketones are effective solvents for these resins. Undoubtedly, a more efficient solvent could be found that would quantitatively remove PCBs from polymeric adsorbents.

Activated carbon, which has a much higher energy of adsorption than do these resins, requires a more energy intensive process of regeneration, such as thermal rejuvenation.

The ability to solvent regenerate Amberlite polymeric adsorbents in situ would provide the advantage of generating only the more-readily-handled-by incineration liquid phase PCBs wastes.

APPENDIX B

MACRORETICULAR RESINS FROM ROHM AND HAAS CO.

Description

Ion exchange resins have the capacity to selectively recover ionic constituents, both inorganic and organic, from water through an ion exchange mechanism. Organic compounds are often exchanged or adsorbed irreversibly onto an ion exchange resin. This may cause a decrease in capacity so that the operating life of the resin is diminished. The more recently developed macroreticular type of ion exchange resins are polymeric adsorbents used specifically for adsorbing aromatic and aliphatic compounds from water.

Structures

The macroreticular structures are characterized by having unusually large surface areas as compared with those of conventional gel structures.

Using the newer macroreticular polymerization technique, it is possible to widely vary the particle pore size, pore size distribution, and surface area. Polymers with very small pores (5 nm or less) and high surface areas (in the range of 800 square meters per gram) can be prepared. At the other end of the spectrum, pore sizes on the order of 30 micrometers, visible under modest magnification, are possible.

The macroreticular polymerization technique is applicable to a wide variety of monomers. It is possible to introduce functional groups onto the surface of the preformed macroreticular polymers. Thus, a great range of surface types is possible, limited only by the availability of monomers or the applicability of reactions to introduce functionality. The full line of macroreticular adsorbents constitutes a spectrum of surfaces from the least polar to the most polar. For PCBs removal, the nonpolar and intermediate polarity adsorbents should be used. The chemical structure of Amberlite XAD-2 and Amberlite XAD-4 (see Figure B-1) is representative of the nonpolar adsorbent series. Figure B-2 shows the acrylic-ester composition of Amberlite XAD-7 and Amberlite XAD-8, the intermediate polarity adsorbents. The physical properties of these Amberlite XAD adsorbents are summarized in Table B-1

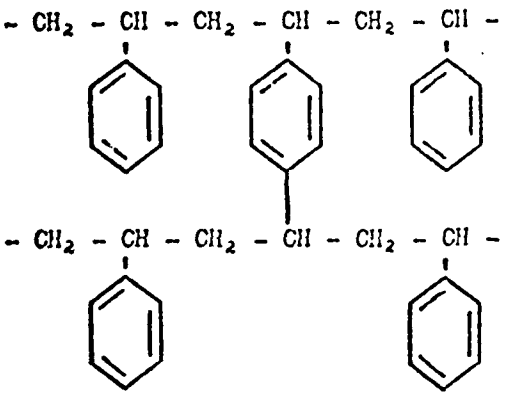

Structure of Amberlite XAD-2 and Amberlite XAD-4

Figure B-1

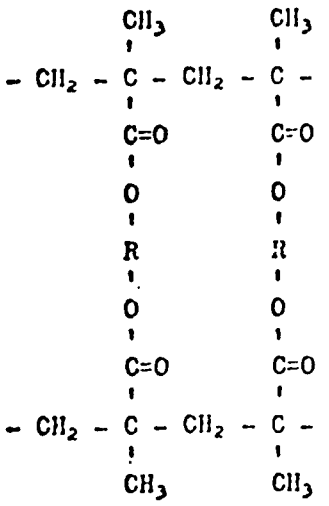

Structure of Amberlite XAD-7

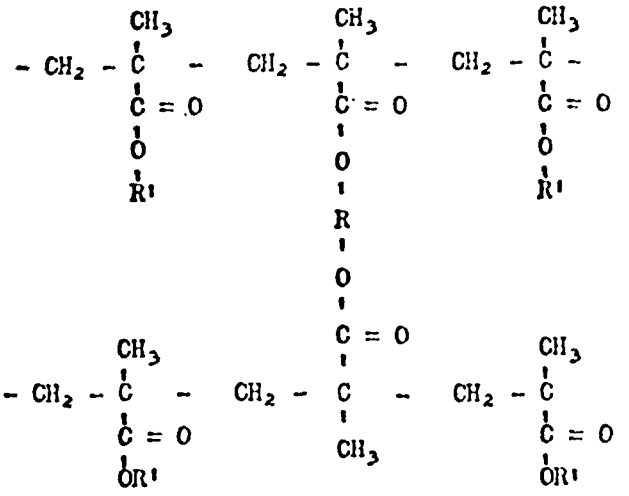

Structure of Amberlite XAD-8

Figure B-2

Table B-1

Typical Properties Of Amberlite Polymeric Adsorbents

	Chemical Nature	Helium Porosity		Surface Area	Average Pore Dia.	Skelatal Density	Nominal Mesh Sizes
		Volume %	cc/gram	m^2/gram	Angstroms	grams/cc	
Nonpolar							
XAD-1	Polystyrene	37	0.69	100	200	1.06	20 to 50
XAD-2	Polystyrene	42	0.69	330	90	1.08	20 to 50
XAD-4	Polystyrene	51	0.99	750	50	1.09	20 to 50
Intermediate Polarity							
XAD-7	Acrylic Ester	55	1.08	450	80	1.25	20 to 50
XAD-8	Acrylic Ester	52	0.82	140	250	1.26	25 to 50

Macroreticular Adsorption Phenomena

An important aspect of the Amberlite adsorbents is the nature of the different surfaces. The phenomenon of adsorption on solids involves van der Waals' forces which bind the adsorbate on to the solid surface. Many types of interactions, such as hydrophobic bonding, dipole-dipole interaction and hydrogen bonding, are important. It is not possible to predict accurately which materials will be adsorbed well by a given adsorbent; however, from a practical point of view, a useful concept is that hydrophobic or nonpolar molecules or portions of such molecules are attracted to hydrophobic surfaces, while hydrophilic or polar materials are attracted to hydrophilic or polar surfaces. Examples of these interactions are presented in Figure B-3. If each organic molecule is thought of as having both a hydrophobic and a hydrophilic end, then the hydrophobic end will be attracted to hydrophobic adsorbents such as Amberlite XAD-2 and Amberlite XAD-4, while the hydrophilic end will be attracted to hydrophilic adsorbents. This type of reaction is particularly true when the adsorption takes place from aqueous solution.

For PCBs, it would be expected that the biphenyl portion would be typically aromatic and hydrophobic, and thus attracted to an aromatic resin. Increasing the chlorination of a biphenyl would reduce its water solubility and thus reduce what little polar character the PCB might have. Thus, the PCB would not have a "polar end" and would be strongly repelled by the water phase and strongly attracted by the resin.

A recent study by James Fritz, et al, of Iowa State University, reported a macroreticular resin method for extracting trace organic contaminants from water. He also demonstrated the feasibility of selective desorption of these contaminants, using appropriate eluants, so that the contaminants could be identified. He also established the performance or retention efficiency of the resin in isolating these compounds. A summary of these results is given here:

SORPTION ON AROMATIC SORBENTS FROM POLAR SOLUTIONS

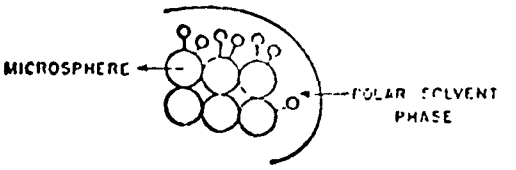

SORPTION ON ALIPHATIC SORBENTS FROM POLAR SOLUTIONS

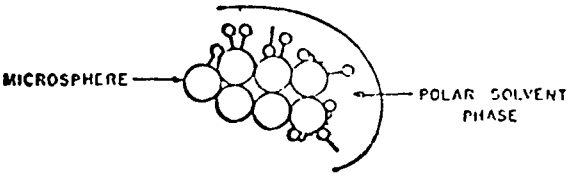

SORPTION ON ALIPHATIC SORBENTS FROM NON-POLAR SOLVENTS

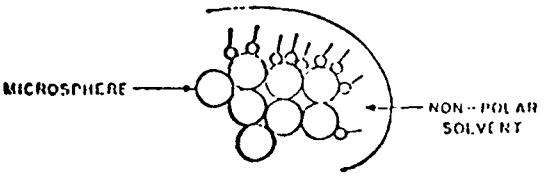

Figure B-3

Adsorbent: Amberlite XAD-2 unless otherwise indicated

Particle Size: 100 to 150 mesh

Flow Rate: 10 BV/hr. (1.25 gpm/ft^3 of adsorbent)

Test Compounds	Influent	Effluent	Retention Efficiency %
Benzene	100	0	100
Benzene sulfonic acid	3.0	2.1	31
Phenol	0.4	0.22	45
Phenol (Amberlite XAD-7)	0.4	0.06	86
Aniline (Amberlite XAD-7)	4.0	0	100
Naphthalene	0.05	0	100

It can be seen that Amberlite XAD-2 and Amberlite XAD-7 were 100 percent efficient in recovering the nonionic organic compounds. These results predict good success with PCB adsorption. On the other hand, ionic solutes as well as strongly ionized compounds, such as benzene sulfonic acids and p-toluene sulfonic acids, were not retained with the same high efficiency. It was noted that retention efficiency of a contaminant increases with increasing molecular weight in a homologous series, indicating that the higher chlorinated PCBs would be the best adsorbed.

APPENDIX C

NON-CARBON ADSORBTION AND OTHER RESEARCH STAGE PCB TREATMENT TECHNOLOGIES

1.0 POLYVINYL CHLORIDE (PVC) AND POLYURETHANE FOAMS

John Lawrence and co-workers of Environment Canada have reported preliminary tests using PVC, polyurethane foams, carbon, and the XAD resins for removal of PCBs from both synthetic wastewater solutions and actual raw sewage.

H. D. Gesser (in Analytical Letters 12:883 (1971)), reported that a polyurethane foam column quantitatively adsorbed PCBs from water. Lawrence found that carbons, polyurethane foams and XAD-2 strongly adsorbed PCBs from aqueous solutions, but were much less effective with raw sewage. He found that PVC, however, was very effective in removing PCBs from raw sewage.

Dr. Lawrence is the only investigator known to have worked with PVC for adsorbing PCBs. Following is a summary of his test procedures and results.

1.1 Experimental Method for PCBs Adsorption Tests, by Environment Canada

Two stock solutions of Aroclor 1242 and 1254 were prepared by vigorously mixing an excess of each Aroclor with water for 8 hours, allowing the solutions to stand overnight and carefully decanting off the true aqueous phase. The water used was double distilled, the second distillation being from an all-glass system. The concentration of these solutions, determined by gas chromatography, was 45 ± 10 ppb, which is consistent with the published solubility for Aroclor 1254 of 56 ppb.

All solvents used were glass distilled pesticide grade (Caledon Laboratories, Inc.). The activated carbons employed were lignite-based hydrodarco 400 (ICI-United States) and anthracite-based Filtrasorb 400 (Calgon Corporation). These were pretreated by heating to 300°C for 12 hours, cooling, and twice extracting each 500 gm with 2 liters of hexane. The extracted carbon was then filtered and air dried. The polyurethane foams used were DiSPo plugs (Canlab Supplies Ltd.) and Foams 1115 and 2328 (B.F. Goodrich Ltd.). (The first

two digits in the Goodrich products relate to the density, i.e., 1.1 and 2.3 lb/ft^3 and the second two digits to the hardness). The foams were shredded and successively washed with n-hexane (several times), acetone and distilled water. They were then air dried. This pretreatment was developed to remove trace organic contaminants from the surface of the foams. The macroreticular polystyrene resins Amberlite XAD-2 and XAD-4 (Rohm and Haas Company) were pretreated by successively washing each 500 gm of resin with 1-liter batches of water, methanol, and water. The cleaned resins were stored in sealed glass containers under methanol to prevent them from drying. Polyvinyl chloride chips (Monsanto Company) were washed several times with n-hexane and air dried.

To determine the adsorption characteristics, 100-ml aliquots of stock Aroclor solutions were stirred rapidly for 30 minutes with weighed amounts of adsorbent and then the adsorbent was removed by filtration through a Millipore prefilter pad. Five milliliters of n-hexane were then vigorously stirred with the filtrate for 45 minutes and the organic extract withdrawn. These extracts were analyzed with a gas chromatograph (Varian series) equipped with an electron capture detector (Ni^{63}). The gas column (1.8m x 1.5 mm i.d.) was packed with 4 percent OV-101 and 6 percent OV-210 on Chromosorb W HP $^{80}/_{100}$ mesh. Nitrogen was used as a carrier gas at 50 ml/min. The injection port, column and detector temperatures were 250°C, 200°C, and 300°C, respectively. Extraction and analysis of water samples spiked with known amounts of Aroclor indicated that greater than 98 percent of the PCBs were detected by this method.

Wastewater was collected from the Hamilton Sewage Treatment plant at the raw sewage inlet pipe. Sampling was carried out using all-glass containers to insure against adsorption of PCBs onto container walls. The samples were stored at a constant temperature of 3°C and in all cases were treated and/or extracted within 24 hours of collection. In the evaluation of PCB adsorption from sewage, the procedure described above for pure Aroclor solutions was followed, except that 100-ml samples of raw sewage were stirred vigorously with the adsorbent for 1 hour, and then the adsorbent was separated by filtration through a 60 mesh, stainless-steel screen. After washing, the screen did not retain any raw sewage and, with the exception of activated carbon, 100 percent

separation of adsorbent was achieved. The filtrates were then twice extracted with 50 ml of n-hexane in 500-ml separatory funnels. The aqueous portion was discharged and the organic phase, after being dried through 15 g of Na_2SO_4, was reduced in a rotary evaporator to approximately 3 ml. The sample was purified by liquid-solid chromatography on a florisil support column using petroleum ether to elute the PCB fraction and then the eluate was evaporated to 3 ml. Prior to injecting the sample into the gas chromatograph, it was shaken with 0.2 ml of mercury to remove residual sulfur compounds.

The PCBs in the samples were identified by comparison of their chromatograms with chromatograms of standard Aroclors. The total concentrations of PCB in raw sewage usually averaged 9.8 ± 4 ppb.

1.2 Experimental Results of PCBs Adsorption from Sewage and Synthetic Wastewater

Adsorption data for Aroclor 1254 and 1242 on PVC, activated lignite carbon, anthracite carbon, two polyurethane foams, and Amberlite XAD-2 and XAD-4 resins are shown in log-log form in Figure C-1. The weight of PCB adsorbed per unit weight of adsorbent is expressed as a function of the equilibrium concentration of PCB remaining in solution. The sets of data do not follow any of the common isotherm expressions (e.g., Langmuir, Freundlich, BET), and consequently a theoretical interpretation of the results has not been attempted. It is evident that the two carbons and XAD-2 have the greatest adsorptive capacities; however, a residual concentration of less than 3 ppb could not be obtained with lignite carbon. Both polyurethane foams appear to be good adsorbers, with relatively high adsorptive capacities and low residual levels. DiSPo polyurethane foam plugs are also evaluated but these have identical adsorptive properties to the Goodrich Foam 1115. The lower efficiency of XAD-4 is surprising in view of the similarity between it and XAD-2 (they differ only in pore diameters: 9 nm for XAD-2 and 5 nm for XAD-4). The lower efficiency of PVC, which has no macroreticular structure, can be explained by its lower surface area. The surface area per unit weight is reported as 500 to 2000 m^2/gm for carbon, 750 m^2/gm for XAD-4, and 330 m^2/gm for XAD-2, but only 2×10^{-3} m^2/gm for PVC chips - there being no macroreticular structure in PVC. This gives an area ratio for XAD-2/PVC of approximately 10^5.

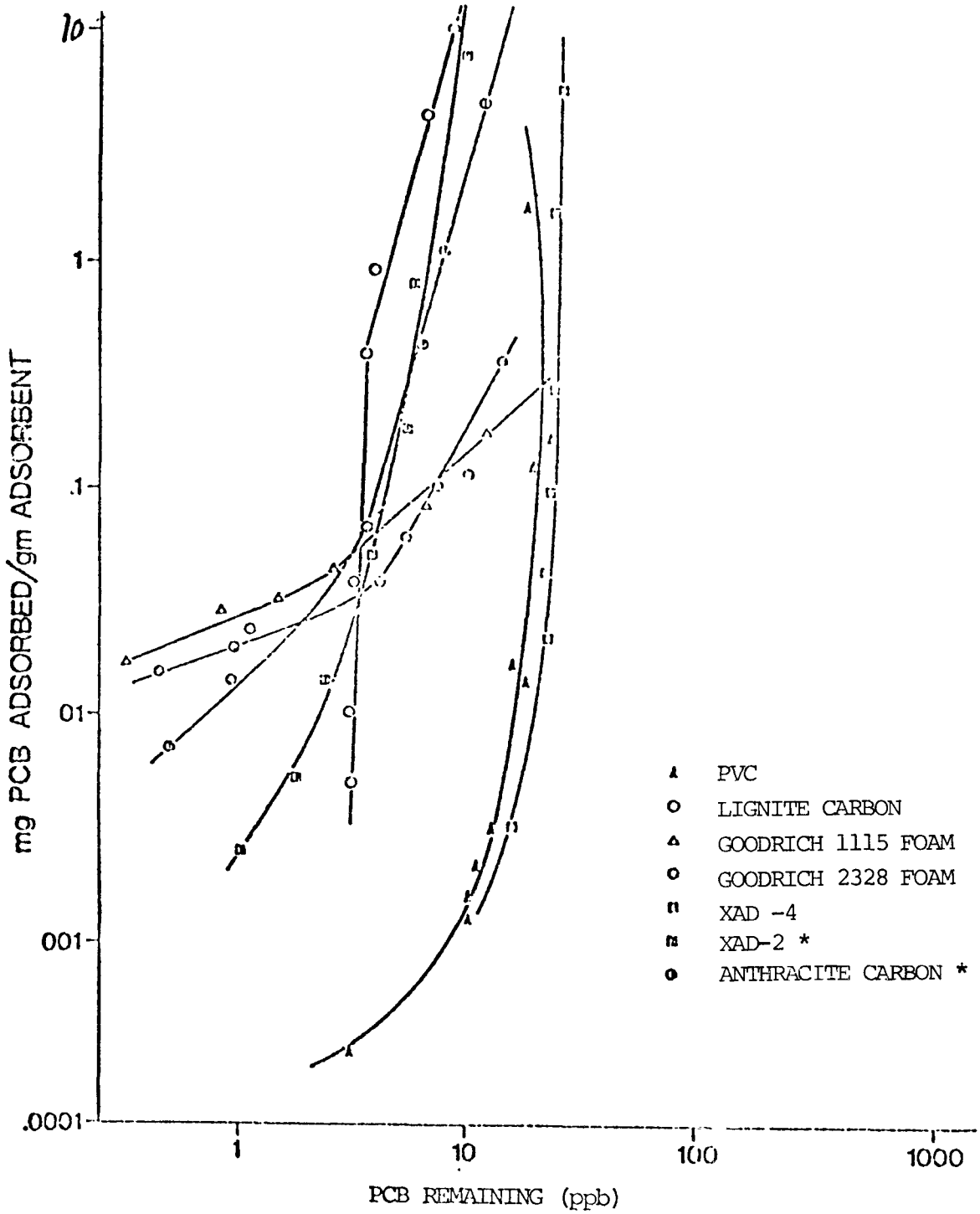

Figure C-1. Adsorption of Aroclor 1254 on P.V.C., Lignite Carbon, Anthracite Carbon, Polyurethane Foams and Amberlite XAD-2 and XAD-4.

* Indicates adsorption of Aroclor 1242 rather than 1254

There are two complicating conditions associated with adsorbing PCBs from raw sewage rather than from synthetic aqueous solution: (a) sewage contains other hydrophobic organic matter which competes for the active sites on the adsorbent, and (b) much of the PCB has already adsorbed onto the suspended solids by the time the sewage reaches the treatment plant. Condition (b) can be demonstrated easily by filtering raw sewage and monitoring the change in PCB concentration. With typical raw sewage containing 10 ppb PCB, vacuum filtration through a Millipore prefilter pad results in the removal of about 75 percent of the PCBs. It is therefore necessary to find an adsorbent which is not only relatively specific to PCBs, but which also has sufficient affinity for the PCBs to reverse the PCB-suspended-solid equilibrium.

Table C-1 shows the percentage of PCB (including both Aroclor 1254 and 1260) adsorbed from raw sewage by five different media. With the exception of the PVC, approximately 1 gm of each media was stirred with 200 ml of raw sewage for 45 minutes; approximately 10 gm of PVC were used to compensate for its lower surface area. To minimize the inconsistency of raw sewage, the data have been averaged over several determinations on different days and with different sewage samples. The data indicate that PVC and XAD-4 are more effective than carbon or polyurethane foams in terms of percentage of PCB removed from raw sewage. This is surprising since the graphs for PCB adsorption for pure Aroclor solutions (Figure C-1) predict the opposite. Lawrence believes the reasons for this apparent anomaly are: (a) the active sites on carbon are preferentially occupied by hydrophobic species other than PCBs in the sewage, and (b) suspended solids adhere to the surface of carbon and foam acting as a barrier to further adsorption. These results indicate that PVC is superior to the other media for removing PCBs from sewage.

Lawrence's work is continuing, with studies of methods of scale-up and continuous or multistage operations with PVC. Optimum retention time, and methods for continuous addition of fresh PVC and removal of spent PVC are under study.

The strong competition between organic solids and non-organic media is emphasized further in the following discussion.

Table C-1. Adsorption of PCBs from Raw Sewage

ADSORBENT	% PCB ADSORBED*
Lignite Carbon	46
Polyurethane Foam	35
Amberlite XAD-2	23
Amberlite XAD-4	60
PVC	73

* Includes both Aroclors 1254 and 1260. Data are averaged over several determinations to minimize the variations in raw sewage.

1.3 PCBs Adsorption on Clays and Organics in the Soil

E. S. Tucker and co-workers at Monsanto reported on studies of migration of PCBs (Aroclor 1016) through various soils as induced by percolating water (Bulletin of Environmental Contamination and Toxicology 13 (1):86 (1975)). The results were to be used for estimating PCBs leached from landfills. Their tests first led them to believe that the higher the clay content of a soil, the better its retention of PCBs.

The experimental procedure employed consisted of percolating water through a column packed with soil coated with Aroclor 1016 and then monitoring the effluent water for PCBs. The soil columns employed were approximately 3 inches in diameter by 12 inches high, and were dry packed in layers. Each soil layer was 3 inches thick, with the first layer being uncoated soil, followed by a layer coated with 2.5 percent (w/w) of Aroclor 1016, and then another layer of uncoated soil. An acetone solution of Aroclor 1016 was used to coat the air-dried soil, followed by removal of the acetone in a rotary evaporator.

Three different types of soils were used in this study. The characteristics of each are shown in Table C-2. The intent was to simulate the various soil types which could be encountered at different landfill sites. The soil types and the procedure employed have been used previously to evaluate the soil mobility of agricultural chemicals.

Distilled water was fed from a reservoir at a constant pressure to each soil column. The effluent flow rates were observed to increase the first few days, then decrease, and finally level out. Apparently, after the wetting phase some channeling occurs until the soil becomes compressed in the column. This effect was most pronounced with the silty soils. The average flow rates for Norfolk Sandy Loam, Ray Silty Loam and Drummer Silty Clay Loam were 0.26, 0.53 and 0.32 liters per day, respectively. The effluents then were quantitatively adsorbed on polyurethane columns, then extracted and analyzed by electron capture gas chromatography.

Table C-2

COMPOSITION OF SOILS USED IN THE MONSANTO STUDY

Soil	Norfolk Sandy Loam	Ray Silty Loam	Drummer Silty Clay Loam
% Sand	82.5	6.2	2.8
% Silt	11.0	83.2	55.4
% Clay	5.5	9.6	35.8
% Organic Carbon	1.0	1.0	6.0

1.3.1 PCBs Adsorption Results

PCBs adsorption results are given in Table C-3. These results indicate that clay was a strong adsorbent for PCBs. This would be in agreement with the work of R. Hague and co-workers (Environmental Science Technology, 8:139 (1974), in which clay was found to have a high affinity for PCBs. However, in later work with pure clays, the retention was found not to be as good as expected. Attention was then directed to the organic portion of the soils, and Tucker, et al, have tentatively decided that the organic fraction is more important to the adsorption of PCBs; it can be seen from the data that the high-clay-content soil was also the high-organic-content soil.

Further investigation of some clays might be warranted. S. Pearson of Hercules, Inc., in a personal communication, stated that bentonite clay was very effective in removing other pesticide wastes from water. The finely divided clay was then rapidly removed from the water with "Hercofloc".

1.4 Spahgnum Peat (Lignin-Cellulose) as an Adsorbent

The above work by Tucker, and the general finding that in sewage sludge the solid phase contains many times the amount of PCBs the water phase contains, leads to the conclusion that natural organic materials from the earth might make good adsorbents for PCBs.

Although it has not yet been tested for removing PCBs, there is a commercial method of continuous wastewater treatment, called the Hussong/Couplan Water Treatment System, that uses sphagnum peat. The peat is formed into a continuous mat on a mesh belt through which wastewater is sprayed. The system has shown high effectiveness in removing certain organics and metals from wastewaters.

Capital costs for this system average about 60¢ per gallon of daily capacity. Operating costs, when treating a dye house effluent, were 7¢ to 14¢ per 1000 gallons.

2.0 CATALYTIC REDUCTION

In the literature review, two approaches were found for modifying the chemical structure of PCBs in order to aid in waste control. One approach was the

Table C-3

PCBs FOUND IN PERCOLATING WATER

Norfolk Sandy Loam		Ray Silty Loam		Drummer Silty Clay Loam	
Total Effluent Volume (ℓ)	ppb PCBs	Total Effluent Volume (ℓ)	ppb PCBs	Total Effluent Volume (ℓ)	ppb PCBs
1.3-8.1	ND	2.7-16.4	ND	1.6-9.9	ND
10.1	ND	20.7	65	12.5	ND
13.5	23	27.6	92	16.6	ND
25.5	63	51.9	153	31.4	ND
48.1	63	98.1	136	59.2	ND

ND = None detected, < 1 ppb

complete chlorination of PCBs, to give decachlorobiphenyl, the rationale being that the completely chlorinated biphenyl would have the least solubility in water of any PCB, and thus would be much easier to adsorb and remove. However, decachlorobiphenyls are also the most refractory PCBs.

A better approach is the dechlorination of PCBs to give biphenyl or bicyclohexyl. Berg, et al (in the Bulletin of Environmental Contamination Toxicology 7:338 (1972) state that PCBs can be dechlorinated quantitatively with hydrogen over platinum or palladium catalysts to give bicyclohexyl.

T. Sawai of Japan (in Genshiryohu Kogyo 18(12):43-7 (1972)) reported the degradation of PCBs using the cobalt 60 isotope. Gamma irradiation at a level of 10^{18} ev/gram produced chain dechlorination in an alkaline propanol solution saturated with nitrogen. Alkaline concentrations of 0.01 molar gave about 40 times the dechlorination that a neutral solution gave.

A process of reductive dechlorination, more amenable to low-cost operation and commercial scaleup, is being developed by Sweeny, Saltonstall and co-workers at Envirogenics Systems Co. of El Monte, California.

2.1 Reductive Dechlorination of PCBs at Envirogenics Systems Corp.

Envirogenics, originally working in chlorinated pesticides, has developed catalyzed reduction process methods for the following compounds:

DDT	aldrin	Aroclor 1221
DDD	Chlordane	Aroclor 1242
Kelthane	dieldrin	Aroclor 1254
Perthane	endrin	Aroclor 1232
Methoxychlor	heptachlor	Aroclor 1248
Lindane	toxaphene	Aroclor 1260

The reductive dechlorination reaction has been run at ambient temperature and pressure, by flowing the liquid chlorinated hydrocarbon through a column containing metallic iron granules coated with a metallic copper and blended with sand. The copper exerts a catalytic action. pH is maintained at nearly neutral, since with low pH, say 2.0, the iron conversion rate to ferrous chloride increases 10 times, but the dechlorination reaction is not much faster. The chlorinated hydrocarbon is converted to a hydrocarbon. PCBs, in this process, seem to lose chlorines stepwise, leaving unidentified PCB homologs.

Envirogenics is now under EPA contract (68-03-2364) to develop and demonstrate an effective bench-scale (1-3 gpm) low-cost process for the treatment of dilute (ppb to 1 ppm) aqueous manufacturing and processing wastes containing PCBs. Specific objectives and guidelines include:

1. Reduction of PCBs to 5 ppb or less, with levels of < 1 ppb desirable
2. Sufficiently low projected treatment cost to be economically attractive
3. Low expected toxicity of all effluent products, including both degraded PCBs and any added reagents
4. Use of readily available materials, both in construction and as reagents

The process entails simply pumping the liquid to be treated through the catalytic column. Process characteristics that might be proposed for the scaled-up PCB operation, based on what has been learned about the other pesticides thus far, are:

catalyst: 100-mesh metallic iron granules coated with 0.1 milliequivalents of copper per gram of iron

support: 60 to 100 mesh (approx.) sand

number of beds: 4, operable in series or parallel

bed composition: 500 pounds of iron catalyst, plus 3500 pounds of sand

flow rates: 2 to 10 gpm /ft^2

pressure drop: about 10 psi

pH: kept neutral, through caustic addition

piping: 304 ss, with teflon tape seals

tanks: Steel with epoxy coating inside

pretreatment: Wastes are assumed to be free of undissolved solids and oils and are fabric filtered before entering process

The expectations for wastewater PCB reductions with such a pilot plant are based on small 1- to 2-inch-diameter column lab tests that gave reductions of PCBs from 50 ppb to less than 0.1 ppb.

The capital cost of the equipment to process 100 gpm is estimated at $65,000, plus tank storage and construction costs. Operating costs, including amortization of capital, is estimated at 72¢ per 1000 gallons of effluent.

3.0 CATALYTIC OXIDATION AND MISCELLANEOUS REACTIONS

The catalytic oxidation of PCBs includes oxidation by: air, oxygen, ozone, hydrogen peroxide and chlorine dioxide. The reaction is usually assisted by catalysts or reaction sensitizers.

PCBs are very resistant to chemical attack. Monsanto states that they are not affected by boiling sodium hydroxide, or by long contact, say 10 days, with concentrated sulfuric acid at ambient temperature. There is no apparent reaction in a bomb of oxygen at 250 psi and 140°C.

3.1 Strong Acids

Russian workers have reported nitric acid decomposition of PCBs. They used nitric acid at a specific gravity of 1.4, and refluxed two PCBs, a pentachloro and a heptachloro homolog, for periods ranging up to 100 hours. They found di- and trichlorobenzoic acids from the former, and tri- and tetra chlorobenzoic acids from the latter. Less concentrated nitric acid would not oxidize these compounds, nor would potassium permanganate or chromic acid. However, mono-, di- and trichlorobiphenyls can be oxidized to the corresponding chlorobenzoic acids with chromic anhydride and acetic acid. The less rigorous conditions can also produce a large mixture of nitrated chlorobiphenyls.

3.2 Electrochemical Oxidation

Notwithstanding these examples of oxidative resistance, J. D. Stuart and co-workers at the Dept. of Chemistry of University of Connecticut have conducted laboratory electrochemical oxidations of PCBs at ambient temperature and pressure. They oxidized PCBs having one to ten chlorine atoms, using very high anodic potentials in a dry methylcyanide solvent. They hypothesize a series of reactions starting with hydrolysis from traces of water present and ending with oxidation.

A number of other catalytic oxidation investigations of refractory organics are being conducted in the U.S., with some being sponsored by EPA. Although PCBs have yet to be tested in these investigations, the methods have sufficient power and flexibility to indicate PCBs could be destroyed. In addition, these methods have the potential for zero discharge of pollutants since they have converted refractory organics to CO_2 and water.

3.3 Catalytic Ozonation and Ultrasound Decomposition of Organics

Gerard Smith and J. W. Chen of Southern Illinois University have presented results (68th annual AIChE Meeting in November, 1975) of catalytic ozonations of non-PCB organics in aqueous systems. They have tested catalysis with oxygen, and ozonation without catalyst, and neither method had the effectiveness of catalytic ozonation. An Fe_2O_3 catalyst was used, and phenol and ethyl acetoacetate were used as model compounds in water. The liquid retention time in their flow reactor system was 25 minutes, and the gas flow (using 30 mg/liter concentration of ozone) was 0.1 liter per minute. Under these conditions, TOC was decreased 95 percent for an initial TOC of 100 mg/l, and 85 percent for an initial TOC of 400 mg/l. The packed reactor had the aqueous solution flowing down, and the ozone flowing up.

In experiments comparing the effectiveness against refractory organics of ozone plus Raney nickel and ozone plus ultrasound, Smith found that the reactions were similar. Also, he found that ultrasound and oxygen gave similar reactions. Ultrasound was applied at 800 KHz, and 4 to 5 watts per cm^2. It appeared, however, that these effects were not additive; for example, adding ultrasound to an ozone catalytic reaction did not materially change the reactivity of the ozone and catalyst alone. He also found that at these ambient temperatures and pressures, phenol disappeared rapidly, but other organics, including oxygenated aromatics, resulted rather than compounds expected from rupture of the aromatic ring.

3.4 Wet Catalytic Oxidation of PCBs

L. W. Ross at Denver Research Institute has studied the wet catalytic oxidation of strong wastewaters having COD values of 3,000 to 15,000. Tests

showed that reacting $Fe_2(SO_4)_3$, $CuSO_4$, and H_2O_2 at a pH of 5.0, and Fenton catalyst at a pH of 2.5 reduced COD concentrations by 95.4 and 96.0 percent respectively after 2 hours at 400°F. Platinum oxide as a solid catalyst also gave good results. Most of the organics were cellubiosics.

3.5 Wet Catalytic Oxidation and Catalyst Durability

J. F. Katzer and co-workers at University of Delaware have been studying elevated pressure and temperature catalytic air-oxidation of refractory organics. They are currently being supported by EPA in a study of the durability of catalysts in wastewater environments. In a paper soon to be published in the Journal of the Water Pollution Control Federation, Katzer reports on studies of the complete oxidation of phenol to CO_2 and water in an aqueous medium using a supported copper oxide catalyst. Rapid degradation rates were found, and the rate data were used to run preliminary design and costs for commercial-scale waste treatment plants. His conclusion is that catalytic oxidation of wastewaters is cost competitive with other physical chemical treatment techniques.

Katzer found that pressures of 10 to 20 atmospheres, and temperatures of 100 to 200°C, were required to get adequate reaction rates yielding up to 99 percent conversion of organics to CO_2 and water. It was found that ambient temperature and pressure generally caused more adsorption on a variety of catalysts than did any reaction.

3.6 Dye-Sensitized Visible Light Photo-Oxidation of Organics

R. L. Sanks and co-workers at the Civil Engineering Dept. of Montana State University are working on the dye-sensitized, aerobic, photo-oxidation of refractory organics. They were able to rapidly break apart the benzene ring of cresol using such dyes as methylene blue and bengal rose. The key to the process is that in the presence of sunlight and air, methylene blue can produce singlet oxygen from the O_2 in air. There are two forms of this singlet oxygen, with a half life of only a millisecond, but with the ability to easily shatter benzene rings. Sanks visualizes a process whereby a lagoon containing wastewater with refractory organics, could have the dye molecules attached to a long chain alkyl

or a floc of some kind to keep them at the surface. The sun would provide the photolysis, and little dye would be consumed as it is a catalyst in the reaction. Such a process, if it can be developed, suggests a route to a very low-cost method of obtaining zero discharge, and water recycle systems.

3.7 Chlorine Dioxide Oxidation

International Dioxide, Inc., of New York City is offering a stabilized chlorine dioxide, which is being used by municipalities for taste and odor control of water. It is used as an adjunct to chlorination and can decompose chloramines. It oxidizes and destroys phenol and does not chlorinate. Unstabilized ClO_2 is a dangerous explosive, thus stabilization offers a very powerful oxidizing agent for potential degradation of organics.

4.0 DESTRUCTION OF PCBs BY MICROORGANISMS

The Chemistry of PCBs by Hutzinger reports only two pure cultures of microorganisms showing metabolic activity on individual chlorobiphenyls. One culture, *Rhizopus japonicus* only converted the mono- or dichlorobiphenyls to chlorohydroxybiphenyls or possibly multi-hydroxybiphenyls.

More promising results were obtained with two species of achromobacter, isolated from sewage effluent. Under aerobic conditions, 4-chlorobiphenyl was converted to 4-chlorobenzoic acid. The organism was apparently able to attack the nonchlorinated benzene ring. Most of these degradations take a number of hours to occur. More recently, chlorinated biphenyls up through pentachlorobiphenyl have been oxidized by achromobacter. Monsanto was able to demonstrate a significant reduction in the mono-, di, and trichlorobiphenyls of Aroclor 1242 after 72 hours of treatment with activated sludge. The higher chlorinated homologs did not seem to be affected.

The degradation of PCBs by microbial action from sludges and from pure cultures of bacteria seemed to give results similar to animal metabolism studies. The lower chlorinated species, again up through the trichloro homolog, were decomposed to phenols, catechols and related compounds.

The importance of oxidative conditions was demonstrated in tests with silage containing PCBs. After several months of storage of Aroclor 1242 with silage that had undergone fermentation reactions under anerobic conditions, no change in any of the PCBs had taken place.

The use of DDT degradation as a model for PCB degradation conditions may not be helpful. Results of a study by Johnsen (PCB Newsletter, January, 1973) showed that when di- to hexachlorobiphenyls were incubated for one month with soil and with soil containing cattle manure, no indication of PCB metabolism was found. Under these conditions, p,p' DDT degrades almost completely.

It has also been found that biphenyl itself is more easily degraded or hydroxylated than any of the chlorinated biphenyls.

5.0 REVERSE OSMOSIS AND ULTRAFILTRATION

No tests for PCBs removal by reverse osmosis or ultrafiltration were found in our literature survey. Generally, these methods have found most success in removing dissolved salts from water. However, E.I. DuPont reports, in a private communication, that they have achieved 90 percent removal (rejection) or organics in water at the 1000 to 2000 ppm level. They accomplished this through the development and use of a hollow-fiber permeator system having fibers of aromatic polyamides. The system is reported to work well on organics having molecular weights greater than 100. This would indicate probable success with the PCBs, all of which have molecular weights in the range of 200 to 400.

Based on their experimental work with wound polyamide membranes operating on chlorinated hydrocarbons in water, U.O.P.'s Fluid System Division predicts a 95 to 97 percent removal of aqueous PCBs at 50 ppb concentrations. They point out however, that the reject water stream of concentrated PCBs would contain 10 to 20 percent of the original volume of wastewater so that a certain amount of recycle would have to be built into the system to reduce the generation of concentrated wastewater. Reverse osmosis systems cannot tolerate suspended solids in the feed wastewater; under optimum conditions they can operate for six month to one year before any maintenance or cleaning is required.

W. L. Short of the Chemical Engineering Dept. of the University of Mass. reports that with ultrafiltration, 50 percent rejections of phenols and chlorinated phenols has been achieved. He believes that rejection of a given compound can be improved by attaching some of that compound, or a similar material, to the membrane to act as an electronic barrier.

APPENDIX D

MASS BALANCE MODEL FOR PCB DISTRIBUTION

1.0 INTRODUCTION AND MASS BALANCE EQUATION

In order to discover the effect of various possible regulatory efforts on the distribution of refractory organics in the general environment, an attempt has been made to determine the manner by which a specific group of such compounds, PCBs, has become so widely dispersed, to determine the dynamics of the distribution process and to determine the changes in specific distribution that may be expected to result from several regulatory alternatives. Specifically, the effect of the voluntary ban introduced by Monsanto in 1970-71 can be demonstrated.

It would be most useful to construct a mathematical representation of a suitable segment of the environment based on the existence of large quantities of valid analytical data taken over a sufficiently long time interval so as to allow the reliable extrapolation of the important time effects. Unfortunately, the necessary data are not available. The recognition that PCBs were an environmental hazard came after their prolonged and widespread use in industry. In addition, the ability to analyze environmental samples for very low levels of PCBs is also a recent development. There has been too little time since the development of these sophisticated and exceedingly sensitive analytical techniques to have allowed anything like a complete spatial and temporal study of the levels of PCBs in any given region.

In view of the serious lack of a truly adequate data base, and because of the need to have at least a first order understanding of the physical processes involved in the transport and distribution of PCBs, an attempt has been made to construct a mathematical model which should contain at least a germ of the true situation. Specifically, the model serves to indicate something of the nature of the problem, and of the types of measurements that will be required to construct a truly satisfactory model to guide future regulatory activities.

To make what follows specific, the derived model is applied to a study of Lake Michigan where a considerable body of information, of late origin, is available.

1.1 Mass Balance Model

In order to construct a mass balance model to be applied to a body of water such as Lake Michigan, it is appropriate to determine the manner in which an incremental increase in PCB content is distributed within the various processes available. In what follows, it is explicitly assumed that:

(a) There are no effective mechanisms for the degradation of PCBs which are operative over the time scale involved.

(b) The PCBs that remain in the body of water are distributed between that portion in solution in the aqueous phase, that in "solution" in the biota and that contained within the sediments.

(c) The essential loss mechanisms are evaporation from the lake surface and carry off due to the outflowing waters (in this case - through the Strait of Mackinac).

In terms of these assumptions, a differential equation can be developed that describes the time rate of change of the concentration in the various phases in terms of the input rate of PCBs. This equation may be integrated under various assumptions as to the time dependence of the input rate to yield alternate expressions for the concentration of PCB within the separate phases as a function of time.

1.1.1 Model Development

Let $B(t)$ be the rate of injection (lb/yr) of the PCBs from all sources at a reference time t [where t (years) = 0 in 1930]. Then, within the interval t to $t + \Delta t$, an incremental amount of PCBs equal to $B(t)\Delta t$ will be injected into the system. This quantity of PCBs will be partially partitioned into the various phases, with the balance removed by evaporation and/or outflow.

If Q(lbs) is taken to represent the total water mass in the Lake (assumed to be constant) and $C_w(t)$ the concentration of PCBs in the water

at time t, then

$$C_w(t + \Delta t) = C_w(t) + \frac{\Delta C_w}{\Delta t} \Delta t$$

which, in terms of the definition of concentration, causes an increase in soluted PCB of magnitude

$$\Delta m_w = Q \frac{\Delta C_w}{\Delta t} \Delta t. \qquad (1\text{-}1)$$

In a wide variety of environmental situations[1] there appears to exist a rather definite relationship between the concentration of PCBs within the sediment and/or the "average" member of the biota and that of the water in which they are immersed. These relationships are herein defined as

$$\left.\begin{aligned} \rho &\equiv \frac{C_{sed}}{C_{water}} \\ \eta &\equiv \frac{C_{biota}}{C_{water}} \end{aligned}\right\} \qquad (1\text{-}2)$$

and are assumed to be independent of C_{water} and of time.

Using the relationships expressed by Eq. (1-2), the incremental increase in the mass of PCB stored in the biota is given as

$$\Delta m_{biota} = G\eta \frac{\Delta C_w}{\Delta t} \Delta t, \qquad (1\text{-}3)$$

where it is assumed that the concentration of PCB within the biota was in equilibrium with that in the water at time t and that G(lbs), the total mass of the exposed biota, is constant over the period of interest.

Similarily, if the rate of deposition of sediments is taken to be D(lbs/m^2/yr) and the area of the lake to be A(m^2), then, assuming that the principal exchange processes between water and sediment occur within the aqueous phase during the settling out process, the incremental PCB pickup by the sediments is given as:

$$\Delta m_{sed} = AD\rho C_w(t)\Delta t \qquad (1\text{-}4)$$

[where the additional term (1/2) $\frac{\Delta C}{\Delta t}\Delta t$ is considered small, especially as $\Delta t \to o$].

If the rate of outflow from the lake (through the Strait of Mackinac) is taken as S(lbs/yr), then the loss of PCB due to this outflow may be taken as:

$$\Delta m_{outflow} = SC_w(t)\ \Delta t \tag{1-5}$$

Finally, the mass of PCB carried out of the system by evaporation is given as:

$$\Delta m_{evap} = KC_w(t)\Delta t \tag{1-6}$$

where K is the evaporation rate constant which will be discussed below.

Now, the principle of conservation of mass requires that all the injected PCB be accounted for, (note that <u>no</u> effective degradation processes are considered to be operative) from which it follows that

$$B(t)\Delta t = \Delta m_w + \Delta m_{biota} + \Delta m_{sed} + \Delta m_{outflow} + \Delta m_{evap}$$

Introducing the definitions of each of the incremental mass loads, and proceeding to the limit $\Delta t \to o$ and dropping the subscript w since the only concentration appearing is that of the PCB in water, the operative differential equation becomes

$$(Q + G\eta)\ \frac{dc}{dt} + (S + K + AD\rho)C = B(t) \tag{1-7}$$

which, for convenience in what follows, may be rewritten using the substitutions,

$$\left.\begin{aligned} Y &\equiv \frac{1}{Q + G\eta} \\ X &\equiv \frac{S + K + AD\rho}{Q + G\eta} \end{aligned}\right\} \tag{1-8}$$

$$\frac{dc}{dt} + XC = YB(t). \tag{1-8^1}$$

The general solution of Equation (1-8[1]) takes the form

$$C(t_f) = e^{-Xt_f} \int_0^{t_f} YB(t)e^{Xt}dt \qquad (1\text{-}9)$$

where $C(t_f)$ is the concentration of PCB in water at the reference time t_f (t_f = 0, 1930).

To solve Equation (1-9), it is necessary to evaluate the various constants [Equation (1-8)] and to discover an appropriate form for the driving function B(t).

2.0 PCB PRODUCTION, SALES AND ENVIRONMENTAL LOAD

In the following section, an attempt is made to evaluate the production and sales of PCBs during the period 1930-1975. Data published by Monsanto[(2)] have been presented elsewhere in this report. From the derived empirical expression for the total sales as a function of time, as well as from the empirical expressions for transformer, capacitor and other use categories, it will be possible to estimate the total environmental load of PCBs as a function of time. From this analysis, it will be possible to estimate that portion of the total environmental load that is, in fact, free and which therefore is responsible for the widespread distribution of these refractory compounds. As a final step, it will be possible to estimate the time dependence of the free (wild) PCB input to a closed system such as Lake Michigan.

2.1 Empirical Representation of PCB Sales, General and in Specific Use Categories

2.1.1 Period 1930-1970

From the Monsanto sales data for PCBs, it is possible to fit an empirical expression for each category which, to a satisfactory degree, represents the time dependence of that parameter. In each case, it is assumed that the relation is of the general form:

$$\ln Q(t) = a + n \ln t \qquad (2\text{-}1)$$

(a) Total Production

The derived empirical expression for the yearly production takes the form, for the period 1930-1970,

$$Q_{prod}(t) = 2.94 \times 10^2 t^{3.428} \text{ lbs/yr} \qquad (2\text{-}2)$$

The appropriate empirical expression for the yearly sales, for the period 1930-1970, takes the form

$$Q_{sales}(t) = 311\ t^{3.39} \text{ lbs/yr} \qquad (2\text{-}3)$$

The corresponding expressions for capacitor sales and for transformer sales are (for the period 1930-1970)

Capacitor sales: $Q_{cap}(t) = 2.03 \times 10^2\ t^{3.289}$ lbs/yr (2-4)

Transformer sales: $Q_{trans}(t) = 2.02 \times 10^3\ t^{2.37}$ lbs/yr (2-4[1])

In the above expressions, it should be noted that it is explicitly assumed that

(a) the given Monsanto data are accurate and represent the great preponderance of PCB production and sales within the U.S.

(b) the trends noted in the interval 1954-1970 are simple continuations of earlier trends, so that the curves which fit the period 1954-1970 can, in fact, be used to cover the entire interval, 1930-1970.

Information reported elsewhere in this report suggests that the second assumption above might result in low estimates for total U.S. sales; therefore, the results derived from this analysis must be considered as a lower bound on the actual situation.

In any case, numerical evaluation of expressions (2-3) and (2-4) suggest that a weighted average for the proportion of PCB sales that were employed in electrical applications is of the order of

$$\beta = 0.62 \text{ (i.e., 62\%)} \tag{2-5}$$

The remainder of the sales during the period 1930-1970 was for non-electrical applications.

2.1.2 Period 1971-1975

In 1970, Monsanto instituted a voluntary ban on the sales of PCBs restricting their use to electrical applications. As a result of this ban, the empirical relationship appropriate for sales in the post 1970 period is

$$Q'_{sales}(t) = 3.31 \times 10^7 \text{ lbs/yr} \tag{2-6}$$

In addition, during this period essentially 100 percent of PCB production was used for electrical applications; i.e.

$$\beta = 1.00 \text{ (1970-1975)} \tag{2-7}$$

To determine the total sales and total electrical system usage for the period 1930-1975, Equation (2-3) may be combined with Equation (2-6). Integration over the appropriate time frame yields

$$\sum_{1930}^{1975} Q_{sales} = \underline{\underline{9.33 \times 10^8 \text{ lbs}}}$$

and for total electrical system usage, Equations (2-4) and (2-6) with (2-7) may be combined and, on integration, yield,

$$\sum_{1930}^{1975} Q_{electrical}(t) = \underline{\underline{7.12 \times 10^8 \text{ lbs}}}$$

The balance, 2.21×10^8 lbs, were used in non-electrical applications.

2.2 Environmental Load of PCBs

2.2.1 Introduction

PCBs, or for that matter any other refractory chemical compound, may exist in the environment in two distinct states: (a) that material which is in a form such as to remain localized and thus is not actually available to enter the sensitive portion of the environment, i.e., the biota; and (b) that material which is not so constrained and is thus free to enter the sensitive portion of the environment. This latter portion of the environmental load will be referred to as "free" or "wild" PCBs. The significance of the first category lies in the fact that the containment is not of infinite life and thus material in category (a) can and will eventually become a component of category (b). For those compounds for which there exists relatively high rates of degradation within the environment, the category (a) is of somewhat lesser importance than for those refractory compounds for which the only inactivation mechanism is the entrapment with non-available forms, for example, in deep ocean sediments.

In order to estimate the rate of accumulation of PCBs in category (b), it is first necessary to determine the rate of entry of PCBs into the category (a). This will be followed by an analysis of the processes by which this total environmental load eventually becomes wild PCBs.

2.2.2 Total Environmental PCB Load, $M_{e\nu}(t)$

It is assumed that, in any time interval t to t + Δt, a fraction $\alpha < 1$ of the total sales during that interval was directly lost to the environment. It is further assumed that a fraction $\beta < 1$ of the total sales was used in the manufacture of long lived electrical components. If the average lifetime of these electrical components (time of service prior to their being discarded as obsolete) is γ_1 years, then during the time interval t to t + Δt, an amount

$$\beta\, Q_s(t-\gamma_1)\, \Delta t \qquad (2\text{-}8)$$

will enter the environment as part of category (a). In addition, the direct entry is given as

$$\alpha\ Q_s(t)\ \Delta t \tag{2-9}$$

The remaining sales $(1-\alpha-\beta)\ Q(t)$ was used in the production of relatively short-lived products, such as carbonless paper, hydraulic fluids, etc., which are assumed to have an average lifetime γ_2 years. Thus, the entry of this material into the total environmental pool is given by

$$(1-\alpha-\beta)\ Q_s(t-\gamma_2)\ \Delta t \tag{2-10}$$

If the three components of the total environmental load, $M_{e\nu}(t)$ are summed, the resulting differential equation for $M_{e\nu}(t)$ becomes, in the limit as $\Delta t \to o$

$$\frac{dM_{e\nu}(t)}{dt} = \alpha\ Q_s(t) + (1-\alpha-\beta)\ Q_s(t-\gamma_2) + \beta\ Q_s(t-\gamma_1) \tag{2-11}$$

or

$$M_{e\nu}(t) = \alpha\int_o^t Q_s(t)dt + (1-\alpha-\beta)\int_o^t Q_s(t-\gamma_2)dt + \beta\int_o^t Q_s(t-\gamma_1)dt \tag{2-11^1}$$

In order to obtain a numerical evaluation of Equation (2-11^1) it is appropriate to note that β, the fraction of initial sales utilized for electrical applications, is given by Equation (2-5) for the period 1930-1970, and by Equation (2-7) for the post 1970 period.

An estimate of the factor α, the fraction of direct losses, can be obtained by noting that

(a) approximately 10% of the electrical material was lost during transport, production and processing.[3]

(b) approximately 30% of the non-electrical material was lost during transport, production, processing, and use.[4]

Hence,

$$\alpha = (0.1)(0.62) + (0.30)(.38)$$

$$\alpha = 0.17 \qquad (2\text{-}12)$$

It is further assumed that

$$\overline{\gamma}_1 = 20 \text{ years}^{(5)}$$

$$\overline{\gamma}_2 = 4 \text{ years}^{(6)} \qquad (2\text{-}12^1)$$

If the expression of $Q_s(t)$ given by Equation (2-3), coupled with the estimated values of α, β, γ_1, and γ_2, is introduced in Equation (2-11), the total environmental load $M_{e\nu}(t)$ may be computed. The integrated form of Equation (2-11) is:

$$M_{e\nu}(t) = 71.07 \left[0.17t^{4.39} + (0.21)(t-4)^{4.39} + (0.62)(t-20)^{4.39} \right] \qquad (2\text{-}13)$$

The numerical results are summarized in Table 2.2.2-1. It should be noted that, in contradistinction to equations such as Equation (2-3), which represent the yearly sales, Equation (2-13) represents the cumulative load in pounds.

2.2.3 Effect of Monsanto's Voluntary Ban on PCB Sales

In the actual situation, as a result of the voluntary Monsanto ban on PCB sales, the expression $M_{e\nu}(t)$ given by Equation (2-13) must be modified to account for post 1970 levels. Thus, for the period 1971 and later,

$$M_{e\nu}(t) = M_{e\nu}(40) + 0.1\int_0^{t-40} Q'(t)dt + (1-\alpha-\beta)\int_{40}^{t-40+\gamma_2} Q(t-\gamma_2)dt$$

$$+ (1-\alpha-\beta)\int_{t=40+\gamma_2}^{t} Q'(t-\gamma_2)dt + \beta\int_{40}^{t} Q(t-\gamma_1)dt \qquad (2\text{-}14)$$

TABLE 2.2.2-1

$M_{e\nu}(t)$ = Environmental PCB Load

Date	t(yrs)	Without Partial Ban [From Equation (2-13)] $M_{e\nu}(t)$ (lbs)	With Partial Ban [From Equation (2-13/2-15)] $M_{e\nu}(t)$ (lbs)
1930	0	0	0
1935	5	1.42×10^4	1.42×10^4
1940	10	3.35×10^5	3.35×10^5
1945	15	2.32×10^6	2.32×10^6
1950	20	9.1×10^6	9.1×10^6
1955	25	2.62×10^7	2.62×10^7
1960	30	6.23×10^7	6.23×10^7
1965	35	1.31×10^8	1.31×10^8
1970	40	2.54×10^8	2.54×10^8
1975*	45	4.58×10^8	3.76×10^8
1980*	50	7.79×10^8	4.66×10^8

*Equation (2-13) is not actually valid for the post 1970 period, but if the voluntary ban had not been imposed, the estimated $M_{e\nu}(1975)$ would have been as recorded in Table 2.2.2-1.

Substitution of the appropriate forms of $Q_s(t)$ and $Q_s'(t)$ and integration results in

$$M_{e\nu}(t>44) = \left.\frac{\alpha\delta t^{4.39}}{4.39}\right|_{o}^{40} + \alpha'\delta'(t-40) + \left.\frac{(1-\alpha-\beta)\delta(t-\gamma_2)^{4.39}}{4.39}\right|_{o}^{44} + \left.\frac{\beta\delta(t-\gamma_1)^{4.39}}{4.39}\right|_{o}^{t} \qquad (2\text{-}14^1)$$

which, on introduction of the appropriate numerical values [note $\alpha' = 0.1$, i.e., after 1970, the only use of PCBs was in the manufacture of electrical equipment from which some 10 percent of the material used is discarded as scrap]; becomes

$$M_{e\nu}(t>44) = 2.99 \times 10^8 + 3.31 \times 10^6\ (t-40) + 44.1\ (t-20)^{4.39} \qquad (2\text{-}15)$$

This latter Equation (2-15) has been used to compute the 1975, 1980 entries in the fourth column of Table 2.2.2-1. By comparison of the last two entries in Table 2.2.2-1, the direct effect of the voluntary ban in 1970 becomes obvious.

2.3 Mobile or Free Environmental PCBs, $m_{e\nu}(t)$

2.3.1 General Considerations on Mobile PCBs

To consider the processes by which the general environmental load of PCBs $\left(M_{e\nu}(t)\right)$ becomes free, i.e., the processes by which $m_{e\nu}(t)$ is generated, it is necessary to consider that some fraction of the direct losses are in a form such that the lost material immediately becomes mobile; i.e., spills and/or evaporation losses. Further, the non-mobile material is usually encased or enclosed in some sort of container which will eventually be degraded thus allowing the subsequent escape of the component PCB.

The fraction of the total sales that is waste occuring in all production uses of PCBs is $\alpha Q_s(t)$ of which some fraction ε is directly mobile.

Thus, in the time interval t to t + Δt, this component introduces an amount

$$\varepsilon\alpha Q_s(t)\Delta t \tag{2-16}$$

into the free environmental pool. The remainder $(1-\varepsilon)\alpha Q_s(t)$ which enters the environmental reservoir is contained in a state such that the PCB content is gradually released with a time constant $\tau_2 \equiv 1/\lambda_2$. Thus, within the reference interval t to t + Δt, an amount

$$\lambda_2(1-\varepsilon)\alpha Q_s(t)\Delta t \tag{2-17}$$

enters the mobile pool.

Further, a fraction β of the yearly sales was used to manufacture long lived electrical components, assumed to have a useful life of γ_1 years, after which the components are scrapped. Thus, the contribution of this source to the general environmental pool is

$$\beta\ Q_s(t-\gamma_1)\Delta t \tag{2-18}$$

The electrical containers in which the PCB is enclosed will eventually decay, with a half life $\tau_1 = 1/\lambda_1$. The additional component entering the mobile reservoir will be

$$\lambda_1\beta\ Q_s(t-\gamma_1)\Delta t \tag{2-19}$$

Finally, the remainder $(1-\alpha-\beta)Q_s(t)$ was used in the construction of products assumed to have a useful life of γ_2 years, after which they are discarded, thus contributing a component to the general environmental pool:

$$(1-\alpha-\beta)\ Q_s(t-\gamma_2)\Delta t \tag{2-20}$$

If it is further assumed that these products have a lifetime $\tau_2 = 1/\lambda_2$ against decay, then the contribution to the mobile environmental pool will be

$$\lambda_2(1-\alpha-\beta)\ Q_s(t-\gamma_2)\Delta t \tag{2-21}$$

On combining Equations (2-16), (2-17), (2-15) and (2-21), in the limit $\Delta t \to o$, the differential equation for $m_{e\nu}(t)$ becomes

$$\frac{dm_{e\nu}(t)}{dt} = \varepsilon\alpha Q_s(t) + \lambda_2(1-\varepsilon)\alpha Q_s(t) + \lambda_1\beta Q_s(t-\gamma_1)$$

$$\lambda_2(1-\alpha-\beta)Q_s(t-\gamma_2) \qquad (2\text{-}22)$$

$$= \left[\varepsilon\alpha + \lambda_2(1-\varepsilon)\alpha\right] Q_s(t) + \lambda_2(1-\alpha-\beta)Q_s(t-\gamma_2) + \lambda_1\beta Q_s(t-\gamma_1)$$

but, from Equation (2-3), $Q_s = 311t^{3.39} = \delta t^{3.39}$

If the parametric values given in Table 2.3.1-1 are substituted into Equation (2-22), the equation becomes

$$m_{e\nu}(t) = 24.32\int_o^t t^{3.39}\,dt + 6.53\int_o^t (t-4)^{3.39}\,dt + 1.93\int_o^t (t-20)^{3.39}\,dt$$

$$= \frac{24.32}{4.39}t^{4.39} + \frac{6.53}{4.39}(t-4)^{4.39} + \frac{1.93}{4.39}(t-20)^{4.39}$$

Thus,

$$m_{e\nu}(t) = 5.54t^{4.39} + 1.49(t-4)^{4.39} + 0.44(t-20)^{4.39} \qquad (2\text{-}23)$$

The results computed from Equation (2-23) are tabulated in Table 2.3.1-2

2.3.2 Effect of 1970 Ban on Mobile PCBs

It is now appropriate to discover the effect that the partial ban established in 1970 can be expected to have on the mobile PCB load, $m_{e\nu}(t)$.

TABLE 2.3.1-1

Parameter Values for Equation (2-22) and Equation (2-24)

$\alpha = 0.17$	$\varepsilon = 0.40$	$\alpha' = 0.1$
$\beta = 0.62$	$1-\varepsilon = 0.60$	$\delta = 311$
$1-\alpha-\beta = 0.21$		$\delta' = 3.31 \times 10^7$

$\lambda_2 = 0.1$, $\tau_{2-1/2} = 6.9$ years

$\lambda_1 = 0.01$, $\tau_{1-1/2} = 69$ years

$\gamma_2 = 4$ years $\qquad \gamma_1 = 20$ years

The operative change occurs as a result of the substitution of Equation (2-6) for Equation (2-3) in the time interval after 1970. The resulting expression for $m_{e\nu}(t \geq 40)$ is given as (recalling that the ban also stopped sales for non-electrical applications):

$$m_{e\nu}(t > 40) = \varepsilon\alpha\delta\int_0^{40} t^{3.39}dt + \varepsilon\alpha'\delta'\int_0^{t-40} dt + \lambda_2(1-\varepsilon)\alpha\delta\int_0^{40} t^{3.39}dt$$

$$+ \beta\lambda_1\delta\int_0^{t} (t-\gamma_1)^{3.39}dt + (1-\alpha-\beta)\lambda_2\delta\int_0^{t\leq 44} (t-\gamma_2)dt \quad . \qquad (2\text{-}24)$$

which, on integration and evaluation of the coefficients, becomes, using the parametric values listed in Table 2.3.1-1,

$$m_{e\nu}(t \geq 45) = 7.59 \times 10^7 + (0.44)(t-20)^{4.39} + 1.32 \times 10^6 \ (t-40). \qquad (2\text{-}24^1)$$

Numerical values derived from Equation ($2\text{-}24^1$) are listed in column 4 of Table 2.3.2-1. Again, the effect of the voluntary partial ban of 1970-71 is apparent.

It will be useful in what follows to express the numerical relationship given by Equation ($2\text{-}24^1$) in the approximate empirical form

$$\left.\begin{aligned} m_{e\nu}(t \leq 40) &= 4.83t^{4.5} \\ m_{e\nu}(t > 40) &= 1.69 \times 10^6 t^{1.02} \end{aligned}\right\} \qquad (2\text{-}25)$$

2.4 Atmospheric Reservoir of PCBs, $m_a(t)$

Suppose that some fraction θ of the instantaneous addition to the mobile environmental material is vaporized. Then within the interval t to t + Δt

$$\left[\frac{dm_a(t)}{dt}\right]_a = \theta \frac{dm_{e\nu}(t)}{dt} \Delta t$$

TABLE 2.3.2-1

Estimated Total Environmental PCB Load [$M_{e\nu}(t)$]
and Mobile Environmental PCB Load [$m_{e\nu}(t)$]

Date	t (years)	$m_{e\nu}(t)$ (1) (lbs)	$m_{e\nu}(t)$ corr (2) (lbs)	$M_{e\nu}(t)$ corr (3) (lbs)
1930	0	0	0	0
1935	5	6.49×10^3		1.42×10^4
1940	10	1.40×10^5		3.35×10^5
1945	15	8.62×10^5		2.32×10^6
1950	20	3.14×10^6		9.1×10^6
1955	25	8.54×10^6		2.62×10^7
1960	30	1.89×10^7		6.23×10^7
1965	35	3.86×10^7		1.31×10^8
1970	40	7.01×10^7	7.01×10^7	2.54×10^8
1975	45	1.19×10^8	8.31×10^7	3.76×10^8
1980	50	1.90×10^8	9.04×10^7	4.66×10^8
1990	60	4.30×10^8	1.07×10^8	8.41×10^8

Notes: (1) From Equation (2-23)

(2) From Equation (2-24[1])

(3) From Equation (2-15)

Further, suppose that the material contained within the mobile pool is vaporized with a time constant $\tau_3 = 1/\lambda_3$, then the additional component of the atmospheric reservoir is given by

$$\left[\frac{dm_a(t)}{dt}\right]_b = \lambda_3 m_{e\nu}(t)$$

Finally, suppose that the lifetime, $\tau_4 = 1/\lambda_4$, of the atmospheric reservoir results in a decay of $m_a(t)$ given as

$$\left[\frac{dm_a(t)}{dt}\right]_c = -\lambda_4\ m_a(t).$$

The total change in $m_a(t)$ with time is then given as

$$\frac{dm_a(t)}{dt} = \left[\frac{dm_a(t)}{dt}\right]_a + \left[\frac{dm_a(t)}{dt}\right]_b + \left[\frac{dm_a(t)}{dt}\right]_c \tag{2-26}$$

which on substitution of the appropriate expressions yields the differential equation for $m_{e\nu}(t)$ as follows:

$$\frac{dm_a(t)}{dt} + \lambda_4\ m_a(t) = \theta\ \frac{dm_{e\nu}(t)}{dt} + \lambda_3\ m_{e\nu}(t) \tag{2-27}$$

for which the general solution is

$$m_a(t) = e^{-\lambda_4 t}\int_0^t \left[\theta\ \frac{dm_{e\nu}(t)}{dt} + \lambda_3\ m_{e\nu}(t)\right]\ e^{\lambda_4 t}\ dt \tag{2-28}$$

After substitution from Equation (2-25a) and integrating by parts, the interim result is

$$m_a(t) = \frac{4.83}{\lambda_4}\left\{\lambda_3 t^{4.5} - 4.5\left(\frac{\lambda_3}{\lambda_4} - \theta\right)\left[t^{3.5} - \frac{3.5t^{2.5}}{\lambda_4}\right.\right.$$

$$\left.\left. + \frac{(3.5)(2.5)}{\lambda_4^{\ 2}}\ t^{1.5} - \frac{(3.5)(2.5)(1.5)}{\lambda_4^{\ 2}}\ e^{-\lambda_4 t}\int_0^t t^{0.5} e^{\lambda_4 t}\ dt\right]\right\} \tag{2-29}$$

It now becomes important to evaluate the parameters, λ_3, λ_4, and θ which appear in (2-29). First, it is noted that the cumulative total of material entering the environment from 1930 to some time t is given by the sum

$$\sum m_a(t) = \int \left[\theta \frac{dm_{ev}(t)}{dt} + \lambda_3 m_{ev}(t) \right] dt \qquad (2\text{-}30)$$

since the two terms in the integral are simply source terms. On substitution for $m_{ev}(t)$ from Equation (2-25) and carrying out the integration, Equation (2-30) becomes, after simplification,

$$\sum_{1930}^{t} m_a(t) = 4.83t^{4.5} \left[\theta + \frac{\lambda_3}{5.5} t \right] \quad \text{(lbs)} \qquad (2\text{-}31)$$

It is important at this point to indicate the essential difference between Equation (2-29) and (2-31). The latter, Equation (2-31), represents the cumulative PCB load to the atmosphere in the time from 1930 to the time $t > 1930$. On the other hand, Equation (2-29), which contains the time constant for decay of the atmospheric PCB load, represents the instantaneous PCB load in the atmosphere at time t.

To return to Equation (2-30), Nisbet and Sarofim[7] have estimated that the cumulative load of vaporized PCB in the period 1930 through 1970 was 3×10^4 tons or 6×10^7 lbs. If it is assumed that θ, the fraction of free PCB directly vaporized, is 0.1, then Equation (2-31) may be used to evaluate λ_3 as follows:

$$\sum_{1930}^{1970} m_a(t) = 6 \times 10^7 = 4.83(40)^{4.5} \left[0.1 + \frac{40\lambda_3}{5.5} \right]$$

$$\lambda_3 = 0.0918 \text{ yrs}^{-1}$$

$$\text{and} \quad (\tau_3)_{1/2} = 7.55 \text{ yrs.} \qquad (2\text{-}31^1)$$

In view of the results displayed in Equation (2-31[1]) and with the additional assumptions that $\lambda_4 >> \lambda_3$, $\lambda_4 > 1$, Equation (2-29) may be approximated as

$$m_a(t) = \frac{4.83}{\lambda_4} t^{3.5} \left\{ \lambda_3 t + 4.5\theta \right\} \tag{2-32}$$

By definition of $\sigma(t)$, the fallout,

$$\sigma(t)A = \lambda_4 m_a(t) = 4.83t^{3.5} \left\{ \lambda_3 t + 4.5\theta \right\}$$

where $A = 8.66 + 10^{13}$ ft^2 as the area of continental United States. Solving for $\sigma(t)$,

$$\sigma(t) = \frac{4.83t^{3.5}}{A} \left\{ \lambda_3 t + 4.5\theta \right\} \tag{2-33}$$

where upon, in 1974, $\sigma(t) = 1.06 \times 10^{-8}$ $lbs/ft^2/sec$, (2-33) yields a value of

$$\sigma(t = 1974) = 1.3 \times 10^{-7} \text{ lbs/ft}^2\text{/yr.},$$

a result clearly not consistent with the known value. The obvious suggestion to account for this discrepency is that the Nisbet[7] value of the cumulative atmosphere load from 1930 through 1970 is incorrect. However, no conclusion as to the reason for this can be reached at present.

2.4.1 Time Dependence of $\sigma(t)$ and of $B(t)$

From Equation (2-33) and the known value of $\sigma(t)$ in 1974 (1.06×10^{-8} $lbs/ft^2/yr$), it is apparent that Equation (2-33) yields the correct value if the term $\lambda_3 t << 4.5\theta$, so that, it is appropriate to take, where $\theta = 0.1$

$$\sigma(t) = \sigma_0(t)t^{3.5} \text{ lbs/ft}^2\text{/yr} \tag{2-34}$$

and, since fallout constitutes the predominant PCB input source to Lake Michigan (see Section 3), the forcing function $B(t)$ will be taken to be of the form

$$B(t) = \alpha t^{3.5} \tag{2-35}$$

The coefficient α will be evaluated in terms of the specific application for which Equation (2-35) is the driving function.

3.0 DERIVATION OF PHYSICAL CONSTANTS FOR LAKE MICHIGAN

3.1 General Properties[8]

From various atlas and other sources, for Lake Michigan

$A = 2.24 \times 10^4$ mi^2 $= 6.24 \times 10^{11}$ ft^2 = area of lake.

$S = 1.2 \times 10^{14}$ lbs/yr [6×10^4 ft^3/sec in average flow through Straits of Mackinac]

$Q = 1.1 \times 10^{16}$ lbs = total water mass in lake.

$A' = 5 \times 10^4$ m^2 $= 1.29 \times 10^{12}$ ft^2 (average drainage area)

3.2 Proportioning Constants

In order to determine the most appropriate values for the proportionality constants, ρ^* and η, in the absence of a well-founded theoretical explanation of the physical processes which determine them, it is necessary to rely on in-situ measurements of concentration over wide regions of the target water body to establish reasonable statistical reliability. Actually, such a body of data does not exist for Lake Michigan at this time. On the other hand, such data do exist for Lake Ontario which should allow at least a reasonable estimate of the appropriate values for Lake Michigan.

3.2.1 Concentration Ratio of Biota to Water, η

Sampling of Lake Ontario, conducted in 1972 at several near-shore and mid-lake sites, indicated the following:[9]

a. PCB in fish (alewives, smelt, slimy sculpin) $= 2.35 - 5.13 \times 10^6$ ppt
b. PCB in water (total conc. dissolved + particulate) $= 55$ ppt
c. Average PCB in sediments $= 1.2 \times 10^5$ ppt
d. Average PCB in wet plankton $= 7.2 \times 10^6$ ppt
e. PCB in the benthos $= 4.7 \times 10^5$ ppt

In view of these data, it appears that a realistic value for the constant η, considering the nature of the food chain, is

$$[\eta \sim 4 \times 10^4]$$

for Lake Ontario which, by inference, should also apply to Lake Michigan. It should be noted that η is taken as an average concentration ratio over all members of the biota; thus, there will be specific species showing considerable variation from the assumed value.

Since the basic physical processes that account for this partitioning of PCB-like materials should be independent of the actual concentration of PCBs in the aqueous phase (so long as the aqueous solution is less than saturated), it is reasonable to assume that η is independent of time.

3.2.2 Concentration Ratio of Sediment to Water, ρ

From a number of measurements of sediment levels within Lake Michigan (24 sites),[10] an average PCB concentration of 38.2 ppb was calculated; this is the presence of an average water concentration of 20 ppt. Since these specific points were taken from the southern part of the lake, where the contamination is known to be higher, an average value of ρ has been taken to be:

$$\rho = 2 \times 10^3$$

The deposition rate for the lake, D, is[11]

$$D = 5.7 \times 10^6 \text{ lbs/mi}^2\text{/yr}$$

3.3 Biota Mass, G, for Lake Michigan

A representative value for the biomass in Lake Michigan, recognizing the relatively limited data that are available on specific species and the absence of a detailed ecological pyramid, may be obtained from the estimates contained in Table 3.3-1.

In addition, the relatively polluted nature of the southernmost portion of the Lake results in large masses of benthic species, such as tubifex

TABLE 3.3-1

Estimates of Biota Mass for Lake Michigan

Estimates for the Fish Mass[12]

a.	Lake trout (from Michigan waters of the Lake)	- 11.2×10^6 lb (1972)
b.	Whitefish (in Northern Lake Michigan)	- 55×10^6 lb (1972)
c.	Chubs (those available to bottom trawls)	- 15×10^6 lb (1973)
	(note: decline in chubs from 139×10^6 lb in 1963-65)	
d.	Alewives (those available to bottom trawls + estimate of the midwater individuals)	- 2×10^9 lb (1973)
e.	Coho Salmon (estimate based on the number stocked)	- 7.6×10^6 lb (1972)
	Total	- 2.1×10^9 lb (1972-73)

Estimates for the Plankton Biomass:

a. Assume 300 kg plankton/hectare of lake

b. Area of Lake = 22,400 mi^2 = 5.8×10^6 hectares

c. Plankton biomass = $(5.8 \times 10^6)(300 \text{ kg}) = 1.74 \times 10^{12}$g = 3.8×10^9 lb

worms. In view of this, it is assumed that the benthic biomass is of the order of 4×10^9 lbs.

Finally, in terms of the above, a representative value for the total biotic mass, G, appears to be of the order of 10^{10} lbs which, in view of its approximate value, is taken to have been constant over the time interval of interest.

3.4 Input Rate [B(t)] for the Period 1973-1974

The PCB inputs to Lake Michigan consist of three parts:

a. that due to fallout on the lake;

b. that due to fallout on the drainage area and subsequent extraction by ground waters; and

c. that due to point sources, industrial and sewage treatment plants.

3.4.1 Point Source Inputs

Data on PCB concentrations are available only for eight of the tributary streams in Michigan. In addition, historical data collections seldom extend back beyond 1970-1972. These data, for the St. Joseph, Kalamazoo, Grand, Muskegon, Marristee, Broadman, Elk and Portage Rivers[13] indicate that, during the recent period, the yearly load of PCBs from these rivers was about 1000 lb/yr. Using these limited data on stream concentration due to industrial and sewage treatment plants, the following estimates of yearly load can be made:[14]

Michigan	- 217.2 lb/yr	(1974, STPs)
Wisconsin	- 1,150.0 lb/yr	(1974-75, paper plant effluents)
Wisconsin	- 130.3 lb/yr	(1974-75, STPs)
Wisconsin	- 20.1 lb/yr	(1974, misc. industry)
Indiana	- 123.3 lb/yr	(1972, STPs)
Illinois	- 3.1 lb/yr	(1971, STPs)
	1,644.0 lb/yr = 1.6×10^3 lb/yr	

3.4.2 Fallout on Lake Michigan

A variety of fallout rate measurements have been reported[17] indicating rates as high as 0.5 $lbs/mi^2/yr$ = 87 $\mu g/m^2/yr$ in the heavily industrialized portion of Sweden[15] to the other extreme of 17.5 $\mu g/m^2/yr$ observed in Iceland.[16] In view of the rather heavy concentration of industry in the Lake Michigan area, it will be assumed that the average fallout in the 1974 era was 50 $\mu g/m^2/yr$.

Thus, taking the area of the lake to be 5.8×10^{10} m^2, the annual fallout should be of the order of

$$B_{\text{fallout direct}} \sim 6.4 \times 10^3 \text{lbs/yr in 1974.}$$

3.4.3 Fallout onto Drainage Basin

In order to compute the contribution of PCB input to the lake due to fallout on the drainage basin, the separate contributions from each of the adjourning states is computed in Table 3.4.3-1.

3.4.4 Total Input to Lake (1974)

From Table 3.4.3-1 and the data in Sections 3.4.1 and 3.4.2, the contributions to the PCB input are taken to be:

Point sources	1.6×10^3 lbs/yr	
Lake fallout	6.4×10^3 lbs/yr	
Basin fallout	5.4×10^3 lbs/yr	(where it is assumed that 50 percent of basin fallout actually enters the lake)[12]

$$B(1973\text{-}74) = 13.4 \times 10^3 \text{ lbs/yr}$$

From Equation (2-35),

$$B(t) = \alpha t^{3.5}$$

TABLE 3.4.3-1

PCBs Inputs to Lake Michigan - 1974

a. For the Michigan portion of the drainage basin:[18]

PCB load = $(50\ \mu g/m^2/yr)(6.0 \times 10^{10}\ m^2) = 3 \times 10^{12}\ \mu g$ PCB/yr

$= 6.6 \times 10^3$ lb PCB/yr

b. For the Wisconsin portion of the drainage basin:[19]

PCB load = $(50\ \mu g/m^2/yr)(3.7 \times 10^{10}\ m^2) = 1.9 \times 10^{12}\ \mu g$ PCB/yr

$= 4.1 \times 10^3$ lb PCB/yr

c. For the Illinois portion of the drainage basin:[20]

PCB load = $(50\ \mu g/m^2/yr)(8.0 \times 10^8\ m^2) = 4.0 \times 10^{10}\ \mu g$ PCB/yr

= 88.1 lb PCB/yr

d. For the Indiana portion of the drainage basin:[21]

PCB load = $(50\ \mu g/m^2/yr)(1.85 \times 10^8\ m^2 = 9.3 \times 10^9\ \mu g$ PCB/yr

= 20.4 lb PCB/yr

e. Total annual fallout from all four sectors of the basin:

$= 1.08 \times 10^4$ lb PCB/yr

which for the reference year, 1974, was estimated to be

$$13.4 \times 10^3 = \alpha (44)^{3.5}$$
$$\alpha = .0237$$

so that, in what follows,

$$B(t) = 0.0237t^{3.5} \tag{3-1}$$

4.0 APPLICATION OF THE MASS BALANCE EQUATION TO LAKE MICHIGAN

4.1 Physical and Hydrologic Constants for Lake Michigan

The values used for the various physical and hydrologic constants for Lake Michigan are listed below:[23]

A	= surface area of the lake = 6.24×10^{11} ft^2
S	= outflow through Strait of Mackinac = 1.2×10^{14} lb/yr
Q	= water mass in lake = 1.1×10^{16} lbs
D	= sediment deposition rate = 0.204 lbs/ft^{2}yr
η	= biota/water concentration ratio = 4×10^4
ρ	= sediment/water concentration ratio = 2×10^3
B (1974)	= PCB input rate in 1974 = 1.34×10^4 lbs
K	= evaporation rate constant = 2.2×10^{14} lbs/yr [this assumption will be discussed below]

Then, from the data above, the various factors appearing in Equation (1-9[1]) may be evaluated as follows:

$$AD\rho = 2.25 \times 10^{14} \text{ lbs/yr}$$

$$Q + G\eta = 1.14 \times 10^{16} \text{ (lbs)}, \quad (Q + G\eta)^{-1} = 8.77 \times 10^{-17} \text{ (lbs)}^{-1}$$

$$S + K + AD\rho = 5.7 \times 10^{14} \text{ lbs}$$

$$X = \frac{S + K + AD\rho}{Q + G\eta} \sim 0.05$$

$$Y = \frac{1}{Q + G\eta} = 8.77 \times 10^{-17}$$

4.2 Integration of the Mass Balance Equation

In terms of the parameters for the lake and the assumed form for B(t) from Equation (3-1), the differential equation for C(t), Equation (1-9) becomes:

$$C(t_f) = 2.08 \times 10^{-18} \, e^{-0.05t_f} \int_0^{t_f} t^{3.5} \, e^{0.05t} \, dt \qquad (4\text{-}1)$$

where the PCB concentration is taken to be zero in 1930, i.e., at t = 0.

Equation (4-1) cannot be directly integrated in terms of simple algebraic functions so that recourse must be had to numerical integration to yield the results tabulated in Table 4.2-1.

For convenience in what follows, the relationship between $C_w(t_f)$ and t_f will be assumed to be of the form:

$$C_w(t_f) = bt^n$$

where b, and n are determined by a least squares fit to the data in Table 4.2-1. The results of this analysis may be summarized in the equation

$$C_w(t_f) = 4.56 \times 10^{-19} t_f^{\,4.416} \qquad (4\text{-}2)$$

From Equation (4-2), the change in $C_w(t)$ over a one-year period is found to be

$$\frac{dC_w(t)}{dt} = 2.01 \times 10^{-18} t^{3.416} \qquad (4\text{-}2^1)$$

Thus, for the reference year, 1974, the average water concentration was about 8×10^{-12} and the change in concentration during the reference year was 0.80×10^{-12}. From these data, it is possible to determine the material balance during 1974 as is shown below:

Total input	1.34×10^4 lbs
Increase in solution	8.81×10^3 lbs
Increase in biota	0.32×10^3 lbs
Increase in sediment	1.8×10^3 lbs
Increase in outflow	0.96×10^3 lbs
Net loss due to evaporation	1.52×10^3 lbs

From Equation (1-6), it is now possible to estimate the evaporation rate constant K,

$$K = \frac{\Delta m_{evap}}{\overline{C}_w} = \frac{1.52 \times 10^3}{8 \times 10^{-12}} \sim 2 \times 10^{14} \text{ lbs/yr}$$

To discover the material balance over the entire period, 1930 through 1975, the total PCB input to the Lake is given by

$$Q_{input} = \int_0^{45} B(t)dt = 0.0237 \int_0^{45} t^{3.5}\, dt$$

$$= 1.49 \times 10^5 \text{ lbs} \qquad (4\text{-}3)$$

The average concentration $\overline{C}_w(t)$ over the reference period is

$$\overline{C_w(t)} = \frac{4.56 \times 10^{-19}}{45} \int_0^{45} t^{4.416} dt \qquad (4\text{-}4)$$

$$= 1.68 \times 10^{-12}$$

The cumulative loads in Lake Michigan in the various phases are summarized below:

Total input (1930-1975)	$= 1.49 \times 10^5$ lbs
Total in water	$= 1 \times 10^5$ lbs
Total in biota	$= 3.64 \times 10^3$ lbs
Total in sediments	$= 1.7 \times 10^4$ lbs
Total in outflow	$= 9.07 \times 10^3$ lbs
Net loss due to evaporation	$= 1.93 \times 10^4$ lbs

TABLE 4.2-1

Concentration of PCB in Solution in Lake Michigan*

Date	t_f	$C_w(t_f)$	$C_w(t_f)$ (ppt)
1930	0	0	0
1935	5	4.94×10^{-16}	4.94×10^{-14}
1940	10	1.34×10^{-14}	1.34×10^{-2}
1950	20	2.79×10^{-13}	0.28
1960	30	1.60×10^{-12}	1.60
1965	35	2.92×10^{-12}	2.92
1970	40	5.35×10^{-12}	5.35
1975	45	9.10×10^{-12}	9.10

*Measurements in 1970 indicate a range of aqueous concentration of 1 to 7.5 ppt[13]

From the net loss of PCB due to evaporation from the above data, and the defining equation for the evaporation losses, Equation (1-6), the evaporation rate constant K may be evaluated,

$$K = \frac{\Delta m_{evap}}{\bar{C}_w(t)\Delta t} = \frac{1.93 \times 10^4}{1.68 \times 10^{-12} \times 45} = 2.56 \times 10^{14} \text{ lbs/yr} \qquad (4\text{-}5)$$

The several values of K, from Equation (4-5) and the earlier value determined from the 1974 situation, are averaged to yield a useful value

$$K = 2.2 \times 10^{14} \text{ lbs/yr} \qquad (4\text{-}6)$$

4.3 Temporal Variation of Concentration of PCB in the Various Phases of the Lake

It is now possible to combine the relationship expressed by Equation (4-2) with the definition of the biotic concentration factor η from Equation (1-2), to determine the variation of biotic concentration with time. The data enumerated in Table 4.3-1 indicate the trends. When it is noted that the concentration data in Table 4.3-1 are given in parts-per-trillion, it is clear that the average biota concentration neared the one part-per-million level on as early as 1965. It is also evident, because of the considerable spread in specific biotic concentration factors for specific species, that the higher predictors could easily have exceeded the one ppm level as early as 1960.

TABLE 4.3-1

Temporal Variation of Biotic Concentration

Date	C_w (ppt)	C_{biota} (ppt)
1930	0	0
1935	4.9×10^{-4}	1.97
1940	1.34×10^{-2}	5.36×10^{2}
1945	7.12×10^{-2}	2.84×10^{3}
1950	0.28	1.12×10^{4}
1955	0.68	2.72×10^{4}
1960	1.60	6.4×10^{4}
1965	2.92	1.17×10^{5}
1970	5.35	2.14×10^{5}
1975	9.10	3.64×10^{5}

4.4 Physical Interpretation of K, the Mass Evaporation Constant

4.4.1 Kinetic Theory

Experimental data[24] on the evaporation rate of Aroclor 1254 indicates that, at 100°C (373°K), the evaporation rate is 1.47×10^{-8} gm/cm^2/sec and the vapor pressure is 5×10^{-2} mm Hg. From elementary kinetic theory of gases,[25] the relationship between evaporation rate and vapor pressure is given

$$m(\text{gm/cm}^2/\text{sec}) = \delta \left[\frac{m}{2\pi RT}\right]^{1/2} P \qquad (4\text{-}7)$$

where δ = the measure of the probability that a collision with the surface does not result in the molecule sticking to the surface

R = the gas constant per mole [8.31×10^7 erg (°K)$^{-1}$]

T = the absolute temperature [°K]

m = the molecular weight [gms]

P = the vapor pressure [dynes/cm^2]

From Equation (4-7) and the known evaporation rate,[24] the numerical value of δ may be computed as follows:

$$1.47 \times 10^{-8} = \delta \left[\frac{325}{2\pi \times 8.31 \times 10^7 \times 373}\right]^{1/2} \frac{5 \times 10^{-2}}{760} \times 10^6$$

$$\text{or} \qquad \delta = 5.47 \times 10^{-6} \qquad (4\text{-}8)$$

If it is assumed that δ is not temperature dependent at temperatures considerably removed from the normal boiling temperature, and that Equation (4-7) may be applied to a solution as well as to the pure liquid, then at ambient temperature (298°K) where the vapor pressure of Aroclor 1254 is 7.7×10^{-5} mm Hg,[24]

$$m(\text{gm/cm}^2/\text{sec}) = 5.47 \times 10^{-6} \left[\frac{325}{2\pi \times 8.3 \times 10^7 \times 298}\right]^{1/2} \frac{7.7 \times 11^{-5}}{760} \times 10^6$$

$$\text{or} \qquad m = 2.53 \times 10^{-11} \text{ gm/sec/cm}^2$$

Now the area of the lake is 5.8×10^{14} cm^2, hence

$$m(\text{lbs/year}) = 2.08 \times 10^{14} \text{ (lbs/yr)} \tag{4-9}$$

The value of m from Equation (4-9) is in excellent agreement with the value of K empirically determined to be 2.2×10^{14} lbs/yr.

4.4.2 Application of the Theory of MacKay and Wolkoff[26]

Following MacKay and Wolkoff,[26] the rate of material loss for a slightly soluble solute from a water-air interface is given, for a system wherein the solute concentration is less than the saturation concentration, by:

$$\frac{dC_i}{dt} = -\frac{EP_{is}M_i}{G'M_wP_wC_{is}} C_i \tag{4-10}$$

where:
- A = area of the lake surface (6.24×10^{11} ft^2)
- E = mass evaporation rate of water (1.38×10^{12} lb/yr)[11]
- P_{is} = equilibrium vapor pressure of pure solute (7.7×10^{-5} mm Hg)[27]
- M_i = molecular weight of solute (325-Aroclor 1254)
- G' = mass of water from which evaporation occurs
- M_w = molecular weight of water (18)
- C_{is} = saturation concentration of solute (6×10^{-8})[27]
- P_w = equilibrium vapor pressure water (23.7 mm Hg)
- C_i = concentration of solute in the evaporation layer
- ρ = density of water (62.5 lbs/ft^3)

Equation (4-10) must be modified for the present situation to take into account the effect of fallout on the solute concentration. Thus, for the case in point,

$$\frac{dC_i}{dt} = \frac{\sigma(t)A}{G'} - \frac{EP_{is}M_i}{G'M_wP_wC_{is}} C_i \tag{4-11}$$

The expression $\sigma(t)$ which occurs in Equation (4-11) is taken to be of the form [from Equation (2-34)]

$$\sigma(t) = 1.67 \times 10^{-14} t^{3.5} \tag{4-12}$$

Further substitution of $G' = A\rho\xi$, where ξ is the thickness of the layer from which evaporation is occuring, and $E = A\rho l'$, where l is the evaporation rate in ft/year, reduces Equation (4-12) to the form

$$\frac{dC_i}{dt} = \frac{1.67 \times 10^{-14} t^{3.5}}{\xi\rho} - \frac{lP_{is}M_i}{\xi M_w P_w C_{is}} Ci \tag{4-12^1}$$

which is now applicable to a unit area of the lake.

The solution of Equation (4-12^1) is complicated by the fact that ξ, the layer thickness, is unknown. To obtain some idea of the magnitude of ξ, it is reasonable to assume that

$$C_i(t) = \gamma C_w(t) \tag{4-13}$$

where γ may be a function of time. Substitution of Equation (4-13) and the appropriate numerical values with Equation (4-12) and evaluating for t = 44 years (1974), yields [after using Equation (4-2) for $C_w(t)$]

$$8.22 \times 10^{-13} \gamma + 2.66 \times 10^{-10} \frac{\gamma}{\xi} = \frac{1.51 \times 10^{-10}}{\xi} \tag{4-14}$$

Now, $\frac{K}{A} = \frac{lP_{is}M_i}{\xi M_w P_w C_{is}} \gamma$ from the definition of K. Hence, from this last relation, evaluated at t = 44 years,

$$\frac{\gamma}{\xi} = 10.92 \tag{4-15}$$

Substitution of (4-15) into (4-14) yields

$$\gamma = 0.57$$
$$\xi = 0.052 \text{ ft}^{(28)} \tag{4-16}$$

It is apparent, from Equations (4-16) and (4-13), that this analysis suggests that the average concentration in the layer is less than that in the bulk water, i.e., $\gamma < 1$. The reason for this apparent anomaly can be seen by recognizing that Equation (4-12) is in the form

$$\frac{dc}{dt} = \frac{\sigma(t)}{\xi P} - \lambda_i C_i \tag{4-17}$$

where $\lambda_i \equiv \frac{1 P_{is} M_i}{\xi M_w P_w C_{is}} = 617 \text{ yrs}^{-1}$

is the effective decay constant for the surface layer concentration. In terms of the half-life

$$(\tau_i)_{1/2} \sim 10 \text{ hours} \tag{4-17^1}$$

Equation (4-17) may be integrated from a time t to $t + 1/\lambda$ to yield, where the interval is sufficiently short that $\sigma(t)$ may be assumed to be constant;

$$C_i = 0.37\, C_{io} + 3.34 \times 10^{-12} \tag{4-18}$$

If the assumed relationship between C_i and C_w, given by Equation (4-13) is introduced as (C_{io} = PCBs concentration at time t)

$$C_o = \gamma C_{io}$$

$$C_i = \gamma (C_w + \Delta C_w) \sim \gamma C_w$$

then

$$\gamma (1 - 0.37) = \frac{3.34 \times 10^{-12}}{C_w}$$

$$\gamma = 0.74 \tag{4-19}$$

This shows good agreement with the results expressed in Equation (4-16).

5.0 RESULTS AND CONCLUSIONS

5.1 Results

Even though the model used is only first-order, it is apparently able to describe the relative significance of the natural processes which control the distribution of PCBs. The strong focus on fallout as the primary input source of PCBs to Lake Michigan suggests the need for further study of the nature of the processes by which PCBs become airborne and thus become part of the available atmospheric reservoir.

The attempt to model the atmospheric reservoir of PCBs, discussed in Section 2, yields results that indicate significantly greater cumulative atmospheric loads than the preliminary estimate, made by Nisbet and Sarofim,[7] of a cumulative atmospheric reservoir of 3×10^4 tons up to 1970. The estimate of Nisbet and Sarofim leads to a half-life, from the model, for PCBs in the atmospheric reservoir on the order of eight years. This value is considerably in excess of the reported lifetime measurements, on the order of 20 to 40 days, for atmospheric PCBs.[29] However, the observation that significant levels of PCBs are found in present snowfalls and in packed snow in Antarctica[30] suggests that the applicable half-life may indeed be considerably longer than 20 to 40 days.

It is suggested that further refinement of the environmental distribution model presented in Section 2 will lead to a resolution of this apparent discrepancy. This refinement will focus attention on the nature of the physical processes involved in atmospheric transport of PCBs and may suggest methods of reducing PCB fallout in the future.

The observation that evaporation and/or co-distillation seems to be a significant process by which PCBs are returned to the atmosphere is of importance. It should be noted that the magnitude of the evaporation rate constant necessary to achieve mass balance in Lake Michigan is in excellent agreement with that computed from the simple kinetic theory of gases and also with that computed from the theory of co-distillation discussed by MacKay and Wolkoff.[26]

The observation that the PCB input to Lake Michigan from point sources seems to be a rather small part of the total input suggests that reduction of point source PCB effluents may only slowly correct the present problem.

5.2 Conclusions

The first-order mass balance model described herein seems useful in describing the historical situation as it explicitly addresses the question "How did we get here?". The model requires refinement before it can be used to allow a reasonable estimate of future conditions. Significantly more detailed data are required as to the temporal variation of inputs and concentrations as well as on the interval transport processes by which localized concentrations are smoothed and distributed over the whole body. While the present model seems to deal very well with the situation that obtains during an interval of rising aqueous concentrations, there seems to be little experimental or theoretical guidance as to what will happen if, in the future, aqueous concentrations begin to fall. It is not known whether the biota and the sediments will act as reservoirs to return their PCB loads to the system. The processes, if any exist, which will eventually remove or inactivate the PCBs already in the lithosphere are not known.

The application of this model to the situation in Lake Michigan seems successful. It will be of interest to apply it to regions which are more complex or of larger scale.

5.3 Discussion of Results

With regard to Lake Michigan, the mass balance indicates that this fresh water system (water, sediment, biota) serves as a significant sink for PCBs; this must also apply to many other fresh water systems. In the case of toxic metals, the oceans are generally recognized as an important ultimate sink, but this may not be the case for PCBs.

The theory developed by MacKay and Wolkoff,[26] as applied to Lake Michigan conditions, yields a lifetime against (until) evaporation of about

ten hours. For seawater, this lifetime is greatly reduced by lower solubility of PCBs and higher evaporation rate, so that the calculated lifetime of PCBs in seawater against evaporation may be as low as ten minutes.

Although attachment to organic and living material may well be a factor, the above result indicates that PCBs tend to evaporate from salt water much more quickly than from fresh water. Then, on this basis, the terrestrial systems, such as fresh water lakes, forests, etc., must be regarded as partial sinks for PCBs in fallout; the PCBs lost from these systems reenter the atmosphere via direct evaporation or transport by rivers to salt water from which further evaporation occurs. New PCBs are added to the atmospheric load by direct evaporation, through inadequate incineration processes, or via water from runoff, industrial discharges, landfill leachate, etc.

6.0 GLOSSARY OF SYMBOLS USED

A	Surface area of reference body of water (ft^2)
$B(t)$	PCB injection rate with reference body of water (lbs/yr)
$C_w(t)$	Aqueous PCB concentration
D	Sediment rate in reference body of water ($lb/ft^2/yr$)
G	Mass of biota in reference body of water (lbs)
K	PCB evaporation rate constant (lbs/yr)
$M_{e\nu}(t)$	Cumulative environmental PCB load (lbs)
$m_{e\nu}(t)$	Cumulative free environmental PCB load (lbs)
$m_a(t)$	Instantaneous atmospheric reservoir of PCBs (lbs)
Q	Mass of water in reference body of water (lbs)
$Q_{cap}(t)$	Cumulative PCB sales for capacitor application (lbs)
$Q_{electrical}(t)$	Cumulative PCB sales for electrical application (lbs)
$Q_{prod}(t)$	Cumulative PCB sales for production application (lbs)
$Q_{sales}(t)$	Cumulative PCB sales for all applications (lbs)
$Q_{trans}(t)$	Cumulative PCB sales for transformer application (lbs)
S	Water outflow rate from reference body of water (lbs/yr)
t	Time (yrs), ($t = 0$ in 1930)
α	Fraction of PCB sales directly lost to the environment
β	Fraction of PCB sales devoted to electrical applications
γ_1	Average in-service life of electrical components (yrs)
γ_2	Average in-service life of non-electrical products (yrs)
ε	Fraction of production waste initially free
θ	Fraction of initially free PCBs that are vaporized

λ_1	Decay constant for discarded PCB-containing electrical components (yr^{-1})
λ_2	Decay constant for discarded PCB-containing non-electrical products (yr^{-1})
λ_3	Decay constant for vaporization of free PCBs (yr^{-1})
λ_4	Decay constant for fallout of atmospheric PCBs (yr^{-1})
η	Ratio of biota PCB concentration to aqueous PCB concentration
ρ	Ratio of sediment PCB concentration to aqueous PCB concentration
$\sigma(t)$	Fallout rate per unit area ($lbs/ft^2/yr$)
τ_1	Half-life of containment of discarded PCB-containing electrical components (yr)
τ_2	Half-life of containment of discarded PCB-containing non-electrical components (yr)
τ_3	Half-life of free PCBs for vaporization (yr)
τ_4	Half-life of atmospheric PCBs against evaporation (yr)

7.0 BIBLIOGRAPHY

The literature resulting from analytical measurements on a wide variety of biological and geological specimens has become very large. The following list, while in no sense complete, represents those sources used in this work.

1. Addison, R.F., S.R. Kerr, J. Dale, and D.E. Sergeant, J. Fish Res. Board Can., 30, 595, 1973.

Anonymous, "Chemicals Found in Lake Fish: State PCB Ban Urged." Michigan Out-of-Doors, July, 1975.

Bailey, S., P.J. Buryan, and F.B. Fishwick. Chemistry and Industry 22: 705, 1970.

Bowes, G.W. and C. Jonkel, in PCB in the Environment, Marcel Dekker Inc., New York, 1974.

Carey, A.E., G.B. Weirsma, H. Tai, and W.G. Mitchell. Pesticides Monitoring Journal 6(4): 369-376, 1973.

Crump-Weisner, H.J., H.R. Feltz, and M.L. Yates. Pesticides Monitoring Journal 8(3): 157-161, 1974.

Doguchi, M., New Methods in Environmental Chemistry and Toxicology. Proceedings of the International Symposium, Susono, Japan, 1973; Coulston, F., Korte, F., and Goto, M., Eds., International Academic Printing Co., Tokyo, Japan, 1973.

Duke, T.W., J.I. Lowe, and A.J. Wilson, Jr. Bulletin of Environmental Contamination and Toxicology; 5(2): 171-180, 1970.

Edwards, R. "Polychlorinated Biphenyls, Their Occurence and Significance: A Review." Chemistry and Industry (No Volume) Issue 47: 1340-8 (21 November, 71), 1971.

Fog, M., and I. Kraul, Acta Vet. Scand., 14, 350, 1973.

Frank, R., K. Ronald, and H.E. Braun, J. Fish Res. Board Can., 30, 1053, 1973.

Giam, C.S., M.K. Wong, A.R. Hanks, and W.M. Sackett, Bull. Environ. Contam. Toxicol., 9, 376, 1973.

Greichus, Y.A., A. Greichus, and R.J. Emerick, Bull. Environ. Contam. Toxicol., 9, 321, 1973.

Gustafson, C.G., Environmental Science and Technology 4(10): 814-819, 1970.

Harvey, G.R., H.P. Mlklas, V.T. Bowen, and W.G. Steinhauer. Journal of Marine Research 32(2): 103-118, 1974.

Heppleston, P.B., Mar. Pollut. Bull., 4, 44, 1973.

Hidaka, K., T. Ohe, and K. Fujiwara, Shokuhin Eiseigaku Zasshi, 13, 523, 1972: C.A., 79, 028100, 1973.

Huschenbeth, E., Schr. Ver. Wasser-, Boden-, Lufthyg., Berlin-Dahl, 37, 103, 1972.

Hom, W., R.W. Risebrough, A. Soutar, and D.R. Young. Science 184 (4142).

Interdepartmental Task Force on PCBs. "Polychlorinated Biphenyls and the Environment." COM-72-10419. 1-192. National Technical Information Service, Springfield, Virginia (U.S. Dept. of Agriculture, Commerce, Health-Education and Welfare, EPA, and other agencies), 1972.

Lunde, G., J. Gerber, and B. Josefsson. Bulletin of Environmental Contamination and Toxicology 13(6): 656-661, 1975.

Law, L.M., and D.P. Oberlitz. Pesticides Monitoring Journal 8(1): 33-36, 1974.

Martell, J.M., D.A. Rickert, and F.R. Siegel. Environmental Science and Technology, 9: 872-75, 1974.

Oloffs, P.C., L.J. Albright, and S.Y. Szeto. Canadian Journal of Microbiology 18(9): 1393-1398, 1972.

Oloffs, P.C., L.J. Albright, S.Y. Szeto, and J. Lau. Journal of Fisheries Research Board of Canada, 30(11): 1619-1623.

Panel on Hazardous Trace Substances. "Polychlorinated Biphenyls-Environmental Impact." Environmental Research 5(3): 249-362. 1972.

Peel, D.A., Nature, 254: 324-325, 1975.

Risebrough, R.W., P. Reiche, D.B. Peakall, S.G. Harman, and M.N. Kirven, Nature (12/14): 1098-1102, 1968.

Risebrough, R.W., and B. deLappe. Environmental Health Perspectives Exp 1: 39-45, 1972.

Saschenbrecker, P.W., Can. J. Comp. Med., 37, 203, 1973.

Smith, W.E., K. Funk, and M.E. Zabik, J. Fish. Res. Board Can., 30, 702, 1973.

Walker, W.H., "Where Have All the Toxic Chemicals Gone?" Ground Water 11(2): 11-20, 1973.

2. Monsanto Industrial Chemicals Company, "PCB Manufacture and Sales-Monsanto Industrial Chemicals Company - 1957 thru 1964." (unpublished data), 1974a.

Monsanto Industrial Chemicals Company, "PCB Manufacture and Sales-Monsanto Industrial Chemicals Company - 1965 thru 1974." (unpublished data), 1974b.

3. Ruopp, D.J. and V.J. DeCarlo, U.S. Environmental Protection Agency, Washington, D.C. - Private communication.

4. Nisbet, C.T. and A.F. Sarofim, Environmental Health Perspectives, Exp 1, 21-38, 1972.

5. Section V, "Industrial Characterization" and Section IX, "PCBs Release and Cumulative Environmental Loads" of this report.

6. Section V, "Industrial Characterization" and Section IX, "PCBs Release and Cumulative Environmental Loads" of this report.

7. Nisbet, C.T., and A.F. Sarofim. Environmental Health Perspectives Exp 1: 21-38, 1972.

8. Annon., World Almanac, Washington Star News, Washington, D.C., 1975.

9. National Water Quality Inventory. Report to the Congress. Vol II. EPA-440/9-74-001. Office of Water Planning and Standards. Appendices C-1 to C-69, D-1 to D-55, E-1 to E-76., 1974.

   International Joint Commission on the Great Lakes. Pollution of Lake Erie, Lake Ontario and the International Section of the St. Lawrence River, Vol 3, 1969.

10. Hesse, J.L. Status Report on Polychlorinated Biphenyls in Michigan Waters. Report to Michigan Water Resources Commission., 1973.

11. Annon, World Almanac, Washington Star News, Washington, D.C., 1975.

12. Great Lakes Fisheries. Summary of United States and Canadian Landings (Preliminary Data)., 1974.

    Michigan Department of Natural Resources Fisheries Division. Estimates of Biomass of Principal Fish Species in the Great Lakes (first report). Fisheries Research Report No. 1813., 1974.

13. State of Michigan Water Resources Commission, Bureau of Water Management. Polychlorinated Biphenyl Survey of the Kalamazoo River and Portage Creek in the Vicinity of the City of Kalamazoo, 1972.

    State of Michigan Water Resources Commission, Bureau of Water Management. Monitoring for Polychlorinated Biphenyls in the Aquatic Environment. Report to Lake Michigan Toxic Substances Committee, May, 1973.

    Haile, C.L., G.D. Veith, G.F. Lee, and W.C. Boyle, Chlorinated Hydrocarbons in the Lake Ontario Ecosystem., 1975.

14. Veith, G.D. Environmental Health Perspectives Exp 1: 51-54, 1972.

Veith, G.D., and G.F. Lee. Water Research 5(11): 1107-1115, 1971.

Schmidt, T.T., R.W. Risebrough, and F. Gress. Bulletin of Environmental Contamination and Toxicology 6: 235-243, 1971.

15. Panel on Hazardous Trace Substances. Environ. Res., 5, 1972.

16. Bengston, S.A., Ambio, 3 No. 2, p. 84, 1974.

17. Bevenue, A., J.M. Ogata, and J.W. Hylin. Bulletin of Environmental Contamination and Toxicology 8(4): 238-241, 1972.

Bidleman, T.F., and C.E. Olney. Science 183 (4142): 516-518. 2nd Copy, 1974.

Bidleman, T.F., and C.E. Olney. Bulletin of Environmental Contamination and Toxicology 11(5): 442-450, 1974.

Harvey, G.R., and W.F. Steinhauer. Atmospheric Environment 8(8): 777-782, 1974.

Holden, A.V. Nature 228(12/19): 1220-1221, 1970.

Södergren, A. Nature 236: 395-397, 1972.

Tarrant, K.R., and J.O.G. Tatton. Nature 219: 725-727, 1968.

18. United States Geological Survey. Water Resources Data for Michigan. Part 1. Surface Water Records, 1974.

19. United States Geological Survey. Water Resources Data for Wisconsin. Part 1. Surface Water Records, 1974.

20. United States Geological Survey. Water Resources Data for Illinois. Part 1. Surface Water Records, 1974.

21. United States Geological Survey. Water Resources Data for Indiana. Part 1. Surface Water Records, 1974.

22. Ruttner, F., Fundamentals of Limnology. University of Toronto Press., 1952.

23. Saylor, J.H., and P.W. Sloss. Water Volume Transport and Oscillatory Current Flow through the Straits of Mackinac. (Contribution No. 38, Great Lakes Environmental Research Laboratory)., 1975.

24. Hutzinger, O., S. Safe, and V. Zikto. "The Chemistry of PCBs." CRC Press, Cleveland, Ohio, 1974.

25. Kennard, E.H., "Kinetic Theory of Gases", McGraw-Hill, N.Y., 1938.

Langmuir, "Phenomena, Atoms and Molecules", Philosophical Library, N.Y. Chapt. 15., 1950.

26. Mackay, D., and A.W. Wolkoff. Environmental Science and Technology 7(7): 611-614, 1973.

27. Haque, R., and D.W. Schmedding. Bulletin of Environmental Contamination and Toxicology 14: 13-18, 1975.

Haque, R., D.W. Schmedding, and V.H. Freed. Environmental Science and Technology 8(2): 139-142, 1974.

Wallnöfer, P.R. , M. Koniger, and O. Hutzinger. Analabs, Inc. Research Notes 13(3): 14-16, 1973.

28. Duce, R.A., J.G. Quinn, C.E. Olney, S.R. Piotrowicz, B.J. Ray, and T.L. Wade. Science 176(4031): 161-163, 1972.

29. Södergren, A., Nature 236: 395-397, 1972.

Risebrough, R.W., et al; Nature (12/14), 1098-1102, 1968.

Harvey, G.R., et al; J. Marine Research 32(2): 103-118, 1974.

Harvey, G.R., and W.G. Steinhauer, Atmospheric Environment, 8(8): 777-782, 1974.

30. Peel, D.A., Nature 254(3/27): 324-325, 1975.

APPENDIX E

BACKGROUND DATA USED TO CONSTRUCT
THE MODEL FOR PCBs IN LAKE MICHIGAN

Table E-1

Concentration of PCBs in Sediments
Along the Southwestern Shore of Lake Michigan (1970-1971)[1]

Sample Locations	PCBs (ppb)	
Along SW shore of lake;	13.09 A	15.24 B
sampling 1-3 mi. off-shore*	6.73 A	16.09 ?
(see Figure E-1).	11.81 ?	12.69 ?
	26.07 A	23.53 A
	87.89 A	17.53 A
	130.27 ?	36.7 ?
	26.61 B	58.81 A
	64.32 A	41.06 A
	3.72 A	132.61 A
	3.87 A	80.63 ?
	35.8 A	29.29 A
	8.31 A	13.34 A
	Total = 896.01	
	Ave. [PCB] = 37.3	

NOTE: Estimated location of sampling sites with respect to thermocline:
A - above thermocline
B - below thermocline
? - questionable

* Sampling sites are located in an area with several known STP discharges. Data were not available on PCB concentrations in these STP effluents; however, judging from PCB data for other area STPs, it is probable that these plants discharge PCBs, thereby producing higher concentrations in the adjacent sediments.

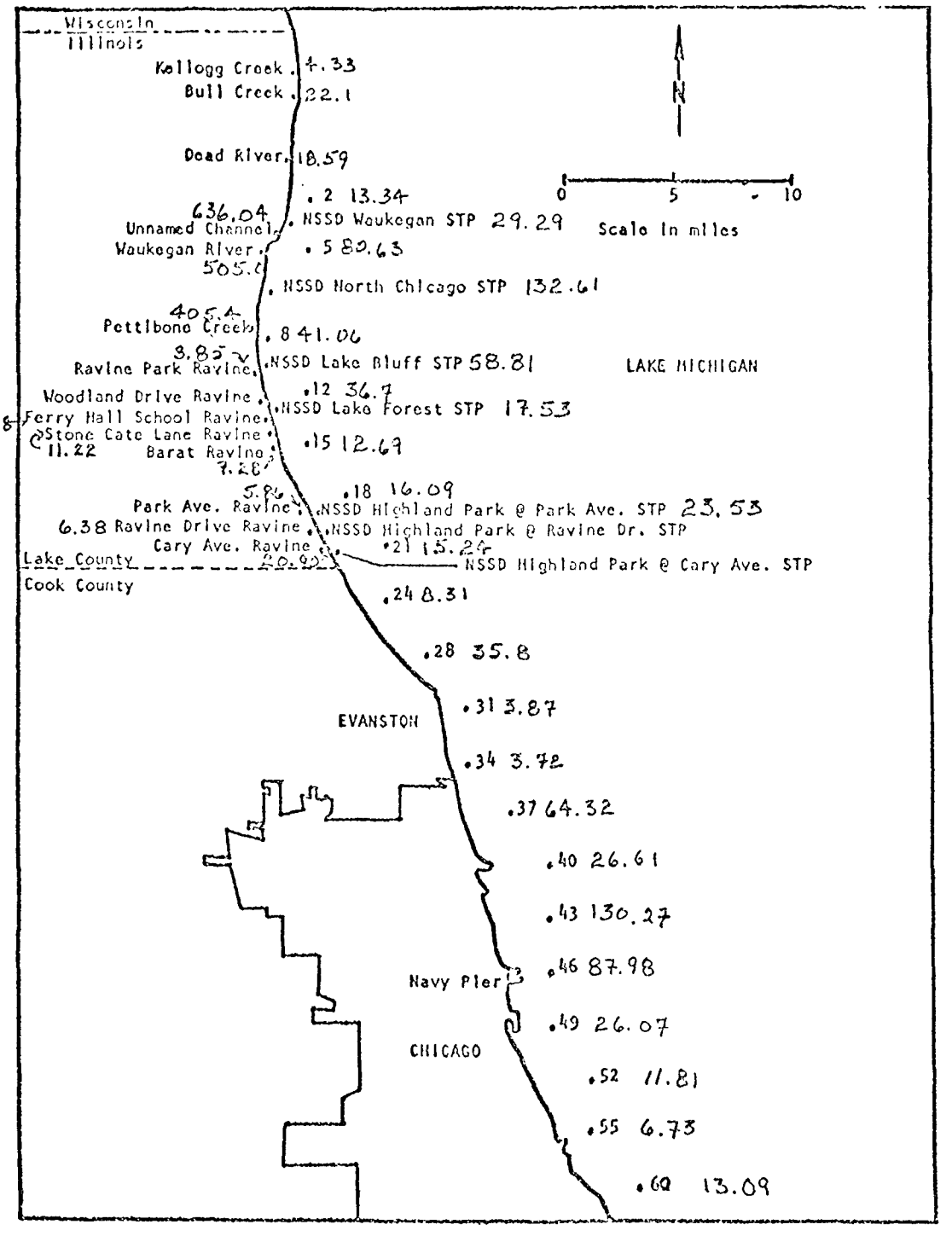

FIGURE E-1. LOCATIONS OF SEDIMENT SAMPLING STATIONS

PCBs in sediments of Lake Michigan & Tributary streams, ravines sediments.

Table E-2

Concentration of PCBs in Michigan Streams Tributary to Lake Michigan[2,3,4]

Stream	PCB (ppb; mean 1971-72)	Stream Discharge (1974) (CFS)	(MGD)	PCBs lb/day	lb/yr
St. Joseph	0.013	4,204	2,716	0.29	105.9
Kalamazoo	0.065	2,162	1,397	0.75	275.1
Grand	0.041	5,814	3,756	1.28	466.5
Muskegon	0.010	2,489	1,608	0.13	47.5
Manistee	0.014	2,047	1,322	0.15	54.8
Boardman	0.017	187	121	0.02	7.3
Elk	0.012	575	371	0.04	14.6
Portage	0.47*	18	12	0.045	16.5
TOTAL		17,478	11,291		988.2

*One-time measurement taken in 1972.

Table E-3

PCBs Entering Lake Michigan From Known Industrial and STP Discharges*

State	PCB Load (lb/yr)	Source
Michigan	217.2	STPs
Wisconsin	1170.1	Industries
Wisconsin	130.3	STPs
Indiana	122.3	STPs
Illinois	3.1	STPs
Total	1643	

*See Tables E-4 - E-9 for tabulations of the individual waste discharges.

TABLE E-4

Concentration of PCBs in Reported Michigan STP Effluents Tributary to Lake Michigan[1,2,3,4]

STP Location	Design Flow (MGD, 1974)	[PCB] (ppb, 1971-72)	PCB Load (lb/day)
Albion	4.0	0.44	0.015
Battle Creek	22.0	0.39	0.017
Benton Harbon, St. Joseph Plant	13.0	0.65	0.070
Menominee	1.2	0.35	0.004
Muskegon	10.0	0.28	0.023
Niles	10.0	0.68	0.056
Portage	3.6	1.9	0.057
East Lansing	8.5	0.5	0.035
Escanaba	2.2	0.29	0.005
Holland	4.5	0.6	0.022
Jackson	20.0	<0.1	
Kalamazoo	34.0	0.66	0.186
Lansing	34.0	0.18	0.051
Total	147.0*		0.595*

PCB Load = 0.595 lb/day = 217.2 lb/yr.

* Total does not include flows with [PCB] <0.1 ppb.

TABLE E-5

Concentration of PCBs in Reported Wisconsin Paper Plant Effluents Discharging to Green Bay (1974-75) (5)

Plant	Flow (mgd)	[PCB] (ppb)	PCB Load (lb/day)
Badger Paper Mills	4.78	<.1	-
Scott Paper			
Marinette	5.91	<.1	-
Oconto Falls	11.03	<.1	-
Shawano Paper	2.43	<.1	-
John Strange Paper	1.11	4.00	0.037
Bergstrom Paper	5.22	28.40	1.26
Kimberly Clark	4.30	0.28	0.010
Thilmany Paper	25.1	<.1	-
Fort Howard Paper			
Mill Effluent	7.3	2.60	0.158
Deinking	11.04	6.40	0.586
Deinking & Mill Effluent	18.1	7.07	1.06
American Can			
Sulfite Sewer	2.23	0.1	0.002
Paper Mill Lagoon	10.35	0.14	0.012
Chamin Paper	16.3	0.14	0.019
Green Bay Packaging	1.77	0.45	0.006
Total*	77.65		3.15

PCB load = 3.15 lb/day - 1,150 lb/yr.

* Total does not include flows with [PCB] <0.1 ppb.

TABLE E-6

Concentration of PCBs in Reported Wisconsin Miscellaneous Industrial Effluents Discharged to Lake Michigan[5]

Plant	Flow (mgd)	[PCB] (ppb)	PCB Load (lb/day)
Motor Casting Co.	0.22	<0.1	
Grey Iron Foundry, Inc.	0.339	<0.2	
Howmett, Corp. - Crucible Steel	0.796	<0.1	
Maynard Steel Casting Corp.	0.133	<0.1	
Milwaukee Solvay Coke Co.	4.3	<0.1	
Briggs & Stratton	1.523	<0.2	
Wehr Steel Co.	0.228	<0.1	
EST Co.	0.069	2.95	0.001
Milwaukee Die Casting Co.	0.012*	32.2	0.003
Meta-Mold Daton Malleable Inc.	0.033*	170.3	0.047
Babcock & Wilcox Co. Tubular Products Div.	0.6	0.9	0.004
Total**	0.714		0.055

PCB load - 0.055 lb/day = 20.1 lb/yr.

* Average of two readings.

** Total does not include flows with [PCB]<0.1 ppb.

TABLE E-7

Concentration of PCBs in Reported Wisconsin STP Effluents Discharged to Green Bay (1974-75) (5)

STP Location	Flow (mgd)	[PCB] (ppb)	PCB Load (lb/day)
Marinette	2.5	<0.1	
Portage	0.736	5.0	0.031
Oshkosh	8.49	0.1	0.007
Neenak-Menash	12.75	0.16	0.017
Appleton	11.05	0.12	0.011
Kaukauna	1.25	<0.1	
DePere	23.45	0.5	0.01
Green Bay	30.64	<0.1	
Kewaunee	0.315	0.18	0.001
Two Rivers	2.28	0.2	0.004
Manitowoc	9.3	<0.1	
Sheboygan	11.04	1.1	0.11
Port Washington	1.59	0.2	0.003
Milwaukee (South Shore)	66.7	0.29	0.160
Milwaukee (S. Milwaukee)	2.42	0.12	0.003
Racine	16.92	<0.1	
Kenosha	18.88	<0.1	
Total	119.8*		0.357*

PCB load = 0.357 lb/day = 130.3 lb/yr.

* Total does not include flows with [PCB]<0.1 ppb.

TABLE E-8

Concentration of PCBs in Reported Indiana STP Effluents Tributary to Lake Michigan (6)

STP Location	Flow (mgd)	[PCB] (ppb)	PCB Load (lb/day)
Michigan City	12.2	1.32	0.134
Valparaiso	4.0	0.24	0.008
Hobart	2.9	0.23	0.006
Hammond	42.6	<0.1	
East Chicago	18.7	0.1	0.016
Chestertown	1.6	<0.1	
Gary	50.5	0.38	0.159
South Bend	35.8	<0.1	
Mishawaka	10.39	0.13	0.011
Elkhart	17.5	<0.1	
Goshen	4.8	<0.1	
Nappanee	0.9	<0.1	
Kendallville	1.2	<0.1	
La Grange	0.185	<0.1	
Ligonier	0.434	<0.1	
Angola	0.784	0.17	0.001
Syracuse	0.305	0.13	0.0003
Total*	99.8		0.335

PCB load = 0.335 lb/day = 122.3 lb/yr.

* Total does not include flows with [PCB] <0.1 ppb.

TABLE E-9

Concentration of PCBs in Reported Illinois STP Effluents Discharging to Lake Michigan[1]

STP Location	Flow (mdg)*	[PCB] (ppb)**	PCB Load (lb/day)
N.S.S.D., Waukegan	0.002	2.635	.00004
N.S.S.D., North Chicago Plant	1.2	0.831	.0083
Total	1.202		0.00834

PCB Load = 8.34×10^{-3} lb/day = 3.04 lb/yr.

* Data for 1975

** Data for 1971

TABLE E-10

Lake Michigan Basin Hydrology[7,8,9,10,11]

Total mean river discharge (1974) of the 4 states (Michigan, Illinois, Wisconsin, and Indiana) into Lake Michigan = 34,508 cfs
= 1.1×10^{12} cf/yr

Total flow of water in the basin	= 9.4 billion gpd
Flow diverted from Lake to Chicago	= 2 billion gpd
Flow diverted through Straits of Mackinac	= 67,000 cfs
Other withdrawl's from the Lake	= 11.7 mgd

Volume of STP effluents entering Lake:

from Illinois	= 27.6 mgd
from Indiana	= 110.5 mgd
from Michigan	= 161.6 mgd
from Wisconsin	= 183.4 mgd

TABLE E-11

Estimates of Fish Biomass in Lake Michigan (1972-73) [12]

Michigan Waters of Lake Michigan	- 11.2×10^6 lb. of lake trout (age group II & older); 1972
Northern Lake Michigan	- 55×10^6 lb. of whitefish (age groups I-VI); 1972
From bottom trawls of the Lake	- 220×10^6 lb. of alewife (age groups I & over); 1973
	- 15×10^6 lb. of chubs (age groups I & over); 1973
Total (1972-73)	- 3×10^8 lb.

If midwater alewives are included, the total could be in the range of 2.3×10^9 lb.

Background Calculations Used to Construct the Model for PCBs in Lake Michigan

The concentration and total weight of PCBs in Lake Michigan at the present was calculated on the basis of PCB input to the lake from the following sources: 1) atmospheric fallout directly on the lake, 2) atmospheric fallout over the drainage basin of the lake, and 3) documented point source discharges from tributary industries and sewage treatment plants (STPs). The derived concentration in the water of 0.078 ppb PCB (or 8.4×10^5 lb.) represents the expected maximum amount of the chemical in the water, assuming a constant annual input PCBs over the past 40 years, and no loss of PCB from the lake.

A. Estimation of PCBs in the Lake Water Phase.

1. PCB load from atmospheric fallout directly on the lake surface:

   area of lake = 22,400 mi^2 = 5.8×10^{10} m^2 (13)

   Assume that the atmospheric fallout of PCBs has a constant annual rate of 50 $mg/m^2/yr.$, that PCBs are evenly distributed across the lake surface, and that the total accumulation over the past 40 years represents the present load;

   then the annual PCB fallout on the lake = $(50\ mg/m^2/yr)(5.8 \times 10^{10}\ m^2)$

   $= 2.9 \times 10^{12}\ \mu g/yr.$

   $= 6.4 \times 10^3$ lb/yr of PCB

   The total fallout on the lake after 40 yrs = 2.6×10^5 lb. of PCB.

2. PCB load from atmospheric fallout on the lake drainage basin:

   Assume that fallout (at a constant annual rate of 50 μg $PCB/m^2/yr$) over the basin contributes the majority of the PCBs to the lake via runoff, and that all of the PCBs falling on the drainage basin eventually enter the lake,

   then the annual PCB load = $(50\ \mu g/m^2/yr)$ (area of drainage basin)

   For the Michigan portion of the drainage basin -(7)

   PCB load = $(50\ \mu g/m^2/yr)(6.0 \times 10^{10}\ m^2) = 3 \times 10^{12}\ \mu g$ PCB/yr

   $= 6.6 \times 10^3$ lb PCB/yr

For the Wisconsin portion of the drainage basin -[8]

PCB load = $(50\ \mu g/m^2/yr)(3.7 \times 10^{10}\ m^2) = 1.9 \times 10^{12}\ \mu g$ PCB/yr

$= 4.1 \times 10^3$ lb PCB/yr

For the Illinois portion of the drainage basin -[9]

PCB load = $(50\ \mu g/m^2/yr)(8 \times 10^8\ m^2) = 4 \times 10^{10}\ \mu g$ PCB/yr

= 88.1 lb PCB/yr

For the Indiana portion of the drainage basin -[10]

PCB load = $(50\ \mu g/m^2/yr)(1.85 \times 10^8\ m^2) = 9.3 \times 10^9\ \mu g$ PCB/yr

= 20.4 lb PCB/yr

Total annual PCB fallout from all four sectors of the basin = 1.08×10^4 lb/yr and total fallout on the basin after 40 yrs = $(1.08 \times 10^4\ lb/yr)(40) = 4.3 \times 10^5$ lb PCB.

3. Total annual PCB load in the lake due to fallout = PCB load from drainage basin + PCB load from lake surface

$= 1.08 \times 10^4\ lb/yr + 0.64 \times 10^4\ lb/yr$

$= 1.7 \times 10^4$ lb PCB/yr

4. Total fallout load of PCB after 40 years = $(1.7 \times 10^4\ lb/yr)(40\ yrs) = 6.9 \times 10^5$ lb PCB

5. PCB load entering the lake via tributary stream discharges:

Assume that the concentration of PCBs in the streams has remained constant over the past 40 years, with an annual PCB load equivalent to that in the most recently recorded data.

Data on PCB concentrations are available only for eight tributary streams from the state of Michigan (see Table 2). PCB measurements along the St. Joseph, Kalamazoo, Grand, Muskegon, Manistee, Boardman, Elk, and Portage Rivers indicate a total of 988.2 lb PCB/yr.[2,3,4]

6. PCB load entering the lake from reported industrial and STP discharges:

Assume that the concentration of PCBs in the industrial and STP effluents has remained constant over the past 40 years, with an annual PCB load equivalent to that in the most recently recorded data, and that all the PCBs in the discharges eventually enter the lake.

The annual PCB load from the four tributary states is as follows: (see Tables 4-9):[2,3,4]

Michigan	- 217.2 lb PCB/yr	(from STPs)
Wisconsin	- 1150.0 lb PCB/yr	(from paper plant effluents)
	- 130.0 lb PCB/yr	(from STPs)
	- 20.1 lb PCB/yr	(from misc. industry)
Indiana	- 123.3 lb PCB/yr	(from STPs)
Indiana	- 3.1 lb PCB/yr	(from STPs)
TOTAL	- 1644.0 lb PCB/yr = 1.6×10^3 lb/yr	

7. The total PCB load in the water phase from all the above sources (i.e., fallout, industry, STPs, Michigan streams) = 1.98×10^4 lb/yr. = 7.9×10^5 lb PCB after 40 years of constant accumulation at this annual rate.

8. Concentration of PCBs in the lake water phase:

Calculation based on the lake water volume = 4.91×10^{15} l.

Annual concentration of PCBs =

$$\frac{(1.98 \times 10^4 \text{ lb PCB/yr})(454 \times 10^6 \ \mu g/lg)}{4.9 \times 10^{15} \text{ l}} = 0.002 \text{ ppb/yr}$$

Total maximum concentration of PCBs at present (after 40 years of constant accumulation) =

$$\frac{(7.9 \times 10^5 \text{ lb PCB})(454 \times 10^6 \ \mu g/lb)}{4.91 \times 10^{15} \text{ l}} = 0.073 \text{ ppb PCB}$$

9. The above calculations estimate PCB fallout over the drainage basin based on the size of the drainage areas as computed from USGS stream flow data, and totaling 9.8×10^{10} m^2. These data were obtained from flow gaging stations, which were not all located at the mouths of the tributary streams; therefore, the calculated size of the drainage basin may be underestimated.

As an alternative to the above, the same calculations were performed, but using a value of 1.76×10^{11} m^2 for the area of the drainage basin (this area was estimated by the Lake Michigan Federation.[13]

Then, the annual PCB fallout over the basin =

$$\frac{(50\ \mu g\ PCB/m^2/yr)(1.76 \times 10^{11}\ m^2)}{454 \times 10^6}$$

$$= 1.9 \times 10^4\ lb\ PCB/yr.$$

After 40 years of constant accumulation at this rate, PCB load =

$$7.6 \times 10^5\ lb\ PCB\ (from\ fallout)$$

For this larger basin, the total PCBs in the water phase (i.e. fallout + industrial & STP discharges)

$$= 1.9 \times 10^4\ lb/yr + 0.16 \times 10^4\ lb/yr$$
$$= 2.1 \times 10^4\ lb/yr\ of\ PCB$$

After 40 years of constant accumulation at this rate, the PCB load would be 8.4×10^5 lb.

The PCB concentration in the water phase is:

$$\text{on an annual basis} = \frac{(2.1 \times 10^4)(454 \times 10^6)}{4.91 \times 10^{15}\ l} = 0.002\ ppb$$

After 40 years of constant accumulation at this rate =

$$\frac{(8.4 \times 10^5)(454 \times 10^6)}{4.91 \times 10^{15}\ l} = 0.078\ ppb$$

B. Estimates of PCB Transport in Lake Ontario, with Application to Lake Michigan.

Sufficient data were not available for Lake Michigan to determine the relationship of PCB concentrations between the water, sediment, and biotic phases. Adequate data were available to determine this relationship for Lake Ontario, and due to the similarities between the two lakes, the calculations were then used to estimate the present situation in Lake Michigan.

1. Sampling of Lake Ontario, conducted in 1972 at several near-shore and mid-lake sites, indicated the following:[14,15]

   PCB in fish (alewives, smelt, slimy sculpin) = $2.35 - 5.13 \times 10^6$ ppt.
   PCB in water (total concentration dissolved + particulate) = 55 ppt.
   Average PCB in sediments = 1.2×10^5 ppt.
   Average PCB in net plankton = 7.2×10^6 ppt.
   Average PCB in benthos = 4.71×10^5 ppt.

   It was assumed that these concentrations are the result of PCB accumulations at a constant rate for the past 40 years.

2. Determination of the rate of PCB deposition in the sediments:

   The average sedimentation rate of Lake Ontario is 1.2 mm/yr (as compared to a rate of 1.0 mm/yr for Lake Michigan.

   Therefore, the thickness of sediment today in Lake Ontario, after 40 years of deposition = 48 mm.

   At this constant rate of deposition, PCBs accumulate in the sediments at a rate = $\frac{1.2 \times 10^5 \text{ ppt PCB/40 yrs}}{48 \text{ mm sediment/40 yrs}} = 2.5 \times 10^3$ ppt PCB/mm of sediment

   $= 3 \times 10^3$ ppt PCB/yr.

3. Annual accumulation of PCBs in the biota =

$$\frac{PCB_{fish} + PCB_{Plankton} + PCB_{benths}}{(3)(40 \text{ yrs})}$$

$$= \frac{(5.13 \times 10^6 \text{ ppt}) + (7.2 \times 10^6 \text{ ppt}) + (.471 \times 10^6 \text{ ppt})}{(3)(40 \text{ yrs})}$$

$$= 0.11 \times 10^6 \text{ ppt/yr.}$$

4. Annual accumulation of PCBs in the water = $\frac{55 \text{ ppt}}{40 \text{ yrs}}$ = 1.38 ppt/yr.

5. Concentration ratios of PCBs in the three phases are:

$$\frac{[PCB_{sed.}]}{[PCB_{water}]} = \frac{3 \times 10^3 \text{ ppt/yr}}{1.38 \text{ ppt/yr}} = 2.2 \times 10^3$$

$$\frac{[PCB_{biota}]}{[PCB_{sed.}]} = \frac{0.11 \times 10^6 \text{ ppt/yr}}{3.0 \times 10^3 \text{ ppt/yr}} = 36$$

$$\frac{[PCB_{biota}]}{[PCB_{water}]} = \frac{0.11 \times 10^6 \text{ ppt/yr}}{1.38 \text{ ppt/yr}} = 8 \times 10^4$$

Therefore,

$$\begin{tikzcd} {[PCB_{water}]} \arrow[r, "2.2 \times 10^3"] \arrow[rr, bend left, "8 \times 10^4"] & {[PCB_{sed}]} \arrow[r, shift left, "36"] & {[PCB_{biota}]} \arrow[l, shift left, "2.8 \times 10^{-2}"] \end{tikzcd}$$

6. Applying these ratios to Lake Michigan:

$$[PCB_{biota}] = [PCB_{water}](8 \times 10^4)$$
$$= (.078 \text{ ppb})(8 \times 10^4)$$
$$= 6.24 \text{ ppm}$$

$$[PCB_{sed.}] = [PCB_{water}](2.2 \times 10^3)$$
$$= (.078 \text{ ppb})(2.2 \times 10^3)$$
$$= 0.172 \text{ ppm}$$

C. <u>Estimates of Plankton Biomass in Lake Michigan:</u>

1. Assume a density of 300 kg. plankton/hectare of lake[16]
   Area of lake = 22,400 mi.^{2} = 5.8×10^6 hectare
   Therefore, plankton biomass = $(5.8 \times 10^6)(300 \text{ kg}) = 1.74 \times 10^{12}$g.
   $= 3.8 \times 10^9$ lb.

D. Estimate of Flow of PCBs Through the Straits of Mackinac:

1. Water flows out of the lake via Straits at a rate = 67,000 cfs.
$= 1.3 \times 10^{14}$ lb of water/yr.

Using the concentration of PCB in the water as 0.013ppb,[17] the loss of PCBs through the Straits is: $= (1.3 \times 10^{14}$ lb/yr)(0.013 ppb)
$= 1.7 \times 10^{3}$ lb PCB/yr.

Assuming a constant loss over the past 40 years, 6.8×10^{4} lb of PCB would have been lost through the Straits.

BIBLIOGRAPHY

1. Schacht, R.A.; Pesticides in the Illinois Waters of Lake Michigan, Project #16050 ESP., 1974.

2. State of Michigan Water Resources Commission, Bureau of Water Management, Polychlorinated Biphenyl Survey of the Kalamazoo River and Portage Creek in the Vicinity of the City of Kalamazoo 1972.

3. Hesse, J.L.; Status Report on Polychlorinated Biphenyls in Michigan Waters. Report to Michigan Water Resources Commission, 1973.

4. State of Michigan Water Resources Commission, Bureau of Water Management, Monitoring for Polychlorinated Biphenyls in the Aquatic Environment. Report to Lake Michigan Toxic Substances Committee, May, 1973.

5. Kleinert, Stan; Chief of Water Quality Surveillance Section, DNR Wisconsin, Personal Communication, 1975.

6. Winters, John; Acting Chief of Water Quality and Standards Branch of Illinois EPA, Personal Communication, 1975.

7. United States Geological Survey, Water Resources Data for Michigan. Part 1. Surface Water Records, 1974.

8. United States Geological Survey, Water Resources Data for Wisconsin. Part 1. Surface Water Records, 1974.

9. United States Geological Survey, Water Resources Data for Illinois. Part 1. Surface Water Records, 1974.

10. United States Geological Survey, Water Resources Data for Indiana. Part 1. Surface Water Records, 1974.

11. Saylor, J.H., P.W. Sloss; Water Volume Transport and Oscillatory Current Flow through the Straits of Mackinac. (Contribution No. 38, Great Lakes Environmental Research Laboratory), 1957.

12. Michigan Department of Natural Resources Fisheries Division, Estimates of Biomass of Principal Fish Species in the Great Lakes (first report). Fisheries Research Report No. 1813, 1974.

13. The Lake Michigan Federation, "The Lake Michigan Basin", March, 1975.

14. International Joint Commission on the Great Lakes. Pollution of Lake Erie, Lake Ontario and the International Section of the St. Lawrence River, Vol 3, 1969.

15. Haile, C.L., G.D. Veith, G.F. Lee, W.C. Boyle; Chlorinated Hydrocarbons in the Lake Ontario Ecosystem, 1975.

16. Ruttner, F., 1952. Fundamentals of Limnology. University of Toronto Press. 295 p., 1952.

17. Nealy, Brock; Chemist with Dow Chemical Co., Midland, Michigan. Personal Communication, 1975.

APPENDIX F

TOXICOLOGICAL ASPECTS

1.0 TOXICOLOGICAL ASPECTS OF POLYCHLORINATED BIPHENYLS (PCBs)

1.1 Introduction

A critical biological effect of polychlorinated biphenyls (PCBs) is the induction of tumors in mice and rats, which implies potential human activity. Cancer is typically progressive and irreversible, in the absence of medical intervention. Virtually all chemicals known to cause cancer in man have been shown to cause tumors in animals, including mice and rats. The use of experimental animals to test chemicals is generally accepted as a reliable basis for estimating potential carcinogencity to humans. Pathological development of chemically induced tumors in experimental animals and in humans is very similar, and most of the major types of human cancer can be reproduced in animals by chemical induction. Mice and rats are generally the preferred experimental animals because their relatively short lifespan permits lifetime testing within two to three years, whereas chemical carcinogenesis in humans is usually manifested by a latent period of 30 to 40 years between exposure and the appearance of symptoms. This long latency period coupled with the lack of adequate human data, and the lack of identifiable control groups for widespread agents such as PCBs, make it difficult to identify PCBs as a "human" carcinogen by conventional epidemiological studies. However, most experts in chemical carcinogenesis, including researchers at the National Cancer Institute of NIH and the World Health Organization, accept animal data as predictive of potential human activity.

To date, no minimum effective dose or maximum safe dose has been established for carcinogenic chemicals in man or animals; therefore in approaching the problem of formulating regulatory action all mammalian systems are considered sensitive and man must be considered the target system.

Although in at least one positive study on PCBs the dosage level used would be considered low, high levels are generally used in animal tests because the limited number of animals may render the tests relatively inconclusive. In addition, the strain or species used may also render the tests comparatively insensitive. Failure to demonstrate response at low doses of an oncogen is not an adequate basis to establish a "no-effect" level.

Virtually no chemical that has been adequately studied is known to cause only benign tumors. Furthermore, oncogens may cause tumors at different sites in different animals species or strains depending upon factors such as routes of metabolism and excretion.

In considering the current status of medical knowledge, a lack of understanding of the carcinogenic mechanism within cellular biochemistry is evident. One issue that must be resolved in order to establish effective control legislation is whether or not there is a level of carcinogenic exposure below which there are no effects.

The two points of view are known as the "threshold" and the "no-threshold" concepts. The threshold concept is based on the theory that there is a dose level below which no effect will occur regardless of the number of test animals exposed; since this no-effect dose level would be higher than any resultant legally-established exposure limit, humans would not be harmed by doses at or below the limit. The assumption is made that the number of animals affected will decrease at a greater rate than the rate of decrease in the dose until a zero-point is reached. This assumption is unverified. Proponents of the threshold concept believe that for every toxic chemical there is an exposure level below which no effect can occur in a given organism, and that no effect, or possibly even beneficial effects at subthreshold doses, gives way to undesirable effects as the dose is raised. No valid data have been developed to support the concept of safe levels of exposure to carcinogens since the extremely large numbers of animals needed for such experiments preclude such testing, and extrapolation of animal data to man is tenuous.

The no-threshold proponents insist that any substance which is carcinogenic at any level must be regarded as such at all levels. They further insist that it is not possible to predict safe levels of carcinogens based on an arbitrary fraction of the lowest effective animal dose, regardless of how many test animals are used. For those chemicals which have been shown to be carcinogens in experimental animals, no thresholds have been demonstrated. Thus neither the no-threshold theory (or zero-dose concept) nor the threshold concept can be demonstrated or disproved at the present time.

In the development of a standard for a carcinogen, the following recommendations, taken from the April 22, 1970 report to the Surgeon General by the Ad Hoc Committee on the Evaluation of Low Levels of Environmental Chemical Carcinogens, National Institutes of Health, should be considered:

1. No level of exposure to a chemical carcinogen should be considered toxicologically insignificant for man. For carcinogenic agents, a 'safe level for man' cannot be established by application of our present knowledge. The concept of 'socially acceptable risk' represents a more realistic notion.

2. The principle of a zero tolerance for carcinogenic exposures should be retained in all areas of legislation presently covered by it and should be extended to cover other exposures as well. Only in the cases where contamination of an environmental source by a carcinogen has been proven to be unavoidable should exception be made to the principle of zero tolerance. Exceptions should be made only after the most extraordinary justification, including extensive documentation of chemical and biological analyses and a specific statement of the estimated risk for man, are presented. All efforts should be made to reduce the level of contamination to the minimum. Periodic review of the degree of contamination and the estimated risk should be made mandatory.

3. A basic distinction should be made between intentional and unintentional exposures.

   (a) No substance developed primarily for uses involving exposure to man should be allowed for wide-spread human intake without having been properly tested for carcinogenicity and found negative.

(b) Any substance developed for use not primarily involving exposure in man but nevertheless resulting in such exposure, if found to be carcinogenic, should be either prevented from entering the environment or, if it already exists in the environment, progressively eliminated.

The same report states:

> The production of specific carcinogenic chemicals for uses that do not primarily involve an intentional exposure of man, but which result in such environmental contamination that extensive human exposure becomes inevitable, must also be controlled. The most effective prevention of exposure in man is the elimination of carcinogen production, or control of entry into the environment.

More recently, the Subcommittee on Estimation of Risks of Irreversible, Delayed Toxicity to the Department of Health, Education and Welfare Committee to Coordinate Toxicology and Related Programs published their report (Hoel et al, J. Toxicol. Environ. Health 1, 133, 1975).

> The Subcommittee suggests (on an interim basis only) a computational procedure to assist in setting levels of qualitatively unavoidable chemicals (both natural and manmade) in the environment compatible with a socially acceptable level of risk. It includes a simple arithmetic procedure to compute an exposure dose of a chemical for humans so that there will be a high probability that this dose will give a risk equal to or below the specified level.
>
> Data from experiments designed to detect irreversible self-replicating changes (carcinogenesis) in experimental animals will be used. Through this arithmetic, the results will be translated to appropriately low levels for humans. In

addition, human exposure data need to be considered. All the knowledge necessary to evaluate these factors does not yet exist. We suggest here an interim procedure to be used until research points to better procedures such as methods for obtaining direct or best estimates of risk at a given dose with their corresponding confidence limits. Some of this research is now under way. These suggestions must be reviewed as new research is available, but not longer than within two years.

Specifically, the so-called linear straight-line arithmetic method combined with a 99% confidence level for extrapolation to very low levels works this way:*

1. Say an experiment at a dose, d, using 100 animals has shown no induced tumors, for example, in the animals, that is, 0/100=0%.

2. The upper 99% confidence limit on this result (which can be found in standard statistical tables) is 0.045, that is, 4.5%.

3. For a dose, d_s, that will produce, as an upper limit, fewer than 1 in 1,000,000 tumors, divide 1/1,000,000 by .045. This gives (in standard notation) $2.22 \times 10^{-5} d$ as the appropriate dose. If one were to aim for fewer

---

* For certain compounds, some knowledge of the carcinogenicity process may be available, such as with renal concretions resulting in bladder tumors. In these instances, models other than the linear model may be more appropriate.

For illustration we consider only the case of one experimental dose. In practice, however, it is expected that several dose levels will be available and their treatment can be found in the literature (Gross et al., 1970; Mantel and Bryan, 1961; Mantel et al., 1975).

than 1 in 100,000,000, (i.e., 1×10^{-8}), the appropriate dose would be $2.22 \times 10^{-7} d$; for fewer than 1 in a hundred thousand (1×10^{-5}), the appropriate dose is $2.22 \times 10^{-4} d$, etc. If 10 of the 100 animals showed a response (i.e., 10/100 = 10%), then the 99% confidence limit is 0.19, that is, 19%. The appropriate dose for 1 in a million is then $5.3 \times 10^{-6} d$ and for 1 in 100,000,000, the dose would be $5.3 \times 10^{-8} d$.

For corrections to a 'natural' incidence, the normal distribution is used to approximate a 99% confidence interval on the difference between the response at dose d and the background. Suppose at dose d 60 of 200 (30%) animals were affected while the natural incidence gave 20 of 200 animals (10%). The upper 99% confidence limit is then approximately

$$.3 - .1 + 2.327[.3(.7)/200 + .1(.9)/200]^{1/2} = 0.29$$

where 2.327 is the 99% point of the standard normal distribution. For a dose, d_s, that will produce as an upper limit of fewer than 1 in a million changes in excess of the natural incidence, 1/1,000,000 is divided by 0.29. This gives $3.4 \times 10^{-6} d$ as the dose, and for 1 in 100,000,000 excess changes the dose is $3.4 \times 10^{-8} d$.

Two questions need to be answered in converting results in animals to man:

1. In what units should the dose conversion be made (i.e., weight basis, surface basis, etc.)? At present it appears that the appropriate dose unit is the 'surface' unit, that is, use the 2/3 power of the weight of the two species (test animal-man) as the surface area conversion factor. For example, if a 25-g mouse receives a dose stated on a milligram basis, then the corres-

ponding dose (mg) for a 70-kg man would be $(70\ kg/25g)^{2/3} = 200$ times the mouse dose. Thus, on a mg/kg basis, the use of surface units would require that the corresponding relative dose become $(70\ kg/25\ g)^{1/3} = 14$ times the mouse dose. Dose expressed in concentration (ppm) should lead to approximately the same levels as dose expressed in surface area units.

2. Should any additional safety factor be added in going from animals to man? Yes, but not the same factor for all substances. This species conversion factor should be determined substance-by-substance using appropriate biological considerations (and allowing for any safety factors implicit in other parts of the calculation).

A statutory provision exists, however, which provides some sanction to the no-threshold concept. This is, of course, the "Delaney clause", Section 409(c) (3) (A) of the Federal Food, Drug, and Cosmetic Act (21 U.S.C. 321 et seq.), which became law in 1958. This clause provides "... that no additive shall be deemed to be safe if it is found to induce cancer when ingested by man or animal, or if it is found, after tests which are appropriate for the evaulation of the safety of food and additives, to induce cancer in man or animal..."

In spite of all of the furor concerning this clause, it is interesting to note that since its introduction in 1958, it has been invoked only twice to ban food additives and both of these were trivial components of food packaging.

The Food and Drug Administration, in addition to its responsibility for regulating food additives, is also supposed to protect the public from carcinogens which appear naturally or incidentally in our food. These substances are not covered by the Delaney clause. Aflatoxins, DDT, aldrin, nitrosamines, and vinyl chloride are examples. Presently, these problems are handled on the basis of practicality and not on any assessment of risk. That PCBs presently exist in our diet has been amply demonstrated. But the pressure to eliminate such carcinogens from entering our food must fall upon other regulator agencies such as EPA.

In summary, there is no generally accepted toxicological basis upon which to establish a no-effect level for any carcinogenic material. Methods which arrive at estimates of acceptable exposure levels for carcinogens in man are, therefore, based on the concept of a "socially acceptable level of risk." In general, the methods employ statistical extrapolation of laboratory animal test data to man, whereupon a political decision as to the socially acceptable incidence of tumors is made. Such estimates of socially acceptable level of risk to determine human exposure tolerances to ionizing radiation have been employed by the Atomic Energy Commission and adopted by the Environmental Protection Agency. Estimates based on acceptable level of risk are only conceptual and must not be taken as calculated no-effect levels.

1.2 Mammalian Toxicity

The current knowledge of the interaction of PCBs with life forms will not be reviewed in detail in this report; an exhaustive review will be submitted in the final report on Task I. This report will highlight only those data relating tumor induction. This review, however, is complete in the sense that major adverse effects are mentioned including those within the major target organs.

PCBs have low acute toxicity. But because of their near complete absorption, high lipid (fat) solubility, low water solubility, and relative chemical inertness, PCBs tend to concentrate in the food chain, accumulate in body fat, persist in biological tissue, and show persistent toxicity. Consequently, short-term studies are not adequate indicators of the long-term effects of PCB exposure. Latent effects, those effects that occur some time after exposure has ceased, and cumulative effects, those effects that occur only after a threshold level of PCB or tissue damage has been reached, may be easily missed over the short term. Since most toxicity studies with PCBs have been short-term, there is limited scientific evidence establishing or predicting the chronic effects.

1.2.1 Subacute and Chronic Toxicity

"No-effect" levels of PCBs in rats and dogs fed three Aroclors for two years were reported by Monsanto in 1971. A summary of their results is presented here.

Rats - Method

A two-year chronic toxicity study was conducted using rats fed diets containing Aroclors 1242, 1254 and 1260. The animals employed in the test were Charles River strain albino rats. Four hundred rats (200 male and 200 female) were selected for each of the experiments.

Outline of Each Experiment

Group	Number of Animals		Dietary Level (ppm)
	Male	Female	
Control	50	50	None Administered
T-I	50	50	1
T-II	50	50	10
T-III	50	50	100

Rat Results - Aroclor 1242

At sacrifice after 3, 6 or 12 months on test, organ weights, organ to body weight and organ to brain weight ratios disclosed several randomly occurring intergroup differences. The lack of any consistent dose-related response and the absence of any deleterious tissue changes confirm that these differences were not related to the ingestion of Aroclor 1242.

At the final sacrifice after 24 months on test, the liver weights and liver to body weight or brain weight ratios were significantly elevated in females from the T-III group. Histologic examination of the livers from the T-III group revealed several animals with vacuolar changes indicative of fatty degeneration. Specific fat stains confirmed the presence of fat in these vacuoles. Focal hypertrophy and focal hyperplasia were also found in the livers from animals fed Aroclor 1242.

Hyperplasia of the urinary bladder was found in animals from the control group and from each of the test groups. This hyperplasia was usually associated with cystitis.

The incidences and types of all tumors were about the same in all groups, including the control group, and are considered normal for rats of this age.

Rat Results - Aroclor 1254

At sacrifice after 3, 6, or 12 months on test, organ weights, organ to body weight and organ to brain weight ratios disclosed several randomly occurring intergroup differences. The lack of any consistent dose related response and the absence of any deleterious tissue changes confirm that these differences were not related to the ingestion of Aroclor 1254.

At the final sacrifice after 24 months on test, the absolute liver weight and liver to body weight or brain weight ratios were significantly elevated in both T-III males and females. Histologic examinations of the livers from the T-III group revealed several animals with vacuolar changes indicative of fatty degeneration. Specific fat stains confirmed the presence of fat in these vacuoles. Focal hypertrophy and focal hyperplasia were also found in the livers from animals fed Aroclor 1254.

Hyperplasia of the urinary bladder was found in animals from the control group and from each of the test groups. This hyperplasia was usually associated with cystitis.

None of the tumors found could be related to the ingestion of Aroclor 1254 and are considered normal for a random population of rats this age.

Rat Results - Aroclor 1260

At sacrifice after 3, 6, or 12 months on test organ weights, organ to body weight and organ to brain weight ratios disclosed several randomly occurring intergroup differences. The lack of any consistent dose related response and the absence of any deleterious tissue change confirm that these differences were not related to the ingestion of Aroclor 1260.

At the final sacrifice after 24 months on test, the liver weights and liver to body weight or brain weight ratios were significantly elevated in the rats from the T-III group. Histologic examination of the livers from the T-III

group revealed several animals also with vacuolar changes indicative of fatty degeneration. Specific fat stains confirmed the presence of fat in these vacuoles. Focal hypertrophy and focal hyperplasia were also found in the livers from animals fed Aroclor 1260.

Hyperplasia of the urinary bladder was found in an animal from the control group but not in any of the test animals.

The incidences and types of all tumors were about the same in all groups, including the control group, and are considered normal for rats of this age.

Dogs - Method

The two-year toxicity study utilized an untreated control group and three test groups, each consisting of eight purebred beagle dogs (four males and four females). The beagles were all eligible for A.K.C. registration and had been previously immunized.

The material to be tested, Aroclors 1242, 1254,aand 1260 were incorporated into a stock diet and fed to the dogs seven days a week in three graded dietary levels. The levels were 1, 10 and 100 ppm.

An outline of the test organization is presented here:

Outline of Each Experiment

Group	Number of Animals		Dietary Level (ppm)
	Males	Females	
UC	4	4	None
I	4	4	1
II	4	4	10
III	4	4	100

Dog Results - Aroclor 1242, 1254 and 1260

No significant abnormalities were observed in the following parameters:

Body Weight
Food Consumption
Behavioral Reactions
Hematology
Urine

Animals receiving 100 ppm of Aroclor 1260 exhibited increases in serum alkaline phosphatase activity at the conclusion of the investigation.

A female receiving 100 ppm of Aroclor 1242 was sacrificed in extremis after 60 weeks of testing; gross and histologic examinations revealed severe chronic peritonitis. A male receiving 10 ppm died after 32 weeks of testing; death was attributed to chronic pneumonia. Histologic examination revealed no abnormalities related to the test material ingestion.

Two fatalities occurred during the Aroclor 1254 study: a 100 ppm female after 33 weeks of testing and a 10 ppm female after 37 weeks. The female receiving 100 ppm died from injuries received in a fight. Gross and histologic examinations of the 10 ppm female revealed chronic peritonitis.

Two fatalities occurred during the Aroclor 1260 study: a 100 ppm female after 29 weeks and a 100 ppm male after 33 weeks. Gross and histologic examinations revealed severe chronic peritonitis in the female and acute pneumonia in the male.

All animals receiving 100 ppm of Aroclor 1260 exhibited elevations in liver to body weight ratios.

Gross and histologic examination of all remaining animals revealed no significant abnormalities.

Work by Dr. James Allen (U. of Wisconsin) on simians is discussed in the following paragraphs.

Simians - Method

The hazards to simians of low level PCB exposure have been demonstrated only very recently. Allen in 1974 reported the results of feeding

six adult female rhesus monkeys a diet containing 25 ppm of Aroclor 1248 for two months. The average total intake of PCBs for five animals fed for two months was approximately 250 mg, or 0.78 mg/kg body weight per day. The sixth monkey consumed a total of 450 mg at 1.34 mg/kg/day; this animal died 68 days after feeding was stopped.

The effects in all six animals included facial swelling, severe hyperplastic gastritis and liver necrosis. All but one of the surviving were unable to conceive. The one live birth was a smaller than average infant.

The surviving monkeys continued to have high adipose tissue levels, acne, tissue swelling and hair loss two years after this short term, low level exposure. As will be seen, these signs were similar to those encountered in humans during the "Yusho" intoxication in Japan (described later in this report).

1.2.2 Reproduction

PCBs have been shown to affect reproduction in several different species. Egg production, egg hatchability, and shell thickness were decreased by feeding low levels of various PCB formulations to chickens. Female rats fed 20 ppm of Aroclor 1254 (1.5 mg/kg/day) had a decrease in the number of litters and in litter size. In a two-generation study, 5 ppm was the no effect level for rat reproduction. Higher dietary levels caused decreased rat offspring survival and decreased mating performance. Even at 1 ppm, male rats were born with enlarged livers. In a more recent study, Allen has reported that levels in the diet as low as 2.5 ppm resulted in a marked decrease in the ability of monkeys to conceive.

1.2.3 Pathology

One of the most studied toxic effects of PCBs has been in liver pathology in rats and rabbits. PCBs cause similar damage when administered by injection, inhalation, or by mouth. In cases of PCB poisoning, early liver damage has been noted. Many researchers have described the now classical pathological changes in the liver of animals exposed to PCBs. These include infiltration by fat, increased cell and liver size, degeneration of cellular contents, and ultimately cell death. The latent nature of these effects is demonstrated by the fact the most severe histopathology known occurred 5 to 13 weeks after PCB ingestion had ceased.

Additional pathological changes have recently been noted. These were classified as adenofibrosis and are often seen in association with liver carcinoma. Abnormal growth and development of the gastric mucosa has also been reported and is further evidence of the carcinogenic potential of PCBs.

For reasons completely independent of any possible association with cancer, the significance of fibrosis, adenofibrosis, and liver necrosis are very grave. These lesions may be associated with carcinomas in rodent liver.

1.2.4 Carcinogenicity

Unfortunately, statistically sound dose-carcinogenic response studies necessary to treat many environmental problems, including PCBs, are currently not available. A review of the world scientific literature reveal only six studies pertinent to carcinogenesis. These are listed and discussed below.

1. Kimbrough, R.D., Linder, R.E., and Gaines, T.B., "Morphological Changes in Livers of Rats Fed Polychlorinated Biphenyls", Arch. Envon. Health 25, 354 (1972).

   An extensive chronic study of Sherman rats, using Aroclors 1260 and 1254, with dietary levels of 0, 20, 100, 500 and 1000 ppm, documented a variety of histopathological effects after 8 months of exposure. Degenerative liver changes observed in both male and female test animals at all dosages of both PCBs included hypertrophy of individual liver cells, hyperchromatic pleomorphic nuclei, cytoplasmic lipid vacuoles, and porphyria, all characteristics of chlorinated hydrocarbon (DDT, dieldrin) intoxication. In some cases, adenofibrosis (uncertain significance) was observed. All of the mortalities that occurred during exposure to the Aroclor 1260 were female. In nearly all gross

pathological examinations, males demonstrated enlarged livers, while females did not; liver effects of Aroclor 1254 were adjudged more pronounced than those of Aroclor 1260.

The short duration of this study is a drawback for its inclusion in evaluation of carcinogenic effects.

2. Kimura, N.T. and Baba, T., "Neoplastic Changes in the Rat Liver Induced by Polychlorinated Biphenyl", Gann 64, 105 (1973).

Following the observation, by electron microscopy, of specific morphological alterations (previously observed with other carcinogens) in liver cell nucleoli of animals ingesting PCBs, a preliminary study on PCB carcinogenic activity was instituted. Using rats of the Donry strain, Kanechlor 400 mixed in oil was fed at dietary levels ranging upwards from 38.5 ppm. Ten male and ten female rats were in the experimental group with five of each sex in the control group. Using body weight gains (compared to controls) the concentration of the Kanechlor was increased or decreased according to the following schedule.

	Period of Feeding (days)	Concentration of Kanechlor-400 (ppm)
	26	38.5
	57	77
	21	154
	21	308
	56	616
	39	462
	29	0
	98	462
	28	0
	82	462
Total	400	

Multiple adenomatous nodules were observed in all livers of the female experimental group ingesting more than 1200 mgs of Kanechlor 400. In sharp contrast, however, the liver specimens of the male experimental rats revealed no such changes even in animals receiving comparable or higher amounts of Kanechlor 400 than females. Although these authors refer to this lesion as benign in nature, further discussion of this lesion is presented later in this report.

The variable dosage schedule and the small numbers of animals used present drawbacks for its inclusion in evaluation of carcinogenic effects.

3. Ito, N., et al. "Histopathologic Studies on Liver Tumorigenesis Induced in Mice by Technical Polychlorinated Biphenyls and its Promoting Effect on Liver Tumors Induced by Benzene Hexachloride", J. Natl. Cancer Inst., 51, 1637 (1973).

This paper reports the histopathologic and ultrastructural observations of livers of dd mice fed PCBs in their diet for a period of 32 weeks. Twelve male mice were used at each of three dosage levels. Three PCBs were investigated, Kanechlor 500, 400, and 300. The results indicate hepatocellular carcinomas and nodular hyperplasia were induced by Kanechlor 500 but not by the two other PCBs, as seen below:

PCBs Diet (ppm)	Cellular Hypetrophy	Nodular Hyperplasia	Hepatocellular Carcinoma
Kanechlor 500 (500)	++	7/12	5/12
Kanechlor 500 (250)	+	0/12	0/12
Kanechlor 500 (100)	±	0/12	0/12
Kanechlor 400 (500)	++	0/12	0/12
Kanechlor 400 (250)	+	0/12	0/12
Kanechlor 400 (100)	±	0/12	0/12
Kanechlor 300 (500)	±	0/12	0/12
Kanechlor 300 (250)	±	0/12	0/12
Kanechlor 300 (100)	-	1/12	0/12
Control	-	0/6	0/6

The effect of PCBs on neoplastic changes induced by isomers of benzene hexachloride (α, β and γ) in the livers of mice fed a diet containing BHC with and without PCBs for 24 weeks was also studied. The authors concluded that in addition to the carcinogenic activity of PCBs, these materials, also promote tumors induced by α BHC and β BHC.

4. Kimbrough, R.D., and Linder, R.E., "Induction of Adenofibrosis and Hepatomas of the Liver in BALB/cj Mice by Polychlorinated Biphenyls (Aroclor 1254)", J. Natl. Cancer Inst., 53, 547 (1974).

Two groups of 50 BALB/cj inbred male mice were fed 300 ppm of Aroclor 1254 in the diet for 11 and 6 months. The six-months group was given a recovery period of 5 months. The results are presented below:

Dietary Level (ppm)	Exposure Time (Mo.)	Total Survivors	Hepatoma
0	0	34	0
0	0	24	0
300	11	22	9
300	6	24	1

In addition, all 22 mice in the group receiving Aroclor 1254 demonstrated adenofibrosis which was not observed in any other group.

5. Makiura, S., et al, "Inhibitory Effect of Polychlorinated Biphenyls on Liver Tumorigenesis in Rats Treated with 3'-Methyl-4-Dimethylaminoazobenzene, N-2-Fluorenylacetamide, and Diethylnitrosamine", J. Natl. Cancer Inst., 53, 1253 (1974).

   The effect of PCBs (Kanechlor 500) on liver carcinogenesis induced by 3-methyl-4 dimethylaminoazobenzene (3' Me-DAB), N-2-fluorenylacetamide (2-FAA) and/or diethylnitrosamine (DEN) was studied in male Sprague-Dawley rats. Duration of exposures were 20 weeks. Liver tumors developed with the three known liver carcinogens, i.e., 3' Me-DAB, 2 FAA, and DEN. No tumors developed in the animals fed PCBs alone and when fed with the above mentioned carcinogens a marked reduction in tumor incidence was observed. The lack of tumors in the PCBs fed rats may have been the result of low dose (500 ppm) and/or the short period of administration since these same authors had induced tumors in rats treated with Kanechlor 500 at 1000 ppm for 72 weeks. Histopathology findings of the livers were similar as previously reported; i.e., fatty changes and cell hypertrophy.

6. Kimbrough, R.D.; Squire, R.A.; Linder, R.E.; Strandberg, J.D.; Montali, R.J. and Burse, V.W., "Induction of Liver Tumors in Rats by Polychlorinated Biphenyl Aroclor(R) 1260", J. Natl. Cancer Inst. (in press, 1975).

Two hundred Sherman Strain female rats were fed 100 ppm of polychlorinated biphenyl (Aroclor 1260) for approximately 21 months, and 200 female rats were kept as controls. The rats were sacrificed when 23 months old. Twenty-six of 184 surviving experimental rats and 1 of 173 surviving control rats examined had hepatocellular carcinomas. None of the controls, but 146 of the 184 experimental rats, had neoplastic nodules in their liver. Areas of hepatocellular alteration were noted in 28 of the 173 controls and 182 of the 184 experimental rats. It was concluded that Aroclor 1260 had a hepatocarcinogenic effect in female Sherman Strain rats. The incidence of tumors in other organs did not differ appreciably between the experimental and control groups.

1.2.5 Bryan-Mantel and One Hit Model Calculations of Animal Data for Extrapolation to Humans

As indicated previously, statistical handling of experimental data helps resolve questions of experimental design and the problems of threshold in setting safe doses. We have applied the Bryan-Mantel and One Hit Model calculatior to two studies. The results of these analyses are presented in Tables I and II.

Therefore, using the recommendations set forth previously, we conclude that the use of the Bryan-Mantel Probit Model should be used to calculate the "safe" level of PCBs using a theoretical maximum acceptable lifetime risk of $1/10^6$ of development of hepatomas (neoplastic nodules). This dose is 167 ppt at the 99-percent confidence limits if the latest data in rats (Kimbrough 1975) is used. In the case of development of hepatocarcinomas, the level would be 11,887 ppt.

The rather low "safe" dose relative to the hepatomas reflects that the dosage level used in the experiment (i.e., 100 ppm) was too high for that response (146 hepatomas in 184 rats). These neoplasms are mostly benign tumors

Table I

Analysis of Carcinogenic Risk to Humans from Ingested PCBs Based on Kimbrough 1975 Study (Rats)

Analytical Method	Confidence Limits (%)	Intake Level in ppt for Specified Levels of Risk for Hepatocarcinomas			
		$1/10^8$*	$1/10^7$*	$1/10^6$*	$1/10^5$*
Bryan-Mantel	95	1963	5080	14,187	43,640
Bryan-Mantel	99	1645	4257	11,887	36,566
One Hit	95	4	45	447	4,472
One Hit	99	4	39	391	3,906

Analytical Method	Confidence Limits (%)	Intake Level for ppt for Specified Levels of Risk for Neoplastic Nodules			
		$1/10^8$	$1/10^7$	$1/10^6$	$1/10^5$
Bryan-Mantel	95	27	70	197	605
Bryan-Mantel	99	23	60	167	512
One Hit	95	0	2	21	205
One Hit	99	0	2	18	180

Analytical Method	Confidence Limits (%)	Intake Level for ppt for Specified Levels of Risk for Foci			
		$1/10^8$	$1/10^7$	$1/10^6$	$1/10^5$
Bryan-Mantel	95	0	1	3	10
Bryan-Mantel	99	0	1	2	6
One Hit	95	0	0	0	3
One Hit	99	0	0	0	1

*Risk level of one tumor per 10^8, 10^7, 10^6, or 10^5 population

Table II

Analysis of Carcinogenic Risk to Humans from Ingested PCBs based on Kimbrough-1974 Study (Mice)

		Intake Level in ppt for Specified Level of Risk for Hepatoma (Neoplastic Nodules)			
Analytical Method	Confidence Limits (%)	$1/10^{8*}$	$1/10^{7*}$	$1/10^{6*}$	$1/10^{5*}$
Bryan-Mantel	95	451	1167	3258	10022
	99	297	768	2145	6597
One Hit	95	2	21	214	2140
	99	2	16	160	1596

*Risk level of one tumor per 10^8, 10^7, 10^6, or 10^5 population.

occurring late in life. There is little time left for them to become malignant in the remaining life-time of the rat. Until further data become available or other means are used to handle existing data, one should assume the "safe" dose in lifetime human diet to be between 0.2 ppb and 12 ppb.

It is interesting to note that if the simian reproduction data is used and the classical 1/100 safety factor is applied to the lowest dose studied (2.5 ppm), a "safe" dose of 25 ppb is obtained. This dose (2.5 ppm), however, appears to be a minimal effective dose, whereas normally the highest no-effect level is used. Use of minimum effect levels and even other safety factors have been used; e.g., 1/10 to 1/5000. These would result in dosage levels ranging from 250 ppb to as low as 0.5 ppb.

These calculations must be considered preliminary since time has not permitted consideration of other factors, such as:

1) Body surface area instead of body weight in determining daily intake
2) Comparison with most likely human daily intake
3) Further calculations of existing data
4) Combination of all existing animal data
5) Consideration of metabolism, storage and excretion data among animals species as compared to man

1.3 Observations in Humans

In addition to data provided by continuing studies of the various effects of PCBs on laboratory animals, some information is available on the subacute or chronic effects of PCBs on humans.

Human intoxication with Kanechlor 400, a PCB manufactured in Japan (48-percent chlorine) was observed after a heat exchanger leaked fluid into rice oil which was then consumed by Japanese families in 1968. Approximately 1,000 persons were affected, and typical clinical findings included:

1. Increased eye discharge
2. Acne-like eruptions
3. Dark brown pigmentation of nails
4. Pigmentation of skin
5. Transient visual disturbance
6. Feeling of weakness
7. Numbness in limbs
8. Headache
9. Weight loss
10. Vomiting
11. Diarrhea
12. Fetal toxicity

Items 5 through 8 represent symptoms of damage to the nervous system seen in "Yusho" patients. PCBs are known to enter the brain, but they do not have a predominant central neurotoxic effect like the related hexachlorophene.

Laboratory findings in the severe cases included:

1. Red blood cells and hemoglobin decreased; leukocytes increased
2. Total serum lipids, triglycerides, alpha 2-globulins increased
3. Slight increase in alkaline phosphatase
4. Liver biopsy-reduction of rough endoplasmic reticulum; hypertrophy of smooth endoplasmic reticulum; giant mitochondria were frequently encountered

When 159 "Yusho" patients were examined in 1969 and 1970, it was found that 50 percent showed no clinical improvement and 10 percent were worse, another indication of the persistence of PCBs in the human body. The chemical was found to be stored primarily in the adipose tissue but also passed into the placenta and fetus.

A very early and common symptom in these patients was chloracne. Chloracne is an occupational skin disease caused by many chemicals. Chloracne resembles adolescent acne in some ways, but is generally more severe. Its symptoms consist of comedones with or without cysts and pustules. The openings of the hair

fallicles are filled with oil and protein material. Darkening of the skin and secondary inflammation may also occur. During the 1930s and 1940s several large outbreaks occurred in workers engaged in the manufacture of PCBs and closely related chemicals.

The disease can be produced by both direct skin exposure and by oral intake of PCBs. The ability of oral consumption of PCBs to cause persistent chloracne was convincingly demonstrated in the "Yusho" incident, where chloracne was still present in several people three years after oral consumption of PCBs had ceased.

The same study showed no significant difference among sexes, but a significant difference in clinical severity by age was observed, with the 13- to 29-year-old group being the most sensitive. Of the 11 babies born to affected mothers, 2 were stillborn, 9 had dark-brown stained skin, and increased eye discharge was noticeable in most. Growth rates of affected children, as measured by both height and weight gains, were monitored and compared with unaffected classmates; a significant decrease in growth rate was detected in the males who were poisoned, but no definitive change was observed in the females.

Rice oil exposure levels were calculated at approximately 15,000 mg/day (average); the oil itself was reported to be contaminated at about 2,000 ppm Kanechlor 400 (derived from the known organic chlorine content of rice oil in relation to the known organic chlorine content of the PCB). The average total dose of PCBs causing an effect in these victims was reported as 2,000 mg. The lowest PCB level that produced human effects (50 kg man) was 500 mg consumed over a period of 50 days at a rate of approximately 200 ug/kg/day. The effect level was based, however, on overt symptoms, rather than on sensitive biochemical indicators that might have demonstrated effects at even lower levels. Since PCBs probably have a long biological half-life in humans, a toxicological analysis of the human data must be based on the assumption that ingested PCBs would continue to accumulate in tissues for a long period of time.

The apparent human health threat from chronic ingestion of PCBs prompted the U.S. Food and Drug Administration to issue proposed limitations on the levels

of PCBs in foods, animal feeds, and food packaging materials. On July 6, 1973, final regulations were promulgated that established temporary tolerances for PCB residues arising from unavoidable contamination. These tolerances are:

1. 2.5 ppm in milk (fat basis)
2. 2.5 ppm in manufactured dairy products (fat basis)
3. 5 ppm in poultry (fat basis)
4. 0.5 ppm in eggs
5. 0.2 ppm in finished animal feed for food-producing animals (except the following finished animal feeds: feed concentrates, feed supplements, and feed premixes)
6. 2 ppm in animal feed components of animal origin, including fishmeal and other by-products of marine origin and in fish animal feed concentrates, supplements, and premixes intended for food-producing animals
7. 5 ppm in edible portions of fish and shellfish (the edible portion of fish excludes head, scales, viscera, and inedible bones)
8. 0.2 ppm in infant and junior foods
9. 10 ppm in paper food-packaging material intended for or used with human food, finished animal feed and any components intended for animal feeds (the tolerance does not apply to paper food-packaging material separated from the food by a barrier impermeable to migration of PCBs)

1.4 Conclusions

PCBs localize in certain tissues and do not break down easily in the body. This persistence leads to cumulative toxicity. Early toxicological evidence concerning the chronic adverse health effects of PCBs from experimental animals such as mice and rats and from observational data in humans has been more recently

supplemented by additional experimental findings in monkeys. A close correlation exists between the symptoms noted in humans and those noted in the monkeys, suggesting that the dose response relationships and metabolic and excretion phenomena of PCBs are similar in both humans and monkeys. According to some pathologists, PCB exposure can cause cancerous liver lesions.

Evidence from relatively short-term exposure (several months) and chronic exposure in animals or humans demonstrates that PCBs are a significant health hazard.

EVALUATION OF RISK FOR POTENTIAL SUBSTITUTES FOR PCBs

2.0 INTRODUCTION

Although unattainable, absolute safety (i.e., absolute control) is the goal society would like to achieve with regard to all chemicals introduced by industry. Safety as practiced, however, always entails some degree of risk. But experience has shown that maximization of chemical, physical, and toxicological information will minimize risk. For example, if a given compound is known to end up in man's food supply, information on its chemistry and potential chronic toxicity would be essential to minimizing the public health hazard.

The experience with PCBs illustrates the enormous range of complexity of risk evaluation that many new compounds may require for maximum public safety. We believe no one could have foreseen the present situation with PCBs. Thus we strongly feel all substances should not be subjected to a single rigid routine of study, as such action would be self defeating.

Instead, we propose that an orderly step-wise approach be made. Information gathered on specific chemicals should show the direction for the acquisition of additional information. The continuous use and especially the increasing use of new chemicals should be paralleled by additional testing of the chemicals. Such a hierarchy or sequential testing will: (1) result in avoidance of unnecessary test procedures and (2) answer those questions which will in the long run reveal the most productive information.

2.1 Estimation of Dose to the Target System

Mass production of chemicals invariably results in some degree of environmental contamination, but the route by which a given contaminant affects humans varies according to the type of compound. Vinyl chloride, for instance, presents a hazard almost entirely on the occupational level - that is, among workers dealing with vinyl chloride. For PCBs, on the other hand, exposure through direct contact is not the issue; bioaccumulation through the food chain is the exposure route of interest.

The pattern of use is one of the most significant factors in determining the exposure of the target system. The use of PCBs in carbonless paper prior to the voluntary ban on this use in 1971 has proven to be an excellent example of the devious routes by which pollutants find their way into our food — carbonless paper is recycled to paperboard for food packaging, and, in addition to PCB release to the waterways during the recycling process, the paperboard itself leaches PCBs to food it contains.

The method of disposal of waste also presents problems, especially with such highly stable compounds as PCBs. Ease of disposability and rapid decomposition to inert compounds after disposal are characteristics which are highly desirable in substitutes for PCBs.

For some PCB substitutes an elaborate examination of their movement through the environment, their transformation by chemical, physical or biological interactions and the dissemination and transport of the resultant compounds may be essential.

The nature of injury must be considered. A reversible functional effect, though undesirable, would be of vastly less consequence than irreversible and fatal effects. Mutagenesis and teratogenesis are more subtle forms of injury, but the testing methods for these grave threats generally are elaborate and involved. This field, however, is advancing rapidly.

With respect to wildlife, considerations are substantially different than with man. Because of the impossibility of pretesting all species with all new chemicals, concern must of necessity be on the endangerment of a species or of a local animal population. This type of information frequently can only be obtained by constant surveillance of the environment within which a compound is released.

2.2 Nature of Tests Needed to Evaluate Human Health Effects

The major determinants of the effects of chemicals upon the health and well-being of the individual and society are:

1. The nature of the chemical *per se*

2. The duration of exposure

3. The quantity of the chemical

If a relatively large amount of a toxic chemical acts for a short period of time, the effects are acute, while relatively small amounts acting over long periods tend to produce chronic effects. Other more subtle effects have been noted, and cancer, modification of behavior, genetic effects, potentiation of the toxicity of other environmental compounds may also have to be investigated.

Clearly there is no one protocol by which to evaluate toxicity of every chemical. The following protocols are presented as guidelines only.

2.3 Physical and Chemical Properties

Basic information on physical and chemical properties are, of course, essential. These data are needed not only for analysis and monitoring, but to assess stability and determine whether and where a chemical is likely to be found in the environment. The following data can be easily gathered in a laboratory:

1. Chemical composition
2. Common name, if established
3. Chemical name (Chemical Abstracts, Wiswesser nomenclature)
4. Trade name
5. Structural formula
6. Melting point
7. Boiling point
8. Vapor pressure
9. Density or specific gravity
10. Solubility in water and in selected organic solvents and oils
11. Dissociation constants (pKa or pKb)
12. Physical state
13. Color
14. Odor
15. pH
16. Flashpoint
17. Viscosity

Reactions and other characteristics of a chemical in relation to other compounds such as, water, air, and soil should include the following:

1. Oxidizing properties
2. Reducing properties
3. Corrosive hazard
4. Explosive characteristics
5. Hydrolysis rate
6. Photochemistry

2.3.1 Structure and Reactions

Elemental composition, structure, and formula weight may suffice to suggest various reaction a compound is capable of, but the chemistry of new compounds may be highly specialized, and predictive characteristics may not be apparent. In addition to the oxidative, reductive and hydrolysis reactions, reactions of biological importance should also be considered; for example, alkylation, dealkylation, esterification, isomerization, and conjugation with animal and plant constituents may aid in the choice of future testing procedures. Rates and degree of completion of reactions also are useful; for example, the rate of dehydrohalogenation of organochlorine compounds at high pH could provide leads to relative persistence.

2.3.2 Physical Properties

Knowledge of physical properties assists not only in determination of purity, but more importantly, aids in assessment of the potential behavior in and flow through the environment. Physical properties are also useful to the toxicologist in the design of his studies.

2.3.3 Impurities

Impurities such as residues of reactants, residual solvent and congeners, and the products of side reactions must be identified. Many final commercial products are deliberate mixtures. The toxicologist must recognize the problems of impurities and mixtures. The recent experience of 2,4,5T having dioxin contamination is an example. This impurity later was shown to have an LD_{50} for

guinea pigs of 1 μg/Kg. Chlorobenzofuran appears to be not only a likely impurity of the parent PCBs, but may also be produced in the intended use of the PCBs; indeed it may even be a metabolic transformation product.

2.4 Information on Manufacturing Process and Possible Losses

The following data on manufacture will be useful in the assessment of PCB substitutes:

1. Description of the basic manufacturing process
2. Purity of starting and intermediate materials
3. Description of quality controls
4. Composition of the technical product including the names and amounts of impurities
5. Annual production reports
6. Present and anticipated uses
7. Means of transportation to site of use
8. Disposal of waste of production
9. Disposal of "spent" material that may contain the chemical
10. Accidental losses likely to occur

2.4.1 Production, Use, Disposal

Knowledge of the production, use and disposal of a chemical will be extremely helpful, along with physical and chemical properties, to estimate exposure levels to specific target systems. These estimates then can be used to identify the control systems that might be instituted to minimize release to the environment. In general, releases associated with production are amenable to controls on manufacturers; releases associated with use are amenable controls on users. Voluntary control over releases during use (equivalent to the voluntary controls exercised by Monsanto with regard to production) warrant further investigation, because the use of a chemical is intimately related to its potential release to the environment. Releases associated with disposal are also related to production and use, but are most easily controlled at the municipal level.

2.4.2 Production Specifics

Production is the first level at which a chemical is likely to be introduced to the environment (i.e., through emissions); it is also at this stage that human toxicological data may be first obtained, through occupational exposure. Records of health and exposure levels of employees as now required by the Occupational Health and Safety Administration will be of inestimable value in assessing health effects; the discovery of hemangiosarcoma in workers exposed to vinyl chloride is an example.

Data on production and production losses must be obtained from manufacturers. Inventory statistics and data on methods of transport to major clients will be essential in quantifying losses. All data should be expressed on the final product, i.e., commercial grade, since impurities may prove more harmful than the product itself. Data on the losses from production and transport processes are of critical importance. Much of these data are company confidential and allowances will be necessary to protect confidentiality.

2.4.3 Uses

By far the most important information needed to estimate the exposure of a target population is a knowledge of the uses of a chemical. The first step in understanding how chemicals get to the environment would be to classify the uses into two categories: (1) contained uses, and (2) dispersive uses.

In general those uses designated as contained will not introduce large quantities of chemicals to the environment. However, experience with PCBs has shown that accidents, when they occur, frequently result in massive spills. Information on possible methods and amounts of release during normal contained usage should be carefully considered. The ultimate air route of dispersal of PCBs was never considered a serious threat, though it now appears this may be the major route of dispersal.

The use of consumer products containing toxic materials can result in significant direct exposure as well as affect the disposal pattern of these materials.

2.4.4 Disposal

The disposal of chemicals in contained uses is, of course, a major concern, especially with persistent materials such as PCBs. Labelling and refund incentives may be necessary in order to get "spent" materials into the hands of persons knowledgeable in proper disposal techniques. The flow of discarded consumer products, however, presents a much more serious threat. Lack of ability to control this type disposal is obvious.

For products having a short life, disposal rates are approximately equal to production rates. For products with a longer life and rapidly growing consumption rate, the rate of disposal will be smaller than the rate of production and may be estimated from the service life of the product and from production records.

2.5 Environmental Rate - Chemodynamics, Environmental Alteration, and Bioaccumulation

2.5.1 Outline

The following outline lists the type of information needed to investigate adequately the toxicological consequence of introduction of a new chemical such as a PCB substitute. It is not meant to be conclusive but is only intended as a guideline. These data will assist the toxicologist in relating the adverse effect levels in animals to appropriate exposure levels for humans.

I. Movement and fate in water
   - A) Dissipation rate in distilled water
     1. hydrolysis rate at acid, basic, and neutral pH
     2. photodegradation
   - B) Degradation in water containing suspended solids
   - C) Degradation in bottom sediments
   - D) Rate and extent of movement in flowing water — chemical analysis of water downstream
   - E) Bioaccumulation in aquatic microorganisms

II. Movement and fate in soil

A) Soil metabolism studies — aerobic and anaerobic

B) Soil persistence studies

C) Leaching studies

III. Movement into and fate in air

A) Volatilization from water, soil and normal use

B) Photodegradation

IV. Fish uptake — in flowing water until plateau is reached and clearing in clean water

V. Biodegradability under sewage treatment conditions

2.5.2 Behavior in Aquatic Environment

The major factors contributing to the partition of a chemical into the aquatic environment are its solubility and latent heat of solution. Because so many organic compounds are hydrophobic, exact solubilities are difficult to obtain. Many of these compounds tend to accumulate at the air/water interface and to form clusters of varying particle size. Temperature, pH, salt content, and other variables affect solubility.

Microbial, photochemical and chemical transformations in aquatic systems play an important role in the ultimate fate of chemicals. Bioaccumulation occurs through:

1.) Direct, active ("intended") transport into an organism's system
2.) Active transport, where the compound is mistaken for one with similar properties (e.g., arsenic being taken up in place of phosphorus)
3.) Passive complex formation, with ligands in the organism
4.) Solubility equilibrium between fat (in the organism) and water

II. Movement and fate in soil

A) Soil metabolism studies — aerobic and anaerobic

B) Soil persistence studies

C) Leaching studies

III. Movement into and fate in air

A) Volatilization from water, soil and normal use

B) Photodegradation

IV. Fish uptake — in flowing water until plateau is reached and clearing in clean water

V. Biodegradability under sewage treatment conditions

2.5.2 Behavior in Aquatic Environment

The major factors contributing to the partition of a chemical into the aquatic environment are its solubility and latent heat of solution. Because so many organic compounds are hydrophobic, exact solubilities are difficult to obtain. Many of these compounds tend to accumulate at the air/water interface and to form clusters of varying particle size. Temperature, pH, salt content, and other variables affect solubility.

Microbial, photochemical and chemical transformations in aquatic systems play an important role in the ultimate fate of chemicals. Bioaccumulation occurs through:

1.) Direct, active ("intended") transport into an organism's system
2.) Active transport, where the compound is mistaken for one with similar properties (e.g., arsenic being taken up in place of phosphorus)
3.) Passive complex formation, with ligands in the organism
4.) Solubility equilibrium between fat (in the organism) and water