United States
Environmental Protection
Agency

Office of Water
Regulations and Standards
Criteria and Standards Division
Washington DC 20460

EPA 440/5-80-038
October 1980

EPA

Ambient Water Quality Criteria for DDT

AMBIENT WATER QUALITY CRITERIA FOR

DDT

Prepared By
U.S. ENVIRONMENTAL PROTECTION AGENCY

Office of Water Regulations and Standards
Criteria and Standards Division
Washington, D.C.

Office of Research and Development
Environmental Criteria and Assessment Office
Cincinnati, Ohio

Carcinogen Assessment Group
Washington, D.C.

Environmental Research Laboratories
Corvalis, Oregon
Duluth, Minnesota
Gulf Breeze, Florida
Narragansett, Rhode Island

DISCLAIMER

This report has been reviewed by the Environmental Criteria and Assessment Office, U.S. Environmental Protection Agency, and approved for publication. Mention of trade names or commercial products does not constitute endorsement or recommendation for use.

AVAILABILITY NOTICE

This document is available to the public through the National Technical Information Service, (NTIS), Springfield, Virginia 22161.

FOREWORD

Section 304 (a)(1) of the Clean Water Act of 1977 (P.L. 95-217), requires the Administrator of the Environmental Protection Agency to publish criteria for water quality accurately reflecting the latest scientific knowledge on the kind and extent of all identifiable effects on health and welfare which may be expected from the presence of pollutants in any body of water, including ground water. Proposed water quality criteria for the 65 toxic pollutants listed under section 307 (a)(1) of the Clean Water Act were developed and a notice of their availability was published for public comment on March 15, 1979 (44 FR 15926), July 25, 1979 (44 FR 43660), and October 1, 1979 (44 FR 56628). This document is a revision of those proposed criteria based upon a consideration of comments received from other Federal Agencies, State agencies, special interest groups, and individual scientists. The criteria contained in this document replace any previously published EPA criteria for the 65 pollutants. This criterion document is also published in satisifaction of paragraph 11 of the Settlement Agreement in Natural Resources Defense Council, et. al. vs. Train, 8 ERC 2120 (D.D.C. 1976), modified, 12 ERC 1833 (D.D.C. 1979).

The term "water quality criteria" is used in two sections of the Clean Water Act, section 304 (a)(1) and section 303 (c)(2). The term has a different program impact in each section. In section 304, the term represents a non-regulatory, scientific assessment of ecological effects. The criteria presented in this publication are such scientific assessments. Such water quality criteria associated with specific stream uses when adopted as State water quality standards under section 303 become enforceable maximum acceptable levels of a pollutant in ambient waters. The water quality criteria adopted in the State water quality standards could have the same numerical limits as the criteria developed under section 304. However, in many situations States may want to adjust water quality criteria developed under section 304 to reflect local environmental conditions and human exposure patterns before incorporation into water quality standards. It is not until their adoption as part of the State water quality standards that the criteria become regulatory.

Guidelines to assist the States in the modification of criteria presented in this document, in the development of water quality standards, and in other water-related programs of this Agency, are being developed by EPA.

STEVEN SCHATZOW
Deputy Assistant Administrator
Office of Water Regulations and Standards

ACKNOWLEDGEMENTS

Aquatic Life Toxicology:

William A. Brungs, ERL-Narragansett
U.S. Environmental Protection Agency

David J. Hansen, ERL-Gulf Breeze
U.S. Environmental Protection Agency

Mammalian Toxicology and Human Health Effects:

Maria Rabello (author)
University of Texas Medical Branch

James Barnett (author)
University of Texas Medical Branch

Michael L. Dourson (doc. mgr.)
ECAO-Cin
U.S. Environmental Protection Agency

Jerry F. Stara (doc. mgr.) ECAO-Cin
U.S. Environmental Protection Agency

Alfred Garvin
University of Cincinnati

Steven D. Lutkenhoff, ECAO-Cin
U.S. Environmental Protection Agency

Donald P. Morgan
University of Iowa

W. Bruce Pierano, HERL-Cin
U.S. Environmental Protection Agency

Donna Sivulka, ECAO-Cin
U.S. Environmental Protection Agency

Joseph Arcos
Tulane Medical Center

Tom Conner
University of Texas Medical Branch

Patrick Durkin
Syracuse Research Corporation

William Dykstra, OTS
U.S. Environmental Protection Agency

Wayland Hayes
Vanderbilt University

Fumio Matsamura
Michigan State University

Gary Osweiler
University of Missouri

Shane Que Hee
University of Cincinnati

Roy E. Albert, CAG*
U.S. Environmental Protection Agency

Technical Support Services Staff: D.J. Reisman, M.A. Garlough, B.L. Zwayer, P.A. Daunt, K.S. Edwards, T.A. Scandura, A.T. Pressley, C.A. Cooper, M.M. Denessen.

Clerical Staff: C.A. Haynes, S.J. Faehr, L.A. Wade, D. Jones, B.J. Bordicks, B.J. Quesnell, P. Gray, R. Rubinstein.

*CAG Participating Members: Elizabeth L. Anderson, Larry Anderson, Ralph Arnicar, Steven Bayard, David L. Bayliss, Chao W. Chen, John R. Fowle III, Bernard Haberman, Charalingayya Hiremath, Chang S. Lao, Robert McGaughy, Jeffrey Rosenblatt, Dharm V. Singh, and Todd W. Thorslund.

TABLE OF CONTENTS

	Page
Criteria Summary	
Introduction	A-1
Aquatic Life Toxicology	B-1
Introduction	B-1
Effects	B-2
Acute Toxicity	B-2
Chronic Toxicity	B-5
Plant Effects	B-6
Residues	B-6
Miscellaneous	B-11
Summary	B-11
Criteria	B-11
References	B-53
Mammalian Toxicology and Human Health Effects	C-1
Exposure	C-1
Ingestion from Water	C-1
Ingestion from Food	C-3
Inhalation	C-9
Dermal	C-12
Summary	C-12
Pharmacokinetics	C-13
Absorption	C-13
Distribution	C-14
Metabolism	C-21
Excretion	C-29
Effects	C-31
Acute, Subacute and Chronic Toxicity	C-31
Synergism and/or Antagonism	C-33
Teratogenicity	C-35
Mutagenicity	C-38
Carcinogenicity	C-45
Criterion Formulation	C-64
Existing Guidelines and Standards	C-64
Current Levels of Exposure	C-66
Special Groups at Risk	C-68
Basis and Derivation of Criterion	C-69
References	C-74
Appendix	C-93

CRITERIA DOCUMENT

DDT AND METABOLITES

CRITERIA

Aquatic Life

DDT

For DDT and its metabolites the criterion to protect freshwater aquatic life as derived using the Guidelines is 0.0010 µg/l as a 24-hour average and the concentration should not exceed 1.1 µg/l at any time.

For DDT and its metabolites the criterion to protect saltwater aquatic life as derived using the Guidelines is 0.0010 µg/l as a 24 hour average and the concentration should not exceed 0.13 µg/l at any time.

TDE

The available data for TDE indicate that acute toxicity to freshwater aquatic life occurs at concentrations as low as 0.6 µg/l and would occur at lower concentrations among species that are more sensitive than those tested. No data are available concerning the chronic toxicity of TDE to sensitive freshwater aquatic life.

The available data for TDE indicate that acute toxicity to saltwater aquatic life occurs at concentrations as low as 3.6 µg/l and would occur at lower concentrations among species that are more sensitive than those tested. No data are available concerning the chronic toxicity of TDE to sensitive saltwater aquatic life.

DDE

The available data for DDE indicate that acute toxicity to freshwater aquatic life occurs at concentrations as low as 1,050 µg/l and would occur at lower concentrations among species that are

more sensitive than those tested. No data are available concerning the chronic toxicity of DDE to sensitive freshwater aquatic life.

The available data for DDE indicate that acute toxicity to saltwater aquatic life occurs at concentrations as low as 14 ug/l and would occur at lower concentrations among species that are more sensitive than those tested. No data are available concerning the chronic toxicity of DDE to sensitive saltwater aquatic life.

Human Health

For the maximum protection of human health from the potential carcinogenic effects due to exposure of DDT through ingestion of contaminated water and contaminated aquatic organisms, the ambient water concentration should be zero based on the non-threshold assumption for this chemical. However, zero level may not be attainable at the present time. Therefore, the levels which may result in incremental increase of cancer risk over the lifetime are estimated at 10^{-5}, 10^{-6} and 10^{-7}. The corresponding recommended criteria are 0.24 ng/l, 0.024 ng/l, and 0.0024 ng/l, respectively. If the above estimates are made for consumption of aquatic organisms only, excluding consumption of water, the levels are 0.24 ng/l, 0.024 ng/l, and 0.0024 ng/l, respectively.

INTRODUCTION

DDT, first synthesized in Germany in 1874, has been used extensively world-wide for public health and agricultural programs. Its efficacy as a broad spectrum insecticide and its low cost make it the insecticide for those measures for most of the world.

Following an extensive review of health and environmental hazards of DDT, U.S. EPA decided to ban its further use. This decision was based on several well evidenced properties such as: (1) DDT and its metabolites are toxicants with long-term persistence in soil and water, (2) it is widely dispersed by erosion, runoff and volatilization, (3) the low-water solubility and high lipophilicity of DDT result in concentrated accumulation of DDT in the fat of wildlife and humans which may be hazardous. Agricultural use of DDT was cancelled by the U.S. EPA in December, 1972. Prior to this, DDT had been widely used in the U.S. with a peak usage in 1959 of 80 million pounds. This amount decreased steadily to less than 12 million pounds by 1972. Since the 1972 ban, the use of DDT in the U.S. has been effectively discontinued.

Table 1 gives abbreviations and their meanings as used in the text of this document. The physical properties of DDT isomers are listed as well.

TABLE 1

DDT and Its Metabolites

DDT refers to technical DDT, which is usually composed of:

77.1% p,p'-DDT

14.9% o,p'-DDT

0.3% p,p'-DDD

0.1% o,p'-DDD

4.0% p,p'-DDE

0.1% o,p'-DDE

3.5% unidentified compounds

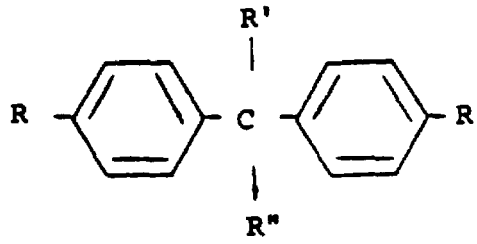

		R	R'	R"
DDT	1,1'-(2,2,2-trichloroethylidene)-bis/4-chlorobenzene/	-Cl	-H	$-CCl_3$
DDE	1,1'-(2,2-dichloroethenylidene)-bis/4-chlorobenzene/	-Cl	None	$=CCl_2$
DDD	1,1'-(2,2-dichloroethylidene)-bis/4-chlorobenzene/	-Cl	-H	$-CHCl_2$
DDMU	1,1'-(2-chloroethenylidene)-bis/4-chlorobenzene/	-Cl	None	=CHCl
DDMS	1,1'-(2-chloroethylidene)-bis/4-chlorobenzene/	-Cl	-H	$-CH_2Cl$
DDNU	1,1-bis(4-chlorophenyl) ethylene	-Cl	None	$=CH_2$
DDOH	2,2-bis(4-chlorophenyl) ethanol	-Cl	-H	$-CH_2OH$
DDA	2,2-bis(4-chlorophenyl)-acetic acid	-Cl	-H	-C-OH ‖ O

Physical Properties

The general physical properties of the DDT isomers are given below:

Molecular weight (Windholz, M. (ed.), 1976)	354.5
Melting point (Gunther and Gunther, 1971)	108.5-109.0°C (pp') 74-74.5°C (op')
Boiling Point (Gunther and Gunther, 1971)	185°C (pp')
Vapor pressure	
(Martin, 1972)	1.9×10^{-7} torr (pp') at 25°C
(Spencer, 1975)	7.3×10^{-7} torr (pp') at 30°C
	5.5×10^{-6} torr (op') at 30°C
(Metcalf, 1972) at 20°C	1.5×10^{-7} torr (pp') at 20°C
Solubility in water at 25°C	
(Weil et al., 1974)	5.5 ppb (pp')
	26 ppb (op')
(Biggar and Riggs, 1974)*	25 ppb (pp')
	85 ppb (op')
Metcalf, 1972)	~2 ppb
(Bowman et al., 1960)	<1.2 ppb (pp')
Log octanol/water partition coefficient	
(O'Brien, 1974)	6.19 (pp', calc.)
(Kengaga and Goring, 1978)	5.98
(Wolfe et al., 1977)	4.89
(Kapoor et al., 1973)	3.98 (pp', measured)

*Particle size <5.0 µm.

REFERENCES

Bowman, M.C., et al. 1960. Solubility of carbon-14 DDT in water. Jour. Agric. Food Chem. 8: 406.

Gunthr, F.A. and J.D. Gunther. 1971. Residues of pesticides and other foreign chemicals in foods and feeds. Res. Rev. 36: 69.

Kapoor, I.P., et al. 1973. Structure activity correlations of biodegradability of DDT analogs. Jour. Agric. Food Chem. 21: 310.

Kenaga, E.E. and C.A. Goring. 1978. Relationship between water solubility, soil-sorption, octanol/water partitioning, and bioconcentration of chemicals in biota. Am. Soc. Test. Mater. Third Aquatic Tox. Symp., New Orleans, Louisiana.

Martin, H., (ed.) 1972. Pesticide Manual. 3rd ed. Br. Crop Prot. Counc., Worcester, England.

Metcalf, R.L. 1972. DDT substitutes. Crit. Rev. Environ. Control. 3: 25.

O'Brien, R.D. 1974. Nonenzymic Effects of Pesticides on Membranes. In: R. Haque and V.H. Freed, (eds.) Environmental Dynamics of Pesticides. Plenum Press, New York. p. 331.

Spencer, W.F. 1975. Movement of DDT and its derivatives into the atmosphere. Res. Rev. 59: 91.

Weil, L., et al. 1974. Solubility in water of insecticide chlorinated hydrocarbons and polychlorinated biphenyls in view of water pollution. Z. Wasser Abwasser Forsch. 7(6): 169.

Windholz, M. (ed.) 1976. The Merck Index, 9th ed. Merck and Co., Inc. Rahway, New Jersey.

Wolfe, N.L., et al. 1977. Methoxychlor and DDT degradation in water: Rates and products. Environ. Sci. Technol. 7(110): 1077.

Aquatic Life Toxicology*

INTRODUCTION

DDT, a chlorinated hydrocarbon insecticide, was at one time the most widely used chemical for the control of insect pests. It was applied for more than 30 years to a variety of environments, including the aquatic environment, in many forms such as powders, emulsions, and encapsulations. DDT has probably been subjected to more investigations than any of the other chlorinated hydrocarbon pesticides such as aldrin, dieldrin, endrin, chlordane, and toxaphene.

DDT is a persistent, lipid-soluble pesticide. Long-lived pesticides provide control of target organisms over extended periods of time and reduce the need for reapplication, but may also affect non-target flora and fauna for long periods of time. Because of its persistent nature, coupled with hydrophobic properties and solubility in lipids, DDT and its metabolites are concentrated by aquatic organisms at all trophic levels from water, enter the food web, and are bioaccumulated by organisms at higher trophic levels.

DDT has several metabolites; the two most frequently found in nature are TDE (DDD or Rhothane) and DDE. TDE was manufactured as an insecticide and used for a number of years. Most of the available aquatic toxicity data are for DDT. However, because of their widespread occurrence and particularly their toxicities to consumer species, TDE and DDE are included in this criterion document.

DDT is intermediate in toxicity to fishes in comparison to other chlorinated hydrocarbon pesticides. It is less toxic than aldrin, dieldrin, endrin,

*The reader is referred to the Guidelines for Deriving Water Quality Criteria for the Protection of Aquatic Life and Its uses in order to understand this section better. The attached tables contain pertinent available data, and at the bottoms of the appropriate tables are calculations deriving various measures of toxicity as described in the Guidelines.

and toxaphene, but more toxic than chlordane, lindane, and methoxychlor (Henderson, et al. 1959; Katz, 1961).

Most acute toxicity data for DDT are from static tests; few flow-through studies have been conducted. Relatively few data are available that describe the chronic effects of DDT on aquatic animals. Chronic test data are available for only one species of freshwater fish, and no life-cycle toxicity test has been conducted on a freshwater invertebrate species nor on any saltwater species. Few data are available on effects of DDT on plants.

Many references on bioconcentration data are available. However, a number of these were not usable, either because it appeared that a steady-state condition was not reached in laboratory experiments or, in the case of field monitoring, adequate documentation of the concentration of DDT in the water was not available.

Derivation of a DDT criterion must consider not only acute and chronic toxicity to aquatic organisms, but also its propensity for bioaccumulation, its breakdown into long-lived metabolites, and the toxicity of DDT and its metabolites to organisms at higher trophic levels, such as birds of prey, as a result of food chain bioaccumulation.

Data discussed in the following sections are for DDT unless otherwise specified.

EFFECTS

Acute Toxicity

Acute toxicity data are available for 18 freshwater invertebrate species for a total of 46 data points (Table 1). Invertebrate species for the most part are more sensitive than fish species, but the range of invertebrate species LC_{50} values (10,000 times) is greater than that (300 times) for

fishes. The least sensitive invertebrate species is the stonefly, Pteronarcys californica, for which a 96-hour LC_{50} value of 1,800 µg/l was determined (Gaufin, et al. 1965). This LC_{50} is almost 16 times greater than the geometric mean of the other three LC_{50} values for the same species (Table 1); however, no valid reason to discount this value could be found. The most sensitive aquatic invertebrate species is a crayfish, Orconectes nais, with an LC_{50} of 0.18 µg/l for 1-week-old organisms (Sanders, 1972). However, 10-week-old crayfish of the same species had an LC_{50} of 30 µg/l.

Only two of the acute values for freshwater invertebrate species (Table 1) were derived from flow-through tests, and none were from a test with measured toxicant concentrations. The result of one flow-through test in Table 1 is one-fourth of the static test result for the same species of scud, Gammarus fasciatus (Sanders, 1972), whereas in another comparison the result of a static test is lower than the result from a flow-through test with the glass shrimp, Palaemonetes kadiakensis (Sanders, 1972). This difference may be due to a difference between species or to experimental variability. TDE is more toxic than DDT to three invertebrate species (a glass shrimp, Palaemonetes kadiakensis, and two species of scud, Gammarus fasciatus and Gammarus lacustris), but less toxic than DDT to the cladocerans, Daphnia pulex and Simocephalus serrulatus, and the sowbug, Asellus brevicaudus (Table 1).

Data are available for 24 freshwater fish species for a total of 107 values (Table 1). Two of the LC_{50} values are from flow-through tests, and the rest are from static tests. The flow-through LC_{50} value (unmeasured concentrations) for rainbow trout fry (Tooby, et al. 1975) is equal to or less than 85 percent of the 13 static values for the same species. The only flow-through test with a measured toxicant concentration (Jarvinen, et al.

1977) is for the fathead minnow, and the LC_{50} value is greater than 87 percent of all static LC_{50} values for the same species. Since the water solubility of DDT is not high, it would be expected that static tests would underestimate toxicity as indicated by the rainbow trout data. The fathead minnow data, however, are in contrast to this, perhaps because of large variability for this species with DDT. Lincer, et al. (1970) demonstrated that the fathead minnow was more sensitive to DDT in the static than in the flow-through test (48-hour static = 7.4 µg/l, 48-hour flow-through = >40 µg/l), and Macek and Sanders (1970) determined that among five fish species tested, variation in susceptibility to DDT was greatest in the fathead minnow. Interspecific variability, shown by the LC_{50} values in Table 1, indicates that the fathead minnow is more variable than 87 percent of the 24 species for which there are data available. Only three species are more variable: goldfish, guppy, and brook trout, with the goldfish being the most variable.

The yellow perch is the fish species most sensitive to DDT (96-hour LC_{50} of 0.6 µg/l) (Marking, 1966), whereas the least sensitive species is the goldfish (96-hour LC_{50} of 180 µg/l) (Marking, 1966). Therefore, the range of species sensitivity for the tested fishes is 300 times.

The Freshwater Final Acute Value for DDT, derived from the species mean acute values listed in Table 3 using the procedure described in the Guidelines, is 1.1 µg/l. Acute data for TDE and DDE are insufficient to determine a Freshwater Final Acute Value for these compounds.

Acute toxicity tests on six saltwater invertebrate species (Table 1) produced acute LC_{50} values from 0.14 to 9.0 µg/l; the lowest value is the 96-hour LC_{50} for the brown shrimp (Penaeus aztecus). Data are available for a mollusc and four different families of arthropods. Table 6 reports 24- or 48-hour EC_{50} values for five species giving EC_{50} values ranging from 0.6 to 10 µg/l.

Acute 96-hour toxicity tests with 11 species of saltwater fishes (representing nine fish families) gave LC_{50} values ranging from 0.26 to 89 µg/l. The northern puffer was by far the least sensitive; most other LC_{50} values for fish species range between 0.5 and 7 µg/l. Table 6 reports 48-hour LC_{50} values for six species with LC_{50} values from 0.32 to 3.2 µg/l.

The Saltwater Final Acute Value for DDT, derived from the species mean acute values listed in Table 3 using the procedure described in the Guidelines, is 0.13 µg/l.

In tests on TDE, 96-hour LC_{50} values are reported for three saltwater species. The acute values range from 1.6 to 25 µg/l. Results of 48-hour tests on pink shrimp (Penaeus duorarum) and the longnose killifish (Fundulus similis) provide LC_{50} values of 2.4 and 42 µg/l, respectively (Table 6). Test data on TDE are insufficient to provide a Saltwater Final Acute Value according to the Guidelines.

In the only available 96-hour test on DDE, the EC_{50} (based on shell deposition) for the oyster, Crassostrea virginica, was 14 µg/l. In tests lasting 48 hours (Table 6), two species were exposed to DDE. The 48-hour LC_{50} value for the brown shrimp was 28 µg/l; that for spot was 20 µg/l. Test data on DDE are insufficient to provide a Saltwater Final Acute Value according to the Guidelines.

Chronic Toxicity

Chronic toxicity data for DDT for are available for only one freshwater fish species, the fathead minnow (Jarvinen, et al. 1977). The chronic value for this study is 0.74 µg/l (Table 2). The comparable 96-hour LC_{50} value (48 µg/l) from the same study is 65 times higher than the chronic toxicity value.

No chronic toxicity data were found for any freshwater invertebrate species nor for any saltwater animal species.

Because the available data do not meet the minimum data base requirement set forth in the Guidelines, no Final Chronic Values can be determined for DDT, TDE, or DDE.

Plant Effects

Four species of freshwater algae (Table 4) have a wide range of sensitivity (2,700 times), with most plant values being above the Final Acute Value for aquatic animals. The lowest effect value for plants is 0.3 µg/l, determined from the growth and morphology data for *Chlorella* sp. (Sodergren, 1968).

Information on the sensitivity of saltwater aquatic plant species, including algae and rooted vascular plants, is limited (Table 4) but indicates that they are much less sensitive to DDT than are fish or invertebrate species. DDT at a concentration of 10 µg/l has been found to reduce photosynthesis in saltwater diatoms, green algae, and dinoflagellates (Wurster, 1968).

Residues

Twenty-four field-generated data points for 22 freshwater fish and invertebrate species are available, whereas 18 laboratory-generated data points for 16 fish and invertebrate species are available (Table 5). Freshwater fish species bioconcentration in the field was much greater than in laboratory tests, which may be due to a difference in the physical form of the toxicant between field and laboratory studies, the many additional trophic levels involved in field exposures, or a difference in lipid content of the tissues.

Bioconcentration factors are available for three saltwater invertebrate and nine fish species (Table 5). Odum, et al. (1969) fed fiddler crabs a diet of natural detritus containing DDT residues of 10 mg/kg. After five days, crabs fed DDT-contaminated detritus exhibited extremely poor coordination. They concluded that although no crabs died, such behavior would "almost certainly affect survival under natural conditions." After 11 days on the diet, concentrations of DDT and metabolites increase threefold in their tissues to 0.885 mg/kg. Odum, et al. (1969) speculated that the results of this study may help to explain the disappearance of this species from a Long Island marsh sprayed with DDT for more than 15 years.

Bioconcentration factors from laboratory tests with DDT and saltwater organisms ranged from 1,200 to 76,300 for fish and shellfish (Lowe, et al. 1970; Nimmo, et al. 1970). Eastern oysters provided BCF values from 42,400 in a 252-day exposure to 76,300 in a 168-day exposure (Lowe, et al. 1970). For saltwater organisms bioconcentration factors for DDT determined from animals captured from their natural environments were comparable with those from laboratory studies (Table 5). BCF values in these studies ranged from 4,750 times for Cancer magister to 46,500 times for the dwarf perch (Earnest and Benville, 1971).

Data for DDE in Table 5 pertaining to maximum permissible tissue concentrations indicate that long-term dietary dosage at 2.8 to 3 mg/kg DDE (wet weight) can have adverse effects on reproduction of mallards (Heath, et al. 1969; Haseltine, et al. 1974), black ducks (Longcore, et al. 1971; Longcore and Stendell, 1977), and screech owls (McLane and Hall, 1972). DDE has been found to constitute 50 to 90 percent of the DDT analogs present in fish (Jarvinen, et al. 1977).

Avian species that feed on saltwater animals containing DDT and metabolites (particularly DDE) have exhibited reductions in their reproductive capacity. For example, a colony of Bermuda petrels, a species which feeds primarily on cephalopods in the North Atlantic, suffered a significant decline in their population from 1958 to 1967 (Wurster, 1968). Analysis of unhatched eggs and dead chicks revealed an average concentration of 6.4 mg/kg DDT and metabolites (62 percent DDE). No data are available on the concentrations of DDT and metabolites in the cephalopods consumed by the petrels.

Studies have been conducted to evaluate the effects of DDT and metabolites in eggs of the brown pelican and the subsequent decrease in reproductive success. Blus, et al. (1974) reported that their reproductive success was normal only when concentrations of DDT (including metabolites) and the insecticide, dieldrin, were less than 2.5 mg/kg and 0.54 mg/kg, respectively. The DDE concentration causing shell thinning was estimated to be 0.5 mg/kg or less in eggs of brown pelicans (Blus, et al. 1972). Much higher concentrations in the eggs than concentrations that were fed for several months have been found for other species. Ten times higher concentrations were observed in black duck eggs (Longcore, et al. 1971; Longcore and Stendell, 1977) and almost eight times higher in sparrow hawk eggs (Lincer, 1975).

Anderson, et al. (1975) studied the breeding success of the brown pelican in relation to residues of DDT and metabolites in their eggs and in their major food source, the northern anchovy. Their analyses of data collected from 1969 to 1974 included the following observations: (1) residues of DDT and metabolites (the major compound was DDE) in northern anchovies dropped steadily from a mean of 3.4 mg/kg (wet weight) in 1969 to 0.15 mg/kg

in 1974; (2) during that same period, DDT and metabolites in intact eggs averaged 907 mg/kg (lipid weight) in 1969 to 97 mg/kg in 1974, and higher residues were associated with crushed eggs; (3) productivity of pelicans increased from a total of four young fledged in 1969 to 1,115 fledged in 1974, with a concurrent increase in eggshell thickness. Anderson, et al. (1975) stated that even the lowest concentration of DDT and metabolites in northern anchovies (0.15 mg/kg) and the subsequent 97 mg/kg concentration in pelican eggs were unacceptably high, because the pelican eggshell thickness was below normal and productivity was too low for population stability.

Dividing a BCF value by the percent lipid value for the same species provides a BCF value adjusted to 1 percent lipid content; this resultant BCF value is referred to as the normalized BCF. The geometric mean of normalized bioconcentration factors for DDT for freshwater and saltwater aquatic life is 17,870 (Table 5).

It is noteworthy that only one of the fish species listed in Table 5 is a species that belongs to the order Clupeiformes. Clupeids are a major food source for brown pelicans and are high in lipid content. Due to the lipophilic nature of DDT and its metaboltes, it is likely that these fishes would contain higher concentrations of the insecticide than would fishes of lower lipid content; indeed, the BCF for alewife, a clupeid, (1,296,666) is nearly two orders of magnitude higher than the geometric mean BCF. Therefore, the mean normalized bioconcentration factor of 17,870 may underestimate the bioconcentration factors likely to occur in clupeid species. Because no safe concentration for DDT and metabolites in food of pelicans is known and because the mean bioconcentration factor may be too low, the residue values based on these data may be underprotective.

Dividing the FDA action level of 5.0 mg/kg for fish by the geometric mean of normalized BCF values (17,870) and by a percent lipid value of 15 for freshwater species (see Guidelines) gives a freshwater residue value based on marketability for human consumption of 0.019 µg/l (Table 5). Dividing the FDA action level (5.0 mg/kg) by the geometric mean of normalized BCF values (17,870) and by a percent lipid value of 16 for saltwater species (see Guidelines) gives a saltwater residue value of 0.017 µg/l. Also based on marketability for human consumption, using the FDA action level and the highest BCF for edible portion of a consumed fish species (458,259 for lake trout for freshwater), a residue value of 0.011 µg/l is obtained for freshwater (Table 5). No appropriate BCF value for edible portion of a consumed fish species is available for saltwater.

A residue value for wildlife protection of 0.0010 µg/l is obtained for both freshwater and saltwater using the lowest maximum permissible tissue concentration of 0.15 mg/kg based on reduced productivity of the brown pelican (Anderson, et al. 1975). Average lipid content of pelican diets is unavailable. Clupeids usually constitute the major prey of pelicans, and the percent lipid value of the clupeid, northern anchovy, is 8 (Reintjes, 1980). The northern anchovy is in some areas a major food source of the brown pelican. Therefore, the percent lipid value of 8 was used for the calculation of the Final Residue Value. The value of 0.15 mg/kg divided by the geometric mean of normalized BCF values (17,870) and by a percent lipid value of 8 gives a residue value of 0.0010 µg/l (Table 5).

Selection of the lowest freshwater and saltwater residue values from the above calculations gives a Freshwater Final Residue Value of 0.0010 µg/l and a Saltwater Final Residue Value of 0.0010 µg/l. The Final Residue Values may be too high because they are based on a concentration which reduced the productivity of the brown pelican.

Miscellaneous

Table 6 contains additional data concerning the effect of DDT on 23 species of freshwater and 13 species of saltwater aquatic life. The values range from LC_{50} values for time periods that are either less or greater than specified in the Guidelines to physiological and behavioral effects. The lowest value in Table 6 is a hyperactive locomotor response observed by Ellgaard, et al. (1977) for the bluegill exposed at 0.008 µg/l. This value is slightly higher than the Freshwater Final Residue Value.

Results of acute toxicity tests shown in Table 6 indicate that the pinfish (Lagodon rhomboides) was the species most sensitive to DDT (48-hour LC_{50} = 0.32 µg/l,)(Lowe, undated). This is the lowest value of all acute values with fishes (Tables 1 and 6); however, this value is not below the Saltwater Final Acute Value of 0.13 µg/l. The LC_{50} values for other species in acute tests lasting less than 96 hours lie between 0.4 and 5.5 µg/l for DDT, and between 2.4 and 42 µg/l for TDE and DDE. No other data from Table 6 suggest any more sensitive effects or greater bioconcentration than that found in the previous tables.

Summary

Acute toxicity data for DDT are available for 18 freshwater invertebrate species; a wide range in species sensitivity was found, with acute values ranging from 0.18 to 1,800 µg/l. Acute toxicity tests on 24 freshwater fish species also showed a wide range of species sensitivity, with LC_{50} values ranging from 0.6 µg/l for yellow perch to 180 µg/l for goldfish. Few data are available concerning effects on freshwater plants, and those that are available indicate a wide range of concentrations at which effects occur.

A Freshwater Final Acute Value of 1.1 µg/l was obtained for DDT based on data for 42 species. A single chronic value of 0.74 µg/l DDT was obtained for the fathead minnow. Based on a maximum permissible tissue concentration

of 0.15 mg/kg for wildlife protection, the geometric mean of normalized bioconcentration factors (17,870), and a percent lipid value of 8, the Freshwater Final Residue Value for DDT is 0.0010 µg/l.

Acute toxicity data for DDT and six saltwater invertebrate species indicate that the brown shrimp, with a 96-hour LC_{50} of 0.14 µg/l is the most sensitive species of those tested. Acute tests on 11 saltwater fish species gave LC_{50} values ranging from 0.26 to 89 µg/l. No chronic data are available for any saltwater species. From limited data, saltwater plants appear to be much less sensitive than fish or invertebrate species to DDT.

A Saltwater Final Acute Value of 0.13 µg/l was obtained for DDT based on data for 17 species. No DDT Saltwater Final Chronic Value can be calculated because insufficient data are available. Based on a maximum permissible tissue concentration of 0.15 mg/kg, the geometric mean of normalized bioconcentration factors (17,870), and a percent lipid value of 8, the Saltwater Final Residue Value for DDT is 0.0010 µg/l.

It should be pointed out that the Final Residue Values may be too high because. Average lipid content of pelican diets is unavailable. Clupeids usually constitute the major prey of pelicans, and the percent lipid value of the clupeid, northern anchovy, is 8 (Reintjes, 1980). The northern anchovy is in some areas a major food source of the brown pelican. Therefore, the percent lipid value of 8 was used for the calculation of the Final Residue Value.

CRITERIA

DDT

For DDT and its metabolites the criterion to protect freshwater aquatic life as derived using the Guidelines is 0.0010 µg/l as a 24-hour average, and the concentration should not exceed 1.1 µg/l at any time.

For DDT and its metabolites the criterion to protect saltwater aquatic life as derived using the Guidelines is 0.0010 µg/l as a 24-hour average, and the concentration should not exceed 0.13 µg/l at any time.

TDE

The available data for TDE indicate that acute toxicity to freshwater aquatic life occurs at concentrations as low as 0.6 µg/l and would occur at lower concentrations among species that are more sensitive than those tested. No data are available concerning the chronic toxicity of TDE to sensitive freshwater aquatic life.

The available data for TDE indicate that acute toxicity to saltwater aquatic life occurs at concentrations as low as 3.6 µg/l and would occur at lower concentrations among species that are more senstive than those tested. No data are available concerning the chronic toxicity of TDE to sensitive saltwater aquatic life.

DDE

The available data for DDE indicate that acute toxicity to freshwater aquatic life occurs at concentrations as low as 1,050 µg/l and would occur at lower concentrations among species that are more sensitive than those tested. No data are available concerning the chronic toxicity of DDE to sensitive freshwater aquatic life.

The available data for DDE indicate that acute toxicity to saltwater aquatic life occurs at concentrations as low as 14 µg/l and would occur at lower concentrations among species that are more sensitive than those tested. No data are available concerning the chronic toxicity of DDE to sensitive saltwater aquatic life.

Table 1. Acute values for DDT and metabolites

Species	Method*	LC50/EC50 (ug/l)	Species Mean Acute Value (ug/l)	Reference
		FRESHWATER SPECIES		
		DDT		
Cladoceran, *Daphnia magna*	S, U	4	-	Macek & Sanders, 1970
Cladoceran, *Daphnia magna*	S, U	1.48	2.4	Priester, 1965
Cladoceran, *Daphnia pulex*	S, U	0.36	0.36	Sanders & Cope, 1966
Cladoceran, *Simocephalus serrulatus*	S, U	2.5	-	Sanders & Cope, 1966
Cladoceran, *Simocephalus serrulatus*	S, U	2.8	2.6	Sanders & Cope, 1966
Sowbug, *Asellus brevicaudus*	S, U	4	4.0	Sanders, 1972
Scud, *Gammarus fasciatus*	S, U	3.2	-	Sanders, 1972
Scud, *Gammarus fasciatus*	FT, U	0.8	-	Sanders, 1972
Scud, *Gammarus fasciatus*	S, U	1.8	1.7	Sanders, 1972
Scud, *Gammarus lacustris*	S, U	9	-	Gaufin, et al. 1965
Scud, *Gammarus lacustris*	S, U	1	3.0	Sanders, 1969
Seed shrimp, *Cypridopsis vidua*	S, U	54	54	Macek & Sanders, 1970
Glass shrimp, *Palaemonetes kadiakensis*	S, U	4.2	-	Macek & Sanders, 1970

Table 1. (Continued)

Species	Method[a]	LC50/EC50 (µg/l)	Species Mean Acute Value (µg/l)	Reference
Glass shrimp, *Palaemonetes kadiakensis*	S, U	2.3	-	Sanders, 1972
Glass shrimp, *Palaemonetes kadiakensis*	FT, U	3.5	3.2	Sanders, 1972
Crayfish, *Orconectes nais*	S, U	100	-	Sanders, 1972
Crayfish (1-day-old), *Orconectes nais*	S, U	0.30	-	Sanders, 1972
Crayfish (1-wk-old), *Orconectes nais*	S, U	0.18	-	Sanders, 1972
Crayfish (2-wk-old), *Orconectes nais*	S, U	0.20	-	Sanders, 1972
Crayfish (3-wk-old), *Orconectes nais*	S, U	0.24	-	Sanders, 1972
Crayfish (5-wk-old), *Orconectes nais*	S, U	0.90	-	Sanders, 1972
Crayfish (8-wk-old), *Orconectes nais*	S, U	28	-	Sanders, 1972
Crayfish (10-wk-old), *Orconectes nais*	S, U	30	1.9	Sanders, 1972
Crayfish, *Procambarus acutus*	S, U	3	3	Albaugh, 1972
Mayfly, *Ephemerella grandis*	S, U	25	25	Gaufin, et al. 1965
Stonefly, *Acroneuria pacifica*	S, U	410	-	Gaufin, et al. 1961
Stonefly, *Acroneuria pacifica*	S, U	320	362	Gaufin, et al. 1965

Table 1. (Continued)

Species	Method[a]	LC50/EC50 (µg/l)	Species Mean Acute Value (µg/l)	Reference
Stonefly, *Claassenia sabulosa*	S, U	3.5	3.5	Sanders & Cope, 1968
Stonefly, *Pteronarcella badia*	S, U	1.9	1.9	Sanders & Cope, 1968
Stonefly, *Pteronarcys californica*	S, U	1,800	-	Gaufin, et al. 1965
Stonefly, *Pteronarcys californica*	S, U	7	-	Sanders & Cope, 1968
Stonefly, *Pteronarcys californica*	S, U	560	192	Gaufin, et al. 1961
Caddisfly, *Arctopsyche grandis*	S, U	175	175	Gaufin, et al. 1965
Caddisfly, *Hydropsyche californica*	S, U	48	48	Gaufin, et al. 1965
Planarian, *Polycelis felina*	S, U	1,230	1,230	Kouyoumjian & Uglow, 1974
Coho salmon, *Oncorhynchus kisutch*	S, U	44	-	Katz, 1961
Coho salmon, *Oncorhynchus kisutch*	S, U	4	-	Macek & McAllister, 1970
Coho salmon, *Oncorhynchus kisutch*	S, U	11.3	-	Post & Schroeder, 1971
Coho salmon, *Oncorhynchus kisutch*	S, U	18.5	-	Post & Schroeder, 1971
Coho salmon, *Oncorhynchus kisutch*	S, U	13	14	Schaumburg, et al. 1967
Chinook salmon, *Oncorhynchus tshawytscha*	S, U	11.5	12	Katz, 1961

Table 1. (Continued)

Species	Method[a]	LC50/EC50 (µg/l)	Species Mean Acute Value (µg/l)	Reference
Cutthroat trout, *Salmo clarki*	S, U	0.85	-	Post & Schroeder, 1971
Cutthroat trout, *Salmo clarki*	S, U	1.37	1.1	Post & Schroeder, 1971
Rainbow trout, *Salmo gairdneri*	S, U	42	-	Katz, 1961
Rainbow trout, *Salmo gairdneri*	S, U	7	-	Macek & McAllister, 1970
Rainbow trout, *Salmo gairdneri*	S, U	7.2	-	Macek & Sanders, 1970
Rainbow trout, *Salmo gairdneri*	S, U	14	-	Marking, 1966
Rainbow trout, *Salmo gairdneri*	S, U	4.6	-	Marking, 1966
Rainbow trout, *Salmo gairdneri*	S, U	7.2	-	Marking, 1966
Rainbow trout, *Salmo gairdneri*	S, U	15	-	Marking, 1966
Rainbow trout, *Salmo gairdneri*	S, U	17	-	Marking, 1966
Rainbow trout, *Salmo gairdneri*	S, U	13	-	Marking, 1966
Rainbow trout, *Salmo gairdneri*	S, U	12	-	Marking, 1966
Rainbow trout, *Salmo gairdneri*	S, U	2.4	-	Marking, 1966
Rainbow trout, *Salmo gairdneri*	S, U	1.7	-	Post & Schroeder, 1971

Table 1. (Continued)

Species	Method[a]	LC50/EC50 (µg/l)	Species Mean Acute Value (µg/l)	Reference
Rainbow trout (fry), *Salmo gairdneri*	FT, U	2.4	7.8	Tooby, et al. 1975
Brown trout (fingerling), *Salmo trutta*	S, U	17.5	-	King, 1962
Brown trout, *Salmo trutta*	S, U	2	-	Macek & McAllister, 1970
Brown trout, *Salmo trutta*	S, U	10.9	7.3	Marking, 1966
Brook trout, *Salvelinus fontinalis*	S, U	7.2	-	Marking, 1966
Brook trout, *Salvelinus fontinalis*	S, U	17	-	Marking, 1966
Brook trout, *Salvelinus fontinalis*	S, U	20	-	Marking, 1966
Brook trout, *Salvelinus fontinalis*	S, U	1.8	-	Marking, 1966
Brook trout, *Salvelinus fontinalis*	S, U	7.4	-	Post & Schroeder, 1971
Brook trout, *Salvelinus fontinalis*	S, U	11.9	8.5	Post & Schroeder, 1971
Lake trout, *Salvelinus namaycush*	S, U	9.1	-	Marking, 1966
Lake trout, *Salvelinus namaycush*	S, U	9.5	9.3	Marking, 1966
Northern pike, *Esox lucius*	S, U	1.7	1.7	Marking, 1966
Goldfish, *Carassius auratus*	S, U	21	-	Macek & McAllister, 1970

Table 1. (Continued)

Species	Method*	LC50/EC50 (µg/l)	Species Mean Acute Value (µg/l)	Reference
Goldfish, *Carassius auratus*	S, U	76	-	Marking, 1966
Goldfish, *Carassius auratus*	S, U	27	-	Marking, 1966
Goldfish, *Carassius auratus*	S, U	32	-	Marking, 1966
Goldfish, *Carassius auratus*	S, U	180	-	Marking, 1966
Goldfish, *Carassius auratus*	S, U	40	-	Marking, 1966
Goldfish, *Carassius auratus*	S, U	35	-	Marking, 1966
Goldfish, *Carassius auratus*	S, U	21	-	Marking, 1966
Goldfish, *Carassius auratus*	S, U	36	40	Henderson, et al. 1959
Northern redbelly dace, *Chrosomus eos*	S, U	68	68	Marking, 1966
Carp, *Cyprinus carpio*	S, U	10	-	Macek & McAllister, 1970
Carp, *Cyprinus carpio*	S, U	9.2	-	Marking, 1966
Carp, *Cyprinus carpio*	S, U	4.0	-	Marking, 1966
Carp, *Cyprinus carpio*	S, U	11.3	-	Marking, 1966
Carp, *Cyprinus carpio*	S, U	12	-	Marking, 1966

Table 1. (Continued)

Species	Method[a]	LC50/EC50 (µg/l)	Species Mean Acute Value (µg/l)	Reference
Carp, *Cyprinus carpio*	S, U	6.9	-	Marking, 1966
Carp, *Cyprinus carpio*	S, U	6	8.0	Marking, 1966
Fathead minnow, *Pimephales promelas*	FT, M	48	-	Jarvinen, et al. 1977
Fathead minnow, *Pimephales promelas*	S, U	19	-	Macek & McAllister, 1970
Fathead minnow, *Pimephales promelas*	S, U	19.9	-	Macek & Sanders, 1970
Fathead minnow, *Pimephales promelas*	S, U	58	-	Priester, 1965
Fathead minnow, *Pimephales promelas*	S, U	42	-	Henderson, et al. 1959
Fathead minnow, *Pimephales promelas*	S, U	45	-	Henderson, et al. 1959
Fathead minnow, *Pimephales promelas*	S, U	26	-	Henderson, et al. 1959
Fathead minnow, *Pimephales promelas*	S, U	26	48	Henderson, et al. 1959
Black bullhead, *Ictalurus melas*	S, U	5	-	Macek & McAllister, 1970
Black bullhead, *Ictalurus melas*	S, U	42	-	Marking, 1966
Black bullhead, *Ictalurus melas*	S, U	23.5	-	Marking, 1966
Black bullhead, *Ictalurus melas*	S, U	17	-	Marking, 1966

Table 1. (Continued)

Species	Method[a]	LC50/EC50 (µg/l)	Species Mean Acute Value (µg/l)	Reference
Black bullhead, *Ictalurus melas*	S, U	20	18	Marking, 1966
Channel catfish, *Ictalurus punctatus*	S, U	16	-	Macek & McAllister, 1970
Channel catfish, *Ictalurus punctatus*	S, U	17.4	-	Macek & Sanders, 1970
Channel catfish, *Ictalurus punctatus*	S, U	17.5	-	Marking, 1966
Channel catfish, *Ictalurus punctatus*	S, U	17.5	17	Marking, 1966
Guppy, *Poecilia reticulata*	S, U	19.5	-	King, 1962
Guppy, *Poecilia reticulata*	S, U	56	33	Henderson, et al. 1959
Brook stickleback, *Culaea inconstans*	S, U	67	67	Marking, 1966
Green sunfish, *Lepomis cyanellus*	S, U	2.8	-	Marking, 1966
Green sunfish, *Lepomis cyanellus*	S, U	3	-	Marking, 1966
Green sunfish, *Lepomis cyanellus*	S, U	3.9	-	Marking, 1966
Green sunfish, *Lepomis cyanellus*	S, U	6.7	-	Marking, 1966
Green sunfish, *Lepomis cyanellus*	S, U	6.4	-	Marking, 1966
Green sunfish, *Lepomis cyanellus*	S, U	4.4	-	Marking, 1966

Table 1. (Continued)

Species	Method[a]	LC50/EC50 (µg/l)	Species Mean Acute Value (µg/l)	Reference
Green sunfish, *Lepomis cyanellus*	S, U	3.6	-	Marking, 1966
Green sunfish *Lepomis cyanellus*	S, U	5	4.3	Marking, 1966
Pumpkinseed, *Lepomis gibbosus*	S, U	7.5	-	Marking, 1966
Pumpkinseed, *Lepomis gibbosus*	S, U	6.7	-	Marking, 1966
Pumpkinseed, *Lepomis gibbosus*	S, U	2.8	-	Marking, 1966
Pumpkinseed, *Lepomis gibbosus*	S, U	3.6	-	Marking, 1966
Pumpkinseed, *Lepomis gibbosus*	S, U	1.8	3.9	Marking, 1966
Bluegill, *Lepomis macrochirus*	S, U	8	-	Macek & McAllister, 1970
Bluegill, *Lepomis macrochirus*	S, U	9.5	-	Macek & Sanders, 1970
Bluegill, *Lepomis macrochirus*	S, U	4.3	-	Marking, 1966
Bluegill, *Lepomis macrochirus*	S, U	3.6	-	Marking, 1966
Bluegill, *Lepomis macrochirus*	S, U	1.7	-	Marking, 1966
Bluegill, *Lepomis macrochirus*	S, U	1.2	-	Marking, 1966
Bluegill, *Lepomis macrochirus*	S, U	3	-	Marking, 1966

Table 1. (Continued)

Species	Method*	LC50/EC50 (µg/l)	Species Mean Acute Value (µg/l)	Reference
Bluegill, *Lepomis macrochirus*	S, U	4.6	-	Marking, 1966
Bluegill, *Lepomis macrochirus*	S, U	7	-	Marking, 1966
Bluegill, *Lepomis macrochirus*	S, U	9.4	-	Marking, 1966
Bluegill, *Lepomis macrochirus*	S, U	7	-	Marking, 1966
Bluegill, *Lepomis macrochirus*	S, U	2.8	-	Marking, 1966
Bluegill, *Lepomis macrochirus*	S, U	21	4.9	Henderson, et al. 1959
Longear sunfish, *Lepomis megalotis*	S, U	4.9	-	Marking, 1966
Longear sunfish, *Lepomis megalotis*	S, U	12.5	7.8	Marking, 1966
Redear sunfish, *Lepomis microlophus*	S, U	5	5.0	Macek & McAllister, 1970
Largemouth bass, *Micropterus salmoides*	S, U	2	-	Macek & McAllister, 1970
Largemouth bass, *Micropterus salmoides*	S, U	1.8	-	Macek & Sanders, 1970
Largemouth bass, *Micropterus salmoides*	S, U	0.8	1.4	Marking, 1966
Yellow perch, *Perca flavescens*	S, U	9	-	Macek & McAllister, 1970
Yellow perch, *Perca flavescens*	S, U	0.8	-	Marking, 1966

Table 1. (Continued)

Species	Method[a]	LC50/EC50 (µg/l)	Species Mean Acute Value (µg/l)	Reference
Yellow perch, *Perca flavescens*	S, U	0.6	-	Marking, 1966
Yellow perch, *Perca flavescens*	S, U	1.5	1.6	Marking, 1966
Freshwater drum, *Aplodinotus grunniens*	S, U	10	10	Marking, 1966
		TDE		
Cladoceran, *Daphnia pulex*	S, U	3.2	3.2	Sanders & Cope, 1966
Cladoceran, *Simocephalus serrulatus*	S, U	4.5	-	Sanders & Cope, 1966
Cladoceran, *Simocephalus serrulatus*	S, U	5.2	4.8	Sanders & Cope, 1966
Sowbug, *Asellus brevicaudus*	S, U	10	10	Sanders, 1972
Scud, *Gammarus fasciatus*	S, U	0.6	-	Sanders, 1972
Scud, *Gammarus fasciatus*	S, U	0.86	0.72	Sanders, 1972
Scud, *Gammarus lacustris*	S, U	0.64	0.64	Sanders, 1969
Glass shrimp, *Palaemonetes kadiakensis*	S, U	0.68	0.68	Sanders, 1972
Stonefly, *Pteronarcys californica*	S, U	380	380	Sanders & Cope, 1968
Planarian, *Polycelis felina*	S, U	740	740	Kouyoumjian & Uglow, 1974

Table 1. (Continued)

Species	Method[a]	LC50/EC50 (µg/l)	Species Mean Acute Value (µg/l)	Reference
		DDE		
Planarian, *Polycelis felina*	S, U	1,050	1,050	Kouyoumjian & Uglow, 1974
		SALTWATER SPECIES		
		DDT		
Eastern oyster, *Crassostrea virginica*	FT, U	7.0	-	Lowe, undated
Eastern oyster, *Crassostrea virginica*	FT, U	9.0	7.9	Lowe, undated
Brown shrimp, *Penaeus aztecus*	FT, M	0.14	0.14	Schimmel & Patrick, 1975
Grass shrimp, *Palaemonetes vulgaris*	S, U	2.0	2.0	Eisler, 1969
Sand shrimp, *Crangon septemspinosa*	S, U	0.6	0.6	Eisler, 1969
Korean shrimp, *Palaemon macrodactylus*	S, U	0.86	-	Schoettger, 1970
Korean shrimp, *Palaemon macrodactylus*	FT, U	0.17	0.38	Schoettger, 1970
Hermit crab, *Pagurus longicarpus*	S, U	6.0	6.0	Eisler, 1969
American eel, *Anguilla rostrata*	S, U	4.0	4.0	Eisler, 1970b
Chinook salmon, *Oncorhynchus tshawytscha*	FT, U	0.68	0.68	Schoettger, 1970
Mummichog, *Fundulus heteroclitus*	S, U	3.0	-	Eisler, 1970a

Table 1. (Continued)

Species	Method[a]	LC50/EC50 (µg/l)	Species Mean Acute Value (µg/l)	Reference
Mummichog, *Fundulus heteroclitus*	S, U	5.0	3.9	Eisler, 1970b
Striped killifish, *Fundulus majalis*	S, U	1.0	1.0	Eisler, 1970b
Atlantic silverside, *Menidia menidia*	S, U	0.4	0.4	Eisler, 1970b
Striped bass, *Morone saxatilis*	FT, U	0.53	0.53	Korn & Earnest, 1974
Shiner perch, *Cymatogaster aggregata*	S, U	7.6	-	Earnest & Benville, 1971
Shiner perch, *Cymatogaster aggregata*	FT, U	0.45	1.8	Earnest & Benville, 1971
Dwarf perch, *Micrometrus minimus*	S, U	4.6	-	Earnest & Benville, 1971
Dwarf perch, *Micrometrus minimus*	FT, U	0.26	1.1	Earnest & Benville, 1971
Bluehead, *Thalassoma bifasciatum*	S, U	7.0	7.0	Eisler, 1970b
Striped mullet, *Mugil cephalus*	S, U	0.9	-	Eisler, 1970b
Striped mullet, *Mugil cephalus*	S, U	3.0	1.6	Eisler, 1970b
Northern puffer, *Sphaeroides maculatus*	S, U	89	89	Eisler, 1970b
		TDE		
Eastern oyster, *Crassostrea virginica*	FT, U	25	25	Lowe, undated
Korean shrimp, *Palaemon macrodactylus*	S, U	8.3	-	Schoettger, 1970

Table 1. (Continued)

Species	Method*	LC50/EC50 (µg/l)	Species Mean Acute Value (µg/l)	Reference
Korean shrimp, *Palaemon macrodactylus*	FT, U	1.6	3.6	Schoettger, 1970
Striped bass, *Morone saxatilis*	FT, U	2.5	2.5	Korn & Earnest, 1974
		DDE		
Eastern oyster, *Crassostrea virginica*	FT, U	14	14	Lowe, undated

*S = static; FT = flow-through; M = measured; U = unmeasured

Table 2. Chronic values for DDT (Jarvinen, et al. 1977)

Species	Test*	Limits (µg/l)	Chronic Value (µg/l)
	FRESHWATER SPECIES		
Fathead minnow, *Pimephales promelas*	LC	0.37-1.48	0.74

* LC = life cycle or partial life cycle

Acute-Chronic Ratio

Species	Acute Value (µg/l)	Chronic Value (µg/l)	Ratio
Fathead minnow *Pimephales promelas*	48	0.74	65

Table 3. Species mean acute values and acute-chronic ratios for DDT and metabolites

Rank*	Species	Species Mean Acute Value (µg/l)	Species Mean Acute-Chronic Ratio
	FRESHWATER SPECIES		
	DDT		
42	Planarian, *Polycelis felina*	1,230	-
41	Stonefly, *Acroneuria pacifica*	362	-
40	Stonefly, *Pteronarcys californica*	192	-
39	Caddisfly, *Arctopsyche grandis*	175	-
38	Northern redbelly dace, *Chrosomus eos*	68	-
37	Brook stickleback, *Culaea inconstans*	67	-
36	Seed shrimp, *Cypridopsis vidua*	54	-
35	Caddisfly, *Hydropsyche california*	48	-
34	Fathead minnow, *Pimephales promelas*	48	65
33	Goldfish, *Carassius auratus*	40	-
32	Guppy, *Poecilia reticulata*	33	-
31	Mayfly, *Ephemerella grandis*	25	-
30	Black bullhead, *Ictalurus melas*	18	-

Table 3. (Continued)

Rank*	Species	Species Mean Acute Value (µg/l)	Species Mean Acute-Chronic Ratio
29	Channel catfish, *Ictalurus punctatus*	17	-
28	Coho salmon, *Oncorhynchus kisutch*	14	-
27	Chinook salmon, *Oncorhynchus tshawytscha*	12	-
26	Freshwater drum, *Aplodinotus grunniens*	10	-
25	Lake trout, *Salvelinus namaycush*	9.3	-
24	Brook trout, *Salvelinus fontinalis*	8.5	-
23	Carp, *Cyprinus carpio*	8.0	-
22	Rainbow trout, *Salmo gairdneri*	7.8	-
21	Longear sunfish, *Lepomis megalotis*	7.8	-
20	Brown trout, *Salmo trutta*	7.3	-
19	Redear sunfish, *Lepomis microlophus*	5.0	-
18	Bluegill, *Lepomis macrochirus*	4.9	-
17	Green sunfish, *Lepomis cyanellus*	4.3	-
16	Sowbug, *Asellus brevicaudus*	4.0	-

Table 3. (Continued)

Rank*	Species	Species Mean Acute Value (µg/l)	Species Mean Acute-Chronic Ratio
15	Pumpkinseed, *Lepomis gibbosus*	3.9	-
14	Stonefly, *Claassenia sabulosa*	3.5	-
13	Glass shrimp, *Palaemonetes kadiakensis*	3.2	-
12	Crayfish, *Procambarus acutus*	3.0	-
11	Scud, *Gammarus lacustris*	3.0	-
10	Cladoceran, *Simocephalus serrulatus*	2.6	-
9	Cladoceran, *Daphnia magna*	2.4	-
8	Crayfish, *Orconectes nais*	1.9	-
7	Stonefly, *Pteronarcella badia*	1.9	-
6	Northern pike, *Esox lucius*	1.7	-
5	Scud, *Gammarus fasciatus*	1.7	-
4	Yellow perch, *Perca flavescens*	1.6	-
3	Largemouth bass, *Micropterus salmoides*	1.4	-
2	Cutthroat trout, *Salmo clarki*	1.1	-

Table 3. (Continued)

Rank[a]	Species	Species Mean Acute Value (µg/l)	Species Mean Acute-Chronic Ratio
1	Cladoceran, *Daphnia pulex*	0.36	-
	TDE		
8	Planarian, *Polycelis felina*	740	-
7	Stonefly, *Pteronarcys californica*	380	-
6	Sowbug, *Asellus brevicaudus*	10	-
5	Cladoceran, *Simocephalus serrulatus*	4.8	-
4	Cladoceran, *Daphnia pulex*	3.2	-
3	Scud, *Gammarus fasciatus*	0.72	-
2	Glass shrimp, *Palaemonetes kadiakensis*	0.68	-
1	Scud, *Gammarus lacustris*	0.64	-
	DDE		
1	Planarian, *Polycelis felina*	1,050	-
	SALTWATER SPECIES		
	DDT		
17	Northern puffer, *Sphaeroides maculatus*	89	-

Table 3. (Continued)

Rank*	Species	Species Mean Acute Value (µg/l)	Species Mean Acute-Chronic Ratio
16	Eastern oyster, *Crassostrea virginica*	7.9	-
15	Bluehead, *Thalassoma bifasciatum*	7.0	-
14	Hermit crab, *Pagurus longicarpus*	6.0	-
13	American eel, *Anguilla rostrata*	4.0	-
12	Mummichog, *Fundulus heteroclitus*	3.9	-
11	Grass shrimp, *Palaemonetes pugio*	2.0	-
10	Shiner perch, *Cymatogaster aggregata*	1.8	-
9	Striped mullet, *Mugil cephalus*	1.6	-
8	Dwarf perch, *Micrometrus minimus*	1.1	-
7	Striped killifish, *Fundulus majalis*	1.0	-
6	Chinook salmon, *Oncorhynchus tshawytscha*	0.68	-
5	Sand shrimp, *Crangon septemspinosa*	0.6	-
4	Striped bass, *Morone saxatilis*	0.53	-
3	Atlantic silverside, *Menidia menidia*	0.4	-

Table 3. (Continued)

Rank*	Species	Species Mean Acute Value (µg/l)	Species Mean Acute-Chronic Ratio
2	Korean shrimp, *Palaemon macrodactylus*	0.38	-
1	Brown shrimp, *Penaeus aztecus*	0.14	-
	TDE		
3	Eastern oyster, *Crassostrea virginica*	25	-
2	Korean shrimp, *Palaemon macrodactylus*	3.6	-
1	Striped bass, *Morone saxatilis*	2.5	-
	DDE		
1	Eastern oyster, *Crassostrea virginica*	14	-

*Ranked from least sensitive to most sensitive based on species mean acute value.

Freshwater Final Acute Value for DDT = 1.1 µg/l

Saltwater Final Acute Value for DDT = 0.13 µg/l

Table 4. Plant values for DDT

Species	Effect	Result (µg/l)	Reference
	FRESHWATER SPECIES		
Alga, *Anacystis nidulans*	Growth	800	Batterton, et al. 1972
Alga, *Chlorella* sp.	Growth and morphology	0.3	Sodergren, 1968
Alga, *Scenedesmus quadricauda*	Growth	100	Stadnyk, et al. 1971
Alga, *Selenastrum capricornutum*	Photosynthesis	3.6	Lee, et al. 1976
	SALTWATER SPECIES		
Diatom, *Skeletonema costatum*	Reduced photosynthesis (1-day)	10	Wurster, 1968
Coccolithophore, *Coccolithus huxleyi*	Reduced photosynthesis (1-day)	10	Wurster, 1968
Green alga, *Pyramimonas* sp.	Reduced photosynthesis (1-day)	10	Wurster, 1968
Neritic dinoflagellate, *Peridinium trochoideum*	Reduced photosynthesis (1-day)	10	Wurster, 1968

Table 5. Residues for DDT and metabolites

Species	Tissue	Lipid (%)	Bioconcentration Factor	Duration (days)	Reference
		FRESHWATER SPECIES			
			DDT		
Coontail, *Ceratophyllum demersum*	-	-	1,950	30	Eberhardt, et al. 1971
Cladophora, *Cladophora* sp.	-	-	21,580	30	Eberhardt, et al. 1971
Duckweed, *Lemna minor*	-	-	1,210	30	Eberhardt, et al. 1971
Water milfoil, *Myriophyllum* sp.	-	-	1,870	30	Eberhardt, et al. 1971
Curly leaf pondweed, *Potamogeton crispus*	-	-	14,280	30	Eberhardt, et al. 1971
Narrow-leaf pondweed, *Potamogeton foliosus*	-	-	781	30	Eberhardt, et al. 1971
Sago pondweed, *Potamogeton pectinatus*	-	-	6,360	30	Eberhardt, et al. 1971
Soft stem bulrush, *Scirpus validus*	-	-	495	30	Eberhardt, et al. 1971
Bur reed, *Sparganium eurycarpum*	-	-	623	30	Eberhardt, et al. 1971
Bladderwort, *Utricularia vulgaris*	-	-	2,200	30	Eberhardt, et al. 1971
Mussel, *Anodonta grandis*	Whole body	1.0	2,400	21	Bedford & Zabik, 1973
Clams (five species composite), *Lampsilis siliquoidea* *Lampsilis ventricosa* *Lasmigona costata* *Fusconaia flava* *Ligumia recta*	Whole body	1.0	12,500	56	Jarvinen, et al. 1977

Table 5. (Continued)

Species	Tissue	Lipid (%)	Bioconcentration Factor	Duration (days)	Reference
Cladoceran, *Daphnia magna*	Whole body	-	9,923*	14	Priester, 1965
Freshwater prawn, *Palaemonetes paludosus*	Whole body	-	7,000	Field	Kollpinski, et al. 1971
Crayfish, *Orconectes punctata*	-	-	5,060	30	Eberhardt, et al. 1971
Crayfish, *Procambarus alleni*	Whole body	-	1,947	Field	Kollpinski, et al. 1971
Mayfly (nymph), *Ephemera danica*	Whole body	-	4,075	5	Sodergren & Swenson, 1973
Dragonfly (nymph), *Tetragoneuria* sp.	Whole body	-	2,700	20	Wilkes & Weiss, 1971
Bloodworm, *Tendipes* sp.	-	-	4,750	30	Eberhardt, et al. 1971
Red leech, *Erpobdella punctata*	-	-	7,520	30	Eberhardt, et al. 1971
Alewife, *Alosa pseudoharengus*	Whole body	10.0	1,296,666	Field	Reinert, 1970
Lake herring, *Coregnus artedi*	Whole body	3.3	2,236,666	Field	Reinert, 1970
Lake whitefish, *Coregonus clupeaformis*	Whole body	7.6	260,000	Field	Reinert, 1970
Bloater, *Coregonus hoyi*	Whole body	20.0	2,870,000	Field	Reinert, 1970
Kiyi, *Coregonus kiyi*	Whole body	-	4,426,666	Field	Reinert, 1970
Cisco, *Coregonus* sp.	Muscle	6.4	368,777	Field	Miles & Harris, 1973

Table 5. (Continued)

Species	Tissue	Lipid (%)	Bioconcentration Factor	Duration (days)	Reference
Coho salmon, *Oncorhynchus kisutch*	Whole body	-	1,563,571	Field	Lake Michigan Interstate Pestic. Comm., 1972
Rainbow trout, *Salmo gairdneri*	Muscle	1.0	11,607	Field	Miles & Harris, 1973
Rainbow trout, *Salmo gairdneri*	Whole body	6.6	38,642	84	Reinert, et al. 1974
Brown trout, *Salmo trutta*	Muscle	1.8	45,357	Field	Miles & Harris, 1973
Lake trout, *Salvelinus namaycush*	Muscle	4.6	458,259	Field	Miles & Harris, 1973
Lake trout, *Salvelinus namaycush*	Whole body	11.0	1,168,333	Field	Reinert, 1970
Lake trout, *Salvelinus namaycush*	Whole body	-	47,428	152	Reinert & Stone, 1974
American smelt, *Osmerus mordax*	Whole body	3.9	770,000	Field	Reinert, 1970
Carp, *Cyprinus carpio*	Whole body	6.2	640,000	Field	Reinert, 1970
Common shiner (composite), *Notropis cornutus* Northern redbelly dace, *Chrosomus eos*	Whole body	-	363,000	40	Hamelink, et al. 1971
Fathead minnow, *Pimephales promelas*	Whole body	3.1	99,000	266	Jarvinen, et al. 1977
White sucker, *Catostomus commersoni*	Muscle	2.8	110,000	Field	Miles & Harris, 1973
White sucker, *Catostomus commersoni*	Whole body	2.8	96,666	Field	Reinert, 1970
Trout-perch, *Percopsis omiscomaycus*	Whole body	-	313,333	Field	Reinert, 1970

Table 5. (Continued)

Species	Tissue	Lipid (%)	Bioconcentration Factor	Duration (days)	Reference
Flagfish, *Jordanella floridae*	Whole body	-	14,526	Field	Kolipinski, et al. 1971
Mosquitofish, *Gambusia affinis*	Whole body	-	21,411	Field	Kolipinski, et al. 1971
Rock bass, *Ambloplites rupestris*	Muscle	4.0	17,500	Field	Miles & Harris, 1973
Green sunfish, *Lepomis cyanellus*	Whole body	-	17,500	15	Sanborn, et al. 1975
Green sunfish (composite), *Lepomis cyanellus* Pumpkinseed, *Lepomis gibbosus*	Whole body	-	59,210	80	Hamelink, et al. 1971
Bluegill, *Lepomis macrochirus*	Muscle	4.0	16,071	Field	Miles & Harris, 1973
Largemouth bass (young of year), *Micropterus salmoides*	Whole body	-	317,000	40	Hamelink, et al. 1971
Yellow perch, *Perca flavescens*	Whole body	7.9	1,073,333	Field	Reinert, 1970
Slimy sculpin, *Cottus cognatus*	Whole body	-	763,333	Field	Reinert, 1970
			DDE		
Zooplankton (mixed), *Daphnia* sp. *Keratella* sp.	Whole body	-	63,500	21	Hamelink & Waybrant, 1976
Rainbow trout, *Salmo gairdneri*	Whole body	-	181,000	108	Hamelink & Waybrant, 1976
Bluegill, *Lepomis macrochirus*	Whole body	-	110,000	60	Hamelink & Waybrant, 1976

Table 5. (Continued)

Species	Tissue	Lipid (%)	Bioconcentration Factor	Duration (days)	Reference
		SALTWATER SPECIES**			
			DDT		
Eastern oyster, *Crassostrea virginica*	Whole body	-	42,400	252	Lowe, et al. 1970
Eastern oyster, *Crassostrea virginica*	Whole body	-	76,300	168	Lowe, et al. 1970
Pink shrimp, *Penaeus duorarum*	Whole body	-	1,200	56	Nimmo, et al. 1970
Market crab, *Cancer magister*	Whole body	1.3	14,250	Field	Earnest & Benville, 1971
Market crab, *Cancer magister*	Whole body	1.3	4,750	Field	Earnest & Benville, 1971
Atlantic croaker, *Micropogon undulatus*	Whole body	-	16,000	21-35	Hansen & Wilson, 1970
Shiner perch, *Cymatogaster aggregata*	Whole body	3.4	43,250	Field	Earnest & Benville, 1971
Shiner perch, *Cymatogaster aggregata*	Whole body	3.4	34,750	Field	Earnest & Benville, 1971
Dwarf perch, *Micrometrus minimus*	Whole body	6.4	46,500	Field	Earnest & Benville, 1971
Dwarf perch, *Micrometrus minimus*	Whole body	6.4	37,000	Field	Earnest & Benville, 1971
White perch, *Phanerodon furcatus*	Whole body	2.8	22,250	Field	Earnest & Benville, 1971
White perch, *Phanerodon furcatus*	Whole body	2.8	29,250	Field	Earnest & Benville, 1971
Pile perch, *Raccochilus vacca*	Whole body	4.4	26,750	Field	Earnest & Benville, 1971
Pile perch, *Raccochilus vacca*	Whole body	4.4	32,500	Field	Earnest & Benville, 1971

Table 5. (Continued)

Species	Tissue	Lipid (%)	Bioconcentration Factor	Duration (days)	Reference
Staghorn sculpin, *Leptocotius armatus*	Whole body	1.9	17,000	Field	Earnest & Benville, 1971
Staghorn sculpin, *Leptocotius armatus*	Whole body	1.9	22,250	Field	Earnest & Benville, 1971
Speckled sanddab, *Citharichthys stigmaeus*	Whole body	2.7	15,250	Field	Earnest & Benville, 1971
Speckled sanddab, *Citharichthys stigmaeus*	Whole body	2.7	12,250	Field	Earnest & Benville, 1971
English sole, *Parophrys vetulus*	Whole body	2.0	20,000	Field	Earnest & Benville, 1971
English sole, *Parophrys vetulus*	Whole body	2.0	13,000	Field	Earnest & Benville, 1971
Starry flounder, *Platichthys stellatus*	Whole body	2.5	24,750	Field	Earnest & Benville, 1971
Starry flounder, *Platichthys stellatus*	Whole body	2.5	23,750	Field	Earnest & Benville, 1971

* Value converted from dry weight to wet weight basis.

**Data include metabolites when given.

Maximum Permissible Tissue Concentration

Action Level or Effect	Concentration (mg/kg)	Reference
Fish	5.0	U.S. FDA Guideline 7420.08, 1978
Reduced productivity, Brown pelican, *Pelecanus occidentalis*	0.15	Anderson, et al. 1975

Table 5. (Continued)

Maximum Permissible Tissue Concentration

Action Level or Effect	Concentration (mg/kg)	Reference
Eggshell thinning, Brown pelican, *Pelecanus occidentalis*	0.5	Blus, et al. 1972, 1974
Inhibition of Na^+-K^+ ATPase, Rainbow trout, *Salmo gairdneri*	2.75	Campbell, et al. 1974
Reduced duckling survival, Black duck, *Anas rubripes*	2.8	Longcore & Stendell, 1977
Reduced survival, Sparrow hawk, *Falco sparverius*	2.8	Porter & Wiemeyer, 1972
Eggshell thinning, Screech owl, *Otus asio*	2.8	McLane & Hall, 1972
Eggshell thinning, Mallard, *Anas platyrhynchos*	3.0*	Haseltine, et al. 1974
Eggshell thinning, Mallard, *Anas platyrhynchos*	3.0*	Heath, et al. 1969
Eggshell thinning, Black duck, *Anas rubripes*	3.0*	Longcore, et al. 1971
Eggshell thinning, Sparrow hawk, *Falco sparverius*	3.0	Lincer, 1975
Reduced sac fry survival, Cutthroat trout, *Salmo clarki*	3	Allison, et al. 1963
Reduced fry survival, Brown trout, *Salmo trutta*	3.4	Burdick, et al. 1972

Table 5. (Continued)

Maximum Permissible Tissue Concentration

Action Level or Effect	Concentration (mg/kg)	Reference
Reduced fry survival, Lake trout, *Salvelinus namaycush*	6	Burdick, et al. 1972
Reduced survival, Coho salmon (fingerling), *Oncorhynchus kisutch*	6.25	Buhler, et al. 1969
Reduced survival, Chinook salmon (fingerling), *Oncorhynchus tshawytscha*	6.25	Buhler, et al. 1969
Reduced light intensity discrimination, Rainbow trout, *Salmo gairdneri*	9	McNicholl & Mackay, 1975
Reduced phenoxyethanol anesthetic induction and recovery times, Rainbow trout, *Salmo gairdneri*	11.36	Klaverkamp, et al. 1976

* Value converted from dry weight to wet weight basis

Geometric mean of normalized BCF values (see text) = 17,870

Marketability for human consumption: FDA action level for fish = 5.0 mg/kg

Percent lipid value for freshwater species (see Guidelines) = 15

Percent lipid value for saltwater species (see Guidelines) = 16

Freshwater: $\frac{5.0}{17{,}870 \times 15}$ = 0.000019 mg/kg = 0.019 µg/l

Saltwater: $\frac{5.0}{17{,}870 \times 16}$ = 0.000017 mg/kg = 0.017 µg/l

Table 5. (Continued)

Using highest BCF for edible portion of a consumed species

Freshwater: Lake trout = 458,259 (Miles and Harris, 1973)

$$\frac{5.0}{458,259} = 0.000011 \text{ mg/kg} = 0.011 \ \mu g/l$$

Wildlife Protection: Lowest maximum permissible tissue concentration = 0.15 mg/kg (Anderson, et al. 1975)

Percent lipid value for northern anchovy = 8 (Reintjes, 1980)

Freshwater and Saltwater: $$\frac{0.15}{17,870 \times 8} = 0.0000010 \text{ mg/kg} = 0.0010 \ \mu g/l$$

Freshwater Final Residue Value = 0.0010 µg/l

Saltwater Final Residue Value = 0.0010 µg/l

Table 6. Other data for DDT and metabolites

Species	Duration	Effect	Result (µg/l)	Reference
		FRESHWATER SPECIES		
		DDT		
Alga, *Chlorella pyrenoidosa*	7 days	No growth effect	100,000	Christie, 1969
Cladoceran, *Daphnia magna*	26 hrs	LC50	5.5	Crosby, et al. 1966
Cladoceran, *Daphnia magna*	14 days	LC50	0.67	Maki & Johnson, 1975
Cladoceran, *Daphnia magna*	14 days	50% inhibition of total young produced	0.50	Maki & Johnson, 1975
Sowbug, *Asellus brevicaudus*	48 hrs	LC50	4.7	Macek & Sanders, 1970
Scud, *Gammarus fasciatus*	48 hrs	LC50	3.6	Macek & Sanders, 1970
Scud, *Gammarus fasciatus*	120 hrs	LC50	0.6	Sanders, 1972
Glass shrimp, *Palaemonetes kadiakensis*	36 hrs	LC50	4.5	Ferguson, et al. 1965b
Glass shrimp, *Palaemonetes kadiakensis*	120 hrs	LC50	1.3	Sanders, 1972
Stonefly (naiad), *Acroneuria pacifica*	30 days	LC50	72	Jensen & Gaufin, 1964
Stonefly (naiad), *Pteronarcys californica*	30 days	LC50	265	Jensen & Gaufin, 1964
Damselfly, *Ischnura verticalis*	48 hrs	LC50	22.5	Macek & Sanders, 1970
Planarian, *Polycelis felina*	24 hrs	Asexual fission inhibition	250	Kouyoumjian & Uglow, 1974

Table 6. (Continued)

Species	Duration	Effect	Result (µg/l)	Reference
Micrometazoan, *Lepidodermella squammata*	96 hrs	Reproductive lethality (25% DDT)	3,000	Hummon, 1974
Coho salmon, *Oncorhynchus kisutch*	-	Reduced fry survival	1.09 mg/kg in eggs	Johnson & Pecor, 1969
Coho salmon (juvenile), *Oncorhynchus kisutch*	7 days	Increased cough frequency	5	Schaumburg, 1967
Coho salmon, *Oncorhynchus kisutch*	125 days	Estimated median survival time - 106 days	1.27 mg/kg in food	Buhler & Shanks, 1972
Cutthroat trout, *Salmo clarki*	-	Reduced sac fry survival	>0.4 mg/kg in eggs	Cuerrier, et al. 1967
Rainbow trout, *Salmo gairdneri*	24 hrs	Uncontrolled reflex reaction	100	Peters & Weber, 1977
Rainbow trout, *Salmo gairdneri*	5 hrs	Cough response threshold	52-140	Lunn, et al. 1976
Rainbow trout, *Salmo gairdneri*	-	Reduced sac fry survival	>0.4 mg/kg in eggs	Cuerrier, et al. 1967
Atlantic salmon (gastrulae), *Salmo salar*	30 days	Retarded behavioral development and impaired balance of alevins	50	Dill & Saunders, 1974
Atlantic salmon, *Salmo salar*	24 hrs	Altered temperature selection	5	Ogilvie & Anderson, 1965
Atlantic salmon, *Salmo salar*	24 hrs	Altered temperature selection for 1 mo	50	Ogilvie & Miller, 1976
Atlantic salmon, *Salmo salar*	24 hrs	Altered temperature selection	10	Peterson, 1973
Brown trout (alevin), *Salmo trutta*	48 hrs	LC50	2.5	Alabaster, 1969

Table 6. (Continued)

Species	Duration	Effect	Result (µg/l)	Reference
Brook trout, *Salvelinus fontinalis*	24 hrs	LC50	54	Miller & Ogilvie, 1975
Brook trout, *Salvelinus fontinalis*	24 hrs	Lateral line nerve hypersensitivity	100	Anderson, 1968
Brook trout, *Salvelinus fontinalis*	24 hrs	Visual conditioned avoidance inhibition	20	Anderson & Peterson, 1969
Brook trout, *Salvelinus fontinalis*	-	Reduced sac fry survival	>0.4 mg/kg in eggs	Cuerrier, et al. 1967
Brook trout, *Salvelinus fontinalis*	24 hrs	Altered temperature selection	20	Gardner, 1973
Brook trout, *Salvelinus fontinalis*	156 days	Slight reduction in sac fry survival	2 mg/kg in food	Macek, 1968
Brook trout, *Salvelinus fontinalis*	24 hrs	Altered temperature selection	10	Miller & Ogilvie, 1975
Brook trout, *Salvelinus fontinalis*	24 hrs	Altered temperature selection	100	Peterson, 1973
Lake trout (fry), *Salvelinus namaycush*	-	Reduced survival	2.9 mg/kg in fry	Burdick, et al. 1964
Goldfish, *Carassius auratus*	2.5 hrs	Loss of balance and decreased spontaneous electrical activity of the cerebellum	1,000	Aubin & Johansen, 1969
Goldfish, *Carassius auratus*	4 days	Exploratory behavior inhibition	10	Davy & Kleerekoper, 1973
Goldfish, *Carassius auratus*	7 days	Schooling inhibition	1	Weis & Weis, 1974
Golden shiner, *Notemigonus crysoleucas*	24 hrs	Schooling inhibition	15	Bailey, 1973

Table 6. (Continued)

Species	Duration	Effect	Result (µg/l)	Reference
Golden shiner, *Notemigonus crysoleucas*	36 hrs	LC50	29.9	Ferguson, et al. 1964
Fathead minnow, *Pimephales promelas*	48 hrs	LC50 (static)	7.4	Lincer, et al. 1970
Fathead minnow, *Pimephales promelas*	48 hrs	LC50 (flow-through)	>40	Lincer, et al. 1970
Fathead minnow, *Pimephales promelas*	266 days	Mg^{2+} ATPase inhibition	0.5	Desaiah, et al. 1975
Channel catfish (fingerling), *Ictalurus punctatus*	96 hrs	LC50 (50% DDT dust)	>2,000	Clemens & Snead, 1959
Black bullhead, *Ictalurus melas*	36 hrs	LC50	16.4	Ferguson, et al. 1965a
Mosquitofish, *Gambusia affinis*	48 hrs	LC50	43	Dziuk & Plapp, 1973
Mosquitofish, *Gambusia affinis*	36 hrs	LC50	21.3	Ferguson, et al. 1965a
Mosquitofish, *Gambusia affinis*	40 min	Succinic dehydrogenase activity inhibition	9×10^{-9} molar	Moffett & Yarbrough, 1972
Green sunfish, *Lepomis cyanellus*	36 hrs	LC50	23.5	Ferguson, et al. 1964
Bluegill, *Lepomis macrochirus*	36 hrs	LC50	28.7	Ferguson, et al. 1964
Bluegill, *Lepomis macrochirus*	16 days	Hyperactive locomotor response	0.008	Ellgaard, et al. 1977
Toad, *Bufo woodhousei fowleri*	36 hrs	LC50	560,000	Ferguson & Gilbert, 1967

Table 6. (Continued)

Species	Duration	Effect	Result (µg/l)	Reference
Toad (tadpole, 4-5-wk-old), *Bufo woodhousei fowleri*	96 hrs	LC50	1,000	Sanders, 1970
Toad (tadpole, 6-wk-old), *Bufo woodhousei fowleri*	96 hrs	LC50	100	Sanders, 1970
Toad (tadpole, 7-wk-old), *Bufo woodhousei fowleri*	96 hrs	LC50	30	Sanders, 1970
Frog, *Acris crepitans*	36 hrs	LC50	620,000	Ferguson & Gilbert, 1967
Frog (tadpole), *Pseudacris triseriata*	96 hrs	LC50	800	Sanders, 1970
Frog (tadpole), *Rana clamitans*	6 days	Increased pitultary melanocyte-stimulating hormone levels	100	Peaslee, 1970
Frog, *Rana temporaria*	20 days	LC50	7.6 mg/kg in food	Harri, et al. 1979
Turtle, *Chrysemys picta*	30 min	ATPase inhibition	0.53 µM	Phillips & Wells, 1974
		TDE		
Channel catfish (fingerling), *Ictalurus punctatus*	96 hrs	LC50 (50% TDE)	<2,600	Clemens & Sneed, 1959
Toad (tadpole, 4-5-wk-old), *Bufo woodhousei fowleri*	96 hrs	LC50	140	Sanders, 1970
Frog (tadpole), *Pseudacris triseriata*	96 hrs	LC50	400	Sanders, 1970

Table 6. (Continued)

Species	Duration	Effect	Result (µg/l)	Reference
		SALTWATER SPECIES		
		DDT		
Eastern oyster, *Crassostrea virginica*				
males	12 days	Bioconcentration factor = 20,000#	-	Butler, 1966
females	12 days	Bioconcentration factor = 14,000#	-	Butler, 1966
male and female	12 days	Bioconcentration factor = 10,000#	-	Butler, 1966
Gametes				
eggs	12 days	Bioconcentration factor = 25,000#	-	Butler, 1966
sperm	12 days	Bioconcentration factor = 9,000#	-	Butler, 1966
Eastern oyster, *Crassostrea virginica*	7 days	Affected shell deposition	10.0	Butler, 1966
Eastern oyster, *Crassostrea virginica*	392 days	Bioconcentration factor = 37,000##	-	Parrish, 1974
Pink shrimp, *Penaeus duorarum*	30 days	Affected cation concentrations in hepatopancreas tissue	-	Nimmo & Blackman, 1972
Pink shrimp, *Penaeus duorarum*	28 days	LC100	0.12	Nimmo, et al. 1970
Pink shrimp, *Penaeus duorarum*	2 days	EC50	0.6	Lowe, undated
Pink shrimp, *Penaeus duorarum*	13 days	Bioconcentration factor = 1,500#	-	Nimmo, et al. 1970
White shrimp, *Penaeus setiferus*	1 day	EC50	0.7	Lowe, undated

Table 6. (Continued)

Species	Duration	Effect	Result (µg/l)	Reference
Brown shrimp, *Penaeus aztecus*	2 days	EC50	1.0	Lowe, undated
Grass shrimp, *Palaemonetes pugio*	2 days	EC50	0.8	Lowe, undated
Blue crab, *Callinectes sapidus*	2 days	EC50	10	Lowe, undated
Blue crab, *Callinectes sapidus*	36 wks	Mortality	0.5	Lowe, 1965
Sheepshead minnow, *Cyprinodon variegatus*	2 days	LC50	3.2	Lowe, undated
Sheepshead minnow, *Cyprinodon variegatus*	2 days	LC50	2.0	Lowe, undated
Mummichog, *Fundulus heteroclitus*	10 days	LC50	2.7	Eisler, 1970a
Longnose killifish, *Fundulus similis*	2 days	LC50	5.5	Lowe, undated
Mosquitofish, *Gambusia affinis*	1 day	Affected salinity preference	5.0-20	Hansen, 1972
Pinfish, *Lagodon rhomboides*	2 days	LC50	0.32	Lowe, undated
Pinfish, *Lagodon rhomboides*	14 days	Bioconcentration factor = 40,000*	-	Hansen & Wilson, 1970
Pinfish, *Lagodon rhomboides*	14 days	Bioconcentration factor = 11,000*	-	Hansen & Wilson, 1970
Spot, *Leiostomus xanthurus*	2 days	LC50	1.8	Lowe, undated
Striped mullet, *Mugil cephalus*	2 days	LC50	0.4	Lowe, undated

Table 6. (Continued)

Species	Duration	Effect	Result (µg/l)	Reference
Striped mullet, *Mugil cephalus*	2 days	LC50	0.55	Lowe, undated
Striped mullet, *Mugil cephalus*	2 days	LC50	0.4	Lowe, undated
		TDE		
Pink shrimp, *Penaeus duorarum*	2 days	EC50	2.4	Lowe, undated
Longnose killifish, *Fundulus similis*	2 days	LC50	42	Lowe, undated
		DDE		
Brown shrimp, *Penaeus aztecus*	2 days	EC50	28	Lowe, undated
Spot, *Leiostomus xanthurus*	2 days	LC50	20	Lowe, undated

* DDT and metabolites

**Results based on unmeasured water concentrations.

REFERENCES

Alabaster, J.S. 1969. Survival of fish in 164 herbicides, insecticides, fungicides, wetting agents and miscellaneous substances. Int. Pest. Control. 2: 29.

Albaugh, D.W. 1972. Insecticide tolerances of two crayfish populations (Procambarus acutus) in south-central Texas. Bull. Environ. Contam. Toxicol. 8: 334.

Allison, D., et al. 1963. Insecticides: Effects on cutthroat trout of repeated exposure to DDT. Science. 142: 958.

Anderson, D.W., et al. 1975. Brown pelicans: Improved reproduction off the southern California coast. Science. 190: 806.

Anderson, J.M. 1968. Effect of sublethal DDT on the lateral line of brook trout, Salvelinus fontinalis. Jour. Fish. Res. Board Can. 25: 2677.

Anderson, J.M. and M.R. Peterson. 1969. DDT: Sublethal effects on brook trout nervous system. Science. 164: 440.

Aubin, A.E. and P.H. Johansen. 1969. The effects of an acute DDT exposure on the spontaneous electrical activity of goldfish cerebellum. Can. Jour. Zool. 47: 163.

Bailey, R.L. 1973. The effects of sublethal concentrations of DDT on schooling behavior. Ph.D. Thesis. Univ. Georgia, Athens, Georgia.

Batterton, J.C., et al. 1972. DDT: Inhibition of sodium choride tolerance by the blue-green algae Anacystis nidulans. Science. 176: 1141.

Bedford, J.W. and M.J. Zabik. 1973. Bioactive compounds in the aquatic environment: Uptake and loss of DDT and dieldrin by freshwater mussels. Arch. Environ. Contam. Toxicol. 1: 97.

Blus, L.J., et al. 1972. Logarithmic relationship of DDE residues to eggshell thinning. Nature. 235: 376.

Blus, L.J., et al. 1974. Organochlorine residues in brown pelican eggs: Relation to reproductive success. Environ. Pollut. 7: 81.

Buhler, D.R. and W.E. Shanks. 1972. Influence of body weight on chronic oral DDT toxicity in coho salmon. Jour. Fish. Res. Board Can. 27: 347.

Buhler, D.R., et al. 1969. Chronic oral DDT toxicity in juvenile coho and chinook salmon. Toxicol. Appl. Pharmacol. 14: 535.

Burdick, G.E., et al. 1964. The accumulation of DDT in lake trout and the effect on reproduction. Trans. Am. Fish. Soc. 93: 127.

Burdick, G.E., et al. 1972. Effect of rate and duration of feeding DDT on the reproduction of salmonid fishes reared and held under controlled conditions. N.Y. Fish Game Jour. 19: 97.

Butler, P.A. 1966. The problem of pesticides in estuaries. Trans. Am. Fish. Soc. Spec. Publ. 3: 110.

Campbell, R.D., et al. 1974. The in vivo effect of p,p'-DDT on Na^+-K^+-activated ATPase activity in rainbow trout (Salmo gairdneri). Bull. Environ. Contam. Toxicol. 11: 425.

Christie, A.E. 1969. Effects of insecticides on algae. Water Sew. Works. 116: 172.

Clemens, H.P. and K.E. Sneed. 1959. Lethal doses of several commercial chemicals for fingerling channel catfish. U.S. Fish. Wildl. Serv. Spec. Sci. Rep. Fish. U.S. Dept. Inter. 316: 10.

Crosby, D.G., et al. 1966. The detection of acute toxicity with Daphnia magna. Food Cosmet. Toxicol. 4: 503.

Cuerrier, J.P., et al. 1967. Problems with DDT in fish culture operations. Natur. Can. 94: 315.

Davy, F.B. and H. Kleerekoper. 1973. Effects of exposure to sublethal DDT on the exploratory behavior of goldfish (Carassius auratus). Water Resour. Res. 9: 900.

Desaiah, D., et al. 1975. DDT: Effect of continuous exposure on ATPase activity in fish, Pimephales promelas. Arch. Environ. Contam. Toxicol. 3: 132.

Dill, P.A. and R.C. Saunders. 1974. Retarded behavioral development and impaired balance in Atlantic salmon (Salmo salar) alevins hatched from gastrulae exposed to DDT. Jour. Fish. Res. Board Can. 31: 1936.

Dziuk, L.J. and F.W. Plapp. 1973. Insecticide resistance in mosquitofish from Texas. Bull. Environ. Contam. Toxicol. 9: 15.

Earnest, R.D. and P.E. Benville, Jr. 1971. Correlation of DDT and lipid levels for certain San Francisco Bay fish. Pestic. Monitor. Jour. 5: 235.

Eberhardt, L.L., et al. 1971. Food chain model for DDT kinetics in a freshwater marsh. Nature. 230: 60.

Eisler, R. 1969. Acute toxicities of insecticides to marine decapod crustaceans. Crustaceana. 16: 320.

Eisler, R. 1970a. Factors affecting pesticide-induced toxicity in an estuarine fish. Tech. Pap. Bur. Sport Fish. Wildl. U.S. Dept. Inter. No. 45.

Eisler, R. 1970b. Acute toxicities of organochlorine and organophosphorus insecticides to estuarine fishes. Tech. Paper. Bur. Sport Fish. Wildl. U.S. Dept. Inter. No. 46.

Ellgaard, E.G., et al. 1977. Locomotor hyperactivity induced in the bluegill sunfish, Lepomis macrochirus, by sublethal concentrations of DDT. Can. Jour. Zool. 55: 1077.

Ferguson, D.E. and C.C. Gilbert. 1967. Tolerances of three species of anuran amphibians to five chlorinated hydrocarbon insecticides. Jour. Miss. Acad. Sci. 13: 135.

Ferguson, D.E., et al. 1964. Resistance to chlorinated hydrocarbon insecticides in three species of freshwater fish. Bioscience. 14: 43.

Ferguson, D.E., et al. 1965a. Tolerances to five chlorinated hydrocarbon insecticides in two species of fish from a transect of the lower Mississippi River. Jour. Miss. Acad. Sci. 11: 239.

Ferguson, D.E., et al. 1965b. Tolerances of two populations of freshwater shrimp to five chlorinated hydrocarbon insecticides. Jour. Miss. Acad. Sci. 11: 235.

Gardner, D.R. 1973. The effect of some DDT and methoxychlor analogs on temperature selection and lethality in brook trout fingerlings. Pestic. Biochem. Physiol. 2: 437.

Gaufin, A.R., et al. 1961. Bioassays determine pesticide toxicity to aquatic invertebrates. Water Sew. Works. 108: 355.

Gaufin, A.R., et al. 1965. The toxicity of ten organic insecticides to various aquatic invertebrates. Water Sew. Works. 12: 276.

Hamelink, J.L. and R.C. Waybrant. 1976. DDE and lindane in a large-scale model lentic ecosystem. Trans. Am. Fish. Soc. 105: 124.

Hamelink, J.L., et al. 1971. A proposal: Exchange equlibria control the degree chlorinated hydrocarbons are biologically magnified in the lentic environments. Trans. Am. Fish. Soc. 100: 207.

Hansen, D.J. 1972. DDT and malathion: Effect on salinity selection by mosquito fish. Trans. Am. Fish. Soc. 101: 346.

Hansen, D.J. and A.J. Wilson, Jr. 1970. Significance of DDT residues from the estuary near Pensacola, Fla. Pestic. Monitor. Jour. 4: 51.

Harri, M.N.E., et al. 1979. Toxicity and retention of DDT in adult frogs, Rana temporaria L. Environ. Pollut. 20: 45.

Haseltine, S., et al. 1974. DDE, PTH and eggshell thinning in mallard, pheasant, and ring dove. Bull. Environ. Contam. Toxicol. 11: 139.

Heath, R.G., et al. 1969. Marked DDE impairment of mallard reproduction in controlled studies. Nature. 224: 47.

Henderson, C., et al. 1959. Relative toxicity of ten chlorinated hydrocarbon insecticides to four species of fish. Trans. Am. Fish. Soc. 88: 23.

Hummon, W.D. 1974. Effects of DDT on longevity and reproductive rate in Lepidodermella squammata (Gastroticha, Chaetonotida). Am. Midland Nat. 92: 327.

Jarvinen, A.W., et al. 1977. Long-term toxic effects of DDT food and water exposure on fathead minnows (Pimephales promelas). Jour. Fish. Res. Board Can. 34: 2089.

Jensen, L.D. and A.R. Gaufin. 1964. Long-term effects of organic insecticides on two species of stonefly naiads. Trans. Am. Fish. Soc. 93: 357.

Johnson, H.E. and C. Pecor. 1969. Coho salmon mortality and DDT in Lake Michigan. Trans. N. Am. Wildl. Nat. Resour. Conf. 34: 159.

Katz, M. 1961. Acute toxicity of some organic insecticides to three species of salmonids and to the threespine stickleback. Trans. Am. Fish. Soc. 90: 264.

King, S.F. 1962. Some effects of DDT on the guppy and the brown trout. Spec. Sci. Rep. Fish. U.S. Dept. Inter. 399: 22.

Klaverkamp, J.F., et al. 1976. Effects of chronic DDT/DDE exposure on anesthetic induction and recovery times in rainbow trout (Salmo gairdneri). Jour. Fish. Res. Board Can. 33: 1331.

Kolipinski, M.C., et al. 1971. Organochlorine insecticide residues in Everglades National Park and Loxahatchee National Wildlife Refuge, Florida. Pestic. Monitor. Jour. 5: 281.

Korn, S. and R. Earnest. 1974. Acute toxicity of twenty insecticides to striped bass, Morone saxatilis. Calif. Fish Game. 60: 128.

Kouyoumjian, H.H. and R.F. Uglow. 1974. Some aspects of the toxicity of p,p'-DDT, p,p'-DDE, and p,p'-DDD to the freshwater planarian Polycelis felina (Tricladida). Environ. Pollut. 7: 103.

Lake Michigan Interstate Pesticide Committee. 1972. An evaluation of DDT and dieldrin in Lake Michigan. EPA-R3-72-003. U.S. Environ. Prot. Agency, Cincinnati, Ohio.

Lee, S.S., et al. 1976. Effect of DDT on photosynthesis of Selanastrum capricornutum. Pestic. Biochem. Physiol. 6: 46.

Lincer, J.L. 1975. DDE-induced eggshell-thinning in the American kestrel: A comparison of the field situation and laboratory results. Jour. Appl. Ecol. 12: 781.

Lincer, J.L., et al. 1970. DDT and endrin fish toxicity under static versus dynamic bioassay conditions. Trans. Am. Fish. Soc. 99: 13.

Longcore, J.R. and R.C. Stendell. 1977. Shell thinning and reproductive impairment in black ducks after cessation of DDE dosage. Arch. Environ. Contam. Toxicol. 6: 293.

Longcore, J.R., et al. 1971. DDE thins eggshells and lowers reproductive success of captive black ducks. Bull. Environ. Contam. Toxicol. 6: 485.

Lowe, J.I. Results of toxicity tests with fishes and macroinvertebrates. Data sheets available from U.S. Environ. Prot. Agency, Environ. Res. Lab., Gulf Breeze, Florida. 32561.

Lowe, J.I. 1965. Chronic exposure of blue crabs, Callinectes sapidus to sublethal concentrations of DDT. Ecology. 46: 899.

Lowe, J.I., et al. 1970. Chronic exposure of oysters to DDT, toxaphene and parathion. Natl. Shellfish. Assoc. 61: 71.

Lowe, J.I. Results of toxicity tests with fishes and macroinvertebrates. Data sheets available from U.S. Environ. Prot. Agency, Environ. Res. Lab., Gulf Breeze, Florida.

Lunn, C.R., et al. 1976. Effects of three pesticides on respiration, coughing, and heart rates of rainbow trout (Salmo gairdneri Richardson). Can. Jour. Zool. 54: 214.

Macek, K.J. 1968. Reproduction in brook trout (Salvelinus fontinalis) fed sublethal concentrations of DDT. Jour. Fish. Res. Board Can. 25: 1787.

Macek, K.J. and W.A. McAllister. 1970. Insecticide susceptibility of some common fish family representatives. Trans. Am. Fish. Soc. 99: 89.

Macek, K.J. and H.O. Sanders. 1970. Biological variation in the susceptibility of fish and aquatic invertebrates to DDT. Trans. Am. Fish. Soc. 99: 89.

Maki, A.W. and H.E. Johnson. 1975. Effect of PCB (Aroclor® 1254) and p,p'-DDT on production and survival of Daphnia magna Strauss. Bull. Environ. Contam. Toxicol. 13: 412.

Marking, L.L. 1966. Evaluation of p,p'-DDT as a Reference Toxicant in Bioassays. In: Investigations in Fish Control. U.S. Fish Wildl. Serv. Resour. Publ. U.S. Dept. Inter. 14: 10.

McLane, M.A.R. and L.C. Hall. 1972. DDE thins screech owl eggshells. Bull. Environ. Contam. Toxicol. 8: 65.

McNicholl, P.G. and W.C. Mackay. 1975. Effect of DDT on discriminating ability of rainbow trout (Salmo gairdneri). Jour Fish. Res. Board Can. 32: 785.

Miles, J.R.W. and C.R. Harris. 1973. Organochlorine insecticide residues in streams draining agricultural, urban-agricultural, and resort areas of Ontario, Canada - 1971. Pestic. Monitor. Jour. 6: 363.

Miller, D.L. and D.M. Ogilvie. 1975. Temperature selection in brook trout (Salvelinus fontinalis) following exposure to DDT, PCB, or phenol. Bull. Environ. Contam. Toxicol. 14: 545.

Moffett, G.B. and J.D. Yarbrough. 1972. The effects of DDT, toxaphene, and dieldrin on succinic dehydrogenase activity in insecticide-resistant and susceptible Gambusia affinis. Jour. Agric. Food Chem. 20: 558.

Nimmo, D.R. and R.R. Blackman. 1972. Effects of DDT on cations in the hepatopancreas of penaeid shrimp. Trans. Am. Fish. Soc. 101: 547.

Nimmo, D.R., et al. 1970. Localization of DDT in the body organs of pink and white shrimp. Bull. Environ. Contam. Toxicol. 5: 333.

Odum, W.E., et al. 1969. DDT residues absorbed from organic detritus by fiddler crabs. Science. 164: 576.

Ogilvie, D.M. and J.M. Anderson. 1965. Effect of DDT on temperature selection by young Atlantic salmon, Salmo salar. Jour. Fish. Res. Board Can. 22: 503.

Ogilvie, D.M. and D.L. Miller. 1976. Duration of a DDT-induced shift in the selected temperature of Atlantic salmon (Salmo salar). Bull. Environ. Contam. Toxicol. 16: 86.

Parrish, P.R. 1974. Aroclor® 1254, DDT and DDD, and dieldrin: Accumulation and loss by American oysters (Crassostrea virginica). Proc. Natl. Shellfish Assoc. 64: 7.

Peaslee, M.H. 1970. Influence of DDT upon pituitary melanocyte-stimulating hormone (MSH) activity in the anuran tadpole. Gen. Comp. Endocrinol. 14: 594.

Peters, C.F. and D.D. Weber. 1977. DDT: Effect on the Lateral Line Nerve of Steelhead Trout. In: Physiological Responses of Marine Biota to Pollutants. Academic Press, New York. p. 75.

Peterson, R.H. 1973. Temperature selection of Atlantic salmon (Salmo salar) and brook trout (Salvelinus fontinalis) as influenced by various chlorinated hydrocarbons. Jour. Fish. Res. Board. Can. 30: 1091.

Phillips, J.B. and M.R. Wells. 1974. Adenosine triphophatase activity in liver, intestinal mucosa, cloacal bladder, and kidney tissue of five turtle species following in vitro treatment with 1,1,1-trichloro-2,2-bis (p-chlorophenyl) ethane (DDT). Jour. Agric. Food Chem. 22: 404.

Porter, R.D. and S.N. Wiemeyer. 1972. DDE at low dietary levels kills captive American kestrels. Bull. Environ. Contam. Toxicol. 8: 193.

Post, G. and T.R. Schroeder. 1971. The toxicity of four insecticides to four salmonid species. Bull. Environ. Contam. Toxicol. 6: 144.

Priester, E.L., Jr. 1965. The accumulation and metabolism of DDT, parathion, and endrin by aquatic food-chain organisms. Ph.D. Thesis. Clemson Univ., Clemson, South Carolina

Reinert, R.E. 1970. Pesticide concentrations in Great Lakes fish. Pestic. Monitor. Jour. 3: 233.

Reinert, R.E and L.J. Stone. 1974. Dieldrin and DDT: Accumulation from water and food by lake trout (Salvelinus namaycush) in the laboratory. Proc. 17th Conf. Great Lakes Res. p. 52.

Reinert, R.E., et al. 1974. Effect of temperature on accumulation of methylmercuric chloride and p,p'-DDT by rainbow trout (Salmo gairdneri). Jour. Fish. Res. Board Can. 31: 1649.

Reintjes, J.W. 1980. Memorandum to A.W. Jarvinen. U.S. EPA. April 28.

Sanborn, J.R., et al. 1975. Uptake of three polychlorinated biphenyls, DDT, and DDE by the green sunfish, Lepomis cyanellus Raf. Bull. Environ. Contam. Toxicol. 13: 209.

Sanders, H.O. 1969. Toxicity of pesticides to the crustacean Gammarus lacustris. Bur. Sport Fish. Wildl. Tech. Pap. 25: 18.

Sanders, H.O. 1970. Pesticide toxicities to tadpoles of the western chorus frog Pseudacris triseriata and fowler's toad Bufo woodhousii fowleri. Copeia. 2: 246.

Sanders, H.O. 1972. Toxicity of some insecticides to four species of malacostracan crustaceans. Bur. Sport Fish. Wildl. Tech. Pap. 66: 19.

Sanders, H.O. and O.B. Cope. 1966. Toxicities of several pesticides to two species of cladocerans. Trans. Am. Fish. Soc. 95: 165.

Sanders, H.O. and O.B. Cope. 1968. The relative toxicities of several pesticides to naiads of three species of stoneflies. Limnol. Oceanogr. 13: 112.

Schaumburg, F.D., et al. 1967. A method to evaluate the effects of water pollutants on fish respiration. Water Res. 1: 731.

Schimmel, S.C. and J.M. Patrick. 1975. Acute Bioassays. Semi-annual rep., U.S. Environ. Prot. Agency, Environ. Res. Lab., Gulf Breeze, Florida.

Schoettger, R.A. 1970. Progress in sport fishery research 1970. Res. Publ. U.S. Dept. Inter. 106: 10.

Sodergren, A. 1968. Uptake and accumulation of C^{14}-DDT by Chlorella sp. (Chlorophyceae). Oikos. 19: 126.

Sodergren, A. and B.J. Swenson. 1973. Uptake and accumulation of DDT and PCB by Ephemera danica (Ephemeroptera) in continuous-flow systems. Bull. Environ. Contam. Toxicol. 9: 345.

Stadnyk, L., et al. 1971. Pesticide effect on growth and ^{14}C assimiliation in a freshwater alga. Bull. Environ. Contam. Toxicol. 6: 1.

Tooby, T.E., et al. 1975. The acute toxicity of 102 pesticides and miscellaneous substances to fish. Chem. Ind. 12: 523.

U.S. Food and Drug Administration. 1978. Administrative Guideline 7420.08, Attachment C, October 5.

Weis, P. and J.S. Weis. 1974. DDT causes changes in activity and schooling behavior in goldfish. Environ. Res. 7: 68.

Wilkes, F.G. and C.M. Weiss. 1971. The accumulation of DDT by the dragonfly nymph, Tetragoneuria. Trans. Am. Fish. Soc. 100: 222.

Wurster, C.F., Jr. 1968. DDT reduces photosynthesis by marine phytoplankton. Science. 159: 1474.

Mammalian Toxicology and Human Health Effects

EXPOSURE

Ingestion from Water

The solubility of DDT in water is approximately 1.2 ppb, although the presence of salts, colloid and particulate material may increase this solubility. An examination of Table 1 shows no instance of natural water approaching the solubility limit (Bevenue, 1976). Lichtenberg, et al. (1970) noted that residues in surface water peaked in 1966 and decreased in 1967 and 1968, and this trend should be continuing. Since the primary source of DDT residues in surface waters is runoff from drainage areas, the variations seen in samplings range from nondetectable to 1 ppb. Variations result in variable seasonal runoff patterns, sedimentation rates, amount of pesticides on land areas, and distance from points of application.

By utilizing the guidelines for deriving water quality criteria for the protection of aquatic life (43 FR 29028), maximum concentrations of DDT in fresh water were calculated. To protect freshwater aquatic organisms and consumers of these organisms, a 24-hour average concentration of DDT of 0.00023 µg/l and a maximum concentration of 0.41 µg/l were proposed as standards. The chronic levels proposed are near the limits of detection and subject to significant analytical error (Gunther, 1969). The low chronic level proposed may be a reflection of the large bioaccumulation factor used in this model.

TABLE 1

DDT and Metabolites in Waters of Different Areas*

Water Sources	Time Period	ppt Range
Galveston Bay (Gulf of Mexico)	1964	**N.D.-1,000
Selected Western Streams (USA)	1965-1966	N.D.-120
Selected Western Streams (USA)	1966-1968	N.D.-120
Surface Waters of United States	1967-1968	
Region:		
Northeast		N.D.-30
Middle Atlantic		N.D.-30
Southeast		N.D.-60
Ohio Basin		N.D.-5
Great Lakes		N.D.-270
Missouri Basin		N.D.-840
South Central		N.D.-110
Southwest		N.D.-30
Northwest		N.D.-20
Iowa Rivers (USA)	1968-1970	N.D.-23
Arkansas Bay, Texas (USA)	1969	N.D.-100
Big Creek, Ontario, Canada	1970	3-67
Seawater, California Current System	1970	2-6
Hawaii:		
potable waters	1971	ca 1
marine waters	1970-1971	1-82
Rivers, Southern California Bight area	1971-1972	120-880

*Source: Bevenue, 1976

**N.D. = Non detectable

The National Academy of Sciences Safe Drinking Water Committee estimates the carcinogenic risk to man to be an excess death rate of 63 persons per year at a 10 μg/l exposure. These calculations were for direct exposure from water intake and do not account for bioconcentration effects. In 1976, the U.S. EPA recommended that water levels not exceed 0.001 μg/l on the basis of bioaccumulation in food and adverse effects in birds.

According to Lichtenberg, et al. (1970), fresh water entering treatment plants contained DDT residues in amounts of 0.01 to 0.002 of the permissible levels for public water supplies as described in the Water Quality Criteria (Fed. Water Pollut. Control Adm., 1968) of 50 ng/l.

Assuming an average daily intake of 2 liters of water per individual, Huang (1972) concluded that the maximum daily ingestion would be 0.002 mg DDT, which is based on the highest recorded levels in water. This would amount to approximately 5 percent of the total daily dietary intake. Most of the evidence indicates that DDT residues in drinking water are 1 to 3 orders of magnitude less; therefore, it has been concluded that recorded DDT residues in water probably make only a minor contribution to DDT ingestion by human populations but may contribute to bioconcentration in aquatic species and higher organisms in the food chain (Woodwell, et al. 1967). Recent monitoring studies of DDT in water are summarized in Table 2.

Ingestion from Food

The accumulation of DDT in different species of widely different phyla has made it the classical compound for study of biological

TABLE 2

DDT Residues in Ocean Water

Location and Date	DDT, 10^{-9} g/liter	Reference
Southern Calif., 1974	0.30 - 1.80	Scura and McClure (1975)
Irish Sea, 1974	<0.01 - 0.24	Dawson and Riley (1977)
Firth of Clyde, 1974	0.02 - 0.05	Dawson and Riley (1977)
North Sea, 1974	<0.01 - 0.04	Dawson and Riley (1977)
English Channel, 1974	<0.01 - 0.03	Dawson and Riley (1977)
Mississippi Delta	1.70 (mean)	Giam, et al. (1978)
Gulf Coast	0.35 (mean)	Giam, et al. (1978)
Open Gulf of Mexico	0.25 (mean)	Giam, et al. (1978)
Southern Calif. Bight near Los Angeles, 1973	40 - 60	Risebrough, et al. (1976)
Bight western boundary, 1973	0.44 - 1.40	Risebrough, et al. (1976)
Bight western boundary, 1975	<0.10 - 0.50	Risebrough, et al. (1976)
Near Los Angeles, 1975	<0.30 - 8.00	Risebrough, et al. (1976)
San Francisco Bay, 1975	0.11 (mean of 26)	Risebrough, et al. (1976)
Mediterranean, 1974	0.25 - 1.3	Risebrough, et al. (1976)
Pacific offshore waters of Mexico, 1975	0.003 - <0.1	Risebrough, et al. (1976)

magnification of pesticides. An abundance of literature attests to the widespread movement of persistent residues along food chains in natural environments coupled with the biological concentration of the residue at each trophic level. Magnification of DDT occurs by two routes: (1) direct absorption from contaminated water by aquatic organisms and (2) transfer of residues through sequential predator feeding.

Nontarget species, such as predatory birds, have been severely affected through reproductive loss due to eggshell thinning. Although in no way comprehensive, the following selected papers illustrate the relative magnitude of bioconcentration of DDT. Johnson, et al. (1971) introduced ^{14}C-labeled DDT into fresh water; within 3 days from initial exposure, the magnification factor in two groups of invertebrates (Cladocera and Diptera) ranged over 100,000 times; in two others (Amphipoda and Ephemeroptera), excesses of 20,000 occurred; and in Decapoda and Odonata, magnification was up to 3,000 times. Cope (1971) calculated the accumulation of DDT in comparison to water for several species as follows: 70,000 times for oysters, 1,000,000 times for coho salmon, and 1,200 to 317,000 times in other fish. As a final example of bioconcentration, Woodwell, et al. (1967) measured DDT residues in a Long Island marsh area and observed the following ppm on a whole body wet weight basis: for plankton, 0.04; water plants, 0.08; snail, 0.26; shrimp, 0.16; minnow, 0.94; bill fish, 2.07; heron, 3.5; cormorant, 26.4; gull, up to 75.5. However, the decline of DDT in the environment is reflected in the decrease in the residues of various avian species (Johnson, 1974; Klass and Belisle, 1977;

Anderson, et al. 1975; Spitzer, et al. 1978; Barber and Warlen, 1979).

The primary route of human exposure to DDT is from ingestion of small amounts in the diet. These residues are transferred from agricultural soils, of which 5 percent of the total area has been heavily treated and has an estimated average content of 2 ppm (Edwards, 1966). Since the half-life of DDT is approximately 3 to 10 years (Menzie, 1972) and sandy soils can retain 39 percent at 17 years (Nash and Woolson, 1967), the presence of DDT residues in foodstuffs derived from contaminated soils will continue for some time.

Monitoring programs by the Food and Drug Administration (FDA) have been conducted in 80 markets nationwide in the period from 1965 to 1970, and the results are shown in Table 3 (Bevenue, 1976). Meats, fish, poultry, and dairy products are the primary sources of DDT residues.

As seen from these data, there have been continual decreases in the overall levels of residues in all classes from 1965 to 1970. Between 1970 and 1973, a significant drop in residues of DDT and DDD occurred, constituting decreases of 86 and 89 percent, respectively. DDE decreased only 27 percent. These decreases are reflected in the changing amounts of estimated dietary intake: 1965 - 0.062 mg/man/day, 1970 - 0.024 mg/man/day, and 1973 - 0.008 mg/man/day (U.S. EPA, 1975). This trend continued through 1977 as reported by Johnson and Manske (1977). Compared to 49 percent of the samples presently containing organochlorine residues, 54 percent were observed in 1971. DDE in meat, fish and poultry has

TABLE 3

DDT and Metabolite Residues in Food and Feed*

Product and time period	Residue (ppm) DDT	DDD	DDE	Total
Dairy products (fat basis, 8-13% fat)				
1965-1966	0.040	0.015	0.075	0.130
1967-1968	0.030	0.019	0.063	0.112
1968-1969	0.023	0.012	0.048	0.083
1969-1970	0.017	0.005	0.043	0.065
Meat, fish, and poultry (fat basis, 17-23% fat)				
1965-1966	0.299	0.139	0.254	0.602
1967-1968	0.103	0.062	0.116	0.281
1968-1969	0.101	0.043	0.100	0.244
1969-1970	0.072	0.049	0.114	0.235
Grains				
1965-1966	0.008	0.002	0.001	0.011
1967-1968	0.004	0.001	0.002	0.007
1968-1969	0.005	0.001	0.001	0.007
1969-1970	0.004	0.001	0.001	0.006
Leafy vegetables				
1965-1966	0.012	0.016	0.005	0.033
1967-1968	0.015	0.007	0.004	0.026
1968-1969	0.010	0.001	0.007	0.018
1969-1970	0.007	0.001	0.002	0.010
Garden fruits (tomatoes, cucumbers, squash, etc.)				
1965-1966	0.027	0.017	0.005	0.049
1967-1968	0.029	0.015	0.002	0.046
1968-1969	0.028	0.012	0.002	0.042
1969-1970	0.019	0.016	0.002	0.037
Fruits				
1965-1966	0.009	0.003	0.002	0.014
1967-1968	0.009	0.001	0.002	0.012
1968-1969	0.009	0.004	0.001	0.014
1969-1970	0.021	0.001	0.001	0.023
Oils (salad oil, margarine, peanut butter, etc.)				
1965-1966	0.009	0.016	0.005	0.030
1967-1968	0.009	0.028	0.018	0.055
1968-1969	0.003	0.003	0.003	0.009
1969-1970	0.006	0.003	0.002	0.010

*Source: Bevenue, 1976

declined from 0.114 to 0.033 ppm, and in dairy products from 0.043 to 0.017 ppm, while DDT remained constant in meat residues at 0.017 ppm. The decreases in pesticide residues in various food classes indicate that the ban on DDT has indeed lowered the exposure of humans via the diet. This decrease is paralleled by a lowering of the total DDT equivalent in human tissues for the U.S. population average from approximately 8 ppm to 5 ppm residue in fat from 1971 through 1974.

The acceptable daily intake of DDT established by WHO/FAO is 0.005 mg/kg/day. Duggan and Corneliussen (1972) reported the six-year average from 1965 through 1970 in the U.S. diet of DDT and its metabolites to be almost 10-fold less at 0.0007 mg/kg/day.

A bioconcentration factor (BCF) relates the concentration of a chemical in aquatic animals to the concentration in the water in which they live. The steady-state BCFs for a lipid-soluble compound in the tissues of various aquatic animals seem to be proportional to the percent lipid in the tissue. Thus the per capita ingestion of a lipid-soluble chemical can be estimated from the per capita consumption of fish and shellfish, the weighted average percent lipids of consumed fish and shellfish, and a steady-state BCF for the chemical.

Data from a recent survey on fish and shellfish consumption in the United States were analyzed by SRI International (U.S. EPA, 1980). These data were used to estimate that the per capita consumption of freshwater and estuarine fish and shellfish in the United States is 6.5 g/day (Stephan, 1980). In addition, these data were used with data on the fat content of the edible portion of

the same species to estimate that the weighted average percent lipids for consumed freshwater and estuarine fish and shellfish is 3.0 percent.

Numerous laboratory and field studies, in which percent lipids and a steady-state BCF were measured, have been conducted on DDT. The mean of the BCF values, after normalization to one percent lipids, is 17,870 (see Table 5 in Aquatic Life Toxicology, Section B). An adjustment factor of 3 can be used to adjust the mean normalized BCF to the 3.0 percent lipids that is the weighted average for consumed fish and shellfish. Thus, the weighted average bioconcentration factor for DDT and the edible portion of all freshwater and estuarine aquatic organisms consumed by Americans is calculated to be 53,600.

Inhalation

Levels of DDT found in the air are far below levels that add significantly to total human intake. Stanley, et al. (1971) sampled air in nine localities in both urban and agricultural areas in the U.S. p,p'-DDT was found in all localities to range from 1 ng/m^3 of air to 2,520 ng/m^3. Generally, levels were highest in southern agricultural areas and lower in urban areas. These samples were taken during time of high usage of DDT. Most likely, air concentrations are much lower today. Kraybill (1969) estimated the concentration of DDT in the air to be 0.2 ng/m^3 which is in the lower range of Stanley's reported values. Several recent studies which have monitored levels of DDT in the atmosphere are summarized in Table 4.

TABLE 4

Atmospheric DDT Residues

Location and Date	Number of samples	DDT, 10^{-9} g/m^3	Reference
1.			
Continental data			
Mississippi Delta 1972 1973 1974	156 (3-yr total)	99.5 mean of 16.0 monthly 11.9 average levels	Arthur, et al. (1976)
Kingston, FL, 1973-75	6	0.05 - 0.8	Bidleman, et al. (1976)
Sapelo Island, GA, 1975	6	0.02 - 0.07	Bidleman, et al. (1976)
Organ Pipe Natl. Pk., AZ, 1975	6	0.20 - 0.7	Bidleman, et al. (1976)
Hays, KS, 1974	3	0.01 - 0.09	Bidleman, et al. (1976)
Columbia, SC, 1976-79	18	0.01 - 0.18	Bidleman and Christensen (1980)

TABLE 4 (cont.)

Location and Date	Number of samples	DDT, 10^{-9} g/m^3	Reference
2.			
Marine data			
Bermuda and North Atlantic 1973	11	0.009 - 0.053	Bidleman and Olney (1974) Harvey and Steinhauer (1974)
Bermuda and North Atlantic 1974	25	<0.003 - 0.062	Bidleman, et al. (1976)
Grand Banks, 1973	5	<0.001	Harvey and Steinhauer (1974)
Chesapeake Bay, 1973	3	0.014 - 0.048	Bidleman, et al. (1976)
North Atlantic, 1976	5	0.002 - 0.014	Giam, et al. (1978)
Gulf of Mexico, 1977	10	0.030 - 0.22	Giam, et al. (1980)
English Channel, 1974	6	0.010 - 0.020	Dawson and Riley (1977)
Barbados, W.I., 1977	13	0.0024 (mean)	Bidleman (1979)
Arabian Sea and Gulf of Oman, 1977	8	0.043 (mean)	Bidleman (1979)

In a study on plant workers, Wolfe and Armstrong (1971) estimated respiratory exposure from the contamination of filter pads placed within respirators. The highest exposures reported were 33.8 mg/man/hour for the bagging operation, with a mean 14.11 mg/man/hour. The authors concluded that workers in formulating plants not wearing respirators have significant intake of DDT via inhalation. Wolfe, et al. (1967) used a similar method to determine inhalation exposure and found for airplane flaggers in dusting operations 0.1 to 0.2 mg/man/hour levels.

Although inhalation may not be a significant source of exposure to DDT in terms of the proportion of the daily dose, atmospheric transport of DDT is apparently a significant route of environmental transport (Woodwell, et al. 1971).

Dermal

Absorption of DDT through skin is minimal. Several factors can influence the rate of absorption, such as the condition of the skin or external factors such as temperature. Technical DDT was less toxic dermally to white rats than a large percentage of other pesticides tested by Gaines (1969). In Wolfe and Armstrong's study (1971), most of the exposure was dermal with the exposure ranging from 5 to 993 mg/man/hour. These high exposures did not correlate with significant increases above the general population. This led them to conclude that there was a minimal absorption of DDT in exposed skin areas.

Summary

Hayes (1966) estimated the intake of DDT to be in the following proportions: food - 0.04 mg/man/day, water - 4.6×10^{-5}

mg/man/day, and air - 9 x 10^{-6} mg/man/day. Wessel (1972) calculated the daily dietary intake of DDT and analogues to be 0.027 ppm DDT, 0.018 ppm DDE, and 0.012 ppm DDD. Kraybill (1969) estimated DDT dietary intake to be approximately 85 percent of the total exposure of 30 mg/year. Aerosols, dust and cosmetic exposure were estimated as 5 mg/year, with air and water intakes of 0.03 and 0.01 mg/year, respectively.

From these estimates, it is concluded that the maximum total intake of DDT and analogues does not exceed 0.1 mg/man/day and is probably today considerably less, due to restriction in its use. Since dermal, inhalation, and water intake account for less than 10 percent of the total dosage, and in most recent estimates, dietary intakes are 0.008 mg/man/day, the actual total dose per day is estimated to be approximately 0.01 mg/man/day or 3.65 mg/year.

PHARMACOKINETICS

Absorption

DDT and DDE are absorbed from the gastrointestinal tract with high efficiency characteristic of dietary fat. Maximum lipid solubilities reach 100,000 ppm. In as much as DDT and metabolites ingested are contained primarily in fat-bearing foodstuffs such as dairy products, meat, and poultry, the absorption of dietary DDT approaches the 95 percent absorptive values for these dietary fats. Over 65 percent of labeled DDT and metabolites were found in the 9-day bile collections of treated rats (Jensen, et al. 1957).

Determinations of absorption and assimilation of ingested DDT in humans have been studied by following the serum and adipose lipid concentrations of the compound after chronic ingestion

(Morgan and Roan, 1971). Highest concentrations were found in serum three hours after ingestion of DDT. These concentrations remained above pre-dose level for at least 14 hours but returned to base level within 24 hours. Serum levels reflect a relatively slow uptake and assimilation consistent with physiological dependence on intestinal fat absorption. With a dosage of 20 mg intestinal absorption proceeded faster than transport from the vascular compartment into tissue storage. Absorption of this entire dose was completed within 24 hours. One subject ingested a total of 2.82 g technical DDT; approximately 85 percent was stored in body tissue or excreted in the urine. The authors concluded that several factors collectively cause storage values of DDT to underestimate absorptive efficiency.

Distribution

DDT and its metabolites have been found in virtually all body tissues, approximately in proportion to respective tissue content of extractable tissue lipid, except in the brain. Adipose/blood ratios of DDT have been variously estimated from 140 to 1,000; more recent estimations indicate that the ratio is approximately 280 (fat:plasma) (Morgan and Roan, 1977). This ratio represents a dynamic equilibrium between DDT in plasma lipoprotein and in triglycerides stored in fat cells.

Long-term admininstration of DDT to mice and its storage in various tissues have been reported by Tomatis, et al. (1971). Apart from o,p'-DDT, there is direct relationship between the concentration of each metabolite in each organ and the dose to which the animal was exposed. The highest concentration of DDT and

metabolites was found in fat tissue, followed by reproductive organs, liver and kidneys together, and lastly, the brain. The most prevalent stored compound was unaltered p,p'-DDT. Storage levels of o,p'-DDT were proportionally higher in animals receiving the control diet or exposed to the lowest DDT dose. In the reproductive organs and fat, females had considerably greater levels of all three compounds than males, with no storage differences in the kidneys, brain, and liver.

In Rhesus monkeys, Durham, et al. (1963) noted that dosage levels from 0.25 to 10 mg/kg/day technical DDT in the diet produced a maximum storage in fat by six months, which was not increased by DDT feeding for an additional period of seven years. Of interest is the fact that no DDE was detected in the fat of these monkeys. However, high levels of DDE storage were found in monkeys fed DDE, indicating an inability to convert DDT to DDE.

Human adipose storage decreases in the order DDE > p,p'-DDT > DDD. Serum and adipose concentrations of DDE rise slowly to DDT ingestion with the peak some months following termination of dosing. In contrast, levels of DDT, DDD, and o,p'-DDT decline more rapidly. Fitted exponential curves in man suggest that 25 percent of stored material should be lost within a year after the last administration. Elimination of very low levels from storage of DDT proceeds much more slowly than disposition of the large stores of DDT accumulated by occupationally exposed or dosed volunteers. Thus, when DDT in fat amounts to 100 ppm, the chemical is lost at a rate of 4.1 mg/day or 0.24 percent of the total store. When, after two years, the load has decreased to 40 ppm, the loss rate falls to

0.2 mg/day or 0.10 percent of store; projected to 5 ppm, storage loss is 0.03 mg/day DDT or only 0.04 percent of body stores (Morgan and Roan, 1971).

Hayes, et al. (1971) have shown that subjects ingesting high doses up to 35 mg/kg/day DDT reach a storage plateau sometime between 18 to 22 months (Figure 1). Volunteers had mean adipose concentrations of 281 mg/kg with a high of 619 over a 21-month period. DDE reached levels as high as 71 mg/kg with a mean of 25.8 mg/kg in 21 months, but the values increased during recovery to a peak of 563 mg/kg approximately two years after dosing, and fell only slightly to 50.8 after a 3-year recovery. Over a 5-year recovery period, the concentration of DDE in fat as a percentage of all DDT derived material rose from 26 to 47 percent.

The preceding data are consistent with the known fact that DDE is very slowly eliminated from the body and has the higher affinity for storage. The average North American adult, with 17 kg of body fat, contains approximately 25 mg of DDT and 75 mg of DDE. Storage loss data predict that, if dietary intake were eliminated, most of the DDT would be lost within one or two decades, but DDE would require an entire lifespan.

It has been suggested by a number of investigators that DDT levels reflect recent exposure to DDT, while DDE levels correlate well with long-term exposure and storage capacity of the human body (Morgan and Roan, 1971; Edmundson, et al. 1969b). In occupationally exposed workers, Laws, et al. (1967) determined the concentrations in fat of DDE expressed as DDT to be 25 to 63 percent of total

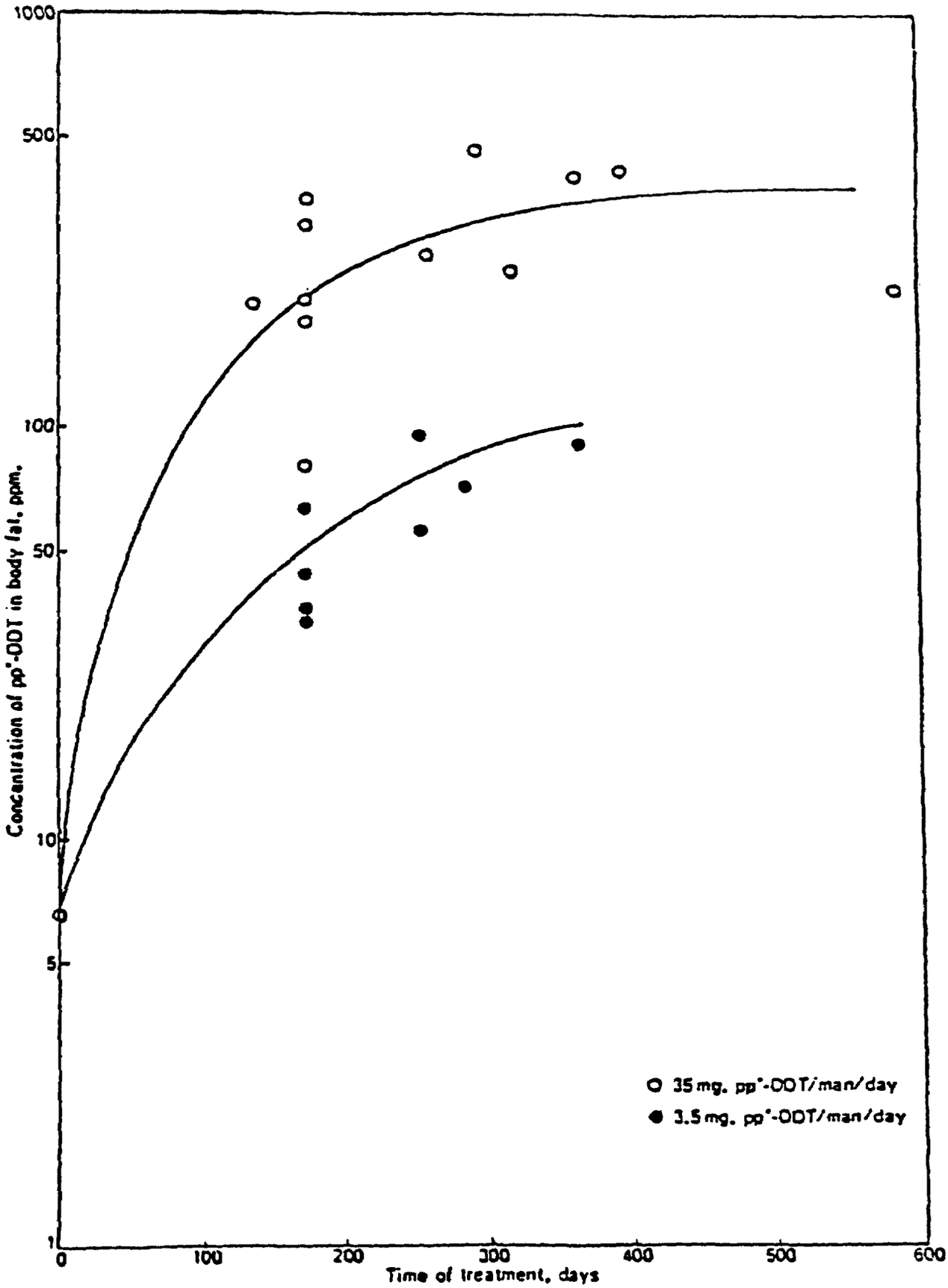

FIGURE 1

Increase of the Concentration of p,p'-DDT in the Body Fat of Men with Continuing Intake of p,p'-DDT*

Source: Hayes, et al. 1971

DDT-related material. This is in contrast with 72 to 92 percent found in the general population.

Tissue storages of DDE in the general population originate almost entirely from dietary DDE rather than DDT conversion (Morgan and Roan, 1971).

A comparison of DDT and DDE storage in the U.S population is shown in Table 5 (U.S. EPA, 1975). Mean levels of DDT in human adipose tissue show a downward trend from 7.95 ppm in 1971 to 5.89 ppm in 1973. Overall DDE levels on the other hand, do not show a similar trend; long-term storage is reflected in the slightly increased percentage of the total DDT found as DDE.

A simple linear model has been developed by Durham, et al. (1965b) to describe the relationship between the concentration of DDT in the body fat of man and the daily dose of this compound. The equation is: $\log C_1 = 0.7 \log I + 1.3$, where C_1 is the fat storage of DDT in ppm and I is the DDT intake in mg/man/day. This equation is in good agreement with storage found by other investigators and is represented in graphical form in Figure 2.

At high levels of exposure, human volunteers have demonstrated a steady state of storage or plateau which is exponentially approached within 18 months. This plateau level is proportional to the dose administered (Figure 1).

Harris and Highland (1977), in summarizing recent studies by the U.S. EPA, reported mean DDT levels in human milk have been measured to be 529 µg/kg fat (99 percent of 1,400 women) with a maximum level at 34,369 µg/kg fat. In the same report, 100 percent

TABLE 5

National Summary of Total DDT Equivalent Residues in Human Adipose Tissue*
(Total U.S. Population Basis)

Year	Sample Size	Frequency	Geometric Mean	Percent DDT found as DDE
FY 1970	1,412	99.3%	7.87 ppm	77.15%
FY 1971	1,616	99.75%	7.95 ppm	79.71%
FY 1972	1,916	99.95%	6.88 ppm	80.33%
FY 1973	1,092	100.00%	5.89 ppm	81.19%

Total DDT equivalent = (o,p'-DDT + p,p'-DDT) + 1.114 (o,p'-DDD + p,p'-DDD + p,p'-DDE + o,p'-DDE)

*Source: U.S. EPA, 1975

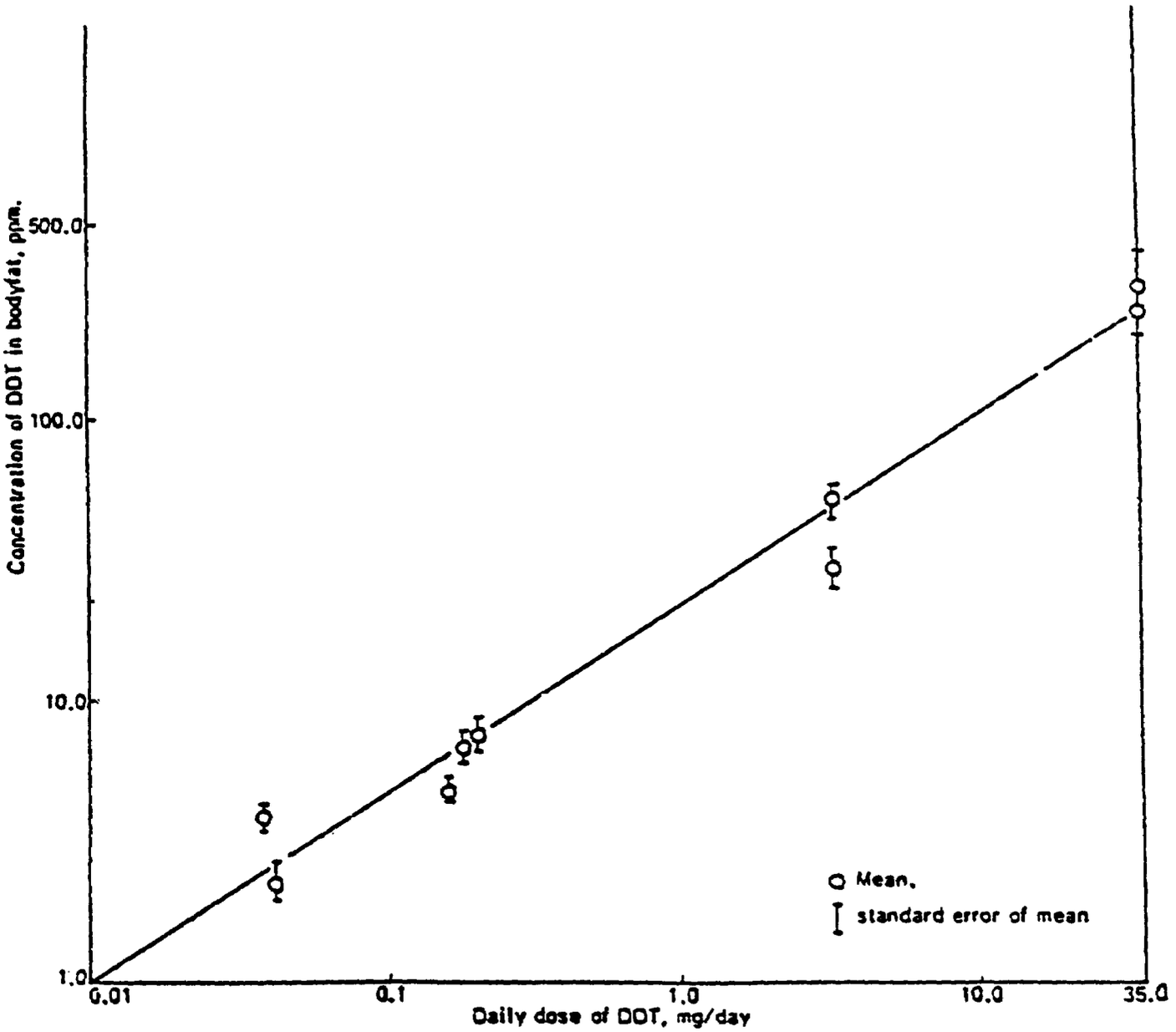

FIGURE 2

Relationship Between the Concentration of DDT in the Body Fat of Man and the Daily Dose of that Compound

Source: Hayes, et al. 1971; Durham, et al. 1965b

of the women sampled had DDE residues in their milk. The mean and maximum levels were 3,521 and 214,167 µg/kg fat, respectively.

Metabolism

The metabolism of DDT has been well established in several mammalian species. Generally, two separate reductive pathways produce the primary endpoint metabolites, DDE and DDA. As seen in Figure 3, a generalized outline of the metabolism of DDT, the predominant conversion is of DDT to DDD via dechlorination. This is the first product in a series which results in metabolites which are later excreted. The other primary pathway proceeds via reductive dehydrochlorination which results in the formation of DDE, the major storage product in animals and humans.

Peterson and Robison (1964) showed convincingly that DDD was the intermediate metabolite leading to DDA. Adult male rats were treated acutely by gavage with 100 mg/kg purified DDT and sacrificed 4 to 60 hours later. Liver samples yielded primarily DDT and DDD, in a ratio of 14:1. Rats fed a diet of 1,500 mg/kg purified DDT were sampled at 6 days; the livers yielded DDT, DDD, and DDE in the ratios of approximately 3:5:1. Additional rats given 1,000 mg/kg DDD in identical manner of the DDT treatment showed DDD and DDMU in a ratio of 1:13. Liver and kidney samples of DDE-treated rats yielded only unchanged DDE, and the urine from a 2-week diet of a 1,000 ppm DDE showed no detectable DDA. Furthermore, rats treated acutely with DDMU were able to biologically convert this compound to DDMS. Similarly, DDMS administration produced DDNU in ratios of 2:5 in the kidney and 3:1 in the liver.

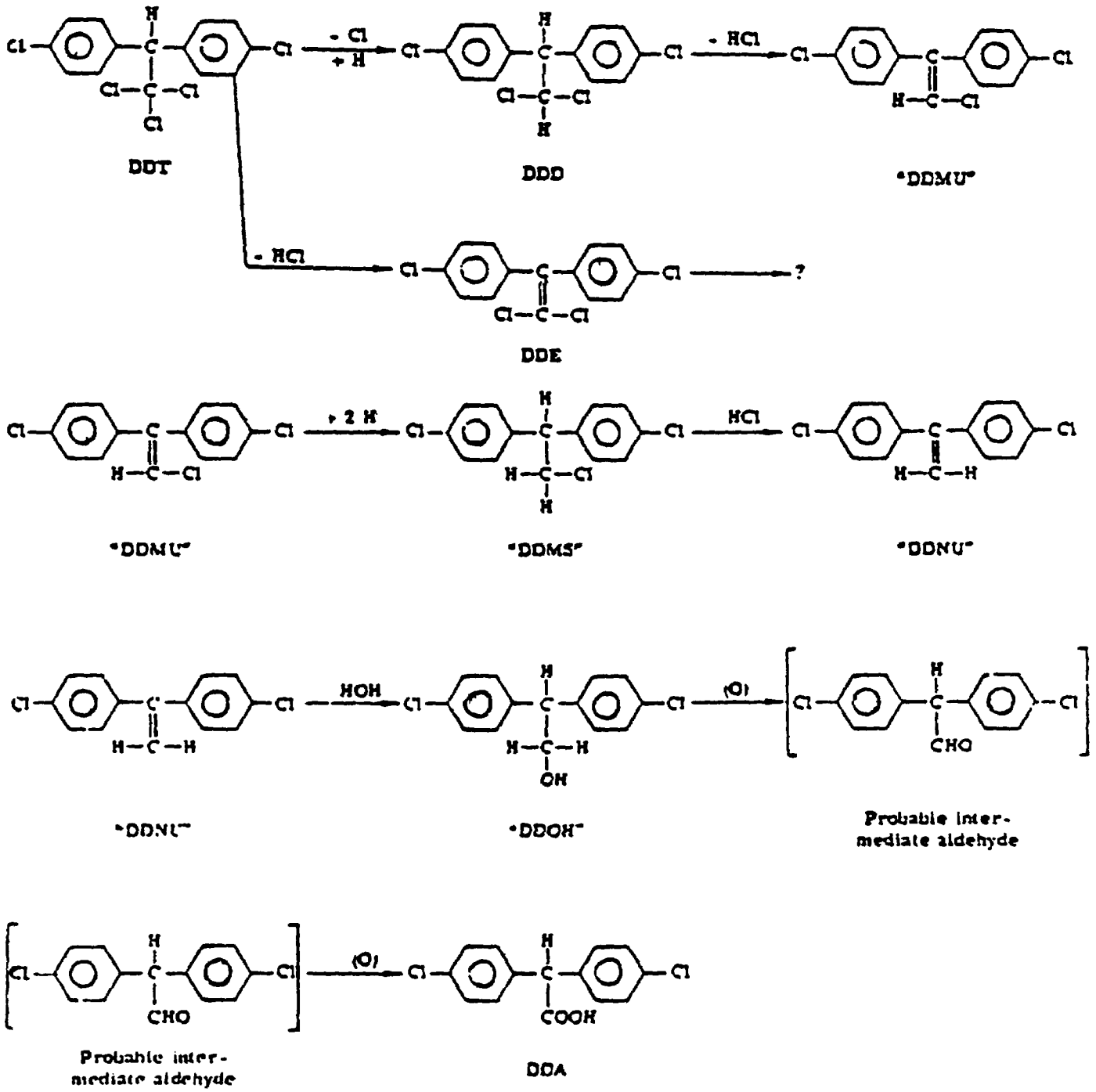

FIGURE 3

Metabolic Products of p,p'-DDT in the Rat

Source: Peterson and Robison, 1964

The final conversion step of DDNU to DDA by hydroxylation occurs more slowly. Short-term 6-hour exposure to DDNU produced minimal amounts of DDOH. However, analyses of liver and kidney tissue from rats fed 500 ppm DDNU diet contained equal quantities of DDNU and DDOH, and the urine collected provided identification of DDA. Each degradation product from DDT to DDNU when fed to rats, was able to eventually exhibit DDOH and DDA in the urine. The aldehyde shown in Figure 3 was postulated by the authors as a briefly existing intermediate between DDOH and DDA in mice.

Recent studies with pregnant rats using radiolabeled ^{14}C-p,p'-DDT give evidence of the sites in which a metabolite conversion occurs. Thin layer chromatography of various tissues following treatment with 0.9 mg ^{14}C-DDT was utilized to determine the relative percentages of the metabolites produced. In the liver, from 12 to 24 hours the ratio of DDT, DDD, and DDE was unchanged at approximately 3:3:1, a ratio similar to that found by Peterson and Robison (1964) of 3:5:1 in male rats. Liver activity for DDT conversion is much higher in the adults in comparison to neonates. The results for the metabolites recovered from different tissues and fetuses 8 to 10 hours post exposure are shown in Tables 6 and 7 (Fang, et al. 1977). DDE was the major metabolite in all tissues. DDD was a minor metabolite, with the exception of spleen, in which DDD and DDE were equal. DDA was detected in high levels in the lung, intestine, kidney, and blood; in lower levels in the spleen, placenta, and fetus; and was undetected in muscle tissue, the heart, pancreas, and brain. These observations suggest that enzymatic activity for the dehydrochlorination and reductive

TABLE 6

Concentration of ^{14}C-DDT and its Metabolites in the Tissues of Infant Rats after Consuming Milk from Dam that received an Oral Dose of 0.9 mg ^{14}C-DDT and in the tissues of the Dams (µg DDT and Equivalent per g Dry Tissue)*

Elapsed time (days)[a]	Stomach content (milk)[b]	Stomach	Blood	Liver	Kidney	Intestine	Lung	Heart	Brain	Carcass
						Infant Rats				
1(4)	15.26±3.27	4.82	0.72±.34	13.93±2.50	2.50±0.53	13.64±3.37	3.30±0.97	1.21±.22	1.23±.35	6.34±2.22
2(4)	4.56±0.46	2.81±.13	1.59±.52	14.23±6.94	4.35±0.84	13.48±6.36	5.05±1.60	1.57±.56	2.24±.94	9.11±1.12
3(4)	3.49±1.09	2.31±.06	1.70±.15	12.13±4.26	4.73±0.71	11.09±3.72	6.23±1.78	1.91±.64	1.83±.94	10.98±1.63
4(4)	3.73±0.35	2.18±.15	1.59±.34	8.29±1.73	3.52±1.23	8.42±2.36	5.25±0.75	2.00±.85	1.83±.72	9.64± .57
7(4)	1.62±0.18	1.59±.28	1.23±.29	5.96±1.78	3.08±0.72	8.07±3.19	4.26±0.79	1.13±.26	1.11±.62	7.09± .57
11(2)	1.73	1.42	1.21	5.93	3.13	5.98	4.25	1.81	1.30	6.16
14(3)	0.75	1.03	0.44	4.64	2.22	5.42	1.97	1.04	0.62	4.39
21(2)	1.33	0.99	0.40	2.39	0.76	1.95	1.13	0.60	0.28	2.42
28(2)	0.48	0.70	0	1.11	0.20	0.95	0.52	0.18	0.14	1.87
						Dams				
14	-	-	0	0.68	0.07	0.20	1.12	0.28	0.06	-
28(2)	-	-	0	0.50	0.12	0.78	0.40	0	0.10	-

[a]Number of neonates used

[b]Values are means ± standard deviation

*Source: Fang, et al. 1977

TABLE 7

^{14}C-DDT and its Labeled Metabolites in Different Tissues of Pregnant Rats 8 or 10 hours after Receiving an Oral Dose of ^{14}C-DDT*

Tissue	Radioactivity recovered (%)	R_F Values				
		0.02-0.04 DDA	0.36-0.43 DDD	0.46-0.52 DDT	0.56-0.61 DDE	75
Blood	83	26	10	31	33	1
Brain	100	0	18	36	46	0
Fetus	86	8	20	25	35	12
Heart	100	0	10	67	20	3
Intestine	93	39	18	11	31	1
Kidney	88	24	5	24	34	13
Lung	100	41	6	8	32	14
Muscle	99	0	0	9	72	19
Pancreas	100	0	5	15	59	21
Placenta	100	4	9	5	49	27
Spleen	83	11	32	14	36	0

*Source: Fang, et al. 1977

dechlorination reactions transforming DDT to DDD and DDE are present in all tissues, whereas the enzymes involved in the hydrogenation and hydroxylation steps changing DDD to DDA are absent in the brain, heart, pancreas, and muscle tissue of the rat.

The metabolism of o,p'-DDT in rats shows no striking differences to that of p,p'-DDT. Feil, et al. (1973) were able to detect 13 different metabolites in the rat excreta by nuclear magnetic resonance spectra. Besides o,p'-DDD and o,p'-DDA, a number of additional ring-hydroxylated DDA forms were present. Serine and glycine conjugates and o,p'-dichloro-benz-hydrol were identified in the rat urine. These results indicate that o,p'-DDT is extensively metabolized.

Radiolabeled o,p'-DDD given orally in a 100 mg dose to rats yielded, in both feces and urine, o,p'-DDA, aromatic 3,4-monohydroxy- and 3,4-dihydroxy-substituted o,p'-DDA. Comparison of urinary excretion of o,p'-DDD metabolites of rats and humans are fundamentally similar. Hydroxylation occurs primarily at the 3 and 4 positions. Humans show a higher percentage of total dose excreted in the urine than rats, 10 to 50 percent versus 3 to 7 percent. Serine and glycine conjugates are excreted in the urine of man and rat (Reif and Sinsheimer, 1975).

The metabolism of DDT in the mouse follows essentially the same pathways as the rat (Gingell and Wallcave, 1976). No species differences in overall rates of metabolism of DDT, as measured by urinary excretion of ^{14}C were observed. Further studies investigating chronic exposure up to four months, have demonstrated fundamental differences in the metabolic and physiological handling of

DDT among other rodent species. Both Swiss and CF_1 mice produce small but significant amounts of DDE in urine, whereas none was found in hamster urine (Gingell, 1976). With long-term feeding, the mouse increasingly eliminates DDE, and at the termination of the experiment, nearly as much DDE as DDA was found (Gingell and Wallcave, 1976). The authors suggest that DDE may be the proximate hepatotumorigenic metabolite in mice, in as much as hamsters are not susceptible to DDT tumorigenesis and do not form DDE. Additionally, hamsters are resistant to toxic effects of DDT up to 2,100 mg/kg (Agthe, et al. 1970).

Two major studies by Hayes, et al. (1971) and Morgan and Roan (1977) are the basis for what is known of the metabolism of DDT in man and are here described. Hayes, et al. (1971) performed two studies, exposing volunteers from a U.S. penitentiary to technical or recrystallized p,p'-DDT at rates from 3.5 mg to 35 mg/man/day. In the first study, 10 subjects were studied: three for one year at 3.5 mg/man/day and seven for one year at 35 mg/man/day. In the second study, 24 men could be followed for a period of over four years. They consisted of four groups: G1 - a control, whose diet was estimated as having 0.18 mg/man/day DDT; G2 - receiving 3.5 mg technical DDT (85 percent p,p'-DDT); G3 - receiving 35 mg technical DDT (85 percent p,p'-DDT); and G4 - receiving 35 mg recrystallized p,p'-DDT.

Roan, et al. (1971) and Morgan and Roan (1977) measured the concentrations of p,p'-DDE, p,p'-DDD and p,p'-DDA in blood, fat, and urine in response to oral dosing with these compounds. Four volunteers ingested technical DDT doses ranging from 5 to 20 mg/day

for up to six months. The total dose ingested ranged from 0.06 g to 2.82 g. Two volunteers ingested a total dose of 0.45 g p,p'-DDE in a 3-month period. A single volunteer was used for each dosing of DDD and DDA for total dosages of 0.41 g and 0.105 g, respectively.

From these studies, Morgan and Roan (1977) concluded that the conversion of DDT to DDE occurs with considerable latency. The magnitude of conversion at these levels was estimated to be less than 20 percent conversion in the course of three years. An upper trend in DDE fat storage over this time course may be due to release of stored DDT and further conversion to DDE, but no more than one-fifth of the absorbed DDT ultimately undergoes this conversion. The o,p'-isomer was not found to be present in fat and blood of the subjects. DDE-dosed subjects did not exhibit any significant excretion of p,p'-DDA in excess of predose values. Dose-dependent increases in DDD blood levels with DDT dosing indicated the existence of this metabolic pathway. Urinary DDA excretion and serum DDD concentrations showed increases with DDT dosage and declined after dosing ended. Conversely, DDE exhibited an upward trend for months after dosing. These facts further support the mutually exclusive role of DDD, rather than DDE, in the formation of the urinary metabolite, DDA. Taken together, these results strongly confirm that the metabolism of DDT in man is identical to the pathways reported by Peterson and Robison (1964) for the mouse. Metabolic conversion of DDT by dechlorination to DDA proceeds more rapidly and accounts for approximately one-fifth of the DDT load, which is excreted in the urine. DDE, or the storage metabolite, is

produced from DDT more slowly, via dehydrochlorination, and overall conversion will be approximately 20 percent in three years.

Excretion

Studies were conducted by Wallcave, et al. (1974) on the excretion of DDT metabolites in hamsters and mice. Of the ingested dose of between 22 to 29 mg per animal over a 4-month period, 12 to 14 percent was recovered in the urine as DDA or DDE. Steadily increasing amounts of DDE excretion were observed in mice with long-term feeding, whereas the hamster had no DDE present. Approximately 9 percent of ingested DDT was found in fecal excretion as DDD or DDT in mice, as compared to 3 percent in hamsters. These species seem to have less biliary excretion than the rat, in which 65 percent of a DDT dose can be found in the bile collections and large amounts of DDT conjugate are found in the feces (Jensen, et al. 1957).

The excretion of DDT was investigated in human volunteer studies of Hayes, et al. (1971) and Roan, et al. (1971), previously described. Excretion of DDA in the urine increased rapidly in the first few days following a gradual increase in the subjects dosed with 35 mg/man/day to a steady level of approximately 13 to 16 percent of the daily dose. DDA excretion fell rapidly following cessation of dosing. Since storage levels did not increase after reaching steady state, these volunteers were apparently able to excrete the entire dose of 35 mg/day. This is probably due primarily to excretion of DDT from the gut, inasmuch as only 5.7 mg/day of all DDT isomers were found in urine. Gut organisms have a

demonstrated capacity for degradation of DDT to DDD and DDA and may be important in fecal excretion.

Occupationally exposed workers have been shown to have significantly increased levels of DDA excretion in the urine. Ortelee (1958) classified individuals as heavy, moderate and slight exposure groups in formulating plants and found a good correlation between exposure and DDA in the urine. Laws, et al. (1967) were not able to find DDA in urine samples from all persons of the general population due to insensitivity of analytical methods at the time. In workers, increased levels of DDA excretion were found, but paradoxically, DDE was found in only slightly higher concentrations in exposed workers versus the general population with no correlation with increasing work exposure. Estimations of total intake of DDT based on DDA in urine are in good agreement with estimations of intake based on the calculations of DDT in fat by Durham, et al. (1965a).

Morgan and Roan (1977) have calculated from excretion measurements the following rank order of loss rates from storage (from fastest to slowest): DDA, DDD, o,p'-DDT, p,p'-DDT, and p,p'-DDE. Differences in excretability from one end of the scale to the other are very great, water solubility being a possible important variable. Interspecies differences also exist in the capacity for unloading stored DDT. Man, as compared to the rat, dog or monkey, exhibits a considerably slower rate of loss, which may be related to differences in renal handling of the pesticide. If dietary intake were completely eliminated, most of the DDT would be lost in

10 to 20 years but DDE would require almost an entire lifespan for removal.

EFFECTS

Acute, Subacute, and Chronic Toxicity

Acute toxic effects show central nervous system symptoms, such as hyperexcitability, generalized trembling, convulsions, and paralysis within 5 to 10 minutes following intraveneous (i.v.) administration and a latent period of several hours for oral dosing in experimental animals. LD_{50} values for rats typically range from 100 to 400 mg/kg orally and 40 to 60 mg/kg i.v. (Negherbon, 1959; Hayes, 1963). Dermal exposure in rats was toxic at 3,000 mg/kg. DDE has an oral LD_{50} in rats of 380 mg/kg in males and 1,240 mg/kg in females; DDA, 740 mg/kg in males and 600 mg/kg in females (Hayes, et al. 1965). The oral LD_{50} of DDT is 60 to 75 mg/kg in dogs, 250-400 mg/kg in rabbits, and 200 mg/kg in mice (Pimentel, 1971).

Studies on acute toxicities in animals indicate that the correlation between pathological symptomatic effect and pesticide level is highest in the brain. Dale, et al. (1963) observed tremors in male rats four hours after administration of DDT, when the brain concentration reached 287 ppm on a lipid basis.

Acute poisoning in man is a rare event, and no well-described case of fatal uncomplicated DDT poisoning has been reported. General symptoms are similar to those found in animals and include dizziness, confusion, and, most characteristically, tremors. In severe poisoning, convulsions and parasthesia of extremities may intervene.

Single ingestion of 10 mg/kg produces illness in some, but not all, subjects. Smaller doses generally produce no illness. Convulsions and nausea frequently occur in dosages greater than 16 mg/kg. Dosages as high as 285 mg/kg have been taken without fatal result, but such large dosages are usually followed promptly by vomiting, so the amount retained is variable (Hayes, 1963).

Although a number of pathological changes have been noted in experimental animals, the most consistent finding in lifetime feeding studies has been an increase in the size of liver, kidneys and spleen, extensive degenerative changes in the liver and an increased mortality rate. In rats, Laug, et al. (1950) observed hepatic alteration with feedings in diet at 5 ppm DDT. At dose levels of 600 and 800 ppm, significant decreases in weight gain and increased mortality were observed in rats (Fitzhugh and Nelson, 1947). The observation that increased mortality results from doses above 100 ppm DDT in the diet is well established in mice (Walker, et al. 1972).

In contrast to the rodent models, Rhesus monkeys fed diets with up to 200 ppm DDT showed no liver histopathology, no decrease in weight gain or food consumption, or no clinical signs of illness. Several monkeys fed 5,000 ppm in the diet had some weight loss prior to early death due to DDT poisoning (Durham, et al. 1963). In one animal, liver pathology consistent with DDT poisoning in other animals was found.

No clinical or laboratory evidence of injury to man by repeated exposure to DDT has been reported. Volunteers ingesting up to 35 mg/day for 21 months had no alterations in neurological signs,

hematocrit, hemoglobin, and white blood cell counts. No changes in cardiovascular status or liver function tests were noted (Hayes, et al. 1971).

Studies of exposed workers by Laws, et al. (1967), Wolfe and Armstrong (1971), and Almeida, et al. (1975) have demonstrated no ill-effects from long-term high levels of exposure, as judged by physical examination and chest X-ray.

Furthermore, the dermal toxicity of DDT in humans is practically nil. A few cases of allergic reaction have been observed, which may be due to the extreme sensitivity of the individual.

Synergism and/or Antagonism

One of the primary concerns about pesticide residues is the possibility that they may act synergistically with other chemicals over a long period to produce cancer. The accumulation and summation of carcinogenic exposure from various sources may present a health problem of great significance.

DDT, a strong inducer in the mixed function oxidase system, potentially could enhance the biological effects of other chemicals by activation or diminish their activities through detoxification mechanisms. Weisburger and Weisburger (1968) were able to enhance the incidence of hepatomas in rats caused by N-fluorenacetamide (2-AAF) by co-administration of DDT. They had previously shown that 2-AAF is metabolized by a mixed function oxidase system (MFO) to the hydroxy intermediate which is carcinogenic. By stimulating liver metabolism with 10 mg/day DDT which, by itself, causes no hepatomas, the percentage of animals bearing tumors from a dose of

1 mg/day 2-AAF for up to 52 weeks rose from 67 to 90 percent in males and from 7 to 33 percent in females.

Conney (1967) observed decreases in phenobarbital-induced sleeping times proportional to the dose of DDT given to rats two days earlier. Doses of 1 and 2 mg/kg of body fat caused a 25 and 50 percent reduction in sleeping time, respectively. This response is due to the greater capacity of the MFO system to detoxify phenobarbital to a more readily excretable form. Similar effects have been seen for Librium, methyprylon, and meprobamate in rats (Datta and Nelson, 1968).

Enhancement of metabolic activity has been demonstrated in workers occupationally exposed to several insecticides, DDT included (Kolmodin, et al. 1969). In these workers, the half-life of antipyrine was significantly decreased in comparison to controls.

Deichmann, et al. (1967) evaluated the synergistic effects of aramite (200 ppm), DDT (200 ppm), methoxychlor (1,000 ppm), thiourea (50 ppm), and aldrin (5 ppm) given singly or in combination to rats. These dosages were approximately 50 percent of the levels reported to induce liver tumors. Rats fed combinations of aramite, DDT, methoxychlor, and thiourea, with a total tumorigenic dose of 200 percent had a 17 percent tumor incidence. Similarly, a combination of aramite, DDT, methoxychlor, and aldrin had a 10 percent tumor incidence. Single chemical feedings had the following incidences of tumors: aramite - 23 percent, DDT - 17 percent, methoxychlor - 18 percent, thiourea - 28 percent, and aldrin - 25 percent. Control rats had 23 percent tumors. Since both total tumors and liver tumors were essentially the same in control versus

experimental groups, those authors concluded that the compounds did not act in an additive manner and further suggested that the mixtures might have an antagonistic effect in the reduction of tumors below control.

Walker, et al. (1972) produced liver tumors in mice with either 100 ppm DDT or 5 ppm dieldrin. Two types of histology were scored: simple nodular growth of parenchymal cells (A), and papilliform adenoid growth of tumor cells (B). Combination of the two chemicals showed an overall increase in tumor numbers in males only, 53 to 88, when compared to 100 ppm DDT alone. What is most striking, however, is that for both males and females, there was a significant shift in proportion to the more tumorigenic type B phenotype with the combined feeding.

The induction of the hepatic enzymes occurs in animal models and possibly in occupationally exposed workers, as shown by increased drug metabolism. However, the tumorigenicity data present inconsistent findings with respect to activation or detoxification, depending on the agent used. This is not an uncommon paradox when dealing with metabolic induction. The effects on human health as a result of low level exposure and synergistic/antagonistic interactions with other chemicals are unknown.

Teratogenicity

Minimal teratogenic effects have been reported following high acute dosages. Hart, et al. (1971) showed that DDT has an effect on prematurity and causes an increase in the number of fetal resorptions in rabbits given 50 mg/kg on days 7, 8 and 9 of gestation. In the experimental group, 25 percent of the implantations were

reabsorption *in utero* in comparison to 2 percent in the controls. The weight of the viable fetuses were significantly lower in the treated animals. The dose used in the experiment corresponds to one-sixth to one-tenth of the acute LD_{50} for the species.

Low level exposure to DDT exerts an adverse effect on reproduction of several avian species. While data for mammalian species are meager, published reports to date indicate that dietary intake has little or no effect on the reproductive success of laboratory animals. Dietary DDT at 7 ppm was fed to BALB/C and CFW strains of Swiss mice for 30 days prior and 90 days post-breeding. In the BALB/C strains, there was a slight reduction in overall fertility, but fecundity (litter size) was greater than control values. With the CFW strain, no differences in fertility or fecundity were noted (Ware and Good, 1967).

Ottoboni (1969) studied the effect of DDT at levels of 0, 20, and 200 ppm on fertility, fecundity, neonatal morbidity, and mortality through two successive generations in Sprague-Dawley rats. Neither alteration in sex ratios nor any evidence of teratogenic effect was found among live or stillborn young. Litter size, weights at birth and weaning showed no differences between treated and control. Poor survival of the newborn pups to weaning age in the 200 ppm group was observed. This finding was compromised by large losses in the control, yet the 20 ppm diet group was unaffected. Viability of young was high for all three groups in the F_1 generation breedings. Of the other indices studied, fecundity, fertility and mortality, none was significantly affected. The only significant finding was an increase in ring tail, a constriction of

the tail followed by amputation, in the offspring of mothers whose diets contained 200 ppm DDT.

Krause, et al. (1975) noted a damaging effect on spermatogenesis in rats which was somewhat persistent for 90 days, and fertility was markedly reduced. This followed acute 500 mg/kg dose on days 4 and 5 of life or 200 mg/kg from day 4 to day 23. In this experiment, the administered dosages are close to the LD_{50} for the species; therefore, these results cannot be considered conclusive, since acute toxicity will alter other physiological parameters that could affect fertility.

Both p,p'-DDT and o,p'-DDT have been shown to possess estrogenic activity in rodents and birds (Welch, et al. 1969; Bittman, et al. 1968). Increases in uterine wet weight, and uptake of labeled glucose into various precursors which are in competition with estrodiol 17B for uterine binding sites have been demonstrated.

The importance of the estrogenic activity of low level DDT exposure is difficult to estimate. Since fertility in mammals is dependent upon complex hormonal interactions, chemical interference may represent a hazard. As an example, Ottoboni (1969) suggested that 20 ppm of DDT in the diet had an adverse effect on the subfertile females in their reproductive prime and observed a greater fertility or protective effect in aging female rats as compared to controls. In a later study by Wrenn, et al. (1970) long-term feeding of o,p'-DDT to rats did not interfere with normal reproduction nor were estrogen-sensitive physiological parameters significantly affected.

Mutagenicity

DDT has not shown mutagenic activity in any of the bacterial test systems thus far studied. McCann, et al. (1975) found no increased frequency of reversions in Salmonella typhimurium strains TA-1535, 1537, 98, or 100 with 4 µg/plate DDT. In addition, DDE was nonmutagenic in this system; neither DDT nor DDE were positive with S-9 microsomal activation. Marshall, et al. (1976) confirmed these studies with doses up to 2,500 µg/plate DDT and 1,000 µg/plate DDE. No inhibition of growth was seen in the E. coli Pol-A strains with 500 ug of DDT and the metabolites DDD and DDE (Fluck, et al. 1976). DDT was also negative in the rec-assay with Bacillus subtilis (Shirasu, et al. 1976).

Fahrig (1974) reviewed the activity of DDT and its metabolites DDE, DDD, DDOH, and DDA in several other bacterial systems. All metabolites were negative, as judged by resistance to 5-methyltryptophane and streptomycin in liquid holding tests. Back mutation to prototrophy was negative in two strains of Escherichia marcescens and was negative to galactose prototrophy in E. coli.

The only positive result found in any of the bacterial test systems was reported by Buselmaier, et al. (1972) upon the administration of DDD to mice and assaying for back mutation of Salmonella typhimurium and E. marcescens following incubation in the peritoneum in the host-mediated assay. However, DDT, DDE, and DDA were found negative by this method.

In summary, with the exception of the metabolite, DDD, in the host-mediated assay, no genetic activity has been detected in the prokaryotic test systems.

Tests on eukaryotic yeast cells have been uniformly negative. Fahrig (1974) investigated the effect of DDT and various metabolites on mitotic gene conversion in Saccharomyces cerevisiae, which detects single strand breaks of the DNA. Host-mediated studies with DDT, DDD, and DDE of cells incubated in the testis, liver, and lung of rats were also negative. Clark (1974) found no significant increases in mutagenicity of conidia of Neurospora crassa incubated in vitro and in vivo with the host-mediated assay.

Vogel (1972) measured X-linked recessive lethal mutations in Drosophila melanogaster and found activity for DDT and DDA, with negative results for DDE, DDD, and DDOH.

Clark (1974) examined the relationship between spermatogenesis stages in D. melanogaster and the effect of DDT on dominant lethality and chromosome abnormalities. Sequential breedings of the treated males with virgin females at three day intervals indicated that DDT causes an increase in dominant lethality in early spermatid and spermatocyte stages. This increased lethal effect was correlated with an increase in nondisjunction.

In mammalian systems, the mutagenic activity of DDT and its metabolites is relatively weak. This is evidenced by the fact that, depending upon the dose and route of administration, and the species sensitivity of the test organism, reported studies are negative or marginally positive.

High doses of technical DDT administered orally to mice at 150 mg/kg/day for two days (acute) or 100 mg/kg DDT twice weekly for 10 weeks (chronic) showed significant increase in the number of dead implants per female. Acute treatment showed maximum sensitivity in

induction of dominant lethals in week 5 and chronic treatment in week 2, with continued increases above control through week 6. Chronic, but not acute, dosing caused significant reductions in sperm viability and a reduction of cell numbers in all stages of spermatogenesis (Clark, 1974).

Oral feeding of two strains of mice at lower levels (1.05 mg/kg/day) showed little effects in reproductive response. Both CFW and BALB/C strains of Swiss mice fed DDT showed lesser parent mortality than control. Neither fertility, as measured by pairs producing young, or fecundity, as measured by litter size, was statistically different from the contol. Number of litters per pair was not diminished (Ware and Good, 1967).

Two additional studies have been reported with negative results for dominant lethality in mice (Epstein and Shafner, 1968; Buselmaier, et al. 1972). Intraperitoneally (i.p.) treated male rats in doses up to 80 mg/kg for five days showed no effect in dominant lethality or fertility (Palmer, et al. 1973). Five-day oral doses of 25, 50, or 100 mg/kg given to males bred sequentially for six weeks, showed a statistically significant effect in implantation loss only in week three at 100 mg/kg level.

Oral feeding of technical DDT at 20 and 200 ppm/body weight in the diet of Sprague-Dawley rats for two generations produced no apparent effect on fertility, fecundity, neonatal morbidity, or mortality through two generations (Ottoboni, 1969). By contrast, juvenile male rats of the Wistar Han strain, fed 500 mg/kg on days 4 and 5 after birth (acute) and 200 mg/kg pure DDT daily from day 4 to 23 (chronic) showed damaging effects on spermatogenesis: testicular

weight, tubular diameter, wall thickness, and number of spermatogonia (Krause, et al. 1975).

There are relatively few papers reporting the effect of DDT and metabolites on mammalian chromosomes. Johnson and Jalal (1973) studied the effect of DDT on the bone marrow of i.p. injected BALB/C mice exposed to one single administration of 100, 150, 200, 300, and 400 ppm/body weight. Doses of 150 ppm and greater caused a significant increase in the number of cells with fragments; sticky cells were significantly increased at all concentrations. Smaller doses were tested by Larsen and Jalal (1974) in brown and BALB/C mice: 25, 50, 100, and 250 ppm did not significantly affect the number of gaps, stickiness or mitotic indices, but deletions and gaps plus deletions were significantly higher or approached the significant levels at 50 ppm and higher concentrations.

Rats treated by i.p. or by gavage with doses ranging from 20 up to 100 ppm/body weight did not show a dose-response relationship or an increase in percent of chromosomal aberrations over the controls (Legator, et al. 1973).

DDE, but not DDT, caused an increase in chromosome aberrations in a Chinese hamster cell line (V79) at 30 and 35 µg/ml (Kelly-Garvert and Legator, 1973).

Palmer, et al. (1972) found a significant increase in cells with structural aberrations when an established cell line of the kangaroo rat, Potorus tridactylis apicalis was exposed to 10 µg/ml p,p'- and o,p'-DDT, p,p'- and o,p'-DDD, and p,p'-DDE. The p,p'-DDA was the least toxic among DDT metabolites, since only a concentration of 200 µg/ml caused a cytopathic effect, whereas DDT, DDD, and

DDE - p,p' and o,p' - were toxic at 20 and 50 µg/ml. Mitotic inhibition was intense in cultures treated with o,p'- and p,p'-DDT (40 percent and 35 percent more, respectively, than in the control). Cultures exposed to p,p'- and o,p'-DDD and DDE had indices of 20 to 25 percent below the control; almost no inhibition was observed with p,p'-DDA. The rate of chromosomal aberrations depended upon the isomer used: p,p'-DDT, DDD, and DDE caused a twofold increase as compared to the o,p' isomers. At 10 µg/ml p,p'-DDT, DDD, and DDE caused chromosome damage to 22.4, 15.5 and 13.7 percent of the cells, respectively. Approximately 12 percent of the abnormal cells produced by p,p'-DDT and p,p'-DDE had rearrangements. Only 10 percent of the cells treated with p,p'-DDD had rearrangements. The o,p' isomers did not produce exchanges.

Mahr and Miltenburger (1976) confirmed the fact that DDA is the least effective of DDT metabolites in producing cytogenetic damage and inhibiting proliferation in the Chinese hamster cell line B14F28. The proliferation rate after a four-hour treatment was inhibited most strongly by DDD (at 75, 45, and 22 ppm), followed by DDT (81 ppm) and DDE (88 ppm); 100 ppm DDA did not produce any effect. The continuous presence of DDT (8 ppm) in the medium for three months did not result in an altered proliferation rate in cultures. Chromosome damage (i.e., breakage and gap formation) was observed with 41 and 81 ppm DDT, 45 and 75 ppm DDD, and 44 and 88 ppm DDE. Here again DDA was the least effective in producing chromosomal damage; at the highest concentration chromosomal gaps, but not breaks, were increased. No chromosomal structural anomalies were found in the experiment.

Hart, et al. (1972) found no increase in chromosomal aberrations in human or rabbit lymphocyte cultures exposed to 1, 5, 10, 30, 50, and 100 µg/ml DDT based on the analysis of 25 metaphases per level in the human lymphocyte cultures. Liver cells from rabbit fetuses whose mothers had been treated with DDT during pregnancy showed no difference as to chromosome damage when compared to non-treated controls.

Lessa, et al. (1976) exposed human lymphocytes in vitro to very low concentrations of technical DDT ranging from 0.06 to 0.20 µg/ml and from 1 to 15 µg/ml. The lowest concentrations (0.06 to 0.20 µg/ml) are similar to those found in the plasma of individuals of the general population in Brazil. No correlation was found between DDT dose and cells with chromosomal aberrations. At 0.20, 4.05, and 8.72 µg/ml the proportion of cells with structural aberrations was significantly greater than in controls. It is interesting to note, though, that higher concentrations of approximately 12 and 15 ppm produced no such effect. Such effects may be caused by precipitation of DDT in the culture medium or may reflect a difference in the amount of binding of DDT and metabolites to the lipid moiety in the serum, or even differences in cell permeability.

Yoder, et al. (1973) reported an increase in chromatid lesions in blood cultures from a group of 42 men occupationally exposed to several pesticides, DDT included, during the spraying season, as compared with cultures made six months before when the same individuals had not been in contact with the pesticides for 30 days.

Rabello, et al. (1975) compared the frequency of cells with chromosomal aberrations in workers from three DDT plants, directly and indirectly exposed to DDT. There was no significant difference between these two groups. The total DDT and DDE levels in the plasma were determined. In the 25 workers in direct contact with DDT, the levels ranged from 0.16 µg/ml to 3.25 µg/ml (mean 1.03 µg/ml ± 0.79) total DDT and 0.03 to 1.77 µg/ml (mean 0.48 ± 0.52) p,p'-DDE. In these 25 individuals not in direct contact with the compound, values ranged from 0.03 to 1.46 µg/ml (mean 0.38 µg/ml ± 0.15) total DDT and 0.01 to 0.41 µg/ml (mean 0.15 ± 0.02) p,p'-DDE. In one of the plants, though, not being in direct contact with DDT did not prevent the workers from having DDT plasma levels as high as those in workers who actually manipulated the substance. A second comparison was then made between the groups with high and low DDT plasma concentrations, which showed an increase in cells with chromatid aberrations in the highly exposed group.

When another group of eight plant workers with total DDT plasma levels ranging from 0.09 to 0.54 µg/ml (mean 0.24 µg/ml + 0.15) and DDE levels ranging from 0.02 to 0.09 µg/ml (mean 0.041 + 0.02) was compared to 10 individuals of the general population with no detectable o,p'- or p,p'-DDT and DDE levels ranging from 0.02 to 0.04 µg/ml (mean 0.029 µg/ml + 0.01), no significant difference was found in the cytogenetic analysis. A positive correlation was found between DDT levels and length of exposure of all individuals, but there was no correlation between DDT levels in the plasma and frequency of cells having any type of chromosomal aberrations (numerical or structural).

No effect on unscheduled DNA synthesis was seen in SV_{40} transformed human cells with concentrations up to 1,000 µM DDT either with or without S-9 microsomal metabolic activation (Ahmed, et al. 1977).

In summary, the evidence in prokaryotic and fungal systems indicates that DDT and its metabolites do not produce point mutations. Although the evidence is somewhat contradictory in the dominant lethal studies, in vivo and in vitro cytogenetic studies seem to indicate that DDT is a clastogenic (chromosome breaking) substance.

Carcinogenicity

Fitzhugh and Nelson (1947) were the first to investigate the carcinogenic potential by chronic feeding of DDT in rodents. Osborne-Mendel weanling rats were fed diets containing 0, 10, 20, 40, and 80 mg/kg/day technical DDT for a period of two years. Pathologic examination revealed that the chief lesion was a moderate degree of liver damage, which consisted of hypertrophy of centrolobular hepatic cells, hyalinization of the cytoplasm and focal necrosis. Although no information as to dosage or sex of the tumor-bearing animals was given, the authors concluded that definite but minimal hepatic tumor formation was evident. This conclusion was based on comparison to many hundreds of similar aged rats which spontaneously showed distinct hepatic tumors at a frequency of one percent. By contrast, of the 75 rats surviving to 18 months, 15 exhibited either large adenomas or nodular ademonatous hyperplasia with similar microscopic morphologies, differing chiefly in size. Chronic feeding produced degenerative changes in the liver

at all doses. Acute admininstration of 1,000 mg/kg in the diet for 12 weeks produced the characteristic pathology which persisted for 2 weeks and reverted to a normal appearance when examined at 4, 6, 8, and 10 weeks post exposure.

Laug, et al. (1950) followed this study by administering lower doses of technical DDT in the diet for periods of 15 to 27 weeks to weanling rats. No hepatic cell alterations were noted in the controls and 1 ppm levels, with minimal effects at 5 ppm. At doses of 10 and 50 ppm, definite hepatic hypertrophy was observed, but gross alterations such as necrosis were not present. Ortega, et al. (1956) confirmed that liver alterations can be observed in rats with DDT levels as low as 5 ppm. However, this pathology was reversed to normal once the administration of the compound was stopped.

The next major report on the carcinogenicity of DDT was the work of Tarjan and Kemeny (1969) with BALB/C mice. Six generations of mice were fed either the control diet, contaminated with 0.2 to 0.4 mg/kg DDT, or the test diet of 2.8 to 3.0 mg/kg p,p'-DDT. The control group was comprised of 406 mice and the test group had 683 mice with a daily intake of 0.4 to 0.7 mg/kg. A striking increase in the incidence of leukemias was seen for the diet supplemented with pure DDT beginning at the F_3 generation. Myeloid, lymphoid, and aleukemias were found in 85 treated animals (12.4 percent) but only the latter two types were found in 10 controls (2.5 percent). In the F_4 and F_5 generations, myeloid leukemias accounted for one-third of the total malignancies. The authors further noted that in BALB/C mice spontaneous leukemia is unknown. The induction of

tumors in the experimental group was significant in the F_2 generation and increased almost logarithmically in successive generations from F_3. A total of 196 animals (28.7 percent) versus 13 (3.2 percent) were found to have tumors in the exposed and control series, respectively. The predominant tumor type was pulmonary carcinoma (116/196 animals), and the authors claim that prior observation of their colony shows incidence of malignant pulmonary tumors to be below 0.1 percent. A variety of tumors was observed widely dispersed throughout the body and included malignant vascular tumors (22/196) and reticulosarcomas (27/196) of the liver, kidney, spleen, ovary, and other organs. The authors noted that these positive findings were somewhat complicated by the fact that fetal exposure via placental passage and newborn intake through breast milk may heighten adverse effects.

In a survey of 120 selected pesticides and industrial chemicals to determine their potential carcinogenicity, five pesticides, p,p'-DDT included, were among the 11 compounds that showed significant increases in tumor incidence (Innes, et al. 1969). Two hybrid strains of mice were bred by crossing C-57BL/6 with either C3H/Amf or AKR strains; F_1 generations were designated strains X and Y, respectively. From day 7 to 28, the animals were treated by gavage, at the maximum tolerated dose of 46.4 mg/kg in a 0.5 percent gelatin suspension. From 4 weeks to 18 months, the chemical was mixed directly in the diet to approximate this dose; the concentration of DDT was calculated to be 21 mg/kg/day. The frequency of mice with hepatomas in both strains as compared to controls is

given in Table 8. Pulmonary tumors and lymphomas occurred in lower frequencies but are not presented in the table.

The pattern of tumor type among several experimental compounds was similar to the positive carcinogenic control compounds with the major evidence for tumorigenicity arising from the increased incidence of hepatomas. These increases were significant at the 0.01 level for the sum of both sexes and both strains, the sum of males of both strains, and for the males of each separate strain of the hybrids. Although incidence of lung and lymphatic tumors showed fewer increases than hepatoma, the incidence of lymphomas was significantly above negative controls for p,p'-DDT. The pulmonary tumors consisted primarily of adenomas.

In 1967, the International Agency for Research on Cancer (IARC) initiated a large investigation on the potential carcinogenicity of DDT in rodents. Studies were conducted in three different strains of mice in Lyon, France, by Tomatis, et al. (1972) (CF_1); in Moscow (USSR) by Shabad, et al. (1973) (strain A); and by Terracini, et al. (1973) in Milan (Italy) with BALB/C. In addition, a study was performed on white rats in Leningrad (USSR) (Turusou, et al. 1973). Although the rat study was negative, the long-term administration of DDT to mice induced a significant increase in the frequency of liver tumors, which constituted the strongest evidence to date for the possible tumorigenicity of DDT. Tomatis, et al. (1972) and Turusov, et al. (1973) fed six consecutive generations of CF_1 mice technical DDT in the diet, at doses of 0.3, 1.5, 7.5, and 37.5 mg/kg/day over the lifespan. CF_1 mice are characterized by a rather high incidence of spontaneous tumors mainly of the lung,

TABLE 8

Frequency of Animals with Hepatomas in Two Hybrid Strains of Mice Exposed to 21.0 mg/kg/day p,p'-DDT and to a Control Diet Without DDT*

Strain	Group	Total Number of Animals		Number of Animals with Hepatomas	
		M	F	M	F
C57 BL/6 x C3H/AmF	Exposed	18	18	11	5
	Control	79	87	22	8
C57 BL/6 x AKR	Exposed	18		7	0
	Control	90	82	5	1

*Source: Innes, et al. 1969

haematopoietic system, bone, and, in males, hepatomas. The percentage of animals bearing tumors of all types in DDT treated males (89 to 94 percent) was somewhat higher than in the male controls (78 percent). The DDT treated females had similar incidence (85 to 90 percent) to that of the female controls (89 percent). Only liver tumor incidence was clearly affected by DDT treatment. DDT treated male mice showed increases in liver hepatoma at all treatment levels, with the peak at 37.5 mg/kg/day (301/350) and similar incidence of 179/354, 181/362, and 214/383 (50 percent to 56 percent) for the three lower doses. Control males by contrast had 30 percent liver tumor frequency (97/328). In the females, no effect was seen at 0.3 and 3.0 mg/kg/day, but at the higher dose levels, tumor rates were significantly increased at 7.5 mg/kg/day (43/328) and 37.5 mg/kg/day (192/293). Liver tumors appeared earlier in the F_1 through F_5 generations than in the parental at higher dosages, but tumor incidence did not show consistent increases with consecutive generations as previously reported in BALB/C mice (Tarjan and Kemeny, 1969).

Comparable lifetime studies were performed by Shabad, et al. (1973) in A-strain mice. Technical DDT was given via gavage in daily dosages of 1.5 and 7.5 mg/kg/day for the parent lifetime and 10 mg/kg/day for consecutive generations, F_1 through F_5. Dosing with DDT in 0.1 ml sunflower oil began at 6 to 8 weeks of age for each generation. Strain A, which is susceptible to spontaneous lung adenomas, had an overall incidence of 7 percent in the control group. The parental generation, which received the highest dose, showed 37 percent incidence of lung adenomas. The frequencies of

lung tumor formation in parents and generations up to F_5 treated at 1.5 mg/kg/day were 19, 15, 24, 46, 43, and 13 percent, respectively. Animals dying prior to six months in all of the control, parental and F_1 treated groups showed no tumors, whereas earlier appearance of tumors in treated F_2 to F_5 was seen in animals dying prior to six months. No other tumors, including liver tumors, were detected.

A third multigeneration study on mice was performed by Terracini, et al. (1973). Three dose levels of technical DDT in the diet corresponding to 0.3, 3.0, and 37.5 mg/kg/day of DDT was administered to two separate colonies of BALB/C mice, beginning at 4 to 5 weeks of age, for their lifespan. The liver was the only target organ to show significant increases in the proportion of animals bearing tumors. Both males and females showed higher percentages of tumors at the 37.5 mg/kg/day level, with no excess tumorigenicity at 0.3 and 3.0 mg/kg/day. Liver tumors were present in 28/63 of the female parents and 43/58 of the first generation females, at the high dose only. Both colonies of mice showed identical results at this dosage. Incidence of malignant lymphomas was approximately 50 percent in the control, 0.3 or 3.0 mg/kg/day treated mice. At highest dosages, this incidence fell to 14 percent in one colony and 36 percent in the other. The incidence of lung adenomas was not affected by DDT treatment.

In order to determine if the liver tumors of mice would progress or regress after cessation of dosing, Tomatis, et al. (1974) treated CF_1 mice with dietary DDT of 37.5 mg/kg/day for 15 or 30 weeks. Autopsies were performed at 65, 95, and 120 weeks from the beginning of the experiment. The data indicated that a limited

period of exposure to 37.5 mg/kg/day results in an increased and early appearance of hepatomas, similar to that caused by lifespan exposure. The shorter the period of exposure, the lower the incidence of liver tumors. In males treated for 15 weeks and killed at 65, 95, and 120 weeks, the incidence of hepatomas was 13/60, 25/60, and 25/60, respectively. In males treated for 30 weeks the corresponding values were 38/60, 41/60, and 37/60, whereas the values for the controls in the same periods were 12/70, 24/83, and 33/98. In females, the incidence of hepatomas increased from the 65th to the 120th week. Those treated for 15 weeks showed 3/60, 11/60, and 5/60 after 65, 90, and 120 weeks, respectively; the corresponding values for the 30-week treated mice were: 4/54, 11/65, and 11/54; control values were: 0/69, 0/72, and 1/90.

The size and multiplicity of the hepatomas were also correlated with the duration of exposure and time of autopsy. In this study, as in the mouse studies previously cited, the histology of the hepatomas rarely shows signs of metastases and local invasiveness.

Further confirmation of the tumorigenicity of DDT to mouse livers was reported by Walker, et al. (1972) and by Thorpe and Walker (1973) in CF_1 strains. Incidences of tumors increased from 13 percent in controls to 37 percent at 7.5 mg/kg/day and 53 percent at 15 mg/kg/day with slightly higher increases in females (control, 17 percent; 15 mg/kg/day, 76 percent). In the second study over 26 months, Thorpe and Walker (1973) reported that the control values for both males and females were approximately 23 percent and rose to 77 percent for males and 87 percent for females

when fed 15 mg/kg/day in the diet. In contrast to the considerable shortening of lifespan seen in all previous mouse studies, minimal reduction was observed in this study.

Lifespan studies of the effect of chronic exposure to the metabolites DDE and DDD at 37.5 mg/kg/day in the diet and a mixture of 18.75 mg/kg/day each have been reported (Tomatis, et al. 1974). DDE showed marked effects in female CF_1 mice on liver tumors increasing from 1 percent (1/90) to 98 percent (54/55) in control versus treated; male incidence rose from 34 (33/98) to 74 percent (39/53). DDD showed slight increases in males only, but lung adenomas were markedly increased in both sexes. Control values for lung adenomas were 54 and 41 percent for males and females, respectively. Treatment with DDD plus DDE or DDE only showed a decrease to approximately 15 percent of female mice with lung tumors. DDE reduced incidence in males to 36 percent, but continued treatment had no further effect. The combination of DDD and DDE increased hepatoma incidence in both sexes to approximately 75 percent.

Since the most significant evidence implicating DDT as a possible carcinogen to date has been the formation of hepatic tumors in the mouse, some criticism of the use of this model with high dosages has been expressed (Deichmann, 1972). The use of animals with high spontaneous rate of tumor formation confers an added sensitivity if increases are found following exposure. The use of animal models with none or low spontaneous tumor incidences may be more indicative of actual risk.

Breslow, et al. (1974) reviewed the multigeneration studies by the IARC group to determine associations between tumor types

following DDT exposure. A negative correlation was seen between lymphomas and lung, mammary, and ovarian tumors, possibly due to competing risk mortality of the diseases. Despite some spurious results caused by grouping of animals, or age specific tumor prevalence, significant associations remained. Positive association between lymphoma and bone tumor formation could be a reflection of viral factors. Viruses isolated from some tumors of CF_1 mice have produced tumors in neonate mice. Hepatoma formation was less affected by lymphoma mortality. Histological examination of liver tumors in the CF_1 mice showed that this hepatoblastoma is similar in morphological resemblance to human hepatoblastoma. These tumors were found in association with the ordinary type of hepatoma and isolated primarily from older animals. The hepatoblastoma proved to be more highly malignant than the hepatoma, with metastases occurring in 10 to 20 percent versus 1 to 2 percent for hepatomas. A progression from hyperplasia to neoplasia can occur spontaneously with age in mice. The phenomena of induction of hyperplasia could be attributable to age and spontaneous tumor formation or associated with early induction by DDT activity.

One other positive report on the possible carcinogenicity of DDT in other species should be noted. Halver, et al. (1962) have observed an increase in evidence of hepatomas in rainbow trout being raised for lake stock. Following determinations of toxicity in rodents, dose fractions or multiples of one-sixteenth, one-fourth, 1, 4, and 16 times were fed in a synthetic diet of caseine gelatin, minerals, etc. High doses of DDT, 2-AAF, carbon tetrachloride, and other substances exhibited toxic effects.

Histopathologically confirmed hepatomas appeared in the intermediate levels of DDT, DES, and DMN. In a parallel study of fatty extracts from commercial ratios fed to fish, fish developed tumors also histologically resembling mammalian hepatoma.

In contrast to the positive results found in the rat, mouse, and fish studies previously cited, a number of other studies have shown no significant increase in tumor formation following DDT exposure. Lifetime feeding studies with Syrian golden hamsters at 75 and 150 mg/kg/day DDT were conducted by Agthe, et al. (1970). No increases in tumor incidences were observed, although there was a slight decrease in survival in both males and females.

A number of negative studies have been reported for various rat strains. Cameron and Cheng (1951) gave daily doses of 0.36, 3.6, and 36 mg/kg in oil for up to 63 weeks. Of the characteristic lesions described by Fitzhugh and Nelson (1947) and Laug, et al. (1950), only two female rats showed the centrolobular necrosis, and no significant differences in the extent of the other pathological changes could be made between treated and untreated groups.

Two long-term feeding studies utilizing Osborne-Mendel rats have shown no significant tumorigenic response to three dosage levels of DDT. In the first (Radomski, et al. 1965), DDT was fed at 7.5 and 12 mg/kg/day in the diet for two years. At 7.5 mg/kg/day, a slight, but not significant increase in hepatic tumor was noted; at 12 mg/kg/day no liver tumors were noted, and no differences were found between control and treated rats in tumors of other sites. In addition, DDT was fed in a mixture with 12 mg/kg/day each of

aramite, methoxychlor, and thiourea for two years, and no additive or synergistic effect for tumor formation was found.

In a similar fashion, Deichmann, et al. (1967) repeated these studies with a higher dosage of DDT - approximately 10 mg/kg/day for 27 months (200 ppm in the diet). Despite the fact that the treated animals displayed increased liver weights and the characteristic liver pathology, actual tumor incidence in DDT-fed rats was less than in the control. The majority of tumors were mammary tumors in both control and treated animals. Liver tumors were found only in rats fed DDT, aramite, or a mixture of these plus methoxychlor and thiourea. Mixtures of these tumorigens also had no significant effect in tumor incidence.

In order to determine the effect of diet and DDT on the development of leukemia, Kimbrough, et al. (1964) fed rats purified high fat, purified normal fat, and normal diets with and without DDT, for varying time periods. Of the seven animals developing leukemia, four were on the high fat diet, two were on purified high fat and 35 mg/day pp'-DDT, and one was on normal fat diet and DDT. No animals fed DDT and normal ratios developed leukemias. The authors concluded that leukemic development in Sherman rats was a consequence of diet and unrelated to DDT treatment.

Weisburger and Weisburger (1968) fed weanling Fisher rats 10 mg DDT/day (30-100 mg/kg/day) by gavage and found no liver tumors nor evident hepatotoxicity. In combination with 0.1 mg/day 2-AAF, hepatoma incidence increased from 67 to 90 percent in males and 7 to 33 percent in females compared to treatment with 2-AAF alone.

Rossi, et al. (1977) were able to induce noninvasive nodular liver tumors in Wistar rats by administering in their diet approximately 35 mg/kg/day of either technical DDT or sodium phenobarbital. None of the tumors were metastatic, and extrahepatic tumors were slightly higher in controls than in treated animals. For DDT, liver tumor incidences of 45 percent (24 of 53 animals) were observed in treated rats while controls exhibited no liver tumors. Interestingly, sodium phenobarbital at the same dosage level showed a similar hisopathologic liver change in 44 percent (22/50) of the rats. A compilation of long-term tumorigenicity studies in rats is given in Table 9.

In a recently published report of the National Cancer Institute (NCI, 1978), bioassays of DDT, DDD, and DDE were conducted in male and female Osborne-Mendel rats and $B6C3F_1$ mice by long-term feeding. Approximately 50 animals of each sex were treated and 20 animals of each sex served as controls. The dosing period consisted of 78 weeks in which there were dosage changes during the course of the study, and dosing was reported as time-weighted averages. High and low dietary concentrations of DDT were; 32.1 and 16.05 mg/kg/day for male rats, 21.0 and 10.5 for females; for DDD, males were fed 164.7 and 82.4 mg/kg/day and females 85.0 and 42.5 mg/kg/day. For DDE, males were fed 41.95 and 21.85 mg/kg/day and females 23.1 and 12.1 mg/kg/day. Increased mortality was seen in both sexes of rats dosed with DDE. No evidence of carcinogenicity was found for DDT or DDE in either sex at the given doses. DDD had no carcinogenic effects in the females, but in the males receiving a low dose, a significant increase in the follicular cell adenomas

TABLE 9

Long Term Tumorigenicity Studies in Rats

Dose Range mg/kg/day	Route of administration	Strain	Duration	Results	Reference
5-40	In diet	Osborne-Mendel	2 years	Increase in liver tumors at unspecified close.	Fitzhugh and Nelson (1947)
0.36-36.0	In oil by gavage	Osborne-Mendel	63 weeks	No effect.	Cameron and Cheng (1951)
0.12-1.2	In diet	Carworth	2 years	No effect.	Treon and Cleveland (1955)
1-2	In diet	Sherman	Variable	No increase in leukemia incidence.	Kimbrough, et al. (1964)
7.5-12	In diet	Osborne-Mendel	2 years	12 mg/kg/day. No effect. Slight increase liver tumor incidence at 7.5 mg/kg/day.	Radomski, et al. (1965)
10	In diet	Osborne-Mendel	2.25 yrs	No effect.	Deichmann, et al. (1967)
30-100	In diet	Fischer	1 year	No effect.	Weisburger and Weisburger (1968)
35	In diet	Wistar	2.9 yrs	Liver tumors in 45% of animals.	Rossi, et al. (1977)
10-32	In diet	Osborne-Mendel	78 weeks	DDT and DDE - No significant tumor incidences DDD - Increased thyroid tumors.	NCI (1978)

and carcinomas of the thyroid was observed. Because of high variation of thyroid lesions in control male rats, these findings are considered only suggestive of a chemical related effect. Among dosed rats no significant increases in other neoplasms were seen as compared to controls. Administration of DDE did not result in significant incidences of liver tumors, but the compound was hepatotoxic, inducing centrolobular necrosis and fatty metamorphosis.

Time-weighted average high and low dietary concentrations of DDT for the mice were; 6.6 and 3.3 mg/kg/day for male mice, and 26.25 and 13.05 mg/kg/day for female mice; high and low average doses of DDD were 123.3 and 61.65 mg/kg/day for male and female mice; and average high and low doses of DDE were 39.15 mg/kg/day and 22.2 mg/kg/day for male and female mice. Significant positive associations between increased doses and greater mortality in female mice dosed with DDT and DDE were observed. Poor survival was seen in control and dosed male mice in the bioassays of DDT and DDE. The only neoplasms occurring in statistically significant increased incidence were hepatocellular carcinomas among groups receiving DDE. The incidences of these tumors in control low-dosed and high-dosed males were 0/19, 7/41 (17 percent), and 17/47 (36 percent), respectively. Corresponding figures for females were 0/19, 19/47 (40 percent), and 34/48 (71 percent).

The National Cancer Insitiute (NCI) study presented no evidence for the carcinogenicity of DDT in rats and mice, of DDD in female rats or mice of either sex, or of p,p'-DDE in rats although hepatotoxicity was evident. A possible carcinogenic effect of DDD in inducing follicular cell tumors of the thyroid of male rats was

suggested. DDE was carcinogenic in $B6C3F_1$ mice, causing hepatocellular carcinomas in both sexes (NCI, 1978).

Durham, et al. (1963) found no liver pathology in Rhesus monkeys fed 100 mg/kg/day or less for up to 7½ years. Monkeys dosed at 2,500 mg/kg/day had cytoplasmic inclusions and necrosis in the liver and brain pathology. These animals died in less than six months from DDT poisoning.

There is evidence that DDT is an inhibitor of tumor takes in transplant. Mice exposed to 5.5 mg/kg/day in the diet were subjected to experimental transplantation of an ependymona. Compared to controls, treated animals were less susceptible to tumor transplantation and had increased longevity upon implantation (Laws, 1971).

In summary, the evidence for carcinogenicity of DDT in laboratory animals has been demonstrated only for the mouse in the production of liver tumors. In several other species, such as the rat, monkey, and hamster, no tumorigenic effect for DDT has been shown at doses less than 50 mg/kg. At doses higher than that level, evidence is equivocal for the rat (Fitzhugh and Nelson, 1947; Radom ski, et al. 1965; Deichmann, et al. 1967; NCI, 1978).

The epidemiological studies in man cannot be considered conclusive in view of the small number of individuals studied. Ortelee (1958) reported on a group of 40 men with extensive and prolonged occupational exposure to DDT in manufacturing or formulating plants. An exposure rate was given to each individual based on observation on the job. The highest exposure rate was estimated to be absorbed doses of approximately 42 mg/man/day. With the

exception of minor skin irritations, physical, neurological, and laboratory findings were within normal ranges, and no correlation between DDT exposure and frequency and distribution of the few abnormalities were seen. Laws, et al. (1967) found no evidence of adverse health effects in 35 men with 11 to 19 years of high occupational exposure (3.6 to 18 mg/man/day). No case of cancer was found.

Almeida, et al. (1975) have conducted a surveillance of workers exposed to DDT for six or more years as spray men in a malaria eradication campaign in Brazil. Although significant increases in DDT and DDE residues in the blood serum levels were observed, physical examination showed no significant increases in adverse health effects for the exposed versus control groups.

Edmundson, et al. (1969a) studied 154 individuals with occupational exposure to DDT and observed significant differences associated with race and type of occupation. Nonwhite formulators and agricultural sprayers showed greatly elevated serum concentrations, but during the 2-year time of study no clinical effects related to DDT exposure were observed.

Hayes, et al. (1971) administered doses up to 35 mg/man/day to volunteers for 21.5 months. Liver function studies of SGOT, plasma cholinesterase, and BSP retention exhibited no significant change from normal for these volunteers. A number of other health parameters were studied and no definite chemical or laboratory evidence of injury by DDT was found at the prevailing levels of intake. This led the authors to conclude that DDT had a considerable degree of safety for the general population.

Several authors have examined the storage of DDT in persons with various diseases. Maier-Bode (1960) found no differences in storage of DDT or DDE in 21 persons who died of cancer and 39 others who died of other diseases.

The difficulty in making these kinds of associations is illustrated by the results of Radomski, et al. (1968). Pesticide concentrations in fat and liver were determined at autopsy for 271 patients previously exhibiting various pathology of liver, brain, and other tissues. Another group that previously had infectious diseases was examined. High significant elevations of DDT and DDE were found in carcinomas of varying tissues. Fat concentrations of DDE, DDT, DDD, and dieldrin were consistently elevated in cases of hypertension. These observations were clouded by the great individual variability of pesticide levels regardless of the disease category.

Two further studies (Hoffman, et al. 1967; Casarett, et al. 1968) have been conducted on the levels of DDT in tissues of patients with cancer and other chronic diseases. One showed higher DDT residues in cancer patients (Casarett, et al. 1968). No conclusions can be made from these studies as to a possible causal relationship.

Sanchez-Medal, et al. (1963) noted 20 cases of aplastic anemia over an 8-year period in a Mexico City Hospital. In 16 out of 20 cases, the patients had repeated contact with pesticides during the prior six months. Insecticides implicated were DDT alone or DDT in association with lindane, dieldrin, or DDVP. One 13-year-old boy had been exposed repeatedly to DDT alone for two years and exposure

was intensified to every other day in the prior four months. He was accidentally exposed to 10 percent DDT spray in the hospital and died 30 hours later due to a worsening blood discrasia. The American Medical Association Registry on Blood Discrasia reported 44 cases of aplastic anemia associated with pesticide exposure through 1963. Of these cases, 19 were related to DDT, and in three, DDT was the sole agent (Erslev, 1964).

At the present time, no evidence of neoplasia has been found in the studies performed in occupationally exposed or dosed volunteer subjects. Medical histories have been essentially normal. However, these studies do not constitute an adequate basis to make conclusions regarding human carcinogenicity because of small sample size and short duration in terms of average human life span.

CRITERION FORMULATION

Existing Guidelines and Standards

In 1958, the U.S. Department of Agriculture (USDA) began to phase out the use of DDT in insect control programs. Spraying was reduced from 4.9 million acres in 1957 to just over 100,000 acres in 1967, and DDT was used as a persistent pesticide thereafter only in the absence of an effective alternative. In 1964, the Secretary of Interior issued a directive that use of chlorinated hydrocarbons should be avoided in interior lands. This was extended in 1970, when 16 pesticides, including DDT, were completely banned for use on Department of Interior lands. By 1969, DDT registration and usage was curtailed by the USDA in various areas of the cooperative Federal State pest control program. In November 1969, the USDA announced its intention to discontinue all uses of DDT nonessential to human health and for which there were safe and effective substitutes. In 1970, the USDA cancelled Federal registrations of DDT products for use on 50 food crops, domestic animals, finished wood and lumber products, and use around commercial, institutional, and industrial establishments.

Major responsibility for Federal regulation of pesticides under the Federal Insecticide, Fungicide, and Rodenticide Act (1947) was transferred to the U.S. EPA. In January, 1971, U.S. EPA issued notices of intent to cancel all remaining Federal registrations of products containing DDT. A hearing on the cancellation of Federal registration of products containing DDT was held beginning in August, 1971 and concluding in March, 1972. The principal parties to the hearing were 31 DDT formulating companies, the USDA,

the Environmental Defense Fund, and the U.S. EPA. This hearing and other evidence from four Government reports including the December 1969 Mrak Commission Report were instrumental in the final cancellation of all remaining crop usages of DDT in the U.S., effective December 31, 1972. During the same period (October 1972), a Federal Environmental Pesticide Control Act (FEPCA) was enacted which provided EPA with more effective pesticide regulation mechanisms. The cancellation order was appealed by the pesticides industry in several U.S. courts. On December 13, 1973, the U.S. Court of Appeals for the District of Columbia ruled there was substantial evidence in the record to support the U.S. EPA ban on DDT. In April 1973, the U.S. EPA, in accordance with authority granted by FEPCA, required that all products containing DDT be registered with the Agency by June 10, 1973. Since that time, the U.S. EPA has granted requests to the states of Washington and Idaho and to the Forest Service to use DDT on the basis of economic emergency and no effective alternative to DDT being available.

Authority to regulate hazards arising from the manufacturing and formulation of pesticides and other chemicals resides with the Occupational Safety and Health Administration (OSHA). Under the terms of the Occupational Safety and Health Act of 1970, the National Institute for Occupational Safety and Health (NIOSH) has been responsible for setting guidelines and criteria for occupational exposure. The OSHA exposure limit for DDT on skin has been set a 1.0 mg/m^2. Further, DDT has been classified as a suspected occupational carcinogen that should be cautiously handled in the workplace.

The decision to ban DDT was extensively reviewed relative to scientific and economic aspects in 1975 (U.S. EPA, 1975). No new evidence was found contradicting the original finding of the Administrator in 1972 (Table 10).

Current Levels of Exposure

Most of the reported DDT concentrations in air are associated with high usage of DDT prior to 1972. Stanley, et al. (1971) analyzed air samples from nine localities. DDT levels ranged from 0.1 ng/m^3 to 20 ng/m^3. Air samples collected in July 1970 over the Atlantic Ocean had 0.00007 ng/m^3 (Prospero and Seba, 1972). The actual levels of DDT in the ambient air at the present time are difficult to estimate but are probably at the lowest ranges of Stanley's estimates. The ambient air levels of DDT might be below levels that might add significantly to the total human intake (Spencer, 1975).

Kenaga (1972) gave the following relative values for residues for DDT and its metabolites found in various types of waters: rain water, 0.2 µg/l; fresh water, 0.02 µg/l; and sea water, 0.001 µg/l. Assuming average daily intake of water to be 2 liters in any given year, the maximal DDT intake from water would be 0.015 mg. This figure is approximately twice the estimated daily dietary intake of DDT for a 19-year-old male (U.S. EPA, 1975). Therefore, it is concluded that DDT intake from potable water does not contribute significantly to the overall exposure.

Duggan and Corneliussen (1972) calculated the average daily intake of total DDT residues in 1965 as 0.0009 mg/kg and decreasing to 0.0004 mg/kg in 1970. Market basket studies have shown significant

TABLE 10

History of DDT Standard or Recommendation

Year	Agency	Standard	Remarks
1971	WHO	0.005 mg/kg body weight	Maximum Acceptable Daily Intake in food
1976	U.S. EPA	0.001 µg/l	Quality Criteria for Water
1977	Natl. Acad. Sci., Natl. Res. Counc.	-	In light of carcinogenic risk projection, suggested strict criteria for DDT and DDE in drinking water
1978	Occup. Safety Health Admin. (NIOSH, 1978)	1 mg/m^2	Skin exposure
1978	U.S. EPA (40 FR 17116)	0.41 µg/l 0.00023 µg/l	Final acute and chronic values for water quality criteria for protection of aquatic life (fresh water)

declines between 1970 and 1973 of DDT and DDD residues of 86 and 89 percent, respectively. DDE decreased by 25 percent over this period of time. Dairy, meat, fish, and poultry constitute 95 percent of the total ingested DDT sources with dairy products contributing 30 percent of this amount. Average human fat storage for the time period of 1970 to 1973 has decreased from approximately 8 ppm to 6 ppm in the U.S. population. Based on these declines and the most current intake figures as of 1973, it is estimated that current levels of dietary intake are approximately 0.0001 mg/kg/day, with DDE comprising over 80 percent of this amount. Assuming the average male weighs 70 kg, the average daily intake would be 0.007 mg/day or 2.56 mg/year.

Human exposure to DDT is primarily by ingestion of contaminated food. Air and water intake is negligible and amounts to probably less than 0.01 mg/year. Therefore, by estimation, total intake of DDT per year for the average U.S. resident will be less than 3 mg/year.

Special Groups at Risk

The entire population of the U.S. has some low level exposure to dietary contaminants. Minimal exposure from air and water sources, however, may be more important in previously heavily sprayed agricultural areas, where large amounts of residues may still be present.

In 1975, estimated DDT production was 30 to 49 million pounds (NIOSH, 1978). Groups at special risk are workmen in manufacturing and formulating plants, applicators, handlers, and sprayers. During such times when exceptions are granted by the U.S. EPA for crop

usage or during use for public health measures, those involved in handling or applying DDT may have considerable exposure.

Estimating the number of individuals at high risk due to occupational exposure is difficult. It is estimated that 8,700 workers are involved in formulating or manufacturing all pesticides. Since DDT constitutes much less than 10 percent of the total, the maximal number of exposed workers would be approximately 500. Since usage of DDT is severely limited, persons exposed by application would probably be fewer.

Basis and Derivation of Criteria

Since no epidemiological evidence for the carcinogenicity of DDT in man has been reported, the results of animal carcinogenicity studies conducted by feeding DDT or its metabolites over the life span of the animal are regarded as the most pertinent data. Although a number of studies have been reported for various species, the major evidence for the tumorigenicity of DDT is its ability to induce liver tumors in mice.

Under the Consent Decree in NRDC v. Train, criteria are to state "recommended maximum permissible concentrations (including where appropriate, zero) consistent with the protection of aquatic organisms, human health, and recreational activities." DDT is suspected of being a human carcinogen. Because there is no recognized safe concentration for a human carcinogen, the recommended concentration of DDT in water for maximum protection of human health is zero.

Because attaining a zero concentration level may be infeasible in some cases and in order to assist the Agency and states in the

possible future development of water quality regulations, the concentrations of DDT corresponding to several incremental lifetime cancer risk levels have been estimated. A cancer risk level provides an estimate of the additional incidence of cancer that may be expected in an exposed population. A risk of 10^{-5} for example, indicates a probability of one additional case of cancer for every 100,000 people exposed, a risk of 10^{-6} indicates one additional case of cancer for every million people exposed, and so forth.

In the Federal Register notice of availability of draft ambient water quality criteria, EPA stated that it is considering setting criteria at an interim target risk level of 10^{-5}, 10^{-6} or 10^{-7} as shown in the following table.

Exposure Assumptions (per day)	Risk Levels and Corresponding Criteria(1)		
	10^{-7}	10^{-6}	10^{-5}
2 liters of drinking water and consumption of 6.5 grams of fish and shellfish (2)	0.0024 ng/l	0.024 ng/l	0.24 ng/l
Consumption of fish and shellfish only.	0.0024 ng/l	0.024 ng/l	0.24 ng/l

(1) Calculated by applying a linearized multistage model as discussed in the Human Health Methodology Appendices to the October 1980 Federal Register notice which announced the availability of this document to the animal bioassay data presented in Appendix I. Since the extrapolation model is linear at low doses, the additional lifetime risk is directly proportional to the water concentration. Therefore, water concentrations corresponding to other risk levels can be derived by multiplying or dividing one of the risk levels and corresponding water

concentrations shown in the table by factors such as 10, 100, 1,000, and so forth.

(2) Greater than 99 percent of the DDT exposure results from the consumption of aquatic organisms which exhibit an average bioconcentration potential of 53,600-fold. The remaining less than one percent of DDT exposure results from drinking water.

Concentration levels were derived assuming a lifetime exposure to various amounts of DDT (1) occurring from the consumption of both drinking water and aquatic life grown in water containing the corresponding DDT concentrations, and (2) occurring solely from the consumption of aquatic life grown in the waters containing the corresponding DDT concentrations. Although total exposure information for DDT is discussed and an estimate of the contributions from other sources of exposure can be made, this data will not be factored into the ambient water quality criteria formulation because of the tenuous estimates. The criteria presented, therefore, assume an incremental risk from ambient water exposure only.

The case of DDT and its possible role as a human carcinogen is complicated by several factors. Despite widespread use and exposure over 30 years, no positive associations with human cancer have been found to date, although the number of individuals studied is not statistically large. It is a chemical with high efficacy and has been extremely effective all over the world for public health measures. However, its slow biodegradability and propensity to accumulate in nontarget species have made it particularly hazardous for many fish and bird species. For mammals, however, it has a low acute toxicity as compared to other alternate pesticides.

DDT has not been shown to produce point mutations or teratogenic effects in a wide battery of tests. Some evidence for its clastogenic properties, however, make it suspect. The primary evidence for the carcinogenicity of DDT and metabolites to date has been the induction of liver tumors in mice. Studies in other species have shown negative or inconsistent effects. The evidence for the carcinogenicity of DDT would be much more convincing if tumorigenicity in other species or at other sites could be conclusively demonstrated. This is in light of the fact that DDT has been probably the most extensively studied compound in modern science.

An alternative level based on toxicity data was calculated for comparison as suggested in public comments. The Effects Section of this document discusses several adequate chronic bioassays on which to base this derivation. The Laug, et al. (1950) study was chosen because: (1) male rats appear to be the most sensitive animals to DDT exposure; and (2) the study was of sufficient legnth to observe toxic effects (approximately 27 weeks); and three, several doses were administered in the diet over the range of the dose-response curve. The highest no-observable-adverse-effect level (NOAEL) in this study was 1 ppm. An ADI can be determined for man from this dose by the following calculations:

$$\frac{1 \text{ mg/kg of diet (1 ppm)} \times 0.05}{0.350 \text{ kg}} = 0.143 \text{ mg/kg/d},$$

where 1 mg/kg is the highest NOAEL, 0.05 is the fraction of body weight that a rat is assumed to eat of diet per day, and 0.350 kg is the assumed weight of a rat.

$$\text{ADI} = \frac{0.143 \text{ mg/kg/d} \times 70 \text{ kg}}{10} = 1.0 \text{ mg/d},$$

where 70 kg is the average body weight of man and 10 represents an uncertainty factor used because of the available data on human exposure and other adequate chronic animal bioassays, as per National Academy of Sciences guidelines (NAS, 1977).

The ambient water quality concentration for DDT corresponding to this ADI is:

$$\text{Concentration} = \frac{\text{mg/d}}{(2\ \text{l/d} + 0.0065\ \text{kg/d} \times 53{,}600\ \text{l/kg})} = 2.85\ \mu\text{g/l}.$$

Current levels of exposure would seem to pose extremely small risk to persons in the U.S. In addition, DDT and DDE are preferentially stored in fatty compartments that are not actively dividing, suggesting less carcinogenic risk. However, the use of DDT has been restricted in several countries because of its impact on the environment and its tumorigenic effect in mice. This seems to be reasonable based on numerous reports.

Therefore, the Agency recommends that the criterion for DDT to be derived from the carcinogenic response in mice in the Tarjan and Kemeny (1969) study. The criterion associated with a human lifetime cancer risk of 10^{-5} is 0.24 ng/l.

REFERENCES

Agthe, C., et al. 1970. Study of the potential carcinogenicity of DDT in the Syrian golden hamster. Proc. Soc. Exp. Biol. Med. 134: 113.

Ahmed, F.E., et al. 1977. Pesticide induced damage and its repair in cultured human cells. Mutat. Res. 42: 161.

Almeida, W.F., et al. 1975. DDT residues in human blood serum in Brazil. Environ. Qual. Safety, Suppl. III: 586.

Anderson, D.W., et al. 1975. Brown pelicans: Improved reproduction off the southern California coast. Science. 190: 806.

Arthur, R.D., et al. 1976. Atmospheric levels of pesticides in the Mississippi Delta. Bull. Environ. Contam. Toxicol. 15: 129.

Barber, R.T. and S.M. Warlen. 1979. Organochlorine insecticide residues in deep sea fish from 2,500 m in the Atlantic Ocean. Environ. Sci. Technol. 13: 1146.

Bevenue, A. 1976. The "bioconcentration" aspects of DDT in the environment. Res. Rev. 61: 37.

Bidleman, T.F. 1979. Personal communication, Univ. of South Carolina.

Bidleman, T.F. and E.J. Christensen. 1980. Atmospheric removal processes for high molecular weight organochlorines. Jour. Geophys. Res. (In press)

Bidleman, T.F. and C.E. Olney. 1974. Chlorinated hydrocarbons in the Sargasso Sea atmosphere and surface water. Science. 183: 516.

Bidleman, T.F., et al. 1976. High Molecular Weight Chlorinated Hydrocarbons in the Air and Sea: Rates and Mechanisms of Air/Sea Transfer. In: H.L. Windom and R.A. Duce (eds.), Marine Pollutant Transfer. D.C. Heath and Co., Lexington, Massachusetts. p. 323.

Bittman, J., et al. 1968. Estrogenic activity of o,p'-DDT in the mammalian uterus and avian oviduct. Science. 162: 371.

Breslow, N.E., et al. 1974. Associations between tumor types in a large-scale carcinogensis study of CF-1 mice. Jour. Natl. Cancer Inst. 52: 233.

Buselmaier, W., et al. 1972. Comparative investigations on the mutagenicity of pesticides in mammalian test sytems. Eur. Environ. Mutagen Soc. 2nd Annu. Meet., Ziukovy Castle.

Cameron, G.R. and K. Cheng. 1951. Failure of oral DDT to induce toxic changes in rats. Br. Med. Jour. 819.

Casarett, L.J., et al. 1968. Organochlorine pesticide residues in human tissue - Hawaii. Arch. Environ. Health. 17: 306.

Clark, J.M. 1974. Mutagenicity of DDT in mice, Drosophila melanogaster and Neurospora crssa. Aust. Jour. Biol. Sci. 27: 427.

Conney, A.H. 1967. Pharmacological implications of microsomal enzyme induction. Pharmacol. Rev. 19: 317.

Cope, O.B. 1971. Interactions between pesticides and wildlife. Ann. Rev. Entomol. 16: 325.

Dale, W.E., et al. 1963. Poisoning by DDT: Relation between clinical signs and concentration in rat brain. Science. 142: 1474.

Datta, P.R. and M.J. Nelson. 1968. Enhanced metabolism of methyprylon, meprobamate and chlordiazepoxide hydrochloride after chronic feeding of a low dietary level of DDT to male and female rats. Toxicol. Appl. Pharmacol. 13: 346.

Dawson, R. and J.P. Riley. 1977. Chlorine-containing pesticides and polychlorinated biphenyls in British coastal waters. Estuar. Coast. Mar. Sci. 4: 55.

Deichmann, W.B. 1972. The debate on DDT. Arch. Toxikol. 29: 1.

Deichmann, W.B., et al. 1967. Synergism among oral carcinogens. IV. The simultaneous feeding of four tumorigens to rats. Toxicol. Appl. Pharmacol. 11: 88.

Duggan, R.E. and P.E. Corneliussen. 1972. Dietary intake of pesticide chemicals in the United States (III), June 1968 - April 1970. Pestic. Monitor. Jour. 5: 331.

Durham, W.F., et al. 1963. The effect of various dietary levels of DDT on liver function, cell morphology and DDT storage in the Rhesus monkey. Arch. Int. Pharmacodyn. Ther. 141: 111.

Durham, W.F., et al. 1965a. DDA excretion levels. Arch. Environ. Health. 11: 76.

Durham, W.F., et al. 1965b. DDT and DDE content of complete prepared meals. Arch. Environ. Health. 11: 641.

Edmundson, W.F., et al. 1969a. Levels of DDT and DDE in blood and DDA in urine of pesticide formulators following a single intensive exposure. Ind. Med. 36: 55.

Edmundson, W.F., et al. 1969b. p,p'-DDT and p,p'-DDE in blood samples of occupationally exposed workers. Pub. Health Rep. 84: 53.

Edwards, C.A. 1966. Insecticide residues in soils. Res. Rev. 13: 83.

Epstein, S.S and H. Shafner. 1968. Chemical mutagens in the human environment. Nature. 219: 385.

Erslev, A.J. 1964. Drug-induced blood dyscrasias. I. Aplastic anemia. Jour. Am. Med. Assoc. 188: 531.

Fahrig, R. 1974. Comparative Mutagenicity Studies with Pesticides. In: R. Montesano and L. Tomatis (eds.), Chemical Carcinogenesis Essays, WHO. IARC Sci. Publ. No. 10. p. 161.

Fang, S.C., et al. 1977. Maternal transfer of ^{14}C-p,p'-DDT via placenta and milk and its metabolism in infant rats. Arch. Environ. Contam. Toxicol. 5: 427.

Federal Water Pollution Control Administration. 1968. Water quality criteria. U.S. Dep. Inter., Washington, D.C.

Feil, V.J., et al. 1973. Metabolism of o,p'-DDT in rats. Jour. Agric. Food Chem. 21: 1072.

Fitzhugh, O.G. and A.A. Nelson. 1947. The chronic oral toxicity of DDT (2,2-bis-p-chlorophenyl-1,1,1-trichloroethane). Jour. Pharmacol. 89: 18.

Fluck, E.R., et al. 1976. Evaluation of a DNA polymerase-deficient mutant of E. coli for the rapid detection of carcinogens. Chem. Biol. Inter. 15: 219.

Gaines, T.B. 1969. Acute toxicity of pesticides. Toxicol. Appl. Pharmacol. 14: 515.

Giam, C.S., et al. 1978. Phthalate ester plasticizers: A new class of marine pollutant. Science. 199: 419.

Giam, C.S., et al. 1980. Phthalate esters, polycholorinated biphenyl and DDT residues in the Gulf of Mexico atmosphere. Atmos. Environ. 14: 65.

Gingell, R. 1976. Metabolism of ^{14}C-DDT in the mouse and hamster. Xenobiotica. 6: 15.

Gingell, R. and L. Wallcave. 1976. Species differences in the acute toxicity and tissue distribution of DDT in mice and hamsters. Toxicol. Appl. Pharmacol. 28: 385.

Gunther, F.A. 1969. Current status of pesticide residue methodology. Ann. N.Y. Acad. Sci. 160: 72.

Halver, J.E., et al. 1962. Dietary carcinogens induce fish hepatoma. Fed. Proc. 21: 390.

Harris, S.G. and J.H. Highland. 1977. Birthright denied. Environ. Defense Fund, Washington, D.C.

Hart, M.M., et al. 1971. Prematurity and intrauterine growth retardation induced by DDT in the rabbit. Arch. Int. Pharmacodyn. Ther. 192: 286.

Hart, M.M., et al. 1972. Distribution and effects of DDT in the pregnant rabbit. Xenobiotica. 2: 567.

Harvey, G.R. and W.G. Steinhauer. 1974. Atmospheric transport of polychlorobiphenyls to the North Atlantic. Atmos. Environ. 8: 777.

Hayes, W.J., Jr. 1963. Clinical handbook on economic poisons. Emergency information for treating poisoning. U.S. Dep. Health Edu. Welfare, Atlanta, Georgia.

Hayes, W.J., Jr. 1966. Monitoring Food and People for Pesticide Content. In: Scientific Aspects of Pest Control. Natl. Acad. Sci./Natl. Resour. Counc., Washington, D.C.

Hayes, W.J., Jr., et al. 1965. Chlorinated hydrocarbon pesticides in the fat of people in New Orleans. Life Sci. 4: 1611.

Hayes, W.J., Jr., et al. 1971. Evidence of safety of long-term, high, oral doses of DDT for man. Arch. Environ. Health. 22: 119.

Hoffman, W.S., et al. 1967. Relation of pesticide concentrations in fat to pathological changes in tissues. Arch. Environ. Health. 15: 771.

Huang, J. 1972. DDT effects on human health. Jour. Environ. Health. 34: 501.

Innes, J.R.M., et al. 1969. Bioassay of pesticides and industrial chemicals for tumorigenicity in mice: a preliminary note. Jour. Natl. Cancer Inst. 42: 1101.

Jensen, J.A., et al. 1957. DDT metabolites in feces and bile of rats. Jour. Agric. Food Chem. 5: 919.

Johnson, B.T., et al. 1971. Biological magnification and degradation of DDT and aldrin by fresh water investigation. Jour. Fish. Res. Board Can. 28: 705.

Johnson, D.W. 1974. Decline of DDT residues in migratory songbirds. Science. 186: 841.

Johnson, G.A. and S.M. Jalal. 1973. DDT-induced chromosomal damage in mice. Jour. Hered. 64: 7.

Johnson, R.D. and B.B. Manske. 1977. Pesticide and other chemical residues in total diet samples. XI. Pestic. Monitor. Jour. 11: 116.

Kelly-Garvert, F. and M.S. Legator. 1973. Cytogenetic and mutagenic effects of DDT and DDE in a Chinese hamster cell line. Mutat. Res. 17: 223.

Kenaga, E.E. 1972. Factors Related to Bioconcentration of Pesticides. In: F. Matsumura, et al. (eds.), Environmental Toxicology of Pesticides. Academic Press, New York and London.

Kimbrough, R., et al. 1964. Nutritional factors, long-term DDT intake, and chloroleukemia in rats. Jour. Natl. Cancer Inst. 33: 215.

Klass, E.E. and A.A. Belisle. 1977. Organochlorine pesticide and polychlorinated biphenyl residues in selected fauna from a New Jersey salt marsh - 1967 vs. 1973. Pestic. Monit. Jour. 10: 149.

Kolmodin, B., et al. 1969. Effects of environmental factors on drug metabolism decreased plasma half-life of antipyrine in workers exposed to chlorinated hydrocarbon insecticides. Clin. Pharmacol. Ther. 10: 638.

Krause, W., et al. 1975. The effect of DDT on spermatogenesis of the juvenile rat. Bull. Environ. Contam. Toxicol. 14: 171.

Kraybill, H.F. 1969. Significance of pesticide residues in foods in relation to total environmental stress. Can. Med. Assoc. Jour. 100: 204.

Larsen, K.D. and S.M. Jalal. 1974. DDT-induced chromosome mutations in mice - further testing. Can. Jour. Genet. Cytol. 16: 491.

Laug, E.P., et al. 1950. Liver cell alteration and DDT storage in the fat of the rat induced by dietary levels of 1 to 50 ppm DDT. Jour. Pharmacol. Exp. Ther. 98: 268.

Laws, E.R. 1971. Evidence of antitumorigenic effects of DDT. Arch. Environ. Health. 23: 181.

Laws, E.R., et al. 1967. Men with intensive occupational exposure to DDT. Arch. Environ. Health. 15: 766.

Legator, M.S., et al. 1973. A colloborative study of in vivo cytogenetic analysis. I. Interpretation of slide preparations. Toxicol. Appl. Pharmacol. 24: 337.

Lessa, J.M.M., et al. 1976. Cytogenetic study of DDT on human lymphocytes in vitro. Mutat. Res. 40: 131.

Lichtenberg, J.J., et al. 1970. Pesticides in surface waters of the U.S. - A five year summary 1964-1968. Pestic. Monitor. Jour. 4: 71.

Mahr, U. and H.G. Miltenburger. 1976. The effect of insecticides on Chinese hamster cell cultures. Mutat. Res. 40: 107.

Maier-Bode, H. 1960. DDT in korperfett des menschen. Med. Exp. 1: 146.

Marshall, T.C., et al. 1976. Screening of pesticides for mutagenic potential using Salmonella typhimurium. Jour. Agric. Food Chem. 24: 560.

McCann, J., et al. 1975. Detection of carcinogens as mutagens in the Salmonella/microsome test: Assay of 300 chemicals. Proc. Natl. Acad. Sci. 72: 5135.

Menzie, C.M. 1972. Fate of pesticides in the environment. Ann. Rev. Entomol. 17: 199.

Morgan, D.P. and C.C. Roan. 1971. Absorption, storage, and metabolic conversion of ingested DDT and DDT metabolites in man. Arch. Environ. Health. 22: 301.

Morgan, D.P. and C.C. Roan. 1977. The metabolism of DDT in man. Essays Toxicol. 5: 39.

Mrak, E.M. 1969. Report of the Secretary's Commission of pesticides and their relationship to environmental health. U.S. Dep. Health Edu. Welfare, Washington, D.C.

Nash, R.G. and E.A. Woolson. 1967. Persistence of chlorinated hydrocarbon insecticides in soils. Science. 157: 924.

National Academy of Sciences. 1977. Drinking Water and Health. Washington, D.C.

National Cancer Institute. 1978. Bioassays of DDT, TDE, and p,p'-DDE for possible carcinogenicity. CAS No. 50-29-3, 72-54-8, 72-55-9, NCI-CG-TR-131. U.S. Dep. Health Edu. Welfare.

National Institute for Occupational Safety and Health. 1978. Criteria for a recommended standard. Occupational exposure during the manufacture and formulation of pesticides. U.S. Dep. Health Edu. Welfare.

Negherbon, W.O. 1959. Handbook of Toxicology. III. Saunders, Philadelphia and London.

Ortega, P., et al. 1956. DDT in the diet of the rat. Pub. Health Monogr. No. 43: 1.

Ortelee, M.F. 1958. Study of men with prolonged intensive occupational exposure to DDT. AMA Arch. Ind. Health. 18: 440.

Ottoboni, A. 1969. Effect of DDT on reproduction in the rat. Toxicol. Appl. Pharmacol. 14: 74.

Palmer, K.A., et al. 1972. Cytogenetic effects of DDT and derivatives of DDT in a cultured mammalian cell line. Toxicol. Appl. Pharmacol. 22: 355.

Palmer, K.A., et al. 1973. Dominant lethal study of p,p'-DDT in rats. Food Cosmet. Toxicol. 11: 53.

Peterson, J.E. and W.H. Robison. 1964. Metabolic products of p,p'-DDT in the rat. Toxicol. Appl. Pharmacol. 6: 321.

Pimentel, D. 1971. Ecological effects of pesticides on nontarget species. U.S. Gov. Printing Off., Washington, D.C. Cited in Bevenue, 1976. Res. Rev. 61: 37.

Prospero, J.M. and D.B. Seba. 1972. Some additional measurements of pesticides in the lower atmosphere of the northern equatorial Atlantic Ocean. Atmos. Environ. 6: 363.

Rabello, M.N., et al. 1975. Cytogenetic study on individuals occupationally exposed to DDT. Mutat. Res. 28: 449.

Radomski, J.L., et al. 1965. Synergism among oral carcinogens. I. Results of the simultaneous feeding of four tumorigens to rats. Toxicol. Appl. Pharmacol. 7: 652.

Radomski, J.L., et al. 1968. Pesticide concentrations in the liver, brain and adipose tissue of terminal hospital patients. Food Cosmet. Toxicol. 6: 209.

Reif, V.D. and J.E. Sinsheimer. 1975. Metabolism of 1-(o-chlorophenyl)-1-(p-chlorophenyl)-2,2-dichloroethane (o,p'DDD) in rats. Drug Metab. Disp. 15.

Reinert, R.E., et al. 1974. Effect of temperature on accumulation of methylmercuric chloride and F,F-DDT by rainbow trout (Salmo gairdneri). Jour. Fish Res. Board Can. 31: 1649.

Risebrough, R.W., et al. 1976. Transfer of Higher Molecular Weight Chlorinated Hydrocarbons to the Marine Environment. In: H.L. Windom and R.A. Duce (eds.), Marine Pollutant Transfer. D.C. Heath and Co., Lexington, Massachusetts. p. 261.

Roan, C., et al. 1971. Urinary excretion of DDA following ingestion of DDT and DDT metabolites in man. Arch. Environ. Health. 22: 309.

Rossi, L., et al. 1977. The long-term administration of DDT or phenobarbitol -- N.A. in Wistar Rats. Int. Jour Cancer. 19: 179.

Sanchez-Medal, L., et al. 1963. Insecticides and aplastic anemia. New Eng. Jour. Med. 269: 1365. Cited in Natl. Inst. Occup. Safety Health. 1978.

Scura, E.D. and V.E. McClure. 1975. Chlorinated hydrocarbons in seawater: Analytical method and levels in the northeast Pacific. Mar. Chem. 3: 337.

Shabad, L., et al. 1973. Transplacental and combined long-term effect of DDT in five generations of A-strain mice. Int. Jour. Cancer. 11: 688.

Shirasu, V., et al. 1976. Mutagenicity screening of pesticides in the microbial system. Mutat. Res. 40: 19.

Spencer, W.F. 1975. Movement of DDT and its derivatives into the atmosphere. Res. Rev. 59: 91.

Spitzer, P.R., et al. 1978. Productivity of ospreys in Connecticut-Long Island increases as DDE residues decline. Science. 202: 333.

Stanley, C.W., et al. 1971. Measurement of atmospheric levels of pesticides. Environ. Sci. Technol. 5: 430.

Stephan, C.E. 1980. Memorandum to J. Stara. U.S. EPA. July 3.

Tarjan, R. and T. Kemeny. 1969. Multigeneration studies on DDT in mice. Food Cosmet. Toxicol. 7: 215.

Terracini, B., et al. 1973. The effects of long-term feeding of DDT to BALB/C mice. Int. Jour. Cancer. 11: 747.

Thorpe, E. and A.I.T. Walker. 1973. The toxicology of dieldrin (HEOD). II. Comparative long-term oral toxicity studies in mice with dieldrin, DDT, phenobarbitone, β-BHC and γ-BHC. Food Cosmet. Toxicol. 11: 433.

Tomatis, L., et al. 1971. Storage levels of DDT metabolites in mouse tissues following long-term exposure to technical DDT. Tumori. 57: 377.

Tomatis, L., et al. 1972. The effect of long-term exposure to DDT on CF-1 mice. Int. Jour. Cancer. 10: 489.

Tomatis, L., et al. 1974. Effect of long-term exposure to 1,1-dichloro-2,2-bis(p-chlorophenyl)ethylene, to 1,1-dichloro-2,2-bis(p-chlorophenyl)ethane, and to the two chemicals combined on CF-1 mice. Jour. Natl. Cancer Inst. 52: 883.

Treon, J.F. and F.P. Cleveland. 1955. Pesticide toxicity: Toxicity of certain chlorinated hydrocarbon insecticides for laboratory animals with special reference to aldrin and dieldrin. Jour. Agric. Food Chem. 3: 402.

Turusov, V.S., et al. 1973. Tumors in CF-1 mice exposed for six consecutive generations to DDT. Jour. Natl. Cancer Inst. 51: 983.

U.S. EPA. 1975. DDT. A review of scientific and economic aspects of the decision to ban its use as a pesticide. EPA 520/1-75-022. Washington, D.C.

U.S. EPA. 1976. Organic compounds identified in drinking water in the U.S. Health Effects Res. Lab., Cincinnati, Ohio.

U.S. EPA. 1980. Seafood consumption data analysis. Stanford Research Institute International. Menlo Park, California. Final Report, Task 11. Contract No. 68-01-3887.

Vogel, E. 1972. Mutagenitatsuntersuchungen mit DDT und den DDT-metaboliten DDE, DDD, DDOM, und DDA an Drosphila melanogaster. Mutat. Res. 16: 157.

Walker, A.I.T., et al. 1972. The toxicology of dieldrin (HEOD). I. Long-term oral toxicity studies in mice. Food Cosmet. Toxicol. 11: 415.

Wallcave, L., et al. 1974. Excreted metabolites of 1,1,1-trichloro-2,2-bis(p-chlorophenyl)ethane in the mouse and hamster. Jour. Agric. Food Chem. 22: 904.

Ware, G.W. and E.E. Good. 1967. Effects of insecticides on reproduction in the laboratory mouse. II. Mirex, Telodrin, and DDT. Toxicol. Appl. Pharmacol. 10: 54.

Weisburger, J.H. and E.K. Weisburger. 1968. Food additives and chemical carcinogens: on the concept of zero tolerance. Food Cosmet. Toxicol. 6: 235.

Welch, R.M., et al. 1969. Estrogenic action of DDT and its analogs. Toxicol. Appl. Pharmacol. 14: 358.

Wessel, J.R. 1972. Pesticide residues in foods. Environmental contaminants in foods. Spec. rep. No. 9. N.Y. State Agric. Exp. Sta., Geneva.

Wolfe, H.R. and J.F. Armstrong. 1971. Exposure of formulating plant workers to DDT. Arch. Environ. Health. 23: 169.

Wolfe, H.R., et al. 1967. Exposure of workers to pesticides. Arch. Environ. Health. 14: 622.

Woodwell, G.M., et al. 1967. DDT residues in an East Coast estuary: A case of biological concentration of a persistent insecticide. Science. 156: 821.

Woodwell, G.M., et al. 1971. DDT in the biosphere: Where does it go? Science. 174: 1101.

World Health Organization. 1971. International Standards for Drinking Water. 3rd ed. Geneva.

Wrenn, T.F., et al. 1970. Test of estrogenicity in rats fed low level of o,p'-DDT. Bull. Environ. Contam. Toxicol. 5: 61.

Yoder, J.F., et al. 1973. Lymphocyte chromosome analysis of agricultural workers during extensive occupational exposure to pesticides. Mutat. Res. 21: 335.

APPENDIX I

Summary and Conclusions Regarding the Carcinogenicity of DDT*

DDT is a synthetic, chlorinated hydrocarbon insecticide which has broad-spectrum insecticidal activity. DDT residues have been detected in a wide variety of fruits, vegetables, meat, fish, and poultry, and will probably continue to be present in agricultural produce indefinitely as a consequence of the persistence of DDT in soil. DDT is absorbed completely after inhalation and ingestion and absorbed poorly through skin. DDT has not been found to be mutagenic in bacterial test systems, either with or without metabolic activation. The evidence from mammalian test systems *in vitro* and *in vivo* is inconclusive.

There is no epidemiological evidence relating to the carcinogenicity of DDT, but there are a number of carcinogenicity studies conducted by feeding DDT to animals. A number of chronic studies have been reported in various species, but the major evidences for tumorigenicity in mice and rats are described below. In mice, DDT increased tumor incidence significantly in experimental groups as compared to controls in liver (Innes, et al. 1969; Walker, et al. 1972; Turusov, et al. 1973; Terracini, et al. 1973; Thorpe and Walker, 1973), lungs (Tarjan and Kemeny, 1969; Shabad, et al. 1963) and lymphoreticular tissue tumors (Innes, et al. 1969; Tarjan and Kemeny, 1969). In rats, liver tumors were significantly increased in the experimental group as compared to controls in two studies (Fitzhugh and Nelson, 1947; Rossi, et al. 1977).

*This summary has been prepared and approved by the Carcinogens Assessment Group of EPA on June 20, 1980.

The negative NCI mouse study might be explained on the basis of shorter duration of exposure, low dose in male mice, and the use of a strain different from the other positive studies. The negative NCI rat study might be explained on the basis of shorter duration of exposure and lower dose compared to that used in the Fitzhugh study. There are other negative carcinogenicity studies in mice, rats, hamsters, dogs, and monkeys.

The water quality criterion for DDT is based on a six-generation study in CF_1 mice by Tarjan and Kemeny (1969). It is concluded that if water alone is consumed, the water concentration should be less than 42 ng/l in order to keep the lifetime cancer risk below 10^{-5}. If fish and water are consumed, the water concentration should be less than 0.24 ng/l to achieve the same risk level.

Summary of Pertinent for DDT

Of the five positive carcinogenicity studies with DDT, the one showing the most potent response is the male mice group in the Turusov study. This study, however, is not used for the water quality criteria because the dose response curve was flat down to the lowest dose tested, and the background rate of tumors was abnormally large.

Instead, the data of Tarjan and Kemeny (1969) was used. Five generations of mice were fed dietary DDT with an equivalent intake of 0.55 mg/kg/day. Tumors were found in excess of controls in each generation beyond the second. They were widely distributed in several sites and consisted of adenocarcinomas as well as several types of carcinomas. The parameters of the calculation are:

Dose (mg/kg/day)	Incidence (no. responding/no. tested)
0.0	13/406
0.55	196/683
le = 26 months[1]	w = 0.030 kg
Le = 26 months	R = 53,600 l/kg
L = 26 months	

With these parameters, the carcinogenic potency factor, q_1*, for humans is 8.422 $(mg/kg/day)^{-1}$. The result is that if fish and water are consumed the water concentration should be less than 0.24 ng/l in order to keep the individual lifetime risk below 10^{-5}. If only water were consumed, the corresponding concentration is 42 ng/l.

[1]There was some confusion in the original article over the length of DDT exposure. In a subsequent publication Tarjan clearly stated that DDT exposure was from weaning to death (Fd. Cosmet. Toxicol., August 1970, p. 478).