United States
Environmental Protection
Agency

Office of Air Quality
Planning and Standards
Research Triangle Park NC 27711

EPA-450/2-78-049b
December 1979

Air

EPA

Primary Aluminum: Guidelines for Control of Fluoride Emissions from Existing Primary Aluminum Plants

EPA-450/2-78-049b

Primary Aluminum: Guidelines for Control of Fluoride Emissions from Existing Primary Aluminum Plants

Emission Standards and Engineering Division

U.S. ENVIRONMENTAL PROTECTION AGENCY
Office of Air, Noise, and Radiation
Office of Air Quality Planning and Standards
Research Triangle Park, North Carolina 27711

December 1979

This report has been reviewed by the Emission Standards and Engineering Division of the Office of Air Quality Planning and Standards, EPA, and approved for publication. Mention of trade names or commercial products is not intended to constitute endorsement or recommendation for use. Copies of this report are available through the Library Services Office (MD-35), U.S. Environmental Protection Agency, Research Triangle Park, N.C. 27711, or from National Technical Information Services, 5285 Port Royal Road, Springfield, Virginia 22161.

Publication No. EPA-450/2-78-049b

TABLE OF CONTENTS

	Page
1. INTRODUCTION AND SUMMARY	1-1
1.1 INTRODUCTION	1-1
1.2 HEALTH AND WELFARE EFFECTS OF FLUORIDES	1-5
1.3 FLUORIDES AND THEIR CONTROL	1-6
1.3.1 Fluorides	1-6
1.3.2 Control of Fluorides: New Primary Aluminum Plants	1-7
1.3.3 Control of Fluorides: Existing Primary Aluminum Plants	1-9
1.4 EMISSION GUIDELINES	1-13
1.4.1 State Emission Guidelines	1-13
1.4.2 Performance of Recommended Emission Controls	1-17
1.4.3. Emission Testing	1-19
1.5 ASSESSMENTS	1-20
1.5.1 Economic	1-20
1.5.2 Environmental	1-24
1.5.3 Energy	1-24
1.6 COMPLIANCE TIMES	1-26
1.7 REFERENCES FOR SECTION 1	1-30
2. HEALTH AND WELFARE EFFECTS OF FLUORIDES	2-1
2.1 INTRODUCTION	2-1
2.2 EFFECT OF FLUORIDES ON HUMAN HEALTH	2-2
2.2.1 Atmospheric Fluorides	2-2
2.2.2 Ingested Fluorides	2-4
2.3 EFFECT OF FLUORIDES ON ANIMALS	2-4
2.4 EFFECT OF ATMOSPHERIC FLUORIDES ON VEGETATION	2-6

Page

2.5 THE EFFECT OF ATMOSPHERIC FLUORIDES ON BUILDING MATERIALS 2-7

2.5.1 Etching of Glass 2-7

2.5.2 Effect of Fluorides on Structures 2-7

2.6 RATIONALE 2-9

2.7 REFERENCES FOR SECTION 2 2-9

3. U.S. PRIMARY ALUMINUM MANUFACTURING STATISTICS 3-1

3.1 EXISTING PLANTS 3-1

3.1.1 Introduction 3-1

3.1.2 Location and Size 3-2

3.2 FUTURE TRENDS 3-8

3.2.1 Domestic Industry and Plant Growth 3-8

3.2.2 Plant Location and Cell type 3-13

3.2.3 New Producers and Technology 3-13

3.3 PRICE STATISTICS 3-16

3.4 REFERENCES FOR SECTION 3 3-17

4. PROCESS DESCRIPTION 4-1

4.1 PRIMARY ALUMINUM REDUCTION 4-1

4.2 PREBAKE PROCESS 4-10

4.2.1 Anode Bake Plant 4-10

4.2.2 Reduction Cells 4-14

4.3 SODERBERG CELLS 4-15

4.3.1 Vertical Stud Reduction Cells 4-16

4.3.2 Horizontal Stud Reduction Cells 4-18

4.4 REFERENCES FOR SECTION 4 4-19

	Page
5. FLUORIDE EMISSIONS	5-1
5.1 POINTS OF EMISSION	5-1
5.2 UNCONTROLLED EMISSIONS--SOURCE, CHARACTERISTICS, AND MINIMIZATION	5-9
5.2.1 Reduction Cells (All Types)	5-9
5.2.2 Anode Bake Plant	5-20
5.3 TYPICAL FLUORIDE EMISSIONS AND EXTENT OF CONTROL	5-22
5.3.1 Reduction Cells (All Types)	5-22
5.3.2 Anode Bake Plant	5-26
5.4 REFERENCES FOR SECTION 5	5-28
6. CONTROL TECHNIQUES FOR POTROOM AND ANODE BAKE PLANT FLUORIDES	6-1
6.1 POTROOM RETROFIT PRIMARY COLLECTION SYSTEMS	6-1
6.1.1 Cell Hooding	6-2
6.1.2 Calculation of Primary Collection Efficiency	6-11
6.1.3 Primary Exhaust Rates	6-19
6.1.4 Ducting Layouts	6-23
6.2 POTROOM AND ANODE BAKE PLANT RETROFIT REMOVAL EQUIPMENT AND ITS PERFORMANCE	6-29
6.2.1 Potroom Primary Dry Scrubbing	6-29
6.2.2 Potroom Primary and Anode Bake Plant Wet Scrubbing	6-34
6.2.3 Potroom Secondary Wet Scrubbing	6-39
6.2.4 Summary of Best Retrofit Performance	6-47
6.3 RETROFIT CASE DESCRIPTIONS	6-50
6.3.1 Plant A--HSS Cells--Primary Dry Scrubbing Retrofit	6-52
6.3.2 Plant B--HSS Cells--Primary Wet ESP Retrofit	6-76
6.3.3 Plant C--Prebake Cells--Primary Injected Alumina Dry Scrubbing Retrofit	6-100

Page

6.3.4 Case Description Summary 6-117

6.4 DESIGN, INSTALLATION AND STARTUP TIMES FOR RETROFIT CONTROLS 6-127

6.5 REFERENCES FOR SECTION 6 6-135

7. COSTS OF ALTERNATIVE FLUORIDE EMISSION CONTROLS 7-1

7.1 INTRODUCTION 7-1

7.2 SELECTION OF ALTERNATIVE CONTROL LEVELS 7-2

7.3 CAPITAL AND ANNUAL COSTS FOR FLUORIDE EMISSION CONTROL OPTIONS 7-11

7.3.1 Procedure 7-11

7.3.2 Capital Costs 7-11

7.3.3 Annualized Cost 7-14

7.3.4 Cost Effectiveness 7-16

7.4 REFERENCES FOR SECTION 7 7-23

8. RATIONALE OF STATE EMISSION GUIDELINES FOR EXISTING PRIMARY ALUMINUM PLANTS 8-1

8.1 INTRODUCTION 8-1

8.2 FLUORIDE EMISSION CONTROL EQUIPMENT AND COSTS 8-3

8.3 RECOMMENDED STATE GUIDELINES AND COLLECTION AND REMOVAL EFFICIENCIES OF CONTROL EQUIPMENT FOR FLUORIDE EMISSIONS 8-6

8.3.1 State Fluoride Emission Guidelines 8-9

8.3.2 Compliance Time 8-13

8.4 EMISSION TESTING 8-14

9. ENVIRONMENTAL ASSESSMENTS 9-1

9.1 AIR 9-3

9.1.1 National Fluoride Emissions from Primary Aluminum Reduction Cells 9-3

9.1.2 Fluoride Emission Control Systems with Extreme Air Pollution Impacts 9-6

		Page
9.1.3	Fluoride Dispersion	9-8
9.1.4	Particulate Emissions from Aluminum Reduction Cells	9-14
9.1.5	National Particulate and Fluoride Emissions from Anode Bake Plants	9-14
9.2	WATER	9-17
9.2.1	Effluent Limitations Guidelines for Primary Aluminum Plants	9-18
9.2.2	Water Pollution Control Technology Required to Meet 1983 Effluent Guidelines Standards	9-18
9.2.3	National Effluent Emissions from Primary Aluminum Reduction Plants	9-18
9.2.4	Fluoride Air Emission Control Schemes with Extreme Water Pollution Impacts	9-24
9.3	SOLID WASTE DISPOSAL	9-26
9.3.1	National Solid Waste Generation Due to Fluoride Control by the Primary Aluminum Industry	9-26
9.3.2	Fluoride Emissions Control Systems with Extreme Solid Waste Impacts	9-30
9.4	ENERGY	9-32
9.4.1	National Fluoride Emissions Control Energy Requirements for the Primary Aluminum Industry	9-34
9.4.2	Fluoride Emission Control Systems with Extreme Energy Impacts	9-37
9.5	OTHER ENVIRONMENTAL IMPACTS	9-37
9.6	OTHER ENVIRONMENTAL CONCERNS	9-39
9.6.1	Irreversible and Irretrievable Commitment of Resources	9-39
9.6.2	Environmental Assessment of Delayed Standards	9-42
9.6.3	Environmental Assessment of No Standards	9-42
9.7	REFERENCES FOR SECTION 9	9-45

LIST OF TABLES

Table		Page
1-1	Potroom Total Fluoride Emissions in U.S., 1975	1-8
1-2	Retrofit Emission Reductions and Costs for Ten Primary Aluminum Plants	1-10
1-3	Retrofit Controls for Eight Primary Aluminum Plants	1-11
1-4	State Guidelines for Control of Fluoride Emissions From Existing Primary Aluminum Plants	1-14
1-5	Fluoride Emission Ranges Corresponding to State Guidelines for Existing Primary Aluminum Plants	1-18
1-6	Primary Aluminum Control Strategies	1-23
1-7	Environmental Impact of Best Control for Total Fluoride Emissions from the Primary Aluminum Industry	1-25
1-8	Increments of Progress for Installation of Fluoride Emission Controls in an Existing Primary Aluminum Plant	1-27
1-9	Total Construction Time for Retrofit Emission Controls for Primary Aluminum Plants	1-28
2-1	Examples of HF Concentrations (ppb) and Exposure Durations Reported to Cause Leaf Damage and Potential Reduction in Crop Values	2-8
3-1	U.S. Primary Aluminum Plants and Capacities, 1974	3-3
3-2	Distribution of Plants by Population, 1971	3-8
3-3	Estimated Distribution of Plants by Environment	3-9

Table		Page
3-4	Production of Primary Aluminum in the United States	3-10
3-5	Growth in Primary Aluminum Plant Average Capacity in U.S.	3-12
3-6	U.S. Trends in Adoption of Cell Types	3-14
3-7	Primary Aluminum Ingot Price History	3-17
5-1	Experimental Effect of Three Operating Variables on Fluoride Generation	5-15
5-2	Potroom Total Fluoride Emissions in U.S., 1975	5-24
5-3	Extent of Potroom Control, 1975	5-25
5-4	Ring Furnace Fluoride Emissions in U.S., 1970	5-27
6-1	Primary Collection Efficiency Versus Exposed Annular Area for Two VSS Plants	6-10
6-2	Calculation of Primary Collection Efficiency for One Swiss-Design SWPB Plant	6-12
6-3	Calculation of Primary Collection Efficiency for One French-Design SWPB Plant--Retrofit Case Description C	6-14
6-4	Calculation of Primary Collection Efficiency for Typical American-Design CWPB Plants	6-16
6-5	Calculation of Primary Collection Efficiency for One HSS Plant--Retrofit Case Description A	6-17
6-6	Estimate of Primary Collection Efficiency for Typical VSS Plants	6-20
6-7	Primary Collection Efficiency Versus Standard Cubic Foot per Ton of Aluminum Produced for Seven Primary Aluminum Plants	6-22
6-8	Gas Volumes and Control Device Module Sizes for Economic Impact Analysis	6-27
6-9	Capital Cost Comparison Between Courtyard and Central Primary Collection Systems	6-28

Table		Page
6-10	Performance of Spray Screen Secondary Scrubbers at Six Existing Primary Aluminum Plants	6-44
6-11	Performance of Best Retrofit Emission Controls for Primary Aluminum Potrooms	6-48
6-12	Summary of Anode Bake Plant Best Retrofit Performance	6-49
6-13	Major Retrofit Items--Plant A--Lines 1 and 2	6-57
6-14	Major Retrofit Items--Plant A--Line 4	6-65
6-15	Before Retrofit Emissions--Plant A--Lines 1, 2, and 4	6-67
6-16	After Retrofit Emission Estimates--Plant A--Lines 1, 2, and 4	6-67
6-17	Retrofit Capital Cost Estimate--Plant A--Lines 1, 2, and 4	6-71
6-18	Retrofit Annual Operating Cost Estimate--Plant A--Lines 1, 2, and 4	6-74
6-19	Major Retrofit Items--Plant B--South Plant	6-80
6-20	Major Retrofit Items--Plant B--North Plant	6-85
6-21	Before Retrofit Maximum Emissions--Plant B--North and South Plants	6-87
6-22	After Retrofit Maximum Emission Estimates--Plant B--North and South Plants	6-87
6-23	After Retrofit Average Emission Estimates--Plant B--North and South Plants	6-90
6-24	Retrofit Capital Cost Estimate--Plant B	6-95
6-25	Revised Retrofit Capital Cost Estimate--Plant B	6-97
6-26	Retrofit Annual Operating Cost Estimate--Plant B--North and South Plants	6-99
6-27	Major Retrofit Items--Plant C--PDP Design	6-107
6-28	Major Retrofit Items--Plant C--Alcan Design	6-109

Table		Page
6-29	Retrofit Increments of Progress--Place C	6-111
6-30	Emissions Before and After Retrofit--Place C--Lines 1, 2, and 3	6-112
6-31	Retrofit Capital Cost--Plact C--Lines 1, 2, and 3	6-115
6-32	1974 Annual Cost--Plant C--Lines 1, 2, and 3	6-116
6-33	Potroom Retrofit Emission Reductions and Costs for Ten Primary Aluminum Plants	6-118
6-34	Sequence of Major Activities in Design and Construction of Air Emission Control for an existing Primary Aluminum Plant	6-128
6-35	Delivery Times for Items Required to Construct Emission Controls for Primary Aluminum Plants	6-131
6-36	Total Construction Time for Retrofit Emission Controls for Primary Aluminum Plants	6-133
6-37	Increments of Progress for Installation of Fluoride Emission Controls in an Existing Primary Aluminum Plant	6-134
7-1	Primary Aluminum Plant Capacity by Cell Type	7-3
7-2	Total Fluoride Emissions by Cell Type without 111(d) Regulations	7-4
7-3	Primary Aluminum Control Strategies	7-5
7-4	Control Modules for Upgrading Existing Aluminum Plants. Capital Costs	7-12
7-5	Waste Water Lime Treatment Investment Cost by Size of Plant	7-15
7-6	Fixed Cost Components	7-17
7-7	Control Modules for Upgrading Existing Aluminum Plants. Annualized Cost	7-18
7-8	Waste Water Treatment Plant Operating Cost	7-19
7-9	Primary Aluminum Control Strategies	7-21

Table		Page
8-1	Control Equipment and Costs	8-4
8-2	The Use of Capital Cost Modules	8-3
8-3	State Guidelines for Control of Fluoride Emissions from Existing Primary Aluminum Plants	8-7
8-4	Fluoride Emission Ranges Corresponding to State Guidelines for Existing Primary Aluminum Plants	8-8
9-1	National Total Fluoride Emissions from Primary Aluminum Reduction Cells	9-4
9-2	Average Fluoride Emissions for Primary Aluminum Reduction Cells	9-5
9-3	Fluoride Emission Control Systems with Extreme Air Pollution Impacts	9-7
9-4	Fluoride Emissions at Plants A, B, and C	9-9
9-5	Maximum 30-day Average Ambient Fluoride Concentrations in the Vicinity of Plants A, B, and C	9-13
9-6	National Particulate Emissions from Primary Aluminum Reduction Cells	9-15
9-7	Average Particulate Emissions for Primary Aluminum Reduction Cells	9-16
9-8	Anode Bake Plant Air Pollutant Emissions	9-17
9-9	Effluent Limitations for Primary Aluminum Plants	9-19
9-10	National Effluent Emissions from Primary Aluminum Plants	9-21
9-11	Average Effluent Emissions from Primary Aluminum Reduction Plants	9-22
9-12	Extent of Wet Controls at Alternative Levels of Fluoride Air Emissions Control	9-23
9-13	Fluoride Air Emissions Control Schemes with Extreme Water Pollution Impacts	9-25
9-14	Solid Waste Generation for Various Fluoride Emissions Control Schemes	9-27

Table		Page
9-15	National Solid Waste Generation from Fluoride Control by the Parimary Aluminum Industry	9-28
9-16	Average Solid Waste Generation Resulting from Fluoride Control for the Primary Aluminum Industry	9-29
9-17	Fluoride Emissions Control Systems with Extreme Solid Waste Impacts	9-31
9-18	Energy Requirements for Primary Aluminum Fluoride Emission Control System	9-33
9-19	National Fluoride Emissions Control Energy Requirements for the Primary Aluminum Industry	9-35
9-20	Average Fluoride Emissions Control Energy Requirements for the Primary Aluminum Industry	9-36
9-21	Fluoride Emissions Control Systems with Extreme Energy Impacts	9-38
9-22	National Criteria Pollutant Emissions Resulting from the Electric Power Generated to Control Primary Aluminum Fluoride Emissions	9-40
9-23	National Bituminous Coal Requirements Implied by Primary Aluminum Fluoride Control	9-41
9-24	Environmental Impact of No Fluoride Emission Guidelines for the Primary Aluminum Industry	9-44

LIST OF FIGURES

Figure		Page
4-1	Aluminum Reduction Process	4-2
4-2	Aluminum Reduction Cell Diagram	4-3
4-3	Typical Plan View of a Potroom	4-6
4-4	Typical Elevation View of a Potroom	4-6
4-5	General Flow Diagram for Primary Aluminum Reduction	4-8
4-6	Flow Diagram for Preparation of Prebake Anodes	4-9
4-7	Details of Prebake Reduction Cell	4-15
4-8	Details of Vertical Stud Soderberg Reduction Cell	4-17
4-9	Details of Horizontal Stud Soderberg Reduction Cell	4-19
5-1	Prebake Plant with Anode Ring Furnace	5-2
5-2	Potroom Fluoride Emission Balance	5-3
5-3	Room Collection System, Sidewall Entry	5-6
5-4	Room Collection System, Basement Entry	5-6
5-5	Specific Prebake Potroom Fluoride Balance	5-7
5-6	Particle Size Weight Distribution of Potline Primary Cell Emissions	5-10
5-7	Particle Size Weight Distribution of HSS Primary Cell Emissions	5-12
6-1	Typical Prebake Cell Hooding	6-3
6-2	Typical Horizontal Stud Soderberg Cell Hooding	6-7
6-3	Typical Vertical Stud Soderberg Cell Hooding	6-9
6-4	Primary Collection Systems: Typical Ducting Layouts for a Single Prebake Potline with 160 Cells, 2 Rooms	6-24
6-5	Primary Collection Systems: Typical Ducting Layout for a Single VSS Potline with 160 Cells, 2 Rooms	6-25

Figure		Page
6-6	Primary Collection Systems: Typical Ducting Layouts for a Single HSS Potline with 160 Cells, 2 Rooms	6-26
6-7	Flow Diagram for Fluidized Bed Dry Scrubbing Process	6-31
6-8	Flow Diagram for Injected Alumina Dry Scrubbing Process	6-33
6-9	Unpowered Roof Spray Screen	6-40
6-10	Powered Potroom Spray Screen Scrubber	6-41
6-11	Powered Spray Screen Scrubber	6-42
6-12	Powered Monitor Spray Screen Scrubber	6-43
6-13	Retrofit Layout--Plant A--Lines 1 and 2	6-56
6-14	Retrofit Layout--Plant A--Line 4	6-62
6-15	Retrofit Layout--Plant B--South Plant	6-79
6-16	Retrofit Layout--Plant B--North Plant	6-83
6-17	Retrofit Layout--Plant B--Cryolite Recovery Plant	6-91
6-18	Flow Diagram--Plant C--Injected Alumina Process	6-104
6-19	Retrofit Schematic--Plant C--PDP Design	6-106
6-20	Retrofit Schematic--Plant C--Alcan Design	6-108
6-21	Diagrammatic Representation of Activity Schedules on a Major Process Industry Construction Project	6-130
7-1	Investment and Annualized Costs for Waste Water Treatment Plants vs. Aluminum Plant Capacity	7-20

1. INTRODUCTION AND SUMMARY

1.1 INTRODUCTION

Section 111(d) of the Clean Air Act, 42 U.S.C. 7411(d), as amended, requires EPA to establish procedures under which States submit plans to control certain existing sources of certain pollutants. On November 17, 1975 (40 FR 53340), EPA implemented section 111(d) by promulgating Subpart B of 40 CFR Part 60, establishing procedures and requirements for adoption and submittal of State plans for control of "designated pollutants" from "designated facilities." Designated pollutants are pollutants which are not included on a list published under section 108(a) of the Act (National Ambient Air Quality Standards) or section 112(b)(1)(A) (Hazardous Air Pollutants), but for which standards of performance for new sources have been established under section 111(b). A designated facility is an existing facility which emits a designated pollutant and which would be subject to a standard of performance for that pollutant if the existing facility were new.

Standards of performance for three categories of new sources in the primary aluminum industry were promulgated in the FEDERAL REGISTER (40 FR 3826) on January 26, 1976, to be incorporated into the Code of Federal Regulations under 40 CFR Part 60. New subpart S was added to set standards of performance for fluoride emissions from new and modified affected facilities within primary aluminum reduction plants. The States, therefore, are required to adopt fluoride emission standards for existing primary aluminum plants which would be subject to the standard of performance if they were new.

Subpart B of 40 CFR Part 60 provides that EPA will publish a guideline document for development of State emission standards after promulgation of any standard of performance for a designated pollutant. The document will specify emission guidelines and times for compliance and will include other pertinent information, such as discussion of the pollutant's effects on public health and welfare and a description of control techniques and their effectiveness and costs. The emission guidelines will reflect the degrees of emission reduction attainable with the best adequately demonstrated systems of emission reduction, considering costs as applied to existing facilities.

After publication of a final guideline document for the pollutant in question, the states will have nine months to develop and submit plans for control of that pollutant from designated facilities. Within four months after the date of submission of plans, the Administrator will approve or disapprove each plan (or portions thereof). If a State plan (or portion therefor) is disapproved, the Administrator will promulgate a plan (or portion thereof) within six months after the date for plan submission. These and related provisions of subpart B are basically patterned after section 110 of the Act and 40 CFR Part 51 (concerning adoption and submittal of state implementation plans under section 110).

As discussed in the preamble to subpart B, a distinction is drawn between designated pollutants which may cause or contribute to endangerment of public health (referred to as "health-related pollutants") and those for which adverse effects on public health have not been demonstrated (referred to as "welfare-related pollutants"). For

health-related pollutants, emission standards and compliance times in state plans must ordinarily be at least as stringent as the corresponding emission guidelines and compliance times in EPA's guideline documents. As provided in Subpart B, States may apply less stringent requirements for particular facilities or classes of facilities when economic factors or physical limitations make such application significantly more reasonable.

For welfare-related pollutants, States may balance the emission guidelines, times for compliance, and other information provided in a guideline document against other factors of public concern in establishing emission standards, compliance schedules, and variances, provided that appropriate consideration is given to the information presented in the guideline document and at public hearing(s) required by subpart B and that all other requirements of subpart B are met. Where sources of pollutants that cause only adverse effects to crops are located in non-agricultural areas, for example, or where residents of a community depend on an economically marginal plant for their livelihood, such factors may be taken into account (in addition to those that would justify variances if a health-related pollutant were involved). Thus, States will have substantial flexibility to consider factors other than technology and cost in establishing plans for the control of welfare-related pollutants if they wish. In developing and applying standards for existing primary aluminum plants, the States are encouraged to take into consideration, among other factors, the remaining useful life of the affected facility. Where a facility includes both old and new cells, it may be

reasonable to apply less stringent standards to the old cells provided that they are significantly closer to retirement than the new cells.

For reasons discussed in chapter 2 of this document, the Administrator has determined that fluoride emissions from primary aluminum plants may cause or contribute to endangerment of the public welfare but that adverse effects on public health have not been demonstrated. As discussed above, this means that fluoride emissions will be considered a welfare-related pollutant and the States will have greater flexibility in establishing plans for the control of fluorides than would be the case if public health might be affected.

This guideline document for primary aluminum plant fluoride emissions provides a brief description of the primary aluminum industry and an explanation of the four types of electrolytic cells, along with a summary of national statistics on production, plant location, cell type, and future trends. The causes, nature, and source of fluoride emissions from primary aluminum reduction are discussed, and the health effects associated with this pollutant are described. The greatest emphasis, however, has been placed on the technical and economic evaluation of control techniques that are effective in reducing fluoride emissions, with particular emphasis on the retrofit of existing plants. Because of this emphasis, EPA personnel visited nine primary aluminum plants to gather engineering information and cost data on actual emission control retrofits. Detailed trip reports were composed as background source materials to support this document. Section 6.3 presents "retrofit case descriptions" for three of the nine plants visited: these case

descriptions give in depth engineering scopes of work including plant layouts to scale; duct sizes and lengths; major items of structure, emission control, and auxiliaries, along with cost breakdowns; and air emission reductions realized for the money spent.

The control equipment and the emission guidelines on which they are based are discussed in Chapters 6 and 8. The environmental assessment of the emission guidelines, including their effects on energy and aqueous and solid wastes, is presented and discussed in Chapter 9. The remainder of this introductory chapter summarizes information presented in subsequent sections.

1.2 HEALTH AND WELFARE EFFECTS OF FLUORIDES

Fluoride emissions from primary aluminum plants have been determined to be welfare related [i.e. no demonstrated impact upon public health for purposes of section 111(d)]. The daily intake of fluoride inhaled from the ambient air is only a few hundredths of a milligram - a very small fraction of the total intake of the average person. If a person is exposed to ambient air containing about eight micrograms (μg) of fluoride per cubic meter, which is the maximum average concentration that is projected in the vicinity of a primary aluminum facility with only moderate control equipment (Table 9-5), his total daily intake from this source is calculated to be about 150 μg. This is very low when compared with the estimated daily intake of about 1200 μg from food, water and other sources for the average person. Also, the intake of fluoride indirectly through standard food chains is insignificant. Fluorides are not passed into dairy products and are only found in farm produce in very small amounts.

Fluorides do, however, cause damage to livestock and vegetation in the immediate vicinity of primary aluminum plants. Ingestion of fluorides by livestock from hay and forage causes bone lesions, lameness and impairment of appetite that can result in decreased weight gain or diminished milk yield. It can also affect developing teeth in young animals, causing more or less severe abnormalities in permanent teeth. Exposure of plants to atmospheric fluorides can result in accumulation, foliar lesions, and alteration in plant development, growth, and yield.

1.3 FLUORIDES AND THEIR CONTROL

1.3.1 Fluorides

For purposes of standards of performance for new stationary sources, (SPNSS) and the attendant requirements of section 111(d), "total fluorides" means the particulate and gaseous fluorides that are measured by test methods as set forth in Methods 13A, 13B and 14, Appendix A to 40 CFR Part 60.

Particulate fluorides emitted from primary aluminum plants include cryolite (Na_3AlF_6), aluminum fluoride (AlF_3), calcium fluoride (CaF_2), and chiolite ($Na_5Al_3F_{14}$).

The principal gaseous fluoride compounds emitted during normal operation are hydrogen fluoride (HF) and silicon tetrafluoride (SiF_4).

The intent of the SPNSS is to limit emissions of all of the above fluoride compounds. EPA source tests have shown that if fluorides are well-controlled, the resulting control of particulates and organics will also be improved. Control of all these pollutants requires good capture of gases from the electrolytic cell and good fluoride removal from the captured cell gases. Good capture requires not only good cell and ventilation system design, but also superior equipment maintenance and

careful cell working in a manner to minimize the time during which any cell or cell door is open. Thus, the SPNSS requires control by other methods than best practical design alone.

1.3.2 Control of Fluorides: New Primary Aluminum Plants

In accordance with section 111 of the Clean Air Act, standards of performance were promulgated on January 26, 1976, for total fluoride and visible air emissions from new modified, or reconstructed primary aluminum plants. (40 CFR 60 - Subpart S).

Section 60.192 of Subpart S states that no owner or operator shall cause to be discharged into the atmosphere from any affected facility any gases which contain total fluorides in excess of:

(1) 1 kg/Mg (2 lb/ton) of aluminum produced for vertical stud Soderberg and horizontal stud Soderberg plants;

(2) 0.95 kg/Mg (1.9 lb/ton) of aluminum produced for potroom groups at prebake plants; and

(3) 0.05 kg/Mg (0.1 lb/ton) of aluminum equivalent for anode bake plants.

The owner shall record aluminum and anode production with an accuracy of $\pm$ 5 percent. In addition, the air pollution control system for each affected facility shall be designed for accurate volumetric flow rate determination and representative total fluoride sampling.

Amendments to Subpart S were proposed on September 19, 1978 (43 FR 42188) and are scheduled for promulgation in late 1979.

Table 1-1, based on Table 5-2, gives emissions for each of the aluminum reduction cell types, and indicates overall control efficiencies for total fluorides. It is evident that future new plants will require much better control.

Table 1-1. POTROOM TOTAL FLUORIDE EMISSIONS IN U.S., 1975

Cell Type[a]	Controlled and Uncontrolled Plants			Controlled Plants		
	Average Emissions $\frac{g\ F}{kg\ Al}$	Average Emissions $\frac{lb\ F}{ton\ Al}$	Overall Control Efficiency, %	Average Emissions $\frac{g\ F}{kg\ Al}$	Average Emissions $\frac{lb\ F}{ton\ Al}$	Overall Control Efficiency, %
CWPB	3.15	6.3	85	2.3	4.6	89
SWPB	6.3	13.0	71	2.4	4.8	89
HSS	2.85	5.7	83	2.85	5.7	83
VSS	2.6	5.2	88	2.5	5.2	88
All Cell Types	3.5	7.0	83	2.5	5.0	88

[a]CWPB - center-worked prebake; SWPB - side-worked prebake; HSS - horizontal stud Soderberg; VSS - vertical stud Soderberg.

1.3.3 Control of Fluorides: Existing Primary Aluminum Plants

The intent of Subpart B is to apply best adequately demonstrated control in order to limit the emissions of designated pollutants from designated facilities. As applied to Subpart S, this means applying particulate and gaseous fluoride control to existing primary aluminum plants.

Table 1-2 is based on Table 6-33 and summarizes costs and total emission reductions for retrofit emission controls at 10 primary aluminum plants visited and studied by EPA personnel.[1] Plants A, B, and C represent those that are presented as retrofit case descriptions in Sections 6.3.1, 6.3.2, and 6.3.3, respectively. Cost and retrofit information for plants D through M is much less complete and detailed. Table 1-3 identifies the retrofit controls used on eight of the plants visited.

As Table 1-3 indicates, one or two of the retrofits were not fully installed when the costs were collected; the final costs of these were therefore not known. Plants A and B (Table 1-2) were chosen for case descriptions over plants D through G for several reasons other than cost alone. Indeed, a rating system was used to choose the best three of the seven plants for retrofit case descriptions. Additional rating factors included amount of available engineering description, decrease in fluoride emissions by retrofitting, and quality of emission data before and after retrofitting.

Table 1-2. RETROFIT EMISSION REDUCTIONS AND COSTS FOR TEN PRIMARY ALUMINUM PLANTS

Plant code	Cell type[a]	Plant capacity, short tons/yr	Total emissions, lb F/ton Al		Retrofit capital cost, $/ton Al	Change in annual operating cost, $/ton Al
			Before retrofit[b]	After retrofit[b]		
G	CWPB	250,000	19.0	2.7	124	NA
D	CWPB	115,000	7.8	2.6	102	NA
F	CWPB	32,850	5.1	1.2	54	NA
H	CWPB	130,000	6.9	2.5	216	NA
C	SWPB	265,000	9.0	1.3	54	3.53[c]
K	SWPB	35,000	7.7	10.6[d]	121	NA
A	HSS	80,000	9.3	2.4	141	-4.78[e]
B	HSS	210,000	5.4	2.9	92	0.81
E	VSS	91,000	4.2	2.0	64	NA
M	VSS	180,000	5.3	1.9	115	0.57

[a]CWPB - center-worked prebake; SWPB - side-worked prebake; HSS - horizontal stud Soderberg; VSS - vertical stud Soderberg.

[b]Average primary and secondary total fluoride emissions.

[c]Credit not taken for fluoride adsorbed on alumina and returned to process.

[d]See Section 6.3.4.2.

[e]Credit taken.

Table 1-3. RETROFIT CONTROLS FOR EIGHT PRIMARY ALUMINUM PLANTS

Plant code	Retrofit control		Retrofit status (March 1975)
	Primary	Secondary	
G	Collection system Dry scrubbing	None	Started 4/73; complete early 1976 Start mid-1975; complete about 7/78
D	Dry scrubbing	None	Started 9/71; complete 8/74
F	Dry scrubbing	None	Completed in May 1970
C	Dry scrubbing	No change	Completed in Spring 1973
A	Dry scrubbing	None	Started 7/72; complete 9/74
H	Dry scrubbing	None	Started 5/75; complete early 1977
B	Wet ESP[a]	None	Started late 1970; complete about 6/75
E	Wet ESP	Elevated scrubbers	Complete

[a]ESP - electrostatic precipitator.

Table 1-2 indicates that dry scrubbing - baghouse devices can be retrofitted to reduce total fluorides. Dry scrubbing absorbs gaseous fluoride on alumina. This is followed by baghouse collection of residual particulate fluoride and alumina. Both the alumina and fluorides can then be recycled to the electrolytic cells, thus avoiding a solid and liquid waste problem. Wet electrostatic precipitators (ESP) can approach the dry scrubber in performance, but they produce an aqueous waste and must be coupled with scrubbers to absorb all of the HF.

The important message in Table 1-2 is that fluoride controls installed in existing primary aluminum plants vary greatly in capital cost and even in operating costs. Indeed, the actual control must be specified to the plant and tailor-made for it. No off-the-shelf control devices are available and retrofit emission control models are valid only for the conditions and situations upon which they are based, when single plants are studied.

Under the Clean Air Act Amendments of 1977, existing facilities must be controlled to the degree of emission reduction attainable with the best adequately demonstrated system, considering costs and any non-air quality health, environmental impact, and energy requirements. For fluoride emission control from existing primary aluminum facilities, the efficient removal of fluorides from a gas stream is relatively easy. However, a significant portion of the gaseous emissions from the reduction cells can escape capture by the collection hoods, thus by-passing the primary control system. This situation results in two types of emissions: those captured by the hood system which pass through the primary control device

(or primary emissions) and those which elude the hood system and exit the building through the roof monitors (or secondary emissions).

Examination of the average fluoride removal efficiencies of primary (98.5% removal) and secondary (75% removal) control devices reveals the importance of good capture of reduction cell emissions by the primary collection system. Most plants presently do not control secondary emissions. The conclusion, therefore, is that the best system of emission reduction, considering costs, is an effective hooding system (which minimizes secondary emissions) in combination with wet or dry scrubbing of the primary gases. Because of the relative cell gas volumes of differing cell designs and plant ages; the physical layout of the plant which in turn affects duct lengths, available space and access to areas; the variation in nature and amount of required demolishments, movings, and removals; and the availability of electrical power; the necessary collection and control system must be plant-specific.

As illustration of the preceding paragraph, capital costs in dollars per ton of aluminum produced vary up to threefold or more among the ten primary aluminum plants shown in Table 1-2. This variation was approached among the three plants detailed as case descriptions.

1.4 EMISSION GUIDELINES

1.4.1 State Emission Guidelines

Table 1.4 presents the State guidelines for control of total fluoride emissions from existing primary aluminum plants. These guidelines consist of: recommended control technologies that EPA believes can readily achieve the stated fluoride collection and removal efficiencies; an indication of the status of primary control on a national basis, and the conditions under which better primary control should be installed or secondary control

Table 1-4. STATE GUIDELINES FOR CONTROL OF FLUORIDE EMISSIONS FROM EXISTING PRIMARY ALUMINUM PLANTS

Cell Type	Recommended Efficiencies for Proposed Retrofits			Guideline Recommendations
	Primary Collection	Primary Removal	Secondary Removal	
VSS	80	98.5	75 (a)	All plants now have best achievable hooding and primary removal. Install secondary control, but only if justified depending on severity of fluoride problem.
SWPB	80	98.5	75 (a)	Install best available hooding and primary removal equipment. Install secondary control wherever justified, depending on the severity of the fluoride problem.
HSS	90 (a)	98.5 (a)		All plants but #26 now have the best achievable primary collection efficiency. Plant #26 should install best primary control if needed.* Secondary control does not appear to be justified, in most locations.
CWPB	95 (a)	98.5 (a)		Best control is best hooding and primary removal equipment. Install where needed. Secondary control does not appear to be justified, in most locations.

* Plant #26; see Tables 7-2 and 7-3

(a) See Section 1.4.1

added.

Column 1 of Table 1-4 shows each of the four primary aluminum electrolytic cell types. Column 2 shows the corresponding primary collection (hooding) efficiencies chosen by EPA as readily achievable for new retrofits. The values in Columns 3 and 4 were similarly chosen for primary and secondary removal efficiencies, respectively, for new retrofits.

Column 5 of Table 1-4 gives EPA findings and recommendations. All VSS plants and all but one HSS plant currently (1975) have best achievable primary collection efficiency, and the VSS plants all have the best achievable primary removal. The best available primary control systems should be installed on SWPB and CWPB plants. Secondary controls may be installed on VSS and on SWPB plants with severe fluoride problems, but do not appear to be justified on HSS and CWPB plants in most locations. It is assumed that anode butts will be carefully cleaned and their fluoride content minimized before recycle to the anode bake plant; otherwise, anode bake plant control should be required, depending upon the severity of the fluoride problem.

The primary collection (hooding) efficiencies were chosen from values calculated by EPA and compared--with good agreement--to values measured or otherwise arrived at by plant owners. These derivations of hooding efficiencies are discussed in detail in Section 6.1.2 and elsewhere.[2] Well-designed retrofit hoods can easily obtain the tabulated efficiencies if properly maintained and if the cells are carefully operated. Similarly, good retrofit dry scrubbers or spray tower-electrostatic precipitator combinations can readily achieve 98.5 percent fluoride removal.

Some existing secondary removal units (scrubbers) may not be able to achieve 75 percent efficiency (see Section 6.2.3). Control officials should carefully study costs, impacts, and energy requirements before requiring either improvements or initial retrofits. Table 6-10 presents data from

five U.S. plants that had secondary scrubbing following primary control, and fluoride loadings to secondary of 5.7 to 8 lbs F/ton Al. Four of these plants achieved secondary fluoride removal of at least 75 percent. If it were possible through considerable effort to increase hooding efficiencies in a plant of these types to approach 90 percent, the secondary scrubber efficiency would tend to decrease, but this probably would not overbalance the fine performance of the hoods. In this case, the control official should balance the overall controlled fluoride emission against costs and the local fluoride problem.

If hooding were added to, or replaced on, an existing HSS plant, EPA believes that modern technology can achieve 90% collection efficiency, in almost all cases. A plant may exist, however, where there is insufficient space to install proper ducting, or it may be economically impractical to install best hooding.

If a modern primary removal system were added to, or replaced on, an existing HSS plant, EPA believes that modern technology can achieve 98.5% removal efficiency. A modern spray tower added ahead of existing wet ESP's can raise primary removal efficiency to 98.5. This spray tower addition may be economically impractical if sufficient space does not exist within a reasonable distance of fluoride source and wet ESP.

If an HSS plant has existing primary collection efficiency of 85-90% and primary removal efficiencies of 95 - 98.5%, control agencies should closely study costs and benefits, before requiring retrofits. In the above efficiency ranges, retrofit does not seem justified unless there is a local fluoride problem.

If hooding were added to, or replaced on, an existing CWPB plant, EPA believes that modern technology can achieve 95% collection efficiency, in almost all cases. A plant may exist, however, where there is insufficient

space to install proper ducting, or it may be economically impractical to install best hooding.

If a modern primary removal system were added to, or replaced on, an existing CWPB plant, EPA believes that modern technology can achieve 98.5% removal efficiency.

If a CWPB plant has existing primary collection efficiency of 90-95% and primary removal efficiencies of 95 - 98.5%, control agencies should closely study costs and benefits, before requiring retrofits. In the above efficiency ranges, retrofit does not seem justified unless there is a local fluoride problem.

1.4.2 Performance of Recommended Emission Controls

Table 1-5 shows the performance to be expected by application of the State guidelines for control of emissions from existing primary aluminum plants. The performances are expressed as average fluoride emissions, in Column 7; they were calculated with equation 7.1, using the cell evolution values in Column 6 and the recommended fluoride collection and removal efficiencies of Columns 2-4. The cell fluoride evolution values in Column 6 correspond to the largest and smallest values reported by industry for the given cell types. Therefore, the average fluoride emission values shown in the last column of Table 1-5 represent expected ranges. For example, the last column shows that the average emissions from CWPB plants will range from 1.7 - 4.2 lbs F/ton Al, provided that all these plants have or install controls equivalent to 95 percent hooding efficiency and 98.5 percent primary removal efficiency.

The incremental cost effectiveness for the guidelines of Table 1-4 can be inferred from those given in Table 7-9. Secondary control of HSS and CWPB cells has very high incremental cost effectiveness of $10 - $40

Table 1-5. FLUORIDE EMISSION RANGES CORRESPONDING TO STATE GUIDELINES FOR EXISTING PRIMARY ALUMINUM PLANTS

Cell Type	Recommended Efficiencies for Proposed Retrofits			Guideline Recommendations	Assumed Average Fluoride Cell Evolution-lb/ton Al	Average Fluoride Emission range, lb F/ton Al
	Primary Collection	Primary Removal	Secondary Removal			Control
VSS	80	98.5	75	All plants now have best achievable hooding and primary removal. Install secondary control, but only if justified, depending on severity of fluoride problem.	30 - 54	Primary 6.4* - 11.4 Secondary 1.9** - 3.4
SWPB	80	98.5	75	Install best available hooding and primary revmoval equipment. Install secondary control wherever justified, depending on the severity of the fluoride problem.	37 - 53	Primary 7.8 - 11.2 Secondary 2.3 - 3.3
HSS	90	98.5		Install best primary control if needed. All plants but #26 now have best achievable primary collection efficiency. Secondary control does not appear to be justified, in most locations.	28 - 45	Primary 3.2 - 5.1 Secondary 1.1 - 1.7
CWPB	95	98.5		Best control is best hooding and primary removal equipment. Install where needed. Secondary control does not appear to be justified, in most locations.	26 - 66	Primary 1.7 - 4.2 Secondary --- ---

* 30 [1 - .80 x .985] = 6.4 lbs F/ton Al

** 30 [1 - .80 x .985 - (1 - .80) x .75] = 1.9 lbs F/ton Al

per pound of fluoride removal. Corresponding figures for VSS are $4 - $8 per pound and are a minimum of $4 per pound for SWPB.

The States should, therefore, be guided by the principles set forth in this discussion and in Section 8, and should set emission limits with consideration of severity of fluoride problem, costs, and any nonair quality health and environmental impact and energy requirements.

It should be noted that changes in the cell bath ratio, NaF/AlF_3, will change a cell evolution rate, which will change - or tend to change - the emissions from the fluoride control devices.

It is important to emphasize here that the new source performance standards quoted in Section 1.3.2 apply limits not to be exceeded to new plants; however, the calculated emissions that illustrate the State guidelines for existing plants are averages, only.

1.4.3. Emission Testing

The above guidelines are structured to give the States maximum flexibility in use of existing emission control, and of source sampling and analytical methods adapted to each plant. State regulations are now in place which limit fluoride emissions from existing primary aluminum plants. These regulations vary from State to State and differ from Federal new source performance standards. EPA compliance test reference methods 13(a), 13(b), and 14 were developed for use with these new source performance standards. However, installation of Method 14 ductwork on existing plants may be very expensive in some cases, or may even be precluded because of unadaptability to the existing roof monitor. Therefore, in order to avoid costly and unnecessary modifications of roof monitor sampling systems, EPA does not specify compliance testing for existing plants.

1.5 ASSESSMENTS

1.5.1 Economic

Control costs might have been derived from Table 1-2, where actual costs for retrofit emission controls are shown. However, the plant sample is not large, even though all four cell types are represented. Also, the costs of greater or lesser degrees of control would be difficult to estimate. Considerable engineering design, quotations, and drawings would be required to make these emission level costs consistent in quality with the actual costs shown in Table 1-2.

The model approach of reference 3 was used to investigate the effects of various controlled fluoride emission levels on costs. Nineteen costed control modules were chosen to represent various degrees of emission collection and control. For example, capital cost modules for a prebake plant included those for hooding improvement, primary collection system, and for fluidized bed dry scrubber. The latter two items represent different degrees of fluoride emissions control and also different costs. The total retrofit capital cost for a given plant is estimated by determining the items that have to be improved, installed, dismantled or replaced, and adding the corresponding control module costs.

The control modules are based on generalized costs applicable to courtyard control systems. They are also based on typical values of gas

volumes to primary and secondary controls. In addition, control costs per unit of production derived by using these modules do not vary significantly with plant size. These, and other assumptions underlying the modules, are approximations. In general, direct cost comparison with specific plants is not justified.

The value of models lies mainly in their ability to evaluate changes, not to estimate accurate construction costs. The latter requires very accurate information; the former is less demanding since errors tend to cancel out when differences are measured. This offsetting of positive and negative cost errors should reduce the average error as the number of plants studied increases. The cost differences among levels of control should be more realistic than absolute cost levels.

Fluoride emission control costs were arrived at by the following general process:

1. Data shown in Table 7-2 were obtained on fluoride emissions from the 31 U.S. primary aluminum plants, along with current fluoride controls at these plants. Cell evolution rates, primary and secondary loadings, and emissions were obtained mostly from Section 114 letter responses from plants representing 86 percent of CWPB capacity and all of the domestic VSS, HSS, and SWPB capacity.

   The initial, or existing controls and corresponding performances for each plant are illustrated in Table 7-2.

2. Eight plants were taken for study and illustration and additional controls were added for logical steps from existing to better control combinations. Specifically, these steps were to install:

a. Best primary collection for the cell type, if needed.

b. Best primary removal and water treatment, if needed.

c. Secondary control with scrubber water treatment.

d. Anode bake plant control system and water treatment, if needed.

The cost results for all eight plants are given in September 1977 dollars in Table 7-9, part of which is reproduced below as Table 1-6 for purposes of illustration. Table 7-9 is too limited to allow making general statements on costs of other plants, but the following tabulation will serve to illustrate how model costs can be drawn up. For HSS plant 26 as illustrated:

	$/Annual Ton Al
Install lime treatment of cryolite bleed stream	$ 2.43
Improve hooding	18.54
Install wet ESP	243.09
Remove spray tower	6.10
Install lime treatment for additional cryolite bleed stream	2.43
Install spray screen	97.36
Install waste water lime treatment	15.90
	$385.85

The capital cost of $386 per annual ton of aluminum results from addition of all the cost modules, and the annualized cost can be derived in the same way. Tables 7-4 and 7-7 contain these control module costs. As Table 1-6 shows, water treatment of cryolite bleed plus improved hooding

Table 1-6. PRIMARY ALUMINUM CONTROL STRATEGIES

Plant Code	Emission Control Required for the Specified Average Fluoride Emission: Hooding	Primary (1°) Controls	Secondary (2°) Controls	Average Fluoride Evolution lb/ton Al	Unit Costs: Capital $/ton Al.	Unit Costs: Annualized $/ton Al	Emissions Controlled lbF/ton Al.	Cost-Effectiveness: Cumulative $/lb F	Cost-Effectiveness: Incremental $/lb F
26	Poor	Spray tower	None	41.6	0	0	34.5	0	0
	"	Install lime treatment of cryolite bleed stream	"	"	2.43	1.04	34.5	0	0
	Improve Hooding	" " " "	"	"	20.97	5.68	18.4	0.35	0.35
	" "	Install wet ESP; remove spray tower.	"	"	270.16	61.13	5.7	2.12	4.37
	" "	Install lime treatment of additional cryolite bleed stream	"	"	272.59	62.17	5.7	2.16	4.45
	" "	" " "	Install spray screen and waste water lime treatment	"	386.01	101.02	2.5	3.16	12.14

costs $2.43 + $18.54 = $20.97 per annual ton, for a decrease in average fluoride emission of 16.1 lb F/ton Al. It costs $5.68 to remove 16.1 pounds of fluoride for a cumulative cost of $0.35 per pound of fluoride; in this case, the incremental cost is also the same. The cost effectiveness is based on the annualized cost.

1.5.2 Environmental

Table 1-7 gives the environmental impacts of best primary control and of maximum control. For best primary control, each existing plant is upgraded to the level of best cell hooding and primary control for that particular plant. This level is not meant to be the lowest national level of emission control improvement. However, the second case - that of maximum or best primary and secondary control - does represent the highest possible level of improvement. Thus, the environmental impacts of Table 1-7 bracket the conditions that should result from applying State guidelines. This table is based on the status of the primary aluminum domestic plants as of the Spring of 1975.

The table shows the annual removal of particulate emissions; good control of particulates is necessary for good fluoride removal.

There will be a negligible change in aqueous and solid wastes caused by adoption of State guidelines.

The data on cell fluoride emissions in the final rows of Table 1-7 indicate that existing plants require much better than current controls.

1.5,3 Energy

Table 1-7 shows the national tonnage of coal that is equivalent to the energy required for fluoride emission control. National control to the level of best hooding and primary control will increase fluoride control energy expenditures by as little as 120,000 megawatt hours per

Table 1-7. ENVIRONMENTAL IMPACT OF BEST CONTROL FOR TOTAL FLUORIDE EMISSIONS FROM THE PRIMARY ALUMINUM INDUSTRY

National Impacts	Fluoride Emissions Control Level		
	Existing	Best Hooding & Primary Control	Best Primary & Secondary Control
National Fluoride Air Emission (tons F/yr)	18,000	9,000	4,000
National Particulate Emissions (tons F/yr)	44,000	25,000	21,000
National Water Effluent Emissions (tons/yr)			
Fluoride	110	85	260
Total Suspended Solids	210	170	510
National Fluoride Control Energy Requirements (Mwh/yr)	1,470,000	1,590,000	2,900,000
National Solid Wastes from Fluoride Control (tons/yr)	160,000	130,000	220,000
Bituminous Coal Used for National Fluoride Control (tons/yr)	612,000	662,000	1,210,000
Average Fluoride Emissions, lb F/ton Al			
cell: CWPB	6.3	2.7	1.2
SWPB	13.0	4.0	2.2
VSS	5.2	5.2	2.1
HSS	5.7	4.0	1.7

year over existing control. This energy is equivalent to the generation of an additional 14 megawatts of electrical power nationally, or to an average incremental fluoride control power expense of 0.44 megawatts per plant. In comparison, an average of 283 megawatts of electrolytic power is required per domestic primary aluminum plant.

1.6 COMPLIANCE TIMES

The compliance times for the installation of a typical fluoride emission control system at a primary aluminum plant is shown in Table 1-8. This table represents a moderately complicated case involving the improvement of hooding and the installation of fluidized bed dry scrubbers. Such a project involves not only the installation of the very large dry scrubbers (see Figures 6-13 and 6-14) but also of storage and surge tanks, conveyors, fans and long lengths of huge ductwork with associated foundations, structural steelwork, and electrical drive systems.

As explained in Section 6.4, and indicated above, the large amount of material procurement causes an overlap of most design and construction activities. At a given time, numerous items are in various stages of design, procurement, and construction. For this reason, contracts for major items cannot be awarded simultaneously, but are made over a range of time as shown in Table 1-8.

One important step that is almost wholly beyond the control of the customer or the control official is the delivery time. Table 1-8 is based on delivery times as of the summer of 1974. The time required from order to delivery increased greatly from 1973 to 1974 and passed all former bounds for certain items used for adding retrofit controls at

primary aluminum plants. Thus, delivery reports gave 35-50 weeks for electrical switchgear, 25-60 weeks for fans and 35-65 weeks for electrical motors. Deliveries can depend partly upon quantity ordered, continuity of business through the years, and most favored customer status.

Table 1-8. INCREMENTS OF PROGRESS FOR INSTALLATION OF FLUORIDE EMISSION CONTROLS IN AN EXISTING PRIMARY ALUMINUM PLANT

Increments of progress	Elapsed time - weeks
Preliminary control plan and compliance schedule to appropriate agency	25
Award of major contracts	35 - 55
Start of construction	60
Completion of construction	124
Final compliance	130

Table 1-9 gives the time required to retrofit eight actual primary aluminum plants. In each case, the whole plant was retrofitted, except for plant F. Only plants C, E, and H had secondary control originally and only plant E improved its secondary control, at a cost of about 65 percent of its total retrofit expenditure. Plant B built and operated a pilot plant during two of the 4-1/2 years of retrofit activity. The completion time of 5-1/2 years for plant G includes 3 years for improved cell hooding and 3 years for dry scrubber installation. The 3 years for improved hooding is due to a claimed economic advantage for modifying cells over

Table 1-9 . TOTAL CONSTRUCTION TIME FOR RETROFIT EMISSION CONTROLS FOR PRIMARY ALUMINUM PLANTS

Plant Code	Cell Type	Plant Capacity (tons/yr)	Retrofit Capital Cost ($)	Description of Retrofit Emission Controls	Time Required for Retrofitting (years)
A	HSS	80,000	11,300,000	Dry scrubbers-primary	2-1/2
B	HSS	210,000	19,300,000	Improved cell hooding and wet ESP-primary	4-1/2
C	SWPB	265,000	14,300,000	New cell hooding and dry scrubbers-primary	3
D	CWPB	115,000	11,800,000	Dry scrubbers-primary	3
E	VSS	91,000	5,800,000	Wet ESP-primary Dormer tunnel-secondary	2-1/2
F	CWPB	32,850	1,800,000	Dry scrubbers-primary (1 potline)	1-1/2
G	CWPB	250,000	31,000,000	Improved cell hooding and dry scrubbers-primary	5-1/2
H	CWPB	130,000	28,000,000	Improved cell hooding and dry scrubbers-primary	2

the normal 3-year life of their cathode linings. Had plant G so elected, the dry scrubber installation could have proceeded simultaneously with cell hooding improvements, reducing the completion time to about 3 years.

The actual time requirements shown in Table 1-9 could probably have been decreased if there had, at the time, been a requirement or incentive to do so. With no capital return, the usual requirements for haste was reduced, except for any time when production could have been held up.

In view of the above discussion, a reasonable total time for retrofitting emission controls to a primary aluminum plant may be taken as about 3 years. However, because of the changing situation on equipment manufacturing and delivery times, and variable time requirements for financing, it is recommended that enforcement officials consider each plant on a case-by-case basis. They should require proof for the time requirements claimed for each milestone shown in Table 18. Additional time allowance may be made if it takes longer than indicated in Table 18 to reach compliance after completion of construction.

1.7 REFERENCES FOR SECTION 1

1. Varner, Bruce A. and Crane, George B. Actual Costs for Retrofit of Fluoride Emission Controls to Existing Primary Aluminum Plants. Paper presented at 83rd National Meeting American Institute of Chemical Engineers, Houston, Texas. March 20-24, 1977.

2. Varner, Bruce A. and Crane, George B. Estimation of Primary Collection Efficiency for New or Retrofit Hooding for Primary Aluminum Cells. Paper presented at 69th Annual Meeting of the Air Pollution Control Association, Portland, Oregon, June 27-July 1, 1976.

3. Air Pollution Control in the Primary Aluminum Industry. Singmaster and Breyer, New York, New York. Prepared for Office of Air Programs, Environmental Protection Agency, Research Triangle Park, North Carolina, under Contract Number CPA 70-21. July 1973.

2. HEALTH AND WELFARE EFFECTS OF FLUORIDES

2.1 INTRODUCTION

In accordance with 40 CFR 60.22(b), promulgated on November 17, 1975 (40 FR 53340), this chapter presents a summary of the available information on the potential health and welfare effects of fluorides and the rationale for the Administrator's determination that it is a welfare-related pollutant for purposes of section 111(d) of the Clean Air Act.

The Administrator first considers potential health and welfare effects of a designated pollutant in connection with the establishment of standards of performance for new sources of that pollutant under section 111(b) of the Act. Before such standards may be established, the Administrator must find that the pollutant in question "may contribute significantly to air pollution which causes or contributes to the endangerment of public health or welfare" [see section 111(b)(1)(a)]. Because this finding is, in effect, a prerequisite to the same pollutant's being identified as a designated pollutant under section 111(d), all designated pollutants will have been found to have potential adverse effects on public health, public welfare, or both.

As discussed in section 1.1 above, Subpart B of Part 60 distinguishes between designated pollutants that may cause or contribute to endangerment of public health (referred to as "health-related pollutants") and those for which adverse effects on public health have not been demonstrated ("welfare-related pollutants"). In general, the significance of the distinction is that States have more flexibility in establishing plans for the control of welfare-related pollutants than is provided for plans involving health-related pollutants.

In determining whether a designated pollutant is health-related or welfare-related for purposes of section 111(d), the Administrator considers such factors as: (1) Known and suspected effects of the pollutant on public health and welfare; (2) potential ambient concentrations of the pollutant; (3) generation of any secondary pollutants for which the designated pollutant may be a precursor; (4) any synergistic effect with other pollutants; and (5) potential effects from accumulation in the environment (e.g., soil, water and food chains).

It should be noted that the Administrator's determination whether a designated pollutant is health-related or welfare-related for purposes of section 111(d) does not affect the degree of control represented by EPA's emission guidelines. For reasons discussed in the preamble to Subpart B, EPA's emission guidelines [like standards of performance for new sources under section 111(b)] are based on the degree of control achievable with the best adequately demonstrated control systems (considering costs), rather than on direct protection of public health or welfare. This is true whether a particular designated pollutant has been found to be health-related or welfare-related. Thus, the only consequence of that finding is the degree of flexibility that will be available to the States in establishing plans for control of the pollutant, as indicated above.

2.2 EFFECT OF FLUORIDES ON HUMAN HEALTH[1]

2.2.1 Atmospheric Fluorides

The daily intake of fluoride inhaled from the ambient air is only a few hundredths of a milligram - a very small fraction of the total intake for the average person. If a person is exposed to ambient air containing about 8 micrograms (μg) of fluoride per cubic meter, which is the maximum average concentration that is projected in the vicinity of a primary

aluminum facility with only mediocre control equipment (Table 9-5), his total daily intake from this source is calculated to be about 150 μg. This is very low compared with the estimated daily intake of about 1200 μg from food, water, and other sources for the average person.

Few instances of health effects in people have been attributed to community airborne fluoride, and they occurred in investigations of the health of persons living in the immediate vicinity of fluoride-emitting industries. The only effects consistently observed are decreased tooth decay and slight mottling of tooth enamel when compared to control community observations. Crippling fluorosis resulting from industrial exposure to fluoride seldom (if ever) occurs today, owing to the establishment of and adherence to threshold limits for exposure of workers to fluoride. It has never been seen in the United States. Even persons occupationally exposed to airborne fluoride do not usually come in contact with fluoride concentrations exceeding the recommended industrial threshold limit values (TLV). The current TLV for hydrogen fluoride is 3 parts per million (ppm) while that for particulate fluoride is 2.5 milligrams per cubic meter (mg/m^3) expressed as elemental fluorine.

There is evidence that airborne fluoride concentrations that produce no plant injury contribute quantities of fluoride that are negligible in terms of possible adverse effects on human health and offer a satisfactory margin of protection for people.

Gaseous hydrogen fluoride is absorbed from the respiratory tract and through the skin. Fluoride retained in the body is found almost entirely in the bones and teeth. Under normal conditions, atmospheric

fluoride represents only a very small portion of the body fluoride burden.

2.2.2 Ingested Fluorides

Many careful studies, which were reviewed by the National Academy of Sciences, have been made of human populations living in the vicinity of large stationary sources of fluoride emissions. Even in situations where poisoning of grazing animals was present, no human illness due to fluoride poisoning has been found. In some of these areas much of the food used by the people was locally produced. Selection, processing, and cooking of vegetables, grains and fruits gives a much lower fluoride intake in human diets than in that of animals grazing on contaminated pasture.

In poisoned animals, fluorine levels are several thousand times normal in bone, and barely twice normal in milk or meat. Calves and lambs nursing from poisoned mothers do not have fluorosis. They do not develop poisoning until they begin to graze. Meat, milk and eggs from local animals contain very little more fluoride than the same foods from unpoisoned animals. This is due to the fact that fluorine is deposited in the bones almost entirely.

2.3 EFFECT OF FLUORIDES ON ANIMALS[1]

In areas where fluoride air pollution is a problem, high-fluoride vegetation is the major source of fluoride intake by livestock. Inhalation contributes only a negligible amount to the total fluoride intake of such animals.

The available evidence indicates that dairy cattle are the domestic animals most sensitive to fluorides, and protection of dairy cattle from adverse effects will protect other classes of livestock.

Ingestion of fluoride from hay and forage causes bone lesions, lameness, and impairment of appetite that can result in decreased weight gain or diminished milk yield. It can also affect developing teeth in young animals, causing more or less severe abnormalities in permanent teeth.

Experiments have indicated that long-term ingestion of 40 ppm or more of fluoride in the ration of dairy cattle will produce a significant incidence of lameness, bone lesions, and dental fluorosis, along with an effect on growth and milk production. Continual ingestion of a ration containing less than 40 ppm will give discernible but nondamaging effects. However, full protection requires that a time limit be placed on the period during which high intakes can be tolerated.

It has been suggested that dairy cattle can tolerate the ingestion of forage that averages 40 ppm of fluoride for a year, 60 ppm for up to 2 months and 80 ppm for up to 1 month. The usual food supplements are low in fluoride and will reduce the fluoride concentration of the total ration to the extent that they are fed.

Fluoride-containing dusts can be non-injurious to vegetation but contain hazardous amounts of fluoride in terms of forage for farm animals. Phosphate rock is an example of a dust that seemingly has not injured plants but is injurious to farm animals. This was made evident forty years ago when an attempt was made to feed phosphate rock as a dietary supplement source of calcium and phosphate. Fluoride injury quickly became apparent.[2] Phosphate rock is used for this purpose today, but only after defluorinating by heat treatment. Phosphate rock typically contains up to about four weight percent fluorine.

2.4 EFFECT OF ATMOSPHERIC FLUORIDES ON VEGETATION[1, 3, 4]

The previous sections state that atmospheric fluorides are not a direct problem to people or animals in the United States, but that animals could be seriously harmed by injestion of fluoride from forage. Indeed, the more important aspect of fluoride in the ambient air is its effect on vegetation and its accumulation in forage that leads to harmful effects in cattle and other animals. The hazard to these receptors is limited to particular areas: industrial sources having poorly controlled fluoride emissions and farms located in close proximity to facilities emitting fluorides.

Exposure of plants to atmospheric fluorides can result in accumulation, foliar lesions, and alteration in plant development, growth, and yield.[4] According to their response to fluorides, plants may be classed as sensitive, intermediate, and resistant. Sensitive plants include several conifers, several fruits and berries, and some grasses such as sweet corn and sorghum. Resistant plants include several deciduous trees and numerous vegetable and field crops. Most forage crops are tolerant or only moderately susceptible. In addition to differences among species and varieties, the duration of exposure, stage of development and rate of growth, and the environmental conditions and agricultural practices are important factors in determining the susceptibility of plants to fluorides.

The average concentration of fluoride in or on foliage that appears to be important for animals is 40 ppm. The available data suggest that a threshold for significant foliar necrosis on sensitive species, or an accumulation of fluoride in forage of more than 40 ppm would

result from exposure to a 30-day average air concentration of gaseous fluoride of about 0.5 micrograms per cubic meter ($\mu g/m^3$).

Examples of plant fluoride exposures that relate to leaf damage and crop reduction are shown in Table 2-1.[2] As shown, all varieties of sorghum and the less resistant varieties of corn and tomatoes are particularly susceptible to damage by fluoride ambient air concentrations projected in the immediate vicinity of primary aluminum facilities (See Table 9-5).

2.5 THE EFFECT OF ATMOSPHERIC FLUORIDES ON MATERIALS OF CONSTRUCTION

2.5.1 Etching of Glass[2]

It is well known that glass and other high-silica materials are etched by exposure to volatile fluorides like HF and SiF_4. Some experiments have been performed where panes of glass were fumigated with HF in chambers. Definite etching resulted from nine hours exposure at a level of 590 ppb. Pronounced etching resulted 14.5 hours exposure at 790 ppb. Such levels would, of course, cause extensive damage to many species of vegetation. However, ambient concentrations of this magnitude are improbable provided that a aluminum facility properly maintains and operates some type of control equipment for abating fluoride emissions.

2.5.2 Effects of Fluorides on Structures

At the relatively low gaseous concentrations of fluorides in emissions from industrial processes, 1000 ppm or less, the damage caused by fluorides is probably limited mostly to glass and brick. Occasionally, damage to the interior brick lining of a stack has been attributed to fluorides emitted in an industrial process.

Table 2-1. EXAMPLES OF HF CONCENTRATIONS AND EXPOSURE DURATIONS REPORTED TO CAUSE LEAF DAMAGE AND POTENTIAL REDUCTION IN CROP VALUES[2]

Plant	Concentration and Time Most sensitive varieties - most resistant varieties
Sorghum	0.7 ppb for 15 days - 15 ppb for 3 days
Corn	2 ppb for 10 days - 800 ppb for 4 hours
Tomato	10 ppb for 100 days - 700 ppb for 6 days
Alfalfa	100 ppb for 120 days - 700 ppb for 10 days

Fluoride damage occurs to the high silica brick used in the furnaces for baking carbon anodes for aluminum reduction cells.

2.6 RATIONALE

Based on the information provided the preceding sections of Chapter 2, it is clear that fluoride emissions from primary aluminum plants have no significant effect on human health. Fluoride emissions, however, do have adverse effects on livestock and vegetation. As Table 3-3 indicates, most of the domestic aluminum plants are located in agricultural, dairy, and forest environments. Therefore the Administrator has concluded that fluoride emissions from primary aluminum plants do not contribute to the endangerment of public health. Thus, fluoride emissions will be considered a welfare-related pollutant for purposes of section 111(d) and Subpart B of Part 60.

2.7 REFERENCES FOR SECTION 2

1. Biologic Effects of Atmospheric Pollutants: Fluorides. National Academy of Sciences, Washington, D.C. Prepared for Environmental Protection Agency, Durham, NC, under Contract Number CPA 70-42. 1971.

2. Robinson, J. M. et al. Engineering and Cost Effectiveness Study of Fluoride Emissions Control. Resources Research, Inc. and TRW Systems Group, McLean, VA. Prepared for Office of Air Programs, Environmental Protection Agency, Durham, NC, under Contract Number EHSD 71-14. January 1972.

3. Carlson, C. E. and Dewey, J. E. Environmental Pollution by Fluorides in Flathead National Forest and Glacier National Park. U.S. Department of Agriculture - Forest Service. Missoula, Montana. October 1971.

4. Jacobson, J.S. and Hill, A.C., editors: Recognition of Air Pollution Injury to Vegetation: A Pictorial Atlas. Air Pollution Control Association and National Air Pollution Control Association, 1970. p. D1-D17.

5. Peletti, E. Corrosion and Materials of Construction. In: Phosphoric Acid, Volume I, Slack, A. V. (ed). New York, Marcel Dekker, Inc., 1978. p. 779-884.

3. U. S. PRIMARY ALUMINUM MANUFACTURING STATISTICS

3.1 EXISTING PLANTS

3.1.1 Introduction

Aluminum ranks first in production among all nonferrous metals produced in the United States.[1] The United States is the world's leading producer of primary aluminum. Primary aluminum is produced by electrolytic reduction of alumina which in turn is produced by refining bauxite ore; secondary aluminum is produced by re-working aluminum scrap. Primary production in the U. S. in 1977 totalled 4.54 million short tons compared with an estimated world total of 15.05 million short tons.[2] U.S. production reached a record high in 1974 of 4.90 million short tons.

Primary capacity in the U.S. at the end of 1977 was estimated at 5.19 million short tons[3] and was accounted for by 31 plants.[4] At the end of 1977, there were 12 U.S. primary producers; about 65 percent of primary capacity was accounted for by three producers--Alcoa, Reynolds, and Kaiser.[3]

Aluminum produced by electrolytic reduction of alumina has an average purity of about 99.5 percent. The largest market for aluminum in 1977 was the building and construction field (23.1 percent), followed by transportation (21.7 percent), containers and packaging (20.8 percent), electrical (10.0 percent), consumer durables (7.9 percent), other - primarily for defense (4.2 percent), machinery and equipment (6.9 percent), and exports (5.4 percent).[5] Further refining of aluminum can produce "super purity" aluminum, which is 99.99 percent pure. This grade of aluminum is used as a catalyst carrier in making high octane gasoline, for forming jewelry, and, in the form of foil, for the electronics industry.

Molten primary aluminum may be shipped directly to a customer's plant in insulated ladles. More commonly, it is cast into ingots or billets of varying shapes and sizes, sometimes after being alloyed. These may be fabricated at the reduction plant site or shipped to another site for fabrication by the primary producer or an independent fabricator.

Fabricating may consist of: rolling the ingot into plate, sheet, and foile; forging into special shapes; drawing the ingot into rod, bar, wire, and drawn tube, extruding billets into tubings, rod, bar, and special shapes; or melting ingot and atomizing into powder, paste, and flake. Molten aluminum may also be cast, although casting proudcers use mostly secondary aluminum for this purpose.

In 1977, 6.68 million short tons of aluminum were shipped from U.S. primary and secondary producers at a value of $13.3 billion. In 1976, shipments totalled 6.37 million short tons at an estimated value of $11.22 billion.[6]

3.1.2 Location and Size

The 31 U.S. primary aluminum plants producing alumina by electrolytic reduction of alumina at the end of 1977 are listed in Table 3-1.[3, 7-14] The list includes location, company ownership, and annual capacity by the type of reduction cell in use. Table 3-1 shows that plant capacities range from 35,000 to 285,000 short tons per year and that 20 of the 31 plants exclusively or primarily use center-worked or side-worked prebake reduction cells. The horizontal Soderberg reduction cell is the second most popular choice.

Table 3-1. U. S. PRIMARY ALUMINUM PLANTS AND CAPACITIES, 1977[3, 7-14]
(short tons)

State and City	Company	Annual capacity by cell type[a,b]			
		CWPB	SWPB	VSS	HSS
Alabama					
Scottsboro	Revere Copper & Brass, Inc.		112,000		
Sheffield	Reynolds Metals Co.				202,000
Arkansas					
Arkadelphia	Reynolds Metals Co.	1,300[c]	15,700[c]		51,000[c]
Jones Mills	Reynolds Metals Co.	125,000			
Indiana					
Evansville	Aluminum Co. of America	280,000			
Kentucky					
Hawesville	National-Southwire Aluminum Co.[d]	180,000			
Sebree	The Anaconda Aluminum Co.	120,000			
Louisiana					
Chalmette	Kaiser Aluminum & Chemical Corp.				260,000
Lake Charles	Consolidated Aluminum Corp.		35,000		
Maryland					
Frederick	Eastalco Aluminum Co.		218,700[g]		

Table 3-1(continued). U. S. PRIMARY ALUMINUM PLANTS AND CAPACITIES, 1977

State and City	Company	Annual capacity by cell type[a,b]			
		CWPB	SWPB	VSS	HSS
Missouri					
New Madrid	Noranda Aluminum, Inc.	70,000			
Montana					
Columbia Falls	The Anaconda Aluminum Co.			180,000	
New York					
Massena	Aluminum Co. of America	135,000			
Massena	Reynolds Metals Co.				126,000
North Carolina					
Badin	Aluminum Co. of America	120,000			
Ohio					
Hannibal	Ormet Corp.[f]	250,000			
Oregon					
The Dalles	Martin Marietta Aluminum Inc.			90,000	
Troutdale	Reynolds Metals Co.	130,000			
Tennessee					
Alcoa	Aluminum Co. of America	210,000		60,000	

Table 3-1 (continued). U. S. PRIMARY ALUMINUM PLANTS AND CAPACITIES, 1977

State and City	Company	Annual capacity by cell type[a,b]			
		CWPB	SWPB	VSS	HSS
New Johnsonville	Consolidated Aluminum Corp.		140,000		
Texas					
Corpus Christi	Reynolds Metals Co.				115,000
Point Comfort	Aluminum Co. of America			185,000	
Rockdale	Aluminum Co. of America	285,000			
Washington					
Ferndale	Intalco Aluminum Corp.		260,000[c]		
Goldendale	Martin Marietta Aluminum Inc.			120,000	
Longview	Reynolds Metals Co.				210,000
Mead	Kaiser Aluminum & Chemical Corp.	206,000			
Tacoma	Kaiser Aluminum & Chemical Corp.				81,000
Vancouver	Aluminum Co. of America	115,000			
Wenatchee	Aluminum Co. of America	180,000			
West Virginia					
Ravenswood	Kaiser Aluminum & Chemical Corp.	163,000			
Totals		2,570,300	781,400	635,000	1,045,000
Total - all cell types			5,031,400		

Table 3-1 (continued). U.S. PRIMARY ALUMINUM PLANTS AND CAPACITIES, 1977

FOOTNOTES:

[a]The design capacity of a reduction plant is not an exact figure; rather it is an estimated rate that is often below the level at which a plant can actually produce. For this reason, some capacity figures are more realistic than others.

[b]CWPB--center-worked prebake cells, SWPB--side-worked prebake cells, VSS--vertical stud Soderberg cells, and HSS--horizontal stud Soderberg cells.

[c]Based on a total plant capacity of 68,000 short tons per year; 120 HSS cells; 37 SWPB cells; 3 CWPB cells.

[d]Jointly owned by National Aluminum Company and Southwire Company.

[f]Jointly owned by Revere Copper & Brass, Inc. and Consolidated Aluminum Corporation.

[g]50 percent interest by Howmet Corporation; 50 percent interest by Alumex, Inc.

In selecting sites for primary aluminum reduction plants, producers have had to consider several factors that affect production cost. Three principal factors are:[15]

1. Costs for shipping the major raw material, alumina, to the reduction plant site,
2. Electrical energy costs for reducing alumina to aluminum in the reduction cells; and
3. Costs for shipping aluminum to the fabricator or to the market.

Alumina consumed by U. S. primary producers is manufactured in the south central U. S., in South America, and in the West Indies and Australia.[16] Although principal fabricator sites are found in the Northeast and the Midwest and in California,[17] the availability of low cost hydroelectric power has been the overriding factor in plant site selection and has resulted in the location of plants in such areas as the Pacific Northwest and the Tennessee River Valley.[18] Moderate cost steam-generated power has attracted several plants to the Ohio River Valley, closer to the Northeast and Midwest markets.

Most of the aluminum reduction plants in the United States are located in predominantly rural areas with a sparse population density, as estimated by the total population of towns or cities within a 10-mile radius of each plant given in 1960 or later census figures.

Table 3-2 shows the distribution of plants with respect to population.

Table 3-2. DISTRIBUTION OF PLANTS BY POPULATION, 1971[19]

Number of plants	Percent capacity	Surrounding 300-mi^2 area	
		Population	Population/mi^2
13	41.1	Less than 10,000	Less than 32
9	28.7	10-25,000	32-80
2	5.7	25-50,000	80-160
7[a]	24.5	More than 50,000	More than 160

[a]One plant is surrounded by residential sections in an urban community. The other six plants in the high density areas are located on the outskirts of medium sized communities where the surrounding land is utilized for dairy farming or truck farming.

The distribution of plant capacity with respect to the type of surrounding land use is shown in Table 3-3.

3.2 FUTURE TRENDS

3.2.1 Domestic Industry and Plant Growth

Primary aluminum production in the U. S. started in 1888. Table 3-4 shows the yearly U. S. primary aluminum production since 1893, the date of the earliest recorded data. Primary aluminum production has experienced a steady, but somewhat cyclical, growth pattern. Average annual production growth rates have been: 14.5 percent for the period 1893 to 1973: 9.5 percent for the quarter century 1946 to 1971; 7.5 percent for the decade 1961 to 1971; and 6.9 percent for the decade 1963 to 1973.[20,21]

The cyclical growth pattern has given rise to periods of excess capacity. For the past few years, the industry has been in a period of low profitability because of excess capacity, but indications are that excess capacity and inventories are being eliminated. This should lead to higher prices and greater profits.[22]

Table 3-3. ESTIMATED DISTRIBUTION OF PLANTS BY ENVIRONMENT[19]

Environmental category	Number of plants	Percent of total U. S. aluminum capacity in environmental category
Urban	1	5.5
Orchard growing	4	15.4
Dairy farming	3	9.4
Truck farming	4	10.9
Cattle raising	1	1.9
Lumbering	1	5.6
General agriculture	2	2.4
Dairy plus truck farming	2	6.3
Dairy plus cattle	1	4.4
Dairy plus agriculture	1	3.0
Dairy plus lumber	1	1.7
Truck farming plus cattle	1	3.0
Truck farming plus lumber	4	11.3
Truck farming plus general agriculture	1	3.5
Lumber plus general agriculture	1	4.7
Truck farming plus cattle plus general agriculture	3	11.0
Total	31	100.0

Table 3-4. PRODUCTION OF PRIMARY ALUMINUM IN THE UNITED STATES [20]

Year	Production, $lbx10^6$	Year	Production, $lbx10^6$	Year	Production, $lbx10^6$
		1921	54.5	1951	1,673.8
		1922	73.6	1952	1,874.7
1893	0.2	1923	128.5	1953	2,504.0
1894	0.5	1924	150.6	1954	2,921.1
1895	0.5	1925	140.1	1955	3,131.4
1896	1.0	1926	147.4	1956	3,357.9
1897	2.4	1927	163.6	1957	3,295.4
1898	3.0	1928	210.5	1958	3,131.1
1899	3.3	1929	228.0	1959	3,908.2
1900	5.1	1930	229.0	1960	4,029.0
1901	5.8	1931	177.5	1961	3,807.4
1902	5.8	1932	104.9	1962	4,235.9
1903	6.6	1933	85.1	1963	4,625.1
1904	8.1	1934	74.2	1964	5,105.5
1905	10.8	1935	119.3	1965	5,509.0
1906[a]	14.1	1936	224.9	1966	5,936.7
1907	16.3	1937	292.7	1967	6,538.5
1908	10.7	1938	286.9	1968	6,510.1
1909	29.1	1939	327.1	1969	7,586.1
1910	35.4	1940	412.6	1970	7,952.3
1911	38.4	1941	618.1	1971	7,850.4
1912	41.8	1942	1,042.2	1972	8,244.8
1913	47.3	1943	1,840.4	1973	9,058.2
1914	58.0	1944	1,552.9	1974	9,806.9
1915	90.5	1945	990.1	1975	7,758.3
1916	115.1	1946	819.3	1976	8,512.8
1917	129.9	1947	1,143.5	1977	9,077.4
1918	124.7	1948	1,246.9		
1919	128.5	1949	1,206.9		
1920	138.0	1950	1,437.2		

[a]Data prior to 1907 represent fiscal years ending August 31. Production during last 4 months of 1906 totaled 5.4 million pounds.

At the end of 1972, U. S. primary capacity was 4.8 million short tons, and it has been estimated that domestic aluminum needs will require a capacity increase to 7.2 million short tons by 1980. (The capacity increase will not necessarily be all domestic.) This estimate is based on the following four assumptions:[23]

1. Growth in demand averaging 7.5 percent per year between 1971 and 1980.
2. Mill imports, secondary recovery, and primary imports at the same percentage level in 1980 as in 1972.
3. Stockpile sales of 77,000 tons per year in 1980, based on the current General Services Administration disposal schedule.
4. Industry operating ratio of 95 percent.

The anticipated increase represents an average annual capacity growth rate of 5.2 percent for the period 1972 to 1980. Growth in consumption of aluminum has generally been quoted at 6 to 8 percent over the period 1972 to 1980.[24] The fact that capacity growth is forecast to be less than consumption growth reflects the present excess capacity. Applying a 5.2 percent growth rate to capacity for the period 1980 to 1985 results in a capacity increase to 9.2 million short tons by 1985. Applying a 7 percent growth rate results in a capacity increase to 10.1 million short tons by 1985.

The EPA standards of performance for new primary aluminum plants are not expected to have an adverse impact upon future growth in the domestic primary aluminum industry.[25]

Table 3-5 shows the gradual increase in the average capacity of primary aluminum plants in the U.S. since 1960.[3,4,26] Although the average capacity stood at 158,000 short tons per year in 1973, the seven plants built from 1970 to 1973 have capacities of 35,000; 70,000; 87,000; 112,000; 120,000; 120,000; and 180,000 short tons per year. The average capacity for these seven plants is thus only 104,000 short tons per year.

Table 3-5. GROWTH IN PRIMARY ALUMINUM PLANT AVERAGE CAPACITY IN U.S.[3,4,26]

Year	Number of plants	Annual capacity, short tons x 10^3/year	
		Total	Average
1960	22	2468.8	112.2
1967	24	3321.0	138.4
1973	31	4893.0	157.8

As for future changes in average plant size, no new plants are known to be under construction as of the end of 1974. A lead time of about 3 years is needed for construction of a new plant.[23] Hence, if the anticipated growth rate is to be met by increased U.S. capacity, it seems likely that much of the immediate capacity increases will probably be in the form of expansions, thus further increasing the average plant capacity.

3.2.2 Plant Location and Cell Type

No pronounced geographical shifts in the location of primary aluminum plants have occurred since 1966. Plants continue to be located mainly near sources of low-cost power in the Pacific Northwest and the Tennessee and Ohio River Valleys; however, most of the available hydroelectric power in the U.S. has now been harnessed. Greater use of nuclear and nonnuclear steam-generated power could result in any future U.S. primary aluminum plants being located closer to the marketplace.

Table 3-6, which summarizes U. S. trends in cell design since World War II, shows that the primary aluminum industry favored adoption of Soderberg cells during the 1950s but that the present trend is toward prebake cells. This trend is expected to continue since new prebake cells should be able to meet EPA standards of performance for new primary aluminum plants (see Section 1.3) more easily and less expensively than new Soderberg plants.[28]

3.2.3 New Producers and Technology

It appears that unless government regulation intervenes, aluminum producers may become part of multi-material industries by the mid-1980s.[29] Aluminum would most likely become allied with two of its strongest competitors, steel and plastic. One steel company has already become a primary aluminum producer. Also, some aluminum fabricators have accomplished or are considering backward integration into primary aluminum. Furthermore, there appears to be a trend for foreign producers to establish primary plants in the U. S. to gain easy access to U. S. markets.[30]

Table 3-6. U. S. TRENDS IN ADOPTION OF CELL TYPES[27]

	Prebake plants			Soderberg plants					
				Horizontal stud			Vertical stud		
	Installations			Installations			Installations		
	New	Cumulative	Expansions	New	Cumulative	Expansions	New	Cumulative	Expansions
pre - 1946	-	10	-	-	2	-	-	-	-
1946	-3[a]	7	-	-	2	-	-	-	-
1947 - 1950	1[b]	8	-	-	2	-	-	-	-
1951 - 1958	4	12	2	3	5	2	3	3	-
1959 - 1965	1	13	-	1	6	-	-	3	-
1966 - 1969	1	14	1	-	6	2	-	3	2
1970 - 1972	6	20	2[c]	-	6	-	1	4	-

[a]Government-owned (DPC) plants deactivated.

[b]One DPC plant reactivated under private ownership.

[c]Estimated.

From its inception over 80 years ago, the U. S. primary aluminum industry has relied upon the Bayer process for refining bauxite ore and the Hall-Heroult process for electrolytically reducing alumina to aluminum. The Bayer process discharges air and water pollutants; the Hall process discharges air (notably fluoride) and sometimes water pollutants. The Hall process uses huge amounts of electricity and requires huge capital investments. The Bayer-Hall processes have made the U. S. largely dependent on foreign sources of bauxite ore. In spite of these disadvantages, technology has not changed because alternate processes have shown higher production costs than the Bayer-Hall processes and because bauxite ore has been in adequate supply. Improvements in the Bayer-Hall processes have made it more difficult for alternate processes to compete economically. However, it now appears that it may not be long before other processes can compete, and the day will come when available bauxite will no longer support the world's demand for aluminum.

Efforts to find alternate processes have generally fallen into three classes:

1. Production of alumina from non-bauxite ores.
2. Direct reduction of bauxite or non-bauxite ore to aluminum.
3. Conversion of alumina to aluminum by means other than electrolytic reduction in a cryolite bath.

Non-bauxite ores that have been considered for commercial development in the U. S. include: high-alumina clay; dawsonite; aluminous shales; alunite; aluminum phosphate rock; igneous rock, notably anorthosite; and saprolite- and sillimanite-group minerals.[31] The Poles are presently

using high-alumina clay commercially and the Russians are using alunite and an alumina-containing igneous rock known as nepheline syenite. It appears that high-alumina clay is the most likely candidate for commercial development in the U. S.[31]

U. S. and foreign producers have experimented with various methods of directly reducing bauxite or non-bauxite ore to aluminum. Applied Aluminum Research Corp.* has announced that it is developing the Toth Process by which non-bauxitic ores are directly reduced to aluminum. The process involves conversion of the ore to aluminum chloride, purification, reaction of aluminum chloride with manganese to produce aluminum and manganese chloride, and regeneration of the manganese.[32]

Alcoa has announced the development of a process involving the conversion of conventionally made alumina to aluminum trichloride and subsequent electrolytic reduction to yield aluminum metal and recyclable chlorine.[32] This method, known as the Alcoa Smelting Process, reduces electric power requirements by 30 percent.

3.3 PRICE STATISTICS

Table 3-7 gives average list prices of virgin primary aluminum ingot for selected years from 1930 to 1969[33,34] and closing New York cash prices for selected dates from August 1970 to February 1975.[1,35]

---

*Mention of specific companies or products in this document does not constitute endorsement by the U.S. Environmental Protection Agency.

Table 3-7. PRIMARY ALUMINUM INGOT PRICE HISTORY
(cents per pound)

Year	Average List Price	Date	Closing New York Cash Price
1930	23.8	8/13/70	29.0
1932	23.3	8/13/71	29.0
1937	20.1	10/18/72	25.0
1941	16.5	12/31/72	25.0
1944	15.0	3/25/73	25.0
1947	15.0	5/29/73	25.0
1950	17.7	8/1/73	25.0
1951	19.0	10/18/73	25.0
1953	20.9	12/31/73	29.0
1957	27.5	3/25/74	29.0
1959	26.9	5/29/74	31.5
1961	25.5	7/31/74	33.5
1964	23.7	8/1/74	36.0
1967	25.0	10/74	39.0
1968	25.6	12/74	39.0
1969	27.2	2/25/75	39.0

The table shows that the price increased dramatically from October 1973 to October 1974, and has levelled out since then. It is also obvious that increased production costs are being passed on to the consumer.

3.4 REFERENCES FOR SECTION 3

1. Survey of Current Business. Bureau of Economic Analysis, U. S. Department of Commerce. Washington, D. C. 55:S-33, January 1975.

2. Aluminum Statistical Review 1977. The Aluminum Association. New York, N. Y. p. 54.

3. Reference 2, above, pp. 34-35.

4. Reference 2, above, p. 36.

5. Reference 2, above, p. 16.

6. U.S. Industrial Outlook. Domestic and International Business Administration, U.S. Department of Commerce, Washington, D.C. 1978 edition. p. 65.

7. Air Pollution Control in the Primary Aluminum Industry. New York, N.Y. Singmaster and Brever. Prepared for Office of Air Programs, U.S. Environmental Protection Agency, Research Triangle Park, N.C., under Contract Number CPA 70-21. July 23, 1973. p. 2-22, 2-23.

8. Letter from Dr. P. R. Atkins, Aluminum Company of America, Pittsburgh, Pa. to D.R. Goodwin, Emission Standards and Engineering Division, OAQPS, Environmental Protection Agency, Research Triangle Park, N.C., dated June 20, 1974.

9. Personal communication from Dr. P. A. Atkins, Aluminum Company of America, Pittsburgh, Pa. to B. A. Varner, Emission Standards and Engineering Division, OAQPS, Environmental Protection Agency, Research Triangle Park, N.C., June 25, 1974.

10. Letter from Dr. B. S. Hulcher, Reynolds Metals Company, Richmond, Va. to D. R. Goodwin, Emission Standards and Engineering Division, OAQPS, Environmental Protection Agency, Research Triangle Park, N.C., dated June 28, 1974.

11. Letter from K. Cyr, Anaconda Aluminum Company, Louisville, Ky. to D. R. Goodwin, Emission Standards and Engineering Division, OAQPS, Environmental Protection Agency, Research Triangle Park, N.C., dated June 21, 1974.

12. Letter from J. L. Loyer, Howmet Corporation, Greenwich, Conn. to D.R. Goodwin, Emission Standards and Engineering Division, OAQPS, Environmental Protection Agency, Research Triangle Park, N.C., dated October 31, 1974.

13. Letter from W. F. Boyer, Jr., Consolidated Aluminum Corporation, Lake Charles, La. to B. A. Varner, Emission Standards and Engineering Division, OAQPS, Environmental Protection Agency, Research Triangle Park, N.C., dated June 25, 1974.

14. Letter from J. L. Byrne, Martin Marietta Aluminum, to D.R. Goodwin, Emission Standards and Engineering Division, OAQPS, Environmental Protection Agency, Research Triangle Park, N.C., dated October 10, 1974.

15. Farin, P. and G. G. Reibsamen. Aluminum, Profile of an Industry. New York, N.Y., Metals Week, McGraw-Hill Inc., 1969. p. 153.

16. Reference 15, above, p. 25.

17. Reference 2, above, pp. 39-41.

18. Reference 15, above, p. 148.

19. Reference 7, above, p. 2-28, 2-29.

20. Reference 2, above, pp. 32-33.

21. Aluminum Statistical Review 1971. The Aluminum Association. New York, N.Y. p. 30.

22. Background Information for Standards of Performance: Primary Aluminum Industry. Volume 1: Proposed Standards. Emission Standards and Engineering Division, OAQPS, Environmental Protection Agency, Research Triangle Park, N.C. October 1974. p. 64.

23. Reference 22, above, p. 78.

24. Hamilton, W. F., Trip Report: Meetings Held in Washington, D. C. and New York City on March 28 - 29, 1973 to discuss Aluminum Industry. Strategies and Air Standards Division, OAQPS, OAWP, Environmental Protection Agency, Research Triangle Park, N. C.

25. Reference 22, above, p. 93.

26. Aluminum Statistical Review 1970. The Aluminum Association. New York, N. Y. pp. 8, 16.

27. Reference 7, above, p. 3-17.

28. Reference 22, above, pp. 74-76.

29. Reference 15, above, p. 164.

30. Reference 15, above, p. 163.

31. Reference 15, above, pp. 154-156.

32. New Processes Promise Lower Cost Aluminum. Chemical and Engineering News. 51(9):11-12, February 26, 1973.

33. Minerals Yearbook. Bureau of Mines, U.S. Department of the Interior. Washington, D.C.

34. Metal Statistics, The Purchasing Guide of the Metal Industries. The American Metal Market Company. New York, N.Y.

35. Cash Prices. The Wall Street Journal. August 16, 1971; October 19, 1973; January 2, 1974; March 26, 1974; May 30, 1974; August 2, 1974; February 26, 1975.

4. PROCESS DESCRIPTION

4.1 PRIMARY ALUMINUM REDUCTION [1-5]

All primary aluminum in the United States is produced by electrolytic reduction of alumina (Al_2O_3)--the Hall-Heroult process. Alumina, an intermediate product, is produced by the Bayer process from bauxite, a naturally occurring ore of hydrous aluminum oxides and hydroxides containing 45 to 55 percent Al_2O_3. The production of alumina and the electrolytic reduction of alumina to aluminum are seldom accomplished at the same geographical location.

Alumina is shipped to the reduction plant where it is reduced to aluminum and oxygen by direct electric current (Figure 4-1). This reduction is carried out in shallow rectangular cells (pots) made of carbon-lined steel with carbon blocks that are suspended above and extend down into the pot (Figure 4-2). The pots and carbon blocks serve as cathodes and anodes, respectively, for the electrolytical process.

Cryolite, a double fluoride salt of sodium and aluminum (Na_3AlF_6), serves as an electrolyte and a solvent for alumina. Alumina is added to and dissolves in the molten cryolite bath. The cells are heated and operated between 950° and $1,000^{\circ}C$ with heat that results from resistance between the electrodes. During the reduction process, the aluminum is deposited at the cathode where, because of its heavier weight (2.3 g/cm^3 versus 2.1 g/cm^3), it

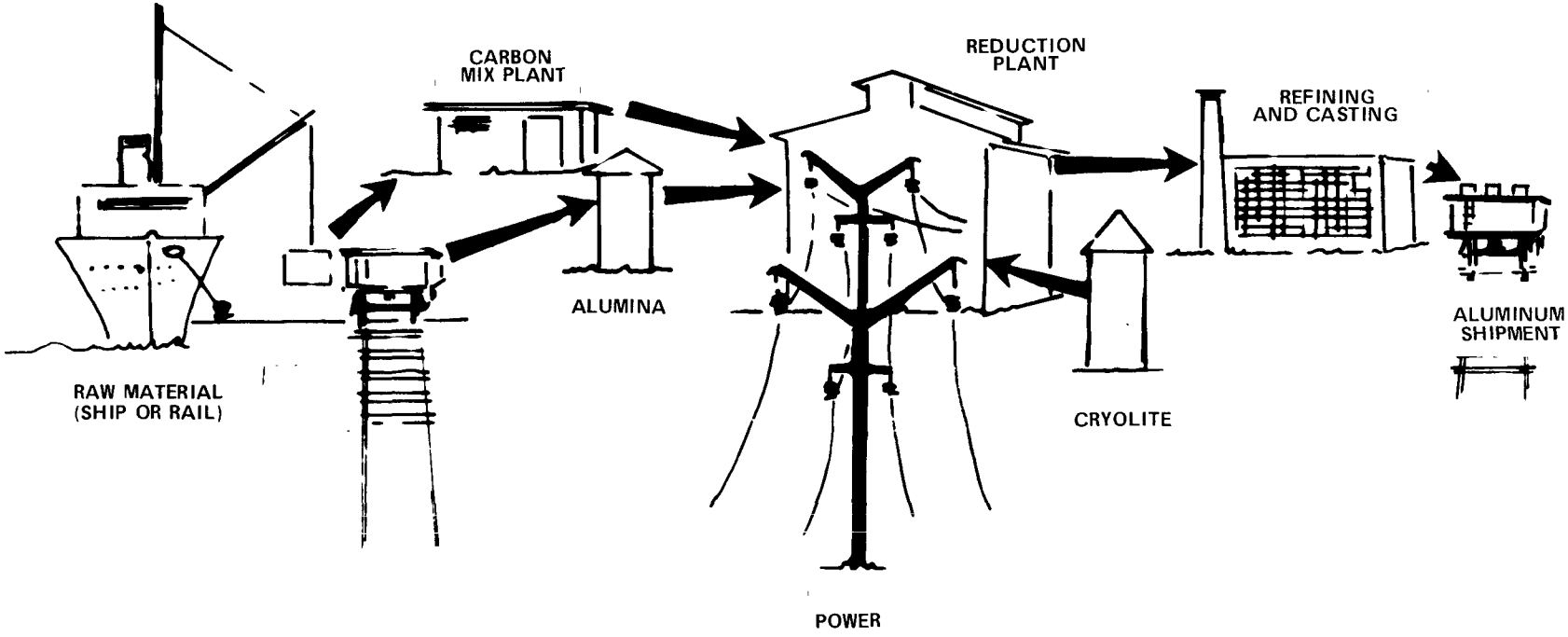

Figure 4-1. Aluminum reduction process.

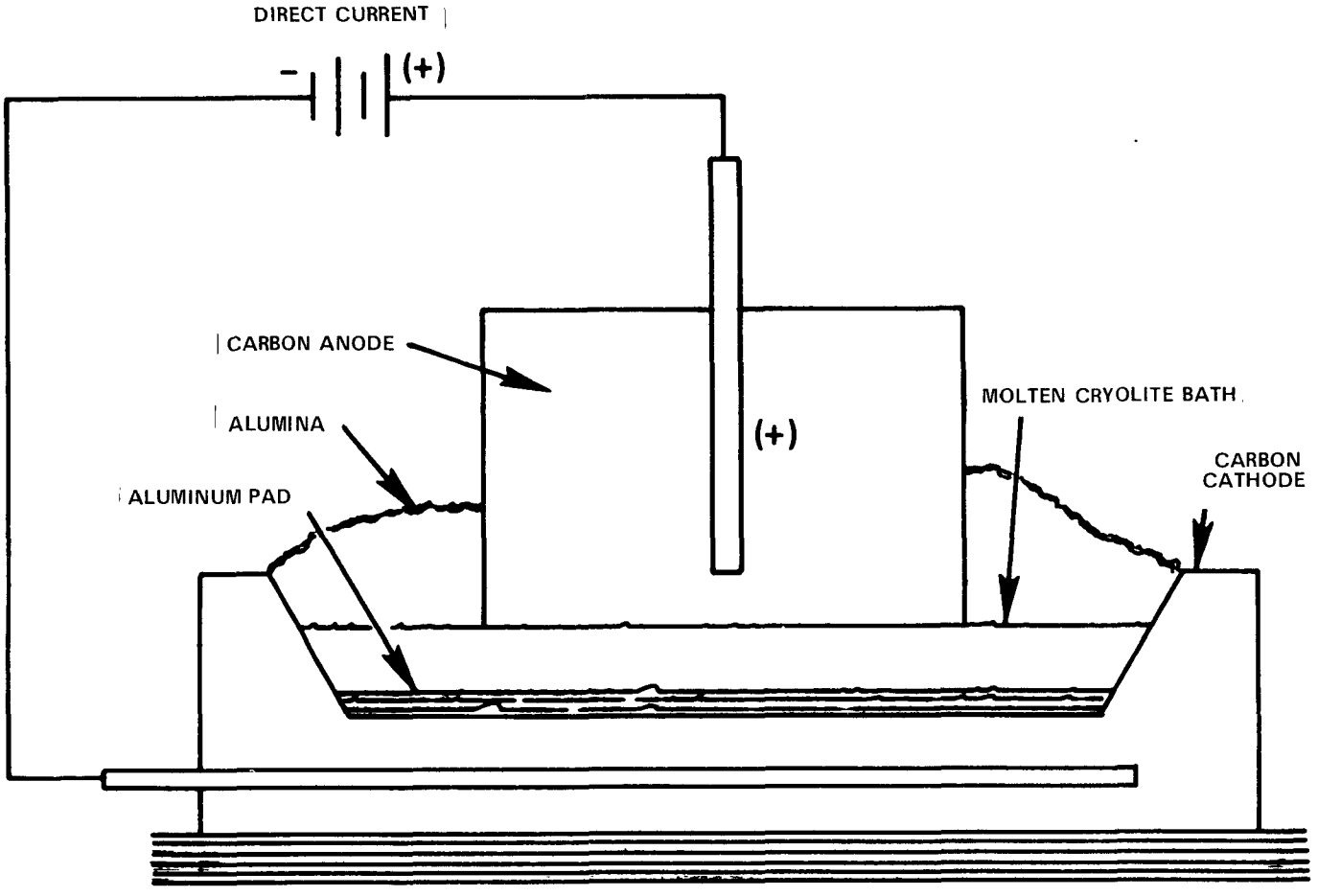

Figure 4-2. Aluminum reduction cell diagram.

remains as a molten metal layer underneath the cryolite. The cryolite bath thus also protects the aluminum from the atmosphere. The byproduct oxygen migrates to and combines with the consumable carbon anode to form carbon dioxide and carbon monoxide, which continually evolve from the cell.

Alumina and cryolite are periodically added to the bath to replenish material that is removed or consumed in normal operation. The weight ratio of sodium fluoride (NaF) to aluminum fluoride (AlF_3) in cryolite is 1.50. However, it has been found that adding excess AlF_3 to reduce the bath ratio to 1.30 to 1.45[6] will increase cell current efficiency and lower the bath melting point permitting lower operating temperatures. Fluorspar, or calcium fluoride, may also be added to lower the bath melting point.

Periodically, the molten aluminum is siphoned or "tapped" from beneath the cryolite bath, moved in the molten state to holding furnaces in the casting area, and fluxed to remove trace impurities. The product aluminum is later tapped from the holding furnaces and cast into ingots or billets to await further processing or shipped molten in insulated ladles.

The reaction:

$$Al_2O_3 + 1\ 1/2\ C \rightarrow 2Al + 1\ 1/2\ CO_2 \qquad (4.1)$$

absorbs 261.9 kcal per gram mole of alumina reacted at 1000°F, which is equivalent to 2.56 kilowatt-hours (kwh) of energy per pound of aluminum produced.[7] In actual practice, however, some energy is used to bring the reactants (including the carbon anode) up to temperature

and is lost in the byproduct gas stream, with the tapped aluminum, and to the building. The latter occurs principally through the low temperature heat leak provided by the molten aluminum layer beneath the cryolite bath. A small portion of the molten aluminum mixes with the bath and is carried to the anode where it is oxidized back to alumina, reducing some of the carbon dioxide to carbon monoxide. (Much of the hot carbon monoxide is oxidized back to carbon dioxide upon contacting air.) This reduction absorbs additional energy, and practically the total cell energy requirement is from 6 to 9 kwh per pound of aluminum produced. Furthermore, although the stoichiometric carbon requirement by equation (4.1) is 0.33 pound per pound of aluminum produced, the reduction of carbon dioxide to carbon monoxide increases the carbon requirement to about 0.50 pound per pound of aluminum produced.[7,8]

A typical late design cell may operate at 100,000 amperes and 4.5 volts (450 kilowatts), producing 1540 pounds of aluminum per day for an energy consumption of approximately 7 kwh per pound of aluminum produced.[9]

A large number of cells are linked together electrically in series to form a potline, the basic production unit of the reduction plant. The potline may be housed in one or two long ventilated buildings called potrooms. A typical plan view of a potroom in schematic form is shown in Figure 4-3. A typical elevation might be as shown in Figure 4-4. The pots may be arranged end to end or side by side. The roof "monitor" or ventilator shown in Figure 4-4 usually

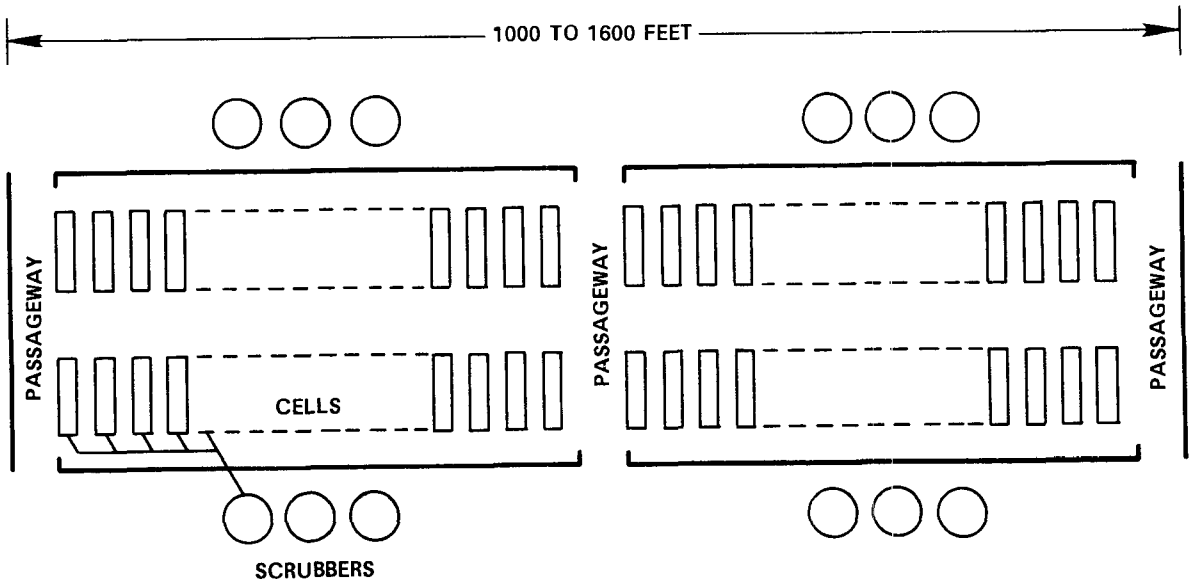

Figure 4-3. Typical plan view of potroom.[10]

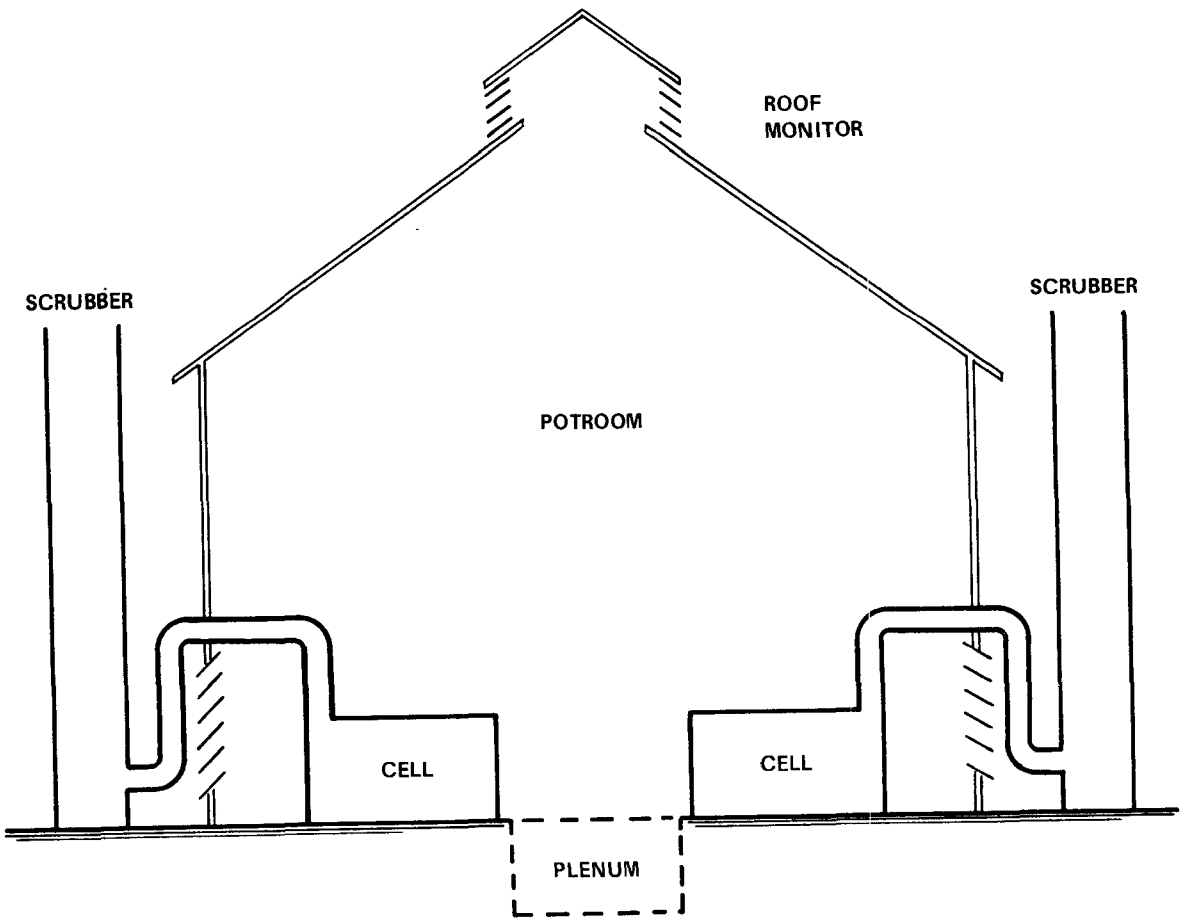

Figure 4-4. Typical elevation view of potroom.[11]

runs the length of the building and serves the important function of releasing the heat lost from the pots to the building air, thus maintaining workable conditions around the pots. Outside air may be introduced to the potroom through side vents, or forced through a central floor plenum, or both.

The "process" of primary aluminum reduction is essentially one of materials handling. It can be shown schematically as a flow diagram such as Figure 4-5. The true difference in the various process modifications used by the industry lies in the type of reduction cell used. Three types of reduction cells or pots are used in the United States: prebake (PB), horizontal stud Soderberg (HSS), and vertical stud Soderberg (VSS). Both Soderberg cells employ continuously formed consumable carbon anodes where the anode paste is baked by the energy of the reduction cell itself. The prebake cell, as indicated by its name, employs a replaceable, consumable carbon anode, formed by baking in a separate facility called an anode bake plant, prior to its use in the cell.

The preparation of anode materials is usually an ancillary operation at the reduction plant site. Figure 4-6 is a typical flow diagram for the preparation of prebake anodes. In the carbon plant, or "green mill", coke is crushed and sized; cleaned, returned anode butts are crushed; and both are mixed together with pitch and molded to form self-supporting green anode blocks. Figure 4-6 shows solid coal tar pitch moving to a crusher. The pitch may not be coal tar, and it may be received and handled as a liquid. The green anode blocks are fired and baked in a pit baking furnace, or ring furnace. Subsequently, a steel or iron electrode is bonded into a preformed hole

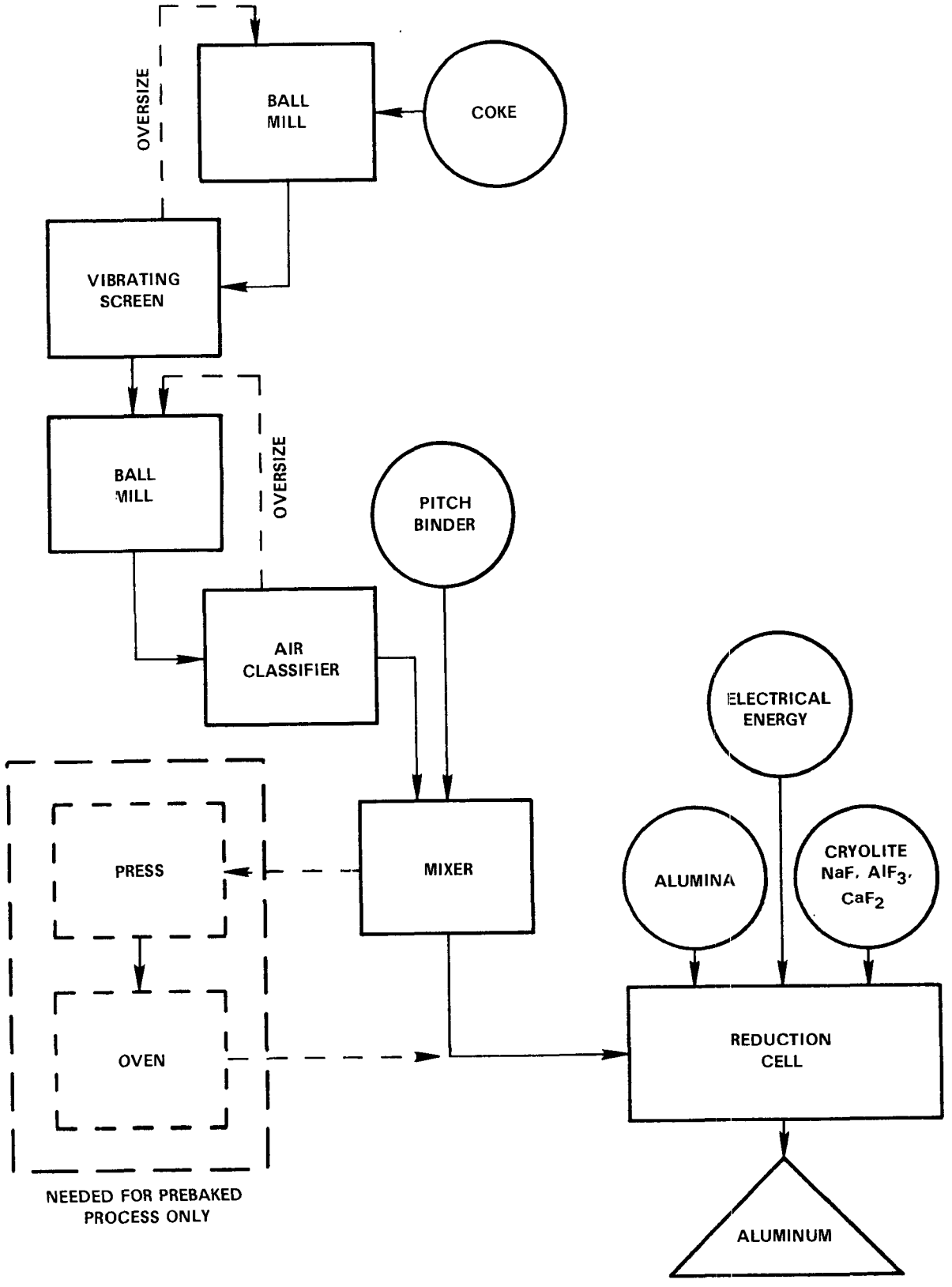

Figure 4-5. General flow diagram for primary aluminum reduction.[12]

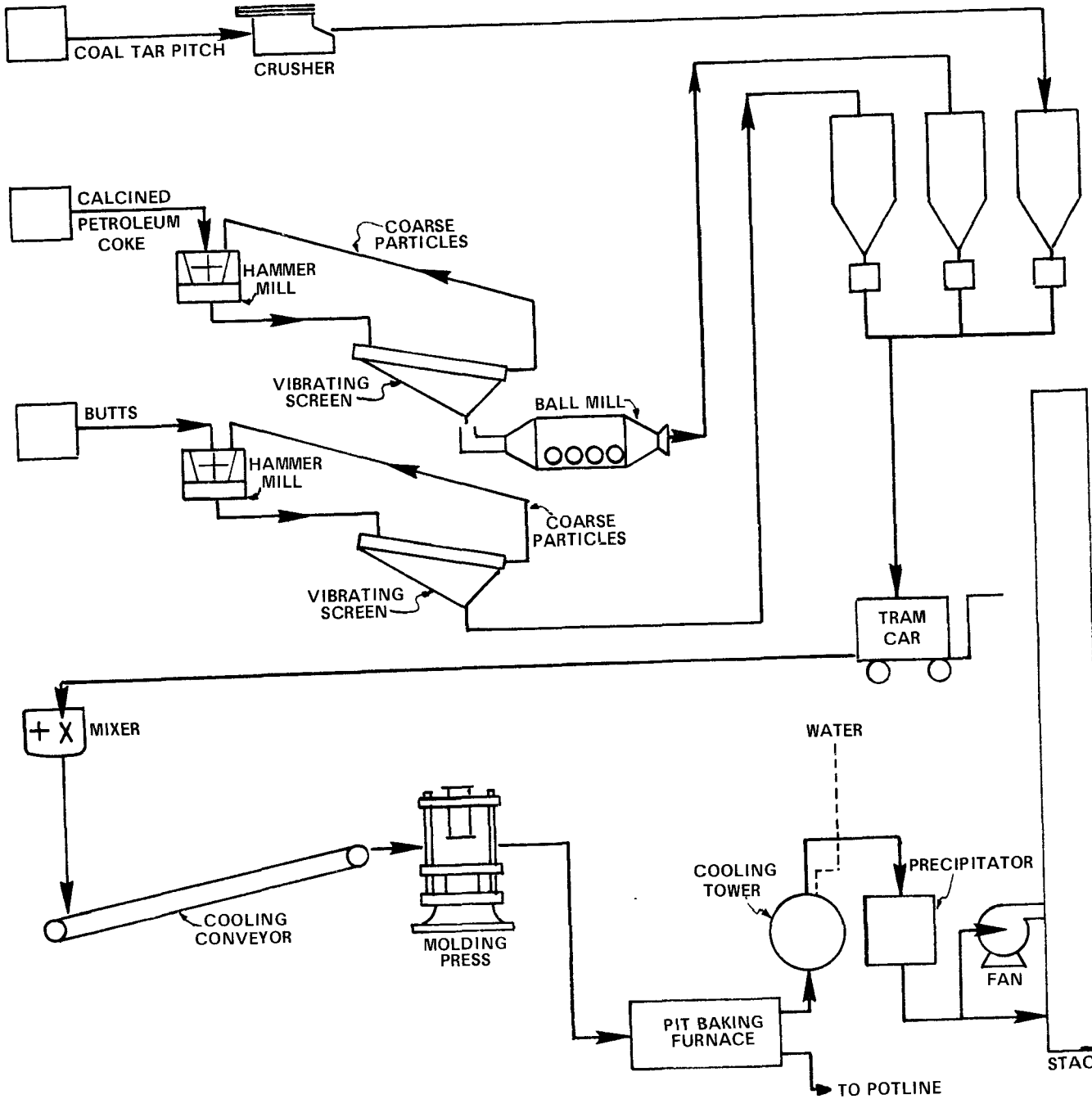

Figure 4-6. Flow diagram for preparation of prebake anodes.[13]

in each block. The electrode serves as an electrical connector and holds the anode in place in the bath. The ring furnace operation comprises the anode bake plant. A second type of furnace, the tunnel kiln, has also been developed for baking anodes.

The preparation of Soderberg anode material is similar to that for prebake cells, except that the pitch is always liquid, the anode paste is not molded and baked prior to cell usage, and no anode material is returned from the cells to the carbon plant.

Since the potrooms housing the reduction cells and the prebake anode bake plant are the facilities affected by the standards of performance for new primary aluminum plants and attendant State plans for controlling existing plants, the different cell types and the bake plant merit further consideration. Process items specific to each are discussed in the following sections.

4.2 PREBAKE PROCESS

Prebake cells use a number of anodes suspended in the electrolyte, in essence the original design of the Hall-Heroult process. The anodes are press-formed from a carbon paste and are baked in a ring furnace or tunnel kiln.

4.2.1 Anode Bake Plant

4.2.1.1 Ring Furnace[14,15]--The ring furnace consists of compartmentalized, sunken, brick baking pits with surrounding interconnecting flues. Green anodes are packed into the pits, with a blanket of coke or anthracite filling the space between the anode blocks and the walls

of the pits. A 10- to 12-inch blanket of calcined petroleum coke fills the top of each pit above the top layer of anodes. The blanket helps to prevent oxidation of the carbon anodes.

The pits are fired with natural gas-fired or oil-fired manifolded burners for a period of about 40 to 48 hours. The flue system of the furnace is arranged so that hot gas from the pits being fired is drawn through the next section of pits to gradually preheat the next batch of anodes before they are fired, in turn, when the manifold is progressively moved. Air for combustion is drawn through the sections previously under fire, cooling them down. The anodes are fired to approximately 1,200^{o}C, and the cycle of placing green anodes, preheating, firing, cooling, and removal is approximately 28 days.

Firing of sections proceeds down one side of the rectangular furnace building and back the other in a "ring" pattern. Proceeding around the building, the pattern of sections cooling down, sections under fire, sections heating up, and empty sections is repeated several times.

Ring furnaces use outside flues under draft, and since the flue walls are of dry-type construction, most volatile materials released from the anodes during the baking cycle (principally hydrocarbons from the pitch binder) are drawn, with the combustion products of the firing, into the flue gases where they are burned at about 1300°C.[15]

Flue gases may be passed through fluoride scrubbers and perhaps electrostatic precipitators to reduce temperature and scrub or co-precipitate out a portion of the hydrocarbons before exhausting to a stack.

The furnace buildings spanning the lines of baking pits are usually open at the side and ventilated through gravity roof monitors without emission controls.

The baked anodes are stripped from the furnace pits by means of an overhead crane on which pneumatic systems for loading and removing the coke pit packing may also be mounted. The packing may subsequently become part of other green anodes in the carbon plant.[15]

4.2.1.2 Tunnel Kiln[16]--A second type of furnace, the tunnel kiln, has been developed for application in the baking of anodes. The kiln is an indirect-fired chamber in which a controlled atmosphere is maintained to prevent oxidation of the carbon anodes. Green anode blocks are loaded on transporter units that enter the kiln through an air lock, pass successively through a preheating zone, a firing zone, and a cooling zone, and leave the kiln through a second air lock. The refractory beds of the cars are sealed mechanically to the kiln walls to form the muffle chamber, and yet permit movement of the units through the kiln.

The muffle chamber is externally heated by combustion gases, and the products of combustion are discharged through an independent stack system.

Effluent gases from the baking anodes may be introduced into the fire box so as to recover the fuel value of hydrocarbons and reduce the quantity of unburned hydrocarbon to approximately 1 percent of that coming from a ring furnace. Further reduction of solid and gaseous emissions may be achieved by the use of heat exchangers, scrubbers, and electrostatic precipitators.

Although the tunnel kiln presents mechanical problems in design and operation, it is reported to have several appreciable advantages over the ring type of furnace:

1. Baking cycle from green to finished anode is much shorter.
2. Anode baking is more uniform.
3. Space requirements for equal capacity furnaces is less.
4. Smaller gas volumes are handled through the furnace emission control system.

The successful development of the tunnel kiln in this application is recent, and to date only one installation is in normal operation.

Baked anodes are delivered to air blast cleaning machines utilizing fine coke as blasting grit. Fins, scrafs, and adherent packing is removed by this treatment, and the baked anodes are then transferred to the rodding room where the electrodes are attached.

4.2.2 Reduction Cells[17,18]

Figure 4-7 shows a sectional view of a typical prebake (PB) reduction cell with a hood for collection of cell emissions.

Prebake cells use up to 26 anode assemblies per cell, which are attached to the anode bus on the cell superstructure by means of clamps. The anode bus is attached to the steel superstructure by anode jacks that may be driven by an air motor or by other means, giving a travel of from 10 to 14 inches and permitting the raising or lowering of all 26 assemblies in the cell simultaneously. Each of the 26 assemblies may also be raised or lowered individually by means of an overhead crane after the anode clamp is loosened.

The anodes are lowered as they are consumed, typically at a rate of about 1 inch per day.[18] When the anodes are completely spent, they are removed and replaced on a rotating basis, usually a pair at a time. The total operating time before replacement is dependent on the size of the anode blocks and the amperage of the potline.

The anode assemblies are usually installed in two rows extending the length of the cell. In some arrangements the two rows are closely spaced in the center of the cell, providing a working area on each side of the cell between the cell side lining and the anodes (side-worked). In other cases, the rows are separated and placed closer to the cell side lining, providing the working area in the center of the cell between the rows of anodes (center-worked).

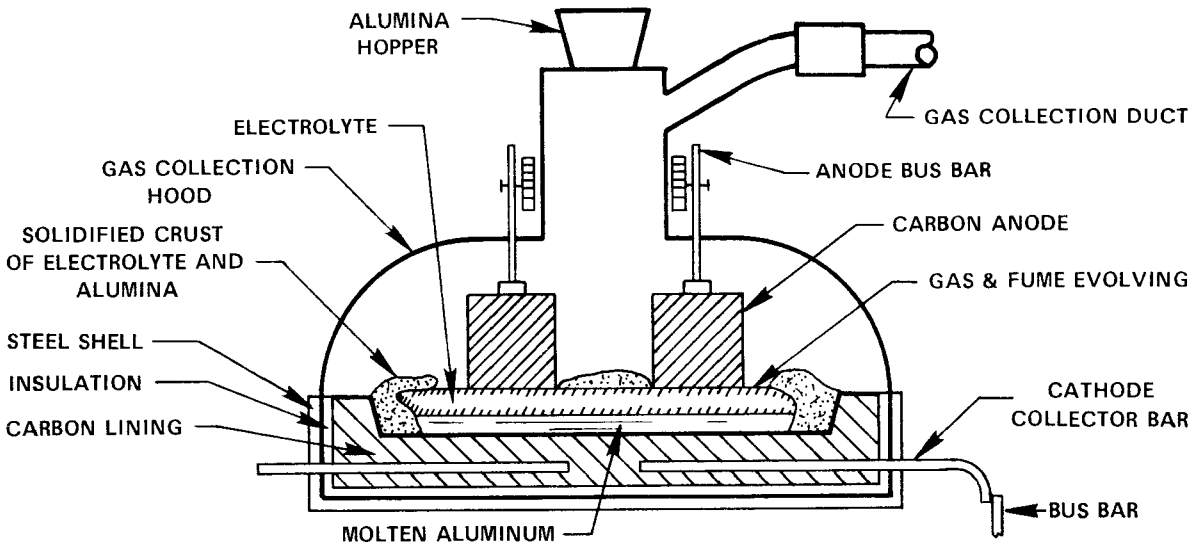

Figure 4-7. Details of prebake reduction cell.[18]

The general trend in prebake anode design has been toward larger anode blocks, obtaining greater effective anode/cathode surface ratios and lower current densities at the anodes for equivalent power inputs.

4.3 SODERBERG CELLS[18,19,20]

There are two types of Soderberg cells, each having a single large carbon anode, but differing in the method of anode bus connection to the anode mass. In both the vertical stud Soderberg (VSS) and the horizontal stud Soderberg (HSS), a green anode paste is fed periodically into the open top of a rectangular steel compartment and baked by the heat of the cell to a solid coherent mass as the material moves down the casing.

In both types of Soderberg cells, the in-place baking of the anode paste results in the release of hydrocarbon fumes and volatiles derived from the pitch binder of the paste mixture. These products are a component of the Soderberg cell emissions and are essentially absent from those of the prebake cells. If not removed from the gas stream, the pitch components will condense in and plug subsequent doctwork and emission control devices.

Although the Soderberg cells required more electrical energy to produce a given weight of metallic aluminum, and create problems in emission control, they were acclaimed initially because they did away with the need for a separate anode manufacturing facility.

Partially because the volatile pitch components can condense in the ductwork and the control device, and partially because of the problems of simultaneously controlling fluorides and organic emissions, any economic advantage of the Soderberg systems is diminishing and the trend appears to be toward the prebake cell.

Furthermore, although prebake cells may be center-worked or side-worked, the use of a single large carbon anode requires that both types of Soderberg cells be side-worked. As will be discussed in Section 6.1, center-worked cells lend themselves to more efficient hooding and hence more efficient emission control.

4.3.1 Vertical Stud Reduction Cells

Figure 4-8 shows a sectional view of a typical vertical stud Soderberg reduction cell. The anode casing is stationary, the electrical connection from the studs to the bus bar is rigid, and

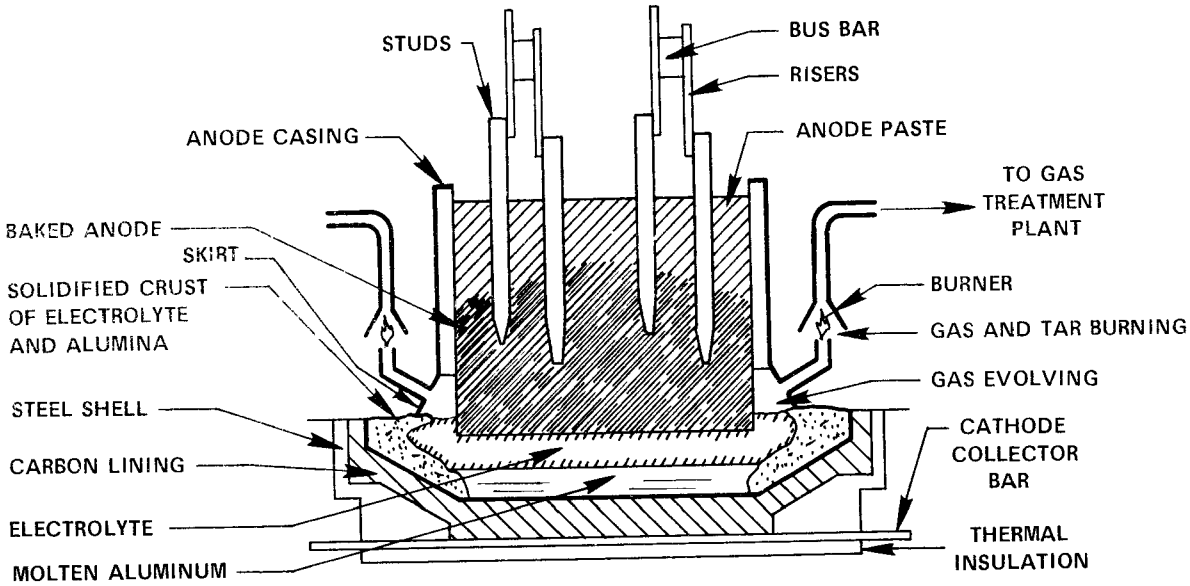

Figure 4-8. Details of vertical stud Soderberg reduction cell.[18]

the steel current-carrying studs project vertically through the unbaked paste portion and into the baked portion of the anode. As the anode is consumed and moves down the casing, the bottommost studs are periodically extracted before they become exposed to the bath at the bottom of the anode.

The stationary anode casing and the projection of the studs through the top of the anode allow the installation of a gas collection skirt between the anode casing and the bath surface. The gases are ducted to integral gas burners where the hydrocarbon tars are burned to gaseous fractions that do not interfere with the operation of subsequent pollutant removal equipment. Maintenance of the skirt system is a problem, however. Irregularities in cell operation can extinguish the burner flame, and the skirts may melt or be deformed by the heat. Pilot lights can help ensure that the burners stay lighted.

4.3.2 Horizontal Stud Reduction Cells

Figure 4-9 shows a sectional view of a typical horizontal stud Soderberg reduction cell. The anode, suspended over the pot, is contained in a rectangular compartment made of aluminum sheeting and perforated steel channels that is raised or lowered by means of powered jacks. The entire anode assembly is moved downward as the working surface is oxidized. Studs are inserted into the anode through 3-inch perforations in the steel channels at a point about 3 feet or so above the molten bath where the paste is still fairly soft. Electrical contact is through flexible connectors between the studs and the bus bar. As the anode is moved downward, the paste bakes solid and grips the stud. When the bottom channel reaches the bath, the flexible connectors are moved to a higher row of studs, the studs in the bottom row are pulled out, and the bottom channels are removed.

The construction of the HSS cell prevents the installation of an integral gas collection device such as a skirt, since the anode casing is formed by removable channels supporting the horizontal stud electrodes, and these channels are periodically changed as the anode moves downward and is consumed. Hooding is restricted to canopy suspension, resulting in so much air dilution that self-supporting combustion in burners is not possible. The hydrocarbon tars thus condense in the ductwork and tend to plug pollutant removal equipment.

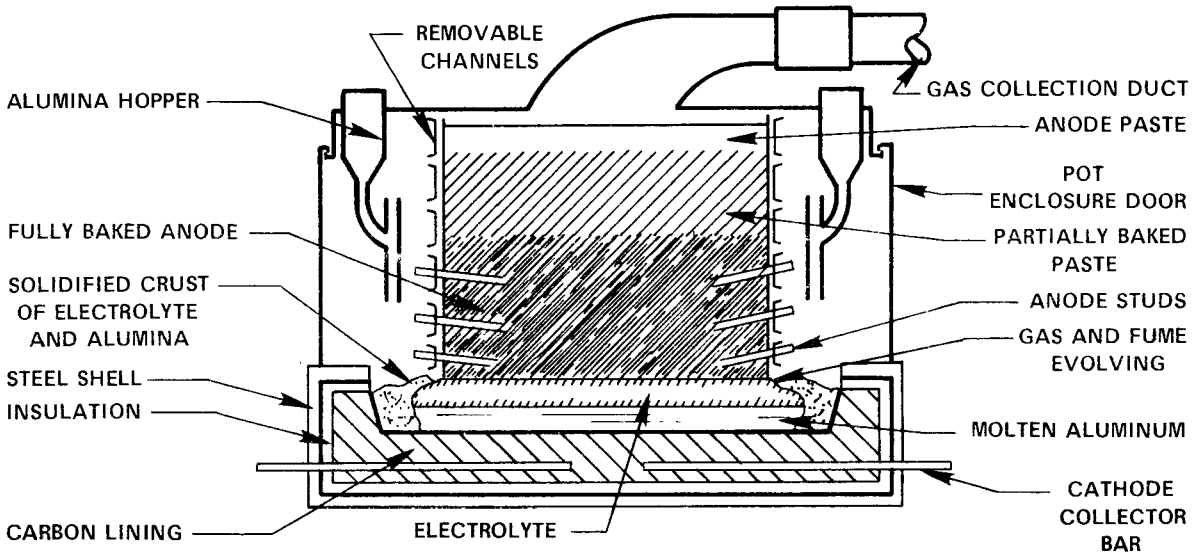

Figure 4-9. Details of horizontal stud Soderberg reduction cell.[18]

4.4 REFERENCES FOR SECTION 4

1. Air Pollution Control in the Primary Aluminum Industry. Singmaster and Breyer, New York, N.Y. Prepared for Office of Air Programs, Environmental Protection Agency, Research Triangle Park, N.C., under Contract Number CPA 70-21. July 23, 1973. p. 3-1, 3-2, 3-6 to 3-10, 3-16, 3-18 to 3-23.

2. Background Information for Establishment of National Standards of Performance for New Sources. Primary Aluminum Industry. Environmental Engineering, Gainesville, Florida. Prepared for Air Pollution Control Office, Environmental Protection Agency, Durham, N.C., under Contract Number CPA 70-142, Task Order No. 2. (Draft Copy dated March 15, 1971). p. 2-1 to 2-8.

3. Shreve, R. N. Chemical Process Industries. 3rd Ed. New York, N.Y., McGraw-Hill Book Company, 1967. pp. 246 - 250.

4. Robinson, J. M. et al. Engineering and Cost Effectiveness Study of Fluoride Emissions Control. Resources Research, Inc. and TRW Systems Group, McLean, Va. Prepared for Office of Air Programs, Environmental Protection Agency, Durham, N.C., under Contract Number EHSD 71-14. January 1972. p. 3-13, 3-15, 3-17.

5. Background Information for Standards of Performance: Primary Aluminum Industry. Volume 1: Proposed Standards. Emission Standards and Engineering Division, OAQPS, Environmental Protection Agency, Research Triangle Park, N.C., October 1974.

6. Reference 1, above, p. 3-1, 3-2.

7. Reference 3, above, p. 246.

8. Reference 4, above, p. 3-17.

9. Reference 1, above, p. 3-6, 3-8.

10. Reference 2, above, p. 2-5.

11. Reference 2, above, p. 2-6.

12. Reference 2, above, p. 2-8.

13. Reference 1, above, p. 3-20. (Modified)

14. Reference 1, above, p. 3-21.

15. Varner, B. A., Trip Report: Trip to Alcoa (Badin, N.C.) Aluminum Plant, Standards Development and Implementation Division, SSPCP, Environmental Protection Agency, Research Triangle Park, N.C. August 21, 1972.

16. Reference 1, above, p. 3-22.

17. Reference 1, above, p. 3-10, 3-12.

18. Reference 2, above, p. 2-9, 2-10.

19. Reference 1, above, p. 3-12, 3-13, 3-16.

20. Reference 2, above, p. 2-11.

5. FLUORIDE EMISSIONS[1]

Pollutants emitted from primary aluminum plants include fluorides, particulates, hydrocarbons (organics), sulfur oxides, carbon monoxide, and nitrogen oxides. EPA tests have shown nitrogen oxide levels to be insignificant. Although significant levels of sulfur oxides and carbon monoxide can be emitted, control technology has not been demonstrated and adequate source test data defining emission levels have not been obtained for these two pollutants. On the other hand, fluoride control has been demonstrated and characterized through EPA source tests. These tests have also shown that, if fluorides are well controlled, the resulting incidental control of particulates and organics will be good. For these reasons, the EPA standards of performance for new primary aluminum plants are stated in terms of fluoride. Likewise, discussion of emissions, control techniques, economic impact and emission standards in this document is restricted to fluorides except where other pollutants have a bearing on cost or performance.

5.1 POINTS OF EMISSION[1,2]

The principal points of fluoride emission are the primary and secondary emissions from the potrooms housing the reduction cells and, in the case of the prebake cell, the emissions from the associated anode bake plant. Figure 5-1 shows these emission points from a prebake plant with an anode ring furnace. The anode bake plant, together with its emissions, is not part of the Soderberg plant.

Figure 5-2 shows how the reduction cells are hooded and how the evolved gas stream is ducted to a primary control device exterior to

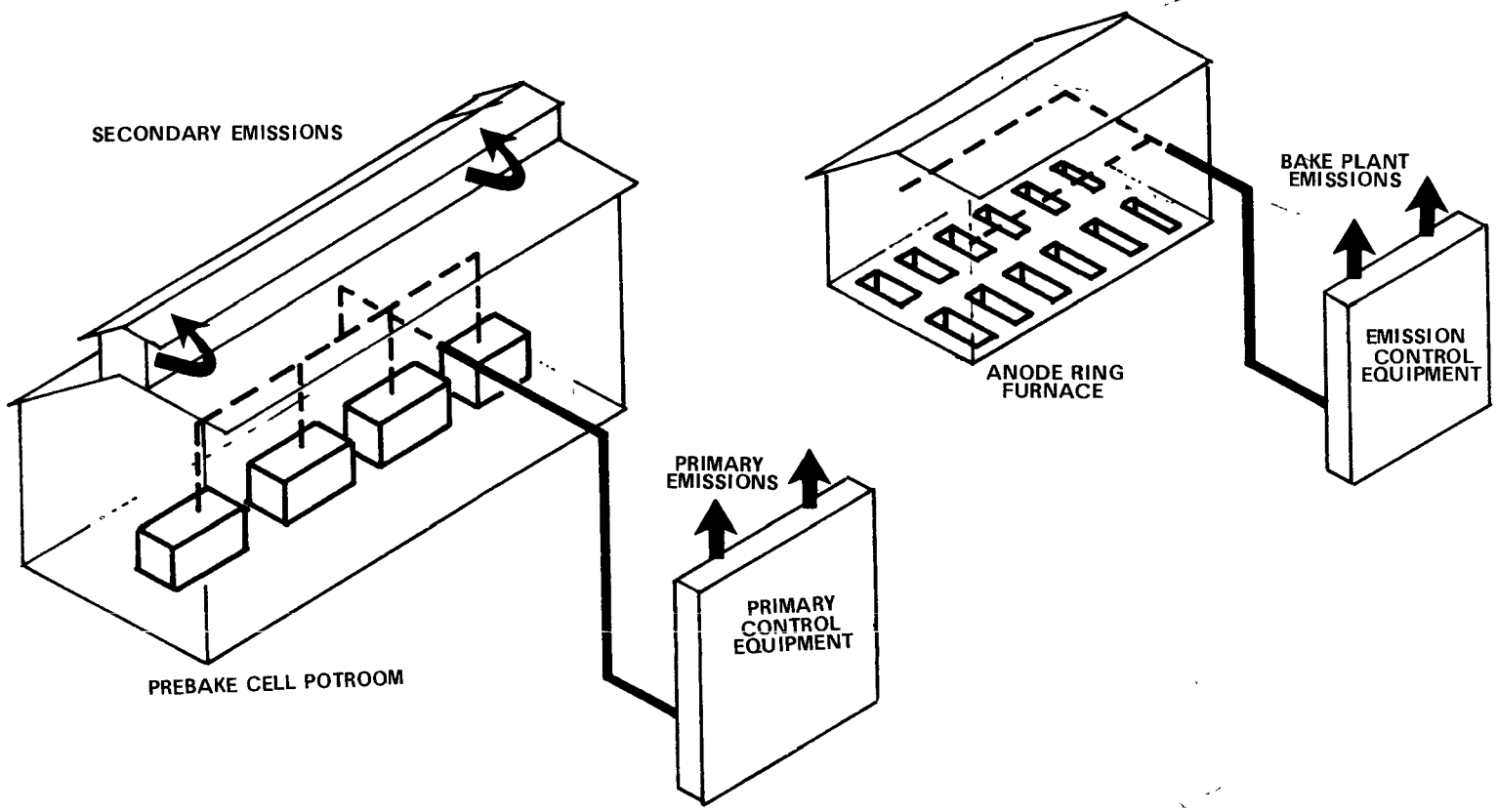

Figure 5-1. Prebake plant with anode ring furnace.

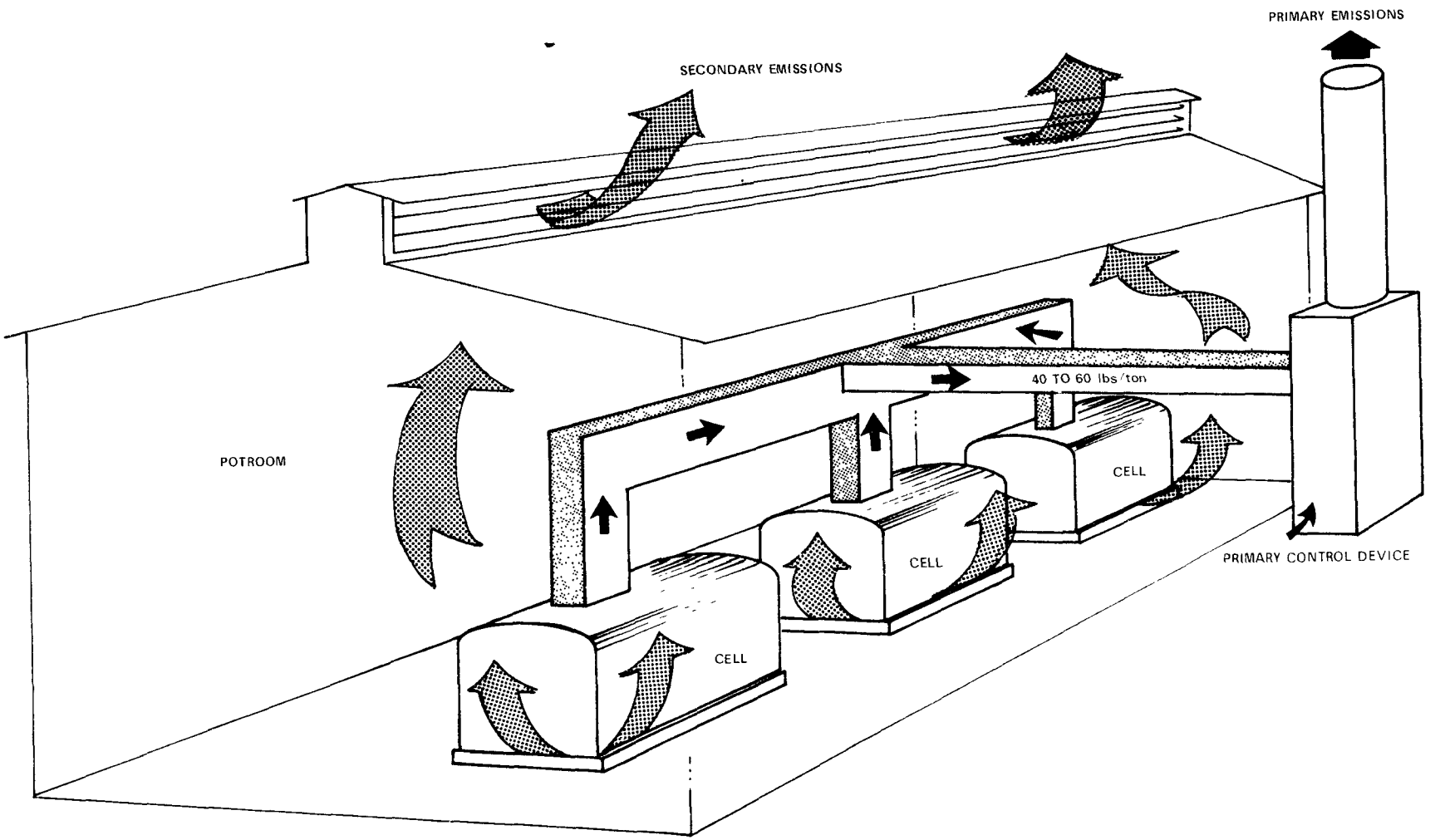

Figure 5-2. Potroom fluoride emission balance.

the potroom. Emissions from this device are termed primary emissions. That portion of the evolved gas stream that escapes the hooding passes to the monitor in the roof of the potroom, where there may or may not be a secondary control device. Emissions from the building are termed secondary emissions.

For potroom emissions, the overall control efficiency (OCE) may be expressed as:

$$OCE = \eta_{pc}\eta_{pr} + (1 - \eta_{pc})\eta_{sc}\eta_{sr} \tag{5.1}$$

where: η_{pc} = Primary collection efficiency

η_{pr} = Primary removal efficiency

η_{sc} = Secondary collection efficiency

η_{sr} = Secondary removal efficiency

Some plants in the United States employ both primary and secondary removal equipment. However, the majority of plants do not have secondary equipment, relying on efficient primary collection (good hooding) to obtain high overall control efficiencies. For these plants, $\eta_{sr} = 0$ and equation (5.1) reduces to:

$$OCE = \eta_{pc}\eta_{pr} \tag{5.2}$$

A few U. S. plants employ only secondary removal equipment. For these plants, $\eta_{pc} = 0$ and equation (5.1) reduces to:

$$OCE = \eta_{sc}\eta_{sr} \tag{5.3}$$

Although secondary collection efficiency might be assumed to be 100 percent in this scheme, deficiency in the design of the provisions for

air intake to the buildings may bring about a reduction in the collection efficiency. Some potline buildings have openings in the sidewalls at working floor level through which ventilation air enters as shown in Figure 5-3. This air is supposed to sweep past the cells and up through the roof monitor collection system, but adverse winds may blow through the buildings in such a way as to carry potline emissions out through wall openings in the buildings, thus short circuiting the collection system and reducing its efficiency. Figure 5-4 shows a building arrangement that helps to avoid this short circuiting of the collection system. Fresh air is drawn into the building below the working floor level and is allowed to pass up through gratings past the cells to the monitor collection system.

For the more general case of primary plus secondary control, if it is assumed that all secondary emissions are from the roof monitor, then:

$$\eta_{sc} = 1.0 \tag{5.4}$$

and equation (5.1) can be written in terms of three variables:

$$OCE = \eta_{pc}\eta_{pr} + (1 - \eta_{pc})\eta_{sr} \tag{5.5}$$

Equation (5.5) is the expression of OCE that will be used in discussing retrofit control techniques (Section 6). However, the aforementioned limitation on secondary collection efficiency because of short circuiting should be kept in mind.

Fluoride is lost from the potroom in other ways besides the airborne primary and secondary emissions. Figure 5-5 shows a fluoride

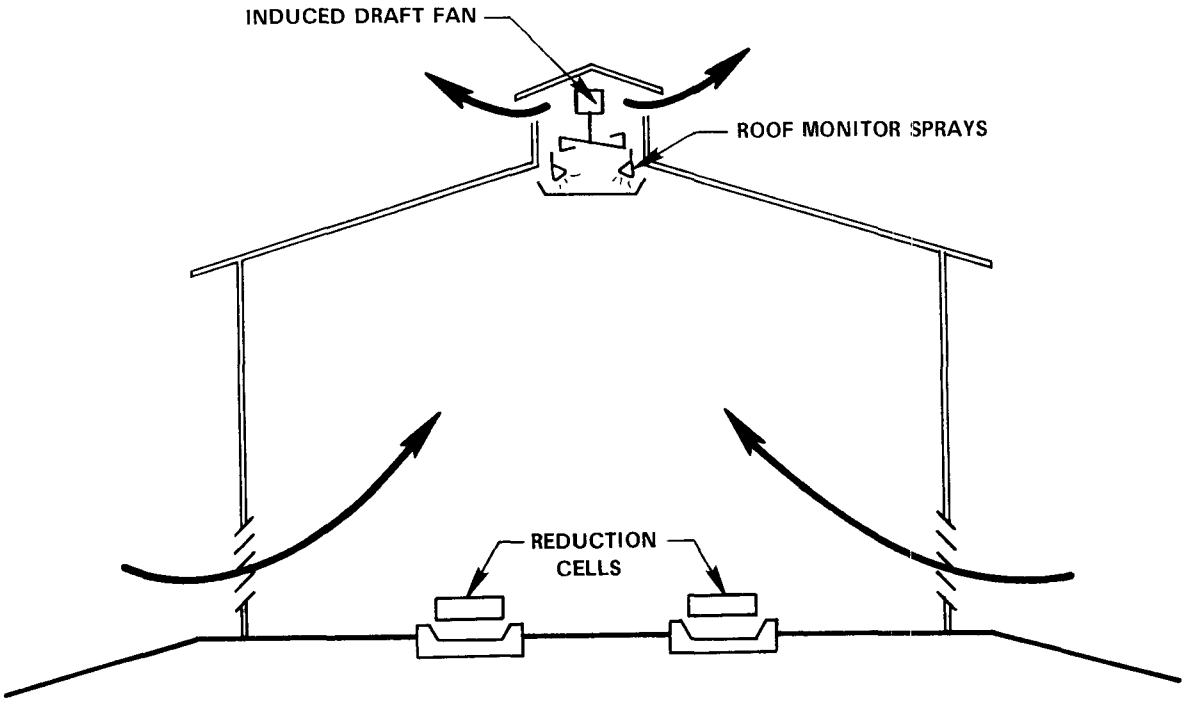

Figure 5-3. Room collection system, sidewall entry.[3]

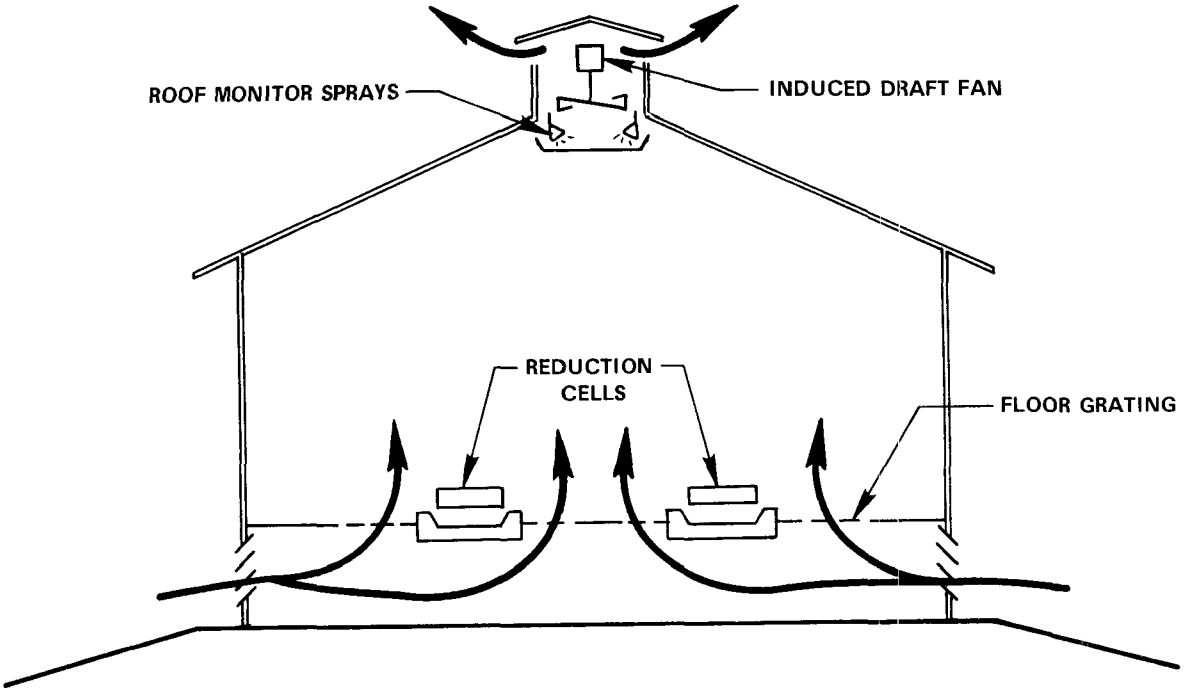

Figure 5-4. Room collection system, basement entry.[3]

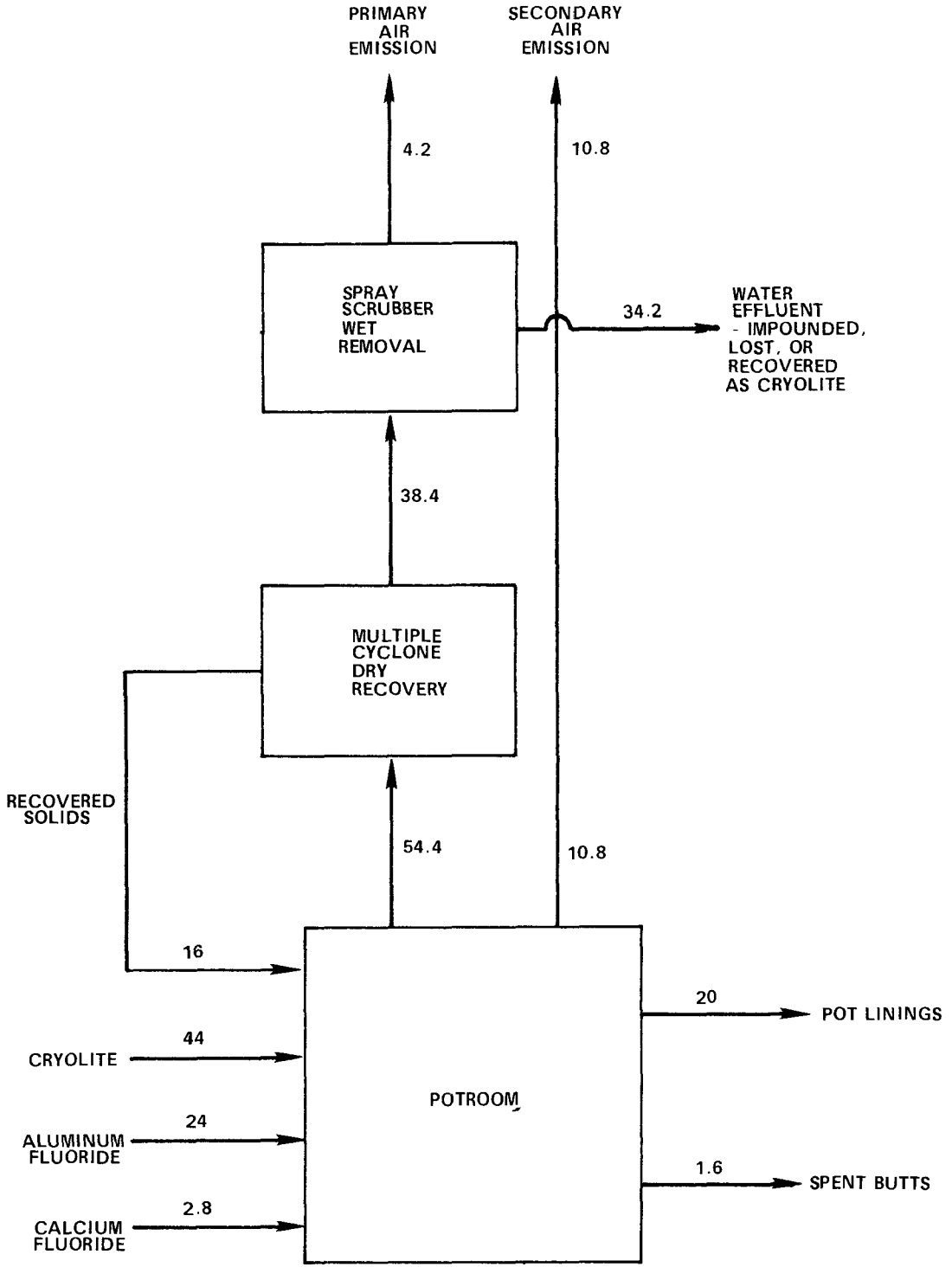

Figure 5-5. Specific prebake potroom fluoride balance (balance values in pounds of total fluoride per ton of aluminum produced).[4]

balance, in pounds of total fluoride per ton of aluminum produced, around a specific prebake potroom.[4] This particular plant has no secondary removal equipment. Its primary removal equipment consists of multiple cyclones for dry recovery of particulate fluoride followed by spray scrubbers to remove most of the gaseous fluoride and some particulate fluoride. This level of control is neither representative of best demonstrated control technology for new plants nor of best retrofit for existing plants.

For the potroom shown in Figure 5-5, approximately 65 of the 87 pounds of fluoride (or 75 percent of the total) added to the pots is released in the potroom emissions. About 20 pounds is absorbed into the pot cathode linings and 1.6 pounds adheres to the anode butts. The butts are returned to the carbon plant (see Figure 4-6) and the linings may be treated to recover cryolite after their useful life (about 3 years).

Of the approximately 54 pounds directed to the primary removal equipment, only 16 pounds are recovered and returned directly to the pots. About 34 pounds end up in the scrubber water discharge. This large quantity of fluoride may be discharged directly with the plant effluent, treated to remove most of the fluoride content and then discharged, or sent to a cryolite recovery plant for further processing. Zero fluoride water discharge is difficult to attain with any of these alternatives.

Although the airborne primary emission is only about 4 pounds, the relatively low primary collection efficiency (83.4 percent) and the lack of any secondary removal equipment for the specific potroom

result in a secondary emission of about 11 pounds, for a total emission of 15 pounds and an overall control efficiency of only 77 percent of the 65.2 pounds generated.

5.2 UNCONTROLLED EMISSIONS - SOURCE, CHARACTERISTICS, AND MINIMIZATION

5.2.1 Reduction Cells (All Types)[5,6]

Fluorides are emitted from the reduction cell as particulates and gases.

5.2.1.1 Particulates--Particulates originate from the volatilization of the cryolite bath with subsequent condensation, from mechanical entrainment of bath material by the air sweep over the cell surface, and from dusting of raw materials during the raw material feeding operations.

The largest particulate component is alumina. Fluoride components that have been identified include cryolite (Na_3AlF_6), aluminum fluoride (AlF_3), calcium fluoride (CaF_2), and chiolite ($Na_5Al_3F_{14}$). Other non-fluoride particulates are carbon, hydrocarbon tars, and iron oxide (Fe_2O_3). It is estimated that fluorides comprise 10 to 25 percent of the total particulates.[7]

Reported determinations of particle size distributions in primary uncontrolled cell emissions are plotted in Figure 5-6. Two plots are shown for prebake potlines, one reported as the average of four samples of pot emissions, the other as the average of five samples of electrostatic precipitator intake. A single plot

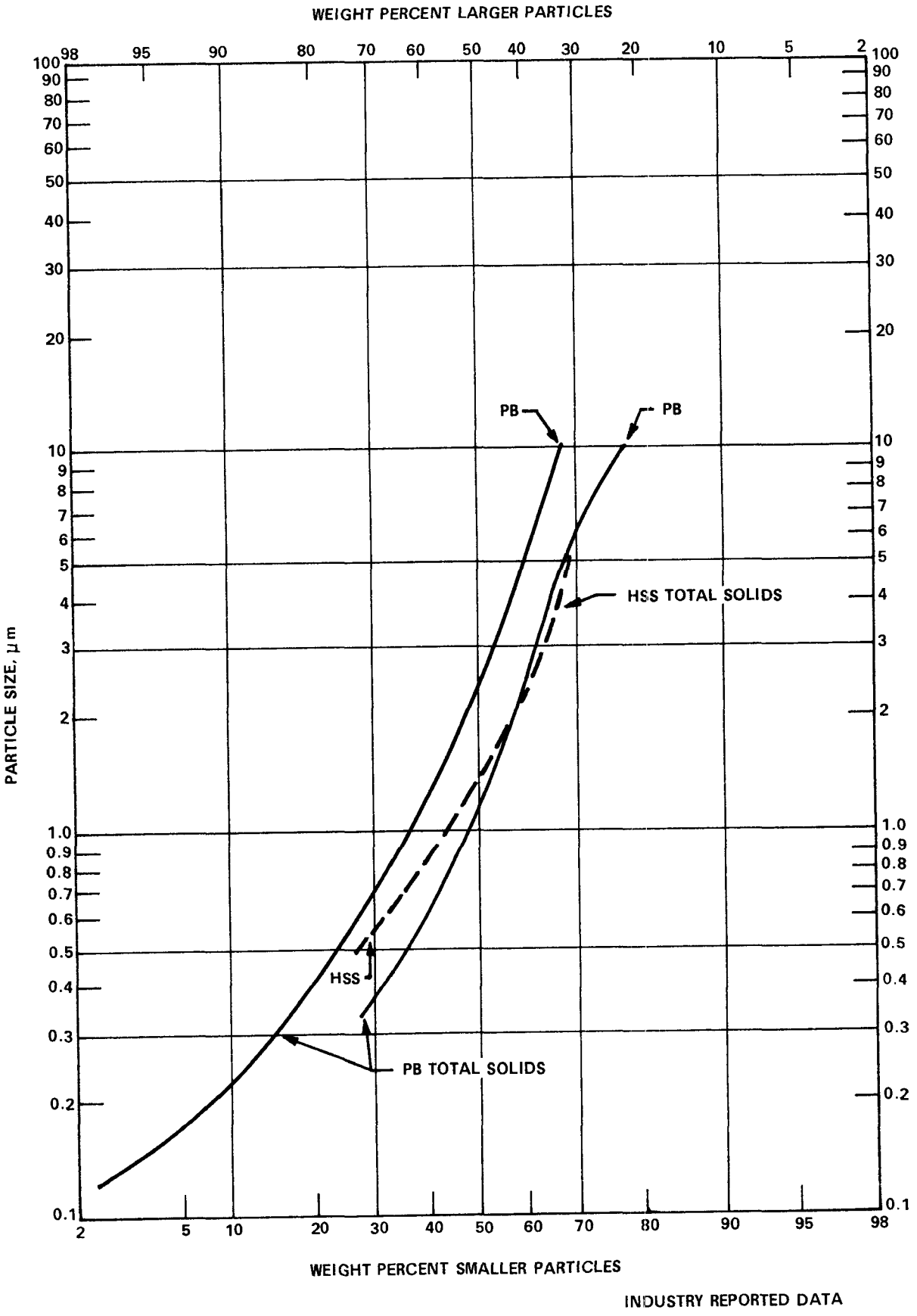

Figure 5-6. Particle size weight distribution of potline primary cell emissions.[8]

of average samples is shown for HSS. No comparable data have been obtained for VSS emissions.

These plots are illustrative of the comparative size characteristics of the primary dusts from two types of cells. The slopes of these data give an indication of the range of particle sizes in the samples, and the placement of the curves on the plot indicates that a substantial fraction of the prebake and HSS particulate weight is submicron, or in the range where particulate removal efficiencies of most equipment are low.

A more recent determination of particle size distributions in primary uncontrolled HSS cell emissions is shown in Figure 5-7. For this study: (1) The mass mean particle diameter was 5.5 micrometers (μm). (2) The geometric standard deviation was quite high (around 25). (3) Thirty percent by mass of the particles were less than 1 μm and 16 percent were less than 0.2 μm in diameter. (4) The mass mean particle diameter and the standard deviation were lower, and the particle mass concentration was higher when the cell crust was unstable (gas vents). (5) Increasing the air collection flow rate increased the mass mean particle diameter, but the particle mass concentration remained the same. (6) The fraction of particles less than 0.5 μm decreased as the distance from the cell increased in the primary cell gas collection duct.

Published or reported particle size distribution data are sparse and techniques for measurement are subject to variations, even among different investigators using similar equipment, so caution should be exercised in drawing conclusions from these data or in comparing data from one source with those from another.

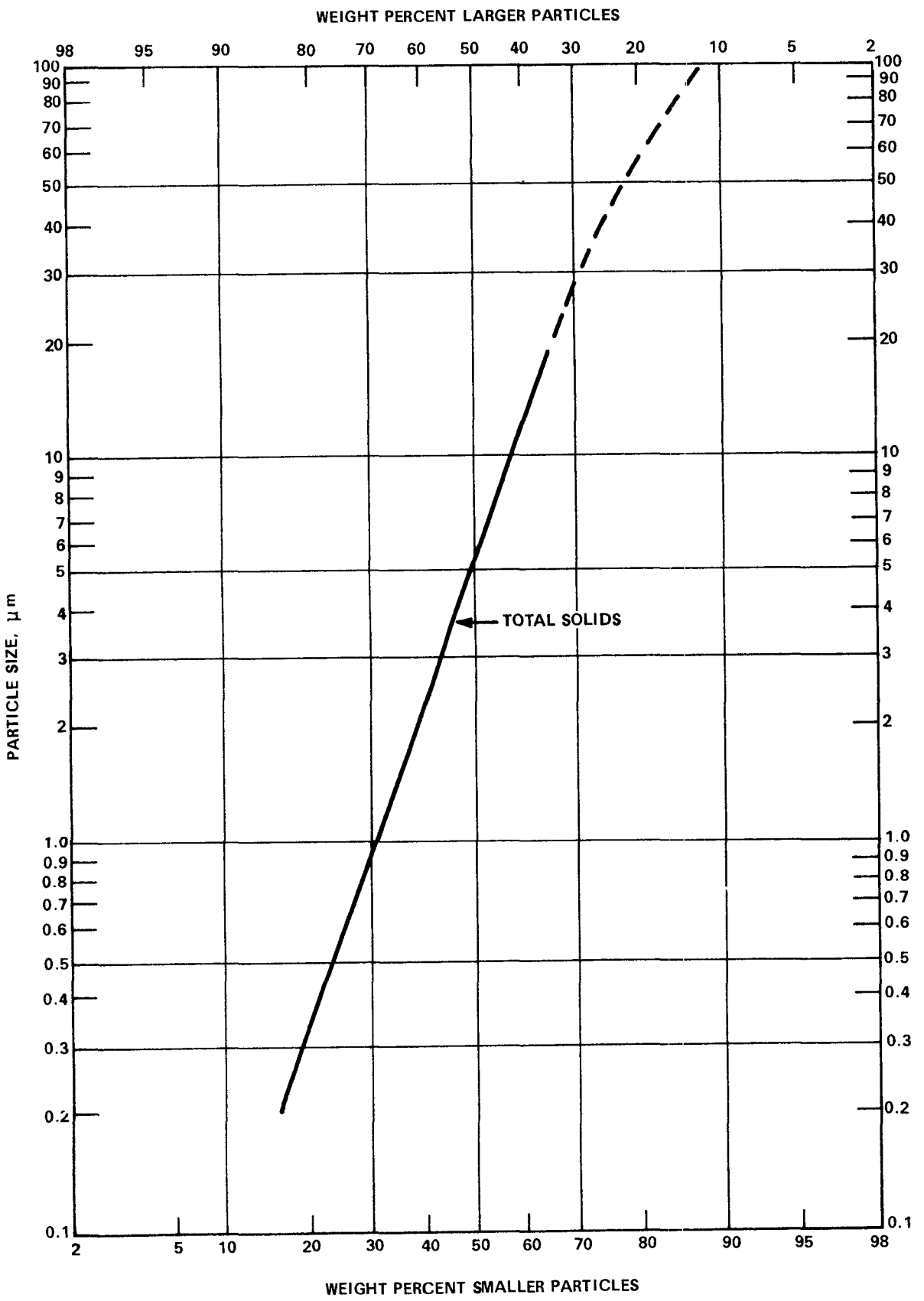

Figure 5-7. Particle size weight distribution of HSS primary cell emissions.[9]

5.2.1.2 Gases--The principal gases emitted from the reduction cell are carbon monoxide and carbon dioxide. Gaseous fluoride components present during normal operation include hydrogen fluoride (HF) and silicon tetrafluoride (SiF_4). Other gaseous, non-fluoride components are sulfur dioxide (SO_2), hydrogen sulfide (H_2S), carbonyl sulfide (COS), carbon disulfide (CS_2), and water vapor. The SO_2 is becoming a problem (1979) because of increasing sulfur content in anode raw materials. During an anode effect (discussed below), fluorocarbons, principally carbon tetrafluoride (CF_4) and very small amounts of hexafluoroethane (C_2F_6), are known to be produced.[2]

Thermal hydrolysis of volatized bath materials appears to be responsible for a substantial part of the hydrogen fluoride found in reduction cell fumes. This reaction of solid or vaporized fluorides at elevated temperatures takes place primarily at the point where the hot gases escape through vents in the crust at the cell surface.

A source of hydrogen is necessary for the generation of hydrogen fluoride. Water vapor in the air is a contributor of part of this hydrogen. Other sources include residual moisture in alumina and bath raw materials, and hydrocarbons in the carbon anodes. Generation of HF increases with increased cell operation temperature.

Some gaseous hydrogen fluoride is removed from the reduction cell fumes by interaction with the contained particulate matter. Chemical reaction is responsible for some of this pickup, and some is the result of chemisorption, absorption, and adsorption.

5.2.1.3 Composition and Quantity--Although the determination of total fluoride content of fumes may be quite reliable, estimates of the distribution of fluoride between gaseous and particulate forms is subject to

uncertainty because of such factors as the degree of thermal hydrolysis during burning of the gases and the method of separation of gases and particulates during sampling. One study reports that the ratio of gaseous to particulate fluoride in reduction cell fumes varies over a range of about 0.5 to 1.3.[10] These values are given for fumes that have burned in contact with air. Weighted average data obtained in a data acquisition questionnaire indicate that this ratio is about 1.2 for prebake cells, 1.7 for HSS cells, and 3.0 for VSS cells with integral gas burners.[11] Unburned fumes usually show a lower ratio of about 0.3.[10]

The rate of uncontrolled total fluoride emissions (evolution or generation) also varies over a wide range, from 25 to 65 pounds per ton (lb/ton) of aluminum produced. Section 5.3.1 gives the range and average evolution for each cell type.

The effective control of emissions from an aluminum reduction potline involves attention to:

1. Operating conditions in the cells.
2. Collection of pollutants from the cells.
3. Removal of pollutants from the collected streams.

Uncontrolled emission minimization through proper operation will now be discussed. Items (b) and (c) will be taken up in Section 6.

The quantity and composition of uncontrolled emissions can be strongly influenced by operating conditions such as temperature,

bath ratio, frequency of anode effects, and method of crust breaking. Moreover, it may vary with time for any given plant, because of gradual changes that may occur in potline operations.

5.2.1.4 Normal Operation--Under normal cell operation, experimental work established correlations between three cell operating parameters and the level of fluoride generation for a 10,000 ampere laboratory experimental prebake type aluminum reduction cell.[10] It was shown that increasing bath ratio (NaF/AlF_3), increasing alumina content of the bath, and decreasing the bath temperature combine to effect a decrease in the fluoride generated. These effects would be expected from the following principles of physical chemistry: (a) AlF_3 is more volatile than NaF and tends to be driven off as its relative amount increases; (b) decreased temperature decreases the evolution of all volatiles, including AlF_3; and, (c) the addition of alumina should tend to increase aluminum ions concentration in the melt, which may decrease fluoride ion concentration by a mass action effect. This effect would change fluoride ions into AlF_3. Fluoride ions in the bath are probably not volatile, but AlF_3 is volatile. Table 5-1 summarizes the findings of these tests.

Table 5-1. EXPERIMENTAL EFFECT OF THREE OPERATING VARIABLES ON FLUORIDE GENERATION[12]

Range of variable			
Bath ratio	Alumina content, %	Temperature °C	Fluoride level, % decrease
(1.44 to 1.54)	4	975	31
1.50	(3 to 5)	975	20
1.50	4	(982 to 972)	24

The report of the above experimental work calls attention to the fact that "determination of the effect of operating variables on the fluoride emission from electrolytic reduction cells is difficult to accomplish with a high degree of certainty. This is true even with small-scale experimental cells operated by research personnel. It appears from the work reported here, however, that cell temperature, bath ratio, and alumina concentration are the most important variables affecting total fluoride emission."[12]

It should be noted that the researchers did not carry out an exhaustive study of all the variables that could affect fluoride emissions. Also, the absolute relationships reported may not hold for full-scale cell operation.

5.2.1.5 Process Interruption--Normal cell operation is interrupted by occasional anode effects, cell working to introduce alumina feed, and periodic tapping of molten aluminum. Cells may also be operated at elevated temperatures in a "sick" condition. Normal operation of prebake cells is interrupted by the periodic changing of anodes, and normal operation of VSS cells can be interrupted by a "stud blow."

Tapping and changing anodes cause moderate increases in fluoride evolution, depending upon how much of the molten electrolyte is exposed. Anode effects, operation at elevated temperatures, cell working, and stud blows can cause significant increases in fluoride evolution and will now be examined in some detail.

5.2.1.5.1 Anode effects--Normally a cell operates with about 2 to 5 percent of alumina in solution in the bath, but as the electrolysis proceeds the alumina content is decreased, being intermittently replenished

by feed additions. When this content falls to about 1.5 to 2.0 percent the phenomenon of an "anode effect" occurs. It is believed that at this alumina concentration the bath fails to wet the carbon anode and a gas film of CF_4 collects under the anode. This film causes a high electrical resistance, the normal cell voltage increases 10 to 15-fold, and the power input to the cell increases more than 10-fold. To correct the condition the cell crust must be broken and more alumina added to bring the concentration back to its normal content. The gas film under the anode is dispersed and the cell returns to normal voltage.

The power increase to the cell is converted into heat, which in turn raises the temperature of the cell electrolyte. At the higher cell temperature, the fluoride evolution is increased. For the anode effect evolution rate compared with quiet cell operation, one study[13] found a 27-fold increase in solid F and a 2.7-fold increase in HF. Another study[14] determined that the normal fluoride evolution from a crusted-over cell is approximately 30 pounds of fluoride per ton of aluminum produced, but during an anode effect the fluoride evolution rate increases to approximately 756 lb/ton of aluminum.

Depending on the promptness with which the cell operator reacts, this anode effect may last from 3 to 15 minutes. Occasionally cell operators will deliberately allow anode effects to continue in order to soften an unusually hard crust. Automatic crustbreakers help to minimize the need for this practice. In normal cell operation

with manual crust breaking, the frequency of anode effects is from less than 1/2 to as many as 6 anode effects per cell-day.

The frequency of anode effects can be reduced to the range of 1/2 to 1 anode effect per cell-day by placing cells on an anode effect suppression system. Workings of the cell are scheduled so that the alumina content of the electrolyte is replenished before it falls below the concentration causing the anode effect. The newer computer-controlled potlines may operate almost free from anode effects.

5.2.1.5.2 Elevated temperature operation--The higher the bath temperature, the more will the bath salts vaporize and be carried into the cell emissions. Normal operating temperatures for cells with a bath ratio of approximately 1.40 are between 970 and 980 °C. Abnormal or "sick" cells operate at temperatures in excess of 1000 °C and sometimes they do not crust over. Under these conditions, the high-temperature molten electrolyte is exposed, and there is a large increase in volatilization of bath salts with a corresponding increase of fluoride. Operation of cells at the lowest possible temperature to minimize fluoride emissions requires trained, conscientious cell operators or computer control.

The temperature of the cell may be lowered by adding lithium salts to the electrolyte to lower its freezing point, but the net benefit of these additions is the subject of controversy. One foreign investigator[15] reports among other advantages, a substantial decrease of fluoride losses in waste gases, which resulted in a reduction of fluoride emissions. In this country, experiments undertaken by a major producer were reported to have demonstrated an increase in fluoride emissions upon adding lithium salts.

The electrolyte system is complex, and electrolyte conditions which reduce fluoride emissions from the molten bath, but which simultaneously destroy the ability of the bath to crust over and carry a cover of alumina, may result in a net increase in cell emissions; the alumina cover intercepts a substantial quantity of fluoride and returns it directly to the molten bath.

5.2.1.5.3 Cell working, mechanization, and computer control--Breaking the crust of the cell for a cell working causes the fluoride evolution rate to rise to approximately 106 lb/ton of aluminum.[14] The duration of a cell working varies according to the size and type of the cell and whether the cell is equipped with automatic crust breakers. With the automatic crust breaker on a prebake cell, working is accomplished quickly, taking only 1 or 2 minutes. For a normal-size prebake cell of approximately 90,000 amperes, a manual working may be accomplished in 5 to 10 minutes depending upon the hardness of the crust. Soderberg cells and side-worked prebake cells are normally worked by means of a pneumatic crust breaker similar to a paving breaker. A working may be accomplished in approximately 5 minutes on a 90,000-ampere side-worked cell.

Mechanization of crust breaking and cell feeding allows the cell operators time to maintain close watch over the operating cells and to control them within narrow temperature ranges. The overall effect is lower average operating cell temperature, fewer and briefer anode effects, and a reduction in the fluoride content of cell off-gases compared with normal manual cell operation.

Full mechanization of reduction cells makes it possible to apply computer control, which incorporates the frequent scanning of operating

variables on each cell and the triggering of automatic corrective action for any variation that is outside set operating limits. Such control makes it possible for all cells in a potline to be operated at the lowest practical temperature and with nearly complete freedom from upsets caused by anode effects. Cell feeding and crust breaking operations can be cycled in response to the needs of individual cells, and the number of abnormal or "sick" cells usually associated with manual potline operation can be reduced. Variations in cell operation caused by having different shift personnel tending the cells over the 24-hour period are largely avoided.

Many plants are developing various degrees of computer control in combination with mechanization. Full automation has been satisfactorily accomplished on at least one plant.

5.2.1.5.4 VSS stud blows--An abnormal occurrence that can increase emissions from a VSS cell is a stud blow. (See Section 4.3.1 for a process description of the VSS cell). This abnormality happens when the steel, current-carrying studs are not extracted before being exposed to the bath at the bottom of the anode. Stud blows can last up to an hour before the unbaked paste portion of the anode eventually covers over the exposed area. The frequency of stud blows can be minimized by proper operator attention.

5.2.2 Anode Bake Plant

Uncontrolled fluoride emissions from anode bake plants originate from the recycled anode butt scraps that carry absorbed or adherent bath materials (principally cryolite) back into the anode cycle. The fluorides

are incorporated into the green anode paste and released during the subsequent baking process. (See Sections 4.1 and 4.2 for further process information.)

5.2.2.1 Ring Furnace--Although the physical state of the fluorides evolved from the ring furnace has not been thoroughly investigated, it is believed that most of the fluorides evolved are gaseous at the elevated operating temperature. (Combustion temperature is around 1300°C.)

The fluoride balance in Figure 5-5 shows 1.6 pounds of fluoride recycled with the butts per ton of aluminum produced. An emission level of 1.6 lb/ton represents emissions that can be expected when adherent cryolite is simply knocked off the butts at the potroom prior to sending them to the anode plant. It is reported that fluoride emissions can be maintained at less than 0.4 lb/ton (a four-fold reduction) by exercising particular attention to cleaning the spent anode butts.[16]

The principal ring furnace emissions are solid products of firing combustion (smoke) and burned and unburned hydrocarbons derived from the heating and carbonizing of the paste binder pitch. Some SO_2 and sulfur trioxide (SO_3) is derived from the sulfur in the coke. Visible emissions can be reduced by:[17]

1. Using natural gas instead of oil to fire the furnace,
2. Preventing leakage of cold air into the sections under fire, and
3. Not locating the exhaust manifold too far from the sections under fire.

5.2.2.2 Tunnel Kiln--Although the direct-fired ring furnace has been the normally used type for prebake anodes, attention has been given to the development of continuous tunnel kilns for this purpose. (See Section 4.2.1.2 for a process description of the tunnel kiln.) Combustion conditions are significantly different and zonal temperature control closer, with one result being a reduction in the emission of fluorides by a factor of 0.02,[16] or to a level of $\leq$ 0.03 lb/ton of aluminum produced. Drastic reductions in the emission levels of other ring furnace pollutants are also achieved.

Test data on tunnel kilns are old. Emission criteria developed for tunnel kilns should be based on new sampling data collected by prescribed EPA methods, or other methods.

5.2.2.3 Production Bases--The above discussion of fluoride emissions is based on weight of fluoride emitted per weight of aluminum produced. This generally involves converting the weight of carbon anode produced to the equivalent weight of aluminum produced. The proper method for performing the calculation is given in the primary aluminum Standards of Performance for New Stationary Sources.[18] The weight of total fluoride emitted per unit of time is divided by the weight of anode produced per same unit of time. This ratio is divided by 2 or some other proven factor representing the ratio of the weight of aluminum produced to the weight of anode consumed.

5.3 TYPICAL FLUORIDE EMISSIONS AND EXTENT OF CONTROL

5.3.1 Reduction Cells (All Typed)

Figure 5-5 shows a total fluoride balance around a specific prebake potroom that has no secondary removal equipment. The plant's

primary removal equipment consists of multiple cyclones followed by spray scrubbers. The total fluoride emission level is 15 lb/ton of aluminum produced. This emission level is typical of a poorly controlled prebake, VSS, or HSS potroom.

Table 5-2 gives a range of cell evolution for center-worked prebake (CWPB), side-worked prebake (SWPB), VSS and HSS plants. The table also shows average evolution, average total primary plus secondary emissions, and overall control efficiencies for all 31 U.S. plants and for the 29 plants comprising the controlled segment of the industry; one CWPB and one SWPB plant are uncontrolled. The ranges and averages in Table 5-2 are computed directly from existing control combinations shown in Table 7-2.

Table 5-2 shows wide ranges of cell evolution, particularly for CWPB plants. Average evolution is highest for SWPB and VSS plants being about 10 lb/ton higher than for HSS plants and nearly 5 lb /ton higher than for CWPB plants. Inclusion of the uncontrolled SWPB plant lowers SWPB overall control efficiency much more than does inclusion of the uncontrolled CWPB plant lower CWPB efficiency, because the SWPB plant accounts for a much larger percentage of its respective total cell type capacity.

In 1970, an EPA contract study determined overall control efficiencies for the domestic aluminum industry.[2] Compared to Table 5-2, efficiencies for the controlled segment of the industry were 8 percent lower for prebake plants, 13 percent lower for HSS plants, and 9 percent lower for VSS plants.[11] Overall control efficiency for all plants, controlled and uncontrolled, was 8 percent lower.[19] The improvement in overall control from 1970 to 1975 demonstrates existence of a potential for emission reduction.

Table 5-2. POTROOM TOTAL FLUORIDE EMISSIONS IN U.S., 1975

Cell Type[a]	Range of Evolution, lb F/ton Al	Controlled and Uncontrolled Plants			Controlled Plants Only		
		Average Evolution, lb F/ton Al	Average Emission, lb F/ton Al	Overall Control Efficiency, %	Average Evolution, lb F/ton Al	Average Emission, lb F/ton Al	Overall Control Efficiency, %
CWPB	25.7 - 65.6	40.8	6.3	85	40.8	4.6	89
SWPB	37.3 - 53.0	44.7	13.0	71	43.9	4.8	89
HSS	28.4 - 45.0	34.0	5.7	83	34.0	5.7	83
VSS	30.5 - 53.5	44.4	5.2	88	44.4	5.2	88
All Cell Types	25.7 - 65.6	40.4	7.0	83	40.2	5.0	88

[a]CWPB -- center-worked prebake cells, SWPB -- side-worked prebake cells, VSS -- vertical stud Soderberg cells, HSS -- horizontal stud Soderberg cells.

Table 5-3 shows the extent of control in the domestic industry by cell type. The percentages are computed directly from the collected control status information that was used to construct Table 7-2. The table shows that CWPB plants have the greatest potential for improving primary control. It also shows that secondary control is not employed at any CWPB or HSS plants. By comparison, the aforementioned contract study determined that, in 1970, only 31 percent of capacity had best primary control and only 4 percent had best primary and secondary control.[20]

Table 5-3. EXTENT OF POTROOM CONTROL, 1975

Cell Type[a]	Annual Capacity, tons Al	Percentage of Capacity Having: At Least Primary Control	At Least Best Primary Control	Best Primary Control + Secondary Control
CWPB	2,704,000	95	61	0
SWPB	738,000	81[b]	79[b]	59
HSS	1,045,000	100	83	0
VSS	635,000	100	100	33
All Cell Types	5,122,000	95	73	11

[a] CWPB -- center-worked prebake cells, SWPB -- side-worked prebake cells, VSS -- vertical stud Soderberg cells, HSS -- horizontal stud Soderberg cells.

[b] Or, secondary control with equivalent overall control efficiency.

5.3.2 Anode Bake Plant

Table 5-4 gives a 1970 breakdown of evolved and emitted particulate, gaseous, and total fluorides on a pounds per ton of aluminum basis and resultant overall control efficiencies for ring furnaces.[19] The breakdown is based on an EPA contract study.[2] The data in this study are based on reported data on furnace gases, the control equipment identified in individual bake plants, and estimated control efficiencies ascribed to these control systems. The evolved total fluoride emission factor of 0.86 lb/ton lies between uncontrolled emission factors of 1.6 lb/ton representative of poor cleaning of the anode butts and of 0.4 lb/ton representative of proper cleaning. (See Section 5.2.2) According to Table 5-4, 95 percent of the evolved and emitted ring furnace fluorides are gaseous.

It is estimated that prebake plants representing about 43 percent of bake plant capacity have some sort of emission control, some of it experimental.[21] It is estimated that spray scrubber control can achieve 96 percent removal efficiency on gaseous fluorides and 75 percent removal efficiency on particulates and that 40 percent of bake plant capacity have this level of control.[21]

Tunnel kilns are reported to produce much lower emissions than ring furnaces (See Section 5.2.2). However, the proportion of prebake anode capacity baked in tunnel kilns in 1970 was small enough (about 7 percent) that to ignore them in the above discussion does not affect the limited accuracy of the calculations.

Table 5-4. RING FURNACE FLUORIDE EMISSIONS IN U.S., 1970[19]

	Controlled and uncontrolled furnaces
Gaseous fluoride	
Evolved, lb/ton Al	0.816
Emitted, lb/ton Al	0.483
Overall control efficiency, %	41
Particulate fluoride	
Evolved, lb/ton Al	0.044
Emitted, lb/ton Al	0.024
Overall control efficiency, %	45
Total fluoride	
Evolved, lb/ton Al	0.859
Emitted, lb/ton Al	0.507
Overall control efficiency, %	41

Primary aluminum is a significant contributor of atmospheric fluorides. One study[22] estimated that aluminum accounted for 13.5 percent of total fluoride atmospheric emissions from major industrial sources in 1968. Section 9.1 gives potroom and anode bake plant annual total U.S. fluoride emissions, as well as annual particulate emissions.

5.4 REFERENCES FOR SECTION 5

1. Background Information for Standards of Performance: Primary Aluminum Industry. Volume 1: Proposed Standards. Emission Standards and Engineering Division, OAQPS, Environmental Protection Agency, Research Triangle Park, N.C. October 1974.

2. Air Pollution Control in the Primary Aluminum Industry. Singmaster and Breyer, New York, N. Y. Prepared for Office of Air Programs, Environmental Protection Agency, Research Triangle Park, N. C., under Contract Number CPA 70-21. July 23, 1973. p. 3-3 to 3-6, 3-25, 5-5 to 5-7, 8-9, 8-13.

3. Reference 2, above, p. 5-6.

4. Reference 2, above, p. 3-4.

5. Reference 2, above, p. 4-2 to 4-9, 5-1 to 5-4.

6. Background Information for Establishment of National Standards of Performance for New Sources. Primary Aluminum Industry. Environmental Engineering, Gainesville, Florida. Prepared for Air Pollution Control Office, Environmental Protection Agency, Durham, N. C., under Contract Number CPA 70-142, Task Order No. 2. (Draft Copy dated March 15, 1971). p. 3-3 to 3-4.

7. Reference 2, above, p. 4-2.

8. Reference 2, above, p. 4-6.

9. Hanna, T. R. and M. J. Pilat. Size Distribution of Particulates Emitted from a Horizontal Spike Soderberg Aluminum Reduction Cell. J. Air Pol. Contr. Assoc. 22:533-536, July 1972.

10. Henry, J. L. A Study of Factors Affecting Fluoride Emission from 10 KA Experimental Aluminum Reduction Cells. In: Extractive Metallurgy of Aluminum. New York, Interscience Publishers, 1963. pp. 67-81.

11. Reference 2, above, p. 7-4 to 7-6.

12. Reference 2, above, p. 4-9.

13. Less, L. N. and J. Waddington. The Characterization of Aluminum Reduction Cell Fume. In: Light Metals. New York, Proceedings of Symposia, 100th AIME Annual Meeting, March 1-4, 1971.

14. Miller, S. V. et al. Emission of Fluorine Compounds From Electrolysis Cells in the Production of Aluminum. Sverdlovsk Nolich, Issled Inst.

15. Wendt, G. Operating Experiences With Electrolytes Containing Lithium Fluoride. TMS of AIME Paper No. A70-39, February 16, 1970.

16. Reference 2, above, p. 4-11.

17. Varner, B. A., Trip Report: Trip to Alcoa (Badin, N. C.) Aluminum Plant. Standards Development and Implementation Division, SSPCP, Environmental Protection Agency, Research Triangle Park, N. C. August 21, 1972.

18. Title 40 - Protection of Environment. Subpart S - Standards of Performance for Primary Aluminum Reduction Plants. Federal Register. 39(206):37732, October 23, 1974.

19. Reference 2, above, p. 7-13.

20. Reference 2, above, p. 9-11 to 9-21.

21. Reference 2, above, p. 7-2.

22. Biologic Effects of Atmospheric Pollutants: Fluorides. National Academy of Sciences, Washington, D. C. Prepared for Environmental Protection Agency, Durham, N. C., under Contract Number CPA 70-42. 1971. p. 9.

6. CONTROL TECHNIQUES FOR POTROOM AND ANODE BAKE PLANT FLUORIDES

Section 6.1 discusses potroom retrofit primary collection systems, and explains in detail a method for calculating hooding efficiencies for each of the four cell types. The calculated efficiencies are shown to agree well with those given by several plant operators, and are important in later development of the State guidelines for existing primary aluminum plants.

Section 2 discusses potroom and anode bake plant removal equipment, both in general terms. It is difficult to generalize about retrofit controls for this industry since costs and methods of emission control vary widely from plant to plant. Hence, Section 6.3 gives three detailed and seven capsule case descriptions for potroom retrofits at ten actual plants. These descriptions cover nine best primary control retrofits and two best secondary control retrofits, but the plants selected do not necessarily typify all domestic plants.

Finally, Section 6.4 discusses the length of time needed to install fluoride controls at existing primary aluminum plants.

6.1 POTROOM RETROFIT PRIMARY COLLECTION SYSTEMS[1-6]

For potroom emissions, overall control efficiency (OCE) was expressed in Section 5.1 as:

$$OCE = \eta_{pc}\eta_{pr} + (1 - \eta_{pc})\eta_{sr} \qquad (5.5)$$

where: η_{pc} = Primary collection efficiency

η_{pr} = Primary removal efficiency

η_{sr} = Secondary removal efficiency

The best retrofit primary removal equipment characteristically have high total fluoride primary removal efficiencies, generally 98 percent or greater. Secondary removal equipment characteristically have total fluoride secondary removal efficiencies no higher than 75 percent and many plants have no secondary control. Hence a high overall control efficiency greatly depends on an efficient primary collection system.

Primary collection systems include the hooding devices installed at the reduction cells, the individual cell ducting to common headers serving groups of cells, and the main ducting leading to the primary removal equipment. This section discusses hooding design, presents an experimental method for calculating primary collection efficiency, and discusses primary exhaust rates and ducting layouts.

6.1.1 Cell Hooding

A high primary collection efficiency greatly depends on a hood that is highly efficient at containing fluoride emissions and directing them to the primary removal equipment. The characteristics of the different cell types place various limitations on hooding design.

6.1.1.1 Prebake Cells -- Figure 6-1 illustrates the hooding for a typical prebake cell. The hooding consists of removable end doors and a gas collection skirt on both sides made up of segmented, lightweight aluminum doors or side covers.

As mentioned in Section 4.2.2, prebake (PB) cells may be center-worked (CWPB) or side-worked (SWPB). CWPB cells can be worked from the end or internally without removing the side covers. Because of this, CWPB potlines have total fluoride primary collection efficiencies of

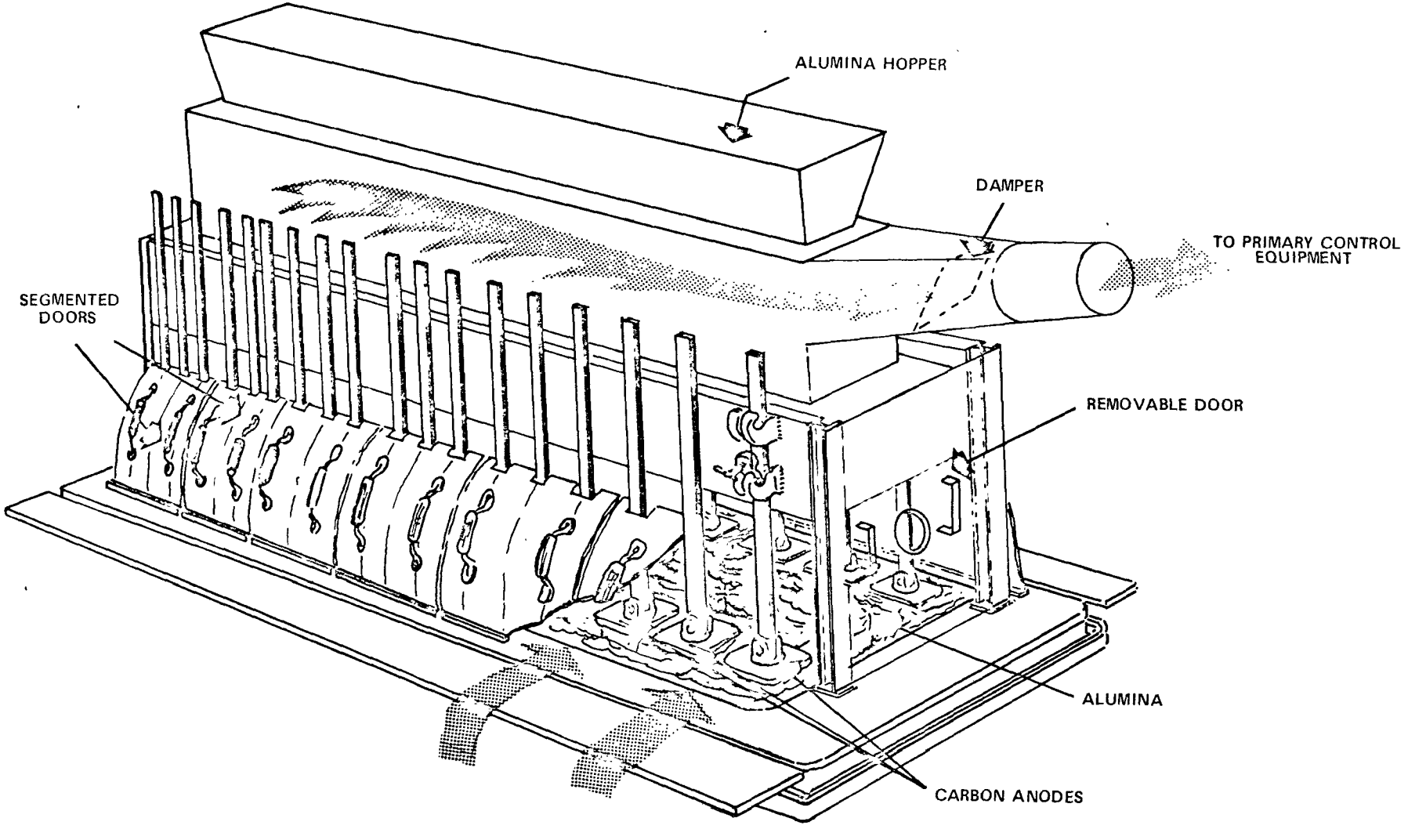

Figure 6-1. Typical prebake cell hooding.

at least 95 percent or are capable of achieving this level through appropriate cell design changes to improve hooding. The proper approach is to tightly seal the hood and to perform as many cell operations as possible with the hood intact. Tight seals are achieved by having tight-fitting end doors and side covers that fit snugly and align with each other. Edge sealing of worn and misaligned covers is improved by including deep 90° side edges on covers at time of fabrication. The top seals around the anode stems are the most difficult to achieve. This is due to the low density of the gases inside the hooding enclosure. This top seal is particularly difficult for prebake cells equipped with anode stems that vary in cross-sectional area, resulting in variable clearances as the anodes are lowered. As for internal working, CWPB cells can be equipped with automatic crust breakers and are capable of achieving the full mechanization with computer control described in subsection 5.2.1.5.3.

At least one CWPB plant has adopted a different hooding design from that shown in Figure 6-1. In this design, the side covers are flat, heavy aluminum doors hinged at the bottom with a gravity seal at the top. In addition, a labyrinth seal provides an excellent cover-to-cover fit. This door is expected to provide a retrofit primary collection efficiency of 97 percent, although this has not yet been demonstrated in full-scale potline operation.

SWPB cells must be worked manually along both sides with the side covers removed. Hence, SWPB potlines are typically capable of achieving a total fluoride primary collection efficiency of no higher than 85 percent, and some can do no better than 80 percent. The tight sealing

and computer control discussed above are possible with SWPB cells, but the installation of automatic crust breakers and full mechanization are not.

To accomplish side working on all SWPB cells in a potroom within a reasonable time period, all the side covers on one cell are normally removed while that cell is worked. For this reason, some SWPB plants have installed flat aluminum or steel hood doors that extend the full length of both sides of the cell. When closed, they form an angular gas collection skirt similar to that shown in Figure 6-1, but not segmented. They are opened by air cylinder or air motor to one or more open positions, depending on operating requirements. The opening linkages must be precisely designed, and can be quite complicated. At each end of the cell, the doors seal against stationary wing panels that can be adjusted to minimize leakage. SWPB plants employing these hood designs have cells set into the floor rather than elevated. Heat-resistant cloth is installed around the door bottom and gravity seals the hood when the door is closed.

SWPB potlines can seldom be converted to CWPB potlines to improve their primary collection efficiency and reduce the need for secondary control. This is because the steel superstructure is the most expensive part of the SWPB cell and would have to be completely replaced in converting to a CWPB design. The relatively less costly common cathode shell is removed anyway about once every three years for lining replacement. All CWPB cells and some SWPB cells are aligned side by side as shown in Figure 4-3. However, with SWPB cells, more space is required between the cells and less between the cells and the potroom walls. Hence a SWPB potroom would probably be too narrow for CWPB cells, and much of

its length would be wasted in a conversion. If left no alternative but to convert to the CWPB design, the owner of a SWPB potline would probably abandon the potline and build a new CWPB facility.[7]

As shown in Figure 6-1, CWPB and SWPB cells generally have single-point pickup at one end of the cell. To get uniform gas flow across the cell, the gas duct at the top of the cell is vaned to give the same pressure drop from various points above the cell to the single-point pickup.

6.1.1.2 -- Horizontal Stud Soderberg (HSS) Cells -- Figure 6-2 illustrates the total-enclosure hooding for a typical HSS cell; however, the anode pins and the steel casing generally extend closer to the bath than is indicated. The hood doors extend the full length of both sides of the cell, and working a side requires opening an entire door. Most draft systems cannot provide sufficient capture velocity to efficiently collect emissions under these circumstances.

HSS potlines are capable of achieving total fluoride primary collection efficiencies of 85 to 95 percent. Like CWPB potlines, the proper approach involves tighter hood sealing and internal working with the hood doors closed. Tighter sealing can be achieved by replacing manual with mechanically operated doors and by eliminating gaps on the top and the ends of the cell hooding enclosure. To minimize door openings, at least one HSS plant (See section 6.3.1.1) has installed a mechanized feeding system that feeds most of the alumina with the hood doors closed. It is still necessary to manually work the cell periodically, but the length of time per cell-day that the doors are open is reduced. The mechanized feeding system may operate at preset

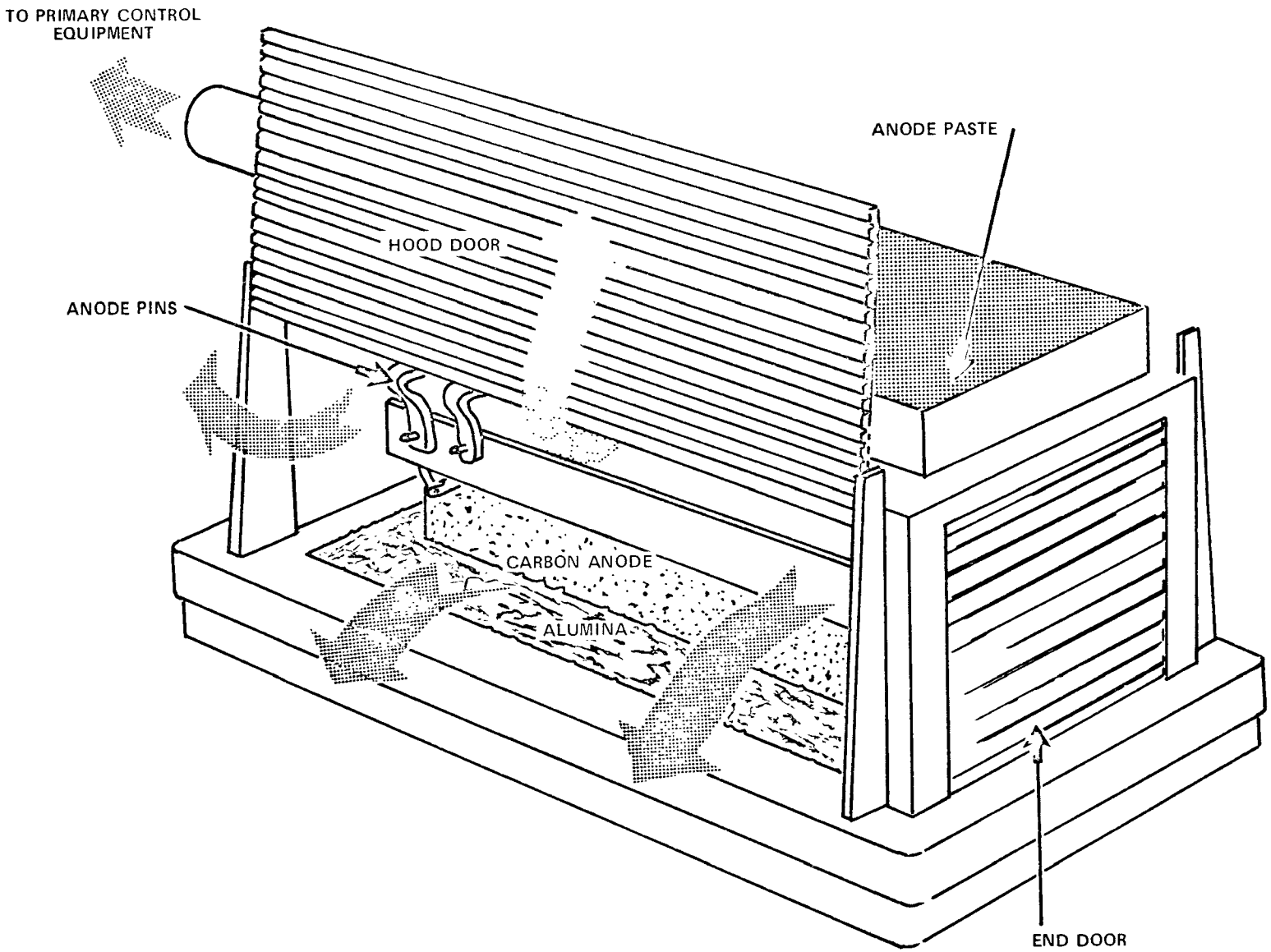

Figure 6-2. Typical horizontal stud Soderberg cell hooding.

time intervals, or the potline may be computer-controlled with alumina being added on a demand basis.

The primary collection efficiency an HSS potline can achieve depends upon cell age and cell geometry.[8] Older, smaller cells may need to be opened more frequently than newer ones. For example, one plant has cells installed in the early 1940's that must be opened about 50 times per ton of aluminum produced, and cells installed in the late 1960's that are opened only 16 times per ton. As for geometry, two HSS plants have cells with an unusually high length:width ratio of 8:1 as opposed to a normal ratio of 5:1. Cell working constraints require single point pickup at one end of the cell, rather than the desirable pickup at both ends.

6.1.1.3 - Vertical Stud Soderberg (VSS) Cells -- Figure 6-3 illustrates the hooding for a typical VSS cell. The hood skirt consists of an inverted U- or V-shaped channel that runs around the edge of the anode assembly at the bath level. The channel is formed by the anode itself and the outer anode casing. The channel serves as a duct to carry the evolved gases to integral gas burners, typically one on each end of the cell. Hence, a substantial area of the cell surface is outside the hood skirt. This annular, exposed area is normally covered by a crust of cryolite and alumina, the latter adsorbing fluorides that otherwise would escape. However, this crust is broken when the cell is worked, exposing the molten bath until the crust reforms or the bath is covered with alumina after the cell is worked. During the exposed period, large quantities of fluoride escape to the potroom roof. Total fluoride pri-

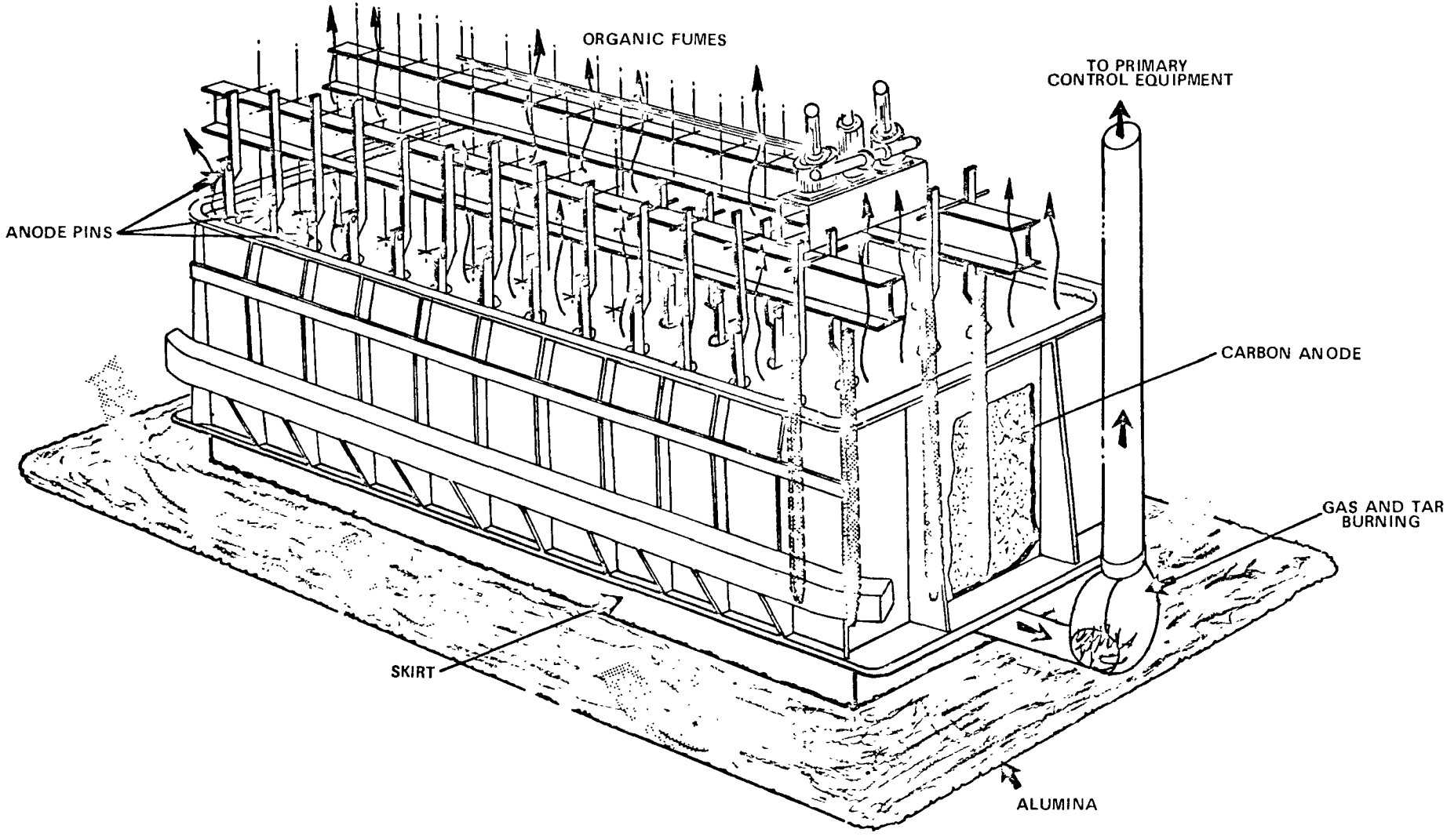

Figure 6-3. Typical vertical stud Soderberg cell hooding.

mary collection efficiencies for VSS potlines vary from 75 to 92 percent.

Table 6-1 shows the effect that exposed bath area has on primary collection efficiency for two VSS plants.[9] Both plants were built by the same firm and have cells capable of producing about one-half ton of aluminum per day. Table 6-1 shows that the plant with the greater exposed surface area has a correspondingly lower primary collection efficiency.

Table 6-1. PRIMARY COLLECTION EFFICIENCY VERSUS EXPOSED ANNULAR AREA FOR TWO VSS PLANTS[9]

Plant	Exposed Annular Area, ft^2	Primary Collection Efficiency, %
S	37.6	80 - 85
T	62.4	75 - 80

6.1.1.4 Effect of Hooding on Overall Control -- The aforementioned hooding limitations mean that CWPB and some HSS plants appear capable of achieving high overall control efficiencies without installing secondary control if appropriate cell design changes are made to improve hooding. High primary collection efficiencies (90 percent or greater) are not achievable on SWPB, most VSS, and some HSS plants, and secondary control would be necessary for these plants to achieve high overall control efficiencies.

6.1.2 Calculation of Primary Collection Efficiency

One primary aluminum company operating SWPB cells of Swiss-design submitted an experimental method for calculating primary collection efficiency. All the fluoride generated from unhooded cells in a tight building was sent to a secondary wet scrubber, whose water was analyzed.[10] Analysis was repeated for all the cell functions; this resulted in the generation severity indices shown in Table 6-2.[11] For instance, anode changing generates six times as much fluoride as normal cell operation. Since all but the normal operation requires the hood to be open, the number of minutes in 24 hours required for each function is measured, and designated as "function time" in Table 6-2.[11]

Using the submitted data, generation rates for each function and an overall generation rate are calculated. Establishing the percent of leakage for each cell function, the secondary loading (non-primary collection) for each function and an overall secondary loading can be calculated. For one plant employing this cell design, the leakage rate is estimated to be 7 percent when the cell is closed.[10] For this same plant, the hood door opens fully for anode changing, and leakage is assumed to be 85 percent. For all other non-normal operations, the hood door is partially open, and leakage is assumed to be 70 percent.

Primary collection is determined as the difference between generation rate and secondary loading, from which a primary collection efficiency of 80 percent is calculated. As of spring 1975, the above plant had not completed hood installation, and hence had not measured primary collection and secondary loading. However, they estimate primary collection

Table 6-2. CALCULATION OF PRIMARY COLLECTION EFFICIENCY FOR ONE SWISS-DESIGN SWPB PLANT[10,11]

Cell Function	Fluoride Generation Severity Index (A)	Function Time, Minutes (B)	Generation Rate, A · B	Leakage
Normal Operation	1 X[a]	1359	1359 X	7%
Anode Effects	5.5 X	6	33 X	70%
Anode Changing	6 X	8	48 X	85%
Metal Tapping	2 X	6	12 X	
Bath/Metal Measurement	1 X	2	2 X	
Short Side Crust Breaking	4.5 X	10	45 X	
Long Side Crust Breaking	7 X	26	182 X	70%
Bath Addition	1 X	1	1 X	
Alumina Addition	1 X	20	20 X	
Other Controls	2.5 X	2	5 X	
Totals		1440	1707 X	

Average generation rate = 1707 X / 1440 = 1.185 X

Secondary (2°) loading = Generation · Leakage = [0.07 (1359 X) + 0.85 (48 X) + 0.70 (300 X)] / 1440 = 0.240 X

Primary collection efficiency = [(Generation - 2° loading) / Generation] · 100% = [(1.185 X - 0.240 X) / 1.185 X] · 100% = 80%

[a]X is defined as the normal fluoride generation from a crusted-over cell, expressed in units of weight of fluoride generated per weight of aluminum produced--e.g., lb F/ton Al.

efficiency will be 81 percent,[11,12] in close agreement with the calculated efficiency.

No other aluminum companies submitted severity indices or function times for any cell types. However, the above calculational procedure was extrapolated to other cell types, keeping the same severity indices but modifying function times and leakages. Other cell types chosen for this analysis were:

a. An SWPB plant of French design that is retrofit case description C in section 6.3.3.

b. A typical American-design CWPB plant.

c. An HSS plant that is retrofit case description A in section 6.3.1.

d. A typical VSS plant.

Table 6-3 shows the calculations for the French-design SWPB plant. The function time for anode effects has been reduced from 6 minutes to 3 because this plant is computer-controlled, while the Swiss-design plant was not. Leakage rate is estimated to be 5 percent when the cell is closed.[10] The hood door opens fully for all non-normal operations. Leakage is assumed to be 70 percent instead of the 85 percent for the Swiss-design plant because, unlike the latter, the French-design plant has a fixed superstructure that should cover a greater portion of the cell with the doors open. The calculated primary collection efficiency of 83 percent agrees well with a measured efficiency of 85 percent.[13]

Table 6-3. CALCULATION OF PRIMARY COLLECTION EFFICIENCY FOR ONE FRENCH-DESIGN SWPB PLANT - RETROFIT CASE DESCRIPTION C.

Cell Function	Fluoride Generation Severity Index (A)	Function Time, Minutes (B)	Generation Rate, A · B	Leakage
Normal Operation	1 X	1362	1362 X	5%
Anode Effects	5.5 X	3	16 X	70%
Anode Changing	6 X	8	48 X	
Metal Tapping	2 X	6	12 X	5%
Bath/Metal Measurement	1 X	2	2 X	
Short Side Crust Breaking	4.5 X	10	45 X	70%
Long Side Crust Breaking	7 X	26	182 X	
Bath Addition	1 X	1	1 X	
Alumina Addition	1 X	20	20 X	
Other Controls	2.5 X	2	5 X	
Totals		1440	1693 X	

Average generation rate = 1693X / 1440 = 1.176 X

Secondary (2°) loading = Generation · Leakage = [0.05 (1376 X) + 0.70 (317 X)] / 1440 = 0.202 X

Primary collection efficiency = [(Generation - 2° loading) / Generation] · 100% = [(1.176 X - 0.202 X) / 1.176 X] · 100% = 83%

Table 6-4 shows the calculations for a typical modern American-design CWPB plant. Compared to Table 6-2, the plant is again assumed to be computer-controlled, the function time for anode effects being reduced from 6 minutes to 3. The function time for short side crust breaking is zero since there is none; and that for long side crust breaking is halved since a CWPB cell has one crust break area while an SWPB cell has two. The cell remains closed during normal operation, crust breaking, and raw material additions. The leakage rate with the door closed is estimated at 3 percent.[10] The cell end covers must be removed for metal tapping and, presumably, for bath/metal measurement with an estimated leakage rate of 8 percent.[14] Removal of side covers during anode effects and anode changing increases the leakage rate to 50 percent.[15] The calculated primary collection efficiency of 95 percent agrees with measured efficiencies at numerous CWPB plants.

Table 6-5 shows the calculations for the HSS plant that is retrofit case description A in section 6.3.1. For HSS plants, the function times for anode changing and short side crust breaking are zero since these operations are not performed. Plant A estimates that only 20 percent of crust breaking is done with the doors open. This translates to a function time of 5 minutes with the doors open; 21 minutes with the doors closed. Plant A estimates the door is open a total of 8 minutes per cell day. For Table 6-5, this means that only 3 minutes open time remain for metal tapping, anode effects, flex raising and stud pulls combined. Function times have been arbitrarily assigned for these functions, and anode effects do occur even though the table shows a

Table 6-4. CALCULATION OF PRIMARY COLLECTION EFFICIENCY FOR TYPICAL AMERICAN-DESIGN CWPB PLANTS

Cell Function	Fluoride Generation Severity Index (A)	Function Time, Minutes (B)	Generation Rate, A · B	Leakage
Normal Operation	1 X	1385	1385 X	3%
Anode Effects	5.5 X	3	16 X	50%
Anode Changing	6 X	8	48 X	
Metal Tapping	2 X	6	12 X	8%
Bath/Metal Measurement	1 X	2	2 X	
Short Side Crust Breaking	4.5 X	0	0 X	
Long Side Crust Breaking	7 X	13	91 X	
Bath Addition	1 X	1	1 X	3%
Alumina Addition	1 X	20	20 X	
Other Controls	2.5 X	2	5 X	
Totals		1440	1580 X	

Average generation rate = 1580 X / 1440 = 1.097 X

Secondary (2°) loading = Generation · Leakage = [0.03 (1502 X) + 0.50 (64 X) + 0.08 (14 X)] / 1440 = 0.054 X

Primary collection efficiency = [(Generation - 2° loading) / Generation] · 100% = [(1.097 X - 0.054 X) / 1.097 X] · 100% = 95%

Table 6-5. CALCULATION OF PRIMARY COLLECTION EFFICIENCY FOR ONE HSS PLANT - RETROFIT CASE DESCRIPTION A.

Cell Function		Fluoride Generation Severity Index (A)	Function Time, Minutes (B)	Generation Rate, A · B	Leakage
Normal Operation		1 X	1386	1386 X	5%
Anode Effects		5.5 X	0	0 X	-
Anode Changing		6 X	0	0 X	-
Metal Tapping		2 X	2	4 X	70%
Bath/Metal Measurement		1 X	2	2 X	5%
Short Side Crust Breaking		4.5 X	0	0 X	-
Long Side Crust Breaking	Door Closed	7 X	21	147 X	5%
	Door Open	7 X	5	35 X	70%
Bath Addition		1 X	1	1 X	
Alumina Addition		1 X	20	20 X	5%
Other Controls		2.5 X	2	5 X	
Flex Raise & Stud Pull		1 X	1	1 X	70%
Totals			1440	1601 X	

Average generation rate = 1601 X / 1440 = 1.112 X

Secondary (2°) loading = Generation · Leakage = [0.05 (1561 X) + 0.70 (40 X)] / 1440 = 0.073 X

Primary collection efficiency = [(Generation - 2° loading) / Generation] · 100% = [(1.112 X - 0.073 X) / 1.112 X] · 100% = 93%

zero function time. Also, the fluoride generation rate for flex raising and stud pulls has been assumed equal to normal operation -- particulate generation rate would not be equal. Cell leakages are assumed identical to the French design SWPB plant since the cell has a fixed superstructure. The calculated primary collection efficiency of 93 percent agrees well with a plant estimated efficiency of 95 percent that is based on prototype testing--see section 6.3.1.3.

This method of calculating primary collection efficiency is not very sensitive to errors in function time or duration of hood opening. For example: at unchanged leakage for normal operation, all other leakages listed in Table 6-2 were increased by 10 percent - all in the same direction. The calculated primary collection efficiency decreased less than 2 percent from that shown.

The 3 percent hood leakage under normal operation (Table 6-4) was assumed to double to 6 percent. All other operating leakages were held constant. The calculated primary collection efficiency decreased less than 3 percent. Another calculation on this same CWPB cell assumed that all cell openings were 3 times as frequent as shown in Table 6-4. The primary collection efficiency decreased less than 2 percent from that shown.

The examples shown in Tables 6-2 through 6-5 apply to specific plants and are given to illustrate this method for estimating primary collection efficiency. Users of the method should - as a minimum - determine the function times for plants that they want to check.

Extrapolation of the above calculational procedures to VSS cells is probably without theoretical justification since the hooding is radically different. However, Table 6-6 shows such an estimate for a typical VSS plant. The function times are the same as in Table 6-2, except there is no anode changing. Stud blows have been ignored since their severity index is unknown. It is assumed there is no capture of emissions from all non-normal operations, and a 3 percent leakage from the anode channel during normal operation. The calculated primary collection efficiency of 80 percent is within the range of VSS cell performance of 75 to 92 percent given in section 6.1.1.3.

6.1.3 Primary Exhaust Rates

Operating the cells at the proper primary exhaust rate is important for efficiency primary collection. Too low an exhaust rate results in a low collection efficiency; too high a rate results in the primary removal equipment being oversized and in solids being needlessly entrained from the cell surface into the equipment. The proper exhaust rates for a given cell design cannot be empirically determined because the total open area of an operating cell's hood is virtually impossible to calculate. Instead,

Table 6-C. ESTIMATE OF PRIMARY COLLECTION EFFICIENCY FOR TYPICAL VSS PLANTS

Cell Function	Fluoride Generation Severity Index (A)	Function Time, Minutes (B)	Generation Rate, A · B	Leakage
Normal Operation	1 X	1367	1367 X	3%
Anode Effects	5.5 X	6	33 X	100%
Anode Changing	6 X	0	0 X	-
Metal Tapping	2 X	6	12 X	
Bath/Metal Measurement	1 X	2	2 X	
Short Side Crust Breaking	4.5 X	10	45 X	
Long Side Crust Breaking	7 X	26	182 X	100%
Bath Addition	1 X	1	1 X	
Alumina Addition	1 X	20	20 X	
Other Controls	2.5 X	2	5 X	
Totals		1440	1667 X	

Average generation rate = 1667 X / 1440 = 1.158 X

Secondary (2°) loading = Generation · Leakage = [0.03 (1367 X) + 1.00 (300 X)] / 1440 = 0.237 X

Primary collection efficiency = [(Generation - 2° loading) / Generation] · 100% = [(1.158 X - 0.237 X) / 1.158 X] · 100% = 80%

the optimum exhaust rate is usually determined from a cell prototype. This rate is that which will continuously maintain a slight negative pressure drop across all the hood openings. The pressure drop can be measured by sensitive pitot tubes and anemometers, or proper operation can be visually checked by releasing smoke just outside the openings and observing the resultant travel path.[7]

The proper exhaust rate is most difficult to maintain when the hood door is open. Some designs maintain it through "dual range ventilation" as explained in section 6.1.4. Consideration should also be given to the fact that the hood will inevitably deteriorate with time as the cell deteriorates. Such deterioration can be held to a minimum, however, by maintaining the hoods in proper condition and making sure that operators exercise care in handling hood doors.

EPA personnel visited seven primary aluminum plants in the Spring of 1973 to develop data for this guidelines document. For these seven plants, Table 6-7 shows primary collection efficiencies and primary exhaust rates for retrofits either underway or completed.[3,4,13,16-18] The age of the plant and of the control equipment (if different) is also given. From Table 6-7 it can be concluded that:

1. HSS potlines generally require higher primary exhaust rates than CWPB potlines to achieve the same primary collection efficiency.
2. Older CWPB potlines generally require higher primary exhaust rates than newer CWPB potlines to achieve the same primary collection efficiency.

Table 6-7. PRIMARY COLLECTION EFFICIENCY VERSUS STANDARD CUBIC FOOT PER TON OF ALUMINUM PRODUCED FOR SEVEN PRIMARY ALUMINUM PLANTS [3,4,13,16-18]

Cell type	Plant code [a]	Year plant started up	Before/after retrofit [b]	Primary collection efficiency, %	Scf/ton Al x 10^6
CWPB	D	1939[c]	Both	95	5.05
CWPB	F	1952	Both	98	4.78
CWPB	G	1958	Before	65	4.11
CWPB	G	1958	After	95[d]	4.11
SWPB	C	1965	After[e]	85	3.44
VSS	E	1958	Both	81	0.67
HSS	B - south plant	1941	Before	80	5.06
HSS	B - south plant	1941	After	87	7.85
HSS	B - north plant	1968	Both	95	6.81
HSS	A	1/2 - 1942[f] 1/2 - 1968	Before	94	6.57
HSS	A	1/2 - 1942[f] 1/2 - 1968	After	95	7.09

FOOTNOTES:

a. Plants have the same codes here and in Section 6.3.

b. As of May 1975, retrofits were in progress at plants D, G, and B-south; and had been completed within the previous five years at plants F, C, E, B-north, and A.

c. Hoods, ducts, fans, and removal equipment were installed in 1949.

d. Collection efficiency will be increased by cell design changes to effect tighter hood sealing.

e. Plant had no primary control before retrofit.

f. Present ducts, fans, and removal equipment were installed in 1951.

3. Even with higher exhaust rates, older HSS potlines may not readily achieve primary collection efficiencies as high as those attainable by newer HSS potlines.

VSS cells characteristically have lower primary exhaust rates than either prebake or HSS cells.

6.1.4 Ducting Layouts

Practice varies among aluminum plants as to the number of cells connected with a single control system. In centralized or "central" installations, an entire potline of 150 or more cells may be ducted to a single control system; whereas, in decentralized or "courtyard" installations where smaller control units are usually located in courtyards between potlines, 20 or fewer cells may be ducted to each control system. Figures 6-4 through 6-6 illustrate schematically several possible ducting layouts for PB, VSS, and HSS potlines.[19] The manifold ducts are generally inside the potroom and elevated above and near the cells. However, some SWPB and VSS potrooms have basements, the primary exhaust being directed downward into manifold ducts in the basement.

The illustrative courtyard installations are patterned after existing installations and were selected as the bases for the cost analysis in Section 7. With a courtyard layout, each piece of removal equipment is a separate module. To control a larger plant, additional modules are added. The use of courtyard layouts thus eliminates the possible economy of scale associated with control of larger plants. Furthermore, the control costs can be presented on a cost per ton of aluminum capacity basis because the control cost per ton does not vary with plant

COURTYARD SCHEME (20 CELLS PER MANIFOLD DUCT)

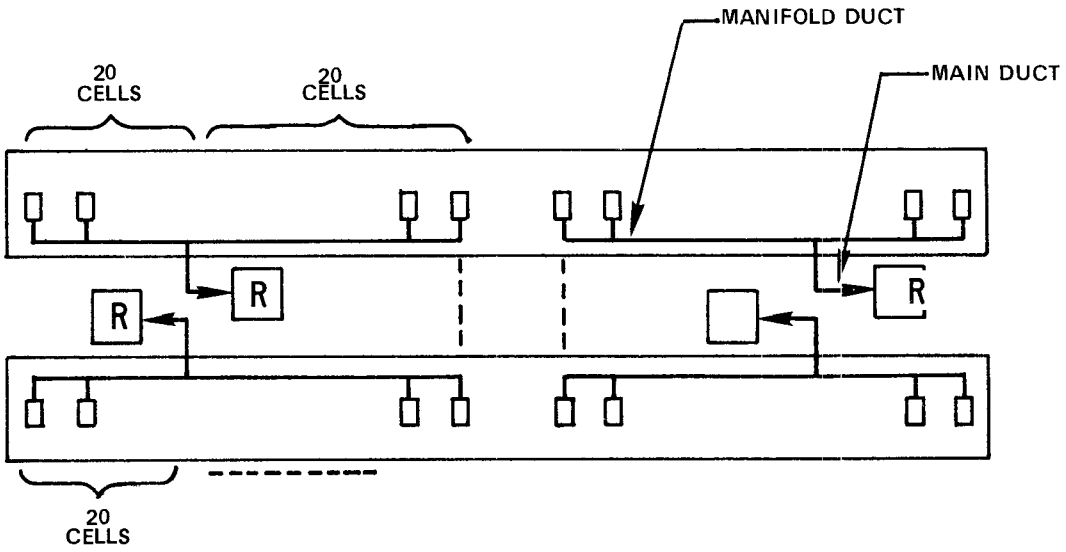

CENTRAL SCHEME (80 CELLS PER MANIFOLD DUCT)

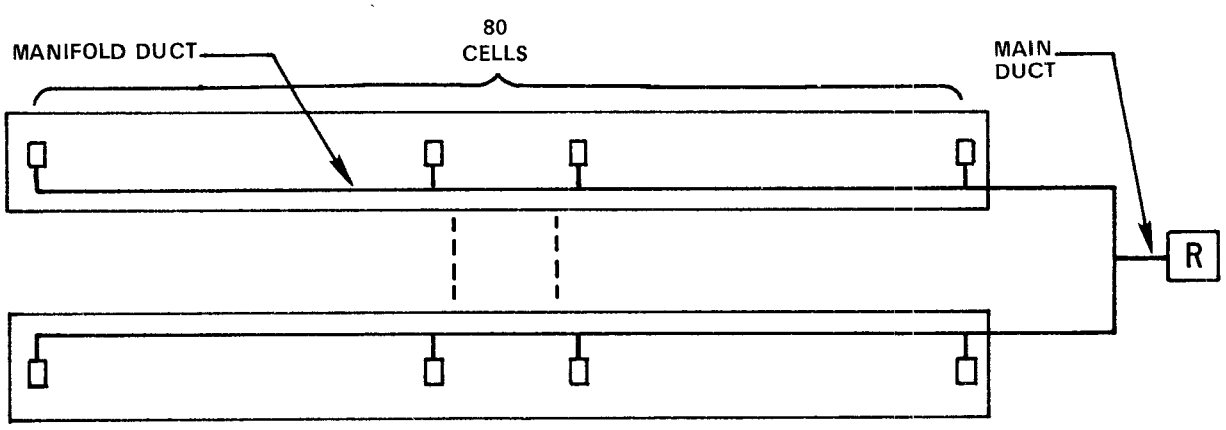

Figure 6-4. Primary collection systems: typical ducting layouts for a single prebake potline with 160 cells, 2 rooms (R indicates removal equipment).

COURTYARD SCHEME (10 CELLS PER MANIFOLD DUCT)

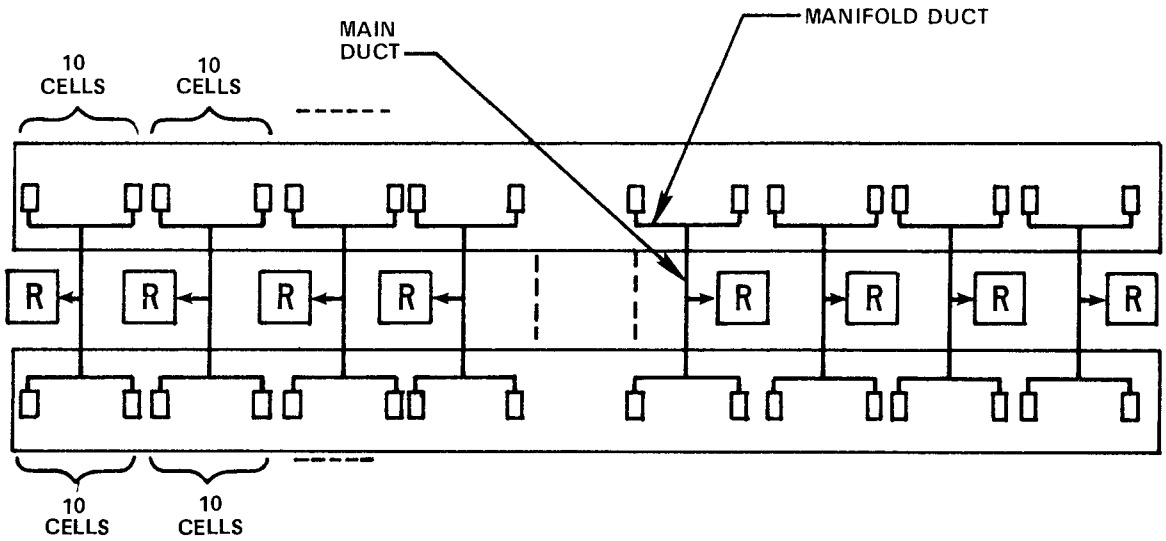

Figure 6-5. Primary collection systems: typical ducting layout for a single VSS potline with 160 cells, 2 rooms (R indicates removal equipment).[19]

COURTYARD SCHEME (10 CELLS PER MANIFOLD DUCT)

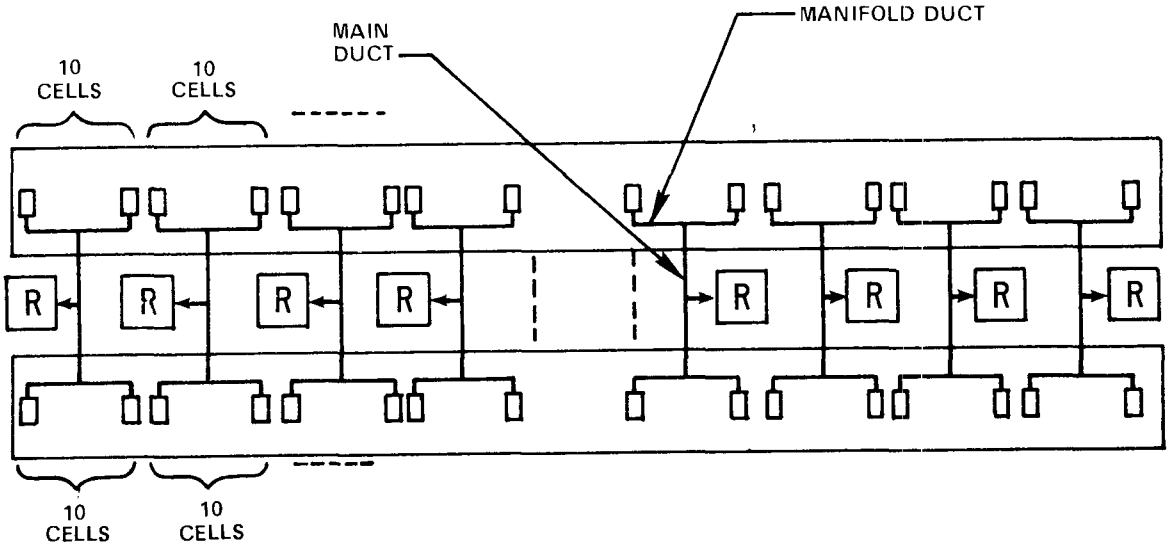

CENTRAL SCHEME (80 CELLS PER MANIFOLD DUCT)

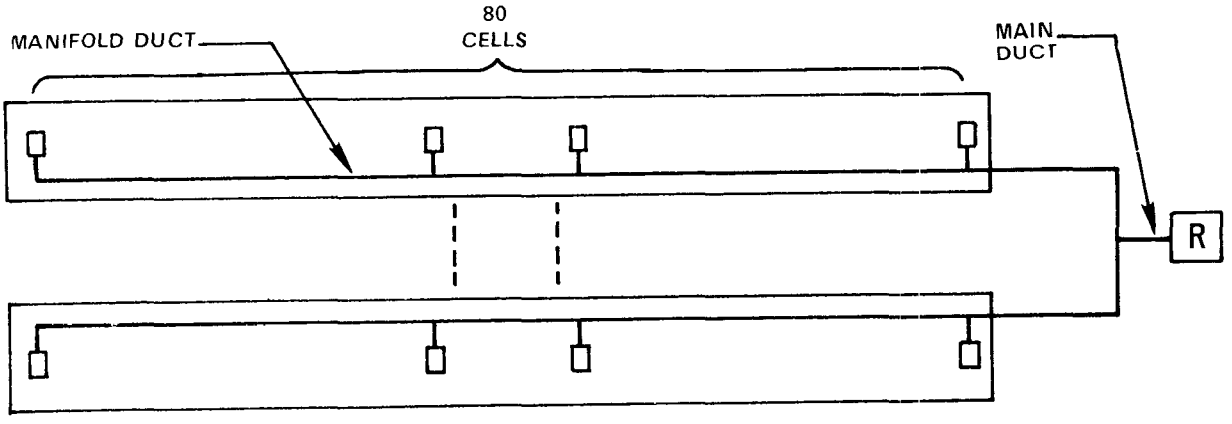

Figure 6-6. Primary collection systems: typical ducting layouts for a single HSS potline with 160 cells, 2 rooms (R indicate removal equipment).[19]

size. Table 6-8 shows the gas volume relationship to aluminum production capacity that was used in Section 7 to determine the required primary control equipment size,[20] and the sizes of the courtyard primary control device modules used as the bases for the cost estimates.[21] For comparison, Table 6-8 also shows the gas volume relationships and equipment capacities used for secondary control.[20,21] For an equivalent production capacity, secondary removal equipment must be larger by at least an order of magnitude.

Table 6-8. GAS VOLUMES AND CONTROL DEVICE MODULE SIZES FOR ECONOMIC IMPACT ANALYSIS[20,21]

	Cell type		
	Prebake	VSS	HSS
Gas volume to primary control device, 10^6 acf/ton Al	5.0	1.0	7.0
Primary control device module size Dry systems, acfm Wet systems, acfm	 100,000 82,000	 10,000 7,000	 - 70,000
Gas volume to secondary control device, 10^6 acf/ton Al	50	70	70
Secondary system equipment capacity, 10^6 acfm	10	10	10

Table 6-9 gives 1975 primary collection system capital costs for courtyard and central installations.[22] With a central layout, the ductwork is larger and longer, and thus more expensive.

For a specific retrofit, it is not possible to generalize as to which approach is more economical. Central installations are used when the courtyard is too narrow to install the primary removal equipment.

Table 6-9. CAPITAL COST COMPARISON BETWEEN COURTYARD AND CENTRAL PRIMARY COLLECTION SYSTEMS[22]
($/annual ton of Al at full capacity, new construction)
(December, 1975)

	CWPB		HSS	
	Courtyard	Central	Courtyard	Central
Cell hoods and branch duct	8.78	8.78	8.78	8.11
Manifold duct	15.46	35.44	25.45	48.85
Main duct	7.98	3.61	14.09	3.72
Total	32.22	47.83	48.32	60.68

Dry scrubbing systems--like the fluidized bed and injected alumina processes--require particularly wide courtyards. A courtyard that is 50 to 60 feet wide may be too narrow for retrofitted dry scrubbing equipment, but wide enough for retrofitted wet scrubbing equipment. Of the nine plants that EPA personnel visited in developing this document, the two that had courtyard-installed dry scrubbing retrofits had courtyards that were 100 to 150 feet wide.

Other considerations, such as flexibility by provision of duct interconnections for continued pollution control when part of a control system may be out of service, and the ease of cleaning deposits from the inside of ducting, may influence the design of ducting layouts. Maximum collection efficiencies are realized when the designs provide for continuous exhausting of all operating cells through removal equipment even when parts of a potline are being serviced, and when dampers are available to increase the air flow rate from a cell that may have part of its hooding removed for cell working or anode replacement (dual range ventilation). Duct pluggage is a problem in HSS potlines and in poorly operated VSS potlines because unburned hydrocarbon tars will condense in the ductwork.

6.2 POTROOM AND ANODE BAKE PLANT RETROFIT REMOVAL EQUIPMENT AND ITS PERFORMANCE

This section discusses potroom primary and secondary removal equipment, along with anode bake plant controls. Although the intent is to describe retrofit operation and performance, there is no known difference in the operation and performance of a specific piece of removal equipment on a new versus a retrofitted primary aluminum plant. Hence, the descriptions should apply to both new and retrofit installations. The removal equipment considered falls into three classes:

a. Dry scrubbing equipment suitable for potroom primary control.

b. Wet scrubbing equipment suitable for potroom primary control and anode bake plant control.

c. Wet scrubbing equipment suitable for potroom secondary control.

Finally, potroom and anode bake plant best retrofit performance is summarized. Evolution rates in Section 5.3 are combined with best retrofit collection and removal efficiencies in Sections 6.1 and 6.2 to show the overall effect on potroom total fluoride emissions. Evolution rates in Section 5.3 are combined with best retrofit removal efficiencies from an EPA contract study[1] to estimate controlled anode bake plant performance.

6.2.1 Potroom Primary Dry Scrubbing

Two types of dry scrubbing systems, fluidized bed and injected alumina, are discussed in the following subsections. These systems have been applied to many domestic and foreign plants. In addition,

one domestic company has been installing its own dry scrubbing system on two CWPB and two HSS plants. One of these HSS retrofits is retrofit case description plant A in Section 6.3.1. This dry scrubbing process is proprietary. However, operating conditions are similar to those of the fluidizied bed and injected alumina processes described below. Total fluoride removal efficiencies are projected to be 98-98.5 percent for the two CWPB plants and 97-98 percent for the two HSS plants.

6.2.1.1 Fluidized Bed -- Figure 6-7 is a flow diagram of the fluidizied bed dry scrubbing process. The fluidized bed dry scrubber employs a fluidized bed of sandy alumina to contact and chemically absorb HF in the cell gas followed by a baghouse to trap particulates. Floury alumina will not fluidize and, hence, is not suited for this process or for the injected alumina process.

Alumina is continuously fed to the reactor bed in amounts up to 100 percent of the potline feed requirements, and the reacted bed material overflows and is used as cell feed. Virtually all of the cell gas particulate is trapped in the fluid bed -- perhaps by electrostatic agglomeration. Fugitive particulate, primarily alumina, is stopped by a bag filter mounted over the reactor. The bags are cleaned intermittently, and the catch drops back into the fluid reactor bed.[23-26]

The vendor of the fluidized bed dry scrubber reports that, with proper operating and maintenance procedures, this system is capable of 98 percent particulate and 99 percent HF removal efficiencies on prebake potline effluents,[27] or about 98.5 percent on total fluoride.

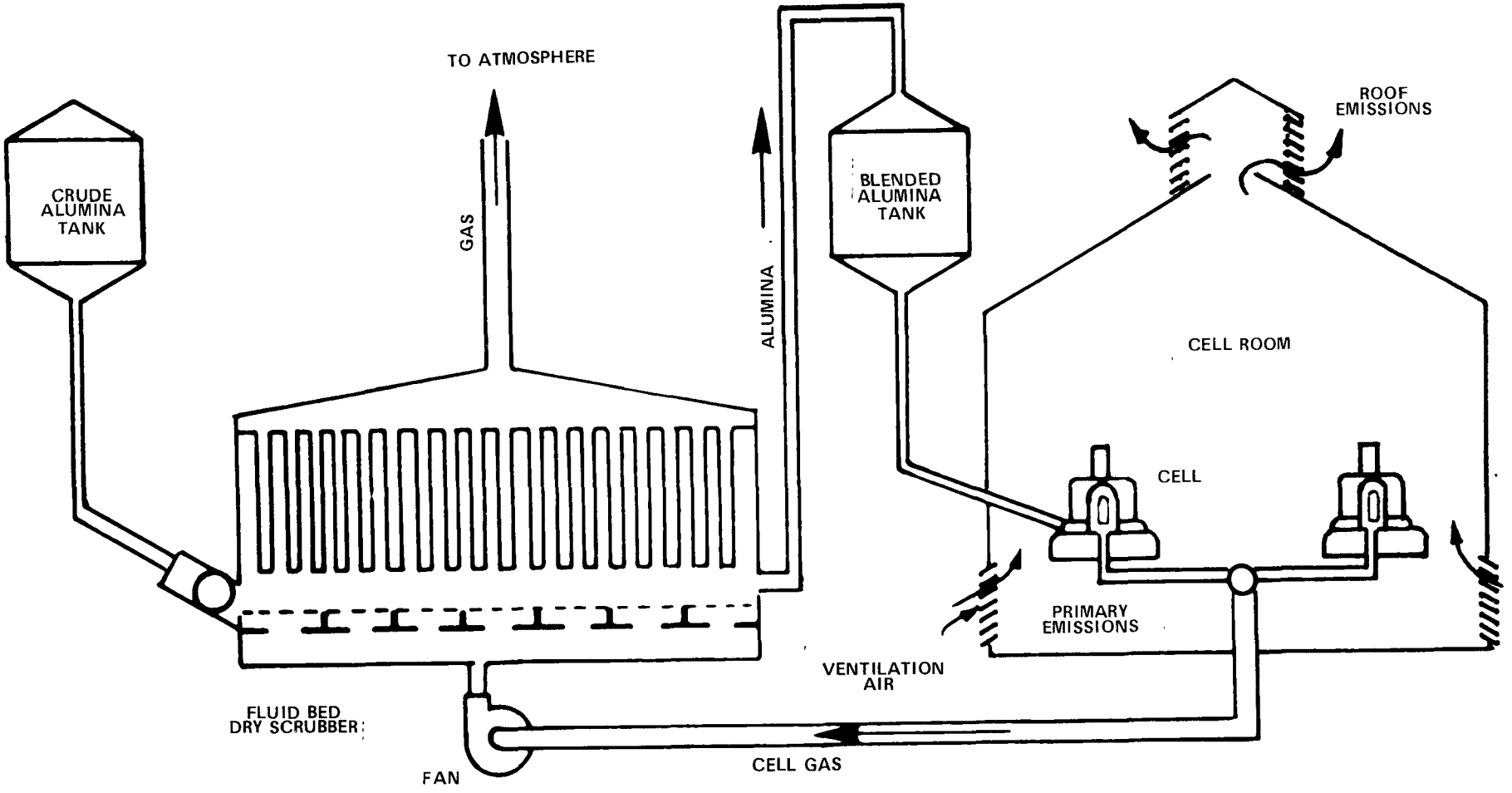

Figure 6-7. Flow diagram for fluidized bed dry scrubbing process.

The fluidized bed dry scrubber has been applied in foreign plants to VSS cell gases with pilot lights or other devices used to ensure that all burners are lit. The system has not been applied to HSS cell gases.[27] It has been installed in one domestic VSS plant with a projected removal efficiency of 98.8 percent.

Dry scrubbing processes afford much less cooling for the cell gas than wet scrubbing processes. Since conventional filter fabrics like Dacron or Orlon deteriorate above 275°F, the cell gas is usually delivered to the fluidized bed at 275°F or below.[25] Typical pressure drops are 8 to 10 inches of water across the fluidized bed and 4 to 5 inches of water across the baghouse.[3,28] A typical power requirement is 4.4 horsepower per thousand cubic feet per minute (hp/Mft^3-min).[29]

6.2.1.2 Injected alumina -- Figure 6-8 is a flow diagram of the injected alumina dry scrubbing process. The process is similar in concept to the fluidized bed -- reaction of gaseous fluoride with sandy alumina followed by baghouse collection of particulate -- except that the reaction occurs by injecting the alumina into the flowing gas stream rather than by passage of the gas stream through a fluidized bed. The reaction occurs in a matter of seconds.[3]

Alumina is continuously fed to the process in amounts up to 100 percent of the potline feed requirements. The removal efficiencies of the injected alumina process are similar to those of the fluidized bed. One major difference, however, is that loss of feed to the fluidized bed (Figure 6-7) will not result in a loss in removal efficiency for 8 hours thereafter because of the large alumina inventory in the fluidized bed. Loss of feed to the injected alumina process on

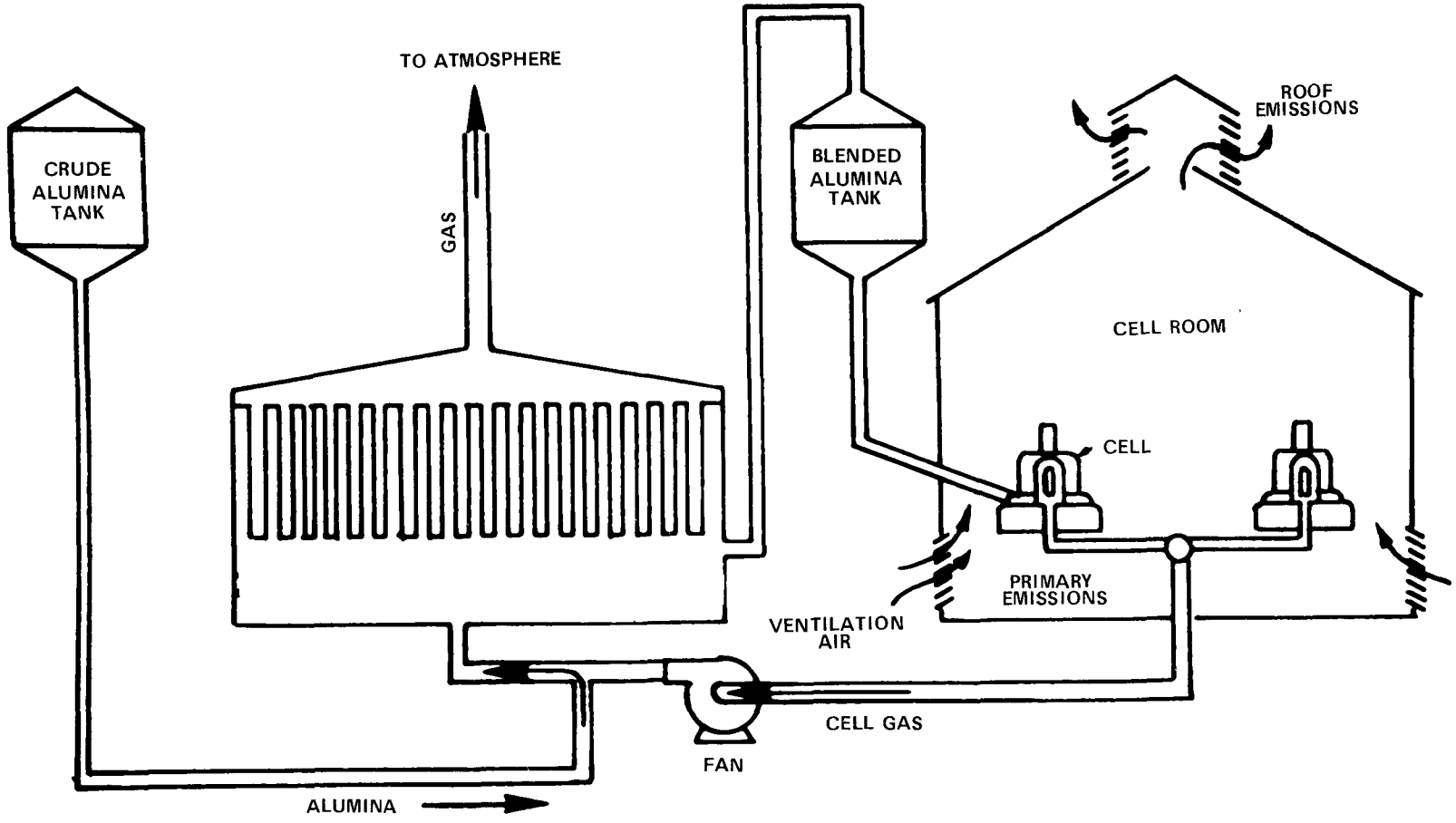

Figure 6-8. Flow diagram for injected alumina dry scrubbing process.

the other hand can quickly result in a loss in removal efficiency due to a low alumina inventory. Recycling a portion of the reacted alumina back into the cell gas stream provides some insurance against a total feed loss.

More than one vendor markets an injected alumina process designed for prebake potlines. An Alcan and a Prat-Daniel-Poelman design are explained in Section 6.3.3.

Cell gases from VSS potlines have higher concentrations of HF than prebake cell gases, and they may contain unburned tar fumes. Here again, alumina is injected into the flowing gas stream, but from this point on, the Alcan process is modified slightly. Provision is made to separate the bulk of the alumina containing adsorbed HF from the portion containing unburned hydrocarbons. The latter minor quantity of alumina is calcined to remove the tar prior to being returned to the cells along with the main portion of the collected alumina. This system does not require that all VSS cell burners be lit all the time.[30]

Comments on temperature limitations for the fluidized bed also apply to the injected alumina process. A typical pressure drop is 6 inches of water across bag filters operating at an air-to-cloth ratio of about 6 ft^3/min per square foot of filter area.[27] A typical power requirement is 2.2 hp/Mft^3-min.[29]

6.2.2 Potroom Primary and Anode Bake Plant Wet Scrubbing

A potroom primary wet scrubbing scheme that gives removal efficiencies comparable to dry scrubbing is the combination control of spray tower followed by wet ESP. This combination control is most frequently applied

to VSS and HSS plants. Dry scrubbing, spray tower-wet ESP or wet ESP-spray tower controls also effectively remove particulate and fluoride from anode bake plant exhaust. Since most of the latter fluoride is gaseous, the spray tower -- and not the ESP -- controls fluoride emissions.

6.2.2.1 Spray Tower -- The term spray tower is applied to gas scrubbing devices in which the gas passes through an enclosure at relatively low velocity and is contacted by water, alkaline liquor or limed water liquor sprayed from headers usually in counterflow with the gas. In pre-bake or HSS potline service, the units may range from 38,000 to 630,000 actual cubic feet per minute capacity and may spray from 1.7 to 10.0 gallons of liquor per thousand cubic feet of gas. A typical spray tower in prebake service uses water or limed water and consists of an open top redwood tower, 12 to 15 feet in diameter and 40 to 70 feet high, with cyclonic inlet breeching and a mist eliminator at the top. Liquor may be sprayed down from the top or at several elevations in the tower.[31]

Spray towers operate at a low pressure drop, typically 1 inch of water.[32] Typical power requirements are 0.4 to 0.9 hp/Mft^3-min for prebake service, 1.0 to 1.3 hp/Mft^3-min for VSS service, and 0.3 to 0.5 hp/Mft^3-min for HSS service.[29] Spray towers cool the cell gas stream to near ambient temperatures.

Properly operated and maintained spray towers can achieve removal efficiencies for potline HF in percentages ranging from the low to high nineties. Compared with other types of wet scrubbing equipment, spray towers show relatively low removal efficiency for fine particulates. Spray towers in HSS service appear to perform less efficiently than similar

scrubbers in prebake or VSS service. This has been suggested to be the result of an interference by the hydrocarbons in the wetting of the particulates and diffusion of HF to the spray droplets.[31]

Typical gaseous fluoride removal efficiencies are 95 percent for prebake potlines, 99 percent for VSS potlines, 93 percent for HSS potlines, and 96 percent for anode bake plant ring furnaces.[29,33] Typical particulate fluoride removal efficiencies are 80 percent for prebake potlines, 75 percent for VSS potlines, and 64 percent for HSS potlines.[33]

Additional information on spray towers can be found in many texts including references 32 and 34. Two points worth mentioning are:

1. As with any mass transfer unit, the added increase in fluoride removal efficiency drops off rapidly with each subsequent mass transfer stage; therefore, the attainment of fluoride removal efficiencies that are higher than those previously given is most difficult.

2. Exhaust from a redwood spray tower that is capped with a cone mist eliminator can be easily ducted to other control equipment (such as an ESP) downstream of the tower. On the other hand, it is difficult to cap redwood towers that were not originally designed with caps. Such capping is necessary in ducting the exhaust to downstream control equipment.[4]

6.2.2.2 Wet Electrostatic Precipitator (ESP) - - The electrostatic precipitator is a relatively large chamber through which cell gas streams pass at low velocity, usually 3 to 5 feet per second (ft/sec). In its usual form, high negative voltage corona discharge wires are suspended

across the air stream and grounded collector plates form parallel passageways for the air. The ionizing field surrounding the discharge wires ionizes part of the gas stream and imparts electric charge to most particles, some positive but most negative. Positively charged particles migrate toward the discharge wires and negatively charged particles migrate to the grounded collection plates. When collected particles lose their charges, they tend to agglomerate and collect on the surface.

The removal efficiency of electrostatic precipitators for many kinds of particulate is improved if the entering gas is conditioned by raising its moisture content. When applied to VSS or HSS potlines, precipitators are usually preceded or followed by a spray tower that removes most gaseous fluoride. Spray towers preceding precipitators also condition the gas. However, for some HSS retrofits, space limitations and requirements for balanced ducting layouts have necessitated removal of the spray towers that would have otherwise preceded the ESPs. In these instances, effective gaseous fluoride control and conditioning is achieved by a scrubbing section in the ESP inlet.

Electrostatic precipitators fall into two categories: dry ESPs where the collected particulates are knocked off the plates and wires by mechanical rapping to be gathered dry in a hopper; and wet ESPs where the plates and wires are washed with falling water or electrostatically collected mist with the particulates removed as a slurry. A dry ESP followed by a spray tower is not widely applied as primary equipment for Soderberg cells since it does not prevent the emission of a blue hydrocarbon haze.

Unlike many types of control equipment, electrostatic precipitators may be designed for almost any selected efficiency. By using

conservative design dimensions, by controlling humidity of the incoming gas, and by operating at high voltage, both wet and dry precipitators can achieve 98 to 99 percent removal of potline cell gas particulates.[35] Total fluoride removal efficiencies for scrubber-wet ESP controls vary from 99.2 to 99.9 percent on domestic VSS plants, and from 95 to 99 percent on domestic HSS plants.

Electrostatic precipitators operate at a pressure drop of less than 1 inch of water. Typical power requirements for the wet ESP are 0.66 to 1.36 hp/Mft^3-min for VSS service and 1.4 hp/Mft^3-min for HSS service.[29] Liquor requirements are 5 to 10 gal/Mft^3 of gas.[29] Because wet ESPs are usually preceded by a wet scrubbing device, they operate at near ambient temperatures in potline service. For anode bake plant service, a typical power requirement is 3.8 hp/Mft^3-min, and typical liquor requirements are 0.3-0.4 gal/Mft^3 of gas.[29]

Additional information on ESPs can be found in many texts including references 35,36, and 37. Three points worth mentioning are:

1. The design of the ESP should insure that the plates are not likely to warp in service. Such warping will cause the affected sections to short out with a resultant loss in removal efficiency.
2. The design of the ESP should insure that the plates do not develop dry spots and short out. One plant reports that this problem was overcome by installing internal sprays to continuously irrigate the plates.[3]
3. Wet ESPs in potline service are subjected to corrosive operating conditions. For this reason, the ESP internals are

usually of stainless steel construction, and the interior steel shell walls are lined or coated. Steel ESPs are likely to corrode rapidly unless the composition and pH of the feed liquor are carefully controlled.[3]

6.2.3 Potroom Secondary Wet Scrubbing

For practical purposes, choice of potroom secondary control is limited to the spray screen scrubber. The term spray screen scrubber is applied to wet scrubbing equipment in which the liquor is sprayed into a gas stream and on to screens or open mesh filters enclosed in a plenum chamber. The assembly also usually includes a mist eliminator. Gas flow may be powered by exhaust fans, or may be moved by unpowered convection. Figures 6-9 through 6-12 illustrate several designs of spray screen scrubber installations that have been used in the primary aluminum industry.[38-41] The particulate removal mechanisms are inertial impaction on and interception by the liquid droplets or filters. The gaseous removal mechanism is absorption into the liquid droplets.

The low gas pressure drop across spray screen scrubbers and their relatively low power cost recommends them for secondary, or potroom, scrubbing service. For secondary prebake service, typical power requirements are 0.3 to 1.0 hp/Mft^3-min and typical liquor requirements are 3 to 10 gal/Mft^3 of gas.[29]

Table 6-10 gives total fluoride secondary removal efficiencies for spray screen scrubbers at six existing U.S. plants.[3,13,17,42,43] Without primary control, all the fluoride generated at the cell is directed to the secondary scrubbers that remove 80-85 percent of the total

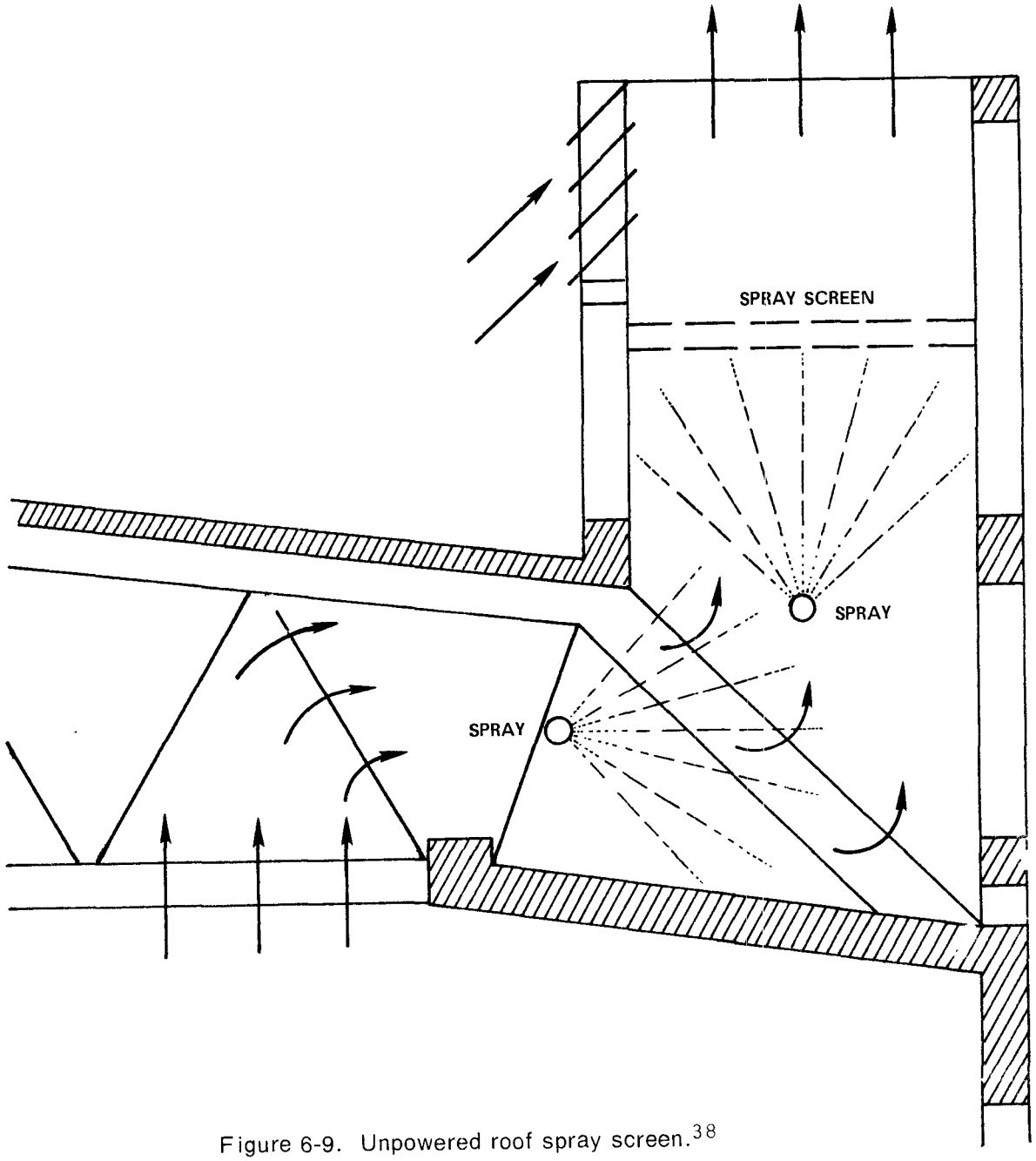

Figure 6-9. Unpowered roof spray screen.[38]

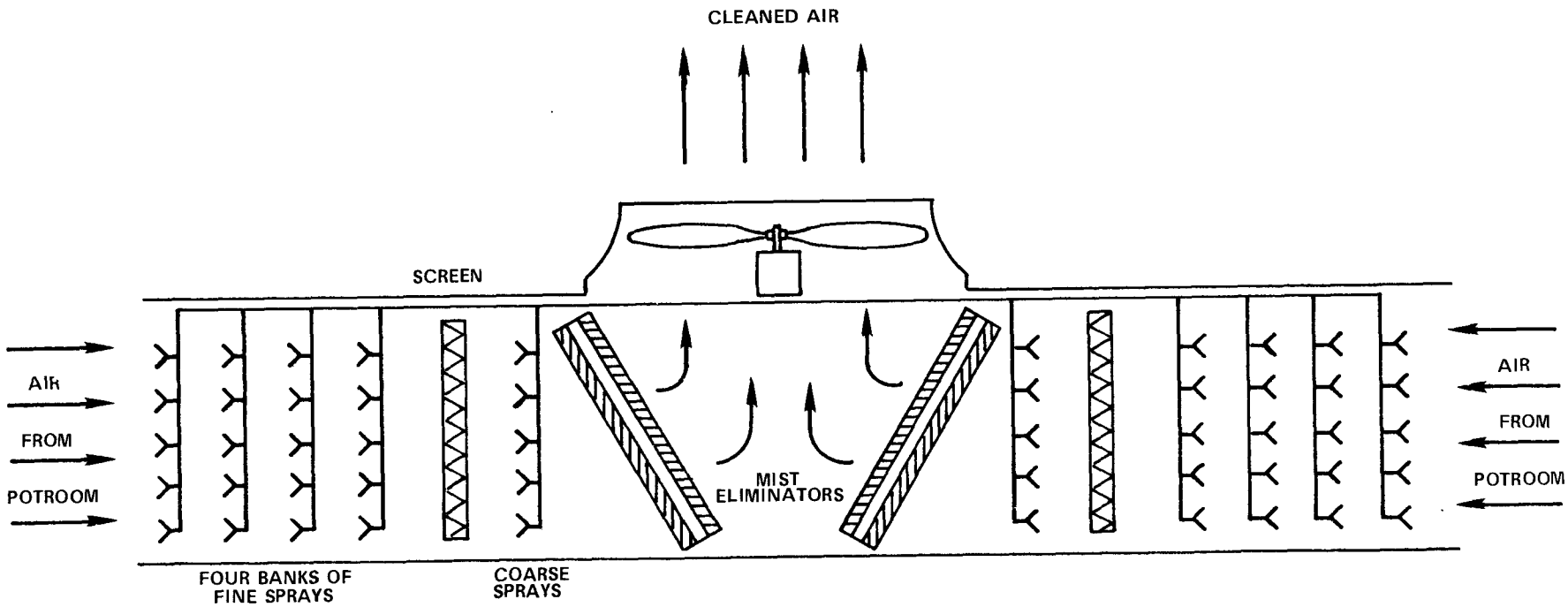

Figure 6-10. Powered potroom spray screen scrubber. [39]

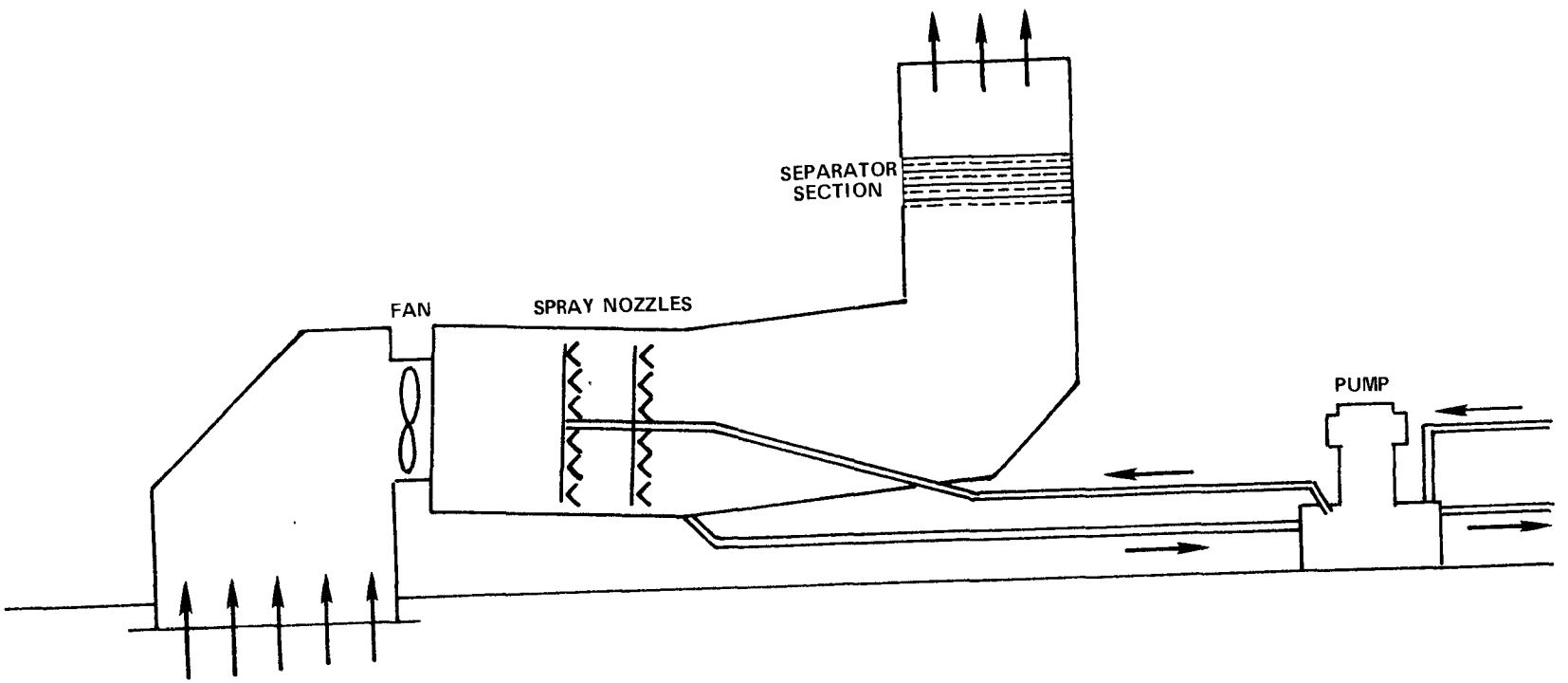

Figure 6-11. Powered spray screen scrubber.[40]

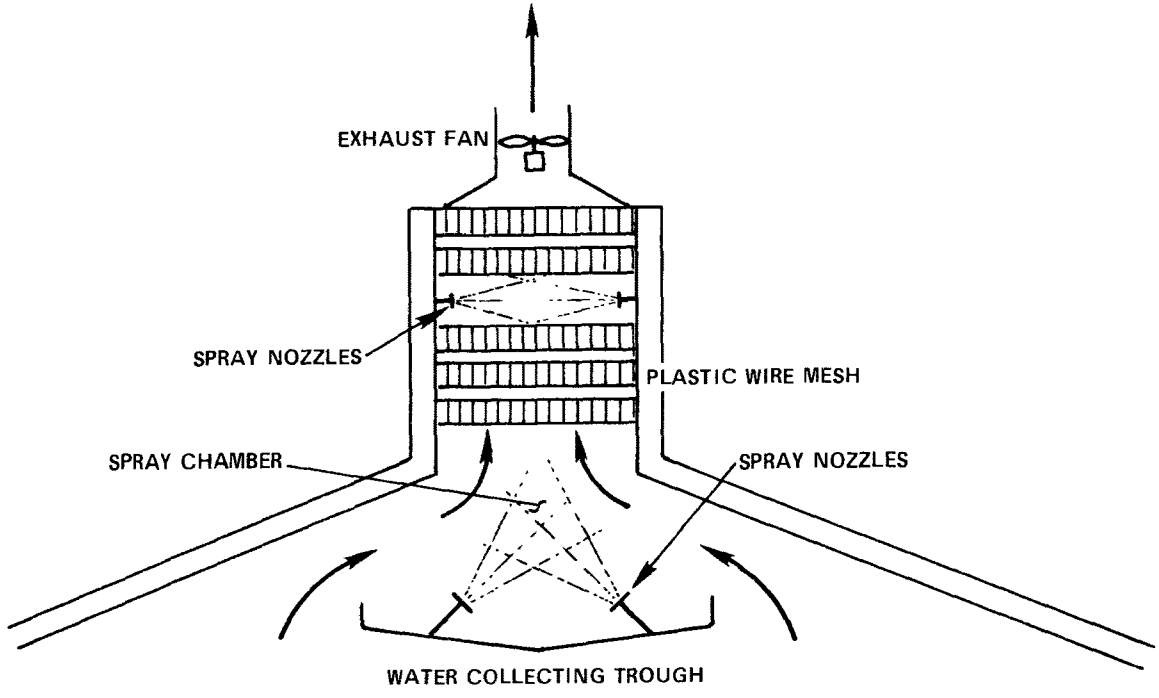

Figure 6-12. Powered monitor spray screen scrubber.[41]

Table 6-10. PERFORMANCE OF SPRAY SCREEN SECONDARY SCRUBBERS AT SIX EXISTING PRIMARY ALUMINUM PLANTS

Cell Type[a]	Total Fluoride Secondary Removal Efficiency (%) Without Primary Control	With Primary Control
SWPB	80	87
SWPB	-	71[b]
SWPB	85.5	-
VSS	-	75
VSS	-	75
VSS	-	80[c]

[a]SWPB - side-worked prebake; VSS-vertical stud Soderberg.

[b]Projection based upon limited testing.

[c]Projection based upon detailed contractor study.

fluoride. With primary control at SWPB and VSS plants, only 10-20 percent of the fluoride generated at the cell escapes the hooding and is directed to the secondary scrubbers. At this reduced fluoride loading, Table 6-10 shows that the scrubbers have a removal efficiency of 75-80 percent, on the average. The two secondary scrubber efficiency readings of 80 and 87 percent for the SWPB plant - first line of table - were taken at different times, and emission variability and sampling error are factors to help explain why the two efficiency figures seem reversed; i.e., the secondary efficiency should be higher without primary control. However, the 87 percent reading was the result of 93 tests,

24 hours per test, and 3 tests per week. At this same time, 92 similar tests showed a primary collection (hooding) efficiency of 83 percent. Thus, the value of 87 percent for secondary removal efficiency in the presence of primary collection seems firmly supported. In addition, one aluminum company had plans to build a new CWPB plant that included primary control and spray screen scrubber secondary control.[44] They anticipated achieving a 98 percent primary collection efficiency, so that only 2 percent of the fluoride generated at the cell would be directed to the secondary scrubbers. At this very low loading, they projected a secondary removal efficiency of 75 percent.[45] Hence, based on this plant's projected performance and Table 6-10, a secondary removal efficiency of 75 percent should be achievable at almost all plants adding on secondary control to existing primary control.[46] Although the above mentioned plant was not built, it was proposed to a State that has extremely strict fluoride emission limitations, and was based on designs by a major engineering firm that is highly experienced in the design of aluminum plants and their emission controls. It is therefore clear that both the aluminum manufacturer and the designer were confident that their proposed secondary scrubber could achieve 75 percent total fluoride removal <u>after</u> primary control.

In practice, a scrubber designer would balance costs of the simultaneous addition of packing depth and wash water flow increase; both of these design factors work to produce increased fluoride removal efficiency. An additional factor is, that coarser particulate sizes are the easier to remove by water scrubbing; addition or improvement of primary hooding tends to preferentially remove the fine particulate from the secondary

stream, thus shifting the size distribution to the larger sizes which are much easier to scrub out in the secondary scrubbers.

Obviously, either increased packing depth or increased wash water flow adds to costs. This is why secondary retrofits should not be required in most locations (See Section 8.3) and then only if there is a fluoride problem and costs are balanced against fluoride reduction benefits. In addition, secondary scrubbing is rather energy intensive.

Although more sophisticated scrubbing devices, such as the cross-flow packed bed scrubber, can achieve higher removal efficiencies for both particulates and HF than does the spray screen,[47] the costs are 30 to 100 percent greater and the cost effectiveness much lower when applied to secondary treatment. It is the consensus of the industry that, for secondary treatment in combination with primary control, the cost differential would be more effectively invested in improved primary collection and removal equipment. Among the alternative secondary scrubbers only the spray screen is considered economically feasible.

Two points worth mentioning are:

1. Although many plants with secondary scrubbing use once-through water, tighter effluent regulations will require that the water be treated and recycled. Recycled treated water has the added advantage of inhibiting corrosion.
2. Although Figure 6-9 through 6-12 show secondary equipment located on the roof, the potroom roof at many plants may not support the equipment. This may be particularly true in northern plants that are subjected to heavy snowfalls. Installing secondary controls in the courtyard may be time-consuming and more expensive than installing them on the potroom roof.[4]

6.2.4 Summary of Best Retrofit Performance

6.2.4.1 Potrooms -- Table 6-11 shows the effects of various degrees of emission control on total particulate and gaseous fluoride potroom emissions. For all four cell types, typical upper and lower evolution limits and averages are given, each based on actual values reported in Table 5-2. Best retrofit primary collection efficiencies are taken from Section 6.1, an upper and a lower limit being given for all cell types except CWPB. Best retrofit primary removal efficiencies are taken from Sections 6.2.1 and 6.2.2, an upper and a lower limit being given for both Soderberg cell types. Best retrofit secondary removal efficiency is taken from Section 6.2.3.

Table 6-11 shows that CWPB plants with or without secondary control consistently achieve lower average fluoride emissions than do other cell types. However, CWPB emissions without secondary control are matched at those HSS plants that achieve the upper limits of primary collection and removal; also, HSS and VSS plants having such upper limits and additional secondary control perform comparably to CWPB plants, but SWPB plants do not.

The emissions in Table 6-11 bracket the performance of individual plants, but any given emission does not necessarily correspond to that of any specific plant. Known and projected emissions for some actual plants with best primary and secondary control are given in Table 7-3. In addition, Section 6.3.4 gives capsule retrofit descriptions for ten actual retrofits including the after-retrofit emissions.

Table 6-11. PERFORMANCE OF BEST RETROFIT EMISSION CONTROLS FOR PRIMARY ALUMINUM POTROOMS

	With or Without Secondary Control			Without Secondary Control	With Secondary Control	
Cell Type	Average Fluoride Evolution, Lb F/Ton Al	Primary Collection Efficiency, %	Primary Removal Efficiency, %	Average Fluoride Emission, Lb F/Ton Al	Secondary Removal Efficiency, %	Average Fluoride Emission, Lb F/Ton Al
CWPB	25	95	98.5	1.61	75	0.67
"	40	"	"	2.57	"	1.07
"	65	"	"	4.18	"	1.74
SWPB	35	85	98.5	5.70	75	1.76
"	"	80	"	7.42	"	2.17
"	45	85	"	7.32	"	2.26
"	"	80	"	9.54	"	2.79
"	55	85	"	8.95	"	2.76
"	"	80	"	11.66	"	3.41
VSS	30	90	99.9	3.03	75	0.77
"	"	"	98.5	3.40	"	1.16
"	"	75	99.9	7.52	"	1.90
"	"	"	98.5	7.84	"	2.21
"	45	90	99.9	4.54	"	1.17
"	"	"	98.5	5.11	"	1.73
"	"	75	99.9	11.28	"	2.85
"	"	"	98.5	11.76	"	3.32
"	55	90	99.9	5.55	"	1.42
"	"	"	98.5	6.24	"	2.12
"	"	75	99.9	13.79	"	3.48
"	"	"	98.5	14.37	"	4.06
HSS	30	95	99.0	1.78	75	0.66
"	"	"	96.0	2.64	"	1.52
"	"	85	99.0	4.76	"	1.38
"	"	"	96.0	5.52	"	2.14
"	35	95	99.0	2.08	"	0.77
"	"	"	96.0	3.08	"	1.77
"	"	85	99.0	5.55	"	1.61
"	"	"	96.0	6.44	"	2.50
"	45	95	99.0	2.68	"	0.99
"	"	"	96.0	3.96	"	2.27
"	"	85	99.0	7.13	"	2.07
"	"	"	96.0	8.28	"	3.22

6.2.4.2 Anode Bake Plants -- Table 6-12 shows the average evolution, best retrofit removal efficiency, and resultant emissions for gaseous, particulate and total fluoride at anode bake plants. All of the quantities are expressed as pounds of pollutant per ton of aluminum produced, not per ton of carbon anode produced. The evolution rates in Table 6-12 are the same as those for ring furnaces shown in Table 5-4. Hence, they are intermediate between uncontrolled total fluoride emission factors of 1.6 lb/ton representing poor cleaning of the anode butts and of 0.4 lb/ton representing proper cleaning. The removal efficiencies are taken from the EPA contract study.[48]

By comparing Table 6-12 with Table 6-11, it can be seen that the best retrofit anode bake plant total fluoride emission is much less than the best retrofit potroom total fluoride emissions. Total fluoride emissions from CWPB, VSS and HSS potrooms that have secondary control, lowest possible evolution rates, and best possible primary collection and removal efficiencies are about the same as uncontrolled total fluoride emissions from anode bake plants.

Table 6-12. SUMMARY OF ANODE BAKE PLANT BEST RETROFIT PERFORMANCE

	Average Evolution, lb/ton Al	Removal Efficiency, %	Average Emissions, lb/ton Al
Gaseous Fluoride	0.816	95	0.041
Particulate Fluoride	0.044	80	0.009
Total Fluoride	0.859	94.2	0.050

6.3 RETROFIT CASE DESCRIPTIONS

This section contains three case descriptions of actual potline retrofits underway or completed in the United States as of the summer of 1973. These case descriptions are for best retrofit controls for specific plants and are not necessarily representative of the industry. The section contains descriptions, engineering information, performance results, and cost data for actual retrofits. Since it is unlikely that any two aluminum plants will face the same problems in retrofitting, one of the objectives of this section is to make the States aware of many of the varying problems that different plants may encounter. No attempt has been made to match these case descriptions with the control equipment specified in Section 6.2 or to include all types of cells and control equipment.

Instead, engineering descriptions of actual retrofit emission controls at three primary aluminum plants are presented. Each case includes a description of control units, ductwork, supports, fans and other accessories, along with practical considerations such as interferences, spatial relationships, and procurement and construction difficulties. Capital and operating costs are accompanied by the overall fluoride reductions obtained by the expenditures outlined. The result is a description of some retrofit controls, each of which is practical for its plant and for its owners and each of which will meet the performance described. For a process as complex as a primary aluminum plant, it is evident that a <u>retrofit</u> control must be tailor-made and should not be generalized as to costs or even as to method of emission control.

The coverage of the three detailed retrofits in this section is primarily based upon a trip report covering visits to several primary aluminum plants[3] plus supplementary drawings, emission estimates, and cost data subsequently provided by the plants visited. Most of the drawings are considered proprietary in nature and hence are not referenced in the case descriptions. Retrofits under construction are described for mid-1973, but estimated construction lead times, completion dates, emission data, and costs have been updated.

Following the three detailed case descriptions is a subsection containing capsule descriptions of the three retrofits and of retrofits at seven other plants. The presentation includes a summary of the actual retrofit emission reductions and costs for the ten plants.

Although EPA conducted source tests at several retrofitted plants in developing the data base for the standard of performance for new primary aluminum plants, most of the detailed and capsule descriptions are for plants other than the ones tested. Furthermore, descriptions are not given for all the plants tested by EPA. The lettered plant codes in the case description are not meant to correspond to those in the background document for the new plant standards of performance.[2] Whenever possible, emission data furnished by the companies have been included with the ten case descriptions contained herein.

6.3.1 Plant A--HSS Cells--Primary Dry Scrubbing Retrofit[49]

This plant has three operating HSS potlines (lines 1, 2 and 4) with wet scrubbers presently used for primary emission control. Plans are to retrofit the primary exhaust with two dry scrubbing systems, one for lines 1 and 2 and one for line 4. The potlines have no secondary control and none is planned.

Dry scrubbing has not previously been installed for HSS primary control in the United States because of the inherent plugging tendency of the unburned hydrocarbons in the primary exhaust. Nevertheless, tests on a company prototype have shown that the system planned for plant A effectively removes fluoride, particulate, and hydrocarbon from the primary exhaust. However, the long-term effect on metal purity and potline operation when using the recovered materials in a "closed loop" system is not yet known.

Potline operation, present controls, and the planned retrofit are now described, first for lines 1 and 2 and then for line 4. Next the present emissions and the emissions expected after total retrofit are presented. Finally, capital and annual operating costs for the total retrofit are estimated.

6.3.1.1 Engineering Description - Lines 1 and 2

6.3.1.1.1 Potline operation -- Lines 1 and 2 have a total capacity of 40,000 short tons of aluminum per year (ton/year). Each line has 120 cells set in four rows in one potroom, 30 cells per row. The lines were built in 1942 and the present primary controls were installed in 1951.

The cells in lines 1 and 2 are unique in that their anodes are channel-less. The casing remains stationary, much as in a VSS cell. The current-carrying studs move downward with the anode by means of vertical slots in the casing. Anode weight limits usage of this design to small HSS cells.

The cells in lines 1 and 2 have total-enclosure hooding with hood doors extending the full length of both sides of the cell. A mechanized time-feed system adds alumina to the cells with the hood doors closed. This system consists of four sets of vertical crust punchers and alumina feeders, two sets on each side of the cell. At preset time intervals, the puncher makes a hole in the crust and the feeder immediately dumps alumina into the hole. The result of this system is that over 90 percent of the alumina is fed with the doors closed and the cell doors are only open an average of 8 minutes per cell-day. The cell doors do have to be opened to work both sides of each cell every 24 hours and to raise the flexible current connectors and pull the bottom row of studs every 10 to 12 days. They also have to be opened every 24 hours to tap the molten aluminum from beneath the cryolite bath.

6.3.1.1.2 Present controls -- Two ducts, one on each end of each cell, pick up the primary exhaust from the top of the cell hooding enclosure and carry it to a circular manifold duct. Primary exhausts from 15 cells (half of one row) are manifolded together. Total manifold exhaust is 30,000 acfm at 150°F, or 2000 acfm per cell.

Each manifold originates in the middle of the potroom and grows in size from a diameter of 2 feet to a diameter of 4 feet as it proceeds to a fan that is outside on the end of the potroom. Each fan is driven by a 100-hp motor and is upstream of a redwood spray tower. Hence, lines 1 and 2 have a total of 16 towers, 4 on each end of each potroom. Each tower is capped with an inverted cone that serves as a mist eliminator. The capping was strictly for design purposes, and there was never any intention of adding on control equipment downstream of the towers at a later date.

The plant has experienced emission control problems on lines 1 and 2 because of improper hood sealing and duct pluggage. The cell cathode shells tend to bow down in the center of the sides due to lack of proper structural support. This tendency makes effective sealing of the hood doors difficult. Duct pluggage is caused by the hydrocarbons present in an HSS primary exhaust and by the fact that the ducts in lines 1 and 2 are retrofitted and contain design flaws.

6.3.1.1.3 Aqueous waste -- Water passes once through the spray towers and, along with the water discharged from the scrubbers on line 4, goes to water treatment. At the water treating facility, water from the scrubbers is fed to a circular, ground-level, open-top reactor tank about 25 feet in diameter. Lime is added as a slurry from an elevated 14-foot by 25-foot tank. The water is continuously mixed and bled off to a second circular, ground-level, open-top tank for continued mixing and reaction but no lime addition. This second

tank discharges to a large pond for solids settling. About three-fourths of the water is pumped out of the pond and recycled, and about one-fourth is discharged to a nearby waterway. The effluent discharged to the waterway has a pH of 6.8 to 7.0.

Upon conversion of the potlines to dry scrubbing, no scrubbing water will be discharged from the plant. The existing water treating facility, consisting of reactor tanks and a settling pond, will remain to handle the plant's cooling water, but there will be no lime treating.

6.3.1.1.4 Planned retrofit -- The two potrooms comprising potlines 1 and 2 are oriented in a north-south direction. The 60-foot width of the courtyard between the potrooms will not permit courtyard installation of the control equipment. The planned retrofit consists of ducting all the primary exhaust from lines 1 and 2 to 18 dry scrubbers located together in an area north of the potrooms. This is termed a central, as opposed to a courtyard, installation.

Figure 6-13 is a layout of the retrofit for lines 1 and 2. Table 6-13 lists the major retrofit items. The ductwork inside the potrooms will remain unchanged, and the existing fans and spray towers will be bypassed. The two circular ducts listed as item 1 in Table 6-13 will pick up the exhaust from the eight manifolds servicing the south halves of both potrooms and convey it north between the potrooms. A new damper will be required at the end of each manifold.

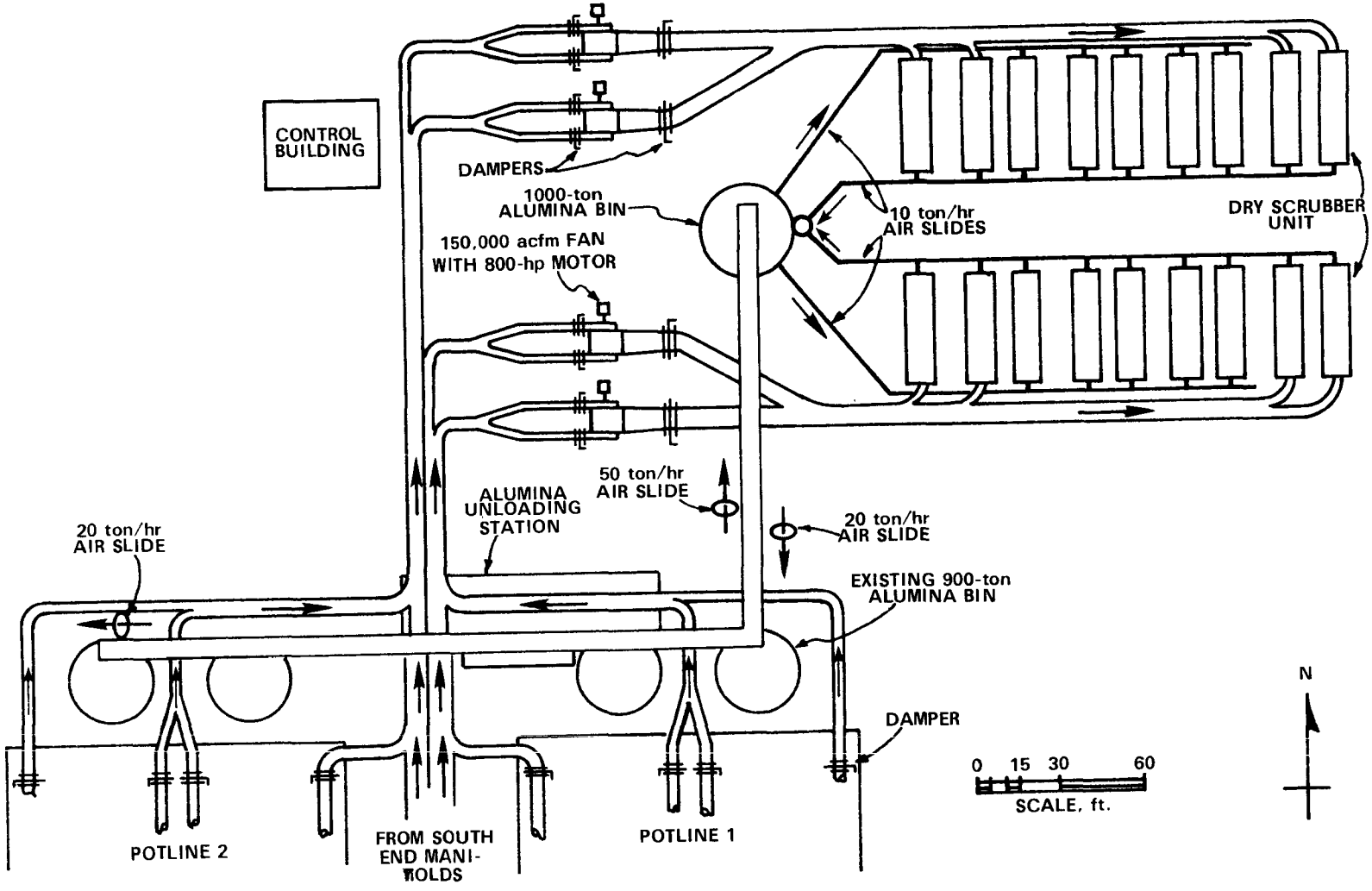

Figure 6-13. Retrofit layout -- plant A -- lines 1 and 2.

Table 6-13. MAJOR RETROFIT ITEMS--PLANT A--LINES 1 AND 2

1. Two circular elevated mild steel ducts, each 8 feet in diameter and 700 feet long, convey primary exhaust from the south halves of potlines 1 and 2 to the retrofit area north of the potlines. Each duct is designed to handle 150,000 acfm of exhaust at 180°F.

2. Four fans, each driven by an 800-hp motor, designed to handle 150,000 acfm of exhaust at 180°F and 26 inches of water total pressure drop. Each fan has two inlet dampers and one outlet damper.

3. Two ground-level rectangular mild steel ducts, each about 200 feet long. Each duct feeds nine reactor-baghouse dry scrubbing units, reducing in size from a height of 13 feet and a width of 6 feet to a height of 4 feet and a width of 2 feet.

4. Eighteen mild steel reactor-baghouse dry scrubbers, set in two rows of nine each. Each scrubber is a rectangular box, 11 feet by 42 feet and 15 feet high. The top of each scrubber is 40 feet above the ground. Each scrubber has four compartments. Each compartment has a gas inlet section shaped like an inverted rectangular pyramid on the bottom and a stack on the top, or a total of 72 stacks for the 18 scrubbers. The stacks are 15 feet high, discharging 55 feet above the ground. Each scrubber is designed to handle 40,000 acfm of exhaust at 180°F. The baghouses on each scrubber are cleaned by air pulse, requiring 90 psig compressed air. Each scrubber requires one damper in the inlet gas line, air activated gravity alumina feed and discharge devices, and five manually operated alumina shut-off gates.

5. Alumina unloading station containing a hopper with screen to receive alumina from railroad dump cars. The station is located immediately north of the potrooms.

6. Combination mild steel air slide about 400 feet long. It is designed to simultaneously convey 50 ton/hr of fresh alumina from the new unloading station to the new fresh alumina storage bin and 20 ton/hr of reacted alumina from the scrubbers to the four existing 900-ton reacted alumina storage bins that are located at the north ends of the potrooms. Each end of the air slide is preceded by an equivalently-sized air lift.

7. Mild steel 1000-ton fresh alumina storage bin located near the 18 dry scrubbers with high, intermediate, and low level bin indicators. The bin is circular, 38 feet in diameter, with conical top and bottom. Straight side height is 19 feet. The bottom of the bin is 45 feet and the top is 95 feet above the ground.

Table 6-13 (continued). MAJOR RETROFIT ITEMS--PLANT A--LINES 1 AND 2

8. Two 10 ton/hr mild steel air slides, each slide conveying alumina to nine dry scrubbers and equipped with a flow control valve and a manually operated shut-off gate. Total length of each slide is about 230 feet.

9. Two 10 ton/hr mild steel air slides, each slide conveying reacted alumina from nine scrubbers to an activator tank that services both air slides and feeds the 20 ton/hr air slide in item 6. Total length of each slide is about 190 feet.

10. Three small cylonic dust collectors for alumina transfer and storage operations.

11. A 30- by 40-foot control building with a power substation.

At the north end of the potrooms, exhaust from the eight manifolds servicing the north halves of both potrooms joins the two central ducts as depicted in Figure 6-13. A new damper will be required at the end of each manifold. The central ducts cross a plant roadway and lower into rectangular ducts 7 feet wide and 13 feet high. Each of these ducts handles the total primary exhaust from one potroom of 300,000 acfm at 180°F. Each duct splits and feeds two of the four fans installed on a north-south axis. As shown in Figure 6-13, the two north fans move exhaust from potline 2 to feed the nine dry scrubbers on the north side; while the two south fans handle potline 1 and feed the dry scrubbers on the south side.

The per-cell primary exhaust rate on lines 1 and 2 should increase from 2000 acfm at 150°F to 2500 acfm at 180°F. Hence, the primary collection efficiency on lines 1 and 2 should increase. The ducts inside the potrooms are undersized for handling the increased flowrate, resulting in a high fan pressure drop requirement and a resultant increased power cost. However, it was considered to be more economical to leave the internal ducts unchanged.

Dry scrubbing involves reaction of gaseous fluoride with alumina followed by baghouse collection of fluoride and non-fluoride particulate. The scrubbers are sized so that any one in a set of nine can be off-line at a given time and the remaining eight will still handle the 300,000 acfm exhaust.

Considerable solids handling is involved in the retrofit. Presently each of the four existing 900-ton alumina storage bins has its own small alumina unloading station. A new larger alumina unloading station is needed to supply fresh alumina to the dry scrubbers. The existing stations will be left as a backup. The percentage of the alumina cell feed that will have to pass through the dry scrubbers is not known, but all of the solids handling equipment is being designed for 100 percent feed. Alumina will normally pass once through the scrubbers before being fed to the cells, although it will be possible to recycle alumina from two of the four reacted alumina storage bins to the fresh alumina storage bin. It will also be possible to unload fresh alumina directly to the four reacted alumina storage bins. All of the air slides will be operated by blowers.

The fans, the fresh alumina storage bin, and the dry scrubbers will occupy an area roughly 350 feet long by 150 feet wide. To accomodate the equipment, a 25-by 100-foot engineering building had to be torn down, an existing well had to be covered, and some power lines had to be moved. The existing control equipment will be left in place until the tie-in to the dry scrubbers is made and will then be removed.

Retrofit items that are common to lines 1 and 2 and to line 4 are:

1. A 25- by 100-foot bag rehabilitation building.

2. A 45- by 50-foot compressor building to supply compressed air to the baghouse (cleaned by air pulse).

3. A crane to remove the baghouse internals for maintenance.

The funding for the retrofits for lines 1, 2 and 4 was approved in July 1972. The retrofit for lines 1 and 2 just discussed was operating in September 1974. The retrofit for line 4 to be discussed in the next section was operating in July 1974. Hence total installation took 26 months.

6.3.1.2 Engineering Description - Line 4

6.3.1.2.1 Potline operation -- Line 4 has a capacity of 40,000 ton/year for a total plant capacity of 80,000 ton/year. Line 4 has four rows of 160 cells in two potrooms, or two 40-cell rows per potroom. The line was completed in 1969 with a centralized primary control system. The cells in line 4 are larger than those in lines 1 and 2, and the anodes have channels.

The cells in line 4 have total-enclosure hooding with hood doors extending the full length of both sides of the cell. A mechanized feeding system operates with the hood doors closed. However, rather than operating at preset time intervals, the potline is computer-controlled, alumina being added on a demand basis. There are four crust punchers and four alumina feeders, two to a side, and the puncher and feeder are both in one vertical mechanism. Seventy percent of the alumina is fed with the doors closed and the cell doors are only open an average of 8 minutes per cell-day. As in lines 1 and 2, the cell doors have to be opened to work the cells, pull the studs, and tap the aluminum.

6.3.1.2.2 Present controls -- Every cell has a duct at each end that carries the primary exhaust from the top of the cell hooding enclosure to a circular manifold duct. Primary exhaust from 10 cells -- 25 percent of one cell row -- is manifolded together. These are a total of 16 cell gas manifolds for line 4. The exhaust rate is 4400 acfm per cell at 180°F.

The two potrooms in line 4 are west of lines 1 and 2 and are also oriented in a north-south direction. The control equipment for line 4 is southwest of the line 4 potrooms and constitutes a central installation. Two elevated circular steel ducts running south along the west side of the westernmost potroom pick up the sixteen 4-foot manifold ducts, four at a time. Each set of four pickups consists of one manifold from each of the four cell rows in the potline. The elevated ducts increase in size from a diameter of 6 feet to a diameter of 10 feet as they proceed south. The two ducts jointly handle all of the exhaust from the preceding manifolds.

Near the south end of the potroom, each elevated circular duct divides in two, turns west, and lowers to a pair of ground-level fans. The four fans are installed on a north-south axis as shown in Figure 6-14. Each fan is driven by a 500-hp motor and is rated at 218,000 acfm, a capacity exceeding the 4400 acfm per cell exhaust rate. Flow is dampered during normal dual-fan operation, and if one fan is not operating, the exhaust rate only drops 30 to 40 percent in the respective feeder duct, not 50 percent.

Exhaust from each pair of fans is recombined into a rectangular steel duct. The two rectangular ducts proceed west, then north to four cement blockhouse scrubbers in one building. One rectangular

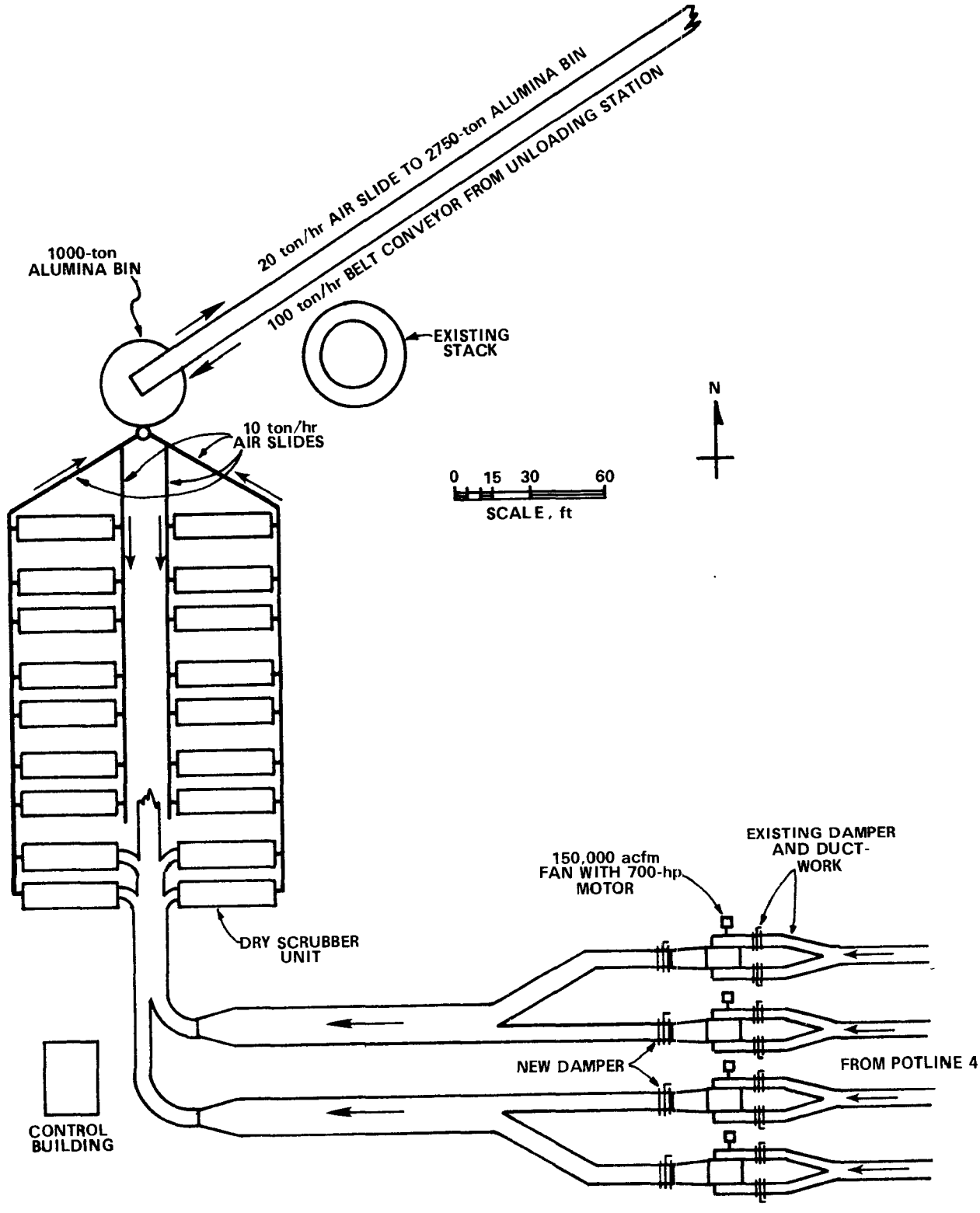

Figure 6-14. Retrofit layout -- plant A -- line 4.

duct feeds two scrubbers from the east side of the building and the other feeds two scrubbers from the west side.

Each of the four scrubbers has three gas inlets to a single spray chamber, the inlets being on the same horizontal plane. There is a bank of nine countercurrent sprays at each inlet. The gas flows upward through the chamber and out the top through a single exit. Near the top is another bank of countercurrent sprays, with a mist eliminator above this bank. Gas enters the scrubbers at 150 to 160°F and leaves at about 5°F above ambient temperature. Hence scrubbing causes a loss of thermal stack lift.

Rectangular wooden ducting conveys the exhaust from the four scrubbers to a common inlet on a single stack that discharges to the atmosphere 500 feet above grade.

The plant has experienced less emission control problems on line 4 than on lines 1 and 2. The cell cathode shells do not bow down in the center of the side, making tight hooding possible. The ducts are better designed to handle the hydrocarbons in the primary exhaust.

Water passes once through the cement blockhouse scrubbers and, along with the water discharged from the scrubbers on lines 1 and 2, goes to water treatment. The operation of the water treating facility is described in subsection 6.3.1.1.3.

6.3.1.2.3 Planned retrofit -- The planned retrofit consists of rerouting the line 4 primary exhaust downstream of the fans. The primary exhaust will go to 18 dry scrubbers located together in an area west of the blockhouse scrubbers -- again a central installation. The existing scrubbers will be bypassed.

Figure 6-14 is a layout of the retrofit for line 4, and Table 6-14 lists the major retrofit items. The ducting to the fans will remain unchanged. The existing fans will be modified to handle the increased pressure drop requirement. Primary exhaust from all four fans is ducted together as shown. Hence, four fans handle both potrooms of line 4 and feed all 18 dry scrubbers as pictured in Figure 6-14.

The per-cell primary exhaust rate on line 4 should not increase as a result of the retrofit. Hence, there should be no increase in the primary collection efficiency.

The dry scrubbers are sized so that at least two of the 18 can be off-line at a given time and the remaining scrubbers will still handle the 600,000 acfm exhaust. Originally the plant planned to manifold the 72 stacks and convey all the scrubbed line 4 primary exhaust to the existing 500-foot stack. However, a private firm did a meteorological study that indicated that it was not necessary to go to the stack in order to achieve ambient air quality standards. The plan now is not to use the stack. One advantage in not using it is the ability to pinpoint broken bags. The 72 stacks could be tied in to the existing stack at a later date.

As in the retrofit for lines 1 and 2, considerable solids handling is involved in the line 4 retrofit. The existing alumina unloading station is adequate to supply fresh alumina to the dry scrubbers. All of the solids handling equipment is being designed for 100 percent feed. Although one-pass feeding to the scrubbers is planned, it will be possible to recycle alumina from the reacted alumina storage bin to the fresh alumina storage bin. It will also be possible

Table 6-14. MAJOR RETROFIT ITEMS--PLANT A--LINE 4

1. Four fans, each modified to handle 150,000 acfm at 180°F and 20 inches of water total pressure drop and driven by a 700-hp motor. Modification will include a new damper on the outlet of each fan.

2. Two ground-level rectangular mild steel ducts, each about 150 feet long, feeding into one rectangular duct about 200 feet long. The latter duct feeds all 18 reactor-baghouse dry scrubbing units, reducing in size from a height of 13 feet to a height of 4 feet.

3. Eighteen mild steel reactor-baghouse dry scrubbers, set in two rows of nine each. Each scrubber is a rectangular box, 11 feet by 42 feet and 15 feet high. The top of each scrubber is 40 feet above the ground. Each scrubber has four compartments. Each compartment has a gas inlet section shaped like an inverted rectangular pyramid on the bottom and a stack on the top, or a total of 72 stacks for the 18 scrubbers. The stacks are 15 feet high, discharging 55 feet above the ground. Each scrubber is designed to handle 40,000 acfm of exhaust at 180°F. The baghouses on each scrubber are cleaned by air pulse, requiring 90 psig compressed air. Each scrubber requires one damper in the inlet gas line, air activated gravity alumina feed and discharge devices, and five manually operated alumina shut-off gates.

4. Combination mild steel belt conveyor-air slide about 500 feet long. The 24-inch belt conveyor is designed to handle 100 ton/hr of fresh alumina. An existing belt conveyor transports alumina uphill from the existing unloading station east of the line 4 potrooms to the top of the existing 2750 ton reacted alumina storage bin. This bin is located between and above the two line 4 potrooms, centered along the length of the potrooms. The new conveyor transports alumina from the existing conveyor up a slight grade to the top of the new fresh alumina storage bin -- item 5. The 20-ton/hr air slide returns reacted alumina from the scrubbers to the existing reacted alumina storage bin. The air slide is preceded by a 20-ton/hr air lift.

5. Mild steel, 1000-ton fresh alumina storage bin located near the 18 dry scrubbers with high, intermediate, and low level bin indicators. The bin is circular, 38 feet in diameter, with conical top and bottom. Straight side height is 19 feet. The bottom of the bin is 45 feet and the top is 95 feet above the ground.

6. Two 10-ton/hr mild steel air slides, each slide conveying alumina to nine dry scrubbers and equipped with a flow control valve and a manually operated shut-off gate. Total length of each slide is about 190 feet.

Table 6-14 (continued). MAJOR RETROFIT ITEMS--PLANT A--LINE 4

7. Two 10-ton/hr mild steel air slides, each slide conveying reacted alumina from nine scrubbers to an activator tank that services both air slides and feeds the 20-ton/hr air slide in item 4. Total length of each slide is about 230 feet.

8. Four small cyclonic dust collectors for alumina transfer and storage operations.

9. A 20- by 25-foot control building.

to unload fresh alumina directly to the reacted alumina storage bin. All of the air slides will be operated by blowers.

The fresh alumina storage bins and the dry scrubbers will occupy an area roughly 220 feet long and 110 feet wide. Nothing had to be torn down or moved to accomodate the equipment. The existing cement block-house scrubbers, located east of the dry scrubbers, will continue to operate until the tie-in to the dry scrubbers is made and will not be torn down afterwards.

The fate of the existing waste treating facility is explained in subsection 6.3.1.1.3.

Retrofit items common to line 4 and to line 1 and 2, and estimated installation times are given at the end of subsection 6.3.1.1.4.

6.3.1.3 Emissions Before and After Retrofit

Tables 6-15 and 6-16 present data on before and after retrofit emissions provided by the operating company in mid-1973 and re-submitted in October 1974. Table 6-15 shows the quantities of fluoride and particulate generated at the cells, the

Table 6-15. BEFORE RETROFIT EMISSIONS--PLANT A--LINES 1,2, AND 4
(lb/ton Al)

	Generation	Emissions			Removal
		Primary	Secondary	Total	
Fluoride (as F^-)					
Gaseous	19.0	5.0	0.6	5.6	13.4
Particulate	11.0	2.5	1.2	3.7	7.3
Total	30.0	7.5	1.8	9.3	20.7
Particulate					
Dry solids	114.3	20.1	9.5	29.6	84.7
Condensibles	12.8	9.0	0.9	9.9	2.9
Total	127.1	29.1	10.4	39.5	87.6

Table 6-16. AFTER RETROFIT EMISSION ESTIMATES--PLANT A--LINES 1,2, AND 4
(lb/ton Al)

	Generation	Emissions			Recovery
		Primary	Secondary	Total	
Fluoride (as F^-)					
Gaseous	19.0	0.4-0.6	0.5	0.9-1.1	18.0
Particulate	11.0	0.2-0.4	1.1	1.3-1.5	9.6
Total	30.0	0.6-1.0	1.6	2.2-2.6	27.6
Particulate					
Dry solids	114.3	2.0-3.0	6.0	8.0-9.0	105.8
Condensibles	12.8	1.5-2.5	0.5	2.0-3.0	10.3
Total	127.1	3.5-5.5	6.5	10.0-12.0	116.1

quantities emitted from the present primary control equipment and the secondary building roof monitors, and the quantities removed by the primary control equipment that eventually become solid and liquid waste. All of the quantities are expressed as pounds of pollutant per ton of aluminum produced (lb/ton Al). The fluoride values are expressed as fluoride ion. Dry solid particulate includes particulate fluoride as well as alumina and carbon. Condensibles could be alternately labeled "C_6H_6 Solubles" or "Hydrocarbon Tar Fog and Gas."

The generation and emission levels in Table 6-15 correspond to a primary collection efficiency of 94 percent, a primary removal efficiency of 73 percent, and an overall control efficiency of 69 percent on total fluoride for plant A. These levels also correspond to a primary collection efficiency of 92 percent, a primary removal efficiency of 75 percent, and an overall control efficiency of 69 percent on total particulate. Overall control efficiency on hydrocarbon condensibles is only 23 percent.

Table 6-16 shows the quantities of fluoride and particulate that are expected to be emitted after the dry scrubbing retrofit is installed by late 1974, and the quantities recovered and recycled to the cells. The emissions are preliminary estimates based on prototype tests mentioned in the introduction of this case description. Although the retrofit does not include secondary control, secondary emissions should be reduced through increased primary collection. This improved collection should be brought about by the increase in the per-cell primary exhaust rate on lines 1 and 2, mentioned under subsection 6.3.1.1.4, and by better hood sealing and improved operating practices throughout the plant.

The emission levels in Tables 6-15 and 6-16 are averages. However, the preliminary nature of the data upon which the primary emissions in Table 6-16 are based necessitates stating these emissions in ranges.

After four years of operating experience with this retrofit, plant A submitted actual data on total fluoride control in June 1979, showing average primary collection efficiency of 93.5 percent, an average primary removal efficiency of 99 percent, and average overall control efficiency of 92.5 percent. Hooding efficiency was less, and scrubber efficiency more, than projected.

This retrofit was installed to meet State particulate standards of 15 pounds of solid particulate per ton of aluminum produced. This limit was achieved, but hood leakage is more than projected because of recycle to the cell of tars from anode pitch and "fines" from attrition of alumina in the dry scrubber. Adding recycle to the somewhat lower than expected hooding efficiencies, a doubling of secondary emissions of both dry solids and condensibles over Table 6-16 has resulted.

These increased secondary emissions affect workroom comfort, therefore plant A has installed a "roaster" to burn the tars after capture and before recycling the alumina to the cells. This added item has increased the projected capital costs.

In summary, observed total fluoride emissions have been 2.3 lbs/ton Al. Plant A is in an industrial region and the State has no fluoride emission standard.

6.3.1.4 Capital and Annual Operating Costs of Retrofit

6.3.1.4.1 Capital costs -- Table 6-17 presents capital costs and estimates for the total retrofit furnished by the company in December 1974 and broken down into the major retrofit items. Although the installation is complete, not all of the final figures are known. Assuming an annual aluminum capacity of 80,000 tons, $11,313,000 is equivalent to a capital cost of $141 per annual capacity ton.

The largest cost item in Table 6-17 is ductwork. Of the $1,819,000, $1,600,000 is estimated for the collector ducts on lines 1 and 2. Equipment purchase costs for fans, reactors, and baghouses amount to $200,000, $500,000 and $987,000 respectively. Costs of the seven small cyclonic dust collectors listed in Tables 6-13 and 6-14 are covered under alumina transfer and storage in Table 6-17. Site preparation costs total $367,000 and are covered under ducts, fans, reactors, and alumina storage in Table 6-17; the costs include building and equipment demolition both before and after retrofitting. Of the $320,000 for instrumentation and sampling, the control buildings are estimated at $68,000, instrumentation at $220,000, and sampling at $30,000. All of the sampling costs is for gas sampling; part of it for sample ports and part for sampling equipment. The $670,000 for bag maintenance covers the cost of the aforementioned (see subsection 6.3.1.1.4) bag rehabilitation building, a mobile crane and associated equipment. The $458,000 for compressed air covers the cost of the aforementioned compressor building and associated equipment. Of the $1,830,000 for engineering,

Table 6-17. RETROFIT CAPITAL COST ESTIMATE--PLANT A--LINES 1,2, AND 4

Direct--Capital	
Ducts	$1,819,000
Fans	341,000
Reactors	1,775,000
Baghouses	1,269,000
Alumina transfer	1,196,000
Alumina storage	415,000
Electrical	975,000
Instrumentation and sampling	320,000
Bag maintenance	670,000
Compressed air	458,000
Capital spares	60,000
Subtotal	$9,298,000
Direct--NonCapital	
Preoperating expense	$ 150,000
Equipment testing	35,000
Subtotal	$ 185,000
Indirect--Capital	
Engineering	$1,830,000
Contingency	-
Escalation	-
Subtotal	$1,830,000
Project total	$11,313,000

engineering performed by the operating company is estimated at $200,000; plant engineering at $60,000; construction management at $200,000; and contract engineering, fee, and procurement at $1,620,000. There are no contingency and escalation costs since total installation is complete.

All of the ducts, reactor-baghouses, bins, and conveyors are mild steel construction. This is a cost advantage that a dry control retrofit enjoys over a wet ESP retrofit, as the latter normally requires 316 stainless steel construction.

The book value of all assets to be retired as a result of the retrofit was $801,214 as of December 31, 1971. Approximately 50 percent of these assets will be demolished or abandoned in place. The remaining assets, including fans, motors, pumps, and steel ductwork, may have some salvage value if they can be sold. Because of the uncertainty of the disposition and recoverable value of these assets, their salvage value has been ignored by the company in its capital cost estimate.

The company has done considerable development work at this plant and at other locations. These development costs are not reflected in Table 6-17. In June 1979, Plant A resubmitted actual capital costs. These were about 4 percent under the forecast. However, the "roaster" being installed will add about $4,000,000 to the capital cost.

6.3.1.4.2 Annual operating costs -- Table 6-18 is a company estimate of what the gross and net annual operating costs of the total retrofit should be during the first year of operation. Net annual operating cost for the before-retrofit control is estimated to be $292,800. Assuming a daily aluminum production of 205 tons equivalent to an annual production of 74,825 tons, the gross annual operating cost in Table 6-18 of $741,450 amounts to $9.91 per ton. Making the same assumptions, the net annual operating cost of -$65,128 amounts to -$0.87 per ton. The negative net annual operating cost does not represent profit because capital-related charges are not included.

Most of the items under gross annual operating cost in Table 6-18 are self-explanatory. The electric power rate is equivalent to 2.99 mills per kilowatt-hour, which is very low for the United States. Part of the power requirement is for producing compressed air for bag cleaning.

As mentioned in subsection 6.3.1.1, only the recovered alumina and fluoride are considered to be valuable materials. The amount of recovered alumina is estimated from a recovery rate of 52.4 lb/ton Al and an annual production of 74,825 tons. The amount of recovered aluminum fluoride is estimated from a recovery rate of 27.6 lb/ton Al (Table 6-16) equivalent to 45.2 pounds of aluminum fluoride containing 61.1 percent fluoride, and an annual production of 74,825 tons. The latter estimate assumes that both gaseous and particulate fluoride ion will be returned to the cells as aluminum fluoride. An alumina

Table 6-18. RETROFIT ANNUAL OPERATING COST ESTIMATE--PLANT A--
LINES 1, 2, AND 4

Gross Annual Operating Cost	
Based on 1975 (first year of operation) cost levels.	
Operating Supplies	
Bags: 28,080 installed + 5% damaged = 29,484 replaced once per 18 months or 19,656 per year 19,656 replaced @ 5.50 each =	$108,108
Other supplies (15% of operating labor)	30,500
	$138,608
Operating Labor	
Bag change-out @ 3 bags/manhour @ $8.55/manhour	
$\frac{19,656}{3}$ X $8.55	$ 56,020
Operating and control: 1 operator/shift = 8,760 manhours at $10.31/manhour	90,316
Fan and duct cleaning: 7,500 manhours @ $7.60/manhour	57,000
	$203,336
Maintenance	
Labor: 11,484 manhours @ $12.47/manhours	$143,205
Material: 57% of labor	81,627
Outside contract: Painting @ $140,000/5 years	28,000
	$252,832
Power	
49,056 megawatt-hours @ $2.99	$146,677
Total Gross Annual Operating Cost	$741,450
Value of Recovered Material	
Alumina Recovered: 1960 ton/year @ $96.80/ton	$189,728
Aluminum Fluoride Recovered: 1690 ton/year @ $365/ton	616,850
Total Value of Recovered Material	$806,578
Net Annual Operating Cost	-$ 65,128

cost of $96.80 per ton is equivalent to 4.8 cents per pound. A cost of $365 per ton for aluminum fluoride containing 61.1 percent fluoride is equivalent to 29.9 cents per pound of fluoride. By comparison, an EPA contract study gives 1971 recovered alumina and fluoride values of 3.2 and 25 cents per pound, respectively.[50] The value of recovered materials has increased due to rather significant increases in the value of alumina which reflects the recent changes in bauxite prices around the world, as well as some increase in the value of fluorides.

Net annual cost includes the above operating costs along with capital-related charges. Such charges include depreciation, interest, administrative overhead, property taxes, and insurance. These were not furnished by the company and, hence, are not included in Table 6-18. Based on a "capital recovery" factor of 11.683 percent, an "administrative overhead" factor of 2 percent, and a "property taxes and insurance" factor of 2 percent, capital related charges would amount to 15,683 percent of capital cost for this retrofit. The "capital recovery" factor covers depreciation and interest and is based on a 15-year equipment life and 8 percent interest. Capital related charges for this retrofit thus amount to 15.683 percent of $11,313,000 -- or $1,774,218. Adding these charges to Table 6-18 would result in a gross annual cost of $2,515,668 and a net annual cost of $1,709,090.

Actual operating charges in June 1979 showed higher manpower costs but also higher and offsetting values of material recoveries. Current operating costs are approximately 10 percent under the forecasts.

6.3.2 Plant B--HSS Cells--Primary Wet ESP Retrofit[51]

This plant's reduction facilities include two HSS plants -- a south plant and a north plant. Primary control presently consists of wet scrubbers, but plans are to retrofit the primary exhaust with 31 wet electrostatic precipitators, 10 for the south plant and 21 for the north plant. The plants have no secondary control and none is planned.

Wet ESPs are being installed because:

1. The presence of a cryolite recovery plant to handle the scrubber-ESP effluents makes dry scrubbing less attractive.
2. Aluminum product purity at plant B is high, among the highest in the nation. According to plant personnel, dry scrubbing with attendant recycle would lower this purity.
3. High energy scrubbers would require excessive power inputs to achieve the desired control.
4. The cross flow packed bed scrubber with Tellerette[R] packing applied to an HSS potline will plug after only 30 minutes of operation.
5. Although the floating bed scrubber does not plug, it cannot attain as high a level of control as the ESP.

Potline operation, present controls, and the planned retrofit are now described, first for the south plant and then for the north plant. Next the present air emissions and the emissions expected after total retrofit are presented. Then the plant's present water treating facility and the changes to it necessitated by the retrofit are explained. Finally, capital and annual operating costs for the total retrofit are estimated.

6.3.2.1 Engineering Description -- South Plant

6.3.2.1.1 Potline operation -- The south plant has three potlines and a total capacity of 70,000 ton/year. Each potline has 124 cells set in four rows in one potroom for a plant total of 372 cells. The potrooms have sidewall ventilation. The plant was built in 1941 and expanded in 1952.

The cells have total-enclosure hooding with manually operated steel roll-down hood doors extending the full length of both sides of each cell. Pollutants continuously escape from the top of the cell enclosure and also from the hood doors when they are open. The doors have to be opened frequently to add alumina to the cryolite bath by working the cell, to tap the molten metal layer from beneath the bath, and to insert and remove studs from the anode block while raising the flexible current connectors.

6.3.2.1.2 Present controls -- Four 8-inch ducts, two on each end of each cell, pick up the primary exhaust from the top of the cell hooding enclosure and carry it to a circular manifold duct. Each manifold handles primary exhaust from 15 or 16 cells. The primary exhaust rate is 2000 to 2500 acfm per cell at 200°F.

Each manifold leads to a fan that is driven by a 50-hp motor and is located just outside the potroom. Originally each fan was upstream of one Douglas fir spray tower, each potroom having eight spray towers apiece. However, four of the 24 towers have been replaced by two larger towers, the larger towers each handling exhaust from two fans or manifolds. Each tower is capped with an inverted cone. The 20 smaller towers are each about 8 feet in diameter and 35 feet high, and the two larger towers are each about 15 feet in diameter and 50 feet high. By way of comparison, the peaks of the adjacent potrooms are 39 feet high and the tops of the roof monitors are 22 feet above the peaks, for a total building height of 61 feet.

The towers are equipped with dual sprays that are fed with a circulating alkaline solution that contains 2 grams of fluoride per liter of solution. Because fine sprays plug, plant personnel consider it essential to use a coarse spray and thoroughly wet the walls of the tower in order to maximize gaseous and particulate fluoride removal efficiency.

6.3.2.1.3 Planned retrofit -- Figure 6-15 is a layout of the south plant retrofit and Table 6-19 lists the major retrofit items. The three potrooms are oriented in a northeast-southwest direction. The

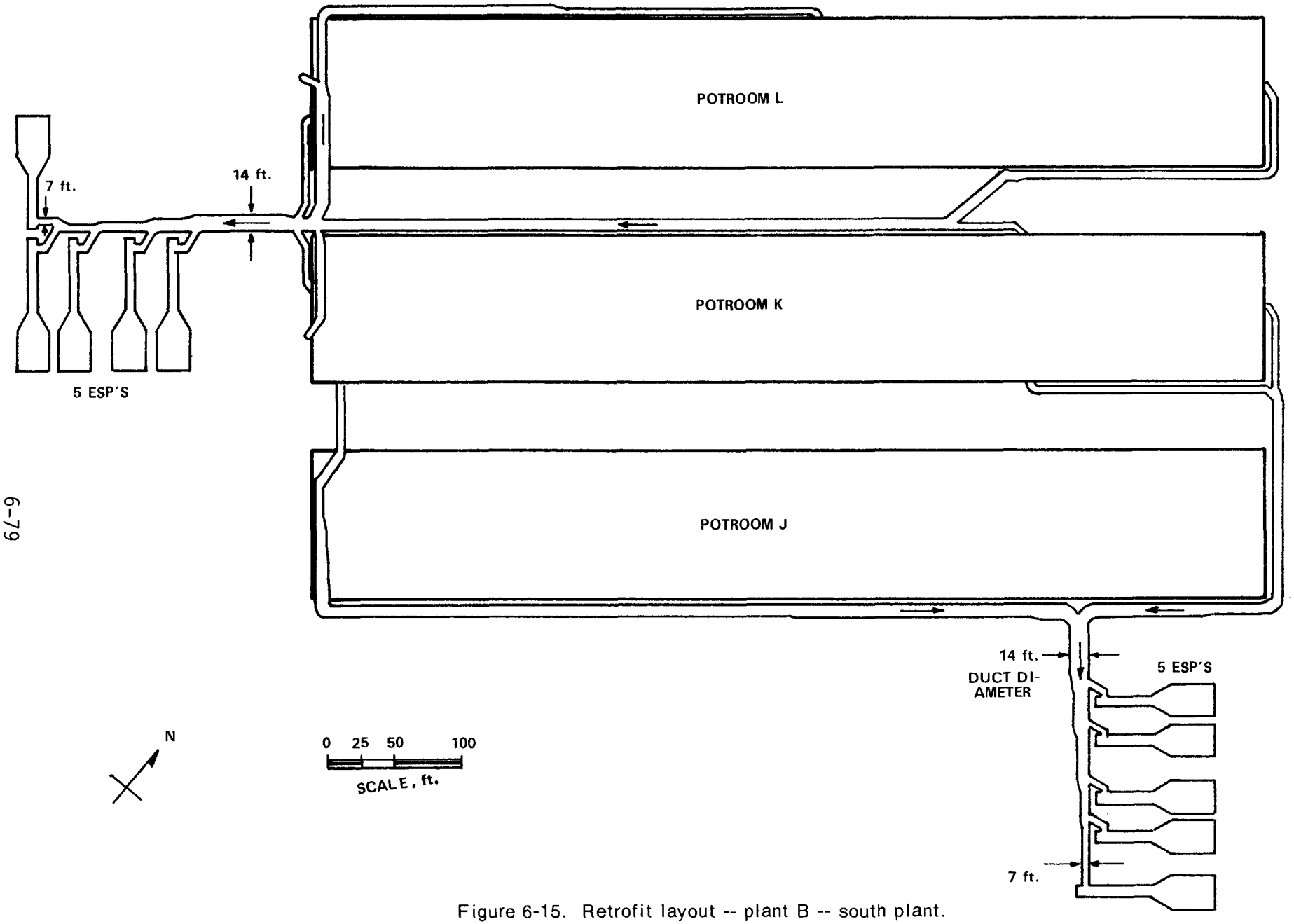

Figure 6-15. Retrofit layout -- plant B -- south plant.

Table 6-19. MAJOR RETROFIT ITEMS--PLANT B--SOUTH PLANT

1. Several circular elevated mild steel ducts conveying primary exhaust to two retrofit areas southeast and southwest of the plant. For each area, 4-foot ducts combine and grow into one 14-foot duct that reduces in size to 7 feet as it feeds 5 ESPs.

2. Ten fans, each driven by a 300-hp motor and upstream of an ESP. Each fan is designed to handle 100,000 scfm of exhaust at about 4 inches of water total pressure drop.

3. Ten steel ESPs each designed to handle 100,000 scfm of exhaust. Each ESP is a rectangular box 29 feet square and 29 feet high with a stack discharging about 80 feet above the ground. Each ESP has a gas side-inlet section of flattened rectangular pyramidal shape.

4. A 20- by 50-foot control building.

---

planned retrofit consists of ducting all the primary exhaust from potroom J and half from potroom K to five ESPs located together as shown in Figure 6-15, and ducting all the primary exhaust from potroom L and the other half from potroom K to five ESPs also located together. Each set of five ESPs is termed a central installation.

The per-cell primary exhaust rate will be increased from 2000-2500 acfm at 200°F to 3500 acfm at 200°F, increasing the south plant's primary collection efficiency. The ducts inside the potrooms are presently oversized, so they will not have to be modified to handle the increased flowrate. Primary collection efficiency will also be improved by installing new motorized doors on the cells and sealing the top of each cell's hooding enclosure with glass wool.

Redirecting the south plant's primary exhaust from courtyard to central controls will require a balanced ducting layout design that ensures equal pressure and flowrates in all of the 12 manifolds that are serviced by each set of 5 ESPs.

The ducting changes for this central retrofit will be external to the potrooms. The existing fans and spray towers will be bypassed. All of the spray towers will eventually be torn down, but many will have to be torn down during the installation to make room for the ducting shown in Figure 6-15. This will mean that portions of the plant will run uncontrolled for varying periods of time during the installation. Nothing but the spray towers will have to be torn down as a result of the south plant retrofit.

Removal of the existing spray towers will force the wet ESPs to act as absorbers for gaseous fluoride and require that liquor be fed to the inlet sections of the ESPs. Plant personnel hope to control corrosion of the ESP steel internals by controlling the composition and pH of this feed liquor. Even so, they anticipate having to rebuild the internals every 10 years.

Estimated installation times are given at the end of Subsection 6.3.2.2.

6.3.2.2 Engineering Description - North Plant

6.3.2.2.1 Potline operation -- The north plant also has three potlines and has a capacity of 140,000 ton/year for a total plant capacity of 210,000 ton/year. Each potline has four rows of 168 cells in two pot-

rooms, or two 42-cell rows per potroom, for a plant total of 504 cells. The potrooms have sidewall and basement ventilation. The plant was built in 1968.

The cells are elevated slightly above the floor and have total-enclosure hooding with mechanically operated aluminum doors extending the full length of both sides of each cell. Comments on emissions from the top of the cell enclosure and on door opening for the south plant also apply to the north plant.

6.3.2.2.2 Present controls -- Four ducts, two on each end of each cell, pick up the primary exhaust from the top of the cell hooding enclosure and carry it to a circular manifold duct. One manifold handles primary exhaust from 14 cells. The primary exhaust is 3600 scfm per cell.

Each manifold proceeds to a 50,000 scfm fan that is driven by a 125-hp motor, is located outside the potroom, and is upstream of a spray tower. Figure 6-16 shows the general location of the 36 spray towers at the north plant. Each tower is 13 feet in diameter and is capped with an inverted cone that connects to a 5-foot stack. This stack discharges to the atmosphere about 70 feet above the ground. By way of comparison, the peaks of the potrooms are 54 feet high and the tops of the roof monitors are 8 feet above the peaks, for a total building height of 62 feet. The towers are fed with the same alkaline solution as the towers at the south plant.

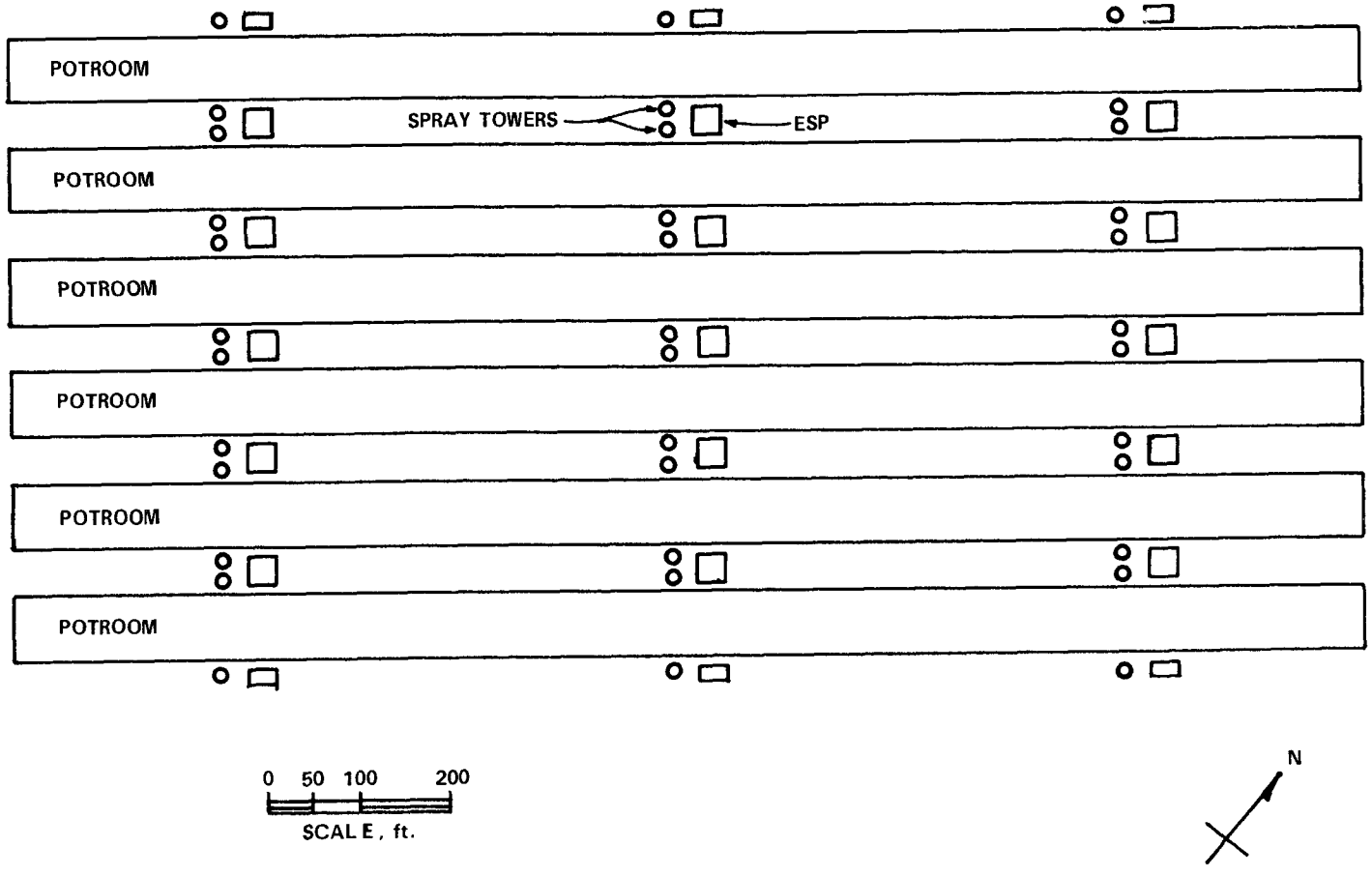

Figure 6-16. Retrofit layout -- plant B -- north plant (location and position of control equipment not exact).

6.3.2.2.3 Planned retrofit -- Figure 6-16 is a layout of the north plant retrofit and Table 6-20 lists the major retrofit items. The south end of the north plant is 1100 feet northwest of the north end of the south plant. The planned retrofit consists of adding 21 ESPs downstream of the existing fans and spray towers. The plan is to install three 50,000 scfm wet ESPs on the outside of each of the two end buildings, one per spray tower, and three 100,000 scfm wet ESPs in each of the five 51-foot wide courtyards between potrooms and between pot-lines (see Figure 6-16). Each of the latter ESPs will handle the exhaust from two spray towers, one from each adjacent building.

Primary collection efficiency should not increase at the north plant as a result of the retrofit because the north plant already incorporates all of the same modifications that are expected to increase collection efficiency at the south plant. The per-cell primary exhaust rate will remain at 3600 scfm. The existing fans and spray towers and all the ductwork upstream of the spray towers will not be changed, and nothing will have to be torn down as a result of the north plant retrofit. Downstream of each tower a 5-foot duct will carry the tower exhaust from the tower's inverted cone to the inlet section of the adjacent ESP. There will also be a valving arrangement to vent the tower exhaust to the atmosphere if the ESP is inoperative.

At the north plant, liquid will be fed to the inlet section of the ESPs and will pass through an ESP before passing through its associated spray tower(s). As at the south plant, plant personnel hope to control corrosion by controlling the composition and pH of the liquor, but anticipate rebuilding the ESP internals every 10 years.

Table 6-20. MAJOR RETROFIT ITEMS--PLANT B--NORTH PLANT

1. Six steel ESPs, each designed to handle 50,000 scfm of exhaust. Each ESP is a rectangular box 29 feet by 14 feet and 29 feet high with a stack discharging about 80 feet above the ground. Each ESP has a gas side-inlet section of flattened rectangular pyramidal shape.

2. Fifteen steel ESPs, each designed to handle 100,000 scfm of exhaust. Each ESP is a rectangular box 29 feet square and 29 feet high with a stack discharging about 80 feet above the ground. Each ESP has a gas side-inlet section of flattened rectangular pyramidal shape.

3. Seven 8- by 20-foot control buildings, one for each set of three ESPs.

It was necessary to have the wet ESP tailor-made to the plant. It was also necessary to prove its operability before making a total plant commitment. For these reasons, and because of the limited availability of funds and manpower, the retrofit was completed in phases.

In late 1970, design was started on a pilot 50,000 scfm unit on the north plant. As of September 1973, one more 50,000 scfm unit and three 100,000 scfm units were operating on the north plant. These five units comprise Phase I of the retrofit. Phase II involves installing the remaining 16 ESPs on the north plant, and Phase III involves installing the 10 ESPs and accompanying fans and ductwork on the south plant.

Plant B completed Phases I and II in January 1975 and, as of March 1975, planned to complete all three phases by June 1975. It

will then have been about 4-1/2 years from the start of development through total plant installation. Had the pilot unit not proven operational, this time could have been much longer.

Because the plant's engineering design capabilities increased with operating experience, each subsequent phase has taken less time to design than the former. By necessity, work on a subsequent phase begins before the installation of the former phase is completed.

6.3.2.3 Emissions Before and After Retrofit

Tables 6-21 and 6-22 reflect estimates of emissions before and after retrofit provided by the company. All of the quantities are expressed as pounds of total fluoride ion per ton of aluminum produced (lb/ton Al). The tables show the quantities generated at the cells, the quantities emitted from the applicable primary control equipment and the secondary building roof monitors, and the quantities removed by the primary control equipment that eventually become either cryolite or liquid waste. The overall plant average is a weighted average based on the north plant accounting for 67 percent of plant B's production.

The generation estimates in Tables 6-21 and 6-22 are based on a statistical analysis for the 10-month period beginning June 1, 1972, and ending April 1, 1973. Plant personnel selected this time interval because the total plant was at full production and had the fewest in-process variables to distort the results. Data from other time periods would, of course, be somewhat different.

Table 6-21. BEFORE RETROFIT MAXIMUM EMISSIONS--PLANT B--NORTH AND SOUTH PLANTS
(lb total F^-/ton Al)

	Generation	Emissions			Removal
		Primary	Secondary	Total	
North plant	38.2	3.6	1.9	5.5	32.7
South plant	50.0	4.0	10.0	14.0	36.0
Overall plant average	42.1			8.3	33.8

Table 6-22. AFTER RETROFIT MAXIMUM EMISSION ESTIMATES--PLANT B--NORTH AND SOUTH PLANTS
(lb total F^-/ton Al)

	Generation	Emissions			Removal
		Primary	Secondary	Total	
North plant	38.2	0.7	1.9	2.6	35.6
South plant	50.0	1.4	5.1	6.5	43.5
Overall plant average	42.1			3.9	38.2

The method of analyzing the data was taken from Probability and Statistics for Engineers.[52] Sample averages and standard deviations were calculated from data derived from the plant's standard monthly sampling program. In this program, the plant samples the input to and the output from 6 to 10 spray tower fume control units and the output from 4 to 6 roof monitor locations. Different locations are sampled each month. The plant's objective is to sample every location across the plant once every 6 months.

The average pounds of total fluoride generated per day was computed on a monthly basis by adding the average daily emissions from the monitors to the average daily spray tower inputs per month per plant. The monthly average pounds of total fluoride generated per ton of aluminum produced was then computed for each of the 10 months by dividing each such average generation per month per plant by that plant's average daily production rate for the month. The average and the standard deviation for the 10-month period in each plant was then computed from the 10 monthly averages. The Kolomogorov-Smirnov Test was conducted on the data derived for each plant and it was determined that a normal distribution provided a good fit for each plant and for the total plant. The generation estimates in Tables 6-21 and 6-22 represent 95 percent tolerance limits at a 95 percent confidence level.

The primary and secondary emissions in Tables 6-21 and 6-22 are computed by applying estimated primary collection and removal efficiencies to the above generation estimates. Estimated primary collection and

removal efficiencies for Table 6-21 are 95 and 90 percent, respectively, for the north plant, and 80 and 90 percent, respectively, for the south plant. Estimated primary collection and removal efficiencies for Table 6-22 are 95 and 98 percent, respectively, for the north plant, and 90 and 97 percent, respectively, for the south plant. Assuming a zero percent secondary removal efficiency, the above primary collection and removal efficiencies correspond to overall control efficiencies before retrofit for the north and south plants of 86 and 72 percent, respectively; and to overall control efficiencies after retrofit for the north and south plants of 93 and 87 percent, respectively.

Although not shown in Tables 6-21 and 6-22, the retrofit should increase the total particulate primary removal efficiency from 55 to 98 percent, and the hydrocarbon primary removal efficiency from a control level of 8 to 10 percent up to a control level of 92 to 94 percent, the latter being a ten-fold increase. The hydrocarbons comprise a substantial portion of the small-diameter particulate that the present scrubbers are incapable of removing.

Table 6-23 contains revised June 1974 company estimates of emissions after retrofit. The sampling methods and statistical treatment are the same as for Table 6-22. However, the data are averages rather than 95 percent tolerance limits and are computed over a 14-month period of full production that includes the 10-month period used for Table 6-22. Also, the primary emission estimates at both the north and south plants are 95 percent confidence level estimates based on actual testing of primary emissions at the north plant. Twelve months of emission testing in 1972 yielded an average total emission before retrofit of 5.4 lb F/ton Al.

Table 6-23. AFTER RETROFIT AVERAGE EMISSION ESTIMATES--PLANT B--NORTH AND SOUTH PLANTS (lb total F/ton Al)

	Generation	Emissions			Removal
		Primary	Secondary	Total	
North plant	32.1	0.25	1.6	1.85	30.25
South plant	31.1	1.10	4.0	5.1	26.0
Overall plant average	31.8			2.9	28.9

The primary and secondary emissions in Table 6-23 correspond to primary collection, primary removal, and overall control efficiencies of 95, 99.2, and 94 percent, respectively, for the north plant; and of 87, 96, and 84 percent, respectively, for the south plant.

From Table 6-22 it can be seen that the maximum expected total fluoride emissions of 3.9 lb/ton Al for this existing plant after retrofit is about twice that of the EPA standard of performance for new primary aluminum plants of 2.0 lb/ton Al. The average expected total fluoride emission of 2.9 lb/ton Al in Table 6-23 is somewhat higher than the average expected total fluoride emission for plant A of 2.4 lb/ton Al shown in Table 6-16. However, as can be seen by comparing the efficiencies for plant B with those for plant A in Section 6.3.1.3, the total fluoride primary removal efficiency for the wet ESP retrofit at plant B is the same or higher than the 96 percent primary removal efficiency for the dry scrubbing retrofit at plant A. The expected total fluoride emissions at plant B are higher than those expected at plant A because the primary collection efficiency of the

south plant at plant B after retrofit is estimated to be only 87-90 percent. The primary collection efficiency at plant A and at the north plant of plant B are both estimated to be 95 percent after retrofit.

6.3.2.4 Water Treatment

6.3.2.4.1 Current practice-- Fluoride is removed from the primary exhaust in the north and south plant spray towers into a recirculating liquor stream. Fluoride is recovered from this liquor as standard grade (90 percent) cryolite in a cryolite recovery plant. This recovery is illustrated in Figure 6-17:

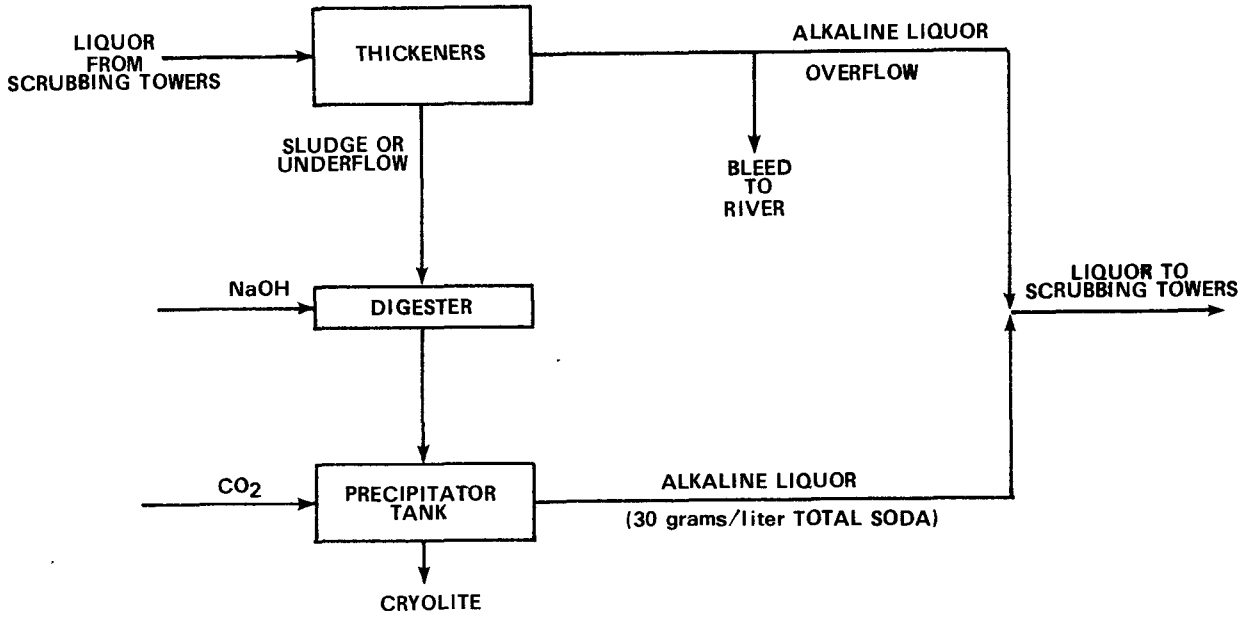

Figure 6-17. Flow diagram -- plant B -- cryolite recovery plant.

The lowering of the pH in the precipitator tank causes cryolite precipitation.

At the spray towers, the recirculating liquor picks up some of the sulfur dioxide that is generated at the reduction cells. This causes a sulfate buildup in the liquor, and it is necessary to bleed a small portion of the liquor to control the sulfate level. The bleed is controlled by a constant volume regulator. It goes directly to a waste water discharge sump where it is thoroughly mixed before being discharged to a nearby waterway.

Plant B also recovers fluoride from its spent potliner. It used to buy potliner from other plants, but no longer does this due to stricter water effluent standards.

Plant B water effluent loadings are presented in an EPA study.[53] Plant B in this document is plant J in the EPA study. Plant B net effluent loadings include fluoride and suspended solids loadings of 2.2 and 3.8 lb/ton Al, respectively.[54] By comparison, the recommended 30-day effluent limitations for the primary aluminum industry to be achieved by July 1, 1977, are 2 and 3 lb/ton Al for fluoride and suspended solids, respectively; and the recommended daily effluent limitations are 4 and 6 lb/ton Al, respectively.[55] These limitations are considered to be attainable through the application of the best practicable control technology. For wet scrubbing systems, best practicable control technology is defined as cryolite precipitation with recycle as practiced at plant B, or lime treatment with either recycle or subsequent adsorption on activated alumina.[56]

Table 6-21 shows that 33.8 pounds of total fluoride are removed by the spray towers per ton of aluminum produced. Plant personnel did not provide an estimate of the fluoride recovered from potliners. If we assume the latter to be 20 lb/ton Al (see Figure 5-5), then the cryolite recovery plant handles 53.8 lb/ton Al of fluoride. If it is assumed that there is 100 percent recovery of fluoride from the potliners and that the plant's net effluent fluoride loading of 2.2 lb/ton Al is all attributable to cryolite recovery, then it can be concluded that the cryolite plant fluoride recovery efficiency for plant B is 95.9 percent.

6.3.2.4.2 Changes due to retrofit--Presently the hydrocarbons collected in the recirculating scrubber liquor cause foaming in the cryolite recovery plant when treating the resultant sludge. Such foaming can make it extremely difficult to operate sludge treating equipment and can result in airborne fluoride emissions. The plant can process in spite of the present foaming, but, as noted in subsection 6.3.2.3, the retrofit is expected to result in a ten-fold increase in the hydrocarbon collected. If foaming is a direct function of the hydrocarbon content in the sludge, then something must be done.

The plant has investigated three possible solutions. The first two involve oxidizing the hydrocarbons and the third involves controlling cryolite plant process variables so foaming does not occur.

The oxidation methods considered are direct calcination in a rotary kiln and the Zimpro wet oxidation process. Direct calcination is difficult to operate, has high energy requirements and high operating

costs, and probably will require one more wet ESP to control emissions. The performance of the Zimpro process on this type of sludge is not well known and the capital costs are quite high.

The plant hopes to be able to identify the process variables that affect foaming and thus accomplish a solution with considerably lower capital costs. As of March 1975, it was not known if oxidation would be required.

The plant has no immediate plans to reduce the effluent loadings associated with its bleed stream.

6.3.2.5 Retrofit Capital and Annual Operating Costs

6.3.2.5.1 Capital costs--Table 6-24 is a spring 1973 estimate of the total retrofit capital costs for the north plant, south plant, and the sludge treatment project broken down into the major retrofit items. Assuming an annual aluminum capacity of 210,000 tons, $23,457,500 is equivalent to a capital cost of $112 per annual capacity ton.

Plant B furnished the direct costs in Table 6-24. Reduction cell sealing, new motorized doors, and new fans at the south plant will increase primary collection efficiency. Two new thickeners, one for each plant, are included under phases II and III in Table 6-24; but in reality, they are part of cryolite recovery. New thickeners are needed to handle the higher flowrate and higher fluoride loading resulting from the retrofit and to remove smaller particulate. Smaller particulate removal is required because the ESPs will have finer spray nozzles than the present spray towers, and finer nozzles are more likely to plug.

Table 6-24. RETROFIT CAPITAL COST ESTIMATE--PLANT B

Direct costs	North plant Phase I	North plant Phase II	South plant Phase III
Reduction cell sealing		-	$200,000
Motorized doors		-	280,000
Ducts	Not	$520,000	1,395,000
Fans	broken	-	160,000
Electrostatic precipitators	down	4,810,000	3,430,000
Foundations		200,000	300,000
Drains, pumps, and piping		200,000	100,000
Thickeners		400,000	300,000
Electrical		380,000	1,115,000
Control buildings		42,000	30,000
Equipment sales tax		328,000	365,000
Subtotals	$1,480,000	$6,880,000	$7,675,000

Sludge treatment costs	
Site preparation and foundation	$127,000
Slurry tank and pumps	33,500
Centrifuge, kiln, feed screw, afterburner and scrubber	705,000
Treated solids handling equipment	101,000
Electrical	156,000
Wet oxidation equipment, including foundations and electrical	887,500
Subtotal-- sludge treatment including sales tax	$2,010,000

Table 6-24 (continued). RETROFIT CAPITAL COST ESTIMATE--PLANT B

Subtotal	Phase I	$1,480,000
	Phase II	6,880,000
	Phase III	7,675,000
	Sludge treatment	2,010,000
Subtotal direct costs		$18,045,000
Indirect costs		
Engineering		$1,804,500
Contingency		1,804,500
Escalation		1,804,500
Subtotal indirect costs		5,412,500
Subtotal direct costs		18,045,000
Project total cost		$23,457,500

Sludge treatment costs are shown for the equipment associated with both direct calcination and wet oxidation because plant personnel believed that, regardless of the alternative selected, they will probably spend $2 million for suitable sludge treatment equipment. The sludge treatment equipment will be installed on land that is presently used to store used potliners. The site preparation costs for sludge treatment in Table 6-24 represent the funds necessary to prepare this land.

Plant B did not furnish indirect costs. Engineering, contingency, and escalation costs in Table 6-24 are each based on arbitrary factors of 10 percent of direct capital.

The plant B retrofit would have been more costly had the ESPs been constructed of 316 stainless steel, the normal material of construction for wet ESPs applied to an aluminum plant. As mentioned on subsection 6.3.2.1.3, the plant hopes to control corrosion of the steel internals but still anticipates rebuilding the internals every 10 years.

The assets to be retired as a result of the planned retrofit have essentially no book value.

Table 6-25 is an October 1974 update of the total retrofit capital costs for the north plant, south plant, and the sludge treatment projects. Assuming an annual aluminum capacity of 210,000 tons, $19,300,600 is equivalent to a capital cost of $92 per annual capacity ton. The direct costs in Table 6-25 are from the company. The indirect engineering cost is based on an arbitrary factor of 10 percent of direct capital. There are no escalation and contingency costs since installation is nearing completion.

Table 6-25. REVISED RETROFIT CAPITAL COST ESTIMATE--PLANT B

Direct costs	
North plant	$8,871,000
South plant	7,675,000
Sludge treatment	1,000,000
Subtotal	$17,546,000
Indirect costs	
Engineering	$1,754,600
Contingency	-
Escalation	-
Project total cost	$19,300,600

6.3.2.5.2 Annual operating costs-- Table 6-26 is a company estimate of year-to-year additional gross and net annual operating costs for operating the ESPs after the plant has been retrofitted. Assuming an annual aluminum production equal to the annual capacity of 210,000 tons, $171,000 for operating the ESPs amounts to $0.81 per ton. Plant personnel stated that, even though these additional costs are quite modest, annual operating costs for plant B's present system are substantial. However, plant personnel are not able to break out the present emission control annual operating costs. Also, although an estimate of annual operating costs for sludge treatment was not obtained, plant personnel stated that its operating costs should be considerably smaller than that shown for the ESPs in Table 6-26.

The planned retrofit will not directly recover any valuable material; hence, the zero credit. Generally, the value of the fluoride recovered in an aluminum plant that has a wet scrubbing system and cryolite recovery is offset by the operating costs of recovering the fluoride.

The capital-related charges that are part of net annual cost were not furnished by plant B and are not included in Table 6-26. Based on a "capital recovery" factor of 14.903 percent, an "administrative overhead" factor of 2 percent and a "property taxes and insurance" factor of 2 percent, capital related charges would amount to 18.903 percent of capital cost for this retrofit. Since the plant anticipates rebuilding the ESPs every 10 years, the "capital recovery" factor covering

Table 6-26. RETROFIT ANNUAL OPERATING COST ESTIMATE--PLANT B--NORTH AND SOUTH PLANTS

Gross annual operating cost	
Operating labor and materials	$56,000
Utilities	
Fuel	-0-
Electricity	40,000
Water	5,000
Maintenance labor and materials	70,000
Total gross annual operating cost	$171,000
Value of recovered materials	-0-
Net annual operating cost	$171,000

depreciation and interest is based on a 10-year equipment life and 8 percent interest. Capital related charges for this retrofit thus amount to 18.903 percent of $19,300,600--or $3,648,000. Adding these charges to Table 6-26 would result in gross and net annual costs of $3,819,000.

6.3.3 Plant C--Prebake Cells--Primary Injected Alumina Dry Scrubbing Retrofit[57]

This plant has three side-worked prebake potlines. As built, the potlines had only secondary control consisting of wet scrubbers, but all three potlines were recently retrofitted with primary control systems. Hoods were installed on the cells, and the primary cell gas exhausts were directed to injected alumina dry scrubbers.

In the following sections, potline operation, secondary controls with associated water treatment, and the primary retrofit are described: Next the emissions before and after total retrofit are presented; and capital and annual costs for the total retrofit are estimated.

6.3.3.1 Engineering Description

6.3.3.1.1 Potline operation--The plant was built in 1965 using European technology. Its three computer-controlled potlines have a total capacity of 265,000 ton/year. Each potline has 240 cells in 4 rows of 60 cells per row, installed in 2 buildings, for a plant total of 720 cells. Each building consists of 2 single-row potrooms with side-wall ventilation on the outside walls and a corridor between the center walls, so that there are 4 potrooms per potline or 12 potrooms for the whole plant. The cells are set into the potroom floor, but the potrooms have no basements.

Each cell has 18 anode assemblies, 9 to a side. Each assembly consists of three small rectangular carbon anode blocks, two copper branch rods to a block - six rods to an assembly. The six branch rods are connected to a center rod that introduces electrical current. The

cells are designed for 4 volts and 130,000 amperes, and are among the lowest-voltage cells in the industry.

6.3.3.1.2 Secondary control system--The as-built secondary controls consisted of 30 fiberglass Ceilcote scrubbers per building, on a floor on top of the corridor between the potrooms but under the building roof. Each scrubber thus handled four cells. To reduce water effluent discharges, only 17 scrubbers per building are now operating -- about every other one -- and each thus handles emissions from about 7 cells.

Each scrubber consists of a horizontal spray section with 80 co-current spray nozzles, a 40-hp fan on the inlet, and a slat mist eliminator on the outlet. Each scrubber handles 104,000 scfm at 20 to 22°C and discharges through a 12- by 18-foot rectangular stack 18 inches above the peak of the potroom. This peak is 52 feet above the ground. A 40-hp pump recirculates the scrubbing water at 1200 gal/min from a hold tank beneath the scrubber. A small amount of water is bled off this scrubbing loop to a water treatment plant.

The secondary control system as installed cost $10 million.

6.3.3.1.3 Water treatment--In the water treatment plant, water from the scrubbers is treated with sodium aluminate to form cryolite. The cryolite is filtered on a vacuum drum filter and then dried in a kiln and recycled to the cells. This cryolite is of poor quality.

The water treatment plant was installed in 1971 for $1.45 million.

6.3.3.1.4 Primary control retrofit--Overall control efficiency with just the secondary system was low, and plant management started investigating improved control in 1970. After experimenting with small hoods over the gas holes in the crust, they constructed a Quonset hut over a cell to find out what was being emitted. They determined that fine particulates were the most difficult to control, installed a 20-cell ESP, and ran it for 6 months. The level of control obtained by ESP was not satisfactory. They also considered the venturi and determined that it lacked the proper level of control. At about that time, the plant designers had been investigating bag collectors, and the plant decided to abandon wet scrubbing for the injected alumina dry scrubbing system. The retrofit that was completed in the Spring of 1973 consisted of installing primary collection systems and injected alumina primary removal equipment on all three potlines.

6.3.3.1.5 Primary collection retrofit--Side-worked prebake cells must be worked manually along the entire side of a cell. Hence, the gas collection skirt at plant C consists of two nonsegmented doors, one on each side of the cell. Some of the cells have doors operated by air cylinder, others by air motor.

The doors have to be open about 10 percent of the time to change anodes and to add alumina by manually working the cells. The 20 cells whose primary exhausts were directed to the ESP prototype have doors that must also be opened to tap aluminum. The remaining 700 cells have small tapping doors in the cell doors, so the cell doors remain closed during tapping.

A door closes with its bottom edge on the potroom floor. This edge has an asbestos cloth seal. The closing doors hit the floor forcefully, generating considerable dust. The doors are made of steel because gas jets from the cells can cause holes in aluminum doors.

In the middle of the cell superstructure, two circular ducts pick up the primary exhaust and direct it upwards to a horizontal 12-inch circular branch duct that runs along the centerline of the cell. The primary exhaust rate is about 3000 acfm per cell at 200°F.

Duct headers run along the corridors between the potrooms, each header picking up branch ducts from 30 cells per potroom in line 1 and 15 cells per potroom in lines 2 and 3. The headers are rectangular and increase in size as they pick up more branch ducts. An average size is about 2 feet by 4 feet. Two headers join at the top of the corridor, one from each potroom, and the common duct passes through the roof to the control equipment in the courtyard. A secondary scrubber has been removed to accomodate each common duct. Line 1 has two common ducts, and two scrubbers were removed per building. Lines 2 and 3 have four common ducts, and four scrubbers were removed per building. Nothing else had to be torn down or moved to accomodate the retrofit equipment.

6.3.3.1.6 Primary removal retrofit--Each potline has two injected alumina units located in the courtyards between its two buildings, each unit servicing half of each building. Figure 6-18 is a general flow diagram for the injected alumina process at plant C. The process

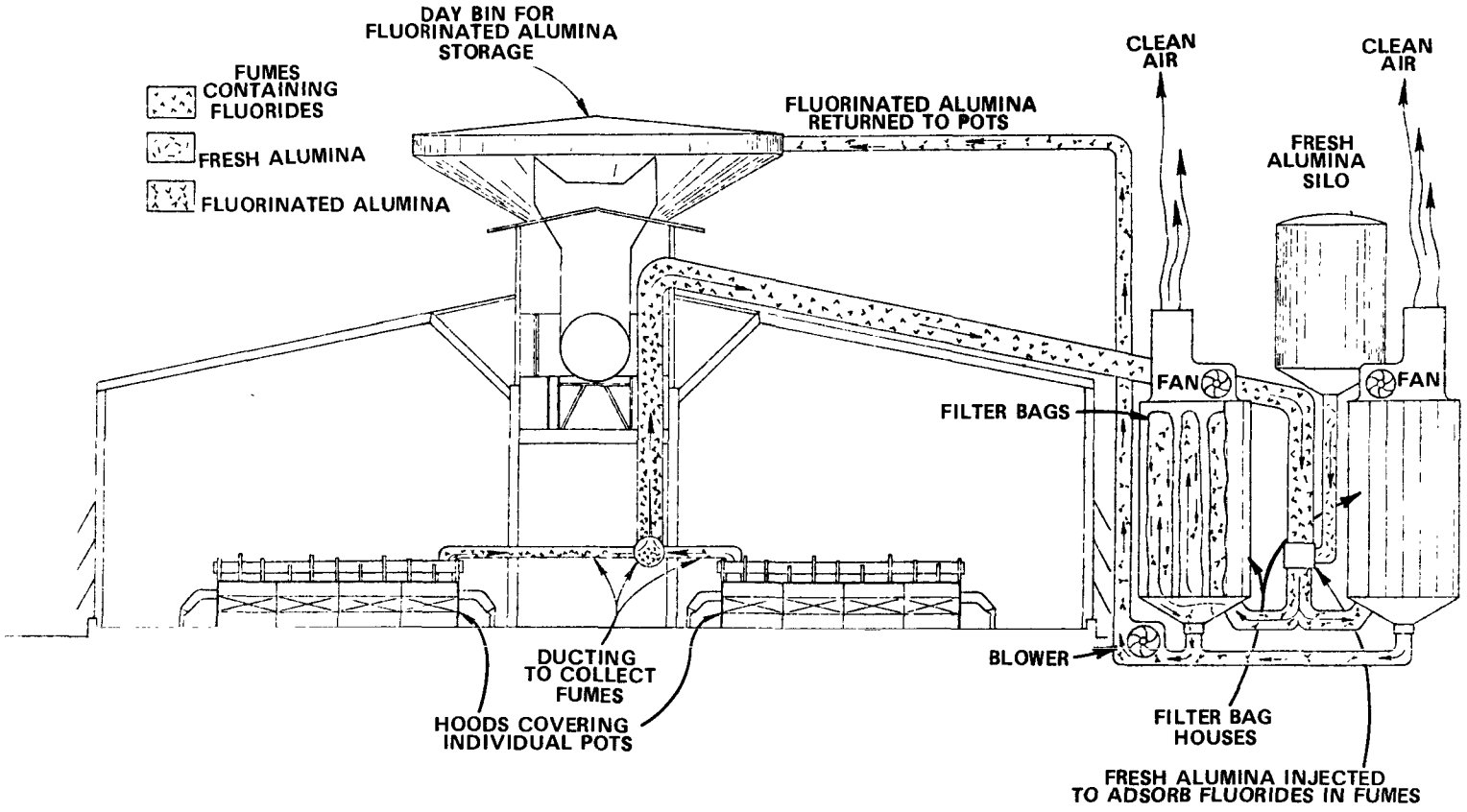

Figure 6-18. Flow diagram -- plant C -- injected alumina process.

involves reaction of gaseous fluoride with the alumina to be fed to the cells followed by baghouse solids collection. Alumina is injected into the flowing gas stream and the reaction occurs in a matter of seconds. As designed, 100 percent of the alumina fed to the cells should pass through the units. 97 percent passage is actually achieved.

Plant C's retrofit is somewhat unusual in that the fans are located downstream of the baghouses. This location helps keep the fan blades from scaling. Scale deposits will cause the fans to lose their dynamic balance. However, a downstream fan location requires that the baghouses operate under negative pressure, and a negative operating pressure requires a stiffer baghouse structure.

Potline 1 has injected alumina control units designed by Prat-Daniel-Poelman (PDP) and potlines 2 and 3 have control units designed by Alcan. The order of retrofit was 2-3-1. Both designs are unique in this country and will now be described in detail.

6.3.3.1.7 PDP design--Figure 6-19 is a schematic of the retrofit and Table 6-27 lists the major retrofit items for one of the two control units on potline 1. Each unit has a total of 12 venturis, 12 baghouses, 6 fans, and 6 stacks.

6.3.3.1.8 Alcan design--Figure 6-20 is a schematic of the retrofit and Table 6-28 lists the major retrofit items for one of the four control units on potlines 2 and 3. There are no venturis in the Alcan design. Each unit has a total of 22 baghouses, 22 fans and 22 stacks.

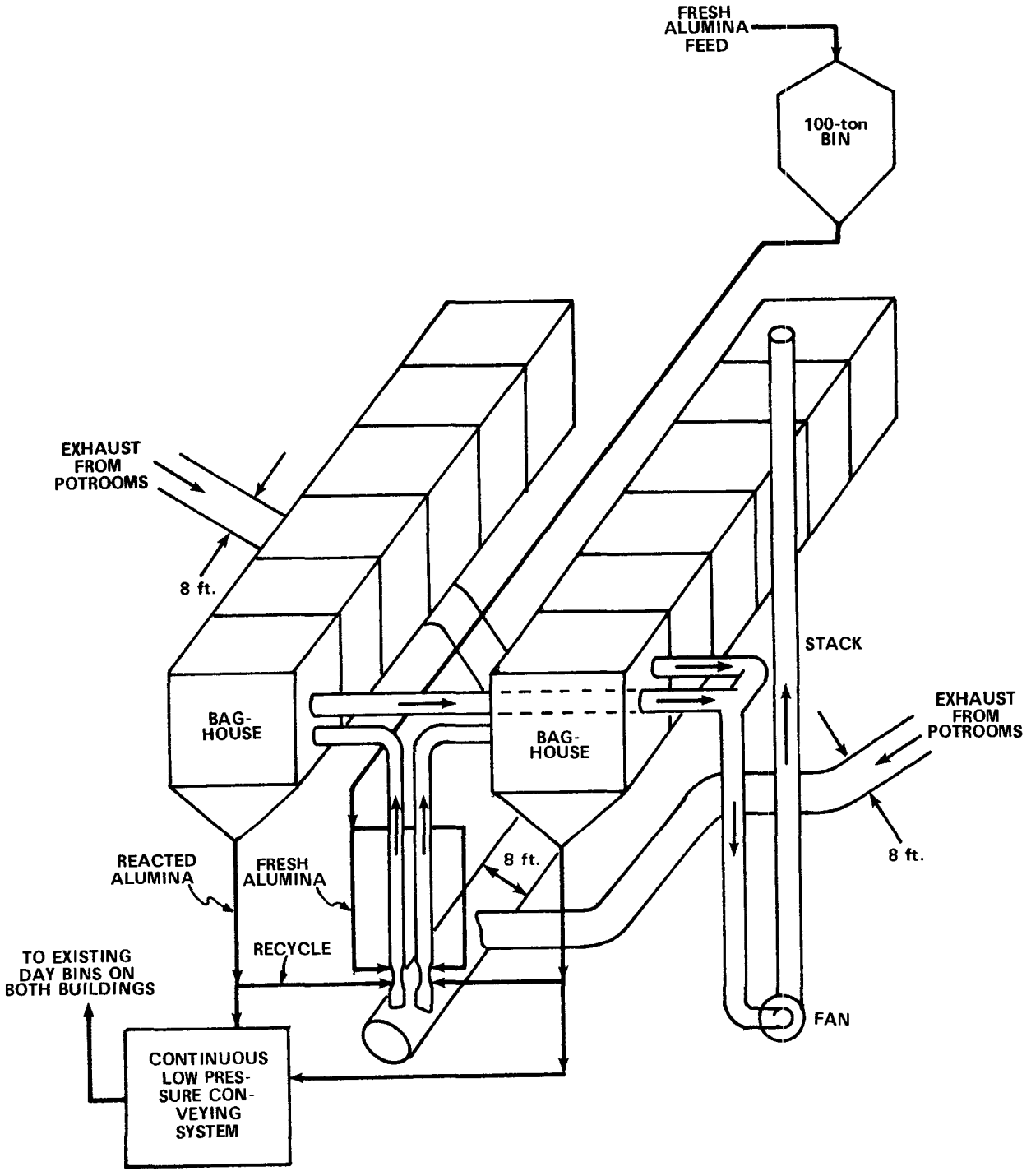

Figure 6-19. Retrofit schematic -- plant C -- PDP design (venturis, ducts, fan, stack, and solids handling are depicted for one pair of baghouses only).

Table 6-27. MAJOR RETROFIT ITEMS--PLANT C--PDP DESIGN

1. Two 8-foot ducts, one from each building (see Figure 6-19), join opposite ends and sides of an 8-foot horizontal duct. This horizontal duct runs underneath the control unit and feeds six paired venturi-baghouse subsections.

2. Six pairs of vertical venturis. Gas flows upward through the venturis each of which has two injection ports - one for fresh alumina and one for reacted alumina that is recycled from the baghouse. The ratio of recycled to fresh alumina is fixed at 20:1.

3. Six pairs of baghouses. Each baghouse handles 30,000 acfm of 200°F primary exhaust. Gas flow entering and leaving a baghouse is horizontal. Gas leaving one of the two baghouses in each pair passes horizontally through the opposite baghouse but not through the bags--there is no process connection--and the two baghouse exhausts join downstream of the opposite baghouse. Each baghouse is a rectangular box 18 feet square and 20 feet high with an inverted pyramid bottom gas inlet. The top of each baghouse is 40 feet above the ground. The bags are cleaned by shaking with reversed air flow. At the end of every 30 seconds, one baghouse is shaken for 4 seconds. Thus the total cycle time for all 12 baghouses is 6 minutes.

4. Six 250-hp fans located at ground level. Each fan exhausts a pair of baghouses (60,000 acfm) and discharges to a 60-foot stack.

5. A 100-ton fresh alumina bin.

6. A continuous low-pressure conveying system to convey reacted and unrecycled alumina to the existing day bins on top of both pot-line 1 buildings.

7. Local controls mounted on the baghouse structure.

8. A roof of simple truss design covering the venturis, baghouses, and local controls. The roof is about 20 feet above the tops of the baghouses and is supported by 14 I-beams, 7 to a side.

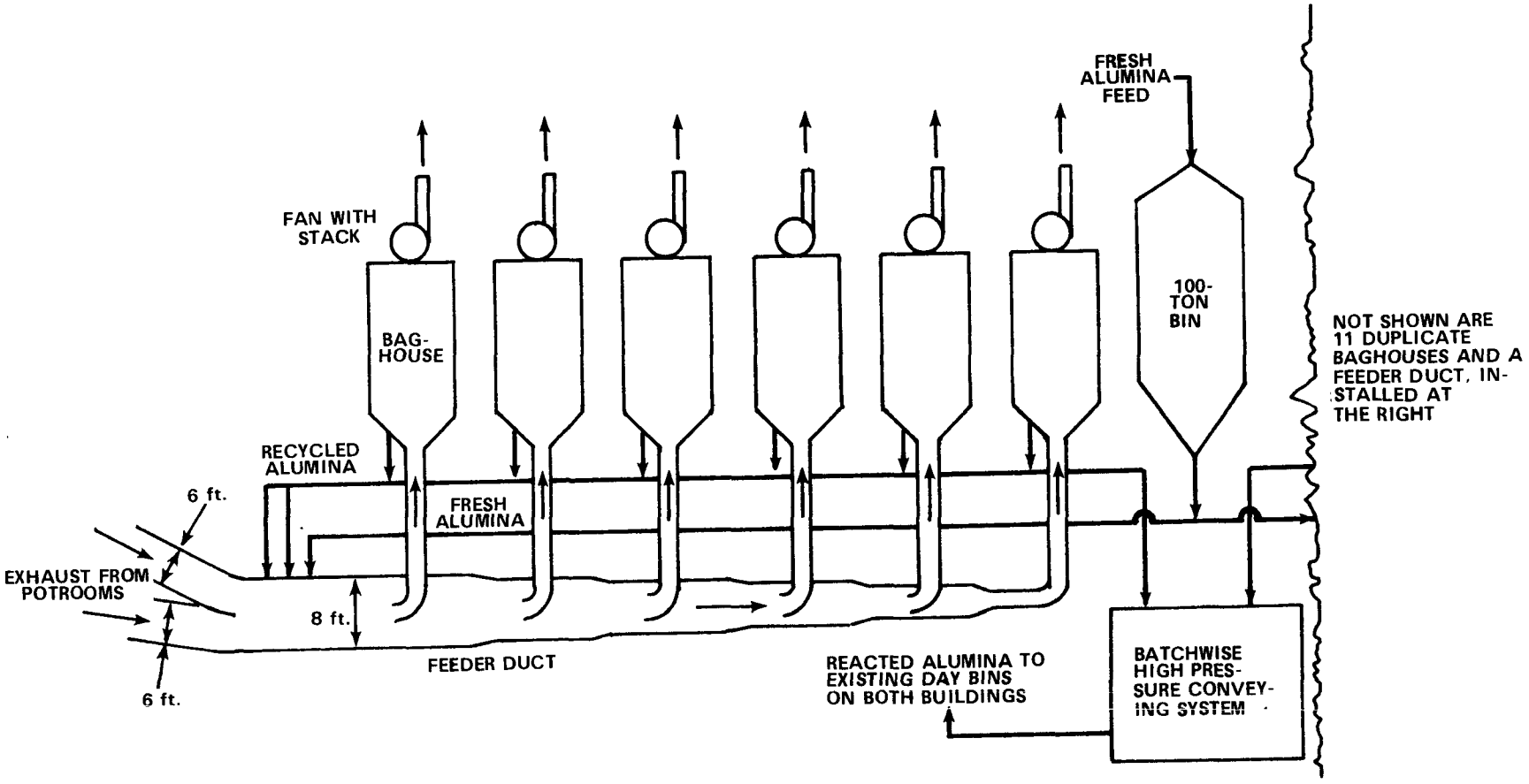

Figure 6-20. Retrofit schematic -- plant C -- Alcan design (side view -- 5 baghouses in a farther plane are not shown).

Table 6-28. MAJOR RETROFIT ITEMS--PLANT C--ALCAN DESIGN

1. Two 6-foot ducts, one from each building (see Figure 6-20), join an 8-foot duct that runs underneath the control unit and feeds 11 baghouses. The horizontal duct reduces in diameter after each pair of take-offs. There are three alumina injection ports--two for recycled alumina and one for fresh--in the 8-foot duct upstream of the control unit. The ratio of recycled to fresh alumina is variable from one to 10.

2. Ductwork identical to that just described under item 1 to feed a control unit that is installed to the right, and in reverse, of the control unit shown in Figure 6-20.

3. Twenty-two baghouses in 2 groups of 11 each as shown in Figure 6-20. Each baghouse except the eleventh (nearest the bin) has a twin beyond the plane of the paper. Each baghouse handles 16,400 acfm of 200°F primary exhaust. Gas flow entering and leaving a baghouse is vertical. Each baghouse is a rectangular box 10 feet square and 18 feet high with an inverted pyramid bottom gas inlet. The top of each baghouse is about 50 feet above the ground. The bags are cleaned by a variable 15- to 30-second high pressure jet air pulse.

4. Twenty-two 60-hp fans, one for each baghouse (16,400 acfm). Each fan sets on top of its respective baghouse and discharges to a stack. The stacks discharge to the atmosphere 60 feet above the ground.

5. A 100-ton fresh alumina bin.

6. A batchwise high-pressure conveying system to alternately convey reacted and unrecycled alumina to the existing day bins on top of each potline building.

7. Local controls mounted on the baghouse structure.

6.3.3.1.9 Retrofit increments of progress--Table 6-29 presents the time increments of progress for each of the three potline retrofits. As Table 6-29 shows, the four major contracts were awarded at different times for lines 2 and 3, but for line 1 they were awarded all at once. Compliance testing for line 2 started after several weeks of shakedown operation, approximately on September 15, 1972. The line 1 retrofit was operational when EPA personnel visited plant C on May 9, 1973.

For each of the potline retrofits, only 9 to 10 months elapsed between the date that the first contract was awarded and the date that both control units on that potline were operational. However, as mentioned in subsection 6.3.3.1.4, the plant started investigating improved control in 1970, which was 3 years prior to all control units being operational.

6.3.3.2 Emissions Before and After Retrofit

Table 6-30 shows average emissions before and after retrofit furnished by the company in October 1974. All of the quantities are expressed as pounds of total fluoride ion per ton of aluminum produced (lb/ton Al). The table shows the quantities generated at the cells; the quantities directed to the injected alumina primary removal equipment after retrofit (primary collection); the quantities escaping collection (secondary loading); the primary, secondary, and total emissions; the quantities removed by the secondary equipment that are sent to the cryolite recovery plant; and the quantities recovered by the dry primary retrofit and recycled to the cells.

Table 6-29. RETROFIT INCREMENTS OF PROGRESS--PLANT C

	Line 2		Line 3		Line 1	
Portion of control unit contract awarded						
Treatment system and baghouses	11/19/71		1/26/72		-	
Hood fabrication and installation	12/28/71		2/2/72		-	
Ducting fabrication and installation	2/11/72		2/16/72		-	
Electrical wiring	2/17/72		2/17/72		-	
Total project	-		-		7/7/72	
Construction started	January 1972		NA[a]		8/1/72	
	Unit 1	Unit 2	Unit 3	Unit 4	Unit 5	Unit 6
Construction completed	6/27/72	8/4/72	9/29/72	10/27/72	3/1/73	4/10/73
Unit operational	7/5/72	8/15/72	∿10/15/72	∿11/15/72	NA[a]	NA[a]

[a]Not available.

Table 6-30. EMISSIONS BEFORE AND AFTER RETROFIT--PLANT C--
LINES 1, 2, AND 3
(lb total F^-/ton Al)

	Before retrofit	After retrofit
Emissions		
Generation	45.5	45.5
Primary collection	-	37.8
Primary emission	-	0.4
Secondary loading	44.5	6.7
Secondary emission	9.0	0.9
Total emission	9.0	1.3
Secondary removal	35.5	5.8
Primary recovery	-	37.4

Monthly average inlet loadings to the primary and secondary control systems were 37.76 and 6.72 lb F/ton Al in September 1974. The generation level of 45.5 lb/ton Al is the sum of these loadings, plus a rough approximation that building leakage is 1.0 lb/ton Al. These loadings and the secondary emission of 9.0 lb/ton Al before retrofit were measured with the plant operating at capacity. The primary and secondary emissions of 0.4 and 0.9 lb/ton Al are based on 92 and 93 tests, respectively, during January-September 1974 when the plant was at or near full production. For these nine months, testing typically consisted of three tests per week on both the primary and secondary

systems. Each of the three tests was for emissions from a different potline and lasted 24 hours. Plant personnel have not been able to determine any difference between the performance of the PDP units and that of the Alcan units.

The emissions before retrofit in Table 6-30 correspond to a secondary removal efficiency of 80 percent and an overall control efficiency (including building leakage) of 78 percent on total fluoride for plant C. The emissions after retrofit correspond to a primary removal efficiency of 99 percent, a secondary removal efficiency of 87 percent, a primary collection efficiency of 83 percent and an overall control efficiency (including leakage) of 95 percent on total fluoride for plant C.

Two conclusions that can be drawn from the above efficiencies and Table 6-30 are:

1. Without secondary control, a primary collection efficiency of 83 percent would result in a secondary emission of 7.7 lb/ton Al and a total emission of 8.1 lb/ton Al for total fluoride after retrofit.
2. The retrofit reduced by 84 percent the quantity of total fluoride that is removed by the secondary control system and sent to the water treatment plant. This in turn has reduced the plant water effluent discharges.

6.3.3.3 Retrofit Capital and Annual Costs

6.3.3.3.1 Capital costs--Table 6-31 presents the total retrofit capital cost for the three potlines broken down into the major retrofit items. Assuming an annual capacity of 265,000 tons, $14,300,000 for retrofit is equivalent to a capital cost of $54 per annual capacity ton.

The duct costs in Table 6-31 include all ductwork from the cells to the 8-foot horizontal ducts underneath the control units. The control unit costs include the remaining ductwork, venturis, baghouses, fans, stacks, and solids handling for all the Alcan and PDP units. Nondistributed costs are primarily, but not exclusively, related to the control units and include such things as utilities (primarily compressed air) and instrumentation. Research and development (R&D) costs include only the development work that eventually became part of the retrofit. Hence, the costs are included for the hoods on the 20 cells whose primary exhausts were directed to the ESP prototype, but not for the ESP itself. Plant personnel are unable to determine the remaining R & D costs from their records. All contractor engineering and the plant R & D engineering costs that pertain to the installed retrofit are included in the Table 6-31 costs. Plant personnel are unable to determine the remaining plant engineering costs from their records.

The secondary scrubbers were the only assets that were retired as a result of the retrofit. They were installed for $1,166,000, were being depreciated over a 20-year life, and when retired had a book value of $907,000.

Table 6-31. RETROFIT CAPITAL COST--PLANT C--
LINES 1, 2 AND 3

Hoods	$3,160,000
Ducts	1,190,000
Emission control units	7,970,000
Nondistributed costs	1,250,000
Research and development	730,000
Total	$14,300,000

6.3.3.3.2 Annual costs--Table 6-32 gives annual costs for both the primary injected alumina retrofit and the secondary scrubbers as furnished by the company in March 1975. Assuming an annual aluminum production equal to the annual capacity of 265,000 tons, the total retrofit annual cost amounts to $12.99 per ton; the total secondary scrubber annual cost amounts to $7.07 per ton; and the plant's pollution control annual cost amounts to $20.06 per ton. The total retrofit annual operating cost of $936,000 amounts to $3.53 per ton.

The cost of producing compressed air for the retrofit is included in maintenance materials. The plant pays no royalty costs for the Alcan or the Prat-Daniel-Poelman designs. The secondary scrubbers are leased. Hence the depreciation cost of $1,190,000 is rent, and there are no charges for interest or taxes.

In Table 6-32, no credit is given for the alumina and fluoride recovered by the retrofit because the plant accounting system does not credit these recovered materials. Assuming a fluoride recovery rate of 37.4 lb/ton of aluminum produced (see Table 6-30), an annual aluminum production of 265,000 tons, and a fluoride cost of $0.25 per pound,[50] the value of the recovered fluoride would be $2,477,750 per year.

Table 6-32. 1974 ANNUAL COST--PLANT C--LINES 1, 2, AND 3

	Injected Alumina Retrofit	Secondary Scrubbers	Both
Operating costs:			
Labor incl. dir. supv.	413,000	141,000	554,000
Supplies	20,000	38,000	58,000
Electricity	130,000	104,000	234,000
Water	-	21,000[a]	21,000
Maintenance materials & labor	152,000	355,000	507,000
Bag replacement	221,000	-	221,000
Subtotal	936,000	659,000	1,595,000
Capital-related charges:			
Depreciation	973,000	1,190,000[a]	2,163,000
Interest	1,317,000	-	1,317,000
Insurance	9,000	7,000[a]	16,000
Taxes	176,000	-	176,000
Administrative & overhead	32,000	17,000	49,000
Subtotal	2,507,000	1,214,000	3,721,000
Total	3,443,000	1,873,000	5,316,000

[a]Estimated.

6.3.4 Case Description Summary

Table 6-33 shows actual retrofit emission reductions and cost for potroom retrofits at ten primary aluminum plants.[3-6,43] EPA personnel had visited seven of these plants (A-G) at the time the detailed case descriptions were developed. Since any one of these seven could have served as a retrofit case description, a comparison table and a rating sheet were prepared to select the best cases. The three cases that have been selected (plants A, B and C)--together with the discussion of primary collection, primary removal and secondary removal systems--are believed to adequately cover primary aluminum fluoride retrofit control techniques.

The emission numbers in Table 6-33 are average total primary and secondary total fluoride emissions expressed as pounds of fluoride ion per ton of aluminum produced. The increase in plant K emissions after retrofit is explained in subsection 6.3.4.2. The capital costs include direct and indirect costs. The indirect costs include engineering and, where a retrofit is underway, contingency and escalation costs. However, as noted in Section 6.3.3, not all the engineering costs are included in the plant C retrofit. Except for plants G and M, the retrofit costs are final or, where the retrofit is still underway, are the customary accurate appropriation request estimates. Plant G costs are based on written vendor quotations and should thus be reasonably accurate. Since the accuracy of plant M costs is questionable, this plant is separated from the others in Table 6-33. The capital costs are also shown adjusted to April 1974 using plant cost indices from Chemical Engineering magazine.

Table 6-33. POTROOM RETROFIT EMISSION REDUCTIONS AND COSTS FOR TEN PRIMARY ALUMINUM PLANTS

Cell type[a]	Plant code	Plant capacity short tons/yr	Total potroom emissions, lb F/ton Al		Retrofit capital cost, $/annual ton Al		Increased net annual operating cost, $/ton Al
			Before retrofit[b]	After retrofit[b]	Actual	Adjusted to April 1974	
CWPB	D	115,000	7.8	2.6	102	117	NA[c]
CWPB	F[d]	32,850	5.1	1.2	54	71	NA
CWPB	G	250,000	19.0	2.7	124	108	NA
CWPB	H	130,000	6.9	2.5	216	188	NA
SWPB	C	265,000	9.0	1.3	54	62	3.53[e]
SWPB	K	35,000	7.7	10.6	121	105	NA
HSS	B	210,000	5.4	2.9	92	98	0.81
HSS	A	80,000	9.3	2.4	141	157	-4.78[f]
VSS	E	91,000	4.2	2.0	64	81	NA
VSS	M	180,000	5.3	1.9	115	121	9.57

Table 6-33 (continued). POTROOM RETROFIT EMISSION REDUCTIONS AND COSTS FOR TEN PRIMARY ALUMINUM PLANTS

FOOTNOTES:

[a]CWPB - center-worked prebake cells, SWPB - side-worked prebake cells, VSS - vertical stud Soderberg cells, HSS - horizontal stud Soderberg cells.

[b]Average primary and secondary total fluoride emissions.

[c]NA = Not available.

[d]Results shown for only the one potline retrofitted.

[e]Increased gross annual operating cost; net not available. Net annual operating cost includes credits for recovered alumina and fluoride; gross does not.

[f]Negative sign means decreased net annual operating cost.

Plants A and B furnished the additional net annual operating cost and plant C furnished the additional gross annual operating cost for their retrofits as shown in Table 6-33. Additional net annual operating cost is also shown for plant M. These annual operating costs do not include capital-related charges.

Table 6-33 shows as much as a three-fold variation in cost for actual retrofits. Real-life differences between plants that can affect the cost include: the need to tear down varving types of existing control; the possible need to tear down other equipment and buildings; the extent to which support structure for the retrofit already exists; and, the need for installing or modifying primary collection systems. The latter includes the extent of modification that is dictated by potroom layout and by cell geometry and operating requirements.

To further illustrate the complexity of real-life situations, the vendor of the fluidized bed claims that the installation cost of fluidized bed removal equipment can vary greatly, from as low as about $30 per annual ton on some new prebake installations to levels such as shown for Plant D in Table 6-33 ($117 per annual ton). This four-fold variation in cost is largely determined by the following factors:[58]

1. The volume of cell gas to be treated per ton of metal produced. Smaller and older design prebake cells, such as those of Plant D, generate as much as twice the gas volume of some newer cell designs on a cubic foot per ton basis.

2. The physical layout of the existing plant, which affects:

   a. The length of the duct system.

   b. The availability of alumina storage tanks for storage both preceding and following the fume treatment system.

   c. The available space for locating the fume treatment system.

   d. The access to the area by large construction equipment used to erect the reactors, baghouses, etc.

   e. The availability of sufficient electrical power close to the site chosen for the control equipment.

This section illustrates the point that for a process as complex as a primary aluminum plant, a retrofit control must be tailor-made and should not be generalized as to costs or even as to method of emission control.

In the following subsections, capsule descriptions of each of the ten actual retrofits are given by cell type.

6.3.4.1 Center-worked Prebake Cells

Plant D completed a central primary fluidized bed dry scrubbing retrofit in July 1974. A total of 25 reactor-baghouses units were installed, along with supporting equipment, to replace 30 courtyard rotoclone-to-spray tower fume control units on the five plant potlines. Total system capacity is 1,250,000 acfm. The retrofit did not improve primary collection efficiency, although the capital cost included replacing the side shields on all 650 cells with new identically-designed covers. There was no secondary control before or after retrofit. Total retrofit capital cost was $11,766,900 which included the cost of removing and relocating the former control equipment.

Plant F completed a courtyard primary fluidized bed dry scrubbing retrofit on one of its five potlines in May 1970. A total of 10 reactor-baghouse units were installed, along with supporting equipment, to replace three courtyard dry ESP-to-dual spray tower fume control units. Total system capacity is 400,000 acfm, and the retrofit did not improve primary collection efficiency. There was no secondary control before or after retrofit. Total retrofit capital cost was $1,772,000. This did not include the cost of removing the six spray towers. The three ESPs were left in place because it was considered too costly to remove them.

Plant G has 12 courtyard dual multiclone-to-quadruple spray tower primary control units and plans to install a primary courtyard fluidized bed or injected alumina dry scrubbing retrofit on all six potlines by July 1978. As of January 1975, the retrofit capital cost estimate for the dry scrubbers was $28 million, the median of three vendor preliminary estimates. The retrofit also includes improved primary collection efficiency by modifications to the plant's 1032 cells. These modifications included tighter sealing between the hood side shields and around the anode stems, replacement of the curved side shields with braced, flat side shields, and installation of new end doors. Cost of these hooding modifications is estimated at $3 million for a total retrofit cost of $31 million. Table 6-33 shows the combined emission reductions and costs for the hooding-dry scrubbing retrofits. Plant G has no secondary control before or after retrofit.

Plant H plans to install a central primary control injected alumina dry scrubbing retrofit on all five potlines by November 1976. Present controls on four of the five potlines are courtyard primary multi-clone-to-spray tower units and 50 secondary cyclone scrubbers per potline along one edge of the potroom roof. Present controls on the other potline are primary central venturis with no secondary controls. The retrofit includes new hoods on all 700 cells which will improve primary collection efficiency to such a degree that the company plans to abandon all secondary controls. As of February 1975, the total retrofit capital cost was estimated at $28,046,000, equivalent to $216 per annual ton in Table 6-33. This figure does not include any costs for dismantling existing equipment. In addition, plant H plans to install two parallel sets of spray cyclone scrubber-to-wet ESP controls on its uncontrolled anode bake plant at a cost of $2,150,000.

6.3.4.2 Side-worked Prebake Cells

The Plant C retrofit is described in detail in Section 6.3.3. In April 1973, plant C completed a courtyard primary injected alumina dry scrubbing retrofit on all three potlines. There are six control modules with a total system capacity of 2,160,000 acfm. Former control consisted only of 180 roof-mounted secondary spray scrubbers. By necessity, the retrofit included the hooding of all 720 cells. The total retrofit capital cost of $14,300,000 included the removal of 20 secondary scrubbers.

Plant K plans to retrofit its one potline with a central primary injected alumina dry scrubbing system and to abandon the present spray screen secondary controls along the entire peak of the potroom roof. The retrofit also includes hooding all 90 cells and oversizing the removal equipment to handle primary exhaust from an additional 48 cells that are part of a possible plant expansion. The total retrofit capital cost was estimated to be $4,250,000 in March 1975. The plant plans to abandon secondary control because they consider a projected capital cost of $56 per annual ton for water treatment of their once-through scrubbing water to be economically excessive. The before retrofit emission of 7.7 lb F/ton Al is an average for the first five months of operation in 1974. The after-retrofit emission of 10.6 lb F/ton Al is based on an average generation level of 53 lb F/ton Al for the same five months and a projected plant overall control efficiency of 79.86 percent. The actual emission level will not be known until the retrofit has been completed in the summer of 1975 and then operated for several months. Plant personnel are hopeful that emissions will average 6-7 lb F/ton Al.

6.3.4.3 Horizontal Stud Soderberg Cells

The Plant B retrofit is described in detail in Section 6.3.2. Former controls were courtyard primary spray towers. The plant is installing fifteen 100,000 scfm and six 50,000 scfm courtyard primary spray tower-to-wet ESP units on the six potrooms comprising two-thirds of its capacity, and ten 100,000 scfm central primary wet ESP-only units on the three potrooms comprising the other one-third. The former does not include improved primary collection while the latter does. Improved collection on the latter includes an increased exhaust rate, new doors, and better sealing on 372 cells.

Estimated retrofit completion date is June 1975. There was no secondary control before or after retrofit. An October 1974 total retrofit capital cost estimate of $19,300,000 does not include costs of removing any of the 22 existing spray towers for the central retrofit.

The Plant A retrofit is described in detail in Section 6.3.1. The plant has installed a central primary dry scrubbing retrofit in two locations, each having 18 reactor-baghouse units and handling two potrooms, or half the plant's capacity. For half the capacity, the retrofit involves bypassing the 16 spray towers at the ends of the potrooms and improving primary collection efficiency on all 240 cells by an increased primary exhaust rate. For the other half, the retrofit involves using the central ductwork of the existing cement blockhouse scrubbers and not improving primary collection efficiency. Total system capacity for the whole plant is 1,200,000 acfm. The retrofit was operational in September 1974. There was no secondary control before or after retrofit. A December 1974 total retrofit capital cost estimate of $11,313,000 includes demolition costs for half the retrofit. The bypassed spray towers and a 25- by 100-foot building were torn down, but the cement blockhouse scrubbers were not.

6.3.4.4 Vertical Stud Soderberg Cells

Plant E completed a secondary retrofit in November 1970 and a primary retrofit in February 1972 on all five of its potrooms. The secondary retrofit consisted of abandoning previously retrofitted roof monitor spray screen scrubbers and installing a new dormer-tunnel design that is shown in Figure 6-10, one dormer tunnel along one entire edge of each potroom roof. The primary retrofit

consisted of adding eight 12,000 acfm and four 6,000 acfm wet ESPs downstream of 20 previously retrofitted courtyard bubbler-scrubbers. The ESP retrofit did not improve primary collection efficiency. Table 6-33 shows the combined emission reduction and costs for the dormer-tunnel and ESP retrofits. Retrofit capital costs were $4,155,078 and $1,662,701 for the secondary and primary retrofits, respectively. The primary retrofit included removal of the plant's 20 multiclones.

Plant M has ten potrooms, courtyard multiclone-to-venturi primary controls and no secondary control. It has been developing a foam scrubber secondary control system. If this scrubber proves too ineffective or costly, the plant will revert to installing spray screen secondary controls. An EPA contract study estimated that, in December 1973, roof mounted powered spray screen scrubbers would cost $20,688,000 or $115 per annual ton to reduce total fluoride emissions to 1.8 lb F/ton Al. There would be 60 scrubbers and 60 fans per potroom, or 600 apiece for the plant. Total system capacity would be 25,800,000 acfm with a liquid-to-gas ratio of 5 gallons per thousand acfm. The retrofit would also include 20 recirculating pumps, 10 recirculating tanks, six miscellaneous pumps, and one clarifier. The scrubber water would be lime treated. The contractor estimated that final installed costs for other systems, such as a foam scrubber, would not vary more than about 30 percent from that of the spray screen. A December 1973 annualized operating cost estimate of $1,723,000 is equivalent to $9.57 per ton.

6.4 DESIGN, INSTALLATION AND STARTUP TIMES FOR RETROFIT CONTROLS

The emission control retrofit cases studied and described in Section 6.3 have shown that the upgrading of fluoride emission controls or the initiation of control for a primary aluminum plant is a major engineering undertaking. Such a project does not involve the installation of one simple item of control equipment, but instead involves complex controls which may be several in number. Associated with the controls are storage and surge tanks, conveyors, fans, and long lengths of huge ductwork along with the necessary foundations, structural steelwork and electrical drive systems.

Table 6-34 shows the approximate sequence of activities which are necessary to design and install an improved air emission control system in a primary aluminum plant. The sequence of work outlined is not necessarily normal, but it should apply to periods such as the summer of 1974, when structural steel had particularly long delivery time. Obviously, such steel would be ordered as soon as possible--in fact, even before the full requirement is known. Thus, some parts of item 5 may not be firm until item 7 and item 11 are done. Similarly, it will be understood that other items of Table 6-34 may overlap in time.

Figure 6-21 illustrates that the activities in a big engineering job--such as retrofitting controls to a primary aluminum plant--tend to progress in a continuous, non-stepwise manner. This is because there is so much to do; at a given time, numerous items are in various stages of design, procurement, and construction. The four curves in Figure 6-21 show the typical progress for the named activites throughout

Table 6-34. SEQUENCE OF MAJOR ACTIVITIES IN DESIGN AND CONSTRUCTION OF AIR EMISSION CONTROL FOR AN EXISTING PRIMARY ALUMINUM PLANT

1. Process design and flow diagram.
2. Engineering flow diagram and preliminary plot plans.
3. Specification and procurement of major items such as dry scrubbers, and fans. Long delivery items first.
4. Ductwork and piping arrangements, specification, and procurement.
5. Structural steel design.
6. Foundation design.
7. Specification of minor items, obtainable without complete drawings, such as pumps and materials handling equipment.
8. Design of electrical starters, switchgear and distribution system.
9. Specification of instruments.
10. Receipt of certified dimension drawings of dry scrubbers, storage tanks, conveyors, fans.
11. Dimension drawings for ductwork.
12. Release of foundation and structural steel drawings.
13. Start construction. Site preparation, necessary removals or relocations will have already taken place.
14. Complete the pipe and ductwork takeoffs, and drawings for field supports.
15. Release drawings and material listings for construction.
16. Complete underground installations.
17. Complete foundations.
18. Delivery of structural steel and major items of equipment.
19. Erect major items of equipment.
20. Install ductwork and conveyors.
21. Install piping.

Table 6-34 (continued). SEQUENCE OF MAJOR ACTIVITIES IN DESIGN AND CONSTRUCTION OF AIR EMISSION CONTROL FOR AN EXISTING PRIMARY ALUMINUM PLANT

22. Install electrical.

23. Install instrumentation.

24. Startup.

25. Source testing and analytical.

26. Compliance with air pollution control regulations.

---

the job. The relative positions of the curves vary with the actual job and the graph is diagrammatic only. However, each line tends to approach linearity in the 25-75 percent completion interval. This figure shows that process design usually continues into the early stages of procurement. Engineering also continues well into the construction period. For this reason, total time requirements are best estimated from experience and cannot be derived by adding the time requirements for design, ordering, manufacture, delivery, installation and startup as can be done for one simple control.

One important step that is almost wholly out of control of the customer or the control official is the construction item delivery time. Table 6-35 gives some historical delivery times for items which are very important in installing emission controls at primary aluminum plants. The historical variation is somewhat obscured because data extending back to the Korean war period (when deliveries were very long) is not available. However, deliveries greatly increased from 1973 to 1974, and many lead times passed all previous

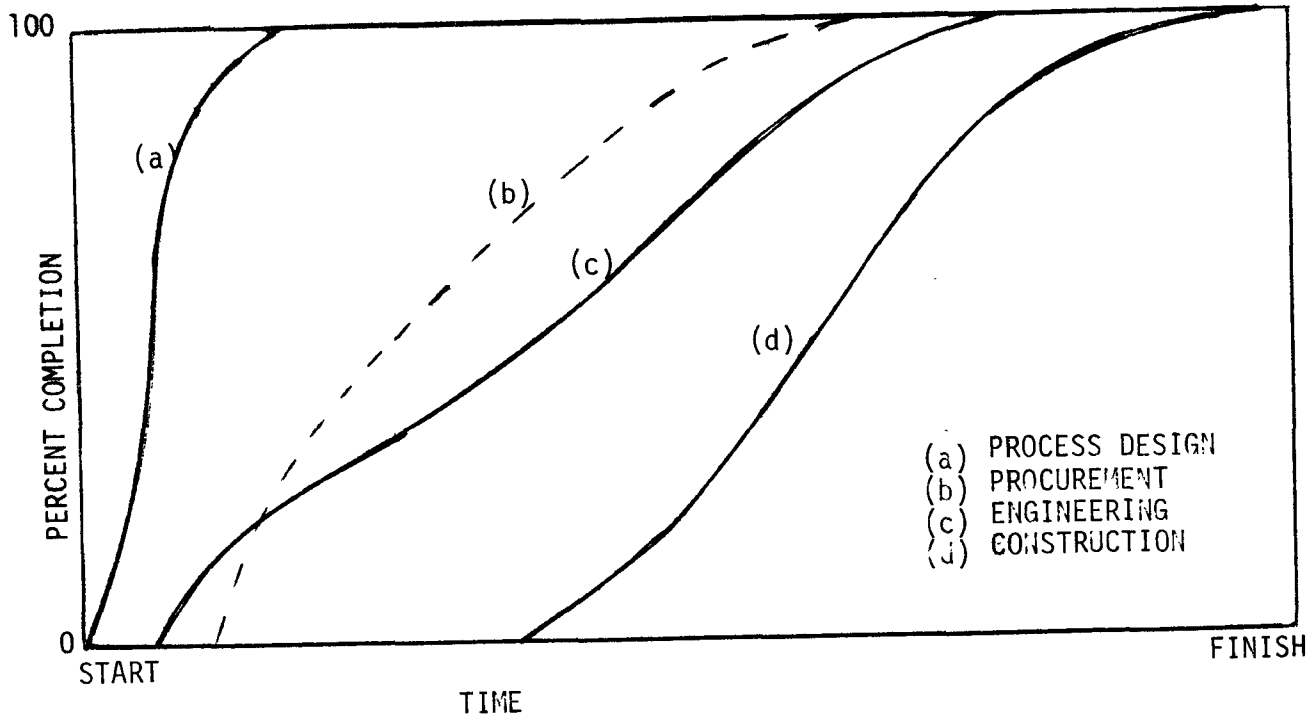

Figure 6-21. Diagrammatic representation of activity schedules on a major process industry construction project.

Table 6-35. DELIVERY TIMES FOR ITEMS REQUIRED TO CONSTRUCT EMISSION CONTROLS FOR PRIMARY ALUMINUM PLANTS [59,60]

Construction Items	Delivery Times (weeks)						Remarks
	1960	1966	1969	1971	1973	May 1974	
Structural steel	17-21	23-30	21-28	23-31	27-35	34-50	>500 tons
Ductwork	10-14	10-14	17-22	18-23	18-23	32-37	
Fans & blowers	26	30		25	26	26	Large
Airslides			17-19	17-19	20-22	28-30	
Motors			12	12	14	36	No specials
Electrical controls			13	13	15	25	AC standard
Electrical switch gear			23	21	21	35	≤ 600 volt

bounds. Table 6-35 represents the experience of an aluminum company doing its own purchasing. Another company reports up to 52 weeks for delivery of switchgear.[61] A contractor reports 61 weeks for blowers; and about 65 weeks for motors over 40 HP.[62] Deliveries may depend partly upon quantity bought, continuity of business through the years, and most-favored customer status. Fabrication and shipping consumes a significant fraction of the total time required to design and install emission controls.

The actual time in years that was required to add retrofit controls to eight aluminum plants is given in Table 6-36. Plant codes are the same as in Section 6.3. Except for plant F, the whole plant was retrofitted in each case. Only plants C, E, and H had secondary control and only plant E improved its secondary control, at a cost of about 65 percent of its total retrofit expenditure. Plant B built and operated a pilot plant during two of the 4-1/2 years of retrofit activity. The completion time of 5-1/2 years for plant G includes 3 years for improved cell hooding and 3 years for dry scrubber installation. The 3 years for improved hooding is due to a claimed economic advantage for modifying cells over the normal 3-year life of their cathode linings. Had plant G so elected, the dry scrubber installation could have proceeded simultaneously with cell hooding improvements, reducing the completion time to about 3 years.

The actual time requirements shown in the last column of Table 6-36 are probably greater - on the average - than needed for enforcement purposes. In spite of the large capital tied up, there is no return, and the usual economic incentive for haste in startup is lacking. Any interferences with production during installation of controls are

Table 6-36. TOTAL CONSTRUCTION TIME FOR RETROFIT EMISSION CONTROLS FOR PRIMARY ALUMINUM PLANTS

Plant Code	Cell Type	Plant Capacity (tons/yr)	Retrofit Capital Cost ($)	Description of Retrofit Emission Controls	Time Required for Retrofitting (years)
A	HSS	80,000	11,300,000	Dry scrubbers-primary	2-1/2
B	HSS	210,000	19,300,000	Improved cell hooding and wet ESP-primary	4-1/2
C	SWPB	265,000	14,300,000	New cell hooding and dry scrubbers-primary	3
D	CWPB	115,000	11,800,000	Dry scrubbers-primary	3
E	VSS	91,000	5,800,000	Wet ESP-primary Dormer tunnel-secondary	2-1/2
F	CWPB	32,850	1,800,000	Dry scrubbers-primary (1 potline)	1-1/2
G	CWPB	250,000	31,000,000	Improved cell hooding and dry scrubbers-primary	5-1/2
H	CWPB	130,000	28,000,000	Improved cell hooding and dry scrubbers-primary	2

normally few and brief and, of course, the plant will make haste when these occur.

In view of the above discussion, and including some allowance for financing, a reasonable total time for retrofitting fluoride emission controls to a primary aluminum plant may be taken as about 3 years. Table 6-37 shows the approximate lead times required to reach a few important milestones in providing emission controls for an existing primary aluminum plant. The first item in the table can require a year or two if piloting must be done or if considerable cost study has not already been done. Also, for reasons shown by Figure 6-21, the time for item 2 must be given as a range.

In practice, enforcement officials should consider each plant on a case-by-case basis and they should require proof for the time requirements claimed for each milestone.

Table 6-37. INCREMENTS OF PROGRESS FOR INSTALLATION OF FLUORIDE EMISSION CONTROLS IN AN EXISTING PRIMARY ALUMINUM PLANT

Increments of Progress	Elapsed Time, weeks
Preliminary control plan and compliance schedule to appropriate agency	25
Award of major contracts	35 - 55
Start of construction	60
Completion of construction	124
Final compliance	130

6.5 REFERENCES FOR SECTION 6

1. Air Pollution Control in the Primary Aluminum Industry. Singmaster and Breyer, New York, NY. Prepared for Office of Air Programs, Environmental Protection Agency, Research Triangle Park, NC under Contract Number CPA 70-21. July 23, 1973.

2. Background Information for Standards of Performance: Primary Aluminum Industry. Volume 1: Proposed Standards. Emission Standards and Engineering Division, OAQPS, Environmental Protection Agency, Research Triangle Park, NC. October 1974.

3. Varner, B. A., Trip Report: Six Pacific Northwest Primary Aluminum Plants. Emission Standards and Engineering Division, OAQPS, Environmental Protection Agency, Research Triangle Park, NC. June 11, 1973.

4. Varner, B. A., Trip Report: Ormet Hannibal, Ohio Primary Aluminum Plant. Emission Standards and Engineering Division, OAQPS, Environmental Protection Agency, Research Triangle Park, NC. July 2, 1973.

5. Varner, B. A. and G. B. Crane, Report on 1975 Primary Aluminum Pacific Northwest Trip. Emission Standards and Engineering Division, OAQPS, Environmental Protection Agency, Research Triangle Park, NC. March 17, 1975.

6. Crane, G. B. and B. A. Varner, Trip Report to the Primary Aluminum Plant of Conalco at Lake Charles, LA. Emission Standards and Engineering Division, OAQPS, Environmental Protection Agency, Research Triangle Park, NC. March 28, 1975.

7. Personal communication from D. Rush, Singmaster and Breyer, New York, NY, to B. A. Varner, Emission Standards and Engineering Division, OAQPS, Environmental Protection Agency, Research Triangle Park, NC. February 25, 1974.

8. Letter from C. A. MacPhee, Reynolds Metals Company, Richmond, VA, to D. R. Goodwin, Emission Standards and Engineering Division, OAQPS, Environmental Protection Agency, Research Triangle Park, NC, dated November 19, 1974.

9. Letter from Dr. P. R. Atkins, Aluminum Company of America, Pittsburgh, PA, to B. A. Varner, Emission Standards and Engineering Division, OAQPS, Environmental Protection Agency, Research Triangle Park, NC, dated April 21, 1975.

10. Memorandum from G. B. Crane to S. T. Cuffe. Meeting with Conalco and Revere on Proposed Primary Aluminum 111(d) Standards. September 26, 1974. (Also meeting notes of Crane and B. A. Varner.)

11. Boyer, W. F., Jr., Arguments in Opposition to State Guidelines for Standards of Performance for Existing Primary Aluminum Plants (Second Draft of August 1974). Consolidated Aluminum Corporation, St. Louis, MO. September 23, 1974. pp. 6-8.

12. Letter from C. L. Keigley, Consolidated Aluminum Corporation, Lake Charles, LA, to G. B. Crane, Emission Standards and Engineering Division, OAQPS, Environmental Protection Agency, Research Triangle Park, NC, dated April 1, 1975.

13. Letter from J. L. Loyer, Howmet Corporation, Greenwich, CT, to D. R. Goodwin, Emission Standards and Engineering Division, OAQPS, Environmental Protection Agency, Research Triangle Park, NC, dated October 31, 1974. pp. 1-2.

14. Letter from Dr. P. R. Atkins, Aluminum Company of America, Pittsburgh, PA, to G. B. Crane, Emission Standards and Engineering Division, OAQPS, Environmental Protection Agency, Research Triangle Park, NC, dated January 30, 1975. p. 9.

15. Reference 14, above, p. 3.

16. Letter from Dr. P. R. Atkins, Aluminum Company of America, Pittsburgh, PA, to D. R. Goodwin, Emission Standards and Engineering Division, OAQPS, Environmental Protection Agency, Research Triangle Park, NC, dated June 20, 1974.

17. Letter from J. L. Byrne, Martin Marietta Aluminum, The Dalles, OR, to D. R. Goodwin, Emission Standards and Engineering Division, OAQPS, Environmental Protection Agency, Research Triangle Park, NC, dated October 10, 1974.

18. Letter from Dr. B. S. Hulcher, Reynolds Metals Company, Richmond, VA, to D. R. Goodwin, Emission Standards and Engineering Division, OAQPS, Environmental Protection Agency, Research Triangle Park, NC, dated June 28, 1974.

19. Reference 1, above, pp. 8-10 to 8-12.

20. Reference 1, above, p. 8-8.

21. Reference 1, above, pp. 8-27 to 8-29.

22. Reference 1, above, p. 8-22.

23. Cook, C. C. and L. L. Knapp. Treatment of Gases Evolved in the Production of Aluminum. U.S. Patent No. 3,503,184. March 31, 1970.

24. Cook, C. C. and G. R. Swany. Evolution of Fluoride Recovery Processes Alcoa Smelters. In: Light Metals 1971. New York, NY. Proceedings of Symposia 100th AIME Meeting, March 1-4, 1971.

25. Cook, C. C., G. R. Swany, and J. N. Colpitts. Operating Experience with the Alcoa 398 Process for Fluoride Recovery. Journal of the Air Pollution Control Association. 21, August 1971.

26. Cochran, C.N., W. C. Sleppy, and W. B. Frank. Chemistry of Evolution and Recovery of Fumes in Aluminum Smelting. TMS of AIME Paper No. A70-22. February 16, 1970.

27. Reference 1, above, p. 5-27.

28. Varner, B. A., Trip Report: Trip to Alcoa (Badin, N.C.) Aluminum Plant, Standards Development and Implementation Division, SSPCP, Environmental Protection Agency, Research Triangle Park, N.C. August 21, 1972.

29. Reference 1, above, pp. 5-14 to 5-17.

30. Reference 1, above, p. 5-29.

31. Reference 1, above, p. 5-34.

32. Control Techniques for Particulate Air Pollutants. National Air Pollution Control Administration, Washington, D. C. Publication Number AP-51. January 1969. p. 54.

33. Reference 1, above, p. 5-40.

34. Reference 1, above, pp. 5-34 to 5-40.

35. Reference 1, above, pp. 5-29 to 5-33.

36. Reference 32, above, pp. 81-96.

37. A Manual of Electrostatic Precipitator Technology. Southern Research Institute, Birmingham, Alabama. Prepared for National Air Pollution Control Administration, Cincinnati, Ohio under Contract Number CPA 22-69-73. August 25, 1970.

38. Callaioli, G., et al. Systems for Gas Cleaning in Electrolytic Cells of Montecatini Edison Aluminum Plant. TMS of AIME Paper No. A70-57. February 16, 1970.

39. Byrne, J. L. Fume Control at Harvey Aluminum. (Presented at Annual Meeting Pacific Northwest Section, Air Pollution Control Association. Spokane, Wash. November 16 - 18, 1970).

40. Calvez, C. et al. Compared Technologies for the Collection of Gases and Fumes and the Ventilation of Aluminum Potlines. (Presented at the AIME Meeting, Chicago. December 11 - 16, 1967.)

41. Moser, E. The Treatment of Fumes from Primary Aluminum Reduction Plants. (Presented at International Conference on Air Pollution and Water Conservation in the Copper and Aluminum Industries. Paper Number 12. October 21-23, 1969).

42. Letter from W. F. Boyer, Jr., Consolidated Aluminum Corporation, Lake Charles, La., to B. A. Varner, Emission Standards and Engineering Division, OAQPS, Environmental Protection Agency, Research Triangle Park, N.C., dated June 25, 1974.

43. Ponder, T. C. and R. W. Gerstle. Particulate and Fluoride Emission Control, Anaconda Aluminum Company, Columbia Falls, Montana. PEDCo-Environmental, Cincinnati, Ohio. Prepared for Division of Stationary Source Enforcement, Environmental Protection Agency under Contract Number 68-02-1321. February 1974.

44. Air Contaminant Discharge Permit Application. Test Reports. Ammax Pacific Aluminum Corporation, Warrenton, Oregon. June 1974.

45. Letter from J. J. Miller, Amax Aluminum Company, San Mateo, Calif. to D. Trerice, Kaiser Engineers, Oakland, Calif., dated June 19, 1974. In: Air Contaminant Discharge Permit Application. Test Reports. Amax Pacific Aluminum Corporation, Warrenton, Oregon. June 1974.

46. Memorandum from G. B. Crane to S. T. Cuffe. Retrofitting Secondary Scrubbers at Existing Primary Aluminum Plants. Scrubber Efficiencies. Emission Standards and Engineering Division, OAQPS, Environmental Protection Agency. July 22, 1975.

47. Reference 1, above, p. 5-49.

48. Reference 1, above, p. 7-13.

49. Reference 3, above, pp. 33-39. (Corrected).

50. Reference 1, above, p. 8-31.

51. Reference 3, above, pp.3-8. (Corrected).

52. Miller, I., and J. E. Freund. Probability and Statistics for Engineers. Englewood Cliffs, N. J., Prentice-Hall, 1965. pp. 349, 350, 413.

53. Development Document for Effluent Limitations Guidelines and New Source Performance Standards for the Primary Aluminum Smelting Subcategory of the Nonferrous Metals Manufacturing Point Source Category. Effluent Guidelines Division, Office of Air and Water Programs, Environmental Protection Agency, Washington, D.C. Report Number EPA-440/1-74-019-d. March 1974.

54. Reference 53, above, p. 43.

55. Reference 53, above, p. 3.

56. Reference 53, above, p. 99.

57. Reference 3, above, pp. 22-27.

58. Letter from Dr. P. R. Atkins, Aluminum Company of America, Pittsburgh, Pa., to B. A. Varner, Emission Standards and Engineering Division, OAQPS, Environmental Protection Agency, Research Triangle Park, N.C., dated July 23, 1973.

59. Personal communication from Dr. P. R. Atkins, Aluminum Company of America, Pittsburgh, Pa., to B. A. Varner, Emission Standards and Engineering Division, OAQPS, Environmental Protection Agency, Research Triangle Park, N.C. June 25, 1974.

60. Purchasing Lead Time Reports. Aluminum Company of America, Pittsburgh, Pa. August 1969, August 1971, August 1973, May 1974.

61. Letter from A. L. Morgan, PPG Industries, Inc., Pittsburgh, Pa., to B. A. Varner, Emission Standards and Engineering Division, OAQPS, Environmental Protection Agency, Research Triangle Park, N.C., dated May 30, 1974.

62. Personal communication from R. Davis, Chemical Construction Corporation, New York, N.Y., to B. A. Varner, Emission Standards and Engineering Division, OAQPS, Environmental Protection Agency, Research Triangle Park, N.C. May 31, 1974.

7. COSTS OF ALTERNATIVE FLUORIDE EMISSION CONTROLS

7.1 INTRODUCTION

This chapter presents the status of fluoride emission control for all domestic primary aluminum plants as of early 1975. It also illustrates the application of available control strategies to two selected plant examples from each of the four cell types. The effect on emissions of each successive control is shown. Also, cost models are developed and used to estimate the capital and annualized costs of the above control strategies. Other plants than those illustrated here can be investigated for emission reductions and costs in an analogous matter. In general, cost modules cannot apply closely to any actual plant: they are approximations, and are especially useful in showing cost comparisons among various degrees and kinds of control.

Plant code numbers will be spoken of and tabulated in various tables in this Section. This is done because EPA wishes to avoid identifying plants, production rates, and other items which may be proprietary, but are unnecessary to the mission of this document. No meaning should be sought in the ordering of the code numbers, nor in the numerous uppercase letters used.

7.2 SELECTION OF ALTERNATIVE CONTROL LEVELS

Table 7-1 presents the structure of the domestic primary aluminum industry by cell type. Slight differences in plant capacity exist between this table and Table 3-1. This is because Table 7-1 includes planned capacity additions.

Table 7-2 presents the total gaseous plus particulate fluoride emissions that each domestic plant would be expected to have in the absence of 111(d) regulations, organized by cell type and with existing controls. Existing plant emission control, average cell evolution rates, and collection and removal efficiencies were obtained for the combinations that describe existing plant control situations in Table 7-2. Most of the evolution rates, primary and secondary loadings, and emissions were taken from Section 114 letter responses received from plants representing 100 percent of domestic VSS, HSS, and SWPB capacity, and 86 percent of CWPB capacity. These responses were supplemented and modified as necessary with trip reports, letters, phone memoranda and other EPA file information.

Table 7-3 adds alternate control systems for successive steps from existing to better control combinations. The following illustrates the general procedure that has been made specific by Table 7-3 with two plants from each of the four primary aluminum cell types,

a. First: install best available hooding (primary collection) for cell type, if needed.

Table 7-1. PRIMARY ALUMINUM PLANT CAPACITY BY CELL TYPE (thousands of annual tons)[b]

Company	VSS[a]	HSS[a]	CWPB[a]	SWPB[a]	Total
Alcoa	245	--	1390	--	1635
Reynolds	--	704	255	17	976
Kaiser	--	341	369	--	710
Martin Marietta	210	--	--	--	210
Anaconda	180	--	120	--	300
Conalco	--	--	--	175	175
Eastalco	--	--	--	174	174
Intalco	--	--	--	260	260
Revere	--	--	--	112	112
Noranda	--	--	140	--	140
Ormet	--	--	250	--	250
Nat'l Southwire	--	--	180	--	180
Total	635	1045	2704	738	5122

[a]VSS vertical stud Soderberg; HSS - horizontal stud Soderberg; CWPB - center-worked prebake; SWPB - side-worked prebake.

[b]Spring 1975

Table 7-2. TOTAL FLUORIDE EMISSIONS BY CELL TYPE WITHOUT 111(d) REGULATIONS

Cell Type	Plant No.	Cell Average	Total Fluoride Emissions, lb F/ton Al: Primary	+	Secondary	=	Total
VSS	19	42	0.03		2.0		2.03
	20	42	0.03		2.0		2.03
	5A	30.5	0.2		4.0		4.2
	9	53.5	0.8		4.5		5.3
	3B	42.9	0.4		8.6		9.0
Weighted Average VSS			0.4		4.8		5.2
SWPB	18	44.5	0.4		0.9		1.3
	17B	45.6	0.4		1.7		2.1
	23B	53	0.6		10.0		10.6
	11	37.3	0		10.6		10.6
	26	41.6	4.3		30.2		34.5
	24	48	0		48.2		49.0
Weighted Average SWPB			0.4		12.6		13.0
HSS	31C	32.1	0.3		1.6		1.9
	16B	30	0.8		1.6		2.4
	13B	36.7	0.8		2.4		3.2
	25B	30	1.3		3.3		4.6
	31D	31.1	1.1		4.0		5.1
	30B	45	1.2		4.5		5.7
	28	28.4	3.5		4.3		7.8
	26	41.6	4.3		30.2		34.5
Weighted Average HSS			1.4		4.3		5.7
CWPB	8B	45.5	0.2		1.0		1.2
	15B	25.7	0.5		1.4		1.9
	2C	50	0.5		1.5		2.0
	14B	33.9	0.5		1.5		2.0
	1	42	0.5		1.5		2.0
	29B	40.1	0.5		2.0		2.5
	10	43.2	0.6		2.0		2.6
	6B	40	0.4		2.2		2.6
	22B	38	0.8		1.9		2.7
	7B	50	0.8		2.1		2.9
	7A	31.7	0.8		2.1		2.9
	21B	43	0.6		2.2		2.8
	4B	53	2.1		2.8		4.9
	8A	43.5	3.6		1.5		5.1
	5B	44.7	2.2		3.1		5.3
	12	41.5	1.8		8.3		10.1
	4A	65.6	8.7		3.8		12.5
	21A	43	11.9		2.1		14.0
	2B	43.2	4.4		9.9		14.3
	27	40.3	0		40.3		40.3
Weighted Average CWPB			1.8		4.5		6.3

Table 7-3. PRIMARY ALUMINUM CONTROL STRATEGIES

Plant Code	Emission Controls Required for the Specified Average Fluoride Emission: Hooding	Primary (1°) Controls	Secondary (2°) Controls	Average Fluoride Evolution lb/ton Al	Efficiencies: 1° collection	1° removal	2° removal	Average Fluoride Emission lb/ton Al
			VSS CELLS					
5A	Best Available	Spray tower + wet ESP	None	30.5	87	99.2	0	4.2
	" "	Install waste water lime treatment	"	"	"	"	"	"
	" "	No change (water treatment handled by 2°)	Install spray screen and waste water lime treatment 1° and 2°	"	"	"	75	1.2
3B	" "	Fluidized bed dry scrubber	None	42.9	80	98.8	0	9
	" "	" " " "	Install spray screen and waste water lime treatment	"	"	"	75	2.6
			SWPB CELLS					
18	" "	Injected alumina dry scrubber	Spray scrubber	44.5	85	99	87	1.3
	" "	" " "	Install lime treatment of cryolite bleed stream	"	"	"	"	"
24	None	None	None	48	0	0	0	48.0
	Install primary collection system	Install injected alumina dry scrubber	None	"	80	98.5	"	10.2
	"	" " "	Install spray screen & waste water lime treatment	"	"	"	75	3.0

Table 7-3. PRIMARY ALUMINUM CONTROL STRATEGIES (Continued)

HSS CELLS

Plant Code	Emission Controls Required for the Specified Average Fluoride Emission: Hooding	Primary (1°) Controls	Secondary (2°) Controls	Average Fluoride Evolution lb/ton Al	Efficiencies: 1° collection	1° removal	2° removal	Average Fluoride Emission lb/ton Al
31C	Best Available	Spray tower + wet electrostatic precipitator (ESP)	None	32.1	95	99	0	1.9
	" "	Install lime treatment of cryolite bleed stream	"	"	"	"	"	"
	" "	" " "	Install spray screen and waste water lime treatment	"	"	"	75	0.7
26	Poor	Spray tower	None	41.6	27	62	0	34.5
	"	Install lime treatment of cryolite bleed stream	"	"	"	"	"	"
	Improve hooding	" " " "	"	"	90	"	"	18.4
	" "	Install wet ESP; remove spray tower; install lime treatment of cryolite bleed stream	"	"	"	96	"	5.7
	" "	" " " "	Install spray screen and waste water lime treatment	"	"	"	75	2.5
			CWPB CELLS					
8B	Best Available	Fluidized bed scrubber	None	45.5	98	99.5	0	1.2
	" "	" " "	Install spray screen and waste water lime treatment	"	"	"	75	0.5
4A	" "	Dry ESP + spray tower	None	65.6	94	86	0	12.5
	" "	Install waste water lime treatment	"	"	"	"	"	"
	" "	Install fluidized bed dry scrubber; remove dry ESP & spray tower; lime treatment unnecessary	"	"	"	98.5	"	4.7
	" "	" " " "	Install spray screen & waste water lime treatment -2°	"	"	"	75	1.9

b. Second: install best available primary control (fluoride removal) with water treatment, if needed; and,

c. Third: install spray screen or spray scrubber secondary control with water treatment.

Plants without initial primary control obviously require both steps a and b. It is assumed that all plants will, as a minimum, maintain their present control combinations. It is further assumed that all companies will add new retrofits that are the best that their cost class allows.

Average emission rates are calculated as:

$$EM = EV \left[1 - \left(\frac{n_{pc}}{100}\right) \left(\frac{n_{pr}}{100}\right) - \left(1 - \frac{n_{pc}}{100}\right) \left(\frac{n_{sr}}{100}\right) \right] \quad (7.1)$$

where:

EM = average emission rate, lb F/ton Al

EV = average evolution rate, lb F/ton Al

n_{pc} = primary collection efficiency, percent

n_{pr} = primary removal efficiency, percent

n_{sr} = secondary removal efficiency, percent

A removal efficiency of 75 percent is assumed for secondary control retrofits to all cell types. This is based on performance with primary control as reported in Section 6.2.3.[1]

Facilities to meet 1983 effluent guidelines are included for plants with wet primary or secondary control. The two water treatment systems considered are:

a. Waste water lime treatment of a bleed stream off the scrubber loop, with total recycle.

b. Cryolite recovery with lime treatment of the cryolite bleed stream.

System b. is considered only when the plant already has cryolite recovery. If a plant has a suitable water treatment system for secondary control, it is assumed that this system can additionally handle wet primary control effluent; but a suitable water treatment system for primary effluent is assumed to be undersized for handling secondary effluent and a new secondary effluent treatment system would be required. If a plant has cryolite recovery for primary effluent and adds secondary control, it is assumed that the secondary effluent will be lime treated. Addition of water treatment systems should be considered for plants not undergoing air pollution retrofits, because the plants might choose to abandon effluent-generating control systems in the absence of 111(d) regulations. Costs for lime treatment of the cryolite bleed stream are taken from the EPA effluent guidelines document.[2]

In Table 7-3, it is believed that each VSS plant presently has the highest primary collection efficiency achievable for that plant. Both plants have best available primary control. Plant 5A has no water treatment. Plant 3B has no need for water treatment with present controls.

In Table 7-3, it is assumed that no SWPB plant can achieve a primary collection efficiency higher than 80 percent unless it is already doing so. Plants achieving higher efficiencies are of French design, while Swiss-design plants are not capable of higher efficiencies for reasons detailed in Section 6.1.2. All SWPB primary retrofits would probably be dry scrubbing systems; these already predominate SWPB plants with primary controls. It is assumed that plant 24 would install injected alumina since it is operated by a small company, and injected alumina has

slightly lower capital and operating costs than the fluidized bed. A primary removal efficiency of 98.5 percent is assumed for the dry scrubbing retrofits, based on past performance at CWPB and SWPB plants. An efficiency of 75 percent is assumed for secondary removal based on demonstrated retrofit performance reported in Section 6.2.3. Plant 18 has cryolite recovery that will require lime treatment of the bleed to meet 1983 effluent guidelines. Plant 24 has no need for water treatment with present controls, or lack of controls.

It is assumed that all HSS plants except plant 26 have the highest primary collection efficiency achievable within existing cell constraints. Cell age and geometry affect the ability of an HSS plant to achieve high collection efficiencies, as explained in Section 6.1.1.2. Geometry restricts plant 26. Courtyard space limitations, or the necessity for balanced ducting layouts in central intallations, necessitates removal of the scrubbers that would otherwise precede the ESPs at plant 26. Gaseous fluoride control is--or would be--achieved by a scrubbing section in the ESP inlets. A primary removal efficiency of 96 percent is assumed for a primary retrofit for plant 26, based on experience at similar plants 25B, 31D, and 30B. Plants 31C, and 26 are believed to have cryolite recovery[3] and to require lime treatment of the bleed to meet 1983 effluent guidelines with present controls.

In Table 7-3, it is assumed that no CWPB plant can achieve a primary collection efficiency higher than 95 percent unless it is already doing so. All CWPB primary retrofits would probably be dry scrubbing systems, following the general practice of the industry. However, it is assumed that primary retrofit at 4A would be fluidized bed, the system marketed by the company operating these plants.

A primary removal efficiency of 98.5 percent is assumed for all dry scrubbing retrofits, based on past performance at CWPB and SWPB plants. Replacement of fluidized bed with fluidized bed should improve primary removal efficiency because there have been different generations of fluidized beds, with newer beds achieving 98.5 percent removal. For primary retrofits, all former control equipment is considered to be removed from service except multiple cyclones. Plant 4A has no water treatment. Hence, this plant will have to install lime treatment with recycle to meet 1983 effluent guidelines. All other CWPB plants except one have no need for water treatment with present controls.

The "best hooding + best primary control" option requires only two plants in Table 7.3 to retrofit primary controls, while the "secondary control" option additionally requires all plants but plant 18 to retrofit secondary controls. For this reason, intermediate levels are established; levels which would require some plants to install secondary control.

All "existing + water treatment" control options afford no improvement in emission control over levels expected without 111(d) emission guidelines and thus are not considered in measuring economic impact. The added water treatment is that which is adequate to meet 1983 effluent guidelines; it is assumed that these will universally have to be met.

The above analysis options do not consider CWPB and SWPB anode bake plant total fluoride emissions. Table 6-12 shows controlled bake plant emissions to be only 0.05 lb F/ton Al. Capital cost for such control is estimated at $10.49/annual ton Al, and annual cost at $5.79/ton Al.

Since these costs are small compared to potroom retrofit control costs and no bake plants are known to have effective fluoride control, it is assumed that these costs will be incurred at all prebake plants. Within the accuracy of the emission data, a controlled bake plant emission of 0.05 lb F/ton Al is so small that it was not considered.

7.3 CAPITAL AND ANNUAL COSTS FOR FLUORIDE EMISSION CONTROL OPTIONS

7.3.1 Procedure

Since primary aluminum plants consist of a grouping of modules (potlines), the control devices are also modular. This reduces the economies of scale advantage for the larger plants and also allows the calculation of capital and annualized costs on a per ton of capacity basis for use with any size of plant. However, the number of much greater interest is the cost in dollars per ton of aluminum actually produced. This can be calculated for each plant using either a historical or a forecasted operating ratio and dividing it into the annualized cost at capacity. The only exception to this modular approach is the waste water lime treatment facility. This was estimated from an EPA design.

7.3.2 Capital Costs

The module approach for capital costs is presented in Table 7-4. Modules are segregated by cell type. For instance, since all the vertical stud Soderberg plants have acceptable primary controls, only a spray screen secondary control to capture and remove emissions eluding primary control systems is presented. The center-worked and side-worked pre-baked plants can be modified by means of thirteen modules. One module provides water treatment for the cryolite bleed stream. Two modules can be used to improve the collection system. Two modules will

Table 7-4 . Control Modules for Upgrading Existing Aluminum Plants. Capital Costs

(September 1977 Dollars)

Control Module	Basic Capital Cost[a]	Capital Cost Adjustment Factor[b]	Old Plant Factor[b]	1977 Adj. Factor[c]	Adjusted Capital
	($/Ton Annual Capacity				
VSS					
1. Install spray screen secondary	$ 51.94	1.0	1.15	1.63	$ 97.36
CWPB and SWPB					
2. Lime treatment of cryolite bleed stream	--	--	--	--	2.43[d]
3. Improve hooding	6.18	1.6	1.15	1.63	18.54
4. Install primary collection system	22.69	1.0	1.15	1.63	42.53
5. Install Inj. Alum. dry scrubber-primary	32.41	1.08[e]	1.15	1.63	65.86
6. Install spray screen secondary	37.10	1.0	1.15	1.63	69.54
7. Remove dry ESP primary	5.46	0.75	1.15	1.63	7.68
8. Remove floating bed wet scrubber-primary	5.33	0.75	1.15	1.63	7.49
9. Install Fluidized bed dry scrubber-primary	37.10	1.084[e]	1.15	1.63	75.39
10. Remove coated bag filters-primary	10.00	0.75	1.15	1.63	14.06
11. Remove fluidized bed dry scrubber-primary	14.27	0.75	1.15	1.63	20.06
12. Remove multiple cyclone-secondary	0.87 (35.67/5.33)	0.75	1.15	1.63	8.19
13. Remove spray tower-primary	2.47	0.75	1.15	1.63	3.47
14. Install anode bake plant controls	--	--	--	--	20.49
HSS					
15. Lime Treatment of cryolite bleed stream	--	--	--	--	2.43[d]
16. Improve hooding	6.18	1.6	1.15	1.63	18.54
17. Install wet ESP primary	129.68	1.0	1.15	1.63	243.09
18. Remove spray tower-primary	4.34	0.75	1.15	1.63	6.10
19. Install spray screen-secondary	51.94	1.0	1.15	1.63	97.36
20. Remove floating bed scrubber-secondary	7.99 (35.67/5.33)	0.75	1.15	1.63	75.17

[a]Taken from reference 4. Significant figures were retained for identification in original reference. Removal cost is taken as 75% of direct installation change of original equipment.

[b]Reference 5.

[c]Adjust costs from January 1971 to September 1977.

[d]Taken from reference 6 and adjusted to September 1977.

[e]Weighted average gas flow adjustment factor from reference 7.

provide improvement of the primary removal system. The installation of a spray screen will improve the removal of secondary emissions. The final module represents control of the anode bake plant. Horizontal stud Soderberg (HSS) modules are similar to the pre-bake modules.

The numbers in the second column are the basic costs taken from reference 4. In the two cases where a ratio is used to multiply a base cost, the cost is listed as a primary module, but not as a secondary module in reference 4. However, the floating bed wet scrubber is listed both as a primary and as a secondary module. The cost ratio between the two is $35.67 for the secondary module divided by 5.33 for the primary module. This ratio of 35.67/5.33 is used to convert "Remove multiple cyclone" and "Remove floating bed wet scrubber" from primary to secondary modules.

The next column is the capital cost adjustment factor. The factor 1.6 for the hooding modules is derived from reference 5 which assumes that, in most cases, modifications will be made and new ducting added to the primary collection systems amounting to an arbitrary 160 percent of the estimated cost for main ducting in courtyard systems. It is further assumed that, when elements of existing control systems are changed from one type to another, the original element will be either bypassed without cost, or will be removed to provide physical space for the new element. In the latter case, the net cost of demolition, including salvage credit, is estimated to be 75 percent of the direct installation cost of equipment removed. The factor 1.08 represents the weighted average of the flow adjustment between the model used in reference 4 and a sampling of conditions existing in actual plants. The column labeled "1977 Adj. Factor" is the inflation adjustment using the Chemical Engineering Plant

Cost Index to convert reference 4 costs to September 1977. The final column represents the conversion of the basic costs to current costs with all the adjustments included.

Reference 6, the source of costs for the water pollution treatment of the cryolite bleed stream, did not contain costs for a wastewater lime treatment unit. Therefore, cost estimates were prepared for a treatment unit designed by the Emission Standards and Engineering Division of EPA. Since this treatment unit is not susceptible to the modular treatment, units were estimated for three sizes of primary aluminum plants, 78,000, 156,000, and 312,000 tons of aluminum per year. These costs are shown in Table 7-5.

7.3.3 Annualized Cost

Annualized costs are based on data in reference 4 just as were the capital costs. However, the updating adjustments are considerably different from those for capital costs. Operating labor is adjusted using the Department of Commerce Index of Hourly Earnings - Manufacturing. Electric power is adjusted using the Wholesale Price Index for Industrial Power. Circulating water, since most of its cost is in electricity for pumping plus a small amount for treating chemicals, is adjusted by a factor 10 percent higher than the electric power adjustment to account for this extra expense. Lime costs are adjusted using the Chemical Market Reporter quotations. Product recovery credits are based on data found in reference 4 updated from 1972. For aluminum returned to the cells, the ratio of current prices[8] to 1971 prices[9] for aluminum ingot was determined to be 1.8. This was applied to the unit price for the credit. The same publications were used to obtain the ratio of fluorspar

prices. This ratio was 2.0. Royalties are often tied to Wholesale Price Index (Industrial). The few cases where royalties are involved, this index was used.

In the cases where the modules specified the removal of control equipment, the annualized cost represents the savings resulting from not operating the equipment or the loss incurred by not realizing the recovery credits gained by operating the equipment.

Table 7-5. WASTE WATER LIME TREATMENT INVESTMENT[a] COST BY SIZE OF PLANT

(September 1977 Dollars)

	78,000 TPY	156,000 TPY	312,000 TPY
Installed Major Equipment	$828,000	$1,101,000	$1,477,000
Contingencies and Fee @ 20%	166,000	220,000	295,000
TOTAL	$994,000	$1,321,000	$1,772,000
Unit Cost, $/ton capacity	$12.74	$8.47	$5.67

[a] Process and instrumentation design by the Emission Standards and Engineering Division of EPA. Cost estimates prepared by vendor contacts by the Economic Analysis Branch, SASD, EPA.

In order to bring the treatment of fixed cost into line with EPA's current practice of combining interest and depreciation into a capital recovery factor, the fixed cost components of the annualized costs were changed from those found in the contract report.[10] These changes are detailed in Table 7-6.

The annualized costs, recalculated as outlined above are found in Table 7-7. The annualized costs for the waste water lime treatment appear in the next table - Table 7-8.

Since the waste water lime treatment unit is not calculated in the module basis, the investment and annualized costs for the three plant sizes are plotted in Figure 7-1 so that interpolation can be made for individual plants.

7.3.4 Cost-Effectiveness

Cost-effectiveness is defined as the annualized cost of operating a given control system divided by the number of pounds of pollutants captured by the system per year. When several systems are installed in succession, the total overall cost divided by the overall weight of pollutant captured is the "cumulative cost-effectiveness", shown in the next-to-last column of Table 7-9. Sometimes it is of interest to examine the stepwise effect of the addition of each of the several systems. This is referred to as the "incremental cost-effectiveness" shown in the last column in Table 7-9. This is obtained by dividing the annualized cost of each individual system by the additional pollutants captured by it. From this table, it appears that the installation of spray screen secondary control with its attendant waste water lime treatment is much less cost-effective than primary controls. In fact, it adds from 1 to 2¢/lb. to the cost of producing aluminum which sells for approximately 55¢/lb. at present. (February 1978)

Table 7-6. FIXED COST COMPONENTS

Component	Percent of Investment	
	Reference 10	EPA
Taxes and Insurance	2%	2%
Administration	5%	5%
Depreciation	8%	--
Interest	8%	--
Capital Recovery (15 yrs @ 10%)	--	13%
TOTAL	23%	20%

Table 7-7. CONTROL MODULES FOR UPGRADING EXISTING ALUMINUM PLANTS ANNUALIZED COST[a] ($/ton Aluminum Produced, in 1977 $)

Control Module	Net Annualized Cost (Credit)
VSS	
1. Install spray screen-secondary	$31.71
CWPB and SWPB	
2. Lime treatment of cryolite bleed stream	1.04
3. Improve hooding	4.64
4. Install primary collection system	11.56
5. Install injected alumina dry scrubber-primary	(1.76)
6. Install spray screen-secondary	22.84
7. Removal dry ESP-primary	1.69
8. Remove floating bed wet scrubber-primary	(7.94)
9. Install fluidized bed dry scrubber-primary	3.16
10. Remove coated bag filters - primary	1.14
11. Remove fluidized bed dry scrubber - primary	(3.16)
12. Remove multiple cyclone - secondary	(5.78)
13. Remove spray tower-primary	(4.12)
14. Install anode bake plant	5.79
HSS	
15. Lime Treatment of cryolite bleed stream	1.04
16. Improve hooding	4.64
17. Install wet ESP - primary	61.93
18. Remove spray tower - primary	(6.48)
19. Install spray screen - secondary	31.70
20. Remove floating bed scrubber - secondary	(77.79)

[a]Source: Reference 4 data updated as described in text.

Table 7-8. WASTE WATER TREATMENT PLANT OPERATING COST
(By Size of Aluminum Plant)
(September 1977 Dollars)

350 Days Operated/Year	Unit Cost	78,000 TPY	156,000 TPY	312,000 TPY
Annualized Cost				
Operating Costs				
A. Direct				
1. Supplies				
CaO 135 lb/ton Al. @	1¼¢/lb.	$131,600	$263,300	$526,500
$FeCl_3$ 0.135 lb/ton Al. @	4¢/lb.	400	800	1,700
Separan (AP-30) 0.00675 lb/ton	300¢/lb.	1,600	3,200	6,300
2. Operating Labor	$6.00/hr.	50,400	50,400	50,400
3. Supervision, 15% of 2		7,600	7,600	7,600
4. Utilities				
a. Electricity	3¢/KWH	10,300	20,700	41,400
b. Process Water	25¢/MGAL	15,800	31,500	63,000
5. Maintenance		22,100	25,800	33,400
6. Laboratory 30% of 2		15,100	15,100	15,100
7. Total Directs		$254,900	$418,400	$745,400
B. Indirects				
8. Taxes and Insurance (2% of capital)		19,900	26,400	35,400
9. Administration (4% of capital)		39,800	52,800	70,900
10. Capital Recovery (13% of capital)		129,200	171,700	230,400
11. Total Indirects		$188,900	$250,900	$336,700
Total Annualized Cost		$443,800	$669,300	$1,082,100
Unit Cost $/ton Al.		$5.69	$4.29	$3.47

Figure 7-1. Investment and Annualized Costs for Waste Water Lime Treatment Plants vs. Aluminum Plant Capacity

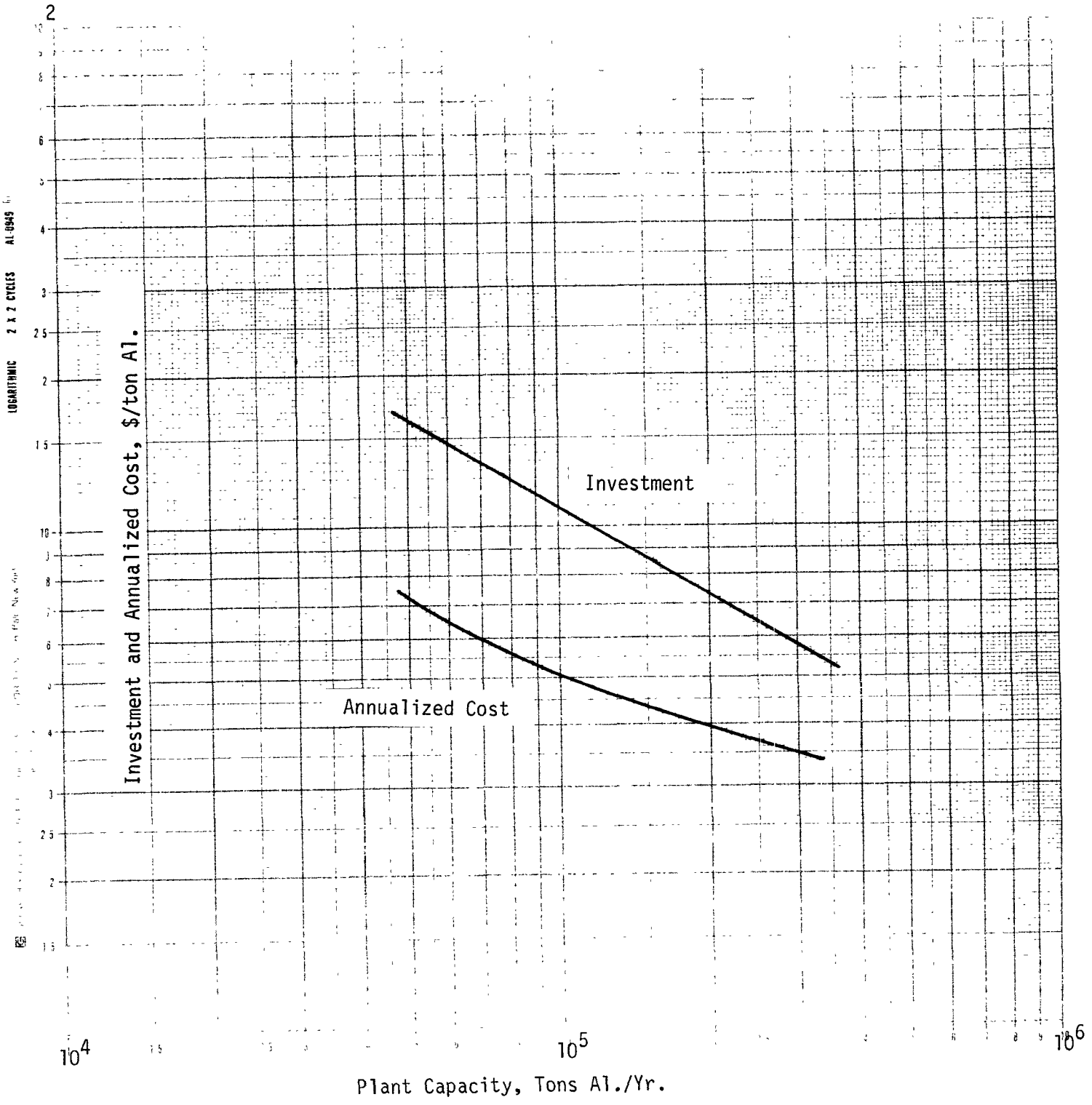

Table 7-9. PRIMARY ALUMINUM CONTROL STRATEGIES

VSS CELLS

Plant Code	Emission Controls Required for the Specified Average Fluoride Emission: Hooding	Primary (1°) Controls	Secondary (2°) Controls	Average Fluoride Evolution lb/ton Al	Unit Cost: Capital $/ton Al	Unit Cost: Annualized $/ton Al	Average Fluoride Emissions lb F/ton Al	Cost-Effectiveness: Cumulative $/lb F	Cost-Effectiveness: Incremental $/lb F
5A	Best Available	Spray tower + wet ESP	None	30.5	0	0	4.2	--	--
	" "	Install waste water lime treatment	"	"	14.70	6.50	4.2	--	--
	" "	No change (water treatment handled by 2°)	Install spray screen and waste water lime treatment 1° and 2°	"	84.24	29.34	1.2	9.78	7.61
3B	" "	Fluidized bed dry scrubber	None	42.9	0	0	9.0	--	--
	" "	" " " "	Install spray screen and waste water lime treatment	"	77.19	26.89	2.6	4.20	4.20

SWPB CELLS

Plant Code	Emission Controls Required for the Specified Average Fluoride Emission: Hooding	Primary (1°) Controls	Secondary (2°) Controls	Average Fluoride Evolution lb/ton Al	Unit Cost: Capital $/ton Al	Unit Cost: Annualized $/ton Al	Average Fluoride Emissions lb F/ton Al	Cost-Effectiveness: Cumulative $/lb F	Cost-Effectiveness: Incremental $/lb F
18	" "	Injected alumina dry scrubber	Spray scrubber	44.5	20.49*	5.79*	1.3	--	--
	" "	" " "	Install lime treatment of cryolite bleed stream	"	22.92	6.83	1.3	--	--
24	None	None	None	48	20.49*	5.79*	48.0	--	--
	Install primary collection system	Install injected alumina dry scrubber	None	"	128.88	15.59	10.2	0.41	--
	"	" " "	Install spray screen & waste water lime treatment	"	207.42	42.88	3.0	0.95	3.79

* Anode bake controls required on all prebake plants

Table 7-9. PRIMARY ALUMINUM CONTROL STRATEGIES (Continued)

HSS CELLS

Plant Code	Emission Controls Required for the Specified Average Fluoride Emission: Hooding	Primary (1°) Controls	Secondary (2°) Controls	Average Fluoride Evolution lb/ton Al	Unit Cost: Capital $/ton Al	Unit Cost: Annualized $/ton Al	Average Fluoride Emissions lb F/ton Al	Cost-Effectiveness: Cumulative $/lb F	Cost-Effectiveness: Incremental $/lb F
31C	Best Available	Spray tower + wet electro-static precipitator (ESP)	None	32.1	0	0	1.9	0	0
	" "	Install lime treatment of cryolite bleed stream	"	"	2.43	1.04	1.9	0	0
	" "	" " "	Install spray screen and waste water lime treatment	"	108.60	37.14	0.7	30.95	30.95
26	Poor	Spray tower	None	41.6	0	0	34.5	0	0
	"	Install lime treatment of cryolite bleed stream	"	"	2.43	1.04	34.5	0	0
	Improve Hooding	" " " "	"	"	20.97	5.68	18.4	0.35	0.35
	" "	Install wet ESP; remove spray tower; install lime treatment of cryolite bleed stream	"	"	272.59	62.17	5.7	2.16	4.45
	" "	" " " "	Install spray screen and waste water lime treatment	"	386.01	101.02	2.5	3.16	12.14
			CWPB CELLS						
8B	Best Available	Fluidized bed scrubber	None	45.5	20.49*	5.79*	1.2	0	0
	" "	" " "	Install spray screen and waste water lime treatment	"	102.43	34.21	0.5	48.87	40.60
4A	" "	Dry ESP + spray tower	None	65.6	20.49	5.79*	12.5	0	0
	" "	Install waste water lime treatment	"	"	29.39	10.19	12.5	0	0
	" "	Install fluidized bed dry scrubber; remove dry ESP and scrubber; lime treatment unnecessary	"	"	107.03	6.52	4.7	0.84	--
	" "	" " "	Install spray screen and waste water lime treatment - 2°	"	185.74	33.76	1.9	3.18	9.72

* Anode bake controls required on all prebake plants.

7.4 REFERENCES FOR SECTION 7

1. Memorandum from B. A. Varner to G. B. Crane. Estimation of Secondary Removal Efficiencies for Two Side-Worked Prebake Plants Adding Primary Control of Existing Secondary Control. Emission Standards and Engineering Division, OAQPS, Environmental Protection Agency. June 2, 1975.

2. Development Document for Effluent Limitations Guidelines and New Source Performance Standards for the Primary Aluminum Smelting Subcategory of the Nonferrous Metals Manufacturing Point Source Category. Effluent Guidelines Division, Office of Air and Water Programs, Environmental Protection Agency, Washington, D. C. Report Number EPA-440/1-74-019-d. March 1974. p. 110.

3. Air Pollution Control in the Primary Aluminum Industry. Singmaster and Breyer, New York, N.Y. Prepared for Office of Air Programs, Environmental Protection Agency, Research Triangle Park, N.C. under Contract Number CPA 70-21, July 23, 1973. p. 2-31.

4. Ibid. pp. 8-22, 8-27 thru 8-31.

5. Ibid, page 9-12.

6. Reference 2

7. Singmaster and Breyer op. cit. p. 9-10.

8. Chemical Marketing Reporter, January 2, 1978.

9. Minerals Yearbook, Volume I, 1973 United States Department of the Interior, Bureau of Mines, pp. 137, 155.

10. Singmaster and Breyer op. cit. p. 8-25.

8. RATIONALE OF STATE EMISSION GUIDELINES FOR EXISTING PRIMARY ALUMINUM PLANTS

8.1 INTRODUCTION

The recommended State fluoride emission guidelines in Section 8.3 are not expressed in terms of emission limitations, but are presented as recommended control technologies that will achieve certain average fluoride control efficiencies when applied as new retrofits to existing plants. The relative performances of the recommended controls are calculated from known cell fluoride evolution rates.

The data base underlying the State guidelines has been derived from State and industry test methods that often differ from EPA methods of emission measurement. Therefore, significant differences among the accuracy of these methods is possible. Because of the varying design of existing roof monitors, the use of source test method 14 may be precluded. The different roof monitor configurations may also prohibit the determination of the relationship between the emission test method used and Method 14.

State regulations are now in force that limit fluoride emissions from existing primary aluminum plants. The terms of the regulations and their compliance test requirements tend to differ among States and from

the Federal standards of performance for new primary aluminum plants. The guidelines are therefore structured to give the State maximum flexibility to utilize existing emission control and source sampling and analytical methods, and to avoid the requirement for unnecessary modifications of roof monitor sampling systems.

Good operation and good maintenance of potrooms is essential to good control, and the States should take steps to insure such objectives in their plans for implementing the guidelines.

- All hood covers should be in good repair and properly positioned over the pots. The amount of time hood covers are removed during pot working operations should be minimized.
- Some hooding systems are equipped with a dual low and high hood exhaust rate. This should be conscientiously used whenever hood covers are removed and returned to the normal exhaust rate once the hood covers are replaced.
- Particulate emissions (with any contained fluoride) can be significantly increased unless care is maintained in the design and operation of alumina cell charging and hopper loading facilities.
- A fuming pot often indicates a sick cell or clogged hooding ductwork. Either case represents poor potroom operation and should not be allowed to continue.
- Some tapping crucibles are equipped with hoses which return aspirator air under the hood. The hoses should be in good repair and the air return system should function properly.

8.2 Fluoride Emission Control Equipment and Costs (September 1977)

Table 8-1 gives some typical costs for certain model operations pertaining to fluoride control at existing aluminum plants. Conservative values for capture and removal efficiencies are also included as percents. The given cost values are taken from Tables 7-4 and 7-7 and represent only three of the several plant construction operations that may take place in any real situation. To illustrate the use of such modules refer to plant 26 in Table 7-9.

Table 8-2. The Use of Capital Cost Modules

Fluoride Emission Control Module	Capital Cost $/Annual ton Al
Install lime treatment of cryolite bleed stream	$2.43
Improve hooding	18.54
Install wet ESP	243.09
Remove spray tower	6.10
Install lime treatment for additional cryolite bleed stream	2.43
Install spray screen	97.36
Install waste water lime treatment	15.90
	$385.85

As shown, the final cost involved in any selected degree of control simply involves a determination of the construction scope of work (new equipment, deletions, etc.) followed by addition of the respective module costs. The seven cost modules shown for plant 26 add up to a total capital cost of $386 per annual ton of aluminum produced. The annualized costs could be derived in an analogous manner.

Table 8-1. CONTROL EQUIPMENT AND COSTS (September 1977)

Fluoride Emission Control Module	Cost		Efficiency, Percent
	Capital $/annual ton	Annualized $/ton	
Improve Hooding			
CWPB	18.54	4.64	95
SWPB	18.54	4.64	80
HSS	18.54	4.64	90
Install Primary Removal			
CWPB	75.39	3.16	98.5
SWPB	75.39	3.16	98.5
HSS	243.09	61.93	98.5
Install Secondary Removal			
VSS	97.36	31.71	75
CWPB	69.54	22.84	75
SWPB	69.54	22.84	75
HSS	97.36	31.71	75

The cost modules are estimates and may be used when actual engineering cost estimates or retrofit costs are not available. They also allow cost comparisons among degrees of control at the same plant or of costs among different plants. Some actual retrofit costs are given in Table 6-33.

8.3 RECOMMENDED STATE GUIDELINES AND COLLECTION AND REMOVAL EFFICIENCIES OF CONTROL EQUIPMENT FOR FLUORIDE EMISSIONS

The recommended State guidelines have been developed as described in Section 8.3.1 and are summarized in Table 8-3. The table may be explained in the following manner: Column 1 shows each of the four cell types. Column 2 gives the recommended average primary collection efficiencies (hooding) and Column 3 the primary removal efficiencies that EPA believes are readily achievable with new retrofits. An achievable secondary removal efficiency is also presented in Column 4. Column 5 shows the recommended technology for control of total fluoride emissions. Included is an indication of the status of primary control on a national basis and the conditions under which better primary control should be installed or secondary control added.

The fluoride emission ranges corresponding to the State guidelines are presented in Table 8.4. The recommended minimum fluoride collection and removal efficiencies have been used in equation 7.1 to estimate average fluoride emissions after the various controls are applied. Two cases are worked out for each of the four cell types: these cases correspond to the smallest and greatest evolution rates shown for each cell type in Table 7.2, and these extreme evolution rates are displayed in Column 6 of Table 8.4. The calculated cell average emissions corresponding to the evolution rates are arranged in the last column to show the range of emissions caused by the variations in cell fluoride evolution at the various plants from which EPA received cell evolution data.

The guideline primary collection efficiencies of Column 2,

Table 8-3. STATE GUIDELINES FOR CONTROL OF FLUORIDE EMISSIONS FROM EXISTING PRIMARY ALUMINUM PLANTS

Cell Type	Recommended Efficiencies for Proposed Retrofits			Guideline Recommendations
	Primary Collection	Primary Removal	Secondary Removal	
VSS	80	98.5	75 (a)	All plants now have best achievable hooding and primary removal. Install secondary control, but only if justified depending on severity of fluoride problem.
SWPB	80	98.5	75 (a)	Install best achievable hooding and primary removal equipment. Install secondary control wherever justified, depending on the severity of the fluoride problem.
HSS	90 (a)	98.5		All plants but #26 now have the best achievable primary collection efficiency. Plant #26 should install best primary control if needed. Secondary control does not appear to be justified, in most locations.
CWPB	95 (a)	98.5		Best control is best hooding and primary removal equipment. Install where needed. Secondary control does not appear to be justified, in most locations.

(a) See Section 8.3.1

Table 8-4. FLUORIDE EMISSION RANGES CORRESPONDING TO STATE GUIDELINES FOR EXISTING PRIMARY ALUMINUM PLANTS

Cell Type	Recommended Efficiencies for Proposed Retrofits			Guideline Recommendations	Assumed Average Fluoride Cell Evolution-lb/ton Al	Average Fluoride Emission range, lb F/ton Al
	Primary Collection	Primary Removal	Secondary Removal			Control
VSS	80	98.5	75	All plants now have best achievable hooding and primary removal. Install secondary control, but only if justified, depending on severity of fluoride problem.	30 - 54	Primary 6.4* - 11.4 Secondary 1.9** - 3.4
SWPB	80	98.5	75	Install best available hooding and primary revmoval equipment. Install secondary control wherever justified, depending on the severity of the fluoride problem.	37 - 53	Primary 7.8 - 11.2 Secondary 2.3 - 3.3
HSS	90 (a)	98.5		Install best primary control if needed. All plants but #26 now have best achievable primary collection efficiency. Secondary control does not appear to be justified, in most locations.	28 - 45	Primary 3.2 - 5.1 Secondary 1.1 - 1.7
CWPB	95 (a)	98.5		Best control is best hooding and primary removal equipment. Install where needed. Secondary control does not appear to be justified, in most locations.	26 - 66	Primary 1.7 - 4.2 Secondary --- ---

* 30 [1 - .80 x .985] = 6.4 lbs F/ton Al

** 30 [1 - .80 x .985 - (1 - .80) x .75] = 1.9 lbs F/ton Al

(a) See Section 8.3.1

Table 8.3 are based on methods of calculation given in detail in Section 6.1.2. These calculated efficiencies agree well with those that were directly measured or otherwise arrived at by the owners of similar plants. Hooding efficiency depends on several factors such as cell design, age, operation and maintenance, and hood exhaust rate; and Table 7.3 shows cases where claimed efficiencies vary from those of the guidelines. There are various reasons for the cell hooding efficiencies for given cell types. The VSS cell has exposed molten electrolyte bath area around the hood skirt that varies with cell design. This factor limits cell collection efficiency and also causes fluoride escape according to the amount of cell bath area exposed. Hood efficiency also depends on the number of times a cell hood has to be opened to produce a ton of aluminum; fluoride escapes during openings. The HSS cell varies from 16 to 50 openings per ton of aluminum produced, depending on cell design.

The plants considered in Table 8-4 are hypothetical plants, and therefore, costs have not been derived for these specific cases. Instead, the cost of Table 7-9 for analogous cases will be discussed in the guidelines. The costs derived in Table 7-9 are applied to actual plants, but are model plant costs. Considering their uncertain accuracy applied to real situations, they will be sufficient to illustrate the cost effectiveness of State guidelines.

8.3.1 State Fluoride Emission Guidelines

The following State emission guidelines for control of total fluoride emissions from existing primary aluminum plants are restated from Table 8.3. The range of average fluoride emissions, according to the last column of Table 8-4, is given after the guideline for each cell type.

As explained above, the range of the average emissions reflects the range of known cell evolutions.

VSS CELLS

The primary collection efficiencies for all existing plants are only about 80 percent, but are essentially the best achievable for this type of cell. The primary removal efficiencies for all existing plant VSS cells are high, in the range of 98.4 to 99.9 percent. Therefore, secondary controls should be installed only if justified by the severity of the fluoride problem. The expected emission ranges are as follows:

Average emissions from primary control (calculated):

= 6.4 to 11.4 lb F/ton Al

Average emissions from primary plus secondary control (calculated):

= 1.9 to 3.4 lb F/ton Al

Incremental cost effectiveness for secondary control is in the approximate range of $4 to $8 per pound of fluoride removed, as indicated in Table 7-9. Essentially, no expenditures are required for primary control. The cases in Table 7-9 were all chosen to represent--for each cell type--the least and the greatest emission rates after installation of best primary and secondary control.

SWPB CELLS

SWPB cells must be worked along both sides with the side covers removed, and for longer times than other cells (Tables 6.2-6.6). Therefore, there is an inherent limitation to the primary collection efficiency of these cells.

The best achievable hooding for this type of cell has about 80%

collection efficiency. In addition to installing the best available primary hooding and removal equipment, secondary controls should be installed, if justified, depending on the severity of the fluoride problems. The emission ranges are as follows:

Average emissions from primary control (Calculated):

= 7.8 to 11.2 lb F/ton Al

Average emissions from primary plus secondary control (calculated):

= 2.3 to 3.3 lb F/ton Al

The cost effectiveness of secondary control is $3.79 per pound of fluoride removed for plant #24. It will be somewhat higher for other SWPB plants because they are initially better controlled.

HSS CELLS

All plants except plant #26 presently have essentially the best achievable primary collection efficiencies of about 90 percent. If the primary removal systems for HSS cells are upgraded to 98.5 percent, this should be suitable for best retrofit control technology. The emission ranges are as follows:

If hooding were added to, or replaced on, an existing HSS plant, EPA believes that modern technology can achieve 90% collection efficiency, in almost all cases. A plant may exist where it is difficult or economically impractical to install best hooding.

If a modern primary removal system were added to, or replaced on, an existing HSS plant, EPA believes that modern technology can achieve 98.5% removal efficiency. A modern spray tower added ahead of existing wet ESPs can raise primary removal efficiency to 98.5. This spray tower addition may be economically impractical if free space does not exist within a reasonable distance of fluoride source and wet ESP.

If an HSS plant has existing primary collection efficiency of 85-90% and primary removal efficiencies of 95 - 98.5%, control agencies should closely study costs and benefits, before requiring retrofits. In the above efficiency ranges, retrofit does not seem justified unless there is a local fluoride problem.

Average emissions from primary control (calculated):

= 3.2 to 5.1 lb F/ton Al

The lowest incremental cost effectiveness to improve the hooding is about $0.35 per pound of fluoride, and to add best primary removal is about $4 per pound of fluoride removed.

Secondary control does not seem justified at an incremental cost effectiveness ranging from $12 to $30 per pound of fluoride removed, depending on the plant. No HSS plants now have secondary control.

CWPB CELLS

Retrofit primary hooding can be added to achieve a collection efficiency of 95 percent for CWPB cells, while primary fluoride removal systems of 98.5 percent are common. A primary collection and removal system should therefore suffice for best retrofit control technology.

If hooding were added to, or replaced on, an existing CWPB plant, EPA believes that modern technology can achieve 95% collection efficiency, in almost all cases. A plant may exist where it is difficult or economically impractical to install best hooding.

If a modern primary removal system were added to, or replaced on, an existing CWPB plant, EPA believes that modern technology can achieve 98.5% removal efficiency.

If a CWPB plant has existing primary collection efficiency of 90-95% and primary removal efficiencies of 95 - 98.5%, control agencies

should closely study costs and benefits, before requiring retrofits. In the above efficiency ranges, retrofit does not seem justified unless there is a local fluoride problem.

The emission ranges are as follows:

Average emissions from primary control (calculated)

= 1.7 - 4.2 lbs F/ton Al

Secondary control does not seem justified at an incremental cost effectiveness of $10 to $40 per pound of fluoride removed, depending on the plant. No CWPB plants now have secondary control.

Secondary Removal

Some secondary removal units (scrubbers) may not be able to achieve 75 percent efficiency (See Section 6.2.3). Control officials should carefully study costs, impacts, and energy consumption before requiring either replacements or initial retrofits.

8.3.2 Compliance Time

Section 6.4 has discussed at some length the design, construction, and startup time requirements for retrofit air emission controls on existing primary aluminum plants. The historical variation of delivery times for supplies and equipment has been shown, and it was pointed out that these deliveries are often completely outside the control of either customer or control official.

Because of the nature of plant construction and emission source testing, compliance times for either activity tend toward a case-by-case basis for the primary aluminum industry. However, most air pollution retrofits can be designed and installed in not more than 3 years. States should add to this time any compliance demonstration time in excess of that indicated in Table 6-37. In all cases, States should require proof for the time requirements claimed for each milestone.

8.4 EMISSION TESTING

EPA Reference Methods 13(a), 13(b), and 14 were developed for use in the determination of total fluoride emissions from primary aluminum plants, and are adapted for use with new sources. However, it is recognized that installation of Method 14 ductwork on existing sources will result in variable costs, depending on the plant. In some existing plants, unreasonable costs may be incurred. For these reasons, EPA does not specify compliance testing for existing plants: such testing is to be decided and specified by each State on a case-by-case basis, taking into account economic feasibility.

9. ENVIRONMENTAL ASSESSMENT

An environmental assessment for emission guidelines for existing plants is unique in that the exact number of affected facilities is or can be known. Further, for the primary aluminum industry, individual capacities, existing or proposed control schemes, and fluoride emissions, are known for each plant. From this degree of knowledge and specificity, the national environmental impacts of alternative emission control systems or levels were evaluated by simply summing individual plant impacts for the entire population of United States primary aluminum plants.

A vast number of fluoride emissions control scheme permutations exist within the primary aluminum industry. There are four basic aluminum reduction cell types, two fundamental levels of control--primary and secondary--and many possible primary control schemes. For this reason, an environmental impact assessment of every control scheme permutation was not attempted. Instead, national environmental imapcts--the sums of 31 individual plant impacts--of a few fundamental levels of fluoride control were analyzed to illustrate the methods that are applicable to all such analyses. The levels of fluoride emissions control considered were:

1. Initial - The level of fluoride emissions control which would

be expected in the absence of 111(d) State guidelines emissions (Table 7-2) limitations for existing plants. At this level, all plants are expected to install water treatment systems which comply with 1983 effluent guidelines for all existing or proposed fluoride emissions control schemes.

2. Best Hooding with Best Primary Control - Each existing plant is upgraded to the level of best cell hooding and primary control for that particular plant.

3. Best Cell Hooding with Best Primary and Secondary Control - Each existing plant is further upgraded to the level of best cell hooding and best primary and secondary control for that particular plant.

National air pollution, water pollution, energy, and solid waste disposal impacts were estimated for each of these alternative levels of fluoride emissions control. Future experience will probably show that the national degree of control achieved by the States will lie somewhere within the boundaries of levels 2 and 3, above. However, step 2 is not meant to be the lowest national level of emission control improvement, even though step 3 does represent the highest possible improvement. Levels 2 and 3 may be thought of as examples of two national levels of fluoride emission control.

Although it was not possible to illustrate individual impacts for all fluoride control scheme permutations, examples of control schemes with extreme impacts have been provided. For example, in the water pollution impact assessment, examples are given of plants with fluoride

emissions control schemes which both maximize and minimize water pollution. Thus, for each of the four major impact areas (air, water, energy, and solid waste), specific plant examples showing maximum and minimum impacts have been provided, along with national impact assessments for each of the three fundamental levels of fluoride emission control.

9.1 AIR POLLUTION ASSESSMENT

The air pollution assessment for emission guidelines progresses from a generalized evaluation of fluoride emissions impact to more specific impacts. The first three sections of the air pollution assessment discuss national fluoride emission impacts, extremes in source strengths, and fluoride dispersion calculations. The last two sections of the assessment discuss particulate emissions from aluminum reduction cells and anode bake plant emissions.

9.1.1 National Fluoride Emissions from Primary Aluminum Reduction Cells

National fluoride emissions from primary aluminum reduction cells have been calculated for all plants by methods indicated for plant 5A, etc., in Table 7-3. For each alternative level of fluoride emissions control, the products of individual plant capacities and average emissions were added to yield national fluoride emissions for each of the four reduction cell types. The results of these calculations, along with average fluoride emissions by cell type and weighted by capacity, are presented in Tables 9-1 and 9-2.

The dramatic effects of emission control are illustrated by the mass fluoride emissions figures in Table 9-1. Implementation of the lowest illustrated degree of control would result in a 50 percent reduction in mass emissions of fluorides from primary aluminum reduction

Table 9-1. NATIONAL TOTAL FLUORIDE EMISSIONS FROM PRIMARY ALUMINUM REDUCTION CELLS

Control Level	National Fluoride Emissions by Cell Type (Tons F/Yr)				
	VSS[a]	HSS[a]	CWPB[a]	SWPB[a]	Total
Initial	1,700	3,000	8,500	4,800	18,000
Best Hooding and Primary Control	1,700	2,100	3,700	1,500	9,000
Best Primary and Secondary Control	660	890	1,600	810	4,000

[a]VSS - vertical stud Soderberg; HSS - horizontal stud Soderberg; CWPB - center-worked prebake; SWPB - side-worked prebake.

TABLE 9-2. AVERAGE FLUORIDE EMISSIONS FOR PRIMARY ALUMINUM REDUCTION CELLS

Control Level	Average Fluoride Emissions (Lb F/Ton Al)			
	VSS[a]	HSS[a]	CWPB[a]	SWPB[a]
Initial	5.2	5.7	6.3	13
Best Hooding and Primary Control	5.2	4.0	2.7	4.0
Best Primary and Secondary Control	2.1	1.7	1.2	2.2

[a]VSS - vertical stud Soderberg; HSS - horizontal stud Soderberg; CWPB - center-worked prebake; SWPB - side-worked prebake

cells. National fluoride emissions from this source would thus be reduced from 18,000 tons/yr to 9,000 tons/yr. Although the average fluoride emissions for all cell types under this degree of control are similar (Table 9-2), the fundamental level of control varies somewhat among plants. Secondary control exists at plants 18, 19, and 20.

9.1.2 Fluoride Emission Control Systems with Extreme Air Pollution Impacts

To illustrate the extremes in effectiveness of fluoride emissions control systems, the overall environmental impact for two individual plants is presented in Table 9-3. Plant 6B represents the most effective fluoride emissions control system applied to the most controllable cell type--center-worked prebake. One of the least effective emission control systems is typified by Plant 26. Table 9-3 compares the overall environmental impacts of the two extremes in fluoride emissions control effectiveness.

The range of control scheme effectiveness is best indicated by the difference in average fluoride air emissions; 1 lb F/ton Al for Plant 6B, and 34.5 lb F/ton Al for Plant 26. Although the more effective emission control scheme reduces fluoride emissions by more than a factor of thirty over the poor control scheme, only twice as much energy is required per ton of aluminum produced. More solid waste is generated by the poor control scheme compared to the effective control scheme, mainly because of the higher percentage of mass removed in a wet primary versus a wet secondary control system. Effluent emissions per ton of aluminum produced must be the same for both examples, due to the applicability of 1983 Effluent Guidelines Standards.

Table 9-3. FLUORIDE EMISSION CONTROL SYSTEMS WITH EXTREME AIR POLLUTION IMPACTS

Plant Code	6B	26
Cell Type	CWPB	HSS
Capacity (Tons Al/Yr)	115,000	51,000
Primary Control Scheme	Fluidized bed dry scrubber	Spray tower
Secondary Control Scheme	Spray screen scrubber	None
Air Fluoride Emissions (Tons F/yr)	57.5	880
Average Fluoride Air Emissions (Lb F/ton Al)	1	34.5
Effluent Emissions		
1. Fluoride: (Tons F/yr)	5.75	2.55
2. Total Suspended Solids (Tons/Yr)	11.5	5.1
Fluoride Control Energy Requirements (Mwh/yr)	58,800	13,200
Average Fluoride Control Energy Requirements (Kwh/ton Al)	511	259
Solid Waste Generated from Control of Fluoride Emissions (Tons/yr)	2300	3,930
Average Solid Waste Generation from Control of Fluoride Emissions (Lb/ton Al)	40	154

9.1.3 Fluoride Dispersion[1]

Dispersion estimates were prepared comparing ground level concentrations before and after the retrofit of emission controls described under cases A, B, and C in Section 6.3. The purpose of those estimates is to demonstrate the improvement in air quality that may result from the retrofit. The estimates pertain to specific primary aluminum plants located in the northwestern United States.

Receptors

As stated in Section 2.3, the most sensitive receptors are dairy cattle grazing on forage that has a fluoride accumulation of more than 40 ppm. Such an accumulation can be caused by a 30-day average ambient air concentration of gaseous fluoride of about 0.5 micrograms per cubic meter (g/m^3). Hence, dispersion calculations should be concerned with the 30-day average concentration out to distances where the concentration is normally diluted to 0.5 mg/m^3.

Source Characteristics

Emissions (Table 9-4) and ambient air concentrations (Table 9-5) are expressed in terms of total fluoride, because emission breakdowns into gaseous and fine particulate forms were not available. Both forms are harmful and EPA New Source Performance Standards are in terms of total fluoride.

Table 9-4 presents the before and after retrofit fluoride emissions at the three plants studied. The fluoride emission rates are annual averages, and are treated as constant on a year-round basis. The following paragraphs describe the basic emission characteristics at each facility.

Table 9-4. FLUORIDE EMISSIONS AT PLANTS A, B, AND C

Plant	Source	Fluoride Emissions (g/s) Before Retrofit	After Retrofit
A	Potrooms	2.08	1.84
"	Scrubbers	4.3	----
"	Fume Control Units	----	0.92
"	500-foot Stack	4.3	----
B	Potrooms	16.3	8.6 (including ESPs)
C	Potrooms	34.3	3.4
"	Fume Control Units	----	1.5

At Plant A, potroom, scrubber, and fume control unit emissions are from stacks and rooftop monitors about 55 feet above grade; effluent temperatures are slightly above ambient temperatures. The emissions from the 500-foot stack are at a temperature of 90°F, with a flow rate of 700,000 CFM.

At Plant B, all fluoride emissions before retrofit and about 90 percent of the emissions after retrofit are from the potroom areas. Potroom area emissions are from roof monitors and from spray towers near roof-top level. All such emission are at or near ambient temperature and should be characterized by negligible plume rise. The remaining 10

percent of emissions after retrofit are from nearby ESPs, also near roof-top level. The proportion of emissions from the ESPs is small enough to permit the simplifying assumption that all emissions are from the potroom areas.

At Plant C, all fluoride emissions before retrofit and about 70 percent of emissions after retrofit are from the potroom roof monitors. Those roof monitor effluents, as at the other plants, are near ambient temperature and are characterized by negligible plume rise. The remainder of emissions after retrofit are from fume control units near roof-top level at a temperature between 150°C and 200°F.

Generalized illustrations of roof monitor and stack emissions are contained in Figures 5-1 to 5-4, Section 5.1. In Section 6.3, retrofit layouts are given for Plant A in Figures 6-13 and 6-14, for Plant B in Figures 6-15 and 6-16, and for Plant C in Figures 6-19 and 6-20.

Dispersion Estimates

For this analysis, a computerized dispersion model (CRS-1) developed by the Meteorology Laboratory, NERC, was utilized. The CRS-1 is a Gaussian point source dispersion model for use in flat terrain. The model generates, for any given year, maximum 1-hour, 24-hour, and annual ground level concentrations. Maximum concentrations for other averaging times (e.g., a 30-day averaging time in this case) can be obtained through special analysis of the model output. This model was the predecessor of the finalized CRSTER model.[2] The latter model includes terrain correction in addition to all the features of CRS-1, and should be used in all future evaluations.

Maximum 30-day fluoride concentrations were estimated for distances of 0.75, 2, 10, 20, and 40 kilometers from the center of each facility. The 0.75 kilometer distance is assumed to be approximately that of the plant boundary in each case. All three facilities were assumed to be isolated from other sources of fluorides.

The CRS-1 is designed to accept one year of hourly atmospheric stability-wind data as input. For these analyses, the meteorological input to the model consisted of one year of 3-hourly data, specially preprocessed to generate estimated hourly values. The data were obtained from a National Weather Service Station characterized by generally restrictive dispersion conditions and reasonably representative of conditions at the facilities studied. Probably the most important characteristic of the dispersion conditions, as they pertain to this analysis, is the high frequency of wind from a few directions, resulting in higher 30-day concentrations than would occur with less restricted air flow. Possible impaction of the effluent plumes on elevated terrain was not considered.

The characteristics of the facilities, discussed earlier, required modifications to the CRS-1 model itself. The facilities have certain area-source characteristics and are affected by aerodynamic downwash of plant effluents much of the time. Except for the 500-foot stack in the before-retrofit case at Plant A, all fluoride emissions at the facilities were of a low-level, area source configuration. The height and areal extent of low-level emissions were similar at all three facilities. For modeling purposes, low-level fluoride emission at all three facilities were approximated by a uniform circular area source 500 meters across

and 20 meters above grade. The area source was handled by approximating low-level emissions as a "virtual point source" upwind of the facility for each of the hourly CRS-1 computations.

Aerodynamic downwash of plant effluents was simulated by assuming an effective stack height of 10 meters (one-half the average height of low-level emissions) for wind speeds greater than or equal to 2 m/s. For wind speeds less than 2 m/s, downwash was assumed to have a lesser influence, and an effective stack height of 20 meters was assumed.

The 500-foot stack (in the before-retrofit case at Plant A) was modeled through a separate CRS-1 analysis, which included a plume rise estimate. Ground level ambient fluoride concentrations were superimposed on concentrations due to low-level emissions to determine total impact of Plant A before retrofit.

The highest 30-day average ground level ambient fluoride concentrations that were estimated for the year of data are presented in Table 9-5 for several downwind distances. The given concentrations are the maximums for each of the specified distances. Note that best adequately demonstrated control technology does not preclude undesirably high fluoride concentrations, although the improvements in air quality are still significant. Ambient fluoride concentrations may still exceed 0.5 $\mu g/m^3$ up to 14, 24, and 20 Km downwind of plants A, B, and C respectively after retrofit. Close to the source (e.g., at the plant boundary), where the greatest impact on air quality occurs, the ambient ground level fluoride concentrations resulting from controlled emissions can be reduced further by directing most of the emissions up stacks tall enough to avoid aerodynamic downwash of the effluent. Usually, a stack

Table 9-5. MAXIMUM 30-DAY AVERAGE AMBIENT FLUORIDE CONCENTRATIONS IN THE VICINITY OF PLANTS A, B, AND C

Plant	Downwind Distance (km)	Fluoride Concentration ($\mu g/m^3$)	
		Before Retrofit	After Retrofit
A	0.75 (plant boundary)	41	18
"	2	13	6
"	10	2	0.8
"	14[a]	-	0.5
"	20	0.6	0.3
"	40	0.2	0.1
B	0.75 (plant boundary)	104	55
"	2	34	18
"	10	5	3
"	20	2	0.7
"	24[a]	-	0.5
"	40	0.5	0.2
C	0.75 (plant boundary)	219	31
"	2	72	11
"	10	10	1
"	20	3	0.5
"	40	1	0.1

[a]These values were interpolated.

height about 2-1/2 times the height of any nearby buildings, or other obstacles to wind flow, is sufficient to avoid such downwash problems. With increasing distance from the source, the benefits of a taller stack diminish. To significantly reduce ground level fluoride concentrations beyond a few kilometers from the source, there is no choice but to further reduce emissions.

9.1.4 Particulate Emissions from Aluminum Reduction Cells

Particulate emissions will be significantly reduced by emission controls. Reference (3) gives the particulate removal efficiencies for various fluoride emissions control equipment. These efficiencies were used with Tables 7-2 and 7-3 to calculate national particulate emissions and average emissions for all plants for the three alternative levels of fluoride emissions control as illustrated by Table 7-3. The results of these particulate emissions calcualations are presented in Tables 9-6 and 9-7. The particulate fluoride emissions are reduced by about 50 percent.

As shown in Table 9-6, national particulate emissions from primary aluminum reduction cells will be reduced from 44,000 to 25,000 tons/yr, or to 21,000 tons/yr at the lowest level technically feasible. The effectiveness of good controls in controlling particulate emissions is not coincidental; a substantial percentage of the total fluorides emitted from primary aluminum reduction cells is in particulate form. Thus, in order to effectively control total fluoride emissions, total particulate emissions must also be well controlled.

9.1.5 National Particulate and Fluoride Emissions from Anode Bake Plants

Fluoride and particulate emissions for anode bake plants are

Table 9-6. NATIONAL PARTICULATE EMISSIONS FROM PRIMARY ALUMINUM REDUCTION CELLS

Control Level	National Particulate Emissions by Cell Type (Tons/Yr)				
	VSS[a]	HSS[a]	CWPB[a]	SWPB[a]	Total
Initial	5,200	8,700	18,000	12,000	44,000
Best Hooding and Primary Control	5,200	6,400	8,300	5,400	25,000
Best Primary and Secondary Control	4,500	5,200	6,600	5,000	21,000

[a]VSS - vertical stud Soderberg; HSS - horizontal stud Soderberg; CWPB - center-worked prebake; SWPB - side-worked prebake

Table 9-7. AVERAGE PARTICULATE EMISSIONS FOR PRIMARY ALUMINUM REDUCTION CELLS

Control Level	Average Particulate Emissions by Cell Type (Lb/Ton Al)			
	VSS[a]	HSS[a]	CWPB[a]	SWPB[a]
Initial	16	17	13	32
Best Hooding and Primary Control	16	12	6.1	15
Best Primary and Secondary Control	14	10	4.9	13

[a]VSS - vertical stud Soderberg; HSS - horizontal stud Soderberg; CWPB - center-worked prebake; SWPB - side-worked prebake

listed in Table 9-8, assuming that all anode bake plants retrofit with spray tower and wet electrostatic precipitator (WESP) control. Accordingly, before and after retrofit emissions are given.

Table 9-8. ANODE BAKE PLANT AIR POLLUTANT EMISSIONS

Air Pollutant	Emissions			
	Before Retrofit[4]		After Retrofit	
	Average (lb/ton Al)	National (ton/yr)	Average (lb/ton Al)	National (ton/yr)
Particulate	5	8600	0.5	860
Fluoride	0.86	1500	0.05	86

Table 9-8 shows that fluoride and particulate mass emissions from anode bake plants can be reduced by 94 and 90 percent respectively through application of the indicated control scheme. This degree of control will reduce fluoride emissions from anode bake plants by 1,400 tons/yr and decrease national particulate emissions by 7,700 tons/yr.

9.2 WATER POLLUTION IMPACT

As stated in Section 7.2, all plants with either wet primary or secondary control were expected to meet 1983 effluent limitations guidelines for primary aluminum plants. The only two factors which could influence mass effluent emissions were capacity and the percentage

of capacity with wet controls. In the following sections, 1983 effluent guidelines are given, effluent emissions control schemes are outlined, and national effluent emissions have been estimated for the alternative levels of fluoride air emissions control. A more detailed discussion of water pollution control can be obtained from Reference (5).

9.2.1. Effluent Limitations Guidelines for Primary Aluminum Plants[6]

Table 9-9 lists 1977 and 1983 effluent limitations guidelines for existing primary aluminum plants. As shown by the table, 1983 standards require fluoride effluent emissions to be reduced by a factor of twenty over the 1977 standards. 1983 effluent guidelines will affect all existing primary aluminum plants by the date indicated; consequently, they have been applied in calculating effluent emissions for all alternative levels of fluoride air emissions control.

9.2.2 Water Pollution Control Technology Required to Meet 1983 Effluent Guidelines Standards

The two basic water treatment schemes which will be practiced by the primary aluminum industry are scrubber water recycle with lime precipitation of a bleed stream, and cryolite recovery with lime treatment of the bleed stream. The two methods differ only in that alumina and fluoride are recovered from the aqueous stream when cryolite recovery is practiced. Success of both these methods require lime treatment of a low volume, high concentration bleed stream; the bulk of the scrubber water is recycled. This water pollution control approach allows fluoride effluent emissions to be adequately controlled at a feasible cost.

9.2.3 National Effluent Emissions from Primary Aluminum Reduction Plants

National effluent emissions from primary aluminum plants have been estimated by applying 1983 effluent guidelines standards to the individual

Table 9-9. EFFLUENT LIMITATIONS FOR PRIMARY ALUMINUM PLANTS

To Be Achieved by July 1, 1977	Effluent Characteristic	Effluent Limitations: Maximum for any 1 Day		Effluent Limitations: Average of Daily Values for 30 Consecutive Days Shall Not Exceed	
		Metric Units (Kg/1000 Kg Al)	English Units (Lb/Ton Al)	Metric Units (Kg/1000 Kg Al)	English Units (Lb/Ton Al)
	Fluoride	2.0	4.0	1.0	2.0
	Total Suspended Solids	3.0	6.0	1.5	3.0
	pH	Within the range of 6.0 to 9.0.			

To Be Achieved by July 1, 1983		Metric Units (Kg/1000 Kg Al)	English Units (Lb/Ton Al)	Metric Units (Kg/1000 Kg Al)	English Units (Lb/Ton Al)
	Fluoride	0.1	0.2	.05	0.1
	Total Suspended Solids	0.2	0.4	0.1	0.2
	pH	Within the range of 6.0 to 9.0.			

plant control options contained in Table 7-2, illustrated in Table 7-3, and employed in Section 9. In estimating national effluent emissions, all aluminum plants with wet controls at a particular fundamental level of fluoride control were assumed to discharge aqueous wastes at the maximum level allowed by 1983 standards. Thus, by a simple summation procedure, similar to the one used to calculate national fluoride air emissions, national effluent emissions at alternative levels of control were derived.

Table 9-10 gives national effluent emissions by cell type for the two pollutants regulated under the 1983 standards. Average effluent emissions by cell type--equal to national cell effluent discharges divided by total cell capacity--are contained in Table 9-11. As mentioned in the introduction to this section, the applicability of 1983 effluent limitations guidelines to the alternative levels of fluoride emissions control allows the percent of capacity with wet controls to be determined by inspection of the table of average effluent emissions. The ratio of average emissions to 1983 effluent standards for a particular level of control represents the fraction of capacity with wet controls at that level. For example, if a particular cell type had average fluoride effluent discharges of 0.050 lb/ton Al, then the degree of wet control would be 0.050/0.100 or 50 percent of capacity. Table 9-12 presents the percent of capacity employing wet controls for the various cell types and levels of air pollution control.

Tables 9-10 and 9-12 show that the example controls will not significantly alter effluent emissions compared to the initial level of air pollution control. Returning to the impact analysis procedure,

Table 9-10. NATIONAL EFFLUENT EMISSIONS FROM PRIMARY ALUMINUM PLANTS

Air Pollution Control Level	National Effluent Emissions by Cell Type (Tons/Yr)				
	VSS[a]	HSS[a]	CWPB[a]	SWPB[a]	Total
Initial: Fluoride	23	35	21	28	110
Total Suspended Solids	45	70	42	56	210
Best Hooding and Primary Control:					
Fluoride	23	35	0	27	85
Total Suspended Solids	45	70	0	55	170
Best Primary and Secondary Control:					
Fluoride	32	52	135	37	260
Total Suspended Solids	64	104	270	74	510

[a]VSS - vertical stud Soderberg; HSS - horizontal stud Soderberg; CWPB - center-worked prebake; SWPB - side-worked prebake.

Table 9-11. AVERAGE EFFLUENT EMISSIONS FROM PRIMARY ALUMINUM REDUCTION PLANTS

Air Pollution Control Levels	Average Effluent Emissions (Lb/Ton Al)			
	VSS[a]	HSS[a]	CWPB[a]	SWPB[a]
Initial:				
Fluoride	0.07	0.07	0.02	0.08
Total Suspended Solids	0.14	0.13	0.03	0.15
Best Hooding and Primary Control:				
Fluoride	0.07	0.07	0	0.07
Total Suspended Solids	0.14	0.13	0	0.15
Best Primary and Secondary Control:				
Fluoride	0.10	0.10	0.10	0.10
Total Suspended Solids	0.20	0.20	0.20	0.20

[a]VSS - vertical stud Soderberg; HSS - horizontal stud Soderberg; CWPB - center-worked prebake; SWPB - side-worked prebake.

Table 9-12. EXTENT OF WET CONTROLS AT ALTERNATIVE LEVELS OF FLUORIDE AIR EMISSIONS CONTROL

Air Pollution Control Level	Percent of Cell Capacity with Wet Controls				
	VSS[a]	HSS[a]	CWPB[a]	SWPB[a]	Total
Initial	71	67	16	76	42
Best Hooding and Primary Control	71	67	0	74	33
Best Primary and Secondary Control	100	100	100	100	100

[a]VSS - vertical stud Soderberg; HSS - horizontal stud Soderberg; CWPB - center-worked prebake; SWPB - side-worked prebake.

this can be interpreted to mean that effluent emissions in the absence of emission guidelines would be comparable to effluent emissions with additional emission controls. Thus, installing better air pollution controls will not significantly increase water pollution.

9.2.4 Fluoride Air Emissions Control Schemes with Extreme Water Pollution Impacts

To illustrate fluoride air emissions control systems with extreme water pollution impacts, the overall environmental impact for two individual plants is presented. Plant 14B represents the air pollution control system with the most beneficial water pollution impact, primary dry scrubbing. A typical wet air pollution control system is illustrated by Plant 25B. It should be emphasized that the applicability of 1983 effluent guidelines standards makes the mass effluent emissions a function only of plant capacity for a plant with wet controls. As a result, all wet control sytems have been assumed to have average effluent emissions equal to the 1983 standards.

Table 9-13 shows the overall environmental desirability of primary dry scrubbing versus primary wet control. The CWPB plant generates no fluoride control-related solid waste, nor does it discharge any effluent emissions. Plant 25B generates 15,600 tons of solid waste resulting from fluorides control and discharges 10.1 tons of aqueous fluorides per year. Air fluoride emissions can also be controlled as--or more--effectively with primary dry scrubbing, versus wet control for most cell types. However, SWPB and VSS cells generally require secondary control to achieve an acceptable level of fluoride emissions, and dry scrubbing is not technically or economically feasible as a secondary

Table 9-13. FLUORIDE AIR EMISSIONS CONTROL SCHEMES WITH EXTREME WATER POLLUTION IMPACTS

Plant Code	14B	25B
Cell Type	CWPB	HSS
Capacity (Tons Al/yr)	206,000	202,000
Primary Control Scheme	Dry Scrubbing	Wet Electrostatic Precipitator
Secondary Control Scheme	None	None
Air Fluoride Emissions (Tons F/yr)	206	465
Average Fluoride Air Emissions (Lb F/ton Al)	2.0	4.6
Effluent Emissions 1. Fluoride: (Tons F/yr)	0	10.1
2. Total Suspended Solids: (Tons/yr)	0	20.2
Fluoride Control Energy Requirements (mwh/yr)	43,500	20,200
Average Fluoride Control Energy Requirements (kwh/ton Al)	211	100
Solid Waste Generated from Control of Fluoride Emissions (Tons/yr)	0	15,600
Average Solid Waste Generation from Control of Fluoride Emissions (Lb/ton Al)	0	154

control strategy. Because of the necessity of secondary control in some instances, the abandonment of all wet control schemes is precluded.

9.3 SOLID WASTE DISPOSAL IMPACT

All fluoride control related solid waste produced by the primary aluminum industry is a direct result of wet, fluoride air emissions control and the accompanying water treatment. Dry scrubbing techniques do not generate any solid wastes, because all captured solids are returned to the process. National and average solid waste generation from wet fluoride control by the primary aluminum industry has been estimated by applying the average solid waste generation figures in Table 9-14 to the individual plant control options listed in Tables 7-2 and 7-3, or derived as for plant 5A, etc. As with other impact evaluations, a summation procedure was used to obtain national impacts. Solid waste generation quantities listed with an asterisk in Table 9-14 were estimated from probable effluent loadings based upon average fluoride generation. All other solid waste entries in the table were obtained from Reference (6).

9.3.1 National Solid Waste Generation Due to Fluoride Control by the Primary Aluminum Industry

Tables 9-15 and 9-16 present national and average solid waste generation caused by fluoride control in the primary aluminum industry. Emission limitations will have an effect upon national solid waste production similar to that for water pollution, namely: installation of best controls will not significantly increase the solid waste over the amount produced at the initial level of air pollution control. As shown in Table 9-15, the national generation of solid waste by the aluminum

Table 9-14. SOLID WASTE GENERATION FOR VARIOUS FLUORIDE EMISSIONS CONTROL SCHEMES[7]

Fluoride Emissions Control Scheme	Solid Waste Generation (Lb/Ton Al)
Primary Dry Scrubbing	0
Primary Wet Scrubbing with Cryolite Recovery	154
Secondary Wet Scrubbing with Cryolite Recovery	160
Primary Wet Scrubbing with Lime Treatment	120
Secondary Wet Scrubbing with Lime Treatment	40*
Primary Wet Electrostatic Precipitator (WESP) with Lime Treatment	150*
Primary WESP with Cryolite Recovery	154*

*These values were estimated from probable effluent loadings.

Table 9-15. NATIONAL SOLID WASTE GENERATION FROM FLUORIDE CONTROL BY THE PRIMARY ALUMINUM INDUSTRY

Air Pollution Control Level	National Solid Waste Generation Resulting from Fluoride Control (Tons/Yr)				
	VSS[a]	HSS[a]	CWPB[a]	SWPB[a]	Total
Initial	35,000	54,000	25,000	45,000	160,000
Best Hooding and Primary Control	35,000	54,000	0	44,000	130,000
Best Primary and Secondary Control	44,000	75,000	54,000	48,000	220,000

[a]VSS - vertical stud Soderberg; HSS - horizontal stud Soderberg; CWPB - center-worked prebake; SWPB - side-worked prebake

Table 9-16. AVERAGE SOLID WASTE GENERATION RESULTING FROM FLUORIDE CONTROL FOR THE PRIMARY ALUMINUM INDUSTRY

Air Pollution Control Level	Average Solid Waste Generation by Cell Type (Lb/Ton Al)			
	VSS[a]	HSS[a]	CWPB[a]	SWPB[a]
Initial	110	100	19	120
Best Hooding and Primary Control	110	100	0	120
Best Primary and Secondary Control	140	140	40	130

[a]VSS - vertical stud Soderberg; HSS - horizontal stud Soderberg
CWPB - center-worked prebake; SWPB - side-worked prebake

industry from fluoride control is equal to 160,000 tons per year at the initial, and 220,000 tons per year at the best, control levels of air pollution control. If all 31 plant sites installed best primary controls, a decrease of 30,000 tons per year of solid waste would result. If all sites installed secondary controls, there would be a solid waste increase of 60,000 tons per year; however, secondary control is often unnecessary and uneconomical, and only one or two plants may need to add this control. The decrease in solid waste by adding best primary control will overbalance any increase due to adding secondary control.

Average fluoride control solid waste generation is lowest for center-worked prebake cells at all levels of fluoride emissions control. Table 9-16 illustrates the large difference in average solid waste generation for CWPB cells as compared to the other three cell types. Soderbergs and side-worked prebake cells generate at least 100 pounds of sludge per ton of aluminum produced at all levels of air pollution control; CWPB cells produce from 0 - 40 pounds of sludge per ton of aluminum over the same range of control levels. This difference in solid waste generation can be attributed to the almost universal use of primary dry scrubbing in controlling fluoride emissions from CWPB cells.

9.3.2 Fluoride Emissions Control Systems with Extreme Solid Waste Impacts

Extremes in solid waste generation resulting from fluoride control are illustrated by two individual plant examples. Table 9-17 compares the overall environmental impacts of a plant with both primary and secondary wet control and a plant with dry primary control only. The two plants chosen as illustrative examples are both vertical stud Soderbergs. Plant 3B employs primary dry scrubbing only, while Plant 20 utilizes primary wet scrubbers and wet electrostatic precipitators as well as secondary spray screen scrubbers. These two examples also show

Table 9-17. FLUORIDE EMISSIONS CONTROL SYSTEMS WITH EXTREME SOLID WASTE IMPACTS

Plant Code	3B	20
Cell Type	VSS	VSS
Capacity (Tons Al/Yr)	185,000	120,000
Primary Control Scheme	Fluidized Bed Dry Scrubbing	Wet Scrubber and Electrostatic Precipitator
Secondary Control Scheme	None	Spray Screen Scrubber
Air Fluoride Emissions (Tons F/Yr)	833	122
Average Fluoride Air Emissions (Lb F/Ton Al)	9.0	2.0
Effluent Emissions: Fluoride (Tons F/Yr)	0	6
Total Suspended Solids (Tons/Yr)	0	12
Fluoride Control Energy Requirements (Mwh/Yr)	39,000	55,600
Average Fluoride Control Energy Requirements (Kwh/Ton Al)	211	463
Fluoride Control Related Solid Waste Generation (Tons/Yr)	0	11,400
Average Fluoride Control Related Solid Waste Generation (Lb/Ton Al)	0	190

the large fluoride air emissions reductions which can be realized with judicious application of secondary control.

As shown in Table 9-17, Plant 20 generates 190 pounds of fluoride sludge per ton of aluminum produced. This sludge generation implies an annual production of 11,400 tons of solid waste containing CaF_2, $CaSO_4$ (generated from sulfur in carbon anodes) and other insoluble compounds. Sludge of this type can usually be safely landfilled. Plant 3B does not discharge any effluent emissions or produce solid waste, but this plant has average fluoride air emissions 4.5 times greater than Plant 20. For vertical stud Soderberg cells and other cells with similar emissions characteristics, the increase in solid waste and effluent emissions resulting from wet primary and secondary control is justified by the dramatic decrease in fluoride emissions. Plant 3B with primary dry control only, discharges 833 tons of fluoride per year into the atmosphere; Plant 20 emits only 122 tons of fluoride per year.

9.4 ENERGY

The energy assessment has been prepared through application of a procedure similar to the ones employed for the other impact area analyses. Average energy consumption requirements for the numerous fluoride emissions control schemes (Table 9-18) have been applied to the individual plant control options contained in Tables 7-2 and 7-3 or defined in Section 9. National and average fluoride emissions control energy requirements are presented in Section 9.4.1, and examples of fluoride control systems with extreme energy impacts are outlined in the section immediately following. Energy consumption figures in Table 9-18 and throughout the energy assessment represent the amount of energy required for both air and water pollution control and have been obtained from References (7) and (8). In some instances, the energy required for water treatment

Table 9-18. ENERGY REQUIREMENTS FOR PRIMARY ALUMINUM FLUORIDE EMISSIONS CONTROL SYSTEMS[7,8]

Fluoride Control System	Average Energy Requirements (kwh/ton Al)	
	Electrical	Thermal[a]
Dry Scrubbing	211	0
Primary Wet Scrubbing with Cryolite Recovery Water Treatment	78	181
Secondary Wet Scrubbing with Cryolite Recovery Water Treatment	357	181
Primary Wet Scrubbing with Lime Water Treatment	76	0
Secondary Wet Scrubbing with Lime Water Treatment	300	0
Electrostatic Precipitator Incremental Power when Used in Series with Another Primary Control Device	87	0
Primary Venturi Scrubbing	600	0
Primary Multiclone	75	0
Primary Wet Electrostatic Precipitator with Lime Water Treatment	100	0

[a]Thermal energy supplied by fossil fuels is required to operate rotary kilns and generate steam when practicing cryolite recovery water treatment.

exceeds that for fluoride air emissions control.

9.4.1 National Fluoride Emissions Control Energy Requirements for the Primary Aluminum Industry

National energy requirements for the three basic levels of fluoride emissions control are listed in Table 9-19. As shown in the last column of Table 9-19, emission control will increase fluoride control energy expenditures for the primary aluminum industry by as little as 120,000 megawatt-hours (Mwh) per year over the initial level of control. This increase in energy demand would require an additional 14 megawatts of electrical power generation nationally. With 31 existing domestic primary aluminum plants, the average incremental fluoride control power expense resulting from best hooding and primary control will amount to only 0.44 megawatts per plant. In comparison, an average of 283 megawatts of electrolytic power is required per domestic primary aluminum plant. Thus, incremental fluoride control power expenditures for the case given are equivalent to only a 0.15 percent increase in average electrolytic power.

Table 9-20 presents the average fluoride control energy requirements by cells type for the alternative levels of emissions control. On an absolute basis, the average energy requirements per ton of aluminum for each cell type is primarily a function of the percentage of that cell type with secondary control. By examining the row entitled "Best Primary and Secondary Control", it is clear that when all cell types are upgraded to the level of best secondary control the average energy requirement for all cell types is 600 $\pm$ 90 kilowatt-hours (kwh) per ton of aluminum. In contrast, the other two levels of control require a wide range of average fluoride control energy expenditures: these range from

Table 9-19. NATIONAL FLUORIDE EMISSIONS CONTROL ENERGY REQUIREMENTS FOR THE PRIMARY ALUMINUM INDUSTRY

Air Pollution Control Level	National Fluoride Control Energy Requirements (Mwh/Yr)				
	VSS[a]	HSS[a]	CWPB[a]	SWPB[a]	Total
Initial	270,000	280,000	520,000	400,000	1,470,000
Best Hooding and Primary Control	270,000	280,000	590,000	450,000	1,590,000
Best Primary and Secondary Control	400,000	590,000	1,400,000	510,000	2,900,000

[a]VSS - vertical stud Soderberg; HSS - horizontal stud Soderberg; CWPB - center-worked prebake; SWPB - side-worked prebake.

Table 9-20. AVERAGE FLUORIDE EMISSIONS CONTROL ENERGY REQUIREMENTS FOR THE PRIMARY ALUMINUM INDUSTRY

Air Pollution Control Level	Average Fluoride Control Energy Requirements (Kwh/Ton Al)			
	VSS[a]	HSS[a]	CWPB[a]	SWPB[a]
Initial	420	260	190	540
Best Hooding and Primary Control	420	270	220	610
Best Primary and Secondary Control	620	570	520	690

[a]VSS - vertical stud Soderberg; HSS - horizontal stud Soderberg; CWPB - center-worked prebake; SWPB - side-worked prebake

a low of 190 kwh per ton of aluminum for CWPB cells to a high of 610 kwh per ton of aluminum for SWPB cells. The wide range of fluoride control energy requirements reflects the varying percentages of cell capacities that would be required to install or maintain secondary controls.

9.4.2 Fluoride Emissions Control Systems with Extreme Energy Impacts

Table 9-21 shows the extremes in energy requirements of the various fluoride emissions control schemes, and lists the overall environmental impact for two individual plants. Plant 21A employs CWPB cells and is equipped with primary multiclones only. Plant 18 is one of the best controlled, but the most control-energy-intensive of primary aluminum plants. Although Plant 21A has no effluent emissions or solid waste production, its average energy expenditure of only 75 kwh per ton of aluminum yields high average emissions of 14 pounds of fluoride per ton of aluminum produced. Plant 18 uses ten times as much energy to control fluoride emissions; however, its average emissions are 1.3 pounds of fluoride per ton of aluminum produced. One significant aspect of Plant 18 is that nearly one-third of the energy utilized in control of fluorides is a result of cryolite recovery water treatment. Substitution of lime treatment only, in place of the cryolite recovery systems, would decrease average energy consumption by 240 kilowatt-hours per ton of aluminum produced.

9.5 OTHER ENVIRONMENTAL IMPACTS

Because of the electrical power required to control fluorides emitted by the primary aluminum industry, each alternative level of fluoride control has a unique indirect pollution penalty. Although many primary aluminum plants are supplied with hydroelectric base load power,

Table 9-21. FLUORIDE EMISSIONS CONTROL SYSTEMS WITH EXTREME ENERGY IMPACTS

Plant Code	21A	18
Cell Type	CWPB	SWPB
Capacity (Tons Al/Yr)	70,000	260,000
Primary Control Scheme	Multiclones	Injected Alumina Dry Scrubbing
Secondary Control Scheme	None	Spray Scrubbing with Cryolite Recovery
Air Fluoride Emissions (Tons F/Yr)	490	169
Average Air Fluoride Emissions (Lb F/ton Al)	14	1.3
Effluent Emissions: Fluoride (Tons F/Yr)	0	13
Total Suspended Solids (Tons/Yr)	0	26
Fluoride Control Energy Requirement (Mwh/Yr)	5,250	195,000
Average Fluoride Control Energy Requirements (Kwh/Ton Al)	75	750
Solid Waste Generated from Control of Fluoride Emissions (Tons/Yr)	0	20,800
Average Solid Waste Generation Factor from Control of Fluoride Emissions (Lb/Ton Al)	0	160

swing loads are often handled by coal-fired steam generators. In order to determine the maximum indirect pollution penalty associated with the alternative levels of fluoride control, it has been assumed that all fluoride control power requirements are supplied by coal-fired steam-electric plants. Table 9-22 lists incremental SO_2, nitrogen oxides (NO_x), and particulate emissions which would be emitted by the power generation required for the alternative levels of fluoride control. In preparation of Table 9-22, it has been assumed that the steam generators employed can meet the applicable standards of performance for new stationary sources.

Comparing the first and last rows of Table 9-22, the incremental indirect pollution penalty of the fluoride emissions controls is apparent. Adoption of the proposed emission limits would cause an incremental minimum of 700 tons per year of SO_2, 500 tons per year of NO_x, and 60 tons per year of particulates to be discharged to the atmosphere from the impacted power plants. Although the national mass emissions of indirect pollutants seems to be high, only a negligible effect on ambient air quality will result.

9.6 OTHER ENVIRONMENTAL CONCERNS

9.6.1 Irreversible and Irretrievable Commitment of Resources

The only major irreversible impacts of the alternative fluoride emissions control levels are the amounts of ultimate fossil-fuel required to generate the necessary electrical power. Continuing with the assumptions made in Section 9.5, national bituminous coal requirements have been calculated for the same alternative levels of fluoride control and are presented in Table 9-23. Although the probability is not high that all

Table 9-22. NATIONAL CRITERIA POLLUTANT EMISSIONS RESULTING FROM THE ELECTRIC POWER GENERATED TO CONTROL PRIMARY ALUMINUM FLUORIDE EMISSIONS

Fluoride Air Pollution Control Level	National Criteria Pollutant Emissions from Impacted Power Plants (Tons/Yr)		
	SO_2	NO_x	Particulate
Initial	8,800	5,100	740
Best Hooding and Primary Control	9,500	5,600	800
Best Primary and Secondary Control	17,400	10,200	1,500

Table 9-23. NATIONAL BITUMINOUS COAL REQUIREMENTS IMPLIED BY PRIMARY ALUMINUM FLUORIDE CONTROL

Fluoride Emissions Control Level	National Bituminous Coal[a] Requirements (Tons/Yr)
Initial	612,000
Best Hooding and Primary Control	662,000
Best Primary and Secondary Control	1,210,000

[a] For calculational purposes, bituminous coal was assumed to have a high heating value of 12,000 Btu/lb.

fluoride control energy requirements would be supplied by bituminous coal, incremental fluoride control energy consumption will increase fossil-fuel consumption directly or indirectly.

As shown in Table 9-23, the best fluoride primary control will increase national bituminous coal (or other equivalent fossil-fuel) consumption by 50,000 tons per year. Any additional drain upon fossil-fuel reserves would be negligible compared to overall national fossil-fuel energy requirements. In fact, an equivalent amount of energy would be required if only one average size aluminum plant increased its capacity by about 3 percent.

9.6.2 Environmental Impact of Delayed Action

Postponement of any fluoride emission limits would have some deleterious effect upon the environment. Although some states have strict fluoride emissions standards for primary aluminum plants, many do not. Without the impetus for proper maintenance of existing control systems, current fluoride emissions could conceivably increase significantly. Federal effluent guidelines for primary aluminum plants will go into effect regardless of air emissions limitations, and consequently, several wet control systems could be abandoned if adequate air emissions limits are not implemented. Thus, the suggested air emissions limitations procedures will not only require poorly controlled plants to upgrade or install new control systems, they will also force well-controlled plants to maintain their existing control systems.

9.6.3 Environmental Impact of No Action

The environmental impact of failing to implement any additional emission limits is represented by the "Initial" level of fluoride control

used throughout the environmental impact assessment. As stated in the previous section, the environmental impact of no fluoride emission limits could be considerably more severe than that for the initial level of control. Poor maintenance and the abandonment of existing control systems could further increase fluoride air emissions. Thus, it must be realized that the initial level of fluoride control is a conservative estimate of the effect of not implementing additional controls for existing plants. With this limitation in mind, Table 9-24 compares the overall environmental impact of the "Best Hooding and Primary Control" to that for the initial level of control.

As discussed in Section 9.1, failure to adopt any of the suggested emission controls for the primary aluminum industry would result in national fluoride emissions of at least 18,000 tons per year, versus 9,000 tons per year for the improved control. With or without State action on air emissions limits, effluent discharges and solid waste generation by the primary aluminum industry will remain at nearly the same level. The only beneficial impact of failing to adopt additional emission limits would be an energy savings of 120,000 megawatt-hours per year for the case shown in Table 9-24. This energy savings is negligible in comparison to the amount of energy used in normal primary aluminum plant operation.

Table 9-24. ENVIRONMENTAL IMPACT OF NO ADDITIONAL STATE FLUORIDE AIR EMISSIONS LIMITATIONS FOR THE PRIMARY ALUMINUM INDUSTRY

National Impacts	Fluoride Emissions Control Level: Initial	Fluoride Emissions Control Level: Best Hooding and Primary Control
National Fluoride Air Emissions (Tons F/Yr)	18,000	9,000
National Effluent Emissions:		
Fluoride (Tons F/Yr)	110	85
Total Suspended Solids (Tons/Yr)	210	170
National Fluoride Control Energy Requirements (Mwh/Yr)	1,470,000	1,590,000
National Fluoride Control Related Solid Waste Generation (Tons/Yr)	160,000	130,000

9.7 REFERENCES FOR SECTION 9

1. Memorandum from Laurence J. Budney to Stanley T. Cuffe. Primary Aluminum Retrofit Controls; Impact. Monitoring and Data Analysis Division, OAQPS, EPA. February 4, 1974.

2. User's Manual for Single Source (CRSTER) Model. EPA-450/2-77-013. U.S. Environmental Protection Agency, Research Triangle Park, N.C., 1977.

3. Air Pollution Control in the Primary Aluminum Industry. Singmaster and Breyer, New York, N.Y. Prepared for Office of Air Programs, Environmental Protection Agency, Research Triangle Park, N.C. under Contract Number CPA 70-21. July 23, 1973. pp. 5-14 to 5-16.

4. Reference 2, above, p. 4-11.

5. Development Document for Effluent Limitations Guidelines and Standards of Performance. Nonferrous Metals Industry. Part II - Primary Aluminum Smelting. Battelle Columbus Laboratories, Columbus, Ohio. Prepared for Office of Air and Water Programs, Environmental Protection Agency, Washington, D.C. under Contract Number 68-01-1518. (Draft Contractor's Report, dated June 1973).

6. Reference 4, above, pp. 3 and 4.

7. Reference 4, above, p. 115.

8. Reference 2, above, pp. 5-14 to 5-16.

TECHNICAL REPORT DATA
(Please read Instructions on the reverse before completing)

1. REPORT NO. EPA 450/2-78-049b	2.	3. RECIPIENT'S ACCESSION NO.
4. TITLE AND SUBTITLE Primary Aluminum: Guidelines for Control of Fluoride Emissions From Existing Primary Aluminum Plants		5. REPORT DATE December 1979
		6. PERFORMING ORGANIZATION CODE
7. AUTHOR(S)		8. PERFORMING ORGANIZATION REPORT NO.
9. PERFORMING ORGANIZATION NAME AND ADDRESS U.S. Environmental Protection Agency Office of Air Quality Planning and Standards Research Triangle Park, NC. 27711		10. PROGRAM ELEMENT NO.
		11. CONTRACT/GRANT NO.
12. SPONSORING AGENCY NAME AND ADDRESS DAA for Air Quality Planning and Standards Office of Air, Noise, and Radiation U.S. Environmental Protection Agency Research Triangle Park, North Carolina 27711		13. TYPE OF REPORT AND PERIOD COVERED
		14. SPONSORING AGENCY CODE EPA 200/04

15. SUPPLEMENTARY NOTES

16. ABSTRACT

This document serves as a text to State agencies in planning for control of fluoride emissions from existing primary aluminum plants. Achievable fluoride capture and removal efficiencies are given for new retrofit hooding and for primary and secondary removal devices, respectively. Methods for deriving capital and annualized costs are illustrated by a few examples. Costs and fluoride emission reductions achieved by actual retrofits are given for ten plants, and the construction scope of work is described in detail for three of these plants. The guidelines are presented as recommended control technologies that will achieve certain average control efficiencies when applied as new retrofits to existing plants.

17. KEY WORDS AND DOCUMENT ANALYSIS

a. DESCRIPTORS	b. IDENTIFIERS/OPEN ENDED TERMS	c. COSATI Field/Group
Primary aluminum plants, existing Fluorides State Guidelines for emission control Hooding efficiency Fluoride removal efficiency Retrofit control costs	Air Pollution Control	13B

18. DISTRIBUTION STATEMENT Unlimited	19. SECURITY CLASS *(This Report)* Unclassified	21. NO. OF PAGES 343
	20. SECURITY CLASS *(This page)* Unclassified	22. PRICE No Charge

EPA Form 2220-1 (9-73)