OSWER Policy Directive No. 9483.00-1
EPA/530-SW-86-044

Technical Resource Document for the Storage and Treatment of Hazardous Waste in Tank Systems

Prepared for:

U.S. Environmental Protection Agency
Office of Solid Waste
Waste Management Division
Waste Treatment Branch
Washington, DC 20460

December 1986

TABLE OF CONTENTS

	Page
Table of Contents	i-vii
List of Figures	viii-x
List of Tables	xi-xiii
List of Acronyms	xiv
EXECUTIVE SUMMARY	1
1.0 INTRODUCTION	
1.1 Applicability	1-1
1.2 Purpose of the Document	1-1
1.3 Specific Information Requirements	1-3
1.4 Organization of the Document	1-5
1.5 Other Guidance Manuals	1-6
2.0 BACKGROUND	
2.1 Status of Subtitle C--Hazardous Waste Management	2-1
2.2 Status of Subtitle C Rulemaking for Tanks	2-1
3.0 THE PERMITTING PROCESS	
3.1 Permitting Steps	3-3
3.2 The Permit Application and the Permit	3-6
3.3 Where to Submit Applications	3-7
3.4 Confidentiality	3-7
3.5 Appeals	3-9
4.0 WRITTEN ASSESSMENT OF TANK SYSTEMS	
4.1 Tank System Design and Testing	4-2
A) Design Standards	4-6
B) Characteristics of Waste	4-12
C) Corrosion Protection Measures	4-20
D) Documented Age of the Tank System	4-20
E) Leak-Tests, Inspections, and Other Examinations	4-20
1. Temperature	4-26
2. Water Tables	4-28
3. Tank End Deflection	4-28
4. Evaporation	4-30
5. Trapped Air and Vapor Pockets	4-30
6. Sludge	4-31

TABLE OF CONTENTS (Continued)

	Page
F) Internal Inspections	4-31
1. Preparation for Internal Inspection - Tank Cleaning	4-31
2. Internal Inspection	4-34
G) Ancillary Equipment Assessment	4-41
H) Assessment Schedule	4-41
I) Leaking or Unfit-For-Use Tank Systems	4-42
4.2 Summary of Major Points	4-42
5.0 DESIGN OF NEW TANK SYSTEMS OR COMPONENTS	
5.1 Dimensions and Capacity of the Tank	5-1
A) Aboveground Tanks	5-6
B) Underground Tanks	5-7
5.2 Description of Feed Systems, Safety Cutoff, Bypass Systems, and Pressure Controls	5-10
A) Feed Systems	5-11
1) Level Sensors	5-11
2) Alarm System	5-12
3) Liquid Transfer	5-12
B) Safety Cutoff or Bypass Systems	5-14
C) Pressure Controls (e.g., Vents)	5-14
5.3 Diagram of Piping, Instrumentation, and Process Flow	5-18
5.4 External Corrosion Protection	5-23
5.4.1 Corrosion Potential Assessment	5-23
A) Soil Moisture Content	5-30
B) Soil Resistivity	5-31
C) Soil Sulfides Level	5-33
D) Soil pH	5-33
E) Structure-to-Soil Potential	5-34
F) Influence of Nearby Underground Metal Structures	5-34
G) Existence of Stray Electric Current	5-35
H) Existing Corrosion Protection Measures	5-36
5.4.2 Corrosion Protection Assessment	5-38
A) Corrosion-Resistant Materials of Construction	5-39
B) Corrosion-Resistant Coating	5-39
C) Cathodic Protection	5-42
1) Sacrificial Anode	5-43
2) Impressed Current	5-43
D) Electrical Isolation Devices	5-46
5.5 Protection From Vehicular Traffic	5-48
5.6 Foundation Load & Anchoring	5-49

TABLE OF CONTENTS (Continued)

		Page
5.7	Protection Against Frost Heave	5-53
5.8	Summary of Major Points	5-55
6.0	INSTALLATION OF NEW TANK SYSTEMS	
6.1	Proper Handling Procedures	6-1
	A) Installation Inspectors	6-2
	B) Independent, Qualified, Registered Professional Engineers	6-3
	C) Installation Inspection Procedures	6-3
	D) Repairs	6-7
6.2	Backfilling	6-13
	A) Backfill Material	6-13
	B) Backfill Placement	6-14
6.3	Pre-Service Tank and Ancillary Equipment Testing	6-18
	A) Tanks	6-18
	B) Piping	6-19
	C) Repairs	6-19
6.4	Ancillary Equipment Installation	6-20
6.5	Corrosion Protection System Installation	6-23
6.6	Certifications of Design and Installation	6-27
6.7	Description of Tank System Installation	6-29
6.8	Summary of Major Points	6-29
7.0	SECONDARY CONTAINMENT SYSTEMS AND RELEASE DETECTION	
7.1	Secondary Containment Implementation Schedule	7-2
7.2	Properties of a Secondary Containment System	7-3
7.3	Design Parameters	7-4
	A) Compatibility and Strength	7-5
	B) Foundation Integrity	7-8
	C) Leak Detection Capability	7-8
	1) Tank Excavation Monitoring Systems	7-9
	2) Leak Sensors	7-12
	3) Interstitial Monitoring (Leak Detection)	7-18
	D) Adequate Drainage	7-19
7.4	Types of Secondary Containment	7-21
7.5	Liner Requirements	7-21
	A) Concrete	7-30
	B) Synthetic Flexible Membranes	7-34
	C) Clay	7-35
	D) Bentonites	7-36
	E) Soil Cement	7-36
	F) Asphalt	7-37
7.6	Vault Requirements	7-37
7.7	Double-Walled Tank Requirements	7-44

Page

7.8 Ancillary Equipment With Secondary Containment 7-46
A) Lined Trenches 7-49
B) Concrete Trenches 7-50
C) Double-Walled Piping 7-51
D) Jacketing 7-51
7.9 Summary of Major Points 7-53

8.0 VARIANCES FROM SECONDARY CONTAINMENT

8.1 Technology-Based Variance 8-2
A) Releases to the Zone of Engineering Control 8-5
B) Releases Outside the Zone of Engineering Control 8-6
8.2 Risk-Based Variance 8-7
A) Source 8-9
B) Transport Media 8-10
C) Receptors 8-11
D) Risk-Based Variance Examples 8-12
8.3 Variance Implementation Procedures 8-14
8.4 Summary of Major Points 8-15

9.0 CONTROLS AND PRACTICES TO PREVENT SPILLS AND OVERFILLS

9.1 Underground Tanks 9-2
A) Elements of an Overfill Prevention System For Underground Storage Tanks 9-2
1) Automatic Shutoff Controls 9-3
2) Level-Sensing Devices and Indicators 9-3
3) High-Level Alarms 9-11
B) Transfer Spill-Prevention Systems For Underground Tanks 9-11
1) Check Valves 9-13
2) Couplings 9-13
C) Proper Operating Practices During Loading and Unloading 9-19
9.2 Aboveground/Inground/Onground Tanks 9-22
A) Elements of an Overfill Prevention System For Aboveground/Inground/Onground Storage Tanks 9-24
1) Level-Sensors and Gauges 9-24
2) High-Level Alarms 9-36
3) Automatic Shutdown or Flow Diversion 9-37
4) Emergency Overflow to Adjacent Tanks 9-37
5) Monitoring Systems 9-38
B) Transfer Spill Prevention Systems For Aboveground/Inground/Onground Tanks 9-39
1) Dry-Disconnect Couplings 9-39

Page

2) Redundant Valving and Instrumentation 9-39
C) Proper Operating Practices During Loading and Unloading 9-40
1) Proper Transfer Practices 9-40
2) Recommended Areas for Transfer Operations .. 9-40
3) Inspection and Maintenance 9-40
9.3 Uncovered Tanks--Freeboard 9-41
9.4 Summary of Major Points 9-42

10.0 INSPECTIONS

10.1 Schedule and Procedures for Overfill Control System Inspections 10-3
10.2 Daily Inspections of Aboveground Portions of Tank Systems and Monitoring and Leak Detection Data 10-6
A) Valves, Pipes, Fittings, and Hoses 10-8
B) Pumps and Compressors 10-9
C) Heat Exchangers 10-10
D) Vapor-Control Systems 10-10
10.3 Daily Inspection of Construction Materials, Local Areas, and Secondary Containment System for Erosion and Leakage 10-11
10.4 Inspection of Cathodic-Protection Systems 10-15
A) Cathodic-Protection Systems 10-16
B) Inspection of Impressed-Current Systems 10-16
10.5 Inspection Requirements Before Full Secondary Containment is Provided 10-18
10.6 Fiberglass-Reinforced Plastic (FRP) Tanks 10-20
10.7 Concrete Tanks 10-20
10.8 Inspection Tools and Electromechanical Equipment .. 10-22
10.9 Reporting Requirements 10-25
10.10 Summary of Major Points 10-25

11.0 RESPONSE TO LEAKS OR SPILLS AND DISPOSITION OF LEAKING OR UNFIT-FOR-USE TANK SYSTEMS

11.1 Response Actions for Leaks or Spills 11-4
11.1.1 Waste Flow Stoppage 11-4
11.1.2 Waste Removal 11-4
11.1.3 Visible Release Containment 11-6
11.1.4 Repair, Replacement, or Closure 11-10
11.1.5 Certification of Major Repairs 11-16
11.2 Required Notifications and Reports 11-17
11.3 Summary of Major Points 11-18

TABLE OF CONTENTS (Continued)

Page

12.0 CLOSURE AND POST-CLOSURE REQUIREMENTS

12.1 Decontamination/Removal Procedures for Closure: Where Decontamination and Removal of Wastes is Practicable and Where Secondary Containment is Provided (Category A) 12-3
A) Recommended Decontamination Criteria 12-5
B) Procedures for Abandoning Underground Tanks In Place (General) 12-7
C) Procedures for Abandoning Underground Tanks In Place (Sand-Pumping) 12-8
D) Procedures for Abandoning Onground, Inground, Aboveground Tanks in Place 12-10
E) Procedures for Preparation for Removal and Disposal of Tanks 12-10
12.2 Closure Plan and Closure Activities: The Part B Application 12-12
12.3 Closure of Tank System: When Decontamination and Removal of Waste is Not Practicable and and Where Secondary Containment is Provided (Category B)..... 12-15
12.4 Closure and Post-Closure Requirements: For Tank Systems That Do Not Have Secondary Containment (Categories C and D)..... 12-18
12.5 Closure/Post-Closure Cost Estimates 12-19
A) Closure Cost Estimates 12-20
B) Post-Closure Cost Estimates 12-22
12-6 Financial Assurance for Closure and Post-Closure Care 12-23
A) Financial Assurance for Closure Care 12-23
B) Financial Assurance for Post-Closure Care 12-23
12.7 Summary of Major Points 12-23

13.0 PROCEDURES FOR TANK SYSTEMS THAT STORE OR TREAT IGNITABLE, REACTIVE, OR INCOMPATIBLE WASTES

13.1 Ignitable or Reactive Wastes, General Precautions .. 13-1
13.2 Distance Requirements for Ignitable or Reactive Wastes 13-7
13.3 Incompatible Wastes 13-20
13.4 Summary of Major Points 13-33

APPENDIX A: COMPLETENESS CHECKLIST

APPENDIX B: PAINT FILTER LIQUIDS TEST

TABLE OF CONTENTS (Continued)

APPENDIX C: SYNOPSIS OF PERTINENT EPA GUIDANCE MANUALS

APPENDIX D: TECHNICAL GUIDANCE DOCUMENTS

APPENDIX E: DEFINITIONS

APPENDIX F: FIGURE SOURCES

APPENDIX G: COMPATIBILITY TEST FOR WASTES AND MEMBRANE LINERS (EPA Method 9090)

BIBLIOGRAPHY

LIST OF FIGURES

Figure No.	Title	Page
5-1	Tank Dimensions	5-3
5-2	Tank Dimensions (cont.)	5-4
5-3	Tank Dimensions (cont.)	5-5
5-4	Piping Details for Suction or Submerged Pumps	5-20
5-5	Elements of an Underground Storage Facility	5-21
5-6	Aboveground Tank System Connections	5-22
5-7	Corrosion Mechanisms	5-28
5-8	Corrosion Mechanisms (cont.)	5-29
5-9	Sacrificial-Anode Cathodic Protection	5-44
5-10	Factory-Installed Sacrificial-Anode	5-45
5-11	Impressed-Current Cathodic Protection	5-47
5-12	Anchoring Techniques	5-51
6-1	Proper Tank Lifting and Placement	6-5
6-2	Excavation Design: Recommended Distance from the Nearest Foundation	6-8
6-3	Excavation	6-9
6-4	Tank Installation Checklist	6-10
6-5	Backfill	6-16
6-6	Partially Buried Vertical Hazardous Waste Tank with Secondary Containment	6-24
6-7	Underground Tank and Piping System	6-25
6-8	Aboveground Tank	6-26
7-1	Observation Well Installation	7-13
7-2	U-Tube Placement	7-14

LIST OF FIGURES (Continued)

Figure No.	Title	Page
7-3	Detail: Secondary Containment for Aboveground Tanks	7-20
7-4	Tank With External Liner	7-22
7-5	New Aboveground Tank	7-23
7-6	Multiple Tanks in a Vault	7-24
7-7	Double-Walled Tank Configurations	7-25
7-8	Cross Sectional View of a Double-Walled Tank	7-26
7-9	Typical Earthen Dike Construction	7-28
7-10	Intersection of Flexible Membrane Trench Liner and Tank Excavation Liner	7-29
7-11	Waterproofing at Corner of Vault Base	7-40
7-12	Tank Wrapped in Flexible Membrane	7-45
7-13	Example Containment Structure for Pump and Valve Installation	7-48
7-14	Double-Walled Pipe System	7-52
9-1	Tape Float Gauge for Underground Storage Tanks	9-7
9-2	Float Vent Valves	9-8
9-3	Optical Liquid Level Sensing System for Bulk Storage System	9-12
9-4	Types of Valves - Example One	9-15
9-5	Types of Valves - Example Two	9-16
9-6	Check Valves Used to Prevent Backflow	9-17
9-7	Cross Sections of Check Valves	9-18
9-8	Types of Couplings	9-20
9-9	Elements of an Overfill Prevention System	9-23

LIST OF FIGURES (Continued)

Figure No.	Title	Page
9-10	Chain and Tape Float Gauges	9-27
9-11	Level and Shaft Float Gauges	9-28
9-12	Magnetically Coupled Floats	9-29
9-13	Flexure Tube Displacer	9-31
9-14	Magnetically Coupled Displacer	9-32
9-15	Torque Tube Displacer	9-33
9-16	Bubble Tube System	9-35
9-17	Loading Arm Equipped With Automatic Shutoff	9-38
10-1	Areas of Concern in a Typical Tank Foundation	10-14
13-1	40 CFR 261.21 Characteristics of Ignitability, and 40 CFR 261.23 Characteristics of Reactivity	13-3
13-2	40 CFR 264.17 General Requirements for Ignitable, Reactive or Incompatible Wastes	13-4
13-3	Compatibility Matrix	13-29, 30

LIST OF TABLES

Table No.	Title	Page
1-1	Exemptions from 40 CFR 264, Subpart J	1-2
2-1	Resource Conservation and Recovery Act	2-2
3-1	Sections of 40 CFR Parts 270 and 264 Addressed In this Manual	3-2
3-2	EPA Regional Hazardous Waste Program Offices	3-4
4-1	Nationally Accepted Tank Design Standards	4-7
4-2	Impact of Selected Waste Properties on Tank Design	4-13
4-3	Compatibility of Materials of Construction With Various Chemicals	4-14
4-4	General Information on Leak-Testing Devices	4-22
4-5	Thermal Expansion of Liquids	4-76
4-6	Total Force on Tank Ends	4-29
4-7	Checklist for Tank Internal Inspection	4-35
5-1	Vertical and Horizontal Aboveground Steel Tank Minimum Wall Thickness	5-8
5-2	Aboveground Reinforced-Plastic Tank Minimal Graduated Wall Thickness	5-9
5-3	Common Forms of Localized Corrosion	5-26
5-4	Environments That Can Cause Corrosion	5-27
5-5	Coating/Lining vs. Chemicals	5-40
7-1	Applicability of Types of Leak Sensors	7-11
7-2	Comparison of Various Leak-Sensing Techniques	7-16

LIST OF TABLES (Continued)

Table No.	Title	Page
7-3	General Characteristics of Impermeable Barriers for Concrete Vaults	7-42
9-1	Characteristics of Pneumatic and Electronic Controls	9-4
9-2	Level-Detection Devices for Underground Storage Tanks	9-6
9-3	Transfer Spill-Prevention Systems	9-14
9-4	Level-Detection Devices for Overfill Protection Systems for Aboveground/Inground/Onground Storage Tanks	9-25
10-1	Inspection Requirements Before Secondary Containment is Provided	10-4
10-2	Inspection Requirements--After Full Secondary Containment is Provided	10-5
11-1	Section 264.196 Required Responses to Tank System Releases	11-12
12-1	Closure/Post-Closure Requirements	12-2
13-1	Ignition Prevention References	13-6
13-2	Definition and Classification For Tank Contents by NFPA	13-9
13-3	Stable Liquids--Operating Pressure 2.5 PSIG or Less	13-12
13-4	Stable Liquids--Operating Pressure Greater than 2.5 PSIG	13-14
13-5	Boil-Over Liquid	13-15
13-6	Unstable Liquids	13-16
13-7	Class III B Liquids	13-18
13-8	Reference Table For Use In Tables 13-1, 13-3, and 13-4	13-19
13-9	List of Chemical Classes	13-24

LIST OF TABLES (Continued)

Table No.	Title	Page
13-10	List of Chemical Representatives by Class	13-25
13-11	Storage Tank Decontamination Methods	13-32

ACRONYMS

AA	Aluminum Association
ACI	American Concrete Institute
AISI	American Iron and Steel Institute
ANSI	American National Standards Institute
API	American Petroleum Institute
ASME	American Society of Mechanical Engineers
ASTM	American Society for Testing and Materials
AWWA	American Water Works Association
CERCLA	Comprehensive Environmental Response, Compensation, and Liability Act of 1980
CFR	Code of Federal Regulations
DC	direct current
DOE	U.S. Department of Energy
DOT	U.S. Department of Transportation
EPA	U.S. Environmental Protection Agency
FML	Synthetic Flexible Membrane Liner
FR	Federal Register
FRP	Fiberglass Reinforced Plastic
HDPE	High Density Polyethylene
HSWA	Hazardous and Solid Waste Amendments of 1984
kPa	kilo Pascal
NACE	National Association of Corrosion Engineers
NFPA	National Fire Protection Association
NIOSH	National Institute for Occupational Safety and Health
NTIS	National Technical Information Services
PSD	Prevention of Significant Deterioration (related to air quality)
psi	pounds per square inch
PVC	poly vinyl chloride
RCRA	Resource Conservation and Recovery Act
SI unit	Systems International units
UIC	Underground Injection Control permit
UL	Underwriters Laboratories, Inc.

EXECUTIVE SUMMARY

The final rule for Hazardous Waste Storage and Treatment Tank Systems, published July 14, 1986, (effective date January 12, 1987) establishes new or revised tank system standards applicable to accumulation tank systems, interim status tank systems, and permitted tank systems. This final rule represents the Environmental Protection Agency's effort to fulfill the mandates of the Hazardous and Solid Waste Amendments of 1984 (HSWA) and to streamline various regulations that have proven ineffective or unworkable.

The overall goal of the rule is to protect human health and the environment from the risks posed by hazardous waste storage and treatment tank system facilities. This is to be accomplished through prevention of migration of hazardous waste constituents to ground and surface waters where such releases may present a risk to human health or the environment. A key element of the overall strategy is the need to detect releases quickly so that an appropriate response can be made.

There are six key features of the Agency's regulatory approach. The first feature pertains to maintaining the integrity of the primary containment system. The final rule requires that the primary systems for new and existing tank systems be appropriately designed and compatible with the wastes that are stored or treated.

The second feature concerns proper installation of the tank systems. Under the new rule an independent, qualified installation inspector or professional engineer must certify that a tank system is structurally sound prior to installation and that proper handling procedures are adhered to during installation.

Secondary containment with monitoring to detect leaks from the primary containment vessel is the third feature of the regulatory approach and must be

provided for all new hazardous waste tank systems. For existing tank systems, secondary containment with leak detection will be phased in.

Means for seeking variances from secondary containment for both new and existing tank systems are provided in the regulations through either 1) a demonstration that alternative design or operation will detect leaks and prevent the migration of any hazardous waste beyond a zone of engineering control, or 2) a demonstration that in the case of an impending release there will be no substantial threat to human health or the environment.

The fourth feature of the EPA's approach delineates provisions for adequate responses to releases of hazardous wastes. Under this rule, all releases to the environment must be reported to the EPA Regional Administrator.

The fifth feature emphasizes proper operation and inspection.

A final feature of the rule is that all owners or operators of hazardous waste tank systems provide adequate closure and, if necessary, post-closure care.

The EPA believes that releases of hazardous waste from a tank system will be curtailed by requiring design and installation standards for primary containment structures, corrosion protection for metal tank system components, secondary containment and leak detection, and quick response in the case of a release from the primary containment structure or other spill. Any releases of hazardous waste to the environment that might occur will be minimized by containment and detection and appropriate closure and post-closure care.

This technical resource document is provided to help owners and operators comply with the EPA's regulations for hazardous waste storage and treatment tank systems. The 13 sections cover the following topic areas: 1) Introduction; 2) Background; 3) The Permitting Process; 4) Written

Assessment of Tank Systems Integrity; 5) New Tank Design; 6) New Tank System Installation; 7) Secondary Containment and Detection of Releases; 8) Variances from Secondary Containment; 9) Appropriate Controls and Practices to Prevent Spills and Overflows; 10) Inspection; 11) Response to Leaks or Spills and Disposition of Leaking or Unfit-For-Use Tank Systems; 12) Closure and Post-Closure Care; and 13) Special Requirements for Ignitable or Reactive and Incompatible Wastes.

The first three sections provide an overview of 1) the content of the regulations; 2) the historical development of the regulations; and 3) a summary of the mechanics of the permitting process.

Section 4.0, Written Assessment of Tank Systems, delineates written assessment requirements for existing as well as new tank systems and includes technical guidance on the following areas: design standards; waste characteristics; tank description; leak tests, inspections and other examinations; internal inspection details; protection from vehicular traffic; foundations, loads and anchoring; and protection against frost heave.

Section 5.0, New Tank System Design, identifies the regulatory requirements for new tank system design and includes guidance on what information the general written description in the Part B application should include in the following areas: 1) dimensions and capacity of the tank; 2) descriptions of feed systems, safety cutoff bypass systems and pressure controls; 3) diagram of piping instrumentation and process flow; and 4) external corrosion protection, including corrosion potential assessment and corrosion protection assessment.

Section 6.0, Installation of New Tank Systems, offers technical guidance on proper installation handling procedures, backfilling, pre-service tank testing, piping system installation, corrosion protection system installation, reinstallation of existing tanks, and certification.

Section 7.0, Secondary Containment Systems and Release Detection, provides information on properties of secondary containment systems, design parameters, various structural options for secondary containment, liner requirements, vault requirements, double-walled tank requirements, secondary containment for ancillary equipment, and implementation schedule for existing tank systems.

Section 8.0, Variances from Secondary Containment, discusses procedures for seeking either risk-based or technology-based variances from secondary containment.

Section 9.0, Controls and Practices to Prevent Spills and Overfills, outlines generally accepted devices and procedures for preventing transfer spills and overfills in underground/aboveground/inground/onground tank systems. Some of the areas covered include: 1) elements of an overfill prevention system, such as level sensors and gauges, high-level alarms and automatic shutdown or flow-diversion systems; 2) dry disconnect couplings or transfer pipes and hoses; 3) redundant valving and instrumentation; and 4) use of established transfer stations.

Section 10.0, Inspections, delineates the inspection requirements for tank systems under the new rule and recommends appropriate procedures, tools and electro-mechanical equipment to be employed in conducting inspections.

Section 11.0, Response to Leaks or Spills and Disposition of Leaking or Unfit-for-Use Tank Systems, outlines the regulatory requirements and provides technical guidance on response actions for leaks or spills or such tasks as waste flow stoppage, waste removal, visible release containment, and repair, replacement, or closure.

Section 12.0, Closure and Post-Closure Requirements, in addition to identifying the regulatory requirements, provides guidance on 1) developing closure/post-closure plans, 2) carrying out closure and post-closure care activities, including decontamination and removal procedures during closure, and 3) developing closure and post-closure cost estimates.

Section 13.0, Special Requirements for Ignitable, Reactive or Incompatible Wastes, describes the information that must be provided in the Part B permit application for ignitables, reactives or incompatibles. In addition, this section recommends the general procedural precautions that should be taken in the handling, storage or treatment of these wastes, such as establishment of protective distances between the storage or treatment tank and public ways, streets and alleys.

Appendices include information on pertinent EPA technical resource documents, applicable technical documents, and tank-specific definitions. Also provided is a checklist (Appendix A) against which the owner or operator can verify compliance with the regulatory requirements.

1.0 INTRODUCTION

This document provides owners or operators of hazardous waste storage tanks guidance in preparing Part B permit applications and for the Federal and State officials who will be processing these applications required by Title 40, Code of Federal Regulations, Part 270 (40 CFR 270). Appropriate references to other titles in the Code of Federal Regulations are made to clarify, where possible, the full intent or scope of the regulations.

1.1 APPLICABILITY

Under these final regulations, tank systems storing or treating liquid hazardous waste, non-liquid wastes (such as solid hazardous wastes, residues, dried sludge, etc.), and/or gaseous hazardous waste are covered and must comply with the requirements in Part 264, Subpart J and Part 270, unless they qualify for a variance. Certain tank system types, however, qualify for an exemption from the secondary containment requirement (See Table 1-1).

1.2 PURPOSE OF THIS DOCUMENT

Title 40 CFR 270 establishes the requirements of the Environmental Protection Agency's (EPA) permit program for hazardous waste management facilities. It stipulates the information that the applicant must submit in the Part B permit application to demonstrate compliance with the minimum technical permitting standards for hazardous waste management facilities as contained in 40 CFR 264. Section 270.16 specifically stipulates the information that the owners or operators of hazardous waste storage and treatment tank systems must submit in a Part B permit application. Title 40 CFR 264.190-199 (Subpart J) stipulates minimum technical permitting standards specifically for hazardous waste storage and treatment tank systems.

TABLE 1-1

EXEMPTIONS FROM 40 CFR 264.193*

Type of Tank System	Exemption from Section
** (1) Indoor with impervious floor containing no free liquids (Sec. 264.190(a)(1))	§264.193 Secondary Containment
*** (2) Tank Systems & Sumps that serve as part of a secondary containment system	§264.193 Secondary Containment

* The owner or operator may be granted a technology based or risk-based variance from the requirements of §264.193. The requirements for obtaining a variance are outlined in Section 8.

** To demonstrate the absence or presence of free liquids in the stored/treated waste, EPA method 9095 [Paint Filter Liquids Test] as described in "Test Methods for Evaluating Solid Wastes, Physical/Chemical Methods," [EPA Publication No. SW-846] must be used. See Appendix B of this manual for Method 9095-Paint Filter Liquids Test.

*** "Sump" means any pit or reservoir that meets the definition of tank and those troughs/trenches connected to it that serve to collect hazardous waste for transport to storage, treatment, or disposal facilities.

Owners or operators of existing and new hazardous waste storage and treatment tank systems are required to submit Part B of their permit applications to illustrate compliance with the tank system permitting standards. If you are currently operating an existing facility under interim status (40 CFR 265), you will have submitted Part A of your application. Owners or operators of new facilities must submit Parts A and B together.

This document provides assistance to owners or operators of hazardous waste tank systems on preparing a complete Part B permit application (40 CFR 270) to demonstrate compliance with the applicable general permitting standards (40 CFR 264) as well as the tank-specific permitting standards (40 CFR 264, Subpart J). (See Section 3.0 of this document for further details on the permitting process and Table 3-1 for clarification of the relationship between Parts 264 and 270.)

1.3 SPECIFIC INFORMATION REQUIREMENTS

The specific Part B information requirements for tank systems are contained in 40 CFR 270.16, as revised July 14, 1986, and are the major focus of this document:

(a) A written assessment that is reviewed and certified by an independent, qualified, registered professional engineer as to the structural integrity and suitability of each tank system for handling the hazardous waste each holds;

(b) Description of the dimensions and capacity of each tank;

(c) Description of feed systems, safety cutoffs, bypass systems, and pressure controls;

(d) A diagram of piping, instrumentation, and process flow for each tank system;

(e) A description of the materials and equipment used to provide external corrosion protection;

(f) For new tank systems, a detailed description of how the tank system(s) will be installed;

(g) Detailed plans and description of how the secondary containment for each tank system is or will be designed, constructed, and operated;

(h) For tank systems for which a variance from the secondary containment requirements is sought: (1) detailed plans and engineering and hydrogeologic reports, as appropriate, describing alternate design and operating practices that will, in conjunction with location aspects, prevent the migration of any hazardous waste or hazardous constituents into the ground water or surface water during the life of the facility, or (2) a detailed assessment of the substantial present or potential hazards posed to human health or the environment should a release enter the environment (a detailed discussion of variances from secondary containment is being developed by EPA and should be available in early 1987);

(i) Description of controls and practices to prevent spills and overflows; and

(j) For tank systems in which ignitable, reactive, or incompatible wastes are to be stored or treated, a description of how operating procedures and tank system and facility design will achieve compliance with the special requirements for those types of wastes.

In addition, this document provides information on procedures for inspection, unfit-for-use tank system corrective action, and closure/post-closure care, as required under Part B General Information

Requirements 270.14(b)(5), (7), and (13). For each of these areas, this document presents: (1) the applicable regulatory citations; (2) guidance on meeting the information requirements and referenced standards; (3) examples of suitable application information; and (4) major points to address in preparing or reviewing the permit application.

Permit applicants must note that the 40 CFR 270.16 specific information requirements for hazardous waste tank system are only a tank system-specific supplement to the 40 CFR 270.14(b) general permit information requirements. Ultimately the 270.14(b) general information requirements must be submitted jointly with the information specific to tank systems (40 CFR 270.16) to complete Part B permit applications.

This document also gives introductory and background information to provide a better understanding of the overall regulations and permitting process. If the permit application is prepared in conformance with the specific guidance presented for Sec. 270.16 and in conformance with the entirety of the general information requirements for Sec. 270.14(b), it will, at a minimum, allow expeditious review by the EPA, and its likelihood of being approved should markedly improve.

1.4 ORGANIZATION OF THIS DOCUMENT

Introductory Sections 2.0 and 3.0 explain the background of the Resource Conservation and Recovery Act (RCRA) Subtitle C (the Hazardous Waste Management Subtitle of RCRA), the specific status of Subtitle C rulemaking for tanks, the RCRA permitting process employed by the EPA, and an overview of 40 CFR Parts 270 and 264. Sections 4.0-13.0 are divided in to several sub-sections for each of the major topic areas within a section. Each of these individual sub-sections has a corresponding citation and guidance section. The citation provided in the citation section is in most cases taken verbatim from the federal register. The reader should be informed, however, that in some instances the citation is paraphrased or abbreviated. This has been done for either clarity sake or to conserve space.

1.5 OTHER GUIDANCE MANUALS

Other guidance manuals exist or are in preparation and will be of use in preparing the overall Part B permit application. This document will note throughout when other guidance manuals would be particularly useful and in what sections of those manuals the pertinent information can be found. For instance, the "Permit Applicant's Guidance Manual for the General Facility Standards" will be a useful tool for complying with the general information requirements in a Part B permit application. In addition, EPA will soon publish "Technical Resource Document for Obtaining Variances from the Secondary Containment Requirement for Hazardous Waste Tank Systems", which is intended to provide technical assistance and information for owners/operators of hazardous waste tank systems applying for either a technology based or risk-based variance from the secondary containment requirements.

Appendices A and B provide a list of other pertinent technical documents, locations where they can be reviewed or purchased, and synopses of the documents. It is recommended that the permit applicant become familiar with the available literature because, in total, this body of information will be of great assistance in preparing a permit application acceptable to the Federal and State regulatory agencies.

2.0 BACKGROUND

In 1976, Congress passed the Resource Conservation and Recovery Act (RCRA) to regulate the handling and disposal of hazardous waste. This act mandated the development of regulations governing the actions of owners or operators who generate, transport, treat, store, or dispose of hazardous wastes.

The complete text of RCRA and its associated amendments are too long for inclusion in this document, but Table 2-1 provides a list of the major sections. Available sources for copies of this act and related laws are listed at the bottom of Table 2-1, p. 2-2.

RCRA, as amended by the Quiet Communities Act of 1978, the Used Oil Recycling Act of 1980, and the Solid Waste Disposal Act Amendments of 1980, is, itself, an amendment to Title II of the Solid Waste Disposal Act. RCRA was again amended on November 8, 1984, when the Hazardous and Solid Waste Amendments (HSWA) of 1984 were signed into law.

2.1 STATUS OF SUBTITLE C--HAZARDOUS WASTE MANAGEMENT

Hazardous and Solid Waste Amendments, "Subtitle C--Hazardous Waste Management," as amended, contains several sections which serve as the basis for the development of the hazardous waste regulations promulgated by the Environmental Protection Agency (EPA). Subtitle C states what EPA must do to govern hazardous waste handling and disposal and provides EPA with the authority to carry out the provisions of the Act.

2.2 STATUS OF SUBTITLE C RULEMAKING FOR TANKS

The EPA promulgated interim status standards for hazardous waste storage and treatment tanks in May 1980 under Part 265, Subpart J (45 FR 33244-33245). These standards emphasized the appropriate operating procedures for preventing hazardous waste releases from tanks.

TABLE 2-1

RESOURCE CONSERVATION & RECOVERY ACT
(NOVEMBER 1984)

"Sec. 3001.	Identification and listing of hazardous waste
"Sec. 3002.	Standards applicable to generators of hazardous waste
"Sec. 3003.	Standards applicable to transporters of hazardous waste
"Sec. 3004.	Standards applicable to owners and operators of hazardous waste treatment, storage, and disposal facilities
"Sec. 3005.	Permits for treatment, storage, or disposal of hazardous waste
"Sec. 3006.	Authorized State hazardous waste programs
"Sec. 3007.	Inspections
"Sec. 3008.	Federal enforcement
"Sec. 3009.	Retention of State authority
"Sec. 3010.	Effective date
"Sec. 3011.	Authorization of assistance to States
"Sec. 3012.	Hazardous waste site inventory
"Sec. 3013.	Monitoring, analysis, and testing
"Sec. 3014.	Restrictions on recycled oil
"Sec. 3015.	Expansion during interim status
"Sec. 3016.	Inventory of federal agency hazardous waste facilities
"Sec. 3017.	Export of hazardous waste
"Sec. 3018.	Domestic sewage
"Sec. 3019.	Exposure information and health assessments

NOTE: Copies of RCRA, as currently amended, may be obtained through USEPA Publications Department, Public Information Center, 820 Quincy Street, NW, Washington, DC 20001; telephone 800-828-4445.

Source: Resource Conservation and Recovery Act, PL98-616, Nov. 8, 1984. BNA, Environment Reporter, Dec. 28, 1984, 71:3101.

In January 1981, RCRA permitting standards were promulgated for hazardous waste storage and treatment tanks that could be entered for inspection. (Underground tanks that could not be entered for inspection were precluded from obtaining a RCRA permit.) These standards emphasized the structural integrity of tanks to protect against leaks, ruptures, or collapses. Requirements included:

1) adequate tank design;

2) maintenance of minimum shell thickness;

3) routine inspection schedules; and

4) specific requirements for ignitable, reactive, and incompatible wastes.

On July 14, 1986, Part 264 hazardous waste treatment and storage tank permitting standards were revised (51 FR 25422). These recent revisions serve many purposes. As stated in the preamble to the June, 1985 Proposal 50 FR 26444 (in which were proposed new regulations for hazardous waste tank systems that affect 40 CFR Parts 264, 265, and 270), they fulfill the regulatory approach for tanks described in the January 1981 Preamble by: (1) providing permitting standards under Part 264 for underground tanks that cannot be entered for inspection; (2) stipulating corrosion protection requirements for metal tank systems; and (3) specifying the selection of an appropriate secondary containment approach. These revisions also complied with the mandates of the HSWA amendments stipulating that new underground tank systems had to be equipped with leak-detection systems [RCRA Section 3004(o)(4)] and that the EPA had to issue permitting standards for underground tanks which cannot be entered for inspection [RCRA Section 3004(w)]. Also, additional revisions and requirements were warranted as certain existing tank standards had proven incomplete, unworkable, or both.

3.0 THE PERMITTING PROCESS

Two parts of Title 40 of the Code of Federal Regulations (40 CFR) contain information on the Resource Conservation and Recovery Act (RCRA) permitting process. Part 270 contains information on what an applicant and the Environmental Protection Agency (EPA) must do regarding a permit. This part also contains basic permitting requirements for EPA-administered RCRA programs, such as application requirements, standard permitting conditions, and monitoring and reporting requirements. Part 124 establishes the decision-making procedures for EPA issuance of RCRA permits and the procedures for administrative appeals of EPA permit decisions.

As mentioned in Section 1.0 of this document, separate technical permitting regulations are also stipulated in 40 CFR, Part 264, in addition to the requirements in Part 270. The Part 264 regulations establish minimum federal standards for acceptable management of hazardous waste. The text of Part 270 refers the reader to the sections of Part 264 that contain the standards with which a permit applicant must demonstrate compliance by submitting information in Part B of a permit application. To assist the applicant, Sections 4.0-13.0 of this document address the required information items as set forth in Part 270, identify the corresponding standards in Part 264, and provide information on how to obtain, prepare, and present information required by Part 270 that will demonstrate to the EPA that the facility is in compliance with the Part 264 standards. Table 3-1 delineates the 270.16 specific information requirements and the corresponding 264 permitting standards applicable to hazardous waste tanks.

As noted, applicants should use the guidance on procedures and methods in Sections 4.0-13.0 to prepare those parts of the Part B application that support the specific information requirements of 270.16 and the general information requirements in 270.14(b)(5), (7), and (13). In addition to the information requirements addressed in this document, applicants must also comply with the entirety of the 270.14(b) Part B General Information requirements.

TABLE 3-1

SECTION OF 40 CFR PARTS 270 AND 264 ADDRESSED IN THIS DOCUMENT

Document Sections	Part 270 Sections		Corresponding 264 Sections
4.0	270.16(a)	Written assessment of structural integrity reviewed and certified by an independent, registered professional engineer for: "Existing" tank systems "New" tank systems	 264.191(a)(b)(c)(d) 264.192(a)
5.0		Tank design features	
5.1	270.16(b)	Tank dimensions and capacity	None
5.2	270.16(c)	Description of feed systems	None
5.3	270.16(d)	Diagram of piping, instrumentation, and process flow	None
5.4	270.16(e)	Description of materials and equipment for corrosion protection	264.192(a)(3)
6.0	270.16(f)	New tank installation description	264.192(b)(c)(d)(e)
7.0	270.16(g)	Secondary containment system plans	264.193(a)(b)(c)(d)(e)(f)
8.0	270.16(h)	Information submittal for tanks for which a variance from secondary containment is sought	264.193(g)
9.0	270.16(i)	Spills and overfill prevention practices	264.194(b)
10.0	270.14(b)(5)	Inspection schedules	264.195
11.0	270.14(b)(7)	Response to unfit-for-use tank systems	264.196
12.0	270.14(b)(13)	Closure and post-closure plans	264.197
13.0	270.16(j)	Procedures for tank systems that store or treat ignitable or incompatible wastes	264.198 and 264.199

NOTE: Regulatory standards 264.195, 264.196, and 264.197, as revised, correspond to the 270.14(b) Part B General Facility Information Requirements. They are not addressed in the 270.16 revised specific Part B information requirements for tanks.

The addresses and telephone numbers of the various EPA Regional Hazardous Waste Program Offices are listed in Table 3-2. In addition, appendices are included at the end of the document to provide supplementary information, such as names and addresses of state and federal regulatory agencies and locations where the permit applicant can request pertinent documentation, reports, and maps. Information of a more technical nature is also included in Appendices A and B. (For further information on the overall steps in the permitting process, logistics on permit application submissions, confidentiality and appeal procedure information, see "Permit Applicant's Technical Resource Document for the General Facility Standards of 40 CFR 264.")

3.1 PERMITTING STEPS

This section of the document presents a simplified description of the major steps that must be taken by both an applicant and by the EPA during the RCRA permitting procedure. It also identifies those Parts of Title 40 that are important to an owner or operator seeking a RCRA permit.

The overall RCRA permitting process can be summarized in the following steps:

Step 1 The owner or operator of a hazardous waste management facility (in this case, tank systems that store or treat hazardous waste) completes Parts A and B of a RCRA permit application and submits the application to the appropriate EPA office.

Step 2 The EPA reviews the application for completeness. If incomplete, the EPA sends a list of deficiencies, in writing, to the applicant. If complete, the applicant is informed in writing.

Step 3 When necessary, the applicant prepares and submits the additional information requested.

TABLE 3-2

EPA REGIONAL HAZARDOUS WASTE PROGRAM OFFICES

Region I:	OFFICE OF THE DIRECTOR State Waste Programs Branch Waste Management Division John F. Kennedy Federal Building Boston, MA 02203 (617) 223-6883
Region II:	OFFICE OF THE DIRECTOR Solid Waste Branch Air and Waste Management Division 26 Federal Plaza New York, NY 10278 (212) 264-0505
Region III:	OFFICE OF THE DIRECTOR Waste Management Branch/RCRA Permit Section Air and Waste Management Division 841 Chestnut Street Philadelphia, PA 19107 (215) 597-0980
Region IV:	OFFICE OF THE DIRECTOR Residuals Management Branch/Waste Engineering Section Air and Waste Management Division 345 Cortland Street, NE Atlanta, GA 30365 (404) 347-3067
Region V:	OFFICE OF THE DIRECTOR Waste Management Branch Waste Management Division Federal Building 230 Dearborn Chicago, IL 60604 (312) 886-7579
Region VI:	OFFICE OF THE DIRECTOR Hazardous Materials Branch Air and Waste Management Division First International Building 1201 Elm Street Dallas, TX 75270 (214) 767-2730

Continued on next page.

TABLE 3-2--Continued

Region VII:	OFFICE OF THE DIRECTOR Waste Management Branch Air and Waste Management Division 726 Minnesota Avenue Kansas City, KN 66101 (913) 236-2888
Region VIII:	OFFICE OF THE DIRECTOR Waste Management Division RCRA Management Branch Suite 900, 1860 Lincoln Street Denver, CO 70295 (303) 293-1662
Region IX:	OFFICE OF THE DIRECTOR Programs Branch Toxics and Waste Management Division 215 Fremont Street San Francisco, CA 94105 (415) 974-8119
Region X:	OFFICE OF THE DIRECTOR RCRA Branch Air and Waste Management Division 1200 6th Avenue Seattle, WA 98101 (206) 442-2851

Step 4 The EPA again reviews the original and the additional submittals and notifies the applicant, in writing, of the completeness of the application.

Step 5 The EPA analyzes the information contained in the application and prepares a draft permit or issues a notice of intent to deny the application. In either case, the EPA simultaneously prepares and issues a statement of basis or a fact sheet.

Step 6 The EPA sends copies of the document prepared in Step 5 to the applicant, and simultaneously makes a public notice that a permit application has been prepared. The public notice will provide 45 days for public (and applicant) comment.

Step 7 If, at the time of public notice, or at any time during the 45-day comment period, anyone, including the EPA, requests a public hearing, one will be scheduled and announced a minimum of 30 days before the hearing date.

Step 8 The EPA prepares and issues a final permit decision.

These eight steps are a simplified description. A full description of the steps that the EPA must take after receiving a complete RCRA permit application is contained in 40 CFR Subpart A of Part 124 in Secs. 124.3 through 124.21.

3.2 THE PERMIT APPLICATION AND THE PERMIT

The RCRA permit application consists of two parts: Part A, a form requiring completion, and Part B, which has no standard format. This document is designed to assist applicants in preparing the information required in Part B of a RCRA permit application.

Part 270 of Title 40 of the CFR provides the information requirements necessary for a complete RCRA permit application (Parts A and B). All of the sections of Subpart B of Part 270 should be read and understood by an owner or operator who is applying for a RCRA permit for the first time.

The actual permit will consist of written approval of the complete application. It will require the applicant to adhere to all statements made in the application and will include conditions that must be complied with. Applicants interested in the types of conditions that may be contained in a permit are referred to Sec. 270.30 ("Conditions Applicable to All Permits") and Sec. 270.32 ("Establishing Permit Conditions").

3.3 WHERE TO SUBMIT APPLICATIONS

Table 3-2 lists the mailing addresses and the telephone numbers of the 10 EPA regional offices where permit applications should be submitted. Personnel in these offices may be contacted with any questions that may arise during preparation of a permit application.

Many states have their own hazardous waste permitting programs. These programs may be in addition to or in lieu of the EPA RCRA program. Any applicant who is unsure of which agency an application should be submitted to should contact the nearest regional EPA office (Table 3-2) for clarification.

3.4 CONFIDENTIALITY

If applicants find it necessary, or are required, to include confidential information in an application, they should refer to Sec. 270.12 ("Confidentiality of Information") in Subpart B of Part 270. Of particular note are the items in Sec. 270.12(b) that cannot be claimed as confidential.

To assert a confidentiality claim, the provisions of 40 CFR 270.12 require that the applicant attach a cover sheet, or stamp or type a notice on each page of the information, or otherwise identify the confidential portion(s) of

the application. Words like "trade secret," "confidential business information," "proprietary," or "company confidential" should be used. The notice should also state whether the applicant desires confidential treatment only until a certain date or a certain event.

Whenever possible, the applicant should separate the information contained in the application into confidential and non-confidential units and submit them under separate cover letters. Claiming confidentiality for a large portion of the permit application and failing to separate it into confidential and non-confidential units may result in a significant delay in processing because the EPA lacks the in-house resources for expeditiously isolating the confidential from the non-confidential information.

If it is necessary to send confidential information through the mail, the applicant should consider the following precautions in addition to those listed in Sec. 270.12:

1. Place the material in a sealed envelope or container and conspicuously mark the envelope or container "confidential information."

2. Place the sealed, marked envelope or container inside an outer envelope or container that is properly addressed but not marked as confidential, and seal this outer envelope or container.

3. Mail (or otherwise ship) the material with return receipt (or equivalent) requested.

The EPA is not liable for release of information that an applicant has submitted but failed to identify as confidential. (Additional information on the EPA's handling of confidential information can be found in Part 2 of Title 40 of the CFR.)

3.5 APPEALS

It is possible to appeal the contents of a final RCRA permit. The procedure for petitioning the EPA to review any condition of a permit decision is contained in 40 CFR Sec. 124.19 ("Appeal of RCRA, UIC, and PSD Permits"). In addition, EPA can decide on its own initiative to review a final permit. In either case, a petition or decision to review a final permit must be made within 30 days after a RCRA final permit decision has been made under Sec. 124.15.

4.0 WRITTEN ASSESSMENT OF TANK SYSTEMS

This chapter provides guidance on preparing the information required for a tank system assessment report and on the procedures to be used to make tank system assessments. It presents information and guidance for evaluating the technical performance of tank systems.

Section 264.191, "Assessment of existing tank system's integrity," requires that for each existing tank system that does not have secondary containment which meets the requirements of Sec. 264.193, the owner or operator must obtain and keep on file at the facility a written assessment of the tank system's integrity (i.e., that the tank is not leaking and is not unfit for use). The assessment must be reviewed and certified by an independent, qualified, registered professional engineer. An "independent" engineer is one who is not on the facility's staff. This assessment must be complete and be on file by January 12, 1988.

Section 264.192, "Design and Installation of New Tank Systems or Components," requires that owners and operators of new tank systems submit to the Environmental Protection Agency's (EPA) Regional Administrator a written assessment of the system's structural integrity and acceptability for the storage and treatment of hazardous waste. The assessment may be written by any qualified person, whether or not a registered professional engineer, but it must be reviewed and certified by a an independent, qualified, registered professional engineer. A professional engineer should come from the disciplines of civil, structural, geotechnical, or mechanical engineering and have both training and experience in tank system design and installation. More than one engineer may be required to ensure that design and installation experience are both included. It should be noted that each state controls the registration of professional engineers practicing within its borders. Thus, it is important that the engineer selected by the tank system owner or operator be registered to practice in the state in which the system is or will

be installed. In most states, registered professional engineers are required to stamp or seal the certification documents they provide and are responsible for such certifications.

At a minimum, the independent, registered professional engineer must be qualified to assess a tank system's structural integrity and usual causes of failure. The individual must be able to recognize, typically from field experience, the signs of past or imminent tank system failure. Such signs include problems with piping and other ancillary equipment (e.g., inadequate seals or valves), residues around a tank from overfills and/or leakage, and corrosion of tank system metal. Because the assessment must contain a certification of acceptability for storing hazardous wastes, the engineer must also be able to assess and interpret information on the hazardous waste contents of the tank system and their compatibility with the construction materials of the tank and lining.

4.1 TANK SYSTEM DESIGN AND TESTING

Citations

The written assessment of a tank system, required for a Resource Conservation and Recovery Act (RCRA) permit application, is defined in Sec. 270.16(a) as a written assessment reviewed and certified by an independent, qualified, registered, professional engineer which describes for each tank system its structural integrity and suitability for handling hazardous waste.

To assess the structural integrity and acceptability of an existing tank system for storing and treating hazardous waste, the owner or operator must supply the information set forth in Sec. 264.191:

(a) For each existing tank system that does not have secondary containment meeting the requirements of Sec. 264.193, the owner or operator must determine that the tank system is not leaking or is unfit for use. Except as provided in paragraph (c) of this section, the owner or operator must obtain and keep on file at the facility a written assessment reviewed and

certified by an independent, qualified registered professional engineer, in accordance with Sec. 270.11(d), that attests to the tank system's integrity by January 12, 1988.

(b) This assessment must determine that the tank system is adequately designed and has sufficient structural strength and compatibility with the waste(s) to be stored or treated, to ensure that it will not collapse, rupture, or fail. At a minimum, this assessment must consider the following:

(1) Design standard(s), if available, according to which the tank and ancillary equipment were constructed;

(2) Hazardous characteristics of the waste(s) that have been and will be handled;

(3) Existing corrosion protection measures;

(4) Documented age of the tank system, if available (otherwise, an estimate of the age); and

(5) Results of a leak test, internal inspection, or other tank integrity examination such that:

(i) For non-enterable underground tanks, the assessment must include a leak test that is capable of taking into account the effects of temperature variations, tank end deflection, vapor pockets, and high water table effects, and

(ii) For other than non-enterable underground tanks and for ancillary equipment, this assessment must include either a leak test, as described above, or other integrity examination, that is certified by an independent, qualified, registered professional engineer in accordance with Sec. 270.11(d), that addresses cracks, leaks, corrosion, and erosion.

[Note.-The practices described in the American Petroleum Institute (API) Publication, Guide for Inspection of Refinery Equipment, Chapter XIII, "Atmospheric and Low-Pressure Storage Tanks," 4th edition, 1981, may be used, where applicable, as guidelines in conducting other than a leak test.]

(c) Tank systems that store or treat materials that become hazardous wastes subsequent to July 14, 1986, must conduct this assessment within 12 months after the date that the waste becomes a hazardous waste.

(d) If, as a result of the assessment conducted in accordance with paragraph (a), a tank system is found to be leaking or unfit for use, the owner or operator must comply with the requirements of Sec. 264.196.

The owner or operator assessing the structural integrity and acceptability of a <u>new</u> tank system or components for storing and treating hazardous waste must document the following information, as stated in Sec. 264.192(a):

(1) Design standard(s) according to which tank(s) and/or the ancillary equipment are constructed;
(2) Hazard characteristics of the waste(s) to be handled;
(3) For new tank systems or components in which the external shell of a metal tank or any external metal component of the tank system will be in contact with the soil or with water, a determination by a corrosion expert of:
   (i) Factors affecting the potential for corrosion, including but not limited to:
      (A) Soil moisture content;
      (B) Soil pH;
      (C) Soil sulfides level;
      (D) Soil resistivity;
      (E) Structure to soil potential;
      (F) Influence of nearby underground metal structures (e.g., piping);
      (G) Existence of stray electric current;
      (H) Existing corrosion-protection measures (e.g., coating, cathodic protection), and
   (ii) The type and degree of external corrosion protection that are needed to ensure the integrity of the tank system during the use of the tank system or component, consisting of one or more of the following:
      (A) Corrosion-resistant materials of construction such as special alloys, fiberglass reinforced plastic, etc.;
      (B) Corrosion-resistant coating (such as epoxy, fiberglass, etc.) with cathodic protection (e.g., impressed current or sacrificial anodes); and
      (C) Electrical isolation devices such as insulating joints, flanges, etc.

      [Note.--The practices described in the National Association of Corrosion Engineers (NACE) standard, "Recommended Practice (RP-02-85)--Control of External Corrosion on Metallic Buried, Partially Buried, or Submerged Liquid Storage Systems," and the American Petroleum Institute (API) Publication 1632, "Cathodic Protection of Underground Petroleum Storage Tanks and Piping Systems," may be used, where applicable, as guidelines in providing corrosion protection for tank systems.]
(4) For underground tank system components that are likely to be adversely affected by vehicular traffic, a determination of design or operational measures that will protect the tank system against potential damage; and
(5) Design considerations to ensure that:
   (i) Tank foundations will maintain the load of a full tank;

(ii) Tank systems will be anchored to prevent flotation or dislodgment where the tank system is placed in a saturated zone, or is located within a seismic fault zone subject to the standards of Sec. 264.18(a); and

(iii) Tank systems will withstand the effects of frost heave.

(b) The owner or operator of a new tank system must ensure that proper handling procedures are adhered to in order to prevent damage to the system during installation. Prior to covering, enclosing, or placing a new tank system or component in use, an independent, qualified installation inspector or an independent, qualified, registered professional engineer, either of whom is trained and experienced in the proper installation of tank systems or component [sic], must inspect the system for the presence of any of the following items:

(1) Weld breaks;
(2) Punctures;
(3) Scrapes of protective coatings;
(4) Cracks;
(5) Corrosion;
(6) Other structural damage or inadequate construction/installation.

All discrepancies must be remedied before the tank system is covered, enclosed, or placed in use.

(c) New tank systems or components that are placed underground and that are backfilled must be provided with a backfill material that is a noncorrosive, porous, homogeneous substance and that is installed so that the backfill is placed completely around the tank and compacted to ensure that the tank and piping are fully and uniformly supported.

(d) All new tanks and ancillary equipment must be tested for tightness prior to being covered, enclosed, or placed in use. If a tank system is found not to be tight, all repairs necessary to remedy the leak(s) in the system must be performed prior to the tank system being covered, enclosed, or placed into use.

(e) Ancillary equipment must be supported and protected against physical damage and excessive stress due to settlement, vibration, expansion, or contraction.

[Note.--The piping system installation procedures described in American Petroleum Institute (API) Publication 1615 (November 1979), "Installation of Underground Petroleum Storage Systems," or ANSI Standard B31.3, "Petroleum Refinery Piping," and ANSI Standard B31.4 "Liquid Petroleum Transportation Piping System," may be used, where applicable, as guidelines for proper installation of piping systems.]

(f) The owner or operator must provide the type and degree of corrosion protection recommended by an independent corrosion expert, based on the information provided under paragraph (a)(3) of this section, or other corrosion protection if the Regional Administrator believes other corrosion protection is necessary to ensure the integrity of the tank system during use

of the tank system. The installation of a corrosion protection system that is field fabricated must be supervised by an independent corrosion expert to ensure proper installation.

(g) The owner or operator must obtain and keep on file at the facility written statements by those persons required to certify the design of the tank system and supervise the installation of the tank system in accordance with the requirements of paragraphs (b) through (f) of this section, that attest that the tank system was properly designed and installed and that repairs, pursuant to paragraphs (b) and (d) of this section, were performed. These written statements must also include the certification statement as required in Sec. 270.11(d) of this Chapter.

Guidance

A) Design Standards

Adherence to nationally accepted design standards would facilitate compliance with the structural integrity requirements of Secs. 264.191 and 264.192. Table 4-1 lists the applicable design standards for tanks. The permit applicant must demonstrate that all ancillary equipment complies with similar national design standards, such as those listed in the American National Standards Institute/American Society of Mechanical Engineers (ANSI/ASME) publication B31.3, "Chemical Plant and Petroleum Refinery Piping," (Tables 326.1 and A326.1, for metallic and non-metallic components, respectively).

The standards in Table 4-1 are updated continually. It is up to the permit applicant to demonstrate compliance with the most recent set of applicable design standards. Check with the following organizations for more information on standards:

The Aluminum Association (AA)
818 Connecticut Avenue, N.W.
Washington, D.C. 20006
(202) 862-5100

American Petroleum Institute (API)
1220 L Street, N.W.
Washington, D.C. 20005
(202) 682-8000

American Concrete Institute (ACI)
22400 West Seven Mile Road
Detroit, MI 48219
(313) 532-2600

American Society for Testing and Materials (ASTM)
1916 Race Street
Philadelphia, PA 19103
(215) 299-5400

TABLE 4-1

NATIONALLY ACCEPTED TANK DESIGN STANDARDS

Document Number	Title	Date
AA-ASD-1	Aluminum Standards and Data, 1970-71	1984
AA-ED-33	Engineering Data for Aluminum Structures	1981
AA-SAS-30	Specifications for Aluminum Structures	1982
ACI-344R-70	Design and Construction of Circular Prestressed Concrete Structures	1970
ACI-350R-77	Concrete Sanitary Engineering Structures	1983
AISI-PS-268-685-5M	Useful Information on the Design of Plate Structures	1985
AISI-TS-291-582-10M-NB	Steel Tanks for Liquid Storage	1982
ANSI B96.1	Standard for Welded Aluminum-Alloy Storage Tanks	1981
API 12B	Specification for Bolted Tanks for Storage of Production Liquids, 12th Ed.	1977
API 12D	Specification for Field Welded Tanks for Storage of Production Liquids, 8th Ed.	1982
API 12F	Specification for Shop Welded Tanks for Storage of Production Liquids, 7th Ed.	1982
API 620	Recommended Rules for Design and Construction of Large, Welded, Low-Pressure Storage Tanks	1982
API 650	Welded Steel Tanks for Oil Storage	1984
ASME BPV-VIII-1	ASME Boiler and Pressure Vessel Code	1980
ASTM D 3299	Standard Specification for Filament-Wound Glass-Fiber Reinforced Thermoset Resin Chemical Resistant Tanks	1981
ASTM D 4021	Standard Specification for Glass-Fiber Reinforced Polyester Underground Petroleum Storage Tanks	1981

Continued on next page.

Table 4-1--Continued

Document Number	Title	Date
AWWA-D100	Standard for Welded Steel Tanks for Water Storage	1984
NFPA 30	Flammable and Combustible Liquids Code	1984
UL 58	Standard for Steel Underground Tanks for Flammable and Combustible Liquids	1976
UL 80	Standard for Steel Inside Tanks for Oil Burner Fuel	1980
UL 142	Standard for Steel Aboveground Tanks for Flammable and Combustible Liquids	1981
UL 1316	Standard for Glass-Fiber-Reinforced Plastic Underground Storage Tanks for Petroleum Products	1983

American Iron and Steel Institute (AISI)
1000 Sixteenth Street, N.W.
Washington, D.C. 20036
(202) 452-7190

American Society of Mechanical Engineers (ASME)
Publications
22 Law Drive
Fairfield, NJ 07007
(201) 882-1167

American National Standards Institute, Inc. (ANSI)
1430 Broadway
New York, NY 10018
(212) 354-3300

American Water Works Association (AWWA)
6666 West Quincy Avenue
Denver, CO 80235
(303) 794-7711

National Fire Protection Association (NFPA)
Batterymarch Park
Quincy, MA 02269
Publications: (800) 344-3555

Underwriters Laboratories, Inc. (UL)
333 Pfingsten Road
Northbrook, IL 60062
(312) 272-8800

For any nonspecification tank system (i.e., one that does not comply with the applicable design standards listed in Table 4-1), the owner or operator must demonstrate that: 1) the system is constructed in accordance with sound engineering principles and may safely contain hazardous waste; and 2) the tank has the dimensions and thickness necessary to contain its contents for a given service life. The calculations must account for internal liquid pressure, internal vapor pressure, hydrostatic pressure, vehicle loading, and the tank shell thickness-reducing effect of corrosion (i.e., tank thickness must include a "corrosion allowance," if applicable). It is desirable for all new tanks to be provided with a means of entry (e.g., a manway) to make internal inspections easier.

Bottom Pressure. Bottom pressure is defined as liquid height multiplied by liquid density. Tank internal vapor pressure is the difference between atmospheric pressure and the pressure in a tank. A tank designed for contents with a particular density should not be filled with a material of a greater density. In cases where it is necessary to store a heavier waste than a tank was designed for, calculations should be performed to determine the maximum fill height that can be used without encountering excessive bottom pressure. American Petroleum Institute

(API) Standards 620 and 650, "Recommended Rules for Design and Construction of Large, Welded, Low-Pressure Storage Tanks" (1982) and "Welded Steel Tanks for Oil Storage" (1980), respectively, provide extensive information on design calculations. The American Society of Mechanical Engineers (ASME) "Boiler and Pressure Vessel Code" (1980) also provides guidelines on tank design.

Tank Wall Thickness. Using established performance standards or, in their absence, best engineering judgment, the owner or operator must determine whether a tank has an adequate margin of safety for tank thickness. Tanks designed according to standards or codes often have inherent theoretical safety factors in the range of three to five. The engineer should remember that underground, fiberglass-reinforced plastic (FRP) tank designs require that backfill provide much (up to 90 percent) of the tank's structural support. Uniform backfill support is also important for underground steel tanks.

The Steel Tank Institute has developed guidelines for the design and construction of steel double-walled tanks, entitled "Standard for Dual Wall Underground Steel Storage Tanks" (1984). A similar guideline has not been developed, however, for FRP double-walled tanks. Manufacturers' data and/or UL design approval will have to be used to convince the EPA of the structural integrity of such a tank. (Underwriters Laboratories, Inc., is currently in the process of developing double-walled tank standards for both steel tanks and FRP tanks which are to be referred to as "UL-listed Secondary Containment Tanks".)

Venting. Tank venting must be shown to be adequate. The vapor pressure within a tank must either be maintained at atmospheric pressure or within the pressure limitation of the tank design. Normal vents are needed for atmospheric and low-pressure tanks that are not constructed to handle excessive pressure or vacuum buildup. High-pressure tanks require emergency vents. Venting capacities are based on maximum emptying, filling, thermal inbreathing, and outbreathing rates.

Venting can be accomplished under normal operating conditions with open vents, pressure-vacuum valves, pressure-relief valves, and pilot-operated relief valves. Each valve type is designed for specific physical characteristics of the tank's contents. Pressure-vacuum valves are designed for atmospheric storage tanks containing low-boiling point liquids. Pressure-relief valves are used chiefly for liquid storage and generally should not be used for gas or vapor service. Rupture discs and resilient valve seats are often used in conjunction with pressure-relief valves for storage of corrosive, viscous, and polymerizable liquids that can damage valves. Pilot-operated valves are generally used when the relief pressure is near the operating pressure, and in low-pressure tanks, but not in tank systems with viscous liquids or liquids with vapors that can polymerize.

Floating roof tanks also prevent vapor buildup. For emergency venting, a tank may have a roof-to-shell weld attachment designed for early failure during pressure buildup, larger or additional normal vents and/or gauge hatches, or manhole covers that open at a designated pressure.

Vent sizes should be determined according to standards such as API Standard 2000, "Venting Atmospheric and Low Pressure Storage Tanks" (1982). National Fire Protection Association (NFPA) Standard 30, "Flammable and Combustible Liquids Code" (1984) also provides vent design information. Vent piping for an underground tank should extend several feet above ground level to prevent fumes from concentrating near the ground. Such piping should be a minimum of two feet higher than adjacent buildings. Rain caps on vent piping are advisable.

Ancillary Equipment. Nonspecification tank system appurtenances also must have the appropriate strength to handle the maximum internal stresses expected. The owner or operator must assess the ability of a tank system's ancillary equipment, including piping, flanges, valves, fittings, pumps, etc., to handle the waste materials (liquid, slurry, or vapor) in the volumes expected. Any manufacturer's test results demonstrating the strength of a particular tank system component will

help convince the EPA of the system's structural integrity. In other words, the owner or operator should be able to demonstrate that the maximum stress (taking into consideration ambient temperature and pressure) to which a component will be exposed is less than the manufacturer's maximum allowable design stress, including an adequate safety factor.

B) Characteristics of Waste

The owner or operator must assess the "hazard characteristics of the waste(s)" and the ability of a tank system to handle such waste(s). The EPA interprets this statement in Secs. 264.191 and 264.192 to mean that a tank system must be compatible with its contained waste, mixture of wastes or treatment reagents. Thus, any portion of a tank system (e.g., tank lining, tank outer shell, piping, valves, fittings, pumps) that comes into contact with waste must not deteriorate in the waste's presence. Linings are often added to a tank to ensure the compatibility of the waste with the tank.

The owner or operator of a tank system must obtain a detailed chemical analysis of the contained waste. The owner or operator must use this analysis and knowledge of the ignitability, corrosivity, reactivity, and EP toxicity of a waste stream to determine if the stream is compatible with its tank system. Table 4-2 describes the impact of these factors on tank design. To convince the EPA of the compatibility of stored waste(s) and containers, data may be used from the "Chemical Engineers' Handbook," the National Association of Corrosion Engineers (NACE), facility tests, and manufacturers. (See Section 13.0 of this document for more information on waste compatibility.)

Table 4-3 presents the compatibility of common tank construction materials with various chemicals. Generally, the assessment of compatibility for the purposes of Table 4-3 was conservative, e.g., the internal corrosion rate for metals had to be less than 2/1000 inches per

TABLE 4-2

IMPACT OF SELECTED WASTE PROPERTIES ON TANK DESIGN

Waste Property	Impact on Tank Design
Ignitability	Generally, steel or FRP are used for the tank, and the tank must have a closed top or must provide a means to prevent sparks or fire from contacting the ignitable liquid or vapor.
Corrosiveness	A material of construction for the tank must be selected that has a low corrosion rate, or an effective lining or coating material must be used that is compatible with the waste and operating conditions.
Reactivity	None, unless reactive with carbon dioxide in the air, in which case the tank should have a closed top to prevent reactions.
EP Toxicity	Tank should generally have a closed top (unless toxic components are not volatile or components are of low volatility and are not toxic at low concentrations).

Source: "Permit Writer's Guidance Manual for Hazardous Waste Tanks" (undated draft), U.S. Environmental Protection Agency, EPA Contract No. 68-01-6515, pp. 3-7.

TABLE 4-3

COMPATIBILITY OF MATERIALS OF CONSTRUCTION WITH VARIOUS CHEMICALS

Material	Compatible With	Incompatible With
Minerals		
Sulfuric acid(1)	FRP(2) Mild Steel Rubber-lined	Concrete (10%)
Hydrochloric acid(3)	FRP	Mild steel concrete, including steel at 10%-37% hydrochloric acid
Nitric acid	FRP(4)	Mild steel concrete, with 2% and 40% Nitric acid
Phosphoric acid	FRP Concrete--slow disintegration at 10% phosphoric acid	Mild steel
Organic Acids		
Acetic acid	FRP	Mild steel
Bases		
Sodium hydroxide	FRP Mild steel(5) Concrete (10%)	Mild steel(5)
Ammonium hydroxide	Mild steel(5) FRP(6) Concrete	Mild steel(5)

Sources: "Permit Writer's Guidance Manual for Hazardous Waste Tanks", U.S. Environmental Protection Agency, EPA Contract 68-01-6515 (undated draft), pp. B-5 through B-8.

"Effects of Substances on Concrete and Guide to Protective Treatments," Portland Cement Association (1981), pp. 7-11.

Footnotes at end of table.

Continued on next page.

TABLE 4-3--Continued

Material	Compatible With	Incompatible With
Aqueous Salts		
Calcium chloride	FRP Concrete (If concrete is alternately wet and dry with the solution, then calcium chloride can induce slow disintegration).	Mild steel[7]
Sodium sulfate	FRP Concrete--disintegration of concrete with inadequate sulfate resistance. Concrete products cured in high-pressure steam are highly resistant to sulfates.	Mild steel
Copper sulfate	FRP Concrete--slow distintegration	Mild steel
Ferric chloride	FRP Concrete--slow disintegration	Mild steel
Sodium hypochloride	Special metal alloys	Mild steel
Stannous chloride	Noble metals Stainless steel to 50%	FRP
Sodium chloride	FRP Concrete--unless concrete is alternately wet and dry with the solution.	Mild steel

Footnotes at end of table.

Continued on next page.

TABLE 4-3--Continued

Material	Compatible With	Incompatible With
Aqueous Salts (Continued)		
Alum	FRP Concrete--disintegration of concrete with inadequate sulfate resistance. Concrete products cured in high-pressure steam are highly resistant to sulfates.	Mild steel
Solvents		
Perchloroethylene	FRP(8) Concrete(9)	Mild steel
Carbon tetrachloride	FRP(10) Concrete(9)	Mild steel
Ethyl alcohol (11)	Mild steel Concrete	Stainless steel
Methyl ethyl ketone	FRP(12) Concrete	Mild steel (13)
Acetone	FRP(14) Concrete; however, acetone may contain acetic acid as impurity.	Mild steel(15)
Miscellaneous		
Benzene	FRP(16) Concrete	Mild steel
Hexane	Mild steel(17)	FRP
Aniline	Stainless steel(18)	FRP Mild steel

Footnotes at end of table.

Continued on next page.

Table 4-3--Continued

Material	Compatible With	Incompatible With
Miscellaneous (Continued)		
Nitrobenzene	FRP(19) Mild steel	 FRP
Phenol	Mild steel Stainless steel Concrete--slow disintegration	
Chlorobenzene	Mild steel Stainless steel	
Naphthalene	Mild steel(20)	FRP(21)
Benzoic acid	Special metals (nickel-base alloys)	Mild steel
Diethyl amine	Mild steel(22)	
Formaldehyde	FRP Stainless steel Concrete--Slow disintegration due to formic acid formed in solution	Mild steel

NOTES:

(1) Needs the attention of a corrosion specialist. FRP is good up to 70% concentration. Mild steel (M.S.) is good for concentrations from 93% to 98%.

(2) Fiberglass-reinforced plastics (FRP) have been considered here. However, there are fiberglass-reinforced epoxy resins available that are not considered in this table.

Continued on next page.

Table 4-3--Continued

NOTES:

(3) FRP is good to 30% concentration. No organic solvents should be present. The National Association of Corrosion Engineers (NACE), Houston, TX, has a graph for the compatibility of various metals for HCl use.

(4) FRP is good to 15% concentration.

(5) M.S. is good only to 25°C. 316 stainless steel (S.S.) is recommended for service conditions about 25°C.

(6) FRP is good to about 50% concentration.

(7) M.S. is incompatible after about 5% concentration at 100°C.

(8) FRP is good to about 25°C.

(9) Impervious concrete is required to prevent loss from penetration, and surface treatments are generally used.

(10) FRP is good to about 125°C.

(11) FRP is good for 95% concentration and 21° to 66°C.

(12) FRP is good from 10° to 35°C.

(13) M.S. is incompatible for concentrations below 100%.

(14) FRP is good for 10% concentration and 21° to 79.5°C.

(15) M.S. is incompatible for concentrations below 100%.

(16) FRP is good from 10° to 32°C.

(17) M.S. is good for 100% solvent to 100°C.

(18) S.S. is good to 100% concentration.

(19) FRP is good for 5% concentration and 21° to 52°C.

(20) M.S. is good to 100% concentration.

(21) FRP is good for only 100% concentration and 21° to 27°C; therefore, it is listed as incompatible.

(22) M.S. is good only at 100% concentration and up to 100°C.

year. This table is, however, just a guideline to waste/construction material compatibility, and the EPA Regional Administrator may require additional evidence of compatibility.

Underground concrete tanks may require internal surface protection for hazardous wastes that tend to disintegrate concrete slowly. The type of protection that should be used against chemical attack will vary according to the kind and concentration of the chemical, frequency of contact, and physical conditions, such as temperature, pressure, mechanical wear or abrasion, and freeze-thaw cycles. For more specific information on concrete/waste compatibility, see the Portland Cement Association's "Effects of Substances on Concrete and Guide to Protective Treatments" (1981). Where conditions may cause deterioration of the concrete around the reinforcing steel, a method for the direct protection of the steel may be desirable (See American Society for Testing and Materials (ASTM) publication number A775).

Many types of protective coatings or barriers will prevent contact with the concrete surfaces. To be successful, any such coating must exhibit good adhesion to the concrete and must be completely impervious. For example, various thermoplastic and thermosetting coatings, ceramics, chemical-resistant mortars, sheet or liner materials, and composite barriers have these characteristics. If conditions are severe enough to deteriorate good quality concrete, it is difficult to provide complete and lasting protection. Consideration should be given to neutralizing severely aggressive liquid wastes.

When special protection is required for the reinforcing bars, epoxy-coated bars, which should conform to ASTM A775, are preferable.

Although FRP tanks are generally referred to in a way that denotes a single type of storage tank, they actually can be fabricated from a wide variety of plastic resins. The selection of resin depends upon the material to be contained and the conditions of storage. Most FRP tanks now in use are constructed from isophthalic polyester resin. Because the

- resins used for FRPs can change with exposure to stored wastes, it is imprudent to reuse an FRP tank of unknown origin and age, unless the prior use of the tank is known and the tank manufacturer is consulted on the compatibility of the tank resin with the new stored waste.

C) Corrosion Protection Measures

For existing tank systems and components, Sec. 264.191(b) requires that the assessment must consider the existing corrosion protection measures. Guidance for such an assessment is described in detail in Section 5.4.1 of this document, "Corrosion Potential Assessment."

D) Documented Age of the Tank System

If available, the assessment must include the documented age of the tank system, including the age of any replacement components. If such documentation is unavailable, an estimate of the age should be made and a brief discussion of the reasoning behind it should also be included in the assessment.

E) Leak-tests, Inspections, and Other Examinations

Sections 264.191(b)(5) and 264.192(d) require the results of a leak test, an internal inspection, or other tank integrity examination for existing aboveground or enterable tanks. For non-enterable, underground tanks, the assessment must include a leak test that is capable of taking into account the effects of temperature variations, tank end deflection, vapor pockets, and high water table effects. For other than non-enterable underground tanks and for ancillary equipment, the assessment must include either a leak test or other integrity examination that is certified by an independent, qualified, registered professional engineer that addresses cracks, leaks, corrosion, and erosion. It is the EPA's intent that operators and owners select a leak-testing technology that is consistent with state-of-the-art engineering practices and leak-detection accuracy limits. Section 264.191 requires that an independent,

qualified, registered professional engineer review and certify all such tank and piping leak-tests and any other inspections and examinations to ensure that all methods chosen and implemented are consistent with state-of-the-art test methodology and current leak-detection accuracy limits.

The EPA is currently involved in a research effort to evaluate the effectiveness of different leak-testing technologies. A preliminary report, entitled "Underground Tank Leak Detection Methods: A State-of-the-Art Review," has recently been published by the EPA's Hazardous Waste Engineering Research Laboratory, Contract No. 68-03-3069, Cincinnati, Ohio, (June 1985). This report describes both commercially available and developing techniques for detecting leaks in underground storage tanks. The report includes information on variables affecting leak-detection methods and describes 36 different test methods covering volumetric and nonvolumetric leak-detection techniques, inventory-control monitoring methods, and techniques to determine the effects of leaks. The individual descriptions discuss operating principles, means for compensating the effects of test variables, and limits on applicability and accuracy. (See Table 4-4.) EPA in the future will publish additional information and guidance on leak testing, including evaluations of test methods.

The owner or operator should carefully choose the leak-testing method to be used after consulting with a qualified, independent, registered professional engineer who will review and certify the written assessment. The test method must be chosen with regard to accuracy and safety. Some hazardous waste may be incompatible with some test equipment, and some waste may create hazards for the persons conducting the test. The owner or operator may require outside, qualified, experienced assistance to conduct leak-tests that are as accurate as the state of the art will allow and are in conformance with good safety practices.

TABLE 4-4

GENERAL INFORMATION ON LEAK TESTING DEVICES

Method	Principle	Claimed Accuracy (gal/hr)	Tank Prepartion
	Volumetric Measures		
Ainlay Tank Tegrity Testing	• Pressure measurement by a coil type manometer, determine product level change in a propane bubbling system	• 0.02	Fill a tank the evening before a test
ARCO HTC Underground Tank Leak Detector	• Level change measurement by float and light sensing system	• 0.05	Adjust the level at 66-76 percent
Certi-Tec Testing	• Monitors pressure changes resulting from product level changes	• 0.05	None
"Ethyl" Tank Sentry	• Level change magnification by a "J" tube manometer	• Sensitive to 0.02 inches level change	No deliveries 24 hours prior to a test
EZY-CHEK Leak Detector	• Pressure measurement, determine product level change in an air bubbling system	• Less than 0.01 • Less than 0.01	Fill up four hours prior to a test, usually test at night
Fluid-Static (Standpipe) Testing	• Pressurize a system by a standpipe • Keep the level constant by product addition or removal • Measure rate of volume change	• Gross	Fill the tank prior to a test
Heath Petro Tite Tank and Line Testing (Kent-Moore)	• Pressurize a system by a standpipe • Keep the level constant by product addition or removal • Measure volume change • Product circulation by pump	• Less than 0.05	Fill the tank prior to a test
Helium Differential Pressure Testing	• Leak detection by differential pressure change in an empty tank • Leak rate estimation by Bernoulli's equation	• Less than 0.05	Seal the ports to the atmosphere, empty the tank

TABLE 4-4 (Continued)

GENERAL INFORMATION ON LEAK TESTING DEVICES

Method	Principle	Claimed Accuracy (gal/hr)	Tank Prepartion
	Volumetric Measures		
Leak Lokator Test Hunter-Formerly Sunmark Leak Detection	• "Principle of Bouyancy" - The apparent loss in weight of any object submerged in weight of the displaced volume of liquid	• 0.05 even at product level at the center of a tank	Typically fill the tank before testing (if it is possible to fill a tank by the product)
Mooney Tank Test Detector	• Level change measurement with a dip	• 0.02	Fill the tank 12-14 hours prior to a test
PACE Tank Tester	• Magnification of pressure change in a sealed tank by using a tube and based on manometer principle	• Less than 0.05	Fill the tank 12 hours prior to a test Seal all the ports except fill pipe
PALD-2 Leak Detector	• Pressurize system with nitrogen at three different pressures • Level measurement by an electro-optical device • Estimate leak create based on the size of leak and pressure difference across the leak	• Less than 0.05	Fill the tank 24 hours prior to a test. All ports must be hermetically sealed
Pneumatic Testing	• Pressurize system with air or other gas • Leak rate measurement by change in pressure	• Gross	Seal the ports
Tank Auditor	• "Principle of Bouyancy"	• 0.00001 in the fill pipe, 0.03 at the center of 10.5-foot diameter tank	None
Two-Tube Laser Interferometer System	• Level change measurement by laser beam and its reflection	• Less than 0.05	None

TABLE 4-4 (Continued)

GENERAL INFORMATION ON LEAK TESTING DEVICES

Method	Principle	Claimed Accuracy (gal/hr)	Tank Preparation
Non-Volumetric Measure			
Acoustical Monitoring System (AMS)	• Sound detection of vibration and elastic waves generated by a leak in a pressurized system by nitrogen • Triangulation technique to detect leak location	• Does not provide leak rate • Detect leak as low as 0.01 gallons per hour	Seal all ports prior to a test
Leybold-Heraeus Helium Detector, Ultratest M2	• Rapid diffusivity of helium • Mix a trace gas with products at the bottom of the tank • Detect helium by a sniffer mass spectrometer	• Does not provide lead rate • Helium could leak through 0.005 inches leak size (38)	Seal all ports prior to a test Monitoring holes
Smith & Denison Helium Test	• Rapid diffusivity of helium • Differential pressure measurement • Helium detection outside a tank	• Provide the maximum possible leak based on the size of the tank (does not provide leak rate) Helium could leak through 0.005 inches leak sizes (38)	Seal all ports Monitoring holes
TRC Rapid Leak Detector for Underground Tanks and Pipes	• Rapid diffusion of tracer gas • Mix a tracer gas with product • Detect tracer gas by a sniffer mass spectrometer using a vacuum pump	• Does not provide leak rate	Seal all ports prior Monitoring holes Tracer gas with product through 0.005 inches size (38)

TABLE 4-4 (Continued)

GENERAL INFORMATION ON LEAK TESTING DEVICES

Method	Principle	Claimed Accuracy (gal/hr)	Tank Preparation
	Non-Volumetric Measure		
Ultrasonic Leak Detector (Ultrasound)	• Vacuum the system (5 psi) • Scanning entire tank wall by Ultrasound device • Note the sound due to leak by headphones and register on a meter	• Does not provide the leak rate • A leak as low as 0.001 per hour of air could be detected • A leak through 0.005 inches could be detected	Seal all ports Empty the tank
VacuTect (Tanknology)	• Vacuum application at higher than product static head • Detect bubbling noise by hydrophone • Estimate approximate leak rate by experience	• Provide approximate leak rate	Seal all ports
Varian Leak Detector (SPY20000 or 938-41)	• Similar to Smith & Denison	• Similar to Smith & Denison	Seal all ports Monitoring holes

Source: "Underground Tank Leak Detection Methods: A State of the Art Review, "Environmental Protection Agency, Hazardous Waste Engineering Research Laboratory, Cincinnati, Ohio

The selection of a leak-testing device must consider how its design accounts for volume changes in tank contents caused by the following factors:

- Temperature changes during testing and temperature gradients within a tank or piping;
- A high water table causing ingress of water;
- Tank end deflection caused by increased pressure in a tank during testing;
- Evaporation losses; and
- Volume changes of trapped air and vapor pockets in a tank and piping.

Some of the above factors can contribute potentially large errors to leak-testing measurements; hence, they must be minimized or eliminated by the design of a leak-testing system. A discussion of each of these factors follows.

1) TEMPERATURE

The liquid or sludge content of a tank generally will expand in size with increased temperature and contract with decreased temperature, to a greater or lesser extent depending on composition. For example, the coefficient of expansion per degree Fahrenheit for a predominantly benzene waste is 0.00071 (see Table 4-5). That is, in a 10,000-gallon benzene waste tank, a volume change of 7.1 gallons will be observed with an overall 1°F temperature change. Thus, in a 10,000-gallon benzene waste tank, it is necessary to maintain or measure the tank temperature to approximately 1/100 of a degree (Fahrenheit) over a one-hour period to measure a 0.05 gallon hourly leakage rate. The necessity for minimizing temperature changes is the reason why underground tanks can be leak-tested with more accuracy than aboveground or inground tanks. If a leak-testing device compensates for temperature changes using the coefficient of expansion of the tank contents, the tester must ascertain accurately

Table 4-5

THERMAL EXPANSION OF LIQUIDS

Liquid	Volumetric Coefficient of Expansion (per Degree F)
Acetone	0.00085
Amyl acetate	0.00068
Benzol (benzene)	0.00071
Carbon disulfide	0.00070
Diesel fuel	0.00045
Ethyl alcohol	0.00062
Ethyl ether	0.00098
Ethyl acetate	0.00079
Fuel Oil #1	0.00049
Fuel Oil #2	0.00046
Fuel Oil #3	0.0004
GASOHOL	
.10 Ethyl + .90 Gasoline	0.000674
.10 Methyl + .90 Gasoline	0.000684
Gasoline	0.0006 - 0.00068
Hexane	0.00072
Jet fuel (FP 4)	0.00056
Kerosene	0.00049
Methyl alcohol	0.00072
Stove oil	0.00049
Toluol (toluene)	0.00063
Water at 68°F	0.000115

Source: Health Consultants, Inc., "Procedures Manual for the Operation of the Petro-tite Tank Tester," Stoughton, MA 1983.

Note.--These are average values and may vary. It is necessary to use the appropriate API hydrometer in order to obtain the proper coefficient of expansion.

what material the tank contains, including the respective volumetric percentages of a mixture of materials. Waste layering in a tank (because of immiscibility) can also affect leak-test measurements.

The temperature layering in an underground tank produces another leak-testing measurement difficulty. Underground tanks can have numerous temperature layers, since they are never in perfect equilibrium with the surrounding environment and their interiors are never entirely equilibrated. Hot days and cold nights can alter external tank temperatures, and additionally, convection currents inside cause warmer contents to rise to the tops of tanks, while colder contents move downward. There is no such thing as a single "tank temperature." The properties of tank contents that determine the overall temperature effects (expansion, contraction, temperature layer gradients) are the coefficient of expansion with temperature, the heat conduction capability, and the viscosity (related to settling time following a disturbance).

2) WATER TABLE

A high water table (i.e., one from which water can enter an underground tank) can cause a state of hydrostatic equilibrium, whereby there is no net flow from the tank, though there may be holes in the tank. Leak-detection devices must account for this apparent absence of leakage through detection of water ingress.

3) TANK END DEFLECTION

If a leak test increases the hydrostatic pressure within a tank, the tank ends will deflect, i.e., bulge outward with the increased pressure (see Table 4-6). The rate of tank capacity increase, however, slows over time. This fact can be used to extrapolate when tank end deflection has slowed enough so that it will not cause a significant error in a leak-test measurement.

TABLE 4-6

TOTAL FORCE ON TANK ENDS

Tank Diameter	Total Force in Tons at: 1 Psi	2 Psi	3 Psi	4 Psi	5 Psi
48"	0.9	1.8	2.7	3.6	4.5
64"	1.6	3.2	4.8	6.4	8.0
72"	2.0	4.0	6.0	8.0	10.0
84"	2.8	5.6	8.4	11.2	14.0
96"	3.6	7.2	10.8	14.4	18.0

Source: Health Consultants, Inc., "Procedures Manual for the Operation of the Petro-tite Tank Tester", Stoughton, MA.

NOTE.--Force = Area x Pressure (lbs./sq. in.).

4) EVAPORATION

During the test period, volume changes caused by evaporation must be compensated for in leak-test calculations. Evaporation and condensation rates are enhanced by mixing additional product (a necessary step for some leak-testing systems) with product already in a tank at a different temperature.

5) TRAPPED AIR AND VAPOR POCKETS

If a tank is filled for testing purposes, the tank and its piping may contain an unknown amount of air. This air can compress and expand readily with pressure changes, causing apparent volume changes. Additionally, a tank content's mass and the spring-like effect of any trapped air can produce an oscillation. (Grundmann, Werner, "PALD-2 Underground Tank Leak Detector and Observation of the Behavior of Underground Tanks," study presented at the Underground Tank Testing Symposium, May 25-26, 1982, Petroleum Association for the Conservation of the Canadian Environment, Ottawa, Canada, p. 17.) The oscillation can be initiated by ground motion, such as from traffic, and by adding waste to a tank.

Vapor pockets form in three ways:

- At the high ends of a tank when the tank is not perfectly level;
- When vapor is trapped in the top of a manway; and
- When vapor is trapped at the top of a drop tube.

If a vapor pocket is released to the atmosphere when it expands because of decreased barometric pressure or increased temperature, a sensor-measuring liquid-level will record a drop if liquid fills the pockets. Similarly, if a vapor pocket is compressed because of

increased barometric pressure or decreased temperature, the liquid-level will appear to rise.

6) SLUDGE

The presence of sludge on the bottom of a tank can seal over a failure in the vessel and hide a leak. Because the sludge is not an integral component of the tank, it is not expected to continue to seal the leak. In addition, sludge may lead to inaccurate readings in some leak-testing designs. With proper cleaning and safety procedures, a sludge layer can be removed.

F) Internal Inspections

For existing enterable tank systems, an internal inspection is an alternative to leak-testing, according to Sec. 264.191(b)(5)(ii). It is often appropriate to coordinate this inspection with the time when a tank system is taken out of use for routine preventive maintenance. API's "Guide for Inspection of Refinery Equipment" (particularly chapters X-XIII and XV-XVI) is a useful reference for tank system inspection.

An internal visual inspection of a tank may be carried out by an independent, qualified, registered professional engineer to detect potential sources of leakage, such as corroded, cracked, or broken equipment. The internal inspection involves two major phases--cleaning the tank and performing the actual inspection. Guidance for conducting internal inspections is given below.

1) PREPARATION FOR INTERNAL INSPECTION--TANK CLEANING

Prior to an internal inspection, tanks must be emptied and cleaned. A general overview of proper tank-cleaning procedures is presented here and is summarized from Section 5 of "Toxic Substances Storage Tank Containment Assurance and Safety Program Guide and Procedures Manual," Maryland Department of Health & Mental Hygiene (1983).

[For more detailed procedural information, see API Publication 2015, "Cleaning Petroleum Storage Tanks" (September 1985); API 2015A, "A Guide for Controlling the Lead Hazard Associated with Tank Entry and Cleaning" (1982); API 2015B, "Cleaning Open-Top and Covered Floating-Roof Tanks" (1981); NIOSH, No. 80-106, "Working In Confined Spaces" (December 1979); and NFPA Standard 327, "Cleaning and Safeguarding Small Tanks and Containers (1982)."]

Tank cleaning can be an extremely dangerous task if not performed carefully and correctly. Fire, explosion, oxygen deficiency and poisoning may result from improper removal of even very small quantities of solid, liquid, or gaseous remnants of hazardous constituents from tanks. Therefore, particular attention should be given to ventilation and sludge removal in the tank-cleaning process.

The first major task in this process involves external inspection of the tank and preliminary inspection of tank-cleaning equipment. Next the dike area should be freed of volatile or toxic materials. The tank then can be emptied of its contents. Pumping and floating with water is the most commonly used procedure for tank emptying. All tank lines should be disconnected and emptied as well. When all liquid and solid contents have been removed from the tank and its tank lines and transferred to a suitable temporary storage space, vapors then must be flushed from the tank. Steaming, ventilating with air or an inert gas, or removing with water are all viable methods for vapor removal. Most important in the vapor removal process is using a method which is compatible with the chemical that was stored. To make certain that a tank has been completely purged of vapors, the tank should be tested for contents of oxygen, hydrocarbon vapors, and toxic gases. The combustible gas and oxygen meter should be used. These meters can also be used to determine if there is an adequate oxygen supply.

Tank Cleaning Without Entry. After the aforementioned steps have been performed in the order discussed and the tank is temporarily vapor free, tank cleaning from the outside of the tank may begin. Remaining manway covers, riveted door sheets, or bolted cleanout cover plates may be removed. A water hose pointing inward from the tank shell may be used to loosen excess sludge and float it to a water-pump connection. For a system which has contained ignitable wastes, all nozzles should be electrically bonded to tank shells during use. All lighting and electrical equipment used inside or near the tanks should be intrinsically safe or grounded to prevent sparks. Maintenance of adequate ventilation at shell manways during this process is essential. Vapor concentration should not rise above 50 percent of the lower flammable limit. If the level does rise above 50 percent, washing should be stopped until a safe level of concentration is re-established.

Pumping equipment used for the removal of sludge and excess water from tanks should be carefully selected. Equipment driven by air, steam, or an approved electrical drive is preferred. (When it is necessary to resort to open type, electric power or gasoline-driven pumping equipment, see API 2015, "Cleaning Petroleum Storage Tanks," for specifics.)

Steam treatment is the most convenient method for cleaning without entry. After 10 minutes of steaming, the tank should be washed with hot water to remove solid debris.

Chemical cleaning may be an alternative, should steaming prove inadequate. When using hot chemical cleaning solutions, temperatures of 170°F to 190°F should be maintained. Chemical solutions should only be used after determining their compatibility with the tank material.

Tank Cleaning With Entry. Safe conditions must exist in the tank before entering it for cleaning. Prior to work, the interior of the tank should be inspected for physical hazards, such as loose rafters, angle irons, or columns. Oxygen and combustible gas readings should be taken at frequent intervals while work is being performed in the tank to avoid exposure to hazardous vapors.

Three classes of atmospheric hazards in tanks must also be considered: 1) inadequate oxygen; 2) flammable gases; or 3) toxic gases. To minimize the possibility of explosion, tanks must not be entered until flammable vapors are shown to be less than 20 percent of the lower explosive limit. After meeting this condition, oxygen must be shown to be equal to or greater than 19.5 percent of the tank atmosphere. If the oxygen is less than 19.5 percent, an air supply (full-face, pressure demand) must be used. This level of respiratory protection will also guard against exposures to toxic gases. If a tank is to be entered without a full-face, pressure-demand air supply, then the concentrations of toxic gases must be known and not exceed acceptable levels, as defined by either the Occupational Safety and Health Administration (OSHA), 29 CFR 1910 or The American Conference of Governmental Industrial Hygenists (6500 Gleway Avenue, Cincinnati, OH 45211; (513) 661-7881).

2) INTERNAL INSPECTION

The second phase of the internal inspection is the actual performance of the inspection. Internal preliminary visual inspection, inspection of roof and structural members, tank shells and tank bottoms should all be integral parts of a complete internal inspection program. See Table 4-7 for tank features that should be investigated in an internal inspection. Table 4-7 also lists advanced inspection techniques that may be used. This table and the discussion which follows refer primarily to steel or fiberglass tanks. Guidance on the inspection of concrete tanks is included at the end of this section.

TABLE 4-7

CHECKLIST FOR TANK INTERNAL INSPECTION
(Tank Out of Service)

Solid Steel Tanks

(1) Roof and Structural Supports (visual first for safety)
- -- no hazards of falling objects
- -- corrosion

(2) Roof and Structural Supports (more rigorous)
- -- loss of metal thickness
- -- cracks, leaks at welds
- -- cracks at nozzle connections
- -- malfunctioning of floating roof seals
- -- water drain system deterioration
- -- hammer testing, if necessary

(3) Tank Shell
- -- cracks at seams
- -- corrosion of vapor space and liquid-level line
- -- cracking of plate joints
- -- cracking of nozzle connection joints
- -- loss of metal thickness

(4) Tank Bottom
- -- corrosion pits
- -- cracked seams
- -- rivets for tightness and corrosion
- -- depressions in bottom areas around or under roof and pipe supports
- -- bottom thickness
- -- uneveness of bottom
- -- hammer testing and bottom sampling, if necessary
- -- general condition of liner (holes, cracks, gaps, corrosion, erosion, swelling, hardness, loss of thickness)
- -- bulges, blistering, or spalling
- -- spark testing of rubber, glass, and organic type coatings
- -- ultrasonic examination of steel outer shell thickness, if possible, if any deterioration is suspected.

Source: "Permit Writer's Guidance Manual for Hazardous Waste Tanks," U.S. Environmental Protection Agency, EPA Contract 68-01-6515 (undated draft), pp. 8-10 and 8-11.

Continued on next page.

TABLE 4-7--Continued

Lined Steel Tanks*

(1) General condition of lining
--holes
--cracks
--gaps
--corrosion
--swelling
--hardness
--loss of thickness

(2) Proper positioning of liner

Fiberglass-reinforced-plastic Tanks

- softening, identations, cracks, exposed fibers, crazing, checking, lack of surface resin, and delamination
- sufficiently translucent, discolored, porous, air or other bubbles visible, other inclusions, and thin areas
- hardness testing of specimens exposed to liquid contents
- ultrasonic examination of laminate thickness, if possible, if any deterioration is suspected in the polyester matrix.

*Tanks may be lined with alloy steel, lead, rubber, glass, coatings, or concrete. The inspection procedures and locations noted for solid steel tanks are equally applicable to lined tanks.

The types of corrosion that may occur in a non-uniform way on the surface of the tank metal are: stress corrosion around weld seams; corrosion at the liquid-vapor interface; oxidative corrosion due to the presence of oxygen (from the air) in the vapor space of vented atmospheric tanks; caustic embrittlement; and hydrogen blistering. Careful visual inspection for these types of corrosion usually will be adequate to detect possible defects that require more detailed examination. In contrast, pitting is another form of corrosion that in some cases may not readily be detected in a visual inspection. Thus, a visual inspection often must be supplemented by special inspection equipment to assess a tank's condition fully.

Safety Precautions. As stressed in the preceding section on tank cleaning, the safety aspects associated with an internal inspection are very important. A tank should be emptied of liquid, freed of gases, and cleaned or decontaminated, if necessary. Protection from explosive and respiratory hazards should be provided for persons entering a tank. A complete discussion of safety procedures for internal tank inspections is beyond the scope of this document. Persons not experienced in the conduct of internal tank inspections should contact OSHA for assistance in establishing safety procedures.

Adequate lighting must be provided inside a tank for a safe and effective inspection. The roof and internal supports should be inspected first, followed by a preliminary visual inspection of the tank shell, to ensure that the tank is structurally stable.

Roof and Structural Members. A visual inspection of the roof interior usually suffices. Thickness measurements should be performed, however, when corrosion is evident. Special attention should be given to interior roof seals.

Tank Shell. The shell should be examined for visual corrosion. Tank shell thickness should be measured at representative points to ensure that thickness is maintained. While the bottom, the roof, and especially the shell are being inspected for corrosion, the plate joints and the nozzle connection joints should be inspected for cracking. If any cracking is found, a more thorough investigation by magnetic-particle, penetrant-dye, or radiographic methods may be needed.

When the inside surfaces of a tank are lined with corrosion-resistant material, it is important to check for holes or cracks. Scraping or dye penetration is effective for locating pinholes and tight cracks. Bulges in a lining indicate leakage behind the lining and possible lining deterioration.

Tank Bottom. Tank bottoms should be hammered thoroughly to detect corrosion pits and sprung seams. Hammering generally should not be performed in the area around a leak, in an area suspected to be extremely thin, on equipment in caustic service, or on a brittle material. Radiography and ultrasonic testing methods, which are normally more accurate than hammer testing, can be used as an alternative to hammering in areas around a leak or in areas expected to be extremely thin. The rivets should be checked randomly for tightness and corrosion. The depressions in the bottom and the areas around or under roof supports and pipe-coil supports also should be checked visually.

Concrete Tanks. Concrete tanks represent a small percentage of hazardous waste tanks that are currently in use. Concrete, however, offers many advantages as a tank construction material. For example, corrosion protection is not required although some chemicals do attack concrete and protective coatings may be necessary. When properly constructed, the risk of leakage in concrete tanks is minimal.

Proper design and construction of concrete tanks is critical in the storage or treatment of hazardous waste. Leakage control is of major importance in concrete hazardous waste tanks. The following factors may cause concrete tanks to leak:

- Concrete permeability which allows the passage of water;
- Concrete cracks;
- Construction joint cracks and defects; and
- Chemical attack.

Cracks in concrete do not typically lead to structural failure, however, cracks in addition to voids in concrete structures can induce leakage in a concrete tank. Cracks in aboveground, onground and inground tanks can be detected by visual inspection. The extent of cracking can be made more obvious by spraying the tank with water. When the overall surface has dried, the cracks will be more prominent. Temperature changes can also expand and contract the concrete, thereby creating stresses which may possibly lead to cracking.

Factors that affect the durability of concrete include:

- Freezing and thawing;
- Chemical attack;
- Abrasion;
- Corrosion of reinforcement; and
- Chemical reaction of concrete aggregate.

For the purposes of inspection of hazardous waste concrete tanks, chemical attack is the most prominent concern. All other effects can generally be prevented.

Temperature effects (i.e., freeze-thawing) can be prevented via air entrainment of admixtures and proper design of concrete mixes. Concrete tanks are not as exposed to the weather as are other structures, such as roadway bridges or airport pavements. For inground tanks, the surrounding earth actually acts as insulation, thereby offsetting the effects of temperature change.

Various coatings aid in preventing corrosion of reinforcement and chemical reaction of concrete aggregates is rare.*

In summary: when conducting inspections and determining inspection frequencies for concrete tanks, several characteristics of concrete must be considered:

- Concrete is susceptible to freeze-thaw cracking and deterioration if not properly air entrained;
- If not made with sulfate-resistant cement, concrete is subject to attack by nearly all sulfate salts;
- Concrete is susceptible to attack by many chemicals, including alum, chlorine, ferric chloride, sodium bisulphate, sulfuric acid, and sodium hydroxide; and
- Concrete may be permeable to some liquids.

The American Concrete Institute (ACI) Manual of Concrete Inspection includes information on inspection fundamentals, testing of materials, sampling, and inspection before, during, and after construction.

---

* Information excerpted from "Analysis For Revised Hazardous Waste Tank System Standards," USEPA, March 20, 1986.

G) Ancillary Equipment Assessment

For assessing the integrity of ancillary equipment the practices described in API, "Guide for Inspection of Refinery Equipment, Chapter XI - Pipe, Valves and Fittings," Second Edition, 1974, may be used, particularly Section 11.9, for "procedural guidelines." Inspections may be conducted either while equipment is in operation or while equipment is shut down. The API, "Guide for Inspection of Refinery Equipment, Chapter XI - Pipe, Valves and Fittings," describes procedures for these inspections.

While equipment is in operation, piping, valves and fittings can be visually checked for leaks, misalignment, integrity of supports, vibration, external corrosion, accumulation of corrosive liquids, or fouling. Thickness measurements can be calibrated via ultrasonic and radiographic inspection. Non-destructive inspections for hot-spots (for pipes operating at temperatures in excess of the design limit or in the creep range) and of underground piping (which is usually only spot inspection for external corrosion) and review of previous inspection records can facilitate determination of the system's structural integrity.

While equipment is shut down, visual inspections of gaskets, flanges, valves, and joints can be conducted for corrosion, erosion, fouling, cracks, misalignment, vibrations, and hot spots. Thickness measurements and pressure tests to determine tightness can be performed as well to determine structural integirty. See API "Guide for Inspection of Refinery Equipment, Chapter XI - Pipe, Valves and Fittings," Second Edition, 1974, (Section 11.9) for details on these procedures.

H) Assessment Schedule

Section 264.191(a) of the regulations requires that the assessment must be conducted by January 12, 1988 for existing tank systems or within

twelve months after the date that a waste was classified as hazardous by EPA, for those systems that store wastes that were not listed or otherwise classified as hazardous at the time of promulgation (July 14, 1986).

I) Leaking or Unfit-For-Use Tank Systems

Section 264.191(d) of the regulations requires that if a tank system is found to be leaking or unfit for use as a result of the assessment, the owner or operator of that system must comply with Sect. 264.196, "Response to leaks or spills and disposition of leaking or unfit-for-use tank systems." That section of the regulations is discussed in Section 11 of this document. In brief, the regulations require that the tank system be removed from service immediately, that the leakage be stopped or contained, and that the tank system be repaired and provided with secondary containment before being put back into use.

4.2 SUMMARY OF MAJOR POINTS

The following summarizes the information covered in this section and should be used to assure the completeness of a Part B permit application.

- Is the independent, qualified, registered professional engineer currently registered in the state(s) where the tanks are located?
- Has the engineer reviewed and certified the written assessment?
- In the written assessment, have the following issues been addressed?

NEW TANK SYSTEMS

- -- Design standards for tanks and ancillary equipment.
- -- Hazardous characteristics of the waste.
- -- Design or operational measures to protect underground tanks against vehicular traffic.
- -- Design considerations to ensure that:
  - -- tank foundations will maintain full tank load;

  - anchoring to prevent flotation and dislodgment;
  - tank systems will withstand frost heave.
- Written statements on file at the facility by persons certifying design, installation, repairs.

EXISTING, USED, REUSED TANK SYSTEMS

- Written assessment reviewed and certified by an independent, qualified, registered professional engineer that attests to tank system's integrity.
- Tank system assessment must be conducted by 1/12/88 and include:
  - Design standards;
  - Hazardous characteristics of the waste(s) that have been and will be handled;
  - Documented (or estimated if documented not available) age of tank system;
  - Results of leak test or other inspection: for non-enterable underground tanks--a leak test. For other than non-enterable underground tanks and for ancillary equipment--a leak test or other integrity examination certified by an independent, qualified, registered professional engineer.
- Tank systems that store or treat materials that become hazardous waste subsequent to July 14, 1986 must conduct the assessment within 12 months after the date that the waste is defined as hazardous.
- If the assessment indicates that a tank system is leaking or unfit for use, the requirements of Sec. 264.196, "Response to leaks or spills and disposition of leaking or unfit-for-use tank systems" must be followed.

In addition, see Appendix A, "Completeness Checklist," to verify compliance with the requirements of this section.

5.0 DESIGN AND INSTALLATION OF NEW TANK SYSTEMS OR COMPONENTS

In order to evaluate the adequacy of a tank system to hold hazardous waste for its intended lifetime, the Environmental Protection Agency (EPA) must obtain sufficient information on the tank system's design. Thus, the following subsections describe the tank system design information requirements for a permit application. Sub-section 5.1 discusses tank dimensions and capacity; Sub-section 5.2 discusses tank ancillary equipment specifications; Sub-section 5.3 discusses tank system diagrams; Sub-section 5.4 discusses corrosion protection equipment; Sub-sections 5.5 & 5.6 discuss installation of new tank systems; and sub-section 5.7 addresses major issue points that should be addressed in the application.

5.1 DIMENSIONS AND CAPACITY OF THE TANK

Citation

Information on the dimensions and capacity of a tank must be included in Part B of the permit application, as specified in 40 CFR:

Sec. 270.16(b), dimensions and capacity of each tank.

Guidance

Information about tank dimensions and capacity is required for Part B of the permit application, as delineated in Sec. 270.16(b) so that any tank described in the application can be accurately identified and classified. This requirement helps to ensure that tanks are properly designed and constructed in accordance with recognized guidelines and standards. The information on dimensions and capacity should be provided in addition to the storage and treatment volumes of the tanks given in Part A, Section III ("Processes--Codes and Design Capacities") of the application. Each individual hazardous waste tank should be described independently in the Part B application, with its dimensions and capacity clearly indicated.

It is advisable that a general, written description of each tank incorporate the following information (easily provided in tabular form):

- Shape of tank (i.e., spherical, cylindrical, etc.);
- Material(s) of construction;
- Inside diameter or perimeter dimensions, in feet and inches (or alternatively, in metric units);
- Outside height and length, in feet and inches;
- Nominal capacity, in U.S. gallons;
- Maximum capacity, in U.S. gallons;
- Wall thickness, in inches or fractions of inches (bottom plates, shell plates and roof, or shell only, as applicable);
- Description of appurtenances (type, size, and location for all nozzles, manholes, and draw-offs); and
- Stairways, supports, fittings, platforms, and walkways.

Each general tank description should be accompanied by detailed scale, cross-sectional plans, and elevation drawings that specify all dimensions of the tank. Illustrative examples of such drawings can be found in Figures 5-1 through 5-3. A tank manufacturer's specification sheet should be included with the permit application. In addition, a gauge chart that indicates capacity per foot of length (or height) in a tank with a particular diameter should be provided, if available. For an irregularly shaped tank, the manufacturer should provide a capacity table that is specific to the tank.

Figure 5-1
Tank Dimensions

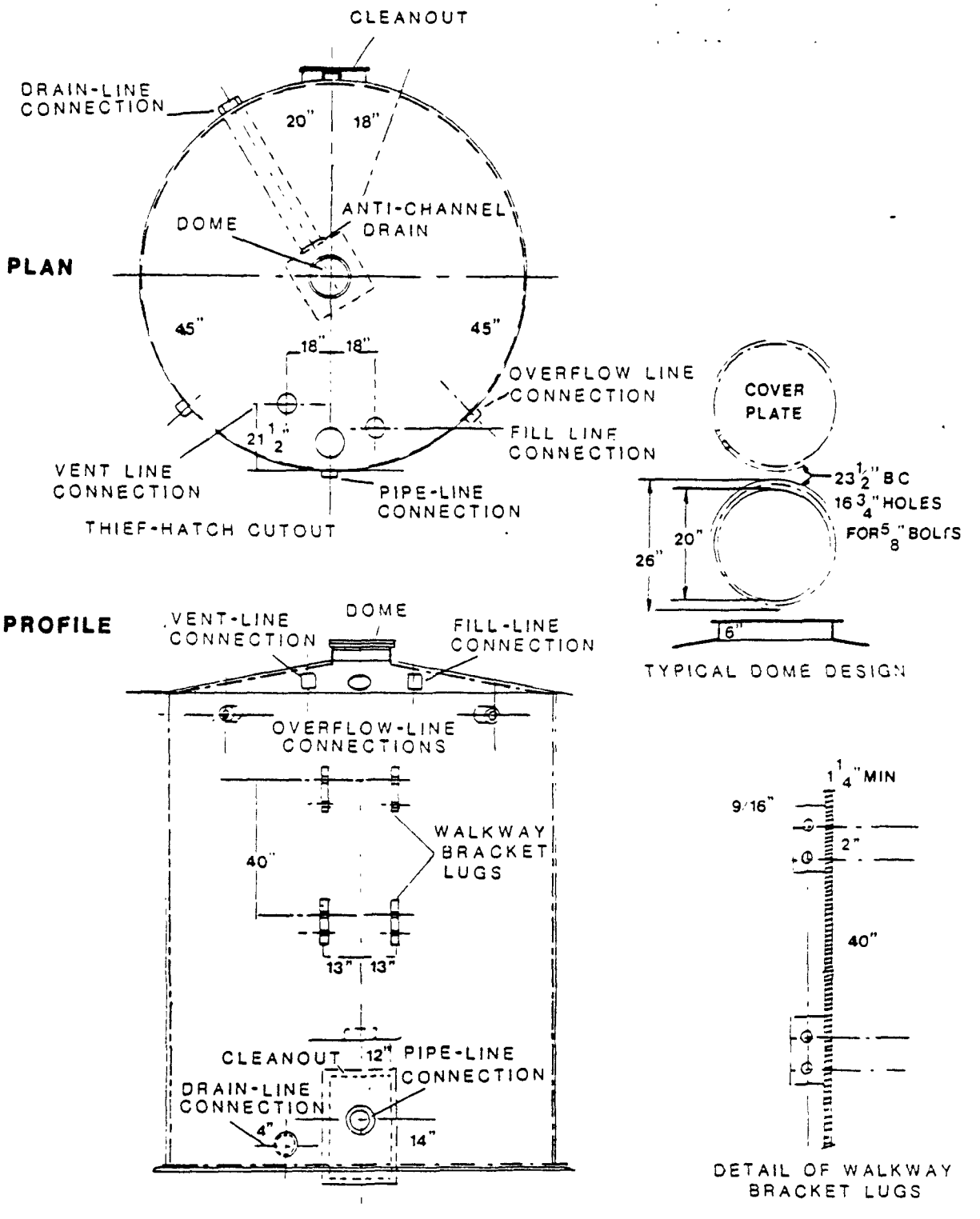

FIGURES ARE FOR ILLUSTRATIVE PURPOSES ONLY. THEY ARE NOT INTENDED FOR USE AS CONSTRUCTION DRAWINGS.

Figure 5-2
Tank Dimensions (Cont.)

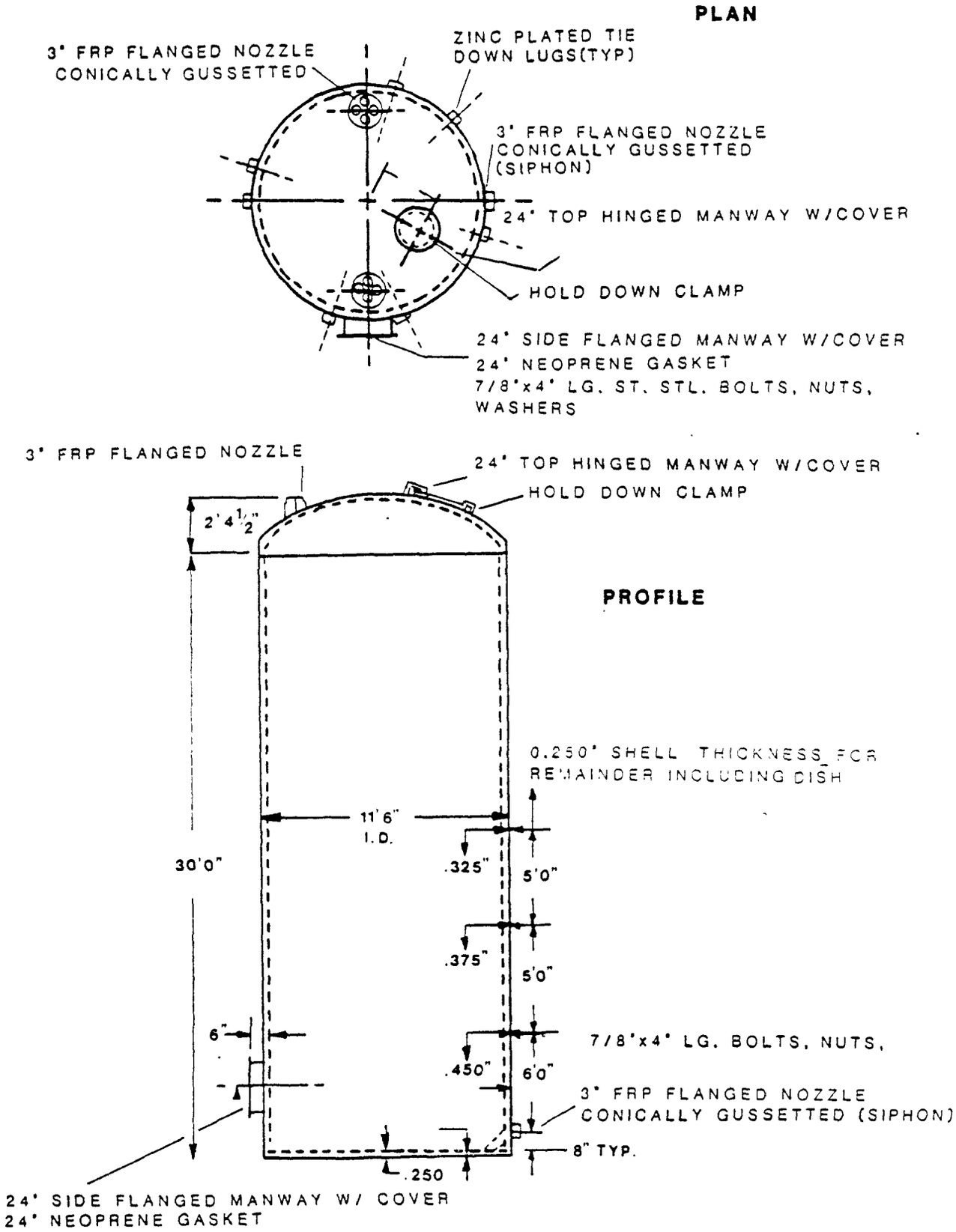

FIGURES ARE FOR ILLUSTRATIVE PURPOSES ONLY. THEY ARE NOT INTEND FOR USE AS CONSTRUCTION DRAWINGS.

Figure 5-3
Tank Dimensions (Cont.)

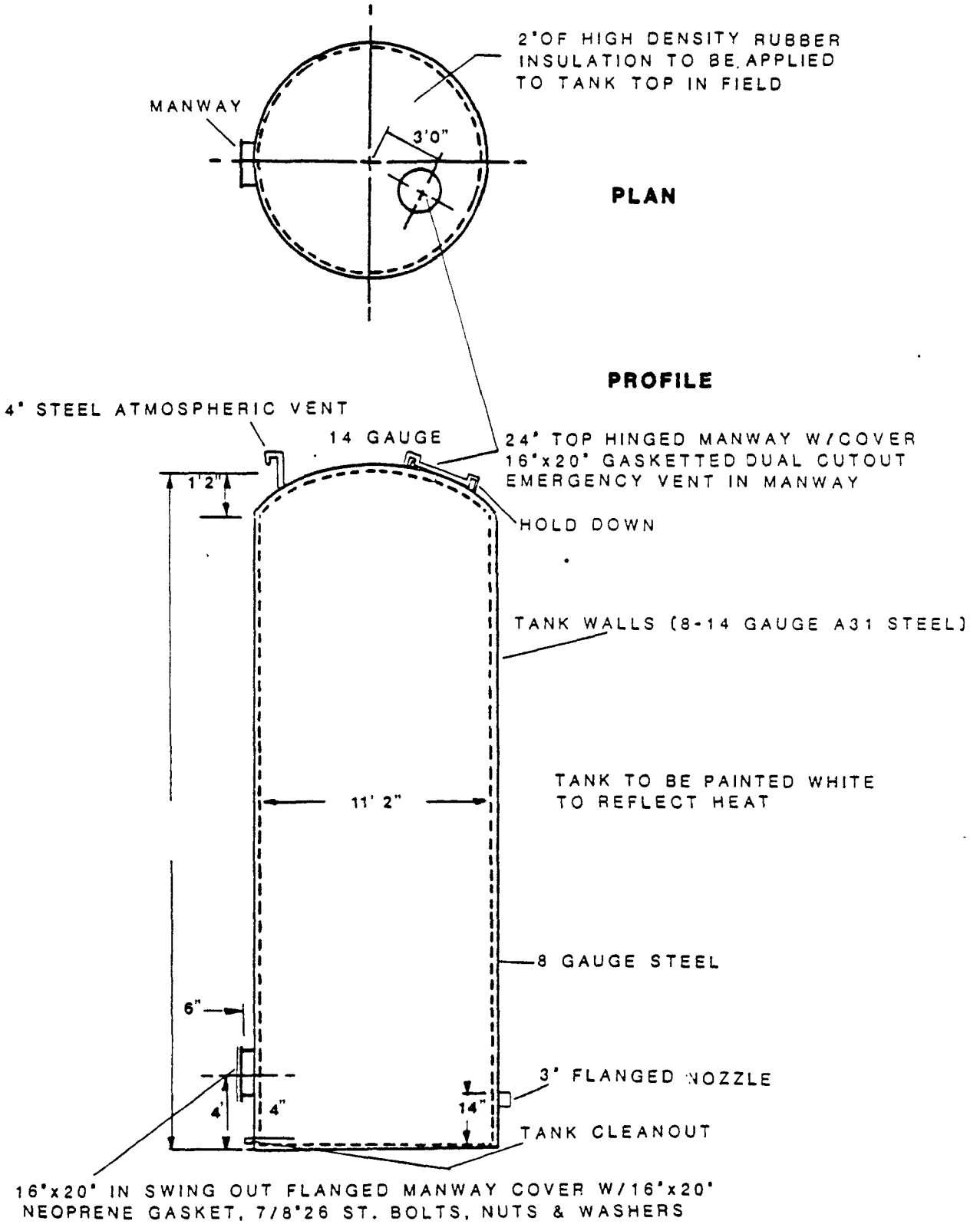

A) Aboveground/Onground/Inground Tanks

Aboveground/onground/inground steel tanks can be either preconstructed (fabricated by the manufacturer in a variety of standard sizes and purchased ready-to-install) or field-welded (constructed onsite with rolled steel plates and welded together, according to predetermined specifications). Preconstructed steel tanks are generally less than 12 to 15 feet in diameter; tanks that have diameters greater than 12 to 15 feet are usually field-welded. Fiberglass-reinforced plastic (FRP) tanks are always purchased ready-to-use from the manufacturer and are available in a wide variety of shapes, dimensions, and capacities.

Preconstructed tanks are usually delivered with a detailed specification sheet from the tank manufacturer that describes not only all tank dimensions and capacity but any other unique tank design features as well. The specifications sheet should include maximum and nominal capacities, especially for conical or rounded-top tanks and any other type of tank where actual liquid storage capacity does not necessarily correspond to total tank volume. The specification sheet should be submitted with the permit application.

Field-welded steel tanks are built to engineer's and/or manufacturer's specifications onsite. Tank dimensions are usually determined by calculations that take into account the required volume of storage capacity and the available area for the tank. Calculated dimensions, however, may not represent actual, final field-welded dimensions of the tank, due to variations in design or construction techniques, irregular welding of seams, and other variables resulting from field fabrication. All field-welded tanks should be "strapped" (accurately field measured) following construction, to determine the actual final dimensions and capacity of the tank. Strapped measurements can then be compared with design specifications to determine if sizable changes in the dimensions of the tank are present following field fabrication. Wherever possible, field-welded tanks should be described using dimensions and capacities

determined by field measurement following construction. A depth versus capacity chart should be made for a field-welded tank soon after it is installed.

Details concerning the wall thickness of aboveground/onground/inground steel tanks should be explicitly provided in the Part B application. Sample recommendations may be found in Table 5-1. The dimensions in the table do not reflect any allowance for corrosion or for variations in the density of tank contents.

In certain aboveground/onground/inground tanks, thickness may be variable with height along the sides of a tank, with the lower cross sections requiring greater thickness than the upper ones. This tank design must be noted in the permit application. Such an approach to tank design is referred to as "graduated wall thickness" and is frequently employed in shop-fabricated, reinforced-plastic tanks. Table 5-2 outlines recommended minimum thicknesses for graduated wall, aboveground reinforced-plastic tanks. A safety factor of 10 is built into these recommendations.

B) Underground Tanks

Underground tanks (steel or FRP) are usually preconstructed tanks built to a variety of predetermined capacities and dimensions, although they can also be made-to-order to fit customer specifications. The manufacturer's specification sheet for such a tank should be included as part of the permit application.

In particular, detailed dimensions and drawings should be provided for FRP tanks, which may be irregularly shaped or ribbed and difficult to describe accurately without a scale drawing. Following emplacement of FRP tanks, field capacity testing is recommended, since large FRP tanks are not rigid and may "slump" or distend once tank installation is complete. Slumping may cause uneven distribution of tank volume, producing a discrepancy in the height-to-volume ratio specified in the gauge table.

TABLE 5-1

VERTICAL, ABOVEGROUND STEEL TANK MINIMUM WALL THICKNESSES[1]

Capacity (Gallons)	THICKNESS (INCHES) Carbon Steel			Stainless Steel		
	Shell[2]	Bottom	Top	Shell[2]	Bottom	Top
1,100 or less	0.093	0.093	0.093	0.086	0.086	0.086
Over 1,100	0.167	0.240	0.123	0.115	0.158	0.086

Source: Underwriters Laboratory, Inc., UL 142, "Steel Aboveground Tanks for Flammable and Combustible Liquids" (1985).

HORIZONTAL, ABOVEGROUND STEEL TANK MINIMUM WALL THICKNESSES

Capacity U.S. Gallons	Maximum Diameter Inches	THICKNESS (INCHES) Minimum Metal Thickness, Inches	
		Carbon Steel	Stainless Steel
500 or less	48	0.093	0.071
551-110	64	0.123	0.086
1,101-9,000	76	0.167	0.115
1,101-35,000	144	0.240	0.158
35,001-50,000	144	0.365	0.240

Source: Underwriters Laboratory, Inc., UL 142, "Steel Aboveground Tanks for Flammable and Combustible Liquids" (1984).

NOTES: (1) Dimensions are exclusive of corrosion allowance or variations in density of tank contents.

(2) For a tank more than 25 feet in height, all parts of the shell located more than 25 feet below the top edge of the shell shall not be less than 1/4 inch.

TABLE 5-2

ABOVEGROUND REINFORCED-PLASTIC TANK MINIMAL GRADUATED WALL THICKNESSES

Distance From Top Of Tank (Feet)	Minimum Wall Thickness (Inches) for Tanks of Diameter:														
	2.0	2.5	3.0	3.5	4.0	4.5	5.0	5.5	6.0	7.0	8.0	9.0	10.0	11.0	12.0
	Feet														
2	3/16	3/16	3/16	3/16	3/16	3/16	3/16	3/16	3/16	3/16	3/16	3/16	3/16	3/16	3/16
4	3/16	3/16	3/16	3/16	3/16	3/16	3/16	3/16	3/16	3/16	3/16	3/16	3/16	3/16	3/16
6	3/16	3/16	3/16	3/16	3/16	3/16	3/16	3/16	3/16	3/16	3/16	3/16	1/4	1/4	1/4
8	3/16	3/16	3/16	3/16	3/16	3/16	3/16	3/16	3/16	1/4	1/4	1/4	1/4	1/4	5/16
10	3/16	3/16	3/16	3/16	3/16	3/16	3/16	1/4	1/4	1/4	1/4	1/4	5/16	5/16	5/16
12	3/16	3/16	3/16	3/16	3/16	3/16	1/4	1/4	1/4	1/4	1/4	5/16	5/16	5/16	3/8
14	3/16	3/16	3/16	3/16	1/4	1/4	1/4	1/4	1/4	5/16	5/16	5/16	5/16	3/8	3/8
16	3/16	3/16	3/16	1/4	1/4	1/4	1/4	1/4	1/4	5/16	5/16	3/8	3/8	3/8	7/16
18	3/16	3/16	3/16	1/4	1/4	1/4	1/4	5/16	5/16	5/16	3/8	3/8	3/8	7/16	1/2
20	3/16	3/16	1/4	1/4	1/4	1/4	5/16	5/16	5/16	3/8	3/8	3/8	7/16	1/2	1/2
22	3/16	1/4	1/4	1/4	1/4	5/16	5/16	5/16	5/16	3/8	3/8	7/16	1/2	1/2	9/16
24	3/16	1/4	1/4	1/4	1/4	5/16	5/16	5/16	3/8	3/8	7/16	1/2	1/2	9/16	5/8

NOTE: Exclusive of any corrosion allowance or variations in liquid density of tank contents.

Source: Mallinson, J., "Chemical Plant Design With Reinforced Plastics" (New York, NY: McGraw-Hill Publications, 1969).

5.2 DESCRIPTION OF FEED SYSTEMS, SAFETY CUTOFF, BYPASS SYSTEMS, AND PRESSURE CONTROLS

Citation

A description of the equipment used in the transfer of waste material to storage tanks at the facility must be included with Part B of the permit application. This ancillary equipment includes tank venting devices and spill and overfill prevention devices, as specified in 40 CFR:

Sec. 270.16(c), description of feed systems, safety cutoff, bypass systems, and pressure controls (e.g., vents).

Guidance

Sec. 270.16(c) requires information about equipment associated with the transfer of waste into the tank and the venting of vapors from the tank to allow EPA to evaluate the capability of a system to meet construction guidelines and standards. These guidelines and standards are designed to prevent:

- Explosion or implosion of tanks;
- Fire;
- Emission of hazardous vapors; and
- Spillage of hazardous waste resulting from overfilling vessels or drainage from transfer hoses.

All information required to make such an evaluation should be available from the tank manufacturer. The description should include a statement as to whether or not the following are used:

- Welded flanges and joints

- Sealless valves
- Sealless or magnetic coupling pumps
- Piping shut-off devices.

The description should address the following system components:

A) Feed System

Many spills occur at storage tank facilities during transfer of material because of overfilling the tank, forcing waste out of vent lines, or draining the waste remaining in the delivery tube during disconnection procedures. In underground tanks, the fill pipe may actually rupture below the soil surface because of improper support and/or excessive vibration, resulting in undetected discharge of material directly into the surrounding soil. Use of proper equipment and operating practices can prevent transfer spills of this nature. The equipment used to prevent the overfilling of vessels consists of instrumentation designed to monitor continuously the liquid-level in the tank, an alarm system, and a safety cutoff or bypass that is triggered when a "high-level" condition is reached. This equipment is described below.

1) LEVEL SENSORS

A liquid-level sensor generally falls into one of the following classifications:

- Float-actuated devices
- Displacer devices
- Hydrostatic-head sensors
- Capacitance sensors
- Thermal-conductivity sensors
- Ultrasonic devices
- Optical devices

To provide warning of the liquid-level, some aboveground/onground/inground tank systems use two level sensors: one for high liquid-level (95 percent full) and one for high, high liquid-level sensing (98 percent full). Characterization of liquid-level sensors, as discussed in Section 9.0, will aid in the permit application description.

2) ALARM SYSTEM

The liquid-level sensor should be tied into an alarm system that notifies the operator of a high-level condition. The alarm system may be either visual or audible, or a combination of the two. An audible alarm is generally preferable because it will alert the operator without continual visual monitoring. Individual lights, however, may be used in conjunction with an audible alarm to indicate in which tank a high liquid-level condition exists.

3) LIQUID TRANSFER

The manner in which liquid is admitted to a tank as part of a feed system can cause turbulence, resulting in foaming, release of hazardous vapors, or generation of static charge in the waste. This is particularly likely if the fill pipe empties above the waste liquid's surface; therefore, a fill pipe entering a tank should terminate within three inches of the bottom of the tank. A deflection or striker plate should be installed beneath the opening of a fill pipe that terminates near the bottom of a tank. Without such a plate, the tank shell may be subject to corrosion in this area. Proper support must be provided to prevent vibration that could lead to breakage of the fill pipe, resulting in direct discharge of material to the soil.

Connections for all tank openings, including the fill pipe, should be liquid-tight, properly identified, and closed when not in use.

Openings designed for combined fill and vapor recovery should be protected against vapor release, unless connection of the liquid delivery line to the fill pipe simultaneously connects the recovery line. A number of variations on liquid delivery/vapor recovery systems are available, and a description of the type of system employed in each tank is required.

A feature commonly included in the discharge pipe of a suction pump is a check-valve system to prevent reversal of flow. There are three basic designs for check valves: swing, lift, and tilting-disk. Check valves are available in a wide variety of sizes and materials of construction.

Transferring hazardous materials into or out of storage tanks also requires the use of tight coupling connections which can withstand the temperature, pressure, and chemical compatibility requirements demanded of them. Couplings may be described in terms of their method of connection and materials of construction.

The description of the transfer piping and any associated check valves and couplings should include the following information:

- Material of construction for piping;
- Distance of fill line offset from tank, if applicable;
- Distance from tank bottom to termination of fill pipe;
- Method of attachment and support of fill pipe;
- Liquid-delivery/vapor-recovery system;
- Type and location of any check valves, including size and materials of construction; and

- o Type of coupling connections, including size and materials of construction.

B) Safety Cutoff or Bypass Systems

In addition to interfacing with an alarm system, the liquid-level sensing devices should be directly connected to an automatic safety cutoff or bypass system. These control systems are designed to receive a signal from the liquid-level sensing device when it reaches a preset high level. The systems then automatically transmit a message either to the tank-loading pump to deactivate (safety cutoff) or to a system equipped with various flow-control valves and pumps to divert flow to another storage tank (bypass). For aboveground/onground/inground tanks, a manual emergency overflow system may also be provided in case the automatic control system should malfunction. An overflow to the secondary containment system must exist in case the entire system (tank and overflow tank) is filled to capacity. This overflow point must be visible.

The description of each safety cutoff or bypass system employed at a facility should include the type of liquid-level sensing device and the method by which the signal is transmitted from it to the actual cutoff or bypass mechanism. This transmission is generally accomplished by electrical or pneumatic methods, because of their respective adaptability to remote operation; however, mechanical devices may also be employed. Types of valves, pumps, and overflow vessels should be described in detail in the facility summary.

C) Pressure Controls (e.g., Vents)

Most storage tanks are equipped with pressure-relief mechanisms to prevent physical damage or permanent deformation of the tank due to exceedance of normal operating pressure. Addition of wastes to a tank, as well as expansion and evaporation due to thermal changes, results in "outbreathing" (pressure-relief) of vapor from the tank. The required venting capacity for a tank must exceed the sum of the venting

requirements for addition of wastes into the tank and for expansion due to thermal effects. "Inbreathing" (vacuum relief) occurs when wastes are removed from a tank or when the gaseous volume decreases due to thermal effects. Exposure to heat or fire can result in rapid pressure increases, making additional emergency venting capabilities necessary.

Construction specifications designed to meet outbreathing and inbreathing requirements are dependent upon a number of variables that must be included in the description of the pressure controls called for in 40 CFR 270.16(c). These design and operational variables and their respective contributions to vent selection and arrangement should be described in the permit application. Such variables include:

1. Flash point and other relevant characteristics of the contained liquid or solid waste;

2. Maximum design pressure and capacity of each tank;

3. Maximum inflow and outflow rates;

4. Roof design and attachment mechanism to tank shell; and

5. Tank heating or cooling system, if applicable.

The American Petroleum Institute's (API) Standard 2000, "Venting Atmospheric and Low-Pressure Storage Tanks" (1982), provides extensive information on vent design.

Vent design, including emergency venting capabilities and safety relief devices, must be described in the permit application. A variety of vent types are available, and a description of the type employed on each tank at the facility should be provided. The following discussion of vent types should help in determining the type used on tanks.

Normal venting may be accomplished by a pilot-operated relief valve, a pressure-relief valve, a pressure vacuum (PV) valve, or an open vent with or without a flame-arresting device.

A pilot-operated relief valve is designed so that the main valve will open automatically and protect the tank in the event of failure of the pilot valve diaphragm or other essential functioning devices.

A pressure-relief valve is appropriate for tanks operating above atmospheric pressure. In cases where a vacuum can be created within a tank, vacuum protection may be required.

PV valves are recommended for use on atmospheric storage tanks in which material with a flash point below 100°F is stored and for use on tanks containing material that is heated above its flash point.

Open vents with a flame-arresting device may be used in place of PV valves on tanks in which material with a flash point below 100°F is stored and on tanks containing material that is heated above its flash point. Open vents without a flame-arresting device may be used to provide venting capacity for tanks in which material with a flash point of 100°F or above is stored, for heated tanks where the storage temperature is below the flash point, and for tanks with a capacity of less than 2,500 gallons.

Emergency venting may be accomplished by the use of:

- Larger or additional open vents;
- Larger or additional PV valves or pressure-relief valves;
- A gauge hatch that permits the manhole cover to lift under abnormal internal pressure; and
- A manhole cover that lifts when exposed to abnormal internal pressure.

The location of pressure-relief vents and the point of vapor release should be detailed in the description of venting devices. The point of vapor release must be noted by the permit applicant so that EPA may assess the potential safety hazards resulting from discharge of dangerous vapors in a confined area, fire hazards, and possible blockage of vent openings. Items to consider in discussing the point of release include:

- Can released vapors be trapped by adjacent obstructions?
- Are flammable vapors released at a sufficient height above ground level to prevent inadvertent ignition (e.g., by a person with a lighted cigarette)?
- Can the opening become blocked from weather, dirt, insects nests, etc.?
- Where is the vent discharge located relative to the fill pipe?

A brief discussion of the piping configuration of the vent system also should be provided and important points to discuss include:

- Are there any low points, bends, elbows, etc., where condensed liquid may collect and restrict vapor release and create a pressure increase in the vessel?
- Do manifolding or "dead ends" exist where mixtures in the flammable range may be trapped, creating the potential for explosions or fires?

5.3 DIAGRAM OF PIPING, INSTRUMENTATION, AND PROCESS FLOW

Citation

The owner or operator of a tank system must provide a diagram(s) of the piping, instrumentation, and process flow as required in:

Sec. 270.16(d), (provide) a diagram of piping, instrumentation, and process flow for each tank system.

Guidance

The intent of the Sec. 270.16(d) requirement is to ensure that each tank facility is designed in a manner that minimizes the possibility of releasing waste to the environment. Such a design would, for example:

- Minimize piping lengths, crossovers over other equipment, joints, and couplings;
- Have adequate instrumentation, such as level alarms, flow meters, shutoff valves, etc., to monitor and react to changing liquid and pressure levels; and
- Have process flows that separate incompatible materials, contain appropriate capacity and venting, have adequate line-cleanout capabilities, and minimize the need for disconnection.

Diagramming of a tank system's piping, instrumentation, and process flow can range from a detailed schematic drawing of all relevant tank system components to a complex blueprint drawn to scale. Relevant tank system components that should be shown on a diagram are:

- Fill lines (inlets);
- Draw-off lines (outlets);

- Piping, including directional changes (inside diameter, materials of construction, etc.);
- Pumps (type, horsepower, capacity, etc.);
- Flow meters (capacity);
- Gauging (measuring) lines;
- Level alarms;
- Valves (type);
- Vents (diameter, materials of construction);
- Leak-detection devices (type);
- Manholes and other openings;
- Floating suction arms, if any;
- Drainage; and
- Corrosion-control system (type).

Enlarged, detailed drawings of complicated portions of a system may be useful to emphasize relevant features (see Figure 5-4).

Accompanying documentation with a tank system diagram might explain briefly why particular instrumentation was selected. Documentation might also contain mass balance equations and a description of any complicated process flow aspects, including the cleaning of a tank system if new wastes are added that may be incompatible. Figures 5-5 and 5-6 contain examples of schematic diagrams for underground and aboveground tank facilities, respectively.

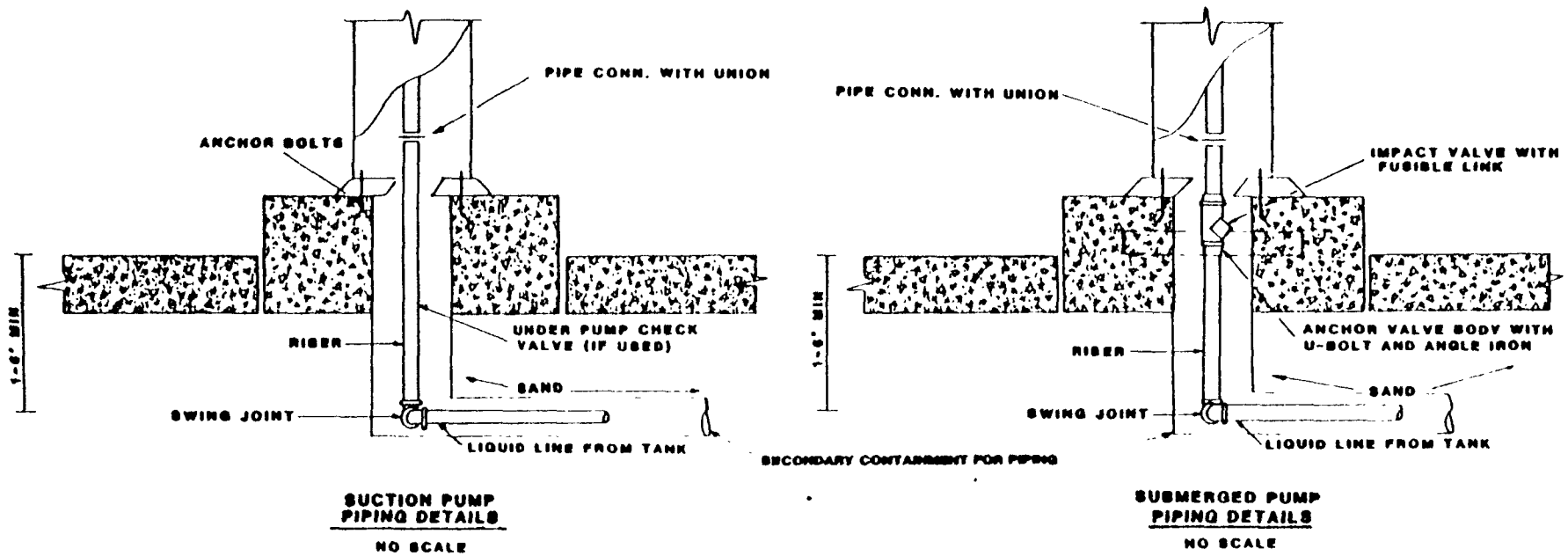

Figure 5-4

Piping Details for Suction or Submerged Pumps

FIGURES ARE FOR ILLUSTRATIVE PURPOSES ONLY THEY ARE NOT INTENDED FOR USE AS CONSTRUCTION DRAWINGS

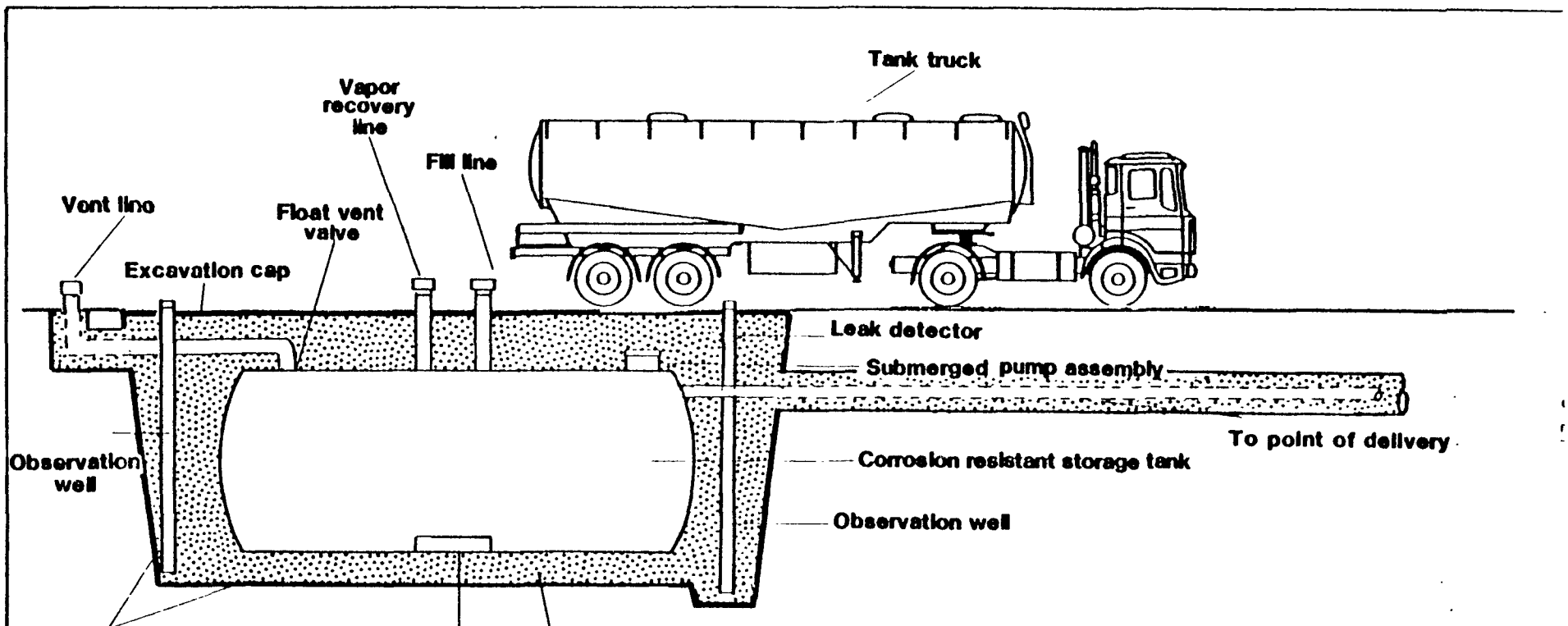

Figure 5-5

Elements of an Underground Storage Facility

FIGURES ARE FOR ILLUSTRATIVE PURPOSES ONLY. THEY ARE NOT INTENDED FOR USE AS CONSTRUCTION DRAWINGS.

Figure 5-6
Aboveground Tank System Connections

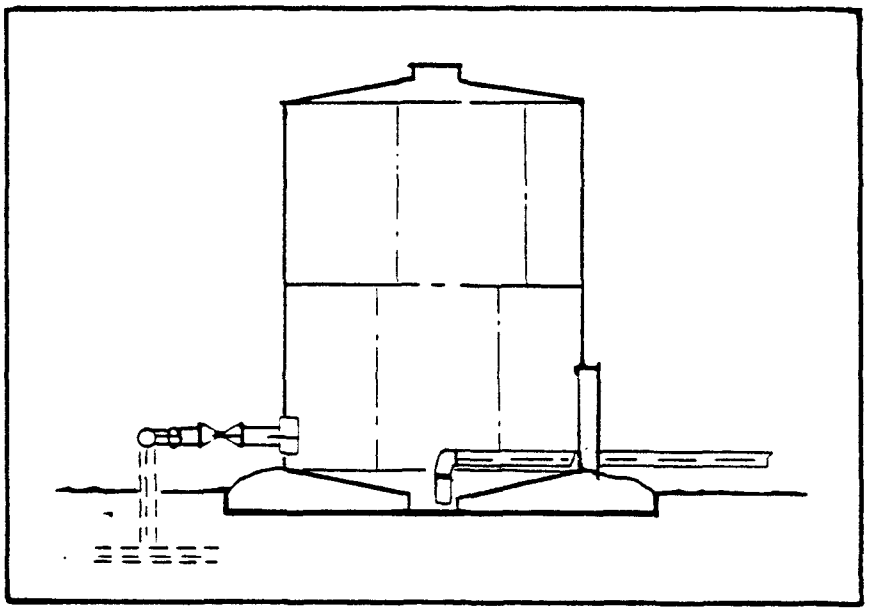

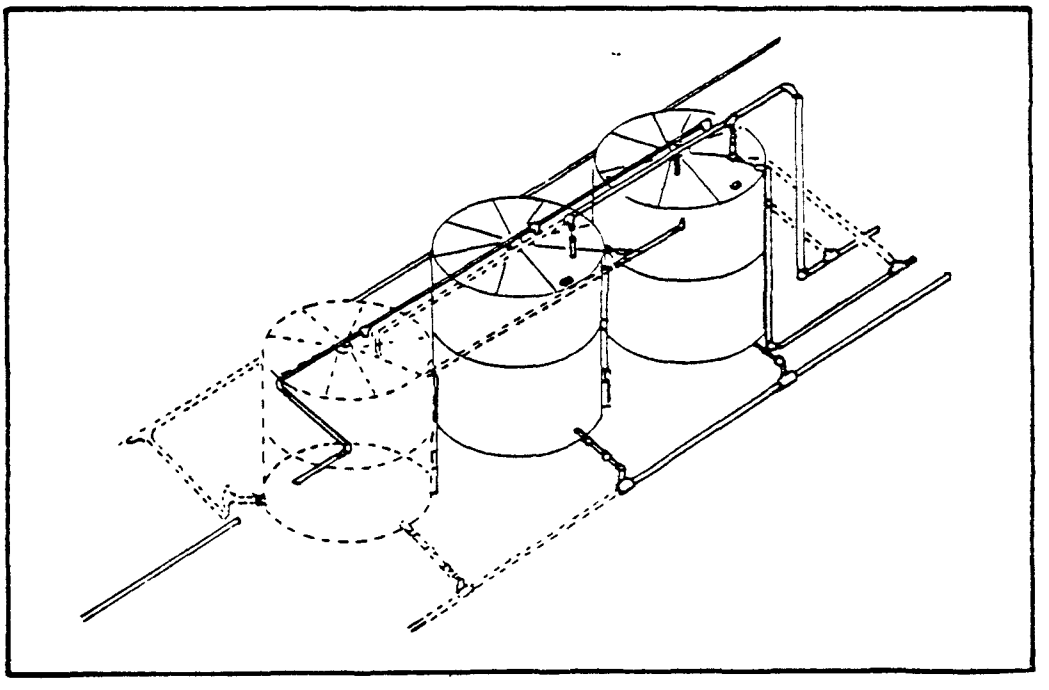

FIGURES ARE FOR ILLUSTRATIVE PURPOSES ONLY. THEY ARE NOT INTENDED FOR USE AS CONSTRUCTION DRAWINGS.

5.4 EXTERNAL CORROSION PROTECTION

Citation

Information on external corrosion protection for tanks with metal components or metal ancillary equipment is required from facilities that store or treat hazardous waste and must be included in Part B of the permit application, as specified in:

Sec. 270.16(e), Description of materials and equipment used to provide external corrosion protection, as required under Sec. 264.192.

Sec. 264.192(a)(f) and (g) of the regulations specifies the external corrosion protection measures and certification requirements.

5.4.1 Corrosion Potential Assessment.

Citation

For a tank system with metal components in contact with soil or with water, Sec. 264.192(a) requires that the owner/operator obtain an assessment by a corrosion expert of the corrosion potential of the soil environment surrounding the system. As this section states, the assessment must address:

(i) Factors affecting the potential for corrosion, including but not limited to:

- (A) Soil moisture content;
- (B) Soil pH;
- (C) Soil sulfides level;
- (D) Soil resistivity;
- (E) Structure to soil potential;
- (F) Influence of nearby underground metal structures (e.g., piping);
- (G) Existence of stray electric current; and
- (H) Existing corrosion-protection measures (e.g., coating, cathodic protection).

(ii) The type and degree of external corrosion protection that are needed to ensure the integrity of the tank system during the use of the tank system or component, consisting of one or more of the following:

(A) Corrosion-resistant materials of construction such as special alloys, fiberglass reinforced plastic, etc.;
(B) Corrosion-resistant coating (such as epoxy, fiberglass, etc.) with cathodic protection (e.g., impressed current or sacrificial anodes); and
(C) Electrical isolation devices such as insulating joints, flanges, etc.

Guidance

Accurate information must be obtained on the environment surrounding a metal tank system in contact with soil or water because such a tank system may be highly susceptible to corrosion. "A metal tank system in contact with water" pertains to inground water (high water tables) or saturated soils. It does not typically pertain to the temporary aftermath of a rain storm; however, if after a rain storm the area remains super saturated for a prolonged period of time, then precautions should be taken to prevent super saturation or a corrosion assessment must be performed. A corrosion expert should be consulted to assess the corrosion potential, as quantitatively as possible, of a particular environment. EPA expects this corrosion expert to be a person who, by reason of his/her knowledge of the physical sciences and the principles of engineering and mathematics, acquired by a professional education and related practical experience, is qualified to provide corrosion-control services for metal tanks and/or piping in contact with soil.

The National Association of Corrosion Engineers (NACE) is developing a special program to provide industry, government, and the general public with a system of recognizing qualified personnel in the field of cathodic protection. Scheduled for implementation in early 1987, the certification program will be based on the experience of NACE in accrediting and certifying corrosion personnel and protective coating inspectors.

Each level of certification will have specific requirements and will include an examination to make certain that the applicant fulfills the requirements.

Complete details of this certification program are available from NACE Headquarters, P.O. Box 218340, Houston, Texas 77218 (317/492-0535).

Independent, registered professional engineers with appropriate corrosion-protection experience with buried or submerged metal tank systems may also perform the corrosion potential assessment. The greater the accuracy of such an assessment, the more appropriate a corrosion-protection system design will be.

Corrosive deterioration of tank material may be either general or localized. General corrosion appears as a uniform loss of surface material, whereas localized corrosion results in a non-uniform loss of material. Table 5-3 lists several common forms of localized corrosion. Table 5-4 lists environments that may cause corrosion. This table lists environments that can cause both internal and external corrosion. The major factors that influence external corrosion of inground and underground tanks are soil characteristics, such as resistivity, the presence of chemical constituents (natually occurring or leaked from the tanks), pH, and moisture content. Figures 5-7 and 5-8 show some of the major corrosion mechanisms. Concrete structures with metal-reinforcing bars (rebars) may find that the rebars corrode under similar environmental conditions.

Each of the soil factors listed in Sec. 264.192(a) and shown in Figures 5-7 and 5-8 describes the corrosion potential of the environment surrounding a tank system.

Figure 5-7 (top) illustrates a potential galvanic corrosion environment in which dissimilar soil conditions exist because of the use of two different types of backfill material. Figure 5-7 (bottom) illustrates an anaerobic region near the botton of the tank, caused by trapped water between the tank and backfill, which can lead to bacterial corrosion.

Figure 5-8 (top) depicts galvanic corrosion caused by dissimilar metals in an old tank installed near a new tank, and in the piping and tank of the new

TABLE 5-3

COMMON FORMS OF LOCALIZED CORROSION

Type	Description
Bacterial corrosion	Soils or water that become oxygen-starved, i.e., anaerobic, cause this form of corrosion.
Contact or crevice corrosionbetween a metal and	Occurs at the point of contact or crevice a non-metal or between two metals.
Erosion corrosion	Moving fluid removes the protective surface film on a metal, allowing corrosion to occur.
Galvanic corrosion	Occurs when an electrolytic cell is formed in cases where dissimilar metals are electrically connected or where dissimilar soil conditions or differential aeration conditions exist.
Intergranular corrosion	Selective corrosion at the grain boundaries (microscopic) of a metal or alloy.
Pitting corrosion	Formation of shallow depressions or deep pits (cavities of small diameter).
Stray current corrosion	Occurs when direct electrical currents flow through metal.
Stress corrosion cracking	Corrosion accelerated by residual stresses resulting from fabrication operations or unequal heating and cooling of structure.

Source: New York State Department of Environmental Conservation, "Technology for the Storage of Hazardous Liquids--A State of the Art Review" (January 1983), pp. 11-17.

TABLE 5-4

ENVIRONMENTS THAT CAN CAUSE CORROSION

Material	Environment
Aluminum	Water and steam; NaCl, including sea atmospheres and waters; air; water vapor.
Aluminum bronzes	Water and steam; H_2SO_4; caustics.
Austenitic stainless steels	Chlorides, including $FeCl_2$, $FeCl_3$, NaCl; sea environments; H_2SO_4; fluorides; condensing steam from chloride waters; acids.
Carbon and low alloy steels	HCl; caustics; nitrates; HNO_3; HCN; molten zinc and Na-Pb alloys; H_2S; H_2SO_4-HNO_3; H_2SO_4; seawater; water; distilled water.
Copper	Tropical atmospheres; mercury; $HgNO_3$; bromides; ammonia; ammoniated organics; acids.
Ferritic stainless steels	Chloride, including NaCl; fluorides; bromides; iodides; caustics; nitrates; distilled water; steam.
High strength alloy steels (yield strength 200 psi plus)	Sea and industrial environments; water.
Inconel	Caustic soda solutions; high purity water with few ppm oxygen.
Lead	Lead acetate solutions.
Magnesium	NaCl, including sea environments; water and steam; caustics; N_2O_4; rural and coastal atmospheres; distilled water.
Monel	Fused caustic soda; hydrochloric and hydrofluoric acids.
Nickel	Bromides; caustics; H_2SO_4.
Titanium	Sea environments; mercury; molten cadmium; silver and AgCl; methanols with halides; red fuming HNO_3; N_2O_4; chlorinated or fluorinated hydrocarbons.

Source: Adapted from V.R. Pludek, Design and Corrosion-Control (New York, NY: John Wiley and Sons, 1977).

Figure 5-7

Corrosion Mechanisms

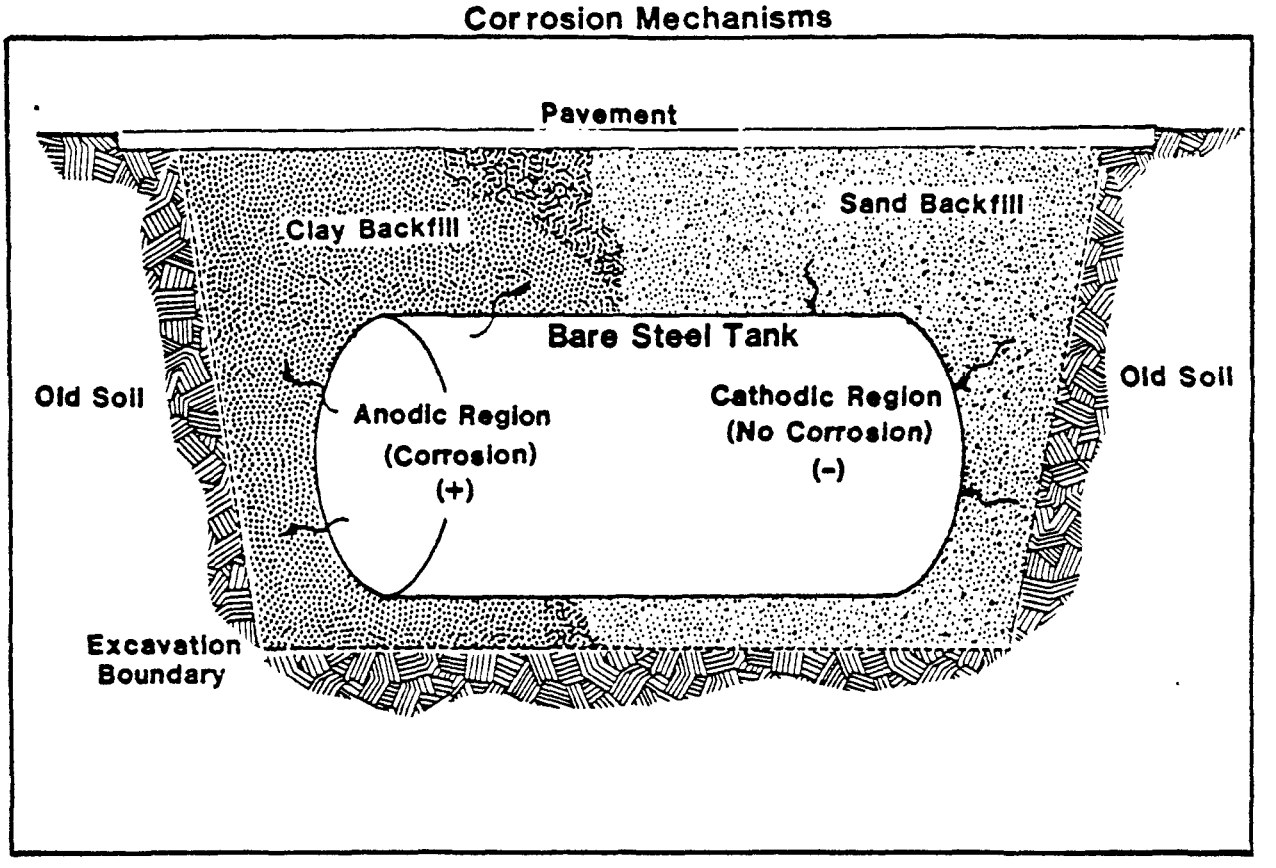

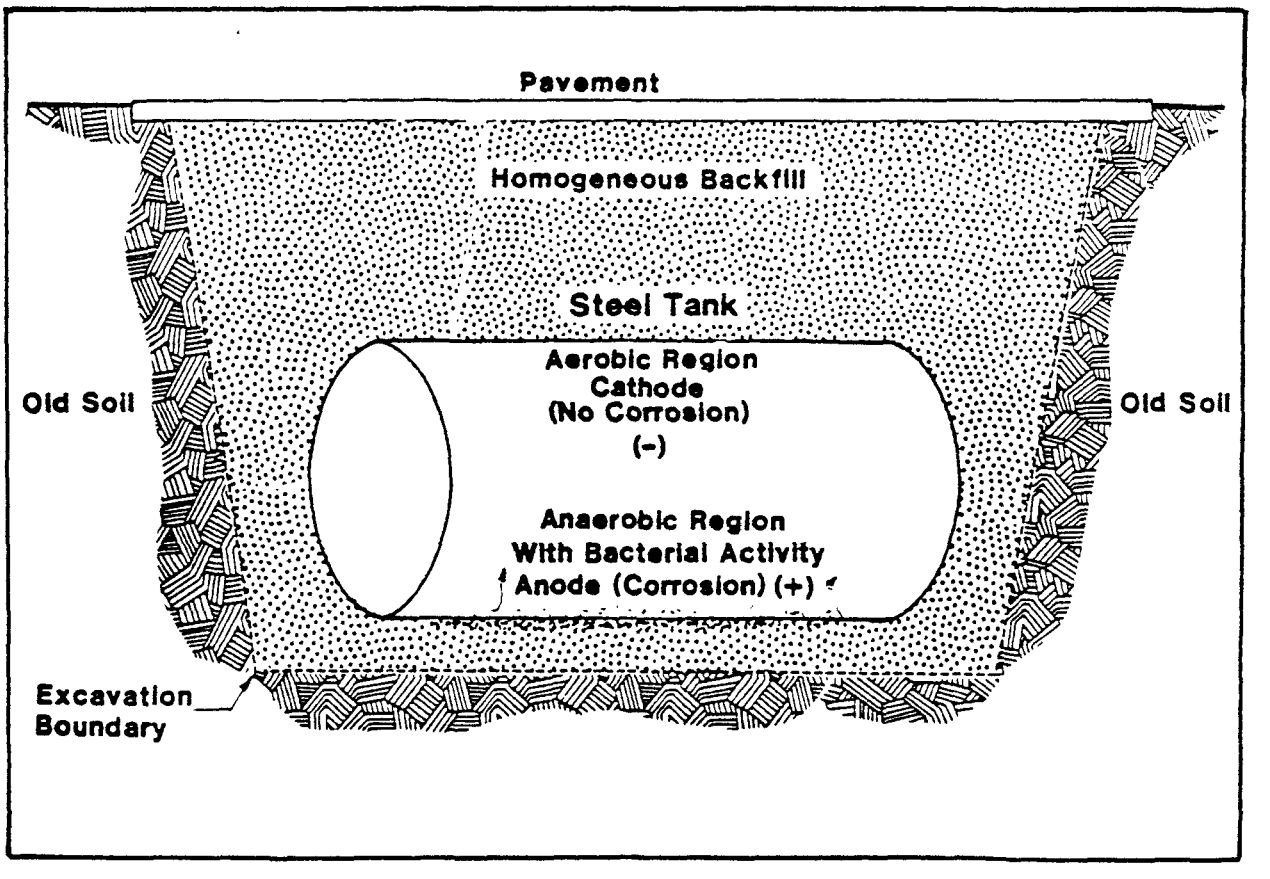

FIGURES ARE FOR ILLUSTRATIVE PURPOSES ONLY. THEY ARE NOT INTENDED FOR USE AS CONSTRUCTION DRAWINGS.

Figure 5-8

Corrosion Mechanisms (Cont.)

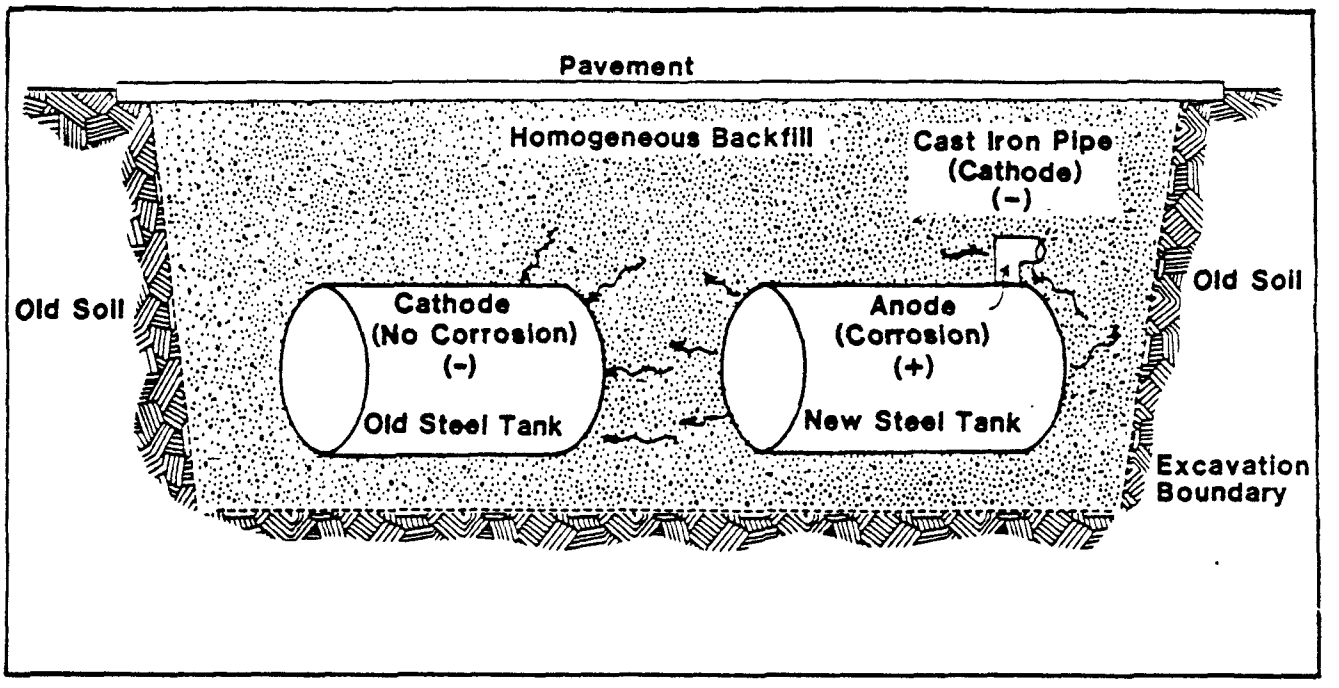

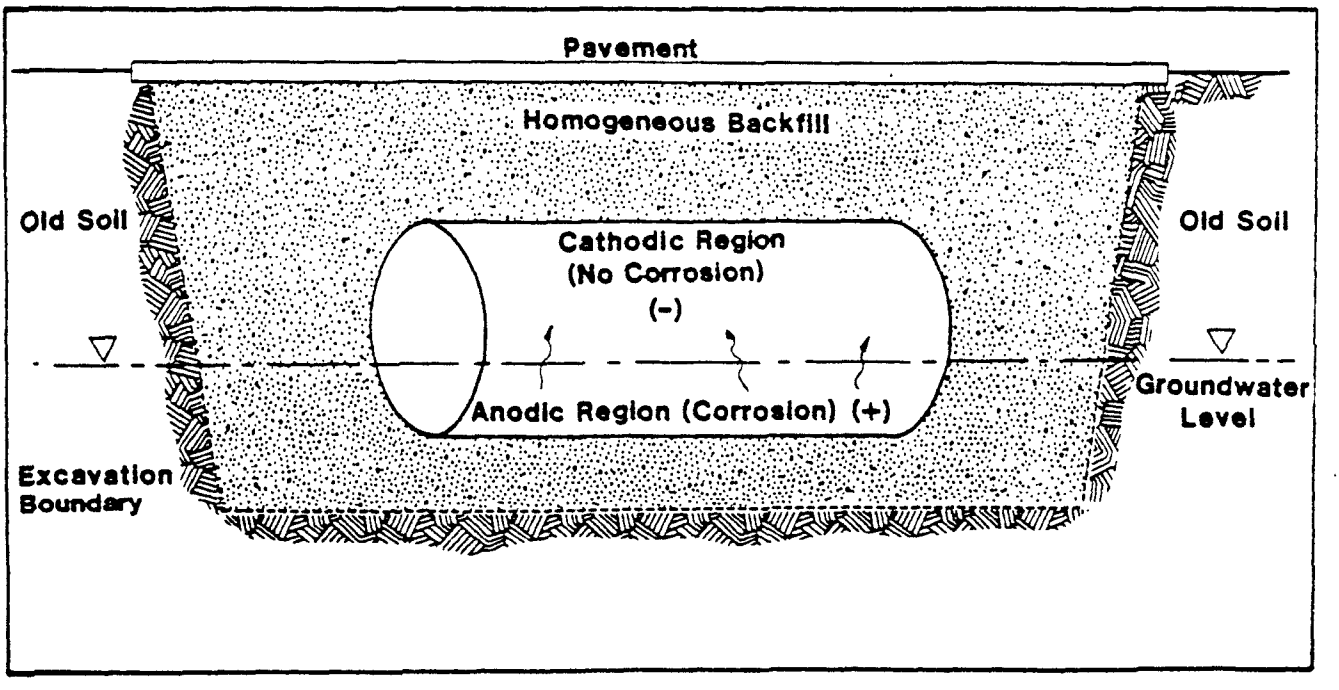

FIGURES ARE FOR ILLUSTRATIVE PURPOSES ONLY. THEY ARE NOT INTENDED FOR USE AS CONSTRUCTION DRAWINGS.

tank system. Figure 5-8 (bottom) depicts erosion corrosion, in which a high ground-water level is able to gradually remove the protective film on the surface of the tank and cause corrosion to occur. The following discussion provides an overview of how these factors affect the likelihood for corrosion of tanks buried in native soil materials and describes how the environmental data are interpreted by a corrosion expert. In this manner, the relative influence on tank system corrosion from each of the factors, and their combinations, may be determined. It is important for an assessor to examine not only present environmental conditions surrounding a tank system but also how these conditions may change over time. For example, the soil moisture level may fluctuate seasonally. Only an experienced corrosion expert is qualified to assess the surrounding environment and the corrosion-prevention needs of a tank system.

It should be noted here that the use of dry, crushed rock or dry pea gravel as backfill material (see Section 6.2 of this document) significantly reduces the potential for corrosion, if there is little or no ground water present.

A) Soil Moisture Content

The presence of moisture or water in soil reduces its resistivity, thereby increasing the probability and rate of corrosion in any portion of a tank system in contact with the soil. Trapped water near a tank system can become anaerobic and cause what is known as bacterial corrosion. A corrosion expert can identify an instance of bacterial corrosion by its musty smell, the presence of hydrogen sulfide, and other identifying characteristics (see soil sulfides, below).

Water can become trapped near a tank system from man-made or natural causes. Improper installation practices, for example, can enable water to accumulate alongside a tank because of voids in the backfill. A more complicated instance of soil moisture level affecting corrosion occurs when highly compacted road bases near a tank system have impermeable, compacted soil underneath the roads. This soil condition can alter the

ground-water flow conditions beneath the tank system because water will no longer flow through the surrounding soil. Chemical salts may then accumulate near the tank system, changing the chemistry and pH of the soil and potentially enhancing corrosion (see soil pH, below).

The introduction of irrigation or natural phenomena, such as earthquakes and seasonal soil moisture changes, can also change the flow and/or directional characteristics of the ground water underlying a tank system. A corrosion expert must use past experience with other tank systems to recognize and assess qualitatively and quantitatively the effects of soil moisture levels on present and future corrosion rates.

B) Soil Resistivity

Soil resistivity--the ability of soil to resist the flow of electricity--is an important factor in assessing corrosion potential and in designing adequate cathodic protection. A corrosion expert primarily uses resistivity and the strength of the external power source as a gauge for predicting the galvanic and stray electric current corrosion rates. Galvanic corrosion may occur when two dissimilar metal objects are placed in direct or electrical contact, when unhomogeneous soil conditions are present, when old metal is connected to newer metal, or when the metals are exposed to uneven aeration conditions. Stray current corrosion results from direct electrical currents flowing through the ground from an external power source (see stray electric current, below). The flow of current during corrosion takes place through the soil; thus, high resistivity soil impedes electron movement and slows corrosion. Without corrosion protection, the lower the soil resistivity, the greater the corrosion rate. There is no upper limit on resistivity in which a tank system will not corrode, however. That is, a high soil resistivity will decrease the corrosion potential of a tank system but will not necessarily eliminate the potential for corrosion. Chemicals which occur naturally in the soil and leaked wastes may lead to corrosion even in high resistivity soil. The intrusion of water may also decrease the resistivity to a value where corrosion would more likely occur. Soil resistivity is a guide but

not an absolute test of a tank system's ability to resist corrosion. Sand and gravel backfill generally have much higher resistivity than native soil backfill and can thus reduce corrosion potential.

To assess corrosion potential, a corrosion expert must measure the resistivity of the soil, for example, using the American Society for Testing and Materials (ASTM) Method G57-78 (the Wenner Method), the Barnes Layer Method, the Collins Method, or other methods, such as electromagnetic resistivity measurements. The type of test required is dependent upon the depth at which the resistivity is required (the Wenner Method providing an average resistivity over a range of depths and the Barnes Layer and Collins Methods providing resistivity values at specific depths) and the ease of drilling into the soil (the electromagnetic measurements are generally used when pavement is installed on the desired test site). Soil samples should be obtained as near to tank system metal as possible, preferably soil in contact with a tank bottom or soil along the tank sides near the tank bottom. A corrosion expert should also try to ascertain whether the soil environment around a tank system is unhomogeneous with respect to resistivity. If so, additional soil samples may be needed.

Resistivity measurements reflect moisture and chemical constituent levels in soil. The corrosion expert must evaluate how soil moisture, pH, and sulfide/chloride data will affect resistivity measurements in a given soil environment over time. For example, the corrosion expert has to estimate the magnitude of the effect on resistivity from seasonal ground-water level changes, road salt application, road installations that affect ground water, etc. These estimates will be based on past experience with other, similar tank systems and analysis of local, historical, and seasonal climatic changes. Resistivity values range from below 300 ohm-cm (highly corrosive) to over 12,000 ohm-cm (generally less corrosive).

C) Soil Sulfides Level

Sulfide levels can indicate the potential for bacterial corrosion. The bacteria converts soluble sulfates in soil to sulfides under anaerobic conditions. These sulfides can form acids that may attack tank system metal, causing corrosion. Soils with sulfide (or chloride) levels of approximately 300 mg/l are considered highly corrosive. Chloride often accumulates in soil from road salting in winter. Leaked wastes which have accumulated may also change the soil sulfide level and enhance the corrosion of the tank system. Soil sulfide or chloride levels and soil pH, in combination, is the second most important factor for evaluating the corrosion potential of a given environment, following soil resistivity.

D) Soil pH

Soil pH, a measure of the hydrogen ion content of soil, is an indicator of soil chemical characteristics. A corrosion expert must use the pH information in conjunction with other data on soil conditions, such as sulfide, chloride, and moisture levels, to assess the chemical corrosion potential of a particular soil environment. Good engineering practice generally would call for soil samples be taken as near to the bottom of a tank as possible, and as near the middle and the top of the tank as possible to determine if a variation in soil conditions could contribute to galvanic corrosion.

Low soil pH indirectly indicates elevated soil chloride content, a frequent cause of chemical corrosion. Additionally, when soil pH does not fall into the neutral range of approximately 6.2-8.7, soils may have unusual chemical characteristics that can cause corrosion. The presence of oxidizing agents in soil, such as nitrates, will induce corrosion. In the presence of a non-neutral soil pH, further chemical analyses may be necessary to assess the corrosion potential of the unusual soil environment. Low soil pH in sandy conditions, however, may simply indicate the presence of rainwater during the time of the pH test. High soil pH, in general, indicates a less corrosive environment. An

assessment by a corrosion expert is generally required to determine if the pH of the surrounding soil may have been altered by an accumulation of leaked waste.

E) Structure-To-Soil Potential

Structure-to-soil potential is a measurement of the potential difference (voltage) between a tank and the surrounding soil. The magnitude of the voltage is an indirect measure of how fast corrosion is occurring. The testing and the interpretation of results should be left to the corrosion expert.

It is advisable to install test stations for determining structure-to-soil potentials at the time the tank is first installed, since retrofitting an existing tank with test stations is much more difficult and costly. The use of test stations will facilitate the taking of measurements and will provide a common point of reference which should produce consistency in the test program.

F) Influence of Nearby Underground Metal Structures

When underground dissimilar metal structures are in close proximity and are connected by piping, conduit, wiring, or other continuous conductive pathways, the media (e.g., water and/or soil salts) between the metal structures provide the necessary electrical pathway so that galvanic corrosion can occur and destroy the tank.

In other words, the underground media complete an electrical circuit through the nearby dissimilar metals, and the resulting current flow can cause corrosion in the tank. A corrosion expert can assess the extent that nearby metal structures in contact with soil or water influence the corrosion potential of a tank system. Both the type of metals involved and the distance between the structures and a tank system are important factors in this determination. A separation of 12 inches between nearby buried metal structures is generally the minimum acceptable distance.

However, a corrosion expert should make a recommendation for each specific tank installation. The supervisor of a tank system installation should ensure that new metal tanks installed alongside old metal tanks are adequately separated. (See Section 6.0 of this document.) If separation is not possible, nearby metal structures may have to be electrically isolated from the tank system.

Nearby metal structures can also be inadvertently connected to a tank system, for example, through electrical and/or water system connections. This situation should be prevented by using electrical isolation devices (e.g., insulated bushings).

If a nearby underground metal structure has a cathodic-protection system, that system must be properly connected to or electrically isolated from the tank system. Otherwise, stray currents from the cathodic-protection system can cause accelerated corrosion of portions of the tank system.

G) Existence of Stray Electric Current

Stray electric currents from subway, gas distribution, and any other type of direct current (DC) power distribution system can increase the corrosion potential of a tank system. Direct currents flowing from the power sources through the ground to the tank system and then back to the sources cause stray current corrosion.

The rate at which stray current corrosion occurs is directly related to the intensity of the currents. These currents, if large enough, can even cause coatings to separate from tanks. A corrosion expert should be able to assess the relative corrosion potential of a tank system by determining its proximity to sources of stray current, evaluating the complex electrical conductance of the ground surrounding the tank system, and by measuring the magnitude of the stray currents.

H) Existing Corrosion Protection Measures

A corrosion expert will be able to assess the effectiveness of existing corrosion protection measures by examining past records, if available, for a tank system and determining the reliability of these protective measures. The information obtained in this assessment will be used by the corrosion expert to assess the condition of the tank system, as required under Sec. 264.191(b).

Corrosion protection practices using corrosion-resistant materials of construction, coatings, electrical isolation, and cathodic protection are described in the National Association of Corrosion Engineers (NACE) Standards RP-02-85 and RP-01-69, "Recommended Practice--Control of External Corrosion on Metallic Buried, Partially Buried, or Submerged Liquid Storage Systems" (1985) and "Recommended Practice--Control of External Corrosion on Underground or Submerged Metallic Piping Systems" (1983), respectively, and the American Petroleum Institute (API) Publication 1632, "Cathodic-Protection of Underground Storage Tanks and Piping Systems" (1983). Coatings electrically separate tank systems from the surrounding ground media. Wraps perform the same function as coatings, but wraps are not bonded to tank systems and thus must be properly installed to be effective. Electrical isolation devices (e.g., insulated bushings, joints, and couplings) separate a tank system from all nearby underground metal structures. Cathodic-protection methods prevent current from leaving a tank system through the use of either a sacrificial-anode system or an impressed-current system. A sacrificial-anode system, because of the potential difference between the tank and the anode, will discharge electrical current, which is collected by the tank and returned to the sacrificial anode through a metallic connection. Thus, the anode will corrode, not the tank system. An impressed-current system employs a rectifier to produce a direct current that flows from an anode through the ground to a tank system.

The corrosion expert must describe which corrosion protection methods are employed for a particular tank system and judge how effectively these

methods have prevented corrosion in the past. If corrosion protection system records do not exist, the corrosion expert must rely on signs of leakage, the present soil-to-structure potential values, any available ground-water, well water, or soil testing results which may be available, and the estimated age and construction materials of the tank system. Questions that should be answered to judge corrosion protection effectiveness include:

- Has the tank system leaked in the past? Has the structure-to-soil potential remained consistently at or below 850 millivolts negative?

- How complete is the coverage of a coating or wrap? Has this coverage decreased over time from drying, cracking, dissolution? Will the coating or wrap be damaged by spills of the tank's hazardous contents?

- Is the electrical isolation from nearby underground metal structures adequate (i.e., is the tank system electrically isolated from anchor straps, compressors, pumping stations, other metal tanks, and at the junctions of coated and uncoated piping, etc.)? Are the electrical isolation devices damaged in any way? Are the devices appropriate for the needs of the sacrificial-anode system, if applicable?

- How long has a sacrificial-anode system been in place, and have the anodes decreased significantly in size? Is the protective current requirement variable met, requiring that an impressed-current system (not a sacrificial-anode system) be installed? Is the sacrificial-anode system damaged in any way?

- How long has an impressed-current system been in place and have protective current requirements changed over time? Are there any trends in the required protective current (e.g., consistent increases or cycles in protective current requirements)? Is the impressed-current system damaged in any way? Is the impressed-current system properly maintained?

Based on the answers to the above questions, the corrosion expert should be able to assess the extent to which existing corrosion protection measures reduce a tank system's corrosion rate. (The NACE and API references listed above provide additional information on assessing tank system corrosion potential.)

5.4.2 Corrosion Protection Assessment.

Citation

Given information on the environment surrounding a tank system, as obtained under Sec. 264.192(a), a corrosion expert can assess the corrosion protection needs of the system. As stated in Sec. 264.192(a)(3)(ii), the corrosion expert must assess:

> The type and degree of external corrosion protection that are needed to ensure the integrity of the tank system during the use of the tank system or component, consisting of one or more of the following:
> (A) Corrosion-resistant materials of construction such as special alloys, fiberglass reinforced plastic, etc.;
> (B) Corrosion-resistant coating (such as epoxy, fiberglass, etc.) with cathodic protection (e.g., impressed current or sacrificial anodes); and
> (C) Electrical isolation devices such as insulating joints, flanges, etc.

Guidance

Once a corrosion expert has assessed the environmental conditions surrounding a tank system, he/she will have a good idea of the extent of the corrosion protection measures needed. The more corrosion protection measures employed, generally, the greater the degree of protection (e.g., corrosion-resistant coating in combination with cathodic protection can provide close to 100 percent corrosion control). The NACE and API references, NACE RP-02-85, RP-01-69, and API 1632, provide additional information on tank system corrosion protection needs.

A) Corrosion-Resistant Materials of Construction

If a tank system is new, selection of a tank system constructed with or covered with corrosion-resistant materials may be advisable. Manufacturers can provide more information on the corrosion-resistant characteristics of tank system materials and their compatibility with tank contents. A tank system with certain types of protection, e.g., installed within a wrap or a concrete vault, may be considered corrosion-resistant if it does not contact soil or ground water and is isolated from potential sources of current (use electrical isolation devices). A metal tank system constructed of or with a coating on its exterior of corrosion-resistant materials, electrically isolated from the ground media, and provided with a sacrificial anode or impressed-current system would be considered optimally protected.

The most commonly used non-metallic, corrosion-resistant material of construction is fiberglass-reinforced plastic (FRP). Although FRP tanks are usually referred to as a single class, they can be fabricated from a wide variety of resins. The selection of resin depends upon compatibility with the material to be contained and the conditions of storage. FRP tanks can be installed in a wide variety of soil conditions without concern for corrosion. The primary disadvantage of FRP is that it is somewhat more susceptible to installation errors than is steel (e.g., puncture).

B) Corrosion-Resistant Coating

Coatings are thin applications of synthetic or non-synthetic materials, either wrapped, sprayed, or brushed on a tank or piping exterior to prevent corrosion. Coatings isolate the underlying metal structures from contact with the surrounding soil and/or water environment. Linings are materials bonded to the inner shell of a tank to protect against internal chemical corrosion. Table 5-5 lists types of coatings/linings and the chemicals with which these materials are generally incompatible. Any damage to a coating, however, can produce accelerated local corrosion on

TABLE 5-5

COATING/LINING VS. CHEMICALS

Coating/Lining Material	Generally Incompatible With
Alkyds	Strong mineral acids, strong alkalies, alcohol, ketones, esters, aromatic hydrocarbons
Chlorinated rubbers	Organic solvents
Coal tar epoxy	Strong organic solvents
Epoxy (amine cured, polyamide cured, or esters)	Oxidizing acids (nitric acid), ketones
Polyesters	Oxidizing acids, strong alkalies, mineral acids, ketones, aromatic hydrocarbons
Silicones	Strong mineral acids, strong alkalies, alcohols, ketones, aromatic hydrocarbons
Vinyls (polyvinyl chloride-PVC)	Ketones, esters, aromatic hydrocarbons

Source: New York State Department of Environmental Conservation, "Technology for the Storage of Hazardous Liquids--A State-of-the-Art Review" (January 1983), p. 36.

the exterior of a metal tank system, since the localized areas of damage create points on the tank system at which stray currents or corrosive chemicals in the soil, accumulated leaked wastes, or water can cause concentrated corrosive attack of the tank system or component. In its standard ratified on March 29, 1985, ("Recommended Practices for Control of External Corrosion on Metallic Buried, Partially Buried, or Submerged Liquid Storage Systems," NACE Technical Practices Committee), NACE recommends that the following precautions be taken to avoid problems due to damaged or poor coatings caused by improper application or improper tank installations:

- Handling — Damage to coating shall be minimized by careful handling and by using proper cradles and slings.

- Inspection — Qualified personnel shall monitor and inspect each phase of the coating operation, including surface preparation. Quality control and inspection programs should be developed.

  A coating shall be tested immediately prior to installation of the system by using appropriate holiday detectors and visual inspection. All detected coating damage shall be repaired.

- Installation — The excavation shall be free of any material that may damage the coating.

  To prevent damage to the tank or coating, equipment for installing the tank shall be of adequate size to raise and lower the tank without dragging or dropping. Similar care shall be given to the piping.

  If the tank is installed on a concrete slab, it shall be separated from the slab by at least 6 in. (15 cm) of sand or other approved homogeneous backfill.

Anchor straps and ground anchors, if used, shall be installed in such a manner that they do not damage the coating and are electrically isolated from the tank. If necessary, a separate cathodic protection system may be applied to the straps.

The backfill shall consist of clean sand or other selected fill that is free of organic material, rocks, debris, and other sharp objects.

The backfill shall be deposited carefully around the buried parts of the tank to a thickness of at least 1 ft (30 cm). Avoid damage to the coating, especially where tamping is required. See NFPA 30 and state or local codes for depth of cover required.

A factory-installed coating is generally preferable to a field-installed coating. Coating and lining manufacturers can provide information on the corrosion-resistant characteristics of their manufactured materials. NACE publications RP-02-85 and RP-01-69 provide additional information on desirable coating characteristics and on coating handling, inspection, and installation techniques, as well as references on coatings.

C) Cathodic Protection

Cathodic protection is the most effective means of corrosion protection available and is often used in conjunction with other corrosion protection measures. As discussed in Section 5.4.1 of this document, cathodic protection can consist of installing a sacrificial-anode system or an impressed-current system. In general, impressed-current systems require more maintenance than sacrificial-anode systems and can cause additional problems by generating stray currents.

Some sites may require that cathodic-protection systems be designed to meet site-specific conditions, particularly at locations with very low or

very high soil resistivities. Cathodic-protection devices, if needed, must always be placed inside the confines of any lined excavation (the lining acts as an insulator) or within a concrete vault.

Based on the information obtained under Sec. 264.192(a), the corrosion expert should be able to evaluate quantitatively the cathodic-protection needs of a tank system to ensure structural integrity during the system's use. Additionally, under the requirements of Sec. 264.192(f) and (g), the owner/operator is required to provide the type and degree of corrosion protection recommended by the independent corrosion expert, or required by the EPA Regional Administrator, to have the installation of field-fabricated corrosion-protection systems supervised by an independent corrosion expert, and to obtain and keep on file at the facility written certifications for the design, installation, and repairs to the system.

1) SACRIFICIAL ANODE

This cathodic-protection method employs a sacrificial anode, such as magnesium or zinc, in electrical contact with the metal structure to be protected. These anodes may be buried in the ground nearby or attached to the surface of a metal tank system. Corrosion of the sacrificial-anode material produces the necessary low-level electric current. A typical sacrificial-anode, cathodic-protection system for underground tanks and piping is illustrated in Figure 5-9. A sacrificial-anode system can either be purchased from a tank manufacturer with the anodes already attached to a tank (see Figure 5-10) or connected to a tank following initial emplacement.

2) IMPRESSED CURRENT

This cathodic-protection method employs direct current (DC) provided by an external current source. This current is passed through the system by the use of anodes, such as carbon, non-corrodible alloys, or platinum. These anodes are buried in the ground (in the case of underground structures) or otherwise suspended in the soil

Figure 5-9

Sacrificial Anode Cathodic Protection

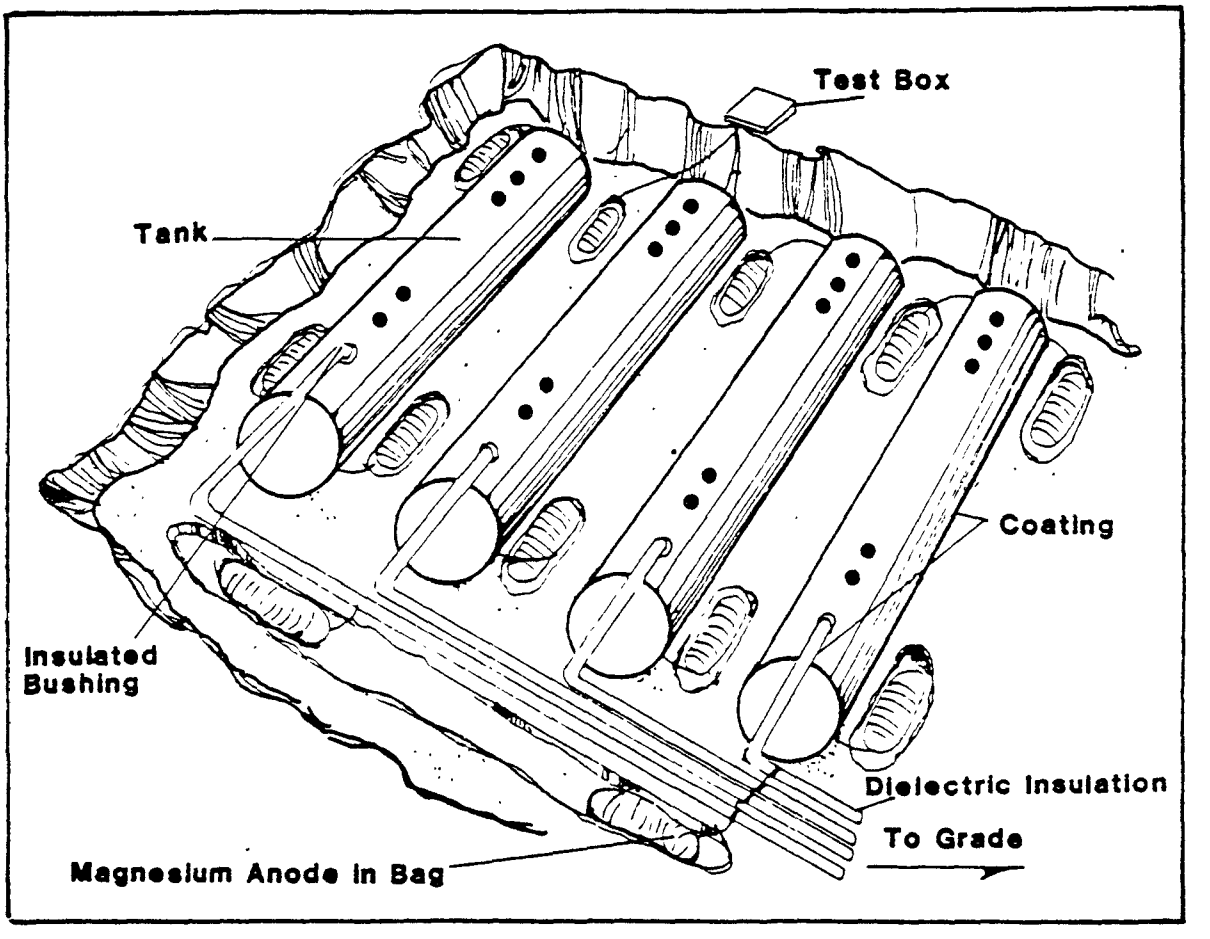

Source: Suggested Ways to Meet Corrosion Protection Codes for Underground Tanks and Piping, The Hinchman Company, Detroit, MI, 1981.

FIGURES ARE FOR ILLUSTRATIVE PURPOSES ONLY. THEY ARE NOT INTENDED FOR USE AS CONSTRUCTION DRAWINGS.

Figure 5-10
Factory Installed Sacrificial Anode

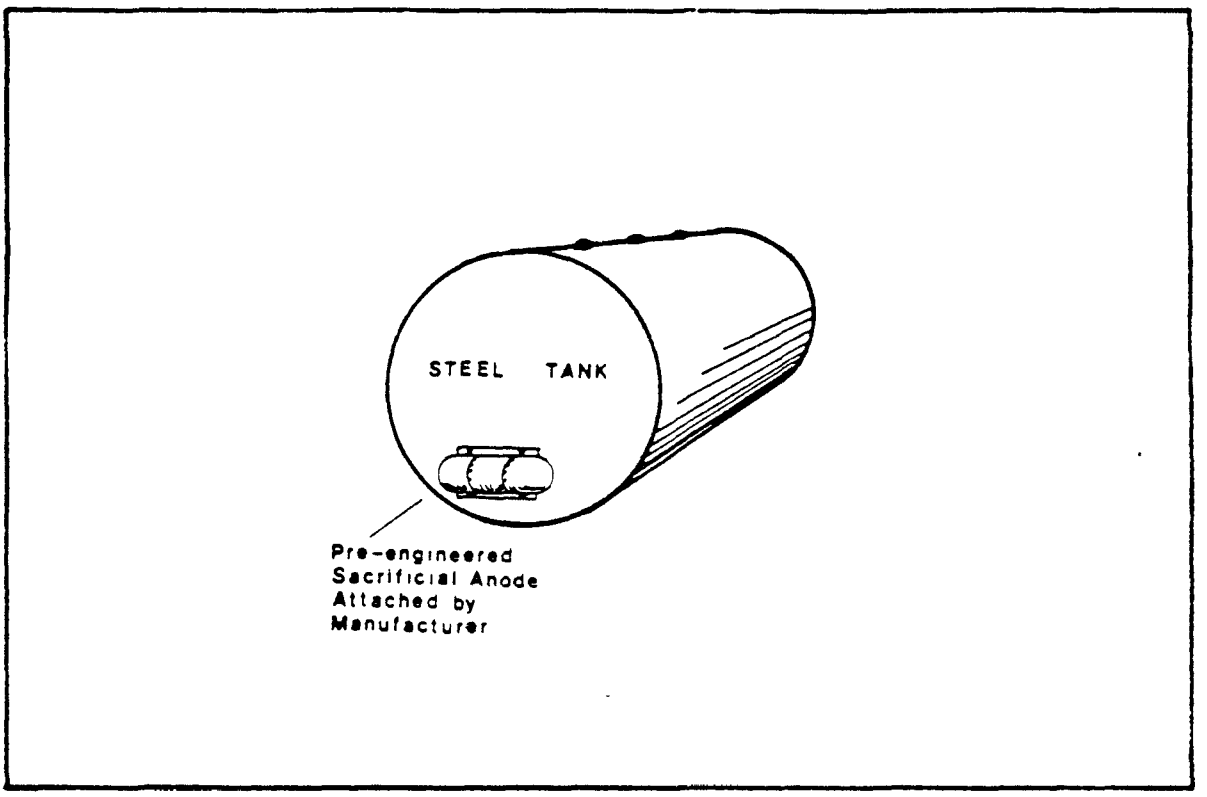

FIGURES ARE FOR ILLUSTRATIVE PURPOSES ONLY. THEY ARE NOT INTENDED FOR USE AS CONSTRUCTION DRAWINGS.

electrolyte and connected to an external power supply. An impressed-current system can be regulated to meet any level of soil aggressiveness but, being a highly dynamic design, requires regular supervision and periodic maintenance. Generally, an impressed-current system should be inspected at least two times a year, including a check of soil resistivity each time. A typical impressed-current system for underground tanks and piping is illustrated in Figure 5-11.

An impressed-current system can be installed at any time during the life of a tank system, and it can be adjusted to meet changing protective current needs. When an impressed-current system is operating, all metal structures within its electrical field must be bonded to the electric current; any unbonded metal may corrode under the influence of the impressed current. Nearby gas, water, or utility lines must be protected from stray currents which may be generated by the impressed-current system. These potential problems may be eliminated by an investigation of the impact of the system on nearby structures before its operation. A corrosion expert should conduct this investigation and design and implement any required protective measures. When an impressed-current system is attached to a used tank system, it is especially important that the cathodic-protection mechanism's performance be regularly inspected and monitored; otherwise, corrosion on the protected tank system or adjacent metallic structures may be accelerated inadvertently. Damage to wiring, electrical connections, or operator error may cause the generation of stray currents.

D) Electrical Isolation Devices

Electrical isolation devices remove nearby metal structures from the cathodic-protection circuit. Such devices isolate a tank electrically from any metallic anchoring, piping, and pump(s). Electrical isolation is necessary with a sacrificial-anode system because the amount of metal to be protected must be limited to maximize the corrosion protection. As stated earlier, however, electrical bonding, rather than electrical isolation, should be used for an impressed-current system.

Figure 5-11

Impressed Current Cathodic Protection

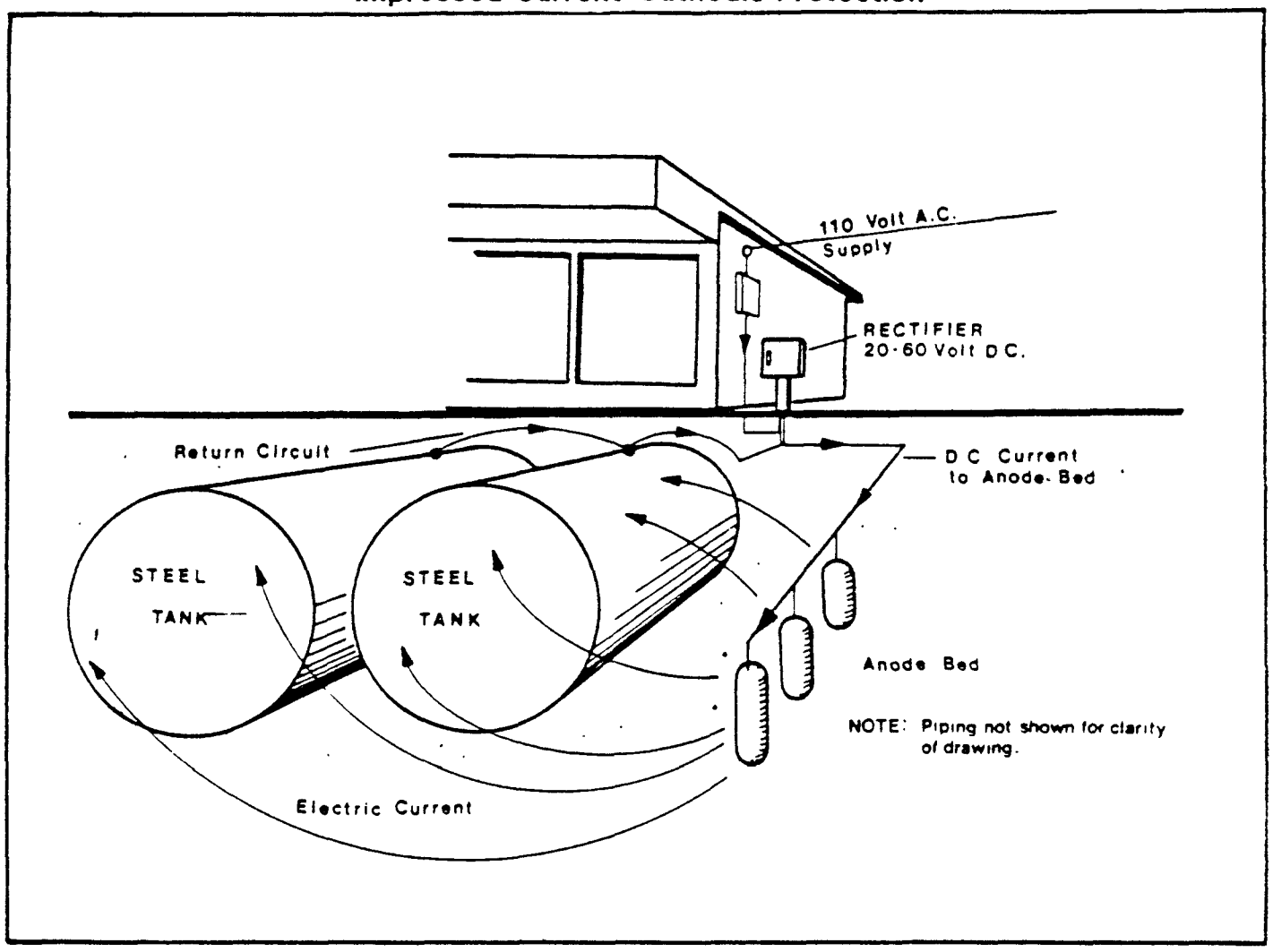

Source: Suggested Ways to Meet Corrosion Protection Codes for Underground Tanks and Piping, The Hinchman Company, Detroit, MI, 1981.

FIGURES ARE FOR ILLUSTRATIVE PURPOSES ONLY. THEY ARE NOT INTENDED FOR USE AS CONSTRUCTION DRAWINGS.

Isolation devices used to maintain effective grounding and the desired isolation include electrically resistive envelopes, flange assemblies, bushings, prefabricated insulating joints, unions, and couplings. NACE Standard RP-01-77, "Recommended Practice--Mitigation of Alternating Current and Lightning Effects on Metallic Structures and Corrosion-Control Systems," provides additional information on this subject. A corrosion expert who is familiar with the use of electrical isolation devices will be able to decide where and how a tank system's electrical isolation needs to be upgraded.

5.5 PROTECTION FROM VEHICULAR TRAFFIC

Citation

Because portions of an underground tank system may be subject to the damaging effects of vehicular loads, Sec. 264.192(a)(4) requires for new tank systems that the owner or operator assess the design and/or operational measures that protect a tank system from these loads. As stated in this section, the owner or operator must include in the written assessment the following information:

> For underground tank system components that are likely to be adversely affected by vehicular traffic, a determination of design or operational measures that will protect the tank system against potential damage;....

Guidance

In order to avoid premature structural failure, a tank system should be designed and installed so that it can support expected vehicular loads. Cover in traffic areas should be a minimum of 36 inches--30 inches of compacted backfill and 6 inches of asphaltic concrete are suggested. (An alternative is not less than 18 inches of compacted backfill, plus at least 6 inches of reinforced concrete or 8 inches of asphaltic concrete.) A larger tank may require even greater coverage. Asphaltic or reinforced concrete paving over tanks in traffic areas should extend at least one foot beyond the perimeter of

a tank in all directions. An underlying synthetic, impermeable layer below the pavement is recommended. If the depth of cover is greater than a tank's diameter, the tank manufacturer should be consulted to determine if tank structural reinforcement is needed. A minimum horizontal backfill clearance in all directions of 12 inches is recommended for steel tanks, and 18 inches is recommended for FRP tanks. ("Installation of Underground Petroleum Storage Systems," API Publication 1615 (November 1979), pp. 3-6. See also the Petroleum Equipment Institute (PEI) Publication PEI/RP100-86, "Recommended Practices for Installation of Underground Liquid Storage Systems.")

Operational measures that avoid excessive vehicular loads on a tank system include instituting a weight limit on vehicles traveling above a tank system and/or constructing guardrails or barricades around tank system components susceptible to damage from such loads. The professional engineer who reviews and certifies the written assessment for the tank system design must be able to judge the effectiveness of the methods used to prevent damage from vehicular traffic.

5.6 FOUNDATION LOADS AND ANCHORING

Citation

A tank system's foundation must be able to support the load of a full tank, and tank anchoring must prevent flotation and dislodgment. Section 264.192(a)(5)(i) and (ii) state that the owner or operator of a new tank system must ascertain that:

> (i) Tank foundations will maintain the load of a full tank;
> (ii) Tank systems will be anchored to prevent flotation or dislodgment where the tank system is placed in a saturated zone, or is located within a seismic fault zone subject to the standards of Sec. 264.18(a);....

Guidance

The owner or operator and the independent, qualified, registered professional engineer must be familiar with the characteristics of the

surrounding geological environment and the history of similar structures in the vicinity. This requirement applies to all types of tank systems: aboveground, onground, inground, and underground. After uniform settlement occurs, piping must not be strained. Additional information on assessing foundation integrity is contained in API Standards 620 and 650, "Recommended Rules for Design and Construction of Large, Welded, Low-Pressure Storage Tanks" (1982), Appendix C, and "Welded Steel Tanks for Oil Storage" (Revised 1984), Appendix B. For assessing structural integrity in concrete tanks, consult the American Concrete Institute's (ACI) Publication 350R-83, "Concrete Sanitary Engineering Structures, Section 2.4--Types of Foundations."

Underground or inground tanks may be subject to flotation and/or dislodgment when placed in zones that may be saturated at some time from seasonal precipitation changes, a floodplain location, stormwater runoff, etc. The anchoring systems for these tanks must be assessed for adequacy and structural integrity. Manufacturers' recommendations on anchoring techniques should be followed. Tank vents and other openings that are not liquid-tight must be located above maximum water level.

Normal paving and backfill usually provide adequate restraint for tanks. Because of their additional weight, steel tanks are less susceptible to flotation than FRP tanks, and smaller tanks are generally less buoyant than larger tanks. If there is any question on whether or not weighting or anchoring is necessary, a professional engineer should estimate expected ground-water levels and calculate buoyant forces. (Buoyancy tables for FRP tanks are available in the Owens-Corning "Fiberglass Underground Tank Installation Techniques Manual" (September 1984). Consult tank manufacturers for buoyancy information on steel tanks. See ACI, 350R-83, "Concrete Sanitary Engineering Structures" (September 1984) for information on issues concerning weighting or anchoring in concrete structures.)

If additional anchoring is necessary, buoyancy may be offset by the use of hold-down pads, prefabricated deadmen, or mid-anchoring. These devices (see Figure 4-1) are described as follows:

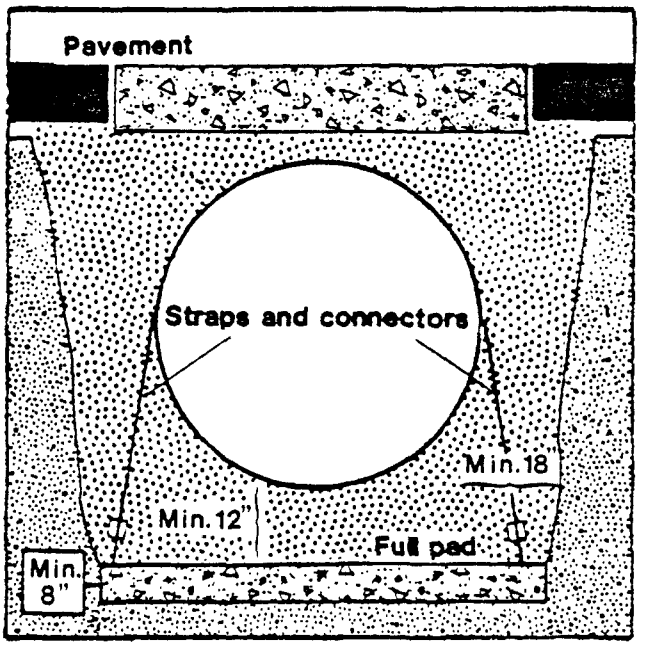

Hold-down pad

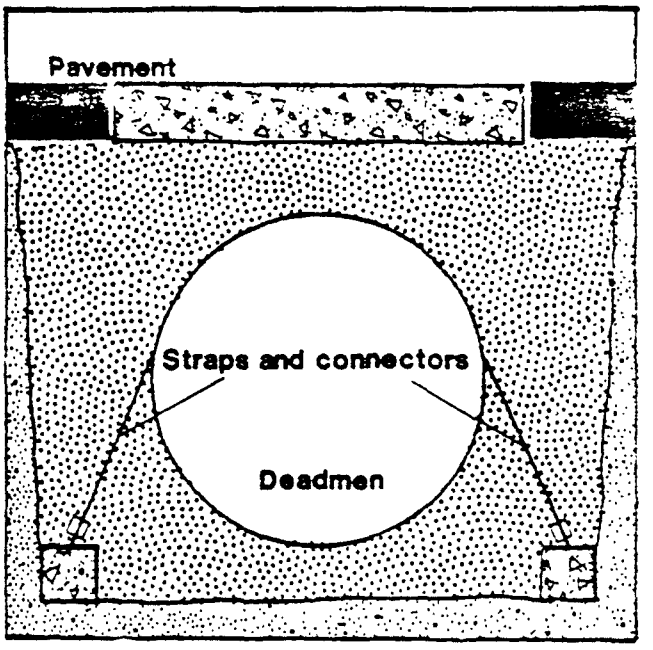

Deadmen anchors

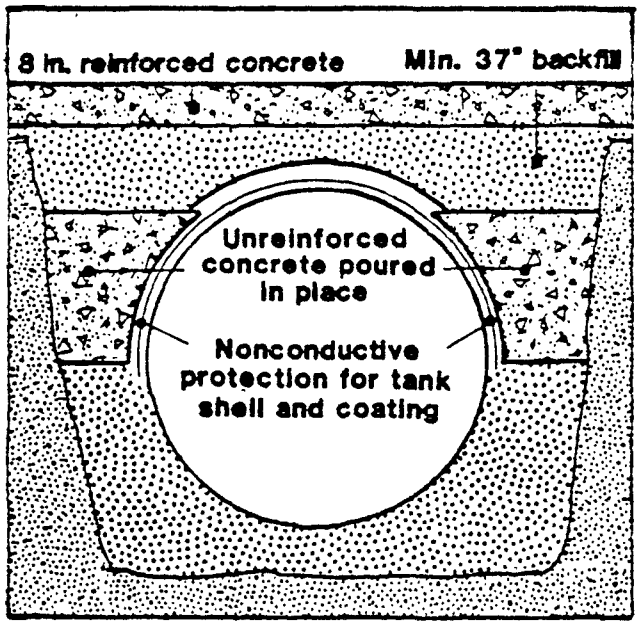

Mid-anchoring

Figure 5-12
Anchoring Techniques

FIGURES ARE FOR ILLUSTRATIVE PURPOSES ONLY. THEY ARE NOT INTENDED FOR USE AS CONSTRUCTION DRAWINGS.

- Hold-down pads are reinforced concrete pads that provide firm foundations for tanks. The pads also offset buoyancy of the tanks. These pads extend 18 inches beyond the sides of tanks and one foot beyond the ends. Pad thickness is determined by maximum water level, tank size and weight, burial depth, and paving.

- Deadmen anchors are beams of reinforced concrete with straps and cables attached. Anchoring straps and cables must not damage tanks; these devices may be separated from tanks with padding (e.g., by using portions of rubber tires.)

- Mid-anchoring consists of placing unreinforced concrete over the tops of tanks. Backfill should be placed above these tanks and reinforced concrete at grade. Tanks must be covered with nonconductive material to maintain electrical isolation for cathodically-protected tanks and to protect coatings and tank shells from damage from the concrete.

All anchoring devices must be adequately protected from corrosion and other forms of deterioration, and they must not damage the tank system. Anchoring straps must be uniformly tight and spaced so that the tank load will be evenly distributed. Anchoring straps on a steel tank must be separated from the tank by a pad made of inert material. The pad should be wider than the hold-down straps to prevent coating scratches and to ensure electrical isolation of the tank and its anchoring. FRP straps must be aligned <u>on</u> the tank ribs, not between the ribs.

Any tank system in a location where compliance with Sec. 264.18(a) must be demonstrated (locations in a fault zone and therefore subject to earthquakes) is required under Sec. 264.192(a)(5)(ii) to be anchored appropriately to prevent dislodgment (see Appendix VI of Sec. 264, "Political Jurisdictions in Which Compliance with Sec. 264.18(a) Must Be Demonstrated"). Anchoring methods that may be used are the same as those described in this section to prevent flotation. Appendix E of API Standard 650, "Welded Steel Tanks for Oil Storage" (Revised 1984), Appendix E, provides information on

seismic design for storage tanks and piping, including details on anchoring specifications and calculations. This is a highly technical discussion of design parameters that is not appropriate for includsion in this document except by reference.

5.7 PROTECTION AGAINST FROST HEAVE

Citation

New tank systems must be protected against the potential damaging effects of frost heave, as stated in Sec. 264.192(a)(5)(iii):

> Tank systems will withstand the effects of frost heave.

Guidance

Tank systems that are underground or partially underground may be subject to forces from frost heave and thaw instability in colder climates. Designs must be adequate to ensure that tanks and all ancillary equipment are not damaged from these forces.

The owner or operator must first predict what the expected frost level (depth) will be in the areas where tanks are or will be installed. This information is available from the soil conservation service of the state departments of agriculture. These services produce soil surveys with county-wide information on frost potential and depths.

The greatest potential problems from frost and thaw damage are anticipated to be in the piping systems, since they are generally at shallower depths and are weaker structures than the tanks. Welding rather than screw threads for piping joints is recommended in very cold climates. Expansion and contraction of piping joints from thermal effects will otherwise cause slow leaks to occur. Devices which can be used to protect against frost uplift are swing joints or flexible joints that are welded or flanged to the rest of the pipe.

Thaw instability can cause problems with either piping or with the tank itself. The instability occurs when a tank and/or its ancillary equipment is installed in soil which retains frozen water in its matrix, e.g., in organic silts. If the ice melts, the soil matrix will lose a significant amount of strength, causing the support for the tank system to fail, resulting in leakage. A better understanding of soil conditions and the potential for frost can allow precautions to be taken which will minimize the potential for damage due to thaw instability.

For new tanks, or for used tanks which are to be reinstalled, the use of pea gravel, sand, or some other highly permeable material as backfill allows most infiltrating water to drain out of the tank excavation, thus minimizing the potential for frost problems. Tanks and ancillary equipment should be located, if possible, below the frost depth and straight, welded piping should be installed in an area with permafrost because leak detection is impossible under such conditions.

For tanks that are already in the ground, if the tank systems have withstood the impact of frost over a period of several years without leak damage, that documented experience may be one indication that the systems may be adequately protected against frost heave. If proper design cannot be confirmed through leak tests and other evaluations, the owner or operator, with the possible assistance of an independent, qualified, registered professional engineer, should assess the available frost protection alternatives. Such alternatives as the installation of resistance heating wires near a tank system or installation of swing joints can either prevent frost from occurring near the tank system or enable the system to withstand the forces of frost heave so that the system will not leak.

As with all construction and installation operations, the owner or operator should become familiar with local codes to ensure that the chosen protective method conforms to them.

5.8 SUMMARY OF MAJOR POINTS

This subsection summarizes the information covered in this section and may be used in assuring the completeness of a Part B permit application. It can also be helpful in planning, preparing, and verifying the adequacy of the tank system.

- o <u>Dimensions and Capacity</u>

  - -- Are all dimensions including wall thickness of each tank and related appurtenances clearly indicated and/or displayed in the scale drawings?

  - -- Is the capacity of each tank clearly indicated (nominal and/or maximum capacity)?

  - -- Were any field modifications made that affect tank capacity?

  - -- Was the gauge table field-verified and modified, as necessary, to reflect installed conditions accurately?

  - -- Is the manufacturer's specification sheet and gauge chart included in the permit application for all preconstructed tanks?

- o <u>Feed Systems, Safety Cutoff, Bypass Systems, and Pressure Controls</u>

  - -- Has a description of the tank feed systems, safety cutoff, bypass systems, and pressure controls been included in the permit application?

  - -- Does the equipment meet construction guidelines and standards designed to prevent:

    - Explosion or implosion of tanks,
    - Fire,
    - Emissions of hazardous vapors, and
    - Spillage of hazardous material due to overfilling of vessels or drainage from product transfer hoses?

  - -- Does the description of the equipment in the permit application adequately verify compliance with pertinent construction standards?

- Diagram of Piping, Instruction, and Process Flow

  -- Is the tank system diagram clear and does it show all relevant tank system components?

  -- Is satisfactory documentation included in the permit application to describe process flow characteristics?

- External Corrosion Protection

  -- Does the facility have adequate records of tank system materials of construction and of corrosion protection systems?

  -- Have nearby tank systems been affected by corrosion?

  -- Is the corrosion expert able to assess adequately the corrosion potential of the environment surrounding the tank system? What is likely to cause (or has caused) corrosion of the tank system?

  -- Can the corrosion expert determine the type and degree of corrosion protection needed to ensure tank system integrity during its use?

  -- Does the facility maintain comprehensive maintenance and repair records? (This is particularly important where impressed-current systems are operating.)

  -- Has the owner or operator provided the type and degree of corrosion protection recommended by an independent corrosion expert, based on the information provided in the assessment?

  -- Has the installation of any field-fabricated corrosion protection system been supervised by an independent corrosion expert?

- Protection From Vehicular Traffic

  -- Have the design and/or operational measures that protect a tank system from the damaging effects of vehicular loads been assessed?

- Foundation Loads and Anchoring

  -- Has it been determined that the tank foundation will maintain the load of a full tank?

  -- Are tank systems anchored to prevent flotation or dislodgement if placed in a saturated zone or seismic fault zone?

- Protection Against Frost Heave

  -- Have design precautions been taken so that the tank system withstands the effects of frost heave?

In addition, see Appendix A, "Completeness Checklist," to verify compliance with the requirements of this section.

6.0 INSTALLATION OF NEW TANK SYSTEMS

Section 264.192(b-g) requires an owner or operator to ensure that proper handling procedures are used to prevent damage to a new tank system or a new component at the time of installation. Should damage occur during the course of an installation, the owner or operator must remedy it before the system is fully installed or placed in use. The Sec. 264.192(b-g) requirements apply to new tank systems and components. The terms "new tank system" and "new tank component" also include reinstalled and replacement tank systems or components. The professional engineers who certify a new, permitted tank system's design and those who supervise, new tank system and component installation are required to submit written certification statements attesting that proper installation procedures were used.

6.1 PROPER HANDLING PROCEDURES

Citation

As specified in Sec. 264.192(b), the owner or operator of a new tank system or a new component must:

> ...ensure that proper handling procedures are adhered to in order to prevent damage to the system during installation. Prior to covering, enclosing, or placing a new tank system or component in use, an independent, qualified installation inspector or an independent, qualified, registered professional engineer, either of whom is trained and experienced in the proper installation of tank systems or component [sic], must inspect the system for the presence of any of the following items:
>
> 1) Weld breaks;
> 2) Punctures;
> 3) Scrapes of protective coatings;
> 4) Cracks;
> 5) Corrosion; and
> 6) Other structural damage or inadequate construction/installation.

All discrepancies must be remedied before the tank system is covered, enclosed, or is placed in use.

Guidance

The intent of the Sec. 264.192(b) regulation is to ensure that new tank systems and components are properly handled during installation to prevent damage that may lead to or cause a release of waste to the surrounding environment. This is to be accomplished by inspection of tank installation procedures by a qualified tank and piping installation inspector or a qualified, registered professional engineer. The installation inspection applies to both new tank systems and components, where component means either the tank or its ancillary equipment.

The regulations require that an independent qualified installation inspector or an independent qualified, registered professional engineer, who is trained in the proper installation procedures for new tank systems, inspect the system for damage prior to covering, enclosing, or placing it in use. (Refer to Section 10.0 of this document for additional guidance on inspection procedures.)

A) Installation Inspectors

The owner or operator responsible for installing a new tank system is required to obtain the services of a qualified inspector. Two sources for such services are manufacturers' installation inspectors and independent, registered professional engineers.

Upon request, most reputable tank manufacturers or major tank system suppliers will provide a qualified installation inspector who is trained in the proper installation procedures for a procured tank system. Such individuals are trained by the vendor and have a working knowledge of the characteristics of the tank system being installed, as well as knowledge of proper backfilling and compaction procedures. Since such a person is usually an employee of the tank system vendor, an owner or operator should obtain written documentation regarding the qualifications of the installation inspector and the services that will be provided. Most

states do not yet have a licensing or certification program for tank system installation inspectors.

B) Independent, Qualified, Registered Professional Engineers

If an independent installation inspector is not retained by an owner or operator to supervise tank system installation, an independent, qualified professional engineer may certify that proper installation practices are followed. Because the regulations require the engineer to be independent, he/she cannot be employed by the tank system owner or operator, in order to avoid a conflict of interest or the appearance of such a conflict. The engineer should be registered to practice in the state in which the new tank system or component is to be installed. Most professional engineers will provide the owner or operator with a resume that summarizes relevant training, experience, and special qualifications, such as previous work in soils engineering, corrosion control, etc. Generally, civil, chemical, and mechanical engineers are most likely to have had appropriate tank system training and experience. Some consulting engineering firms also can be retained to supply professional engineers who are qualified to provide one or more of the services required.

All 50 states and the District of Columbia have laws that govern the practices of professional engineers. In most states, registered professional engineers are required to stamp or seal the certification documents they provide. The engineers are legally responsible for such certifications.

C) Installation Inspection Procedures

The Sec. 264.192(b) regulations require an installation inspector or a registered professional engineer to inspect a new tank system or component for weld breaks; punctures; scrapes of protective coatings; cracks; corrosion; and other structural damage or inadequate construction or installation. It is advisable to inspect for these deficiencies within the context of normal tank installation procedures, as described in this section.

Normally, a tank manufacturer or supplier arranges for the transport of a new tank to the installation site and retains the responsibility for the tank until such time as it is delivered and accepted by the buyer. It is advisable to have the installation inspector observe the arrival of a tank at a site and its off-loading from the tank transporter. While the tank is still on the transport vehicle, an inspector should visually examine the tank for:

- Weld breaks (steel tanks);
- Punctures (all tank types);
- Abrasions affecting protective coatings and/or linings (all tank types);
- Cracks (all tank types); and
- Corrosion (steel tanks), internal and external.

Preinstallation handling of tank system components, particularly the tank itself, must be done carefully so that the components are not scraped, dented, or cracked. Coatings and welds on steel tanks and the structural integrity of fiberglass and concrete tanks are particularly vulnerable to damage from improper handling.

A tank should never be dropped, handled with a sharp object, dented, dragged, or rolled. The proper way to move a tank is to lift it, using lifting lugs installed by the tank manufacturer. Larger tanks have multiple lifting lugs, and all of them should be used. Cables or chains of adequate length should be attached to the lifting lugs, and guidelines should be attached to the ends of a tank in order to direct its movement (see Figure 6-1). The intended distribution of a tank load among lifting lugs should be included in a tank manufacturer's installation instructions. Generally, however, an angle of not less than 30 degrees for tanks is desirable. Lifting hooks should fit the lifting lugs and not be oversized. Shackles should be used if lifting hooks are too large.

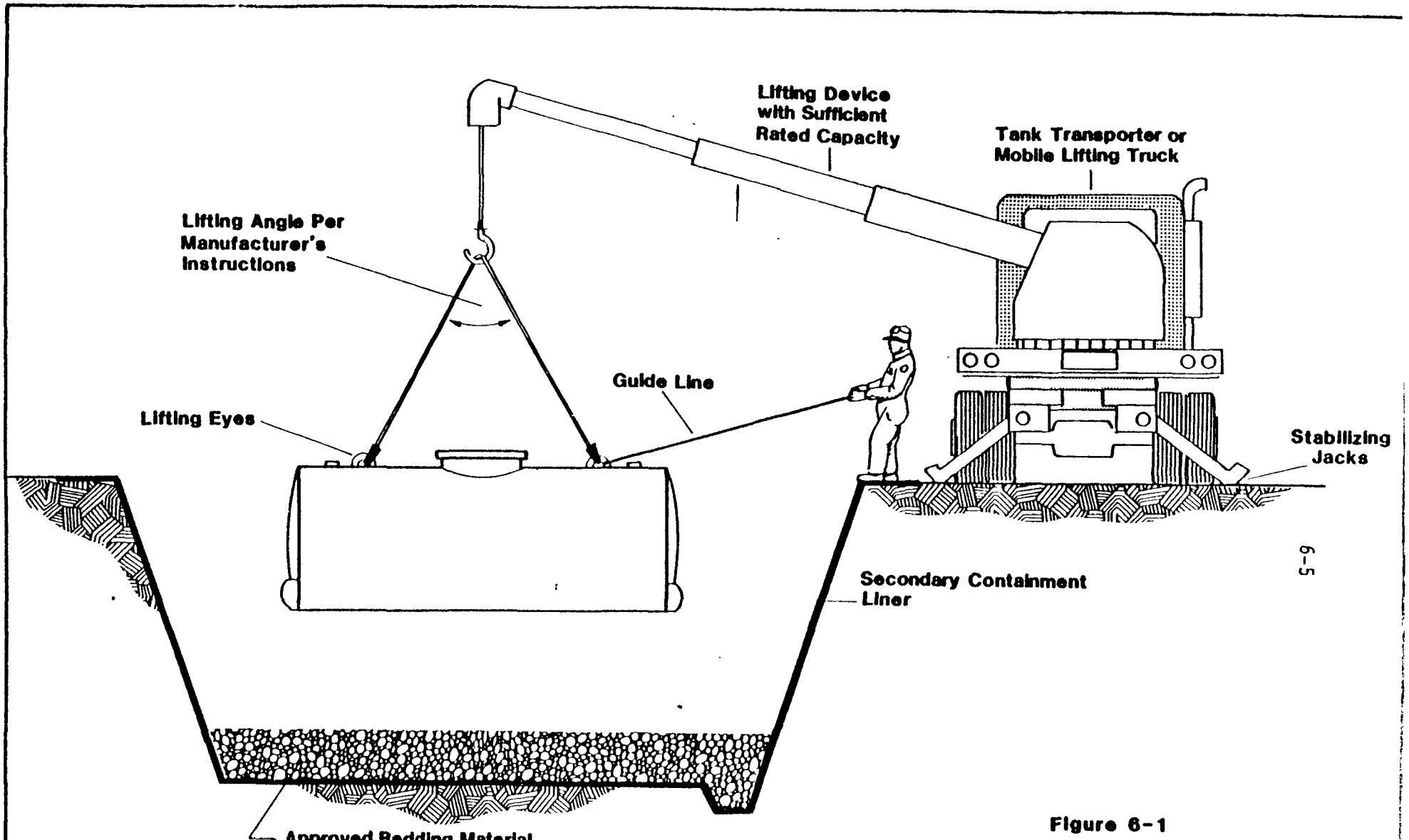

Figure 6-1

Proper Tank Lifting and Placement

FIGURES ARE FOR ILLUSTRATIVE PURPOSES ONLY. THEY ARE NOT INTENDED FOR USE AS CONSTRUCTION DRAWINGS.

A spreader bar to separate the hoisting chains or cables at the appropriate angle may be used, if necessary. Cables, chains, or slings should not be wrapped around a tank shell.

Fiberglass reinforced-plastic (RFP) tanks are generally more vulnerable to damage (such as puncture holes) from improper handling than are steel tanks. Thus, an inspector should be particularly alert to any instance of mishandling prior to or during the installation of an FRP tank.

Before a tank is moved, the capacity and reach of hoisting equipment should be checked. A tank should only be placed on smooth ground that is free of rocks or other hard, sharp objects that could puncture or unduly stress the tank. Rolling movement of a tank lying on the ground prior to installation should be prevented. Refer to "Recommended Practices for Installation of Underground Liquid Storage Systems," Petroleum Equipment Institute, Document PEI/RP100-86, for more information on moving tanks.

Immediately after unloading, the tightness of a tank should be demonstrated (see Section 6.3 below). The visual inspection(s) and tightness test will permit the inspector to identify the defects listed in Sec. 264.192(b).

Damage and defects found during the installation inspection or during the tightness test tends to occur at points of high stress, e.g., at seams, lugs, points of contact with the ground, couplings, etc. The inspector should note the occurrence of any high-dynamic stresses during off-loading which, for example, can be caused by placing one tank end on the ground before the other end. In this instance, uneven placement could cause the first end on the ground to bear an unexpectedly large load for a short time, thus damaging the tank. The presence of damage or defects can cause, at worst, tank system structural failure. Without repairs, weld breaks and cracks can render a new tank system useless in a short time. Less severe tank system failure may occur from excessive hoisting, causing metal fatigue, or from inadequate corrosion protection caused by damage to a tank's coating or to its cathodic-protection system or to the electrical

isolation devices. Inground and underground tank systems and components, in particular, must be inspected thoroughly before installation because the portions in contact with backfill are generally inaccessible to routine visual inspections after emplacement.

Excavation design is also critical to ensure continued tank integrity. The installation inspector or professional engineer should ascertain that the excavation side slope, depth of excavation, and distance from nearby structures is appropriate. Care must be taken to avoid undermining nearby foundations during construction or afterwards in order to avoid transferring a foundation's load onto the tank system. See Figure 6.2 for recommended distances from the nearest foundation.

After an inspection of the excavation for potential sources of tank system damage has been completed and any deficiencies corrected, a tank may be lifted into its service position. The procedures described above for lifting and lowering a tank into place also apply to this operation. The tank must be lowered evenly and placed squarely on the receiving bedding or cradle, depending on the secondary containment design, without scratching, abrading, or otherwise damaging the tank (see Figure 6-3).

An inspector should examine a tank following the attachment of anchoring devices to ensure that these devices do not damage the tank's protective coating. A checklist of inspection details, including at least the items listed in Sec. 264.192(b), should be completed by the inspector. (See Figure 6-4.)

D) Repairs

Sec. 264.192(b) also requires that any damage to a new tank system or component must be remedied prior to installation. Normally, such repairs are the responsibility of the supplier or an authorized representative. The tank owner or operator is under no obligation to use a tank system or component that does not meet specifications.

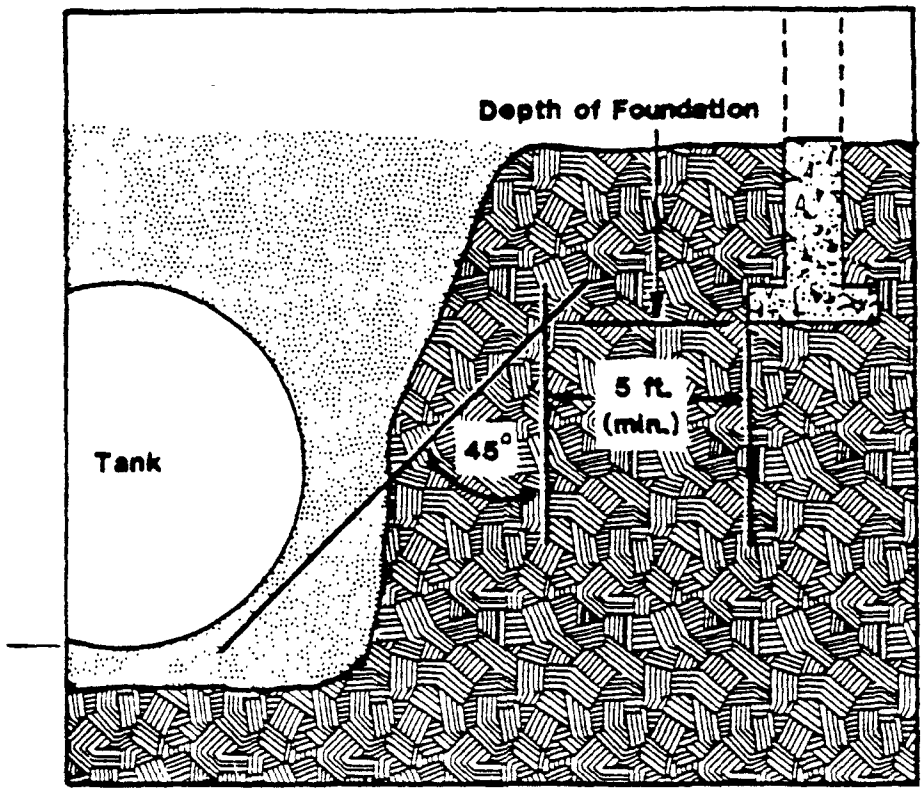

Figure 6-2

Excavation Design: Recommended Distance from the Nearest Foundation

FIGURES ARE FOR ILLUSTRATIVE PURPOSES ONLY THEY ARE NOT INTENDED FOR USE AS CONSTRUCTION DRAWINGS.

6.0 INSTALLATION OF NEW TANK SYSTEMS

Section 264.192(b-g) requires an owner or operator to ensure that proper handling procedures are used to prevent damage to a new tank system or a new component at the time of installation. Should damage occur during the course of an installation, the owner or operator must remedy it before the system is fully installed or placed in use. The Sec. 264.192(b-g) requirements apply to new tank systems and components. The terms "new tank system" and "new tank component" also include reinstalled and replacement tank systems or components. The professional engineers who certify a new, permitted tank system's design and those who supervise, new tank system and component installation are required to submit written certification statements attesting that proper installation procedures were used.

6.1 PROPER HANDLING PROCEDURES

Citation

As specified in Sec. 264.192(b), the owner or operator of a new tank system or a new component must:

> ...ensure that proper handling procedures are adhered to in order to prevent damage to the system during installation. Prior to covering, enclosing, or placing a new tank system or component in use, an independent, qualified installation inspector or an independent, qualified, registered professional engineer, either of whom is trained and experienced in the proper installation of tank systems or component [sic], must inspect the system for the presence of any of the following items:
>
> 1) Weld breaks;
> 2) Punctures;
> 3) Scrapes of protective coatings;
> 4) Cracks;
> 5) Corrosion; and
> 6) Other structural damage or inadequate construction/installation.

All discrepancies must be remedied before the tank system is covered, enclosed, or is placed in use.

Guidance

The intent of the Sec. 264.192(b) regulation is to ensure that new tank systems and components are properly handled during installation to prevent damage that may lead to or cause a release of waste to the surrounding environment. This is to be accomplished by inspection of tank installation procedures by a qualified tank and piping installation inspector or a qualified, registered professional engineer. The installation inspection applies to both new tank systems and components, where component means either the tank or its ancillary equipment.

The regulations require that an independent qualified installation inspector or an independent qualified, registered professional engineer, who is trained in the proper installation procedures for new tank systems, inspect the system for damage prior to covering, enclosing, or placing it in use. (Refer to Section 10.0 of this document for additional guidance on inspection procedures.)

A) Installation Inspectors

The owner or operator responsible for installing a new tank system is required to obtain the services of a qualified inspector. Two sources for such services are manufacturers' installation inspectors and independent, registered professional engineers.

Upon request, most reputable tank manufacturers or major tank system suppliers will provide a qualified installation inspector who is trained in the proper installation procedures for a procured tank system. Such individuals are trained by the vendor and have a working knowledge of the characteristics of the tank system being installed, as well as knowledge of proper backfilling and compaction procedures. Since such a person is usually an employee of the tank system vendor, an owner or operator should obtain written documentation regarding the qualifications of the installation inspector and the services that will be provided. Most

states do not yet have a licensing or certification program for tank system installation inspectors.

B) Independent, Qualified, Registered Professional Engineers

If an independent installation inspector is not retained by an owner or operator to supervise tank system installation, an independent, qualified professional engineer may certify that proper installation practices are followed. Because the regulations require the engineer to be independent, he/she cannot be employed by the tank system owner or operator, in order to avoid a conflict of interest or the appearance of such a conflict. The engineer should be registered to practice in the state in which the new tank system or component is to be installed. Most professional engineers will provide the owner or operator with a resume that summarizes relevant training, experience, and special qualifications, such as previous work in soils engineering, corrosion control, etc. Generally, civil, chemical, and mechanical engineers are most likely to have had appropriate tank system training and experience. Some consulting engineering firms also can be retained to supply professional engineers who are qualified to provide one or more of the services required.

All 50 states and the District of Columbia have laws that govern the practices of professional engineers. In most states, registered professional engineers are required to stamp or seal the certification documents they provide. The engineers are legally responsible for such certifications.

C) Installation Inspection Procedures

The Sec. 264.192(b) regulations require an installation inspector or a registered professional engineer to inspect a new tank system or component for weld breaks; punctures; scrapes of protective coatings; cracks; corrosion; and other structural damage or inadequate construction or installation. It is advisable to inspect for these deficiencies within the context of normal tank installation procedures, as described in this section.

Normally, a tank manufacturer or supplier arranges for the transport of a new tank to the installation site and retains the responsibility for the tank until such time as it is delivered and accepted by the buyer. It is advisable to have the installation inspector observe the arrival of a tank at a site and its off-loading from the tank transporter. While the tank is still on the transport vehicle, an inspector should visually examine the tank for:

- Weld breaks (steel tanks);
- Punctures (all tank types);
- Abrasions affecting protective coatings and/or linings (all tank types);
- Cracks (all tank types); and
- Corrosion (steel tanks), internal and external.

Preinstallation handling of tank system components, particularly the tank itself, must be done carefully so that the components are not scraped, dented, or cracked. Coatings and welds on steel tanks and the structural integrity of fiberglass and concrete tanks are particularly vulnerable to damage from improper handling.

A tank should never be dropped, handled with a sharp object, dented, dragged, or rolled. The proper way to move a tank is to lift it, using lifting lugs installed by the tank manufacturer. Larger tanks have multiple lifting lugs, and all of them should be used. Cables or chains of adequate length should be attached to the lifting lugs, and guidelines should be attached to the ends of a tank in order to direct its movement (see Figure 6-1). The intended distribution of a tank load among lifting lugs should be included in a tank manufacturer's installation instructions. Generally, however, an angle of not less than 30 degrees for tanks is desirable. Lifting hooks should fit the lifting lugs and not be oversized. Shackles should be used if lifting hooks are too large.

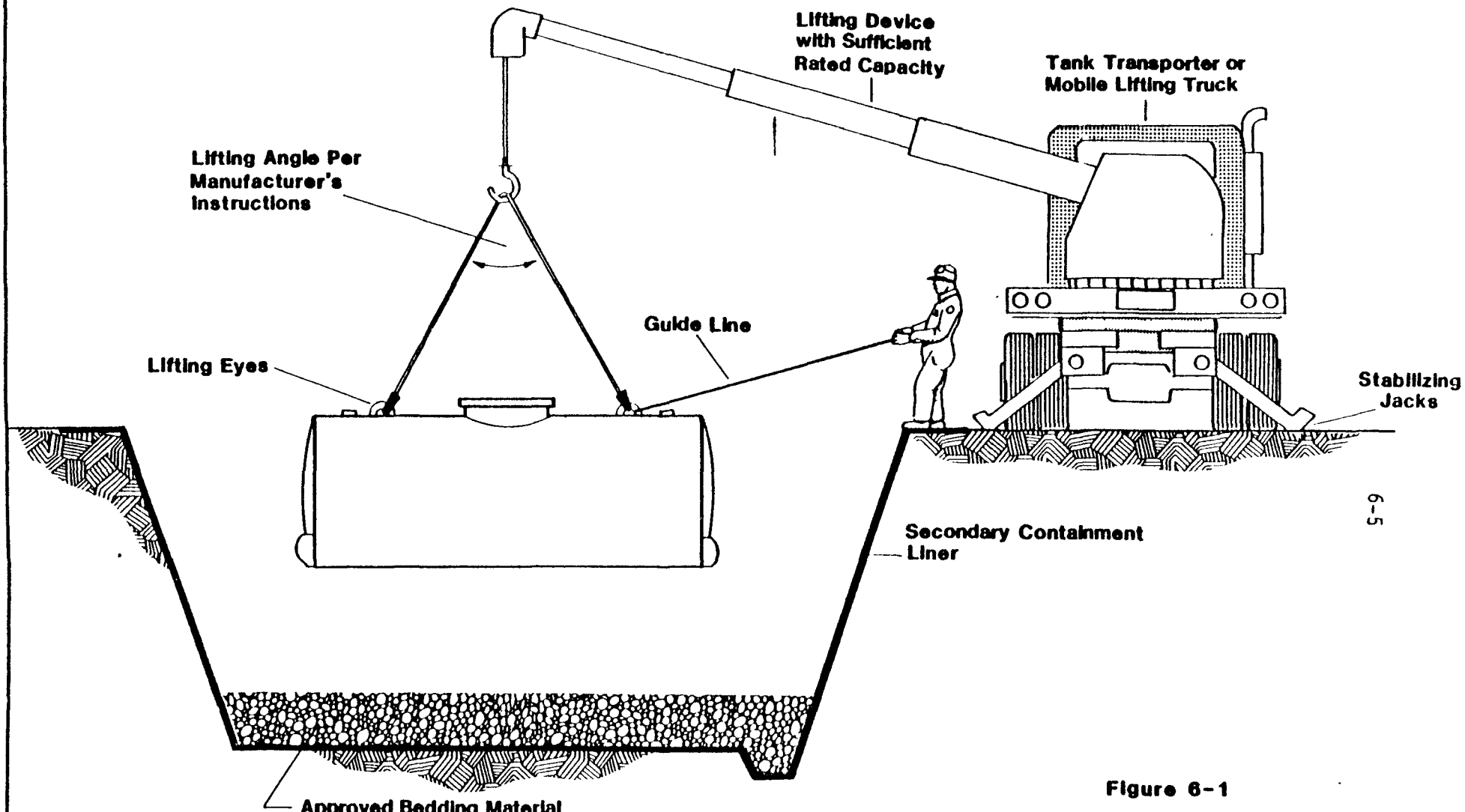

Figure 6-1

Proper Tank Lifting and Placement

FIGURES ARE FOR ILLUSTRATIVE PURPOSES ONLY. THEY ARE NOT INTENDED FOR USE AS CONSTRUCTION DRAWINGS

A spreader bar to separate the hoisting chains or cables at the appropriate angle may be used, if necessary. Cables, chains, or slings should not be wrapped around a tank shell.

Fiberglass reinforced-plastic (RFP) tanks are generally more vulnerable to damage (such as puncture holes) from improper handling than are steel tanks. Thus, an inspector should be particularly alert to any instance of mishandling prior to or during the installation of an FRP tank.

Before a tank is moved, the capacity and reach of hoisting equipment should be checked. A tank should only be placed on smooth ground that is free of rocks or other hard, sharp objects that could puncture or unduly stress the tank. Rolling movement of a tank lying on the ground prior to installation should be prevented. Refer to "Recommended Practices for Installation of Underground Liquid Storage Systems," Petroleum Equipment Institute, Document PEI/RP100-86, for more information on moving tanks.

Immediately after unloading, the tightness of a tank should be demonstrated (see Section 6.3 below). The visual inspection(s) and tightness test will permit the inspector to identify the defects listed in Sec. 264.192(b).

Damage and defects found during the installation inspection or during the tightness test tends to occur at points of high stress, e.g., at seams, lugs, points of contact with the ground, couplings, etc. The inspector should note the occurrence of any high-dynamic stresses during off-loading which, for example, can be caused by placing one tank end on the ground before the other end. In this instance, uneven placement could cause the first end on the ground to bear an unexpectedly large load for a short time, thus damaging the tank. The presence of damage or defects can cause, at worst, tank system structural failure. Without repairs, weld breaks and cracks can render a new tank system useless in a short time. Less severe tank system failure may occur from excessive hoisting, causing metal fatigue, or from inadequate corrosion protection caused by damage to a tank's coating or to its cathodic-protection system or to the electrical

isolation devices. Inground and underground tank systems and components, in particular, must be inspected thoroughly before installation because the portions in contact with backfill are generally inaccessible to routine visual inspections after emplacement.

Excavation design is also critical to ensure continued tank integrity. The installation inspector or professional engineer should ascertain that the excavation side slope, depth of excavation, and distance from nearby structures is appropriate. Care must be taken to avoid undermining nearby foundations during construction or afterwards in order to avoid transferring a foundation's load onto the tank system. See Figure 6.2 for recommended distances from the nearest foundation.

After an inspection of the excavation for potential sources of tank system damage has been completed and any deficiencies corrected, a tank may be lifted into its service position. The procedures described above for lifting and lowering a tank into place also apply to this operation. The tank must be lowered evenly and placed squarely on the receiving bedding or cradle, depending on the secondary containment design, without scratching, abrading, or otherwise damaging the tank (see Figure 6-3).

An inspector should examine a tank following the attachment of anchoring devices to ensure that these devices do not damage the tank's protective coating. A checklist of inspection details, including at least the items listed in Sec. 264.192(b), should be completed by the inspector. (See Figure 6-4.)

D) Repairs

Sec. 264.192(b) also requires that any damage to a new tank system or component must be remedied prior to installation. Normally, such repairs are the responsibility of the supplier or an authorized representative. The tank owner or operator is under no obligation to use a tank system or component that does not meet specifications.

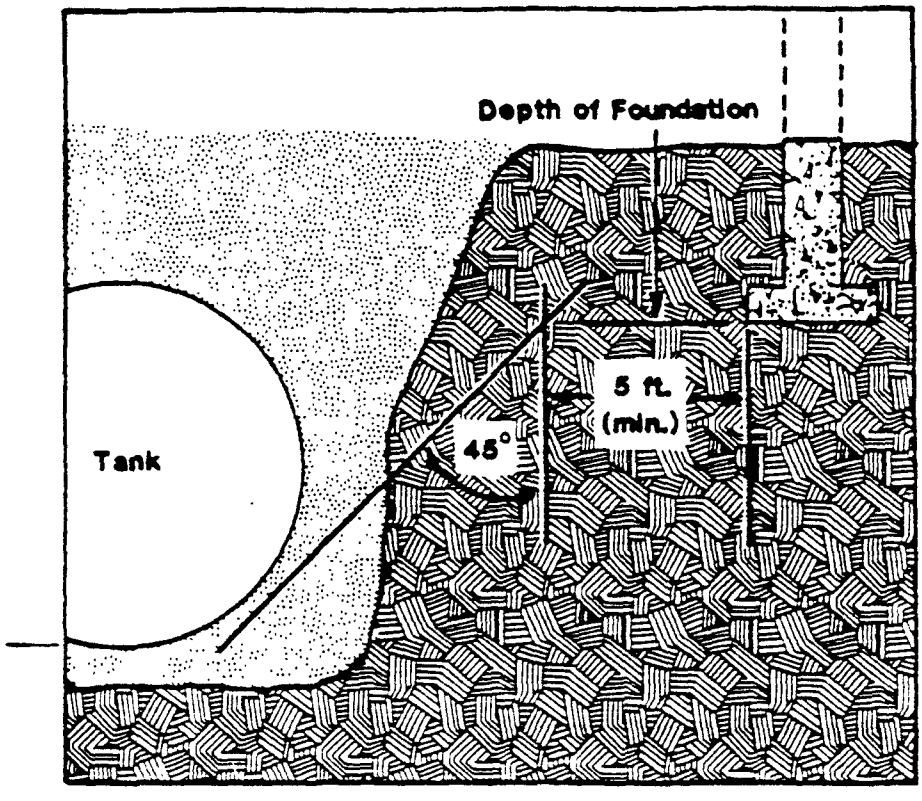

Figure 6-2

Excavation Design: Recommended Distance from the Nearest Foundation

FIGURES ARE FOR ILLUSTRATIVE PURPOSES ONLY THEY ARE NOT INTENDED FOR USE AS CONSTRUCTION DRAWINGS.

Figure 6-3
Excavation

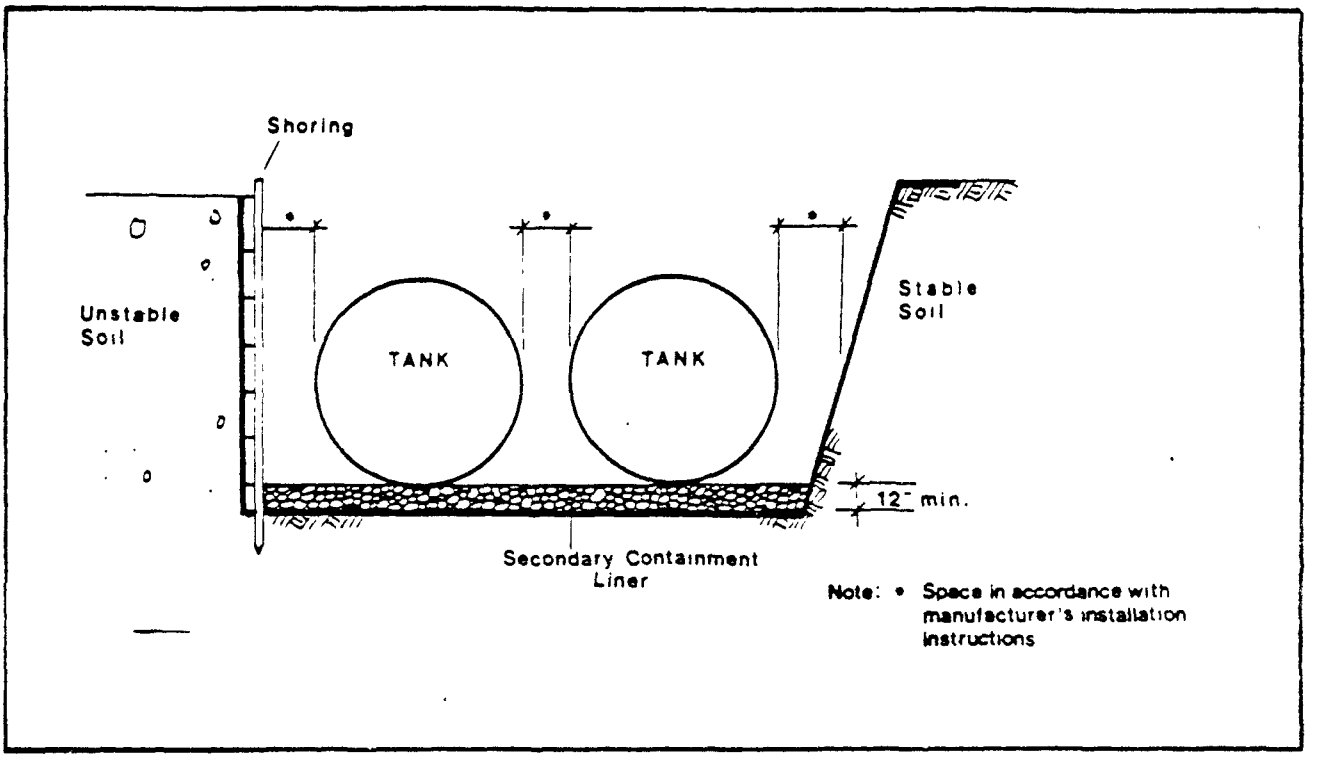

FIGURES ARE FOR ILLUSTRATIVE PURPOSES ONLY. THEY ARE NOT INTENDED FOR USE AS CONSTRUCTION DRAWINGS.

FIGURE 6-4

TANK INSTALLATION CHECKLIST

This checklist is intended to provide guidance to installation inspectors regarding minimum requirements for proper underground tank installation.

	Completed	Initials	Date
1. Tank Delivery			
1.1 When the tank is delivered, inspect the tank on the carrier vehicle for weld breaks, punctures, scrapes of protective coatings, cracks, corrosion or other structural damage. Check stress points, such as tie downs, anchor blocks, cradle supports, etc.	[ ]	_____	_____
1.2 Observe off-loading of tank for conformances to manufacturer's recommended procedures. If applicable, check intermediate placement of tank on ground surface for proper support, absence of sharp objects etc.	[ ]	_____	_____
1.3 Observe preinstallation air pressure tightness test. Record results, method(s) used.	[ ]	_____	_____
1.4 Observe final lifting and placement in excavation. Look for same items as in 1.1 and 1.2 above.	[ ]	_____	_____
2. Excavation			
2.1 Check completed excavation for general conformance to manufacturer's and/or engineer's drawings and specifications; include size (width, length, depth), sidewall clearances/slopes, shoring and other factors of excavation geometry.	[ ]	_____	_____
2.2 Consult local agencies for information regarding water table depth/fluctuations. Check excavation and excavated material for evidence of high ground water conditions (soil moisture), visible standing water. If unusual soil conditions are found, notify owner or designated representative.	[ ]	_____	_____

FIGURE 6-4--CONTINUED

	Completed	Initials	Date
2.3 Observe installation of secondary containment liner or vault in accordance with engineer's and/or manufacturer's plans and specifications.	[ ]	_____	_____
2.4 If appropriate monitor installation of anchor bedding, supports, anchor slab, anchor tie downs, etc., in accordance with engineer's plans and specifications.	[ ]	_____	_____
2.5 Monitor placement of bedding material (sand, pea gravel, etc.) in accordance with engineer's and/or manufacturer's plans and specifications. Check depth, distribution, characteristics of material (noncorrosive, porous, homogeneous).	[ ]	_____	_____
3. Backfilling			
3.1 Monitor backfilling so that tank is fully ~~and~~ uniformly supported. Make sure no void spaces are left under the tank as backfilling progresses. Monitor for consistent placement/compaction.	[ ]	_____	_____
3.2 Observe that backfilling fully and uniformly supports piping, secondary containment installation and appurtenances thereto. Monitor for consistent placement/compaction.	[ ]	_____	_____
3.3 Observe final tightness testing of tank, piping and ancillary system equipment prior to its being covered, enclosed and/or placed in use.	[ ]	_____	_____
3.4 Monitor final backfill placement. Make sure depth of cover meets manufacturer's and/or engineer's specifications.	[ ]	_____	_____
4. Corrosion Protection			
4.1 Cathodic Protection--observe that corrosion protection system installed meets requirements established by the independent corrosion expert, retained by the owner/operator, and, if applicable, by the EPA Regional Administrator.	[ ]	_____	_____

FIGURE 6-4--CONTINUED

	Completed	Initials	Date
4.2 Installation of Field Fabricated Systems--observe that field-fabricated, corrosion-protection system installation is supervised by the selected independent corrosion expert.	[ ]	_____	____
5. Piping/Equipment Installation			
5.1 Monitor installation of piping, valving, pumps and other equipment ancillary to the tank and the secondary containment facilities. Make sure it is accomplished in accordance with engineer's and/or manufacturer's plans and specifications and with local building and other applicable codes and regulations.	[ ]	_____	____
5.2 Observe that testing of such equipment is accomplished properly and in accordance with 3.3 above.	[ ]	_____	____
6. Repairs			
6.1 Note separately any deficiencies found during the installation process and provide complete information regarding any repairs.	[ ]	_____	____
7. Certification			
7.1 Provide owner/operator with certification of design and installation of tank in accordance with federal and state requirements. Provide any local certifications required.	[ ]	_____	____
8. Comments			
8.1 Provide an "as-built" drawing to a scale of 1"-10' showing the location and characteristics of the tank installation. Use a separate sheet if necessary. Also, note any unusual conditions and/or system operating conditions.	[ ]	_____	____

Minor repairs can be performed on-site by the supplier, such as structural repairs to small weld cracks or chipped fiberglass coatings. If the damage is major or irreparable, the tank system or component should be rejected. Under no circumstances should such a tank system or component be placed into use.

6.2 BACKFILLING

Citation

Section 264.192(c) specifies the requirements for backfill material and the backfilling process for a new underground tank system or component. These requirements were developed to minimize the possibility of external corrosion from the surrounding environment and to ensure that the equipment is properly supported. Section 264.192(c) states:

> New tank systems or components that are placed underground and that are backfilled must be provided with a backfill material that is a noncorrosive, porous, homogeneous substance and that is over installed so that the backfill is placed completely around the tank and compacted to ensure that the tank and piping are fully and uniformly supported.

Tank manufacturers often provide installation specifications for backfill material and placement. Prior to installation, the inspector of a new tank system should include on the inspection checklist an examination of backfill material and placement.

Guidance

A) Backfill Material

For an underground tank installation, all excavated native soil must be replaced with appropriate backfill material. Backfill below, around, and above a tank should be homogeneous, clean, and properly compacted. Backfill material for steel and composite tanks is different from that for nonmetallic tanks. The use of inappropriate backfill material can void a tank manufacturer's warranty. Backfill suppliers should be able to

certify material characteristics. "Recommended Practices for Installation of Underground Liquid Storage Systems," Petroleum Equipment Institute, Document PEI/RP100-86 may be used as guidance on backfill selection and installation.

In general, a steel or composite tank requires backfill that is composed of washed, well-granulated, free-flowing sand or gravel. The largest particle should not be bigger than 1/8 of an inch, not more than five percent by weight, and should be able to pass through a #200 sieve. In freezing conditions, the backfill must be dry and free of ice and snow.

For a nonmetallic tank, the backfill should consist of pea gravel, defined as rounded particles with a diameter between 1/8 and 3/4 inch, or crushed rock or gravel, defined as washed and free-flowing, angular particles between 1/8 and 1/2 inch. Not more than three percent by weight should be able to pass through a sieve. As with the backfill for metal tanks, this backfill must be dry and free of ice and snow.

B) Backfill Placement

An underground tank and its backfill act together to provide the necessary structural support for tank contents and external loads. Tanks are designed to be flexible and to deflect slightly, displacing backfill in response to loading. Thus, because a tank is designed to deflect, backfill must be placed and compacted uniformly around the tank so that excessive stresses are not created in any portion of the deflecting tank. A tank must not be filled before backfill is in place to the top of the tank. After the backfill is added up to the top of the tank, either water or the product to be stored must be added as ballast. At that time, the ballast will keep the tank in place until piping and the rest of the backfill is installed.

The dimensions of a tank excavation are important. The hole must be deep enough to contain graded and leveled backfill bedding of at least six

inches for a steel tank and one foot for an FRP tank. At least two feet of backfill, or not less than one foot of backfill and four inches of reinforced concrete, must be placed above a tank in a non-traffic area (for backfill cover specifications in an area with traffic, see document Section 4.1). Eighteen, or preferably, 24 inches of backfill are needed between adjacent tanks and between tank sides and the edges of an excavation. Pressure imposed on a tank should not exceed five pounds per square inch (psi). If the depth of backfill cover is greater than a tank's diameter, the tank manufacturer should be consulted to determine if reinforcement of the tank is desirable. FRP tanks should not have more than seven feet of overburden. Special cover and spacing requirements may exist for very large tanks; see manufacturers' installation instructions.

Deep pits in unstable soil conditions may require extra support or shoring to prevent cave-ins during installation. In addition, because backfill provides as much as 90 percent of the tank support for an FRP tank, manufacturers of such tanks provide special instructions for tank installation in unstable soil environments (muck, bog, peat, swamp, or landfill areas). Typical excavation considerations include soil stability, and space for anchors and observation wells. Double-walled underground tanks installed in unstable soil conditions may require a filter fabric to separate backfill from adjacent soil to prevent backfill migration. Filter fabrics are geotextiles designed to stop movement of backfill materials while allowing water to pass through. If sand and pea gravel are used together in an individual excavation, they should be separated with the filter fabric to preclude the migration of sand fines into voids between the pea gravel particles. A reference on worker safety precautions in areas with unstable soil is "Construction Industry Standards and Interpretations" (1985), OSHA Publication 2079.

Backfill should be placed carefully along the bottom quadrant and end caps of a tank to ensure that the tank is securely and evenly supported. The compacted backfill beneath a tank permits the forces present to be dissipated uniformly over a large area. The backfill base should extend one foot beyond the perimeter of a tank. No voids (air spaces) should

exist around the base of a tank, nor should intermediate supports (saddles) be used because these features can magnify the effects of structural loading and can cause a tank to rupture (see Figure 6-5). Moreover, water can accumulate in a void, causing accelerated local corrosion. A long compacting tool or probe can be used to compact backfill under a tank. Sand backfill usually requires mechanical compacting to provide adequate tank support and to reduce the possibility of voids forming under a tank.

An excavation will fill with water if the ground-water table is high. A tank can be installed under such conditions, however, with appropriate anchoring, ballasting immediately after backfill reaches the tank top, and/or dewatering of the excavation pit. Ballast level in a tank must not exceed the water level in the excavation. If dewatering is required, an experienced professional engineer, geologist, or hydrogeologist should be consulted. See also, "Construction Dewatering, A Guide to Theory and Practice," (1981) by J.P. Powers, published by John Wiley and Sons, Inc. (New York, NY).

Permanent tank anchoring may be required with this environmental condition. If a hold-down pad is used (see Section 5.1 of this document), one foot of compacted backfill base should be placed on top of the pad before seating a tank.

Once a tank has been firmly seated on its backfill base and the tank's ancillary equipment installed, the balance of backfill may be placed. Homogeneous clean sand, pea gravel, and crushed rock are relatively self-compacting and are easy to place. Any debris in the backfill, such as concrete chunks or rocks, can prevent local deflection of a tank shell, which can cause the tank to fail. Such debris must be removed from backfill. Native soil taken from a tank excavation should not be used as backfill, unless its noncorrosiveness and porosity are approved by the installation inspector or the registered engineer who supervises tank system or component installation.

Figure 6-5

Backfill

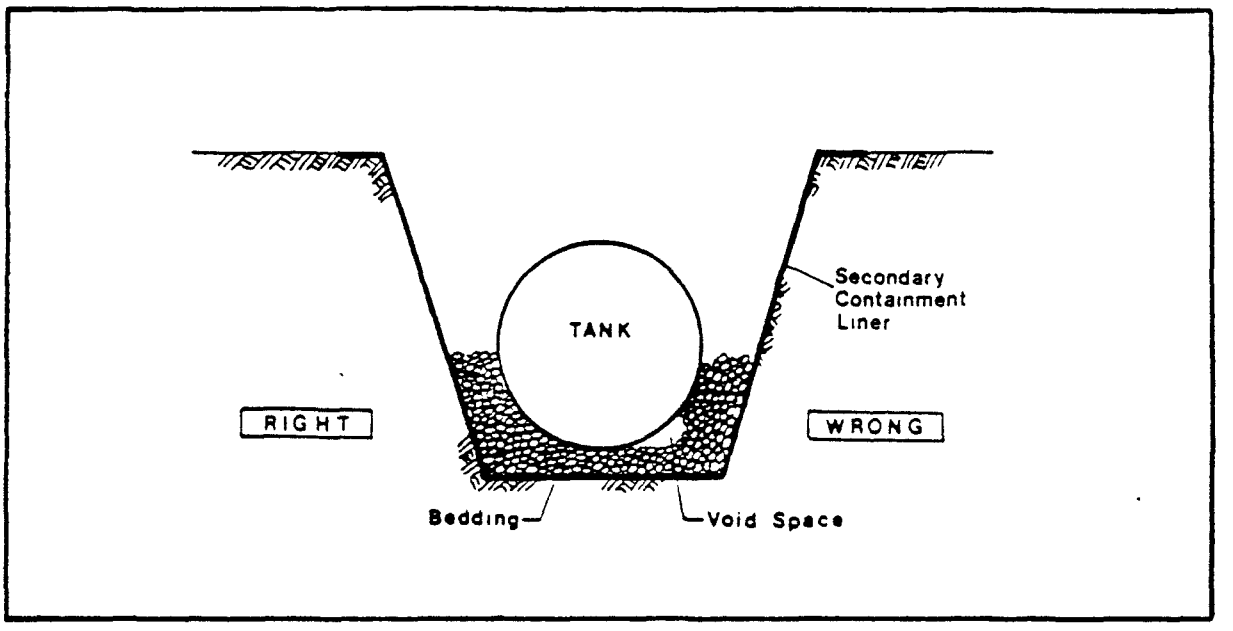

FIGURES ARE FOR ILLUSTRATIVE PURPOSES ONLY. THEY ARE NOT INTENDED FOR USE AS CONSTRUCTION DRAWINGS.

6.3 PRE-SERVICE TANK AND ANCILLARY EQUIPMENT TESTING

Citation

Tightness testing of a tank and its ancillary equipment can prevent leaking equipment from being placed into operation. Section 264.192(d) requires that:

> All new tanks and ancillary equipment must be tested for tightness prior to being covered, enclosed, or placed in use. If a tank system is found not to be tight, all repairs necessary to remedy the leak(s) in the system must be performed prior to the tank system being covered, enclosed, or placed into use.

Tests for tightness should be performed by leak-testing experts.

Guidance

A) Tanks

All new tank systems must be tested prior to being placed in service. It is particularly important that a tank system that will be in contact with backfill or soil is tested for tightness because this type of system will later be inaccessible to routine visual inspections.

For aboveground, onground, and inground tanks, testing for tightness should be done at operating pressure using air, inert gas, or water. Tightness test procedures for a double-walled tank should be conducted in a manner approved by the tank manufacturer. Generally, these procedures involve testing both the primary and secondary shells simultaneously. Air pressure testing should not be used for underground tanks that are already buried. An underground tank should be tested for tightness hydrostatically or with air pressure, before being placed in the ground.

To perform a tightness test, all factory-installed plugs should be removed, doped, and reinstalled, and all tank fittings must be tightened. Replace all metal or plastic thread protectors with liquid-tight, cast

iron plugs. All surfaces, seams, fittings, and visible dents must be thoroughly soaped and carefully inspected for bubbles during an air or inert gas pressure test. A pressure gauge that accurately measures small changes in pressure (less than 1/2 psi) should be used. For an air pressure test, air pressure should not be less than 3 psi (20.6 kPa) and not more than 5 psi (34.5 kPa); air testing with over 5 psi may damage a tank. An air pressure test should not be performed on equipment that has contained flammable or combustible material. Never conduct a negative pressure (partial vacuum) test and never leave a tank under test conditions unattended. See also, "Flammable and Combustible Liquids Code," NFPA 30, (1984). A registered professional engineer should approve any deviations to these testing guidelines (for example, vacuum test might be considered for an ASME pressure vessel).

B) Piping

Piping (aboveground and underground, prior to installation) may be tested hydrostatically at 150 percent (but not less than 50 psi) or pneumatically at 110 percent of the maximum anticipated system pressure. The piping must be disconnected from the tank, and all joints, connections, and dents must be thoroughly soaped. The test must be maintained for a sufficient time to complete a visual inspection of all joints, connections, and dents for bubbles, usually 30 to 60 minutes. American Petroleum Institute (API) Publication RP 1110, "Recommended Practice for the Pressure-Testing of Liquid Petroleum Pipelines, Second Edition" (1981) may serve as guidance for hydrostatic testing of piping.

C) Repairs

Before a tank system is placed in use, all leaks discovered during testing for tightness must be remedied. Minor tank damage can be corrected onsite, but a major defect may render a tank system unusable. A repaired tank and/or piping should be retested before burial.

6.4 ANCILLARY EQUIPMENT INSTALLATION

Citation

Proper ancillary equipment installation practices further ensure the integrity of a tank system. Section 264.192(e) regulates these practices, as follows:

> Ancillary equipment must be supported and protected against physical damage and excessive stress due to settlement, vibration, expansion, or contraction.

Guidance

Faulty installation of piping and pipe fittings is a major cause of leaks and spills at hazardous waste storage facilities. Proper ancillary equipment installation is required to satisfy Sec. 264.192(e).

Both aboveground and underground ancillary equipment is subject to mechanical and thermal stresses. Underground piping is generally, however, more uniformly supported and thus is somewhat better protected from excessive stress. Examples of mechanical stress include vibration surges in liquid flow (water hammer), ground subsidence, seismic activity, and wind blowing on aboveground piping. Thermal stresses are attributable to climatic changes and the presence of heated or cooled fluids or equipment.

A piping trench should be situated so that it does not pass over any underground tanks and so piping leaves a tank excavation by the shortest route, minimizing crossing of any underground tanks. A piping route should also be arranged to minimize the distance between inlet and outlet, and as few trenches as practical should be constructed. Each trench should be at least twice as wide as the nominal piping diameter.

Connections between the pipe lengths and between the tank and piping are a frequent source of leaks. If connections are not secure, pipeline stresses will be transmitted to ancillary equipment. When pipe is screwed together,

thread lubricant (pipe dope) is necessary to ensure that the piping and fitting are mated to the proper depth and that a tight seal has been made. The lubricant also provides some degree of protection against the crevice corrosion that can occur at such joints; where threads are joined, the union of two metals with just slightly different properties can result in a galvanic cell that will corrode if not protected.

FRP joints should be glued, except where transitions to pumps and emergency shutoff valves are made. Relatively thin-walled, Schedule 10 stainless steel pipe may be used for low-pressure piping, and the joints for such piping should be welded. Welding stainless steel is an operation requiring considerable skill and attention to detail. Where screwed connections are required, such as for the pump connection, a transition to Schedule 40 pipe must be made. The Schedule 40 pipe has sufficient thickness to allow for pipe threads to be cut.

The joining methods for double-walled piping include flanges, welding, and resin-gluing. The exact method depends on the specific type of piping chosen. Manufacturers' specifications should be consulted for more detailed information.

Aboveground piping must be properly supported through the use of anchors, hangers, or other supporting elements that can withstand the expected mechanical loadings. Additionally, aboveground ancillary equipment should be located in protected areas so that any projecting parts are not damaged by moving equipment or traffic. It is recommended that aboveground valves be installed with the stem upright or, at worst, horizontal, to prevent sediment from becoming trapped and damaging the stem. Moreover, freezing can rupture parts of an inverted valve.

Piping supports must be designed not to cause excessive local stresses in piping and not to impose excessive axial or lateral friction forces. All piping attachments must be designed to minimize the stresses they could cause in the pipe wall. Nonintegral attachments, such as pipe clamps and ring girders are preferred, if they can fulfill the necessary supporting or anchoring functions.

Braces and damping devices may occasionally be required to prevent piping vibration. If piping is designed to operate at or close to its allowable stress, all connections welded to the piping must be made to a separate cylindrical member that completely encircles the piping. This encircling member must be welded to the piping using continuous, circumferential welds.

In order to protect underground piping, backfilled trenches must be large enough to accommodate at least six inches of backfill around each line. Underground pipelines should be covered by at least 12 inches of backfill in an area without traffic and by at least 18 inches of backfill in an area with traffic. Vent piping should be at least 12 inches below the ground surface, beginning from the point where the piping rises vertically (or four inches in a no-load area). Aboveground vent piping should be placed in a location that protects it from traffic and other sources of damage. All piping should slope at least 1/8 inch per foot horizontal toward the tank, and piping should be carefully laid to avoid sags or traps in the line that could collect liquid. Manufacturers' instructions for installation of non-metallic piping should be followed explicitly.

Bedding and covering backfill for buried piping should be composed of a single material, similar to the tank backfill materials described in Section 6.2. Backfill compaction and placement specifications are also the same as for underground tanks. Special care must be taken to remove all debris when compacting over nonmetallic piping.

Breakage of underground piping and vent lines and the loosening of pipe fittings that can cause leaks can be minimized through the use of swing joints or some other type of flexible coupling. Swing joints should be installed where piping is connected to an underground tank, where piping ends at a vent riser, and where piping changes direction. Swing joints should be made of a short nipple, together with a combination of the following fittings: two 90° elbows; one 90° elbow and one 45° elbow; either a 90° or a 45° elbow and a tee; a flexible connector approved for the application. Unless local regulations require swing joints for all FRP piping, swing joints are not required if at least 4 feet of straight-run piping provides for any directional change exceeding 30 degrees.

All piping systems should also be designed to prevent expansion or contraction from causing excessive stresses and bending in the system. For example, if significant temperature changes are expected, such as in pipes carrying heated wastes, the piping system possibly should include anchors and/or extra bends, expansion joints, expansion loops, etc., for flexibility. Aboveground piping can be protected from expansion and contraction in the same way as buried piping, but it requires consideration of beam-bending stresses and the possible elastic instability of the piping and its supports from longitudinal compressive forces.

The following references can greatly assist in the installation of piping system supports and protection:

- API Publication 1615, "Installation of Underground Petroleum Storage Systems" (1979);
- ANSI Standard B31.3, "Petroleum Refinery Piping" (1986);
- ANSI Standard B31.4, "Liquid Petroleum Transportation Piping Systems" (1980);
- Petroleum Equipment Institute (PEI), Standard PEI/RP 100-86. "Recommended Practices for Installation of Underground Liquid Storage Systems" (1986), and;
- Piping manufacturer installation instructions.

Figures 6-6 to 6-8 present examples of piping system installation details.

6.5 CORROSION PROTECTION SYSTEM INSTALLATION

Citation

To ensure that a new tank system has adequate corrosion protection, the owner or operator must use a corrosion expert to supervise field fabricated installation of corrosion protection, particularly for a cathodic protection system. As specified in Sec. 264.192(f):

> The owner or operator must provide the type and degree of corrosion protection recommended by an independent corrosion expert, based on

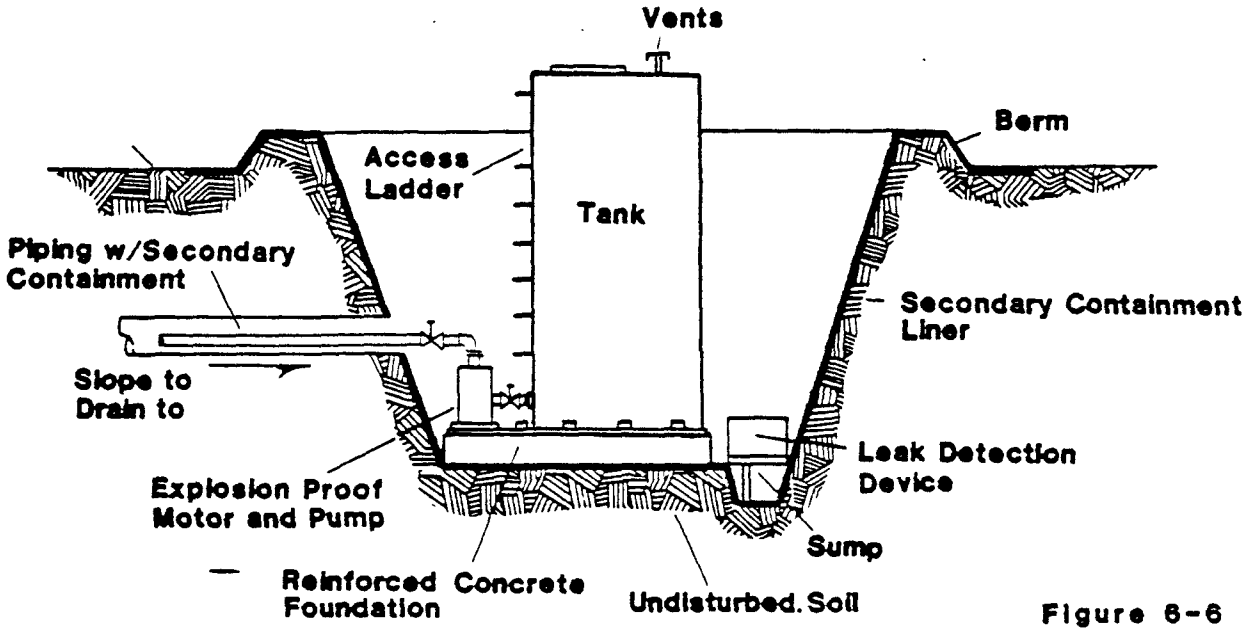

Figure 6-6

Partially Buried Vertical Hazardous Waste Tank with Secondary Containm

FIGURES ARE FOR ILLUSTRATIVE PURPOSES ONLY. THEY ARE NOT INTENDED FOR USE AS CONSTRUCTION DRAWINGS.

Figure 6-7
Underground Tank and Piping System

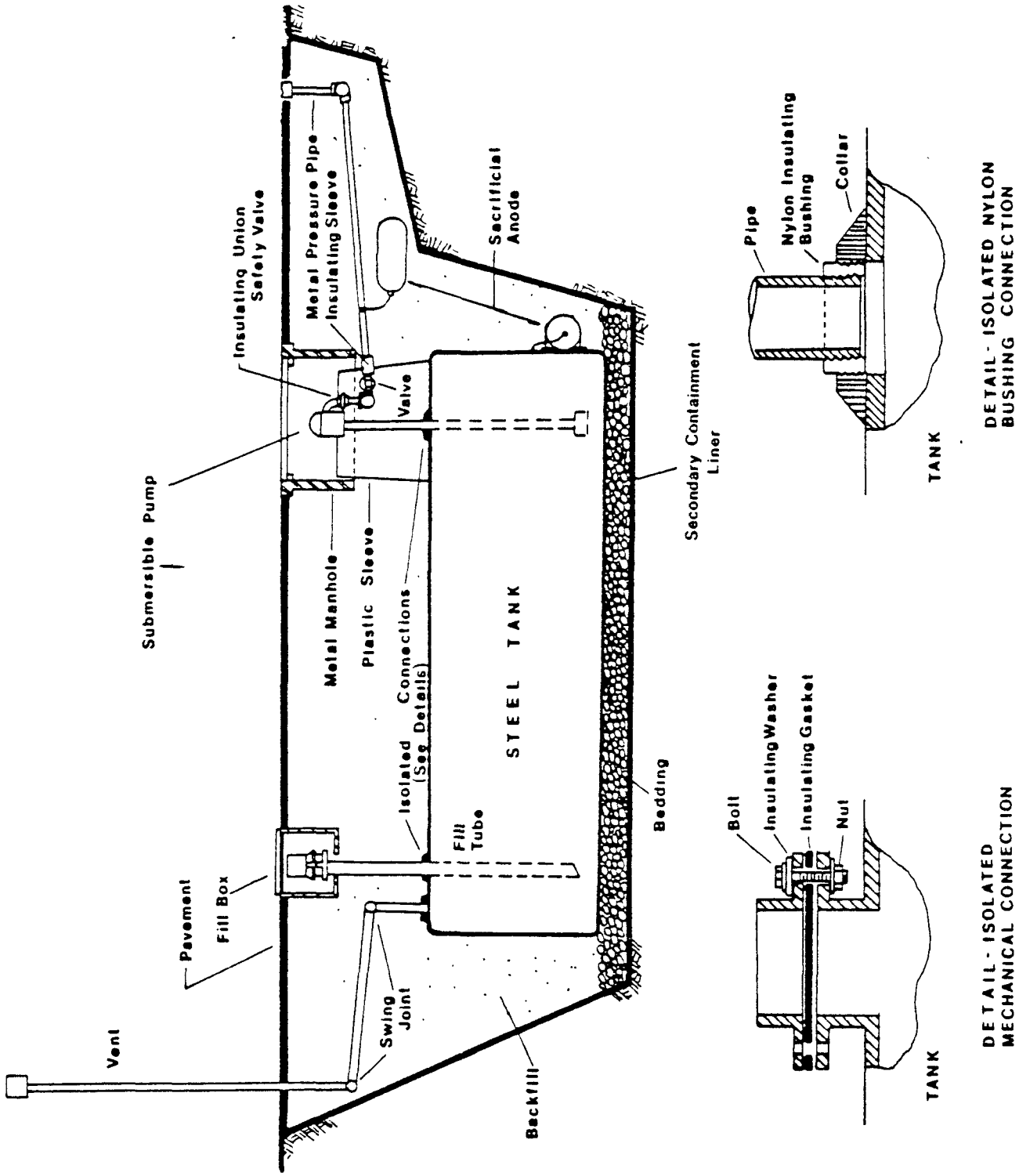

FIGURES ARE FOR ILLUSTRATIVE PURPOSES ONLY. THEY ARE NOT INTENDED FOR USE AS CONSTRUCTION DRAWINGS.

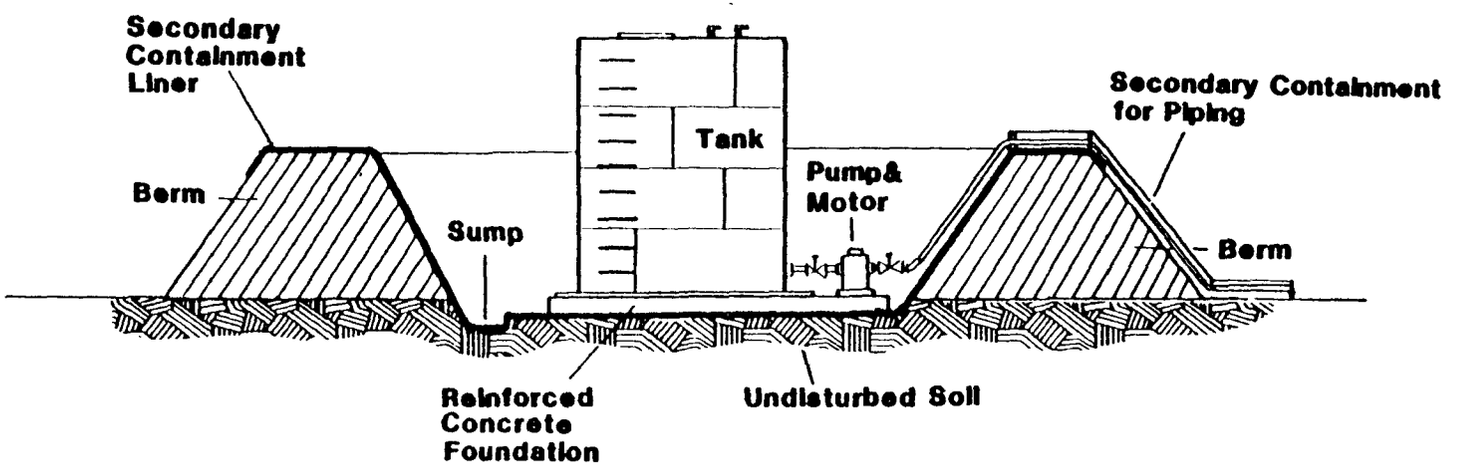

Note: Volume inside berms should be a minimum of 100% of the tank volume plus the precipitation from a 24 hour, 25 year storm

Figure 6-8
Aboveground Tank

FIGURES ARE FOR ILLUSTRATIVE PURPOSES ONLY. THEY ARE NOT INTENDED FOR USE AS CONSTRUCTION DRAWINGS

the information provided under paragraph (a) (3) of this section or other corrosion protection if the Regional Administrator believes other corrosion protection is necessary to ensure the integrity of the tank system during use of the tank system. The installation of a corrosion protection system that is field fabricated must be supervised by an independent corrosion expert to ensure proper installation.

Guidance

Using the information obtained for the requirements of Sec. 264.192(2)(3), an independent corrosion expert (defined in Section 5.1) will be able to determine corrosion protection needs of a tank system for its intended lifetime. A corrosion expert must oversee the installation of any corrosion protection devices, particularly cathodic protection, that are field fabricated for a new tank system.

Information on cathodic-protection system construction, inspection, handling, electrical isolation, and installation details can be found in the National Association of Corrosion Engineers (NACE) Standards RP-02-85, "Recommended Practice--Control of External Corrosion on Metallic Buried, Partially Buried, or Submerged Liquid Storage Systems" (1985); RP-01-69, "Recommended Practice--Control of External Corrosion on Underground or Submerged Metallic Piping Systems" NACE (1983), and Petroleum Equipment Institute (PEI) standard PEI/RP 100-86, "Recommended Practices for Installation of Underground Liquid Storage Systems" (1986). (See document Section 5.4 for additional information on cathodic-protection system installation.)

6.6 CERTIFICATIONS OF DESIGN AND INSTALLATION

Citation

Following installation, Sec. 264.192(g) requires the owner or operator of a new tank system to:

...obtain and keep on file at the facility written statements by those "persons" required to certify the design of the tank system and supervise the installation of the tank system in accordance with the requirements of paragraphs (b) through (f) of this section, that attest that the tank system was properly designed and installed and that repairs, pursuant to paragraphs (b) and (d) of this section, were performed. These written

statements must also include the certification statement as required in §270.11(d) of this Chapter.

Guidance

The professional engineer who certifies a tank system's structural integrity, the installation inspector, the tightness tester, the corrosion expert, and anyone else who has supervised a portion of the design and installation of a new tank system or component must document that the system is in accordance with the requirements of Sec. 264.192(a-f). Materials accompanying and supporting these statements might include "as-built" installation drawings and photographs of tank and piping components.

A sample statement of the form required by Sec. 264.192(g), including the Section 270.11(d) truthfulness certification, follows:

> I, [Name], have supervised a portion of the design or installation of a new tank system or component located at [Address], and owned/operated by [Name(s)]. My duties were: [e.g., preinstallation inspection, testing for tightness, etc.], for the following tank system components [e.g., the tank, vent piping, etc.], as required by the Resource Conservation and Recovery Act (RCRA) regulation(s), namely, 40 CFR 264.192 [Applicable Paragraphs (i.e., a-f)].
>
> I certify under penalty of law that I have personally examined and am familiar with the information submitted in this document and all attachments and that, based on my inquiry of those individuals immediately responsible for obtaining the information, I believe that the information is true, accurate, and complete. I am aware that there are significant penalties for submitting false information, including the possibility of fine and imprisonment.
>
> _____
> Signature
>
> _____
> Title
>
> _____
> Registration No., if applicable
>
> _____
> Address

The certification statements must be kept on file indefinitely at the tank facility, as specified in Sec. 264.192(g).

6.7 DESCRIPTION OF TANK SYSTEM INSTALLATION

Citation

For the Part B application the owner or operator must provide a detailed description of how a new tank system will be installed, in accordance with Section 270.16(f):

> Sec. 270.16(f) for new tank systems, a detailed description of how the tank system(s) will be installed in compliance with Sec. 264.192(b), (c), (d), and (e);

Guidance

Section 270.16(f) requires that owners or operators provide a detailed description of the tank system installation with respect to the tank handling and installation procedures, the type and installation of backfill, the tightness testing results and methodology, and the installation of ancillary equipment. This description must be sufficiently detailed for the EPA to determine if the tank and its ancillary equipment, as installed, have sufficient integrity to prevent releases of waste to the environment during use. The description should describe handling and lifting methods used on-site and precautions taken to avoid weld breaks, punctures, scrapes of protective coatings, cracks, corrosion, and other structural damage. The description should also include precautions taken to avoid future damage due to settling, high water tables, frost heave, vibration, expansion, and contraction. For the tightness testing, the description should include the methodology, the results, conclusions, and any recommendations made or actions taken as a result of the testing.

6.8 SUMMARY OF MAJOR POINTS

The following summarizes the information covered in this section and should be used to assure the completeness of a Part B permit application:

- Is the installation inspector or registered engineer qualified to inspect a new tank system or component prior to installation? Can this individual discriminate between reparable and irreparable damages and defects? Can he/she assess the adequacy of a repair?

- Has he/she inspected the tank system during installation for the presence of at least the following:

  -- Weld breaks;
  -- Punctures;
  -- Scrapes of protective coatings;
  -- Cracks;
  -- Corrosion; and
  -- Other structural damage or inadequate construction/installation.

  Have all such problems been remedied before the system was placed in use?

- Is the backfill noncorrosive, porous, homogeneous? Are the dimensions of the tank excavation adequate? Has the backfill been placed and compacted carefully around the tank?

- Does the tank pass a test for tightness? Does the piping system pass an analogous test?

- Is the piping system adequately supported and protected against damage from external and internal loads?

- Has a corrosion expert supervised the installation of any field-fabricated corrosion protection, particularly cathodic-protection devices?

- Have statements been written by the appropriate personnel to certify that the tank system is properly designed and installed? Are these statements on file at the facility?

- Has a detailed description of the tank system installation and tightness testing been provided?

In addition, see Appendix A, "Completeness Checklist," to verify compliance with the requirements of this section.

7.0 SECONDARY CONTAINMENT SYSTEMS AND RELEASE DETECTION

Under the Sec. 264.193(a) regulations, all hazardous waste tank systems, except those specifically exempted in Sec. 264.190(a) and (b), will be required to be either installed or retrofitted with secondary containment, including a leak-detection capability, within a specific period of time. Tank systems with newly listed hazardous wastes are also subject to the Sec. 264.193 secondary containment system requirements. The only exceptions to the secondary containment requirements will be granted to those owners or operators who demonstrate successfully that their tank systems qualify for a variance from the requirements under Sec. 264.193(g) (see Section 8.0 of this document for further information on variances).

EPA has determined that secondary containment with interstititial monitoring is the only proven technique for guarding against releases to ground and surface waters. The primary advantage of secondary containment is that is allows for detection of leaks from the primary or inner tank while providing a secondary barrier that contains releases before they enter the environment. Secondary containment also provides protection from spills caused by operational errors, such as overfilling. All waste and precipitation collected by the secondary containment system must be promptly removed in accordance with all local and federal regulations.

The types of tank secondary containment systems that are acceptable under Sec. 264.193(d) are liners (external to tanks), vaults, double-walled tanks, concrete bases with diking, and equivalent systems as approved by a Regional Administrator of the Environmental Protection Agency (EPA). Liners cover the edges of a tank excavation to prevent migration of any released substances to the environment. They are generally constructed of low permeability natural material (such as clay) or of synthetic membrane (such as polyvinyl chloride). Vaults, generally constructed of concrete and lined with a nonporous coating (required under Sec. 264.193(e)(2)(iv)), act as chambers that temporarily contain any released materials. Vaults are usually designed to allow inspection of the enclosed tank for leaks. Double-walled tanks hold

leakage in the interstitial space between the inner and outer tank walls, thus preventing releases to the environment.

Information pertaining to the plans and descriptions of secondary containment systems must be included in Part B of the permit application, as specified in Sec. 270.16(g)--"Detailed plans and description of how the secondary containment system for each tank system is or will be designed, constructed, and operated to meet the requirements of Secs. 264.193(a), (b), (c), (d), (e), and (f)." Detailed guidance is provided in the following sections.

7.1 SECONDARY CONTAINMENT IMPLEMENTATION SCHEDULE

Citation

Sec. 264.193(a) defines the federally mandated implementation schedule for installation of secondary containment for new and existing tanks, as of the effective date of the amended Regulations (Jan. 12,1987):*

(1) For all new tank systems or components, prior to their being put into service;
(2) For all existing tank systems used to store or treat EPA Hazardous Waste Nos. F020, F021,F022, F023, F026, and F027, within two years after January 12, 1987.
(3) For those existing tank systems of known and documented age, within two years after January 12, 1987 or when the tank system has reached 15 years of age, whichever comes later; and
(4) For those existing tank systems for which the age cannot be documented, within eight years of January 12, 1987; but if the age of the facility is greater than seven years, secondary containment must be provided by the time the facility reaches 15 years of age, or within two years by January 12, 1987, whichever comes later; and
(5) For tank systems that store or treat materials that become hazardous wastes subsequent to January 12, 1987, within the time intervals required in paragraphs (a)(1) through (a)(4) of this section, except that the date that material becomes a hazardous waste must be used in place of January 12, 1987).

* Applicable State regulations should be consulted to determine if a State mandated schedule is in effect.

Guidance

The Sec. 264.193(a) regulations require that tank systems posing the greatest risks receive the most immediate attention and that new tank systems install secondary containment prior to being placed in use, since it is most feasible to install containment at that time. Tank systems containing certain listed dioxin wastes (Sec. 264.193(a)(2)) and those that are 15 years of age are considered to be of greatest risk to human health and the environment.Such tank systems have a maximum of two years from the effective date of these regulations to install secondary containment.

Documentation of the age of a tank system may be provided by a bill of sale, dated engineering drawings of a facility, or any other written proof of tank system installation. Even if a tank system has not contained hazardous waste for 15 years, the tank system may have deteriorated during its service lifetime. Thus, the documented age desired by the EPA is the actual age of a tank system, not the period the system held hazardous waste.

7.2 PROPERTIES OF A SECONDARY CONTAINMENT SYSTEM

Citation

As stated in Sec. 264.193(b) of the Part B permit application regulations, a tank system's secondary containment must be:

(1) Designed, installed, and operated to prevent any migration of wastes or accumulated liquid out of the system to the soil, ground water, or surface water at any time during the use of the tank system; and
(2) Capable of detecting and collecting releases and accumulated liquids until the collected material is removed.

Guidance

The requirements for tank system secondary containment are meant to ensure that no waste is released to the surrounding environment. Sec. 264.193(b) lists the necessary characteristic design properties of an effective secondary

containment system, and Sec. 264.193(c) elaborates upon them (see Sec. 7.3 of this manual, "Design Parameters"). Section 264.193(d) lists devices that will meet the criteria for effective secondary containment. Finally, Sec. 264.193(e) provides further requirements for these systems (see Sections 7.5-7.7 of this document, "Liner Requirements," "Vault Requirements," and "Double-Walled Tank Requirements"). If a containment system complies fully with Sec. 264.193(c-e), the requirements of Sec. 264.193(b) will have been met.

Section 264.193(f) states that the requirements of Sec. 264.193(b) and (c) must be met for all ancillary equipment (see manual Sec. 7.8), <u>except</u> for the following equipment, provided that the equipment is visually inspected daily for leaks:

- piping that is completely aboveground;
- welded flanges, welded joints, and welded connections;
- sealless or magnetic-coupling pumps; and
- pressurized aboveground piping, with automatic shut-off devices (such as flow-check valves, flow-metering shutdown devices, etc.).

7.3 DESIGN PARAMETERS

<u>Citation</u>

The minimum design requirements for all secondary containment systems are stated in Sec. 264.193(c). To summarize, the secondary containment system:

(1) must be lined and/or constructed of materials compatible with the contained waste and designed to withstand pressure gradients (including static head and external hydrological forces), physical contact with any released waste, climatic conditions, and daily operational stresses (including those from nearby vehicular traffic).

(2) must be placed on a foundation which can support it, can withstand any foreseeable pressure gradients, and prevent failure due to settlement, compression, or uplift.
(3) must have a leak-detection system that will detect the presence of a release within 24 hours, unless it can be demonstrated that existing detection technologies or site conditions will not permit detection within 24 hours.
(4) must be sloped or operated to drain to remove any accumulated liquids resulting from spills, leaks, or precipitation within 24 hours unless it can be demonstrated that removal of the liquids cannot be accomplished within 24 hours.

Guidance

The relevant design parameters for a tank system's secondary containment system are described in Sec. 264.193(c). According to Sec. 264.196(a) and (b), if contaminated liquids from a tank release are found in a secondary containment system, action must be taken immediately to minimize the released quantity by stopping the flow of waste to the tank and, if necessary due to potential exposure, emptying the tank's contents into a secure containment device (another tank or container). The specific Sec. 264.193(c) requirements are discussed in the following subsections.

A) Compatibility and Strength

According to Sec. 264.193(c)(1), a secondary containment liner or material of construction must be compatible with its contained waste(s) to ensure the containment's integrity, thus preventing releases to the surrounding environment. Depending on a waste's chemical characteristics, a compatible liner must be selected. As described in Secs. 264.191(b)(2) and 264.192(a)(2), the owner or operator of a tank system must perform a detailed chemical and physical analysis of contained waste(s). This data, along with information from the Chemical Engineers' Handbook, the National Association of Corrosion Engineers (NACE), tank, liner, and resin manufacturers, on-site facility tests, and any other relevant sources, may be used to convince the EPA of the compatibility of a stored waste with its secondary containment. The EPA document entitled "Lining of Waste Impoundment and Disposal Facilities" (U.S. Department of Commerce, National Technical Information Service, Publication PB81-166365, 1980)

provides extensive information and references on establishing waste-liner compatibility.

It is necessary to consider all waste constituents when assessing the compatibility of a secondary containment liner or material of construction in a given storage or treatment application. An owner or operator is advised not to place incompatible wastes within a single, common secondary containment area without some sort of partition (e.g., berms) between the ncompatible wastes. Note that Sec. 264.193(e)(2)(iv) requires secondary containment concrete vaults to be provided with a coating that is compatible with any stored waste.

Secondary containment strength, generally a direct function of thickness for a given material, must be adequate to prevent failure and to, ensure continued and proper operation of the leak-detection device. The stresses referred to in Sec. 264.193(c)(1) may be caused by:

- pressure gradients, both vertical (from the weight of the tank and its contents and any backfill) and horizontal (from external hydrologic, i.e., ground water or saturated soil, pressure);

- waste contact, if the primary containment fails;

- adverse climatic conditions, such that the physical properties of a secondary containment system are altered; and

- daily operational activities, including nearby and overhead vehicular traffic.

Static vertical pressure gradients on a tank's secondary containment system are generally not a cause for concern if installation of the tank and its containment are performed properly. The static pressures below and above a containment should be in relative balance if the containment is adequately protected from punctures and from uneven load distribution (e.g., an underground tank seated improperly on backfill). Adequate

separation of an inground or underground tank from its secondary containment using homogeneous, rounded, porous, well-compacted backfill material will protect the containment (liner or vault) from damage. Aboveground tank secondary containment must be kept free of debris to protect the integrity of the containment material.

Horizontal pressure gradients generally are only a concern for an inground or an underground tank located in a region with a high ground-water table. If the ground water table is higher than the lowest point of a secondary containment system, the resulting inward pressure may be significant. If a liner is to be installed in an area of high ground water, the site must be dewatered until the liner, the tank, the piping, and the backfill have been installed (See Section 6.2 of this manual). The backfill, if properly installed, will more than offset the pressure or buoyant force exerted by the ground water once dewatering has been terminated. Liners and coatings on concrete vaults should be thick enough so that they remain impermeable in high ground water conditions. Test results on the impermeability of a material to water, over time, are useful to predict long-term integrity for a secondary containment material.

A tank's secondary containment must be compatible with a stored waste and structurally secure enough to retain any released waste material until it can be removed. Generally, the additional pressure of released wastes on the containment system will have only a minimal impact on the secondary containment's support capabilities.

Adverse climatic conditions can change the physical properties of a secondary containment system, potentially jeopardizing its strength and integrity. Test results on the ability of a containment material to withstand extremes in temperature, excessive moisture, ultraviolet radiation, high winds, etc., are useful to predict the ability of the material to remain secure.

The stresses of daily operation, such as from vehicular traffic, will not have significantly adverse effects on a secondary containment system if

the tank system is installed and operated properly. Site-specific conditions must be considered when determining if a secondary containment system has sufficient strength to maintain its integrity in the presence of any operational stresses. Such conditions may include traffic, heavy equipment, winds, precipitation, frost, and ground-water level (buoyant forces for underground and inground tanks).

B) Foundation Integrity

Sec. 264.193(c)(2) requires secondary containment to be properly supported in order to prevent structural failure from settlement, compression, or uplift, including the residual effects of installation. As discussed in document Section 7.3 (A), vertical pressure gradients should be relatively in balance if the backfill surrounding the containment is homogeneous, rounded, and porous. Compressive stresses should not be harmful to secondary containment material if the backfill does not contain debris or significant liquid from precipitation. The backfill below a containment should be compacted prior to the installation of the secondary containment system, and it should be particularly well-compacted for concrete vaults to prevent cracking caused by settlement.

In an area with a high ground-water table, a coated concrete vault or an anchored double-walled tank is the preferred method of secondary containment. A vault or an anchored double-walled tank is less likely to fail from uplift under this environmental condition. The water table at a tank facility may be either consistently or seasonally high, and the choice of a secondary containment system and the installation procedures should be based on the potential for a high water table to exist.

C) Leak-Detection Capability

The leak-detection portion of a secondary containment system, required under Sec. 264.193(b)(2) and described in more detail in Sec. 264.193(c)(3), is one of the most important components of a containment system. Early-warning leak-detection systems provide continuous surveillance for the presence of a leak or spill.

The types of early-warning monitoring systems most widely used for underground and inground tank systems are:

- o Systems that monitor the storage tank excavation. These types of systems include wire grids, observation wells, and U-tubes. The types of leak sensors used in these systems include:

  - thermal-conductivity sensors;
  - electrical-resistivity sensors;
  - vapor detectors.

- o Interstitial monitoring, e.g., monitoring for leaks between the walls of a dual - walled tank.

- o Daily Visual Monitoring. This method can be effective for aboveground or vaulted tanks, and for other tanks where access to potentially leaking parts is available. Daily visual monitoring can also be effective for the inspection of ancillary equipment.

- o Ancillary equipment leak detection. In addition to daily, visual inspections for aboveground tank systems, ancillary equipment of underground, inground, onground, or aboveground systems may be monitored by the use of the sensors mentioned above with the sensing elements being placed in the secondary containment of the ancillary equipment.

Electrical-resistivity and thermal-conductivity sensors and interstitial monitoring are also used with aboveground and onground tank systems. These leak-detection systems are described below.

1) TANK EXCAVATION MONITORING SYSTEMS

There are several types of leak-monitoring systems that may be employed using specific sensors (described in the following section, "LEAK SENSORS") to detect leaks in a tank storage or treatment area.

The leak-monitoring systems are discussed below, and include the following:

- o Wire grids
- o Observation wells
- o U-tubes

Table 7-1 shows the applicability of the various leak sensors to the different tank excavation monitoring systems.

Wire Grids. This type of leak-monitoring system employs electrical resistivity sensors in a wire grid located within the containment region. The wire grid is connected to a minicomputer that continuously monitors the electrical properties of each wire in the grid. If a leak occurs, the minicomputer can determine which wires in the grid have had their electrical properties altered, thereby identifying the location and extent of a leak. In the presence of a leak, the insulation around a grid wire or the wire itself will be dissolved, registering a change in resistivity. A drawback of this type of system is that it is susceptible to failure caused by damage from a spill.

Observation Wells. Observation wells are used in areas of high soil-water content. The wells typically consist of a four-inch diameter (Schedule 40) polyvinyl chloride (PVC) or slotted stainless steel pipe driven into a tank excavation within the secondary-containment system (see Figure 7-1). Wells typically have a well screen slot size of 0.02 inches, are extended to grade, and are covered with a waterproof cap. If slots are large enough to permit backfill to enter the well casing, the casing should be wrapped in filter fabric before backfilling.

U-tubes. A U-tube typically consists of a four-inch diameter (Schedule 40) PVC pipe, installed within the secondary containment system as shown in Figure 7-2. Another design configuration has

Figure 6-7
Underground Tank and Piping System

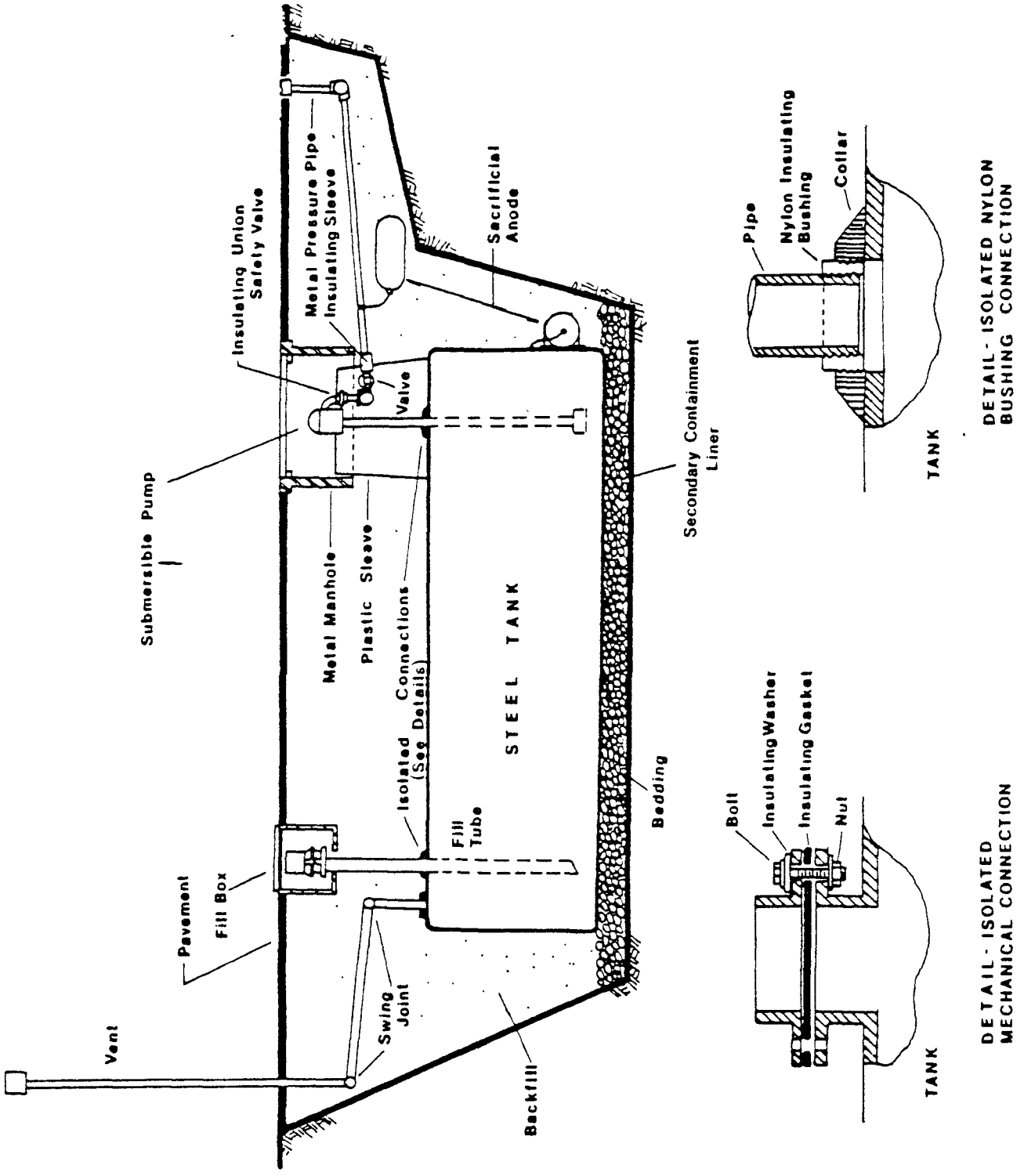

FIGURES ARE FOR ILLUSTRATIVE PURPOSES ONLY. THEY ARE NOT INTENDED FOR USE AS CONSTRUCTION DRAWINGS.

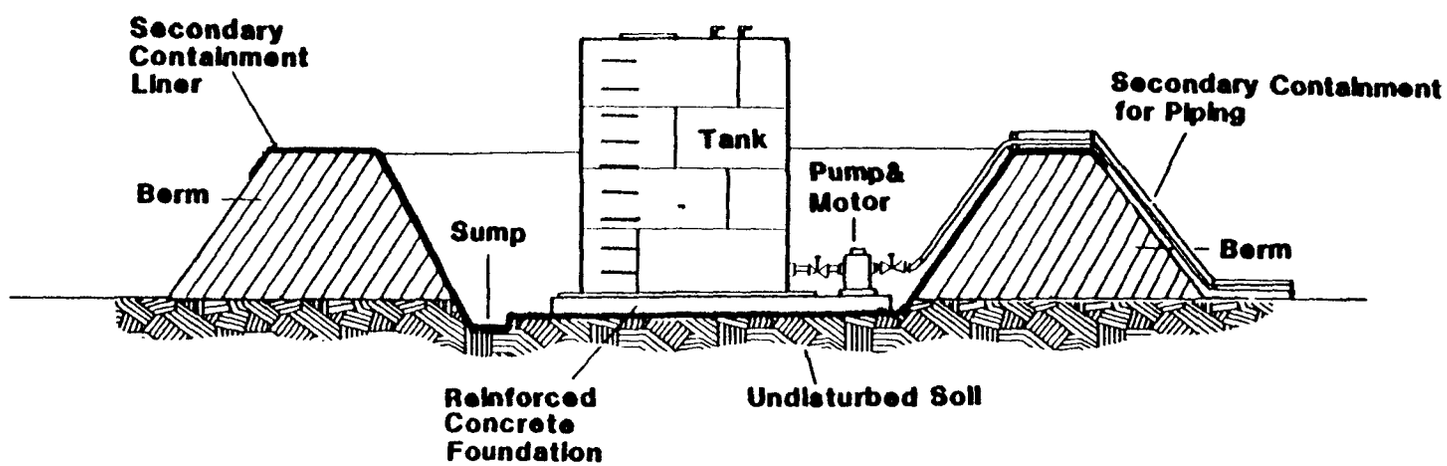

Note: Volume inside berms should be a minimum of 100% of the tank volume plus the precipitation from a 24 hour, 25 year storm

Figure 6-8
Aboveground Tank

FIGURES ARE FOR ILLUSTRATIVE PURPOSES ONLY THEY ARE NOT INTENDED FOR USE AS CONSTRUCTION DRAWINGS

the information provided under paragraph (a) (3) of this section or other corrosion protection if the Regional Administrator believes other corrosion protection is necessary to ensure the integrity of the tank system during use of the tank system. The installation of a corrosion protection system that is field fabricated must be supervised by an independent corrosion expert to ensure proper installation.

Guidance

Using the information obtained for the requirements of Sec. 264.192(2)(3), an independent corrosion expert (defined in Section 5.1) will be able to determine corrosion protection needs of a tank system for its intended lifetime. A corrosion expert must oversee the installation of any corrosion protection devices, particularly cathodic protection, that are field fabricated for a new tank system.

Information on cathodic-protection system construction, inspection, handling, electrical isolation, and installation details can be found in the National Association of Corrosion Engineers (NACE) Standards RP-02-85, "Recommended Practice--Control of External Corrosion on Metallic Buried, Partially Buried, or Submerged Liquid Storage Systems" (1985); RP-01-69, "Recommended Practice--Control of External Corrosion on Underground or Submerged Metallic Piping Systems" NACE (1983), and Petroleum Equipment Institute (PEI) standard PEI/RP 100-86, "Recommended Practices for Installation of Underground Liquid Storage Systems" (1986). (See document Section 5.4 for additional information on cathodic-protection system installation.)

6.6 CERTIFICATIONS OF DESIGN AND INSTALLATION

Citation

Following installation, Sec. 264.192(g) requires the owner or operator of a new tank system to:

...obtain and keep on file at the facility written statements by those "persons" required to certify the design of the tank system and supervise the installation of the tank system in accordance with the requirements of paragraphs (b) through (f) of this section, that attest that the tank system was properly designed and installed and that repairs, pursuant to paragraphs (b) and (d) of this section, were performed. These written

statements must also include the certification statement as required in §270.11(d) of this Chapter.

Guidance

The professional engineer who certifies a tank system's structural integrity, the installation inspector, the tightness tester, the corrosion expert, and anyone else who has supervised a portion of the design and installation of a new tank system or component must document that the system is in accordance with the requirements of Sec. 264.192(a-f). Materials accompanying and supporting these statements might include "as-built" installation drawings and photographs of tank and piping components.

A sample statement of the form required by Sec. 264.192(g), including the Section 270.11(d) truthfulness certification, follows:

> I, [Name], have supervised a portion of the design or installation of a new tank system or component located at [Address], and owned/operated by [Name(s)]. My duties were: [e.g., preinstallation inspection, testing for tightness, etc.], for the following tank system components [e.g., the tank, vent piping, etc.], as required by the Resource Conservation and Recovery Act (RCRA) regulation(s), namely, 40 CFR 264.192 [Applicable Paragraphs (i.e., a-f)].
>
> I certify under penalty of law that I have personally examined and am familiar with the information submitted in this document and all attachments and that, based on my inquiry of those individuals immediately responsible for obtaining the information, I believe that the information is true, accurate, and complete. I am aware that there are significant penalties for submitting false information, including the possibility of fine and imprisonment.
>
> _____
> Signature
>
> _____
> Title
>
> _____
> Registration No., if applicable
>
> _____
> Address

The certification statements must be kept on file indefinitely at the tank facility, as specified in Sec. 264.192(g).

6.7 DESCRIPTION OF TANK SYSTEM INSTALLATION

Citation

For the Part B application the owner or operator must provide a detailed description of how a new tank system will be installed, in accordance with Section 270.16(f):

> Sec. 270.16(f) for new tank systems, a detailed description of how the tank system(s) will be installed in compliance with Sec. 264.192(b), (c), (d), and (e);

Guidance

Section 270.16(f) requires that owners or operators provide a detailed description of the tank system installation with respect to the tank handling and installation procedures, the type and installation of backfill, the tightness testing results and methodology, and the installation of ancillary equipment. This description must be sufficiently detailed for the EPA to determine if the tank and its ancillary equipment, as installed, have sufficient integrity to prevent releases of waste to the environment during use. The description should describe handling and lifting methods used on-site and precautions taken to avoid weld breaks, punctures, scrapes of protective coatings, cracks, corrosion, and other structural damage. The description should also include precautions taken to avoid future damage due to settling, high water tables, frost heave, vibration, expansion, and contraction. For the tightness testing, the description should include the methodology, the results, conclusions, and any recommendations made or actions taken as a result of the testing.

6.8 SUMMARY OF MAJOR POINTS

The following summarizes the information covered in this section and should be used to assure the completeness of a Part B permit application:

- Is the installation inspector or registered engineer qualified to inspect a new tank system or component prior to installation? Can this individual discriminate between reparable and irreparable damages and defects? Can he/she assess the adequacy of a repair?

- Has he/she inspected the tank system during installation for the presence of at least the following:

  -- Weld breaks;
  -- Punctures;
  -- Scrapes of protective coatings;
  -- Cracks;
  -- Corrosion; and
  -- Other structural damage or inadequate construction/installation.

  Have all such problems been remedied before the system was placed in use?

- Is the backfill noncorrosive, porous, homogeneous? Are the dimensions of the tank excavation adequate? Has the backfill been placed and compacted carefully around the tank?

- Does the tank pass a test for tightness? Does the piping system pass an analogous test?

- Is the piping system adequately supported and protected against damage from external and internal loads?

- Has a corrosion expert supervised the installation of any field-fabricated corrosion protection, particularly cathodic-protection devices?

- Have statements been written by the appropriate personnel to certify that the tank system is properly designed and installed? Are these statements on file at the facility?

- Has a detailed description of the tank system installation and tightness testing been provided?

In addition, see Appendix A, "Completeness Checklist," to verify compliance with the requirements of this section.

7.0 SECONDARY CONTAINMENT SYSTEMS AND RELEASE DETECTION

Under the Sec. 264.193(a) regulations, all hazardous waste tank systems, except those specifically exempted in Sec. 264.190(a) and (b), will be required to be either installed or retrofitted with secondary containment, including a leak-detection capability, within a specific period of time. Tank systems with newly listed hazardous wastes are also subject to the Sec. 264.193 secondary containment system requirements. The only exceptions to the secondary containment requirements will be granted to those owners or operators who demonstrate successfully that their tank systems qualify for a variance from the requirements under Sec. 264.193(g) (see Section 8.0 of this document for further information on variances).

EPA has determined that secondary containment with interstititial monitoring is the only proven technique for guarding against releases to ground and surface waters. The primary advantage of secondary containment is that is allows for detection of leaks from the primary or inner tank while providing a secondary barrier that contains releases before they enter the environment. Secondary containment also provides protection from spills caused by operational errors, such as overfilling. All waste and precipitation collected by the secondary containment system must be promptly removed in accordance with all local and federal regulations.

The types of tank secondary containment systems that are acceptable under Sec. 264.193(d) are liners (external to tanks), vaults, double-walled tanks, concrete bases with diking, and equivalent systems as approved by a Regional Administrator of the Environmental Protection Agency (EPA). Liners cover the edges of a tank excavation to prevent migration of any released substances to the environment. They are generally constructed of low permeability natural material (such as clay) or of synthetic membrane (such as polyvinyl chloride). Vaults, generally constructed of concrete and lined with a nonporous coating (required under Sec. 264.193(e)(2)(iv)), act as chambers that temporarily contain any released materials. Vaults are usually designed to allow inspection of the enclosed tank for leaks. Double-walled tanks hold

leakage in the interstitial space between the inner and outer tank walls, thus preventing releases to the environment.

Information pertaining to the plans and descriptions of secondary containment systems must be included in Part B of the permit application, as specified in Sec. 270.16(g)--"Detailed plans and description of how the secondary containment system for each tank system is or will be designed, constructed, and operated to meet the requirements of Secs. 264.193(a), (b), (c), (d), (e), and (f)." Detailed guidance is provided in the following sections.

7.1 SECONDARY CONTAINMENT IMPLEMENTATION SCHEDULE

Citation

Sec. 264.193(a) defines the federally mandated implementation schedule for installation of secondary containment for new and existing tanks, as of the effective date of the amended Regulations (Jan. 12,1987):*

(1) For all new tank systems or components, prior to their being put into service;
(2) For all existing tank systems used to store or treat EPA Hazardous Waste Nos. F020, F021,F022, F023, F026, and F027, within two years after January 12, 1987.
(3) For those existing tank systems of known and documented age, within two years after January 12, 1987 or when the tank system has reached 15 years of age, whichever comes later; and
(4) For those existing tank systems for which the age cannot be documented, within eight years of January 12, 1987; but if the age of the facility is greater than seven years, secondary containment must be provided by the time the facility reaches 15 years of age, or within two years by January 12, 1987, whichever comes later; and
(5) For tank systems that store or treat materials that become hazardous wastes subsequent to January 12, 1987, within the time intervals required in paragraphs (a)(1) through (a)(4) of this section, except that the date that material becomes a hazardous waste must be used in place of January 12, 1987).

* Applicable State regulations should be consulted to determine if a State mandated schedule is in effect.

Guidance

The Sec. 264.193(a) regulations require that tank systems posing the greatest risks receive the most immediate attention and that new tank systems install secondary containment prior to being placed in use, since it is most feasible to install containment at that time. Tank systems containing certain listed dioxin wastes (Sec. 264.193(a)(2)) and those that are 15 years of age are considered to be of greatest risk to human health and the environment.Such tank systems have a maximum of two years from the effective date of these regulations to install secondary containment.

Documentation of the age of a tank system may be provided by a bill of sale, dated engineering drawings of a facility, or any other written proof of tank system installation. Even if a tank system has not contained hazardous waste for 15 years, the tank system may have deteriorated during its service lifetime. Thus, the documented age desired by the EPA is the actual age of a tank system, not the period the system held hazardous waste.

7.2 PROPERTIES OF A SECONDARY CONTAINMENT SYSTEM

Citation

As stated in Sec. 264.193(b) of the Part B permit application regulations, a tank system's secondary containment must be:

(1) Designed, installed, and operated to prevent any migration of wastes or accumulated liquid out of the system to the soil, ground water, or surface water at any time during the use of the tank system; and
(2) Capable of detecting and collecting releases and accumulated liquids until the collected material is removed.

Guidance

The requirements for tank system secondary containment are meant to ensure that no waste is released to the surrounding environment. Sec. 264.193(b) lists the necessary characteristic design properties of an effective secondary

containment system, and Sec. 264.193(c) elaborates upon them (see Sec. 7.3 of this manual, "Design Parameters"). Section 264.193(d) lists devices that will meet the criteria for effective secondary containment. Finally, Sec. 264.193(e) provides further requirements for these systems (see Sections 7.5-7.7 of this document, "Liner Requirements," "Vault Requirements," and "Double-Walled Tank Requirements"). If a containment system complies fully with Sec. 264.193(c-e), the requirements of Sec. 264.193(b) will have been met.

Section 264.193(f) states that the requirements of Sec. 264.193(b) and (c) must be met for all ancillary equipment (see manual Sec. 7.8), <u>except</u> for the following equipment, provided that the equipment is visually inspected daily for leaks:

- piping that is completely aboveground;
- welded flanges, welded joints, and welded connections;
- sealless or magnetic-coupling pumps; and
- pressurized aboveground piping, with automatic shut-off devices (such as flow-check valves, flow-metering shutdown devices, etc.).

7.3 DESIGN PARAMETERS

<u>Citation</u>

The minimum design requirements for all secondary containment systems are stated in Sec. 264.193(c). To summarize, the secondary containment system:

(1) must be lined and/or constructed of materials compatible with the contained waste and designed to withstand pressure gradients (including static head and external hydrological forces), physical contact with any released waste, climatic conditions, and daily operational stresses (including those from nearby vehicular traffic).

(2) must be placed on a foundation which can support it, can withstand any foreseeable pressure gradients, and prevent failure due to settlement, compression, or uplift.
(3) must have a leak-detection system that will detect the presence of a release within 24 hours, unless it can be demonstrated that existing detection technologies or site conditions will not permit detection within 24 hours.
(4) must be sloped or operated to drain to remove any accumulated liquids resulting from spills, leaks, or precipitation within 24 hours unless it can be demonstrated that removal of the liquids cannot be accomplished within 24 hours.

Guidance

The relevant design parameters for a tank system's secondary containment system are described in Sec. 264.193(c). According to Sec. 264.196(a) and (b), if contaminated liquids from a tank release are found in a secondary containment system, action must be taken immediately to minimize the released quantity by stopping the flow of waste to the tank and, if necessary due to potential exposure, emptying the tank's contents into a secure containment device (another tank or container). The specific Sec. 264.193(c) requirements are discussed in the following subsections.

A) Compatibility and Strength

According to Sec. 264.193(c)(1), a secondary containment liner or material of construction must be compatible with its contained waste(s) to ensure the containment's integrity, thus preventing releases to the surrounding environment. Depending on a waste's chemical characteristics, a compatible liner must be selected. As described in Secs. 264.191(b)(2) and 264.192(a)(2), the owner or operator of a tank system must perform a detailed chemical and physical analysis of contained waste(s). This data, along with information from the Chemical Engineers' Handbook, the National Association of Corrosion Engineers (NACE), tank, liner, and resin manufacturers, on-site facility tests, and any other relevant sources, may be used to convince the EPA of the compatibility of a stored waste with its secondary containment. The EPA document entitled "Lining of Waste Impoundment and Disposal Facilities" (U.S. Department of Commerce, National Technical Information Service, Publication PB81-166365, 1980)

provides extensive information and references on establishing waste-liner compatibility.

It is necessary to consider all waste constituents when assessing the compatibility of a secondary containment liner or material of construction in a given storage or treatment application. An owner or operator is advised not to place incompatible wastes within a single, common secondary containment area without some sort of partition (e.g., berms) between the ncompatible wastes. Note that Sec. 264.193(e)(2)(iv) requires secondary containment concrete vaults to be provided with a coating that is compatible with any stored waste.

Secondary containment strength, generally a direct function of thickness for a given material, must be adequate to prevent failure and to, ensure continued and proper operation of the leak-detection device. The stresses referred to in Sec. 264.193(c)(1) may be caused by:

- pressure gradients, both vertical (from the weight of the tank and its contents and any backfill) and horizontal (from external hydrologic, i.e., ground water or saturated soil, pressure);

- waste contact, if the primary containment fails;

- adverse climatic conditions, such that the physical properties of a secondary containment system are altered; and

- daily operational activities, including nearby and overhead vehicular traffic.

Static vertical pressure gradients on a tank's secondary containment system are generally not a cause for concern if installation of the tank and its containment are performed properly. The static pressures below and above a containment should be in relative balance if the containment is adequately protected from punctures and from uneven load distribution (e.g., an underground tank seated improperly on backfill). Adequate

separation of an inground or underground tank from its secondary containment using homogeneous, rounded, porous, well-compacted backfill material will protect the containment (liner or vault) from damage. Aboveground tank secondary containment must be kept free of debris to protect the integrity of the containment material.

Horizontal pressure gradients generally are only a concern for an inground or an underground tank located in a region with a high ground-water table. If the ground water table is higher than the lowest point of a secondary containment system, the resulting inward pressure may be significant. If a liner is to be installed in an area of high ground water, the site must be dewatered until the liner, the tank, the piping, and the backfill have been installed (See Section 6.2 of this manual). The backfill, if properly installed, will more than offset the pressure or buoyant force exerted by the ground water once dewatering has been terminated. Liners and coatings on concrete vaults should be thick enough so that they remain impermeable in high ground water conditions. Test results on the impermeability of a material to water, over time, are useful to predict long-term integrity for a secondary containment material.

A tank's secondary containment must be compatible with a stored waste and structurally secure enough to retain any released waste material until it can be removed. Generally, the additional pressure of released wastes on the containment system will have only a minimal impact on the secondary containment's support capabilities.

Adverse climatic conditions can change the physical properties of a secondary containment system, potentially jeopardizing its strength and integrity. Test results on the ability of a containment material to withstand extremes in temperature, excessive moisture, ultraviolet radiation, high winds, etc., are useful to predict the ability of the material to remain secure.

The stresses of daily operation, such as from vehicular traffic, will not have significantly adverse effects on a secondary containment system if

the tank system is installed and operated properly. Site-specific conditions must be considered when determining if a secondary containment system has sufficient strength to maintain its integrity in the presence of any operational stresses. Such conditions may include traffic, heavy equipment, winds, precipitation, frost, and ground-water level (buoyant forces for underground and inground tanks).

B) Foundation Integrity

Sec. 264.193(c)(2) requires secondary containment to be properly supported in order to prevent structural failure from settlement, compression, or uplift, including the residual effects of installation. As discussed in document Section 7.3 (A), vertical pressure gradients should be relatively in balance if the backfill surrounding the containment is homogeneous, rounded, and porous. Compressive stresses should not be harmful to secondary containment material if the backfill does not contain debris or significant liquid from precipitation. The backfill below a containment should be compacted prior to the installation of the secondary containment system, and it should be particularly well-compacted for concrete vaults to prevent cracking caused by settlement.

In an area with a high ground-water table, a coated concrete vault or an anchored double-walled tank is the preferred method of secondary containment. A vault or an anchored double-walled tank is less likely to fail from uplift under this environmental condition. The water table at a tank facility may be either consistently or seasonally high, and the choice of a secondary containment system and the installation procedures should be based on the potential for a high water table to exist.

C) Leak-Detection Capability

The leak-detection portion of a secondary containment system, required under Sec. 264.193(b)(2) and described in more detail in Sec. 264.193(c)(3), is one of the most important components of a containment system. Early-warning leak-detection systems provide continuous surveillance for the presence of a leak or spill.

The types of early-warning monitoring systems most widely used for underground and inground tank systems are:

- o Systems that monitor the storage tank excavation. These types of systems include wire grids, observation wells, and U-tubes. The types of leak sensors used in these systems include:

  - thermal-conductivity sensors;
  - electrical-resistivity sensors;
  - vapor detectors.

- o Interstitial monitoring, e.g., monitoring for leaks between the walls of a dual - walled tank.

- o Daily Visual Monitoring. This method can be effective for aboveground or vaulted tanks, and for other tanks where access to potentially leaking parts is available. Daily visual monitoring can also be effective for the inspection of ancillary equipment.

- o Ancillary equipment leak detection. In addition to daily, visual inspections for aboveground tank systems, ancillary equipment of underground, inground, onground, or aboveground systems may be monitored by the use of the sensors mentioned above with the sensing elements being placed in the secondary containment of the ancillary equipment.

Electrical-resistivity and thermal-conductivity sensors and interstitial monitoring are also used with aboveground and onground tank systems. These leak-detection systems are described below.

1) TANK EXCAVATION MONITORING SYSTEMS

There are several types of leak-monitoring systems that may be employed using specific sensors (described in the following section, "LEAK SENSORS") to detect leaks in a tank storage or treatment area.

The leak-monitoring systems are discussed below, and include the following:

- o Wire grids
- o Observation wells
- o U-tubes

Table 7-1 shows the applicability of the various leak sensors to the different tank excavation monitoring systems.

Wire Grids. This type of leak-monitoring system employs electrical resistivity sensors in a wire grid located within the containment region. The wire grid is connected to a minicomputer that continuously monitors the electrical properties of each wire in the grid. If a leak occurs, the minicomputer can determine which wires in the grid have had their electrical properties altered, thereby identifying the location and extent of a leak. In the presence of a leak, the insulation around a grid wire or the wire itself will be dissolved, registering a change in resistivity. A drawback of this type of system is that it is susceptible to failure caused by damage from a spill.

Observation Wells. Observation wells are used in areas of high soil-water content. The wells typically consist of a four-inch diameter (Schedule 40) polyvinyl chloride (PVC) or slotted stainless steel pipe driven into a tank excavation within the secondary-containment system (see Figure 7-1). Wells typically have a well screen slot size of 0.02 inches, are extended to grade, and are covered with a waterproof cap. If slots are large enough to permit backfill to enter the well casing, the casing should be wrapped in filter fabric before backfilling.

U-tubes. A U-tube typically consists of a four-inch diameter (Schedule 40) PVC pipe, installed within the secondary containment system as shown in Figure 7-2. Another design configuration has

TABLE 7-1

APPLICABILITY OF TYPES OF LEAK SENSORS

Sensor Type	Surveillance Method		
	Wire Grids	Observation Wells	U-tubes
Thermal Conductivity		X	X
Electrical Resistivity	X	X	X
Vapor Detectors		X	X
Sampling		X	X

Source: New York State Department of Environmental Conservation, "Technology for the Storage of Hazardous Liquids--A State-of-the-Art Review," (January 1983), p. 96.

multiple U-tubes, installed in multiple pipe runs under a tank to maximize detection potential. The tank excavation bottom should be sloped a minimum of 1/4-inch vertical per foot horizontal toward the U-tube to permit collection of any leaked material. The horizontal segment of each pipe is half-slotted (typical slot size, 0.06 inches), wrapped with a mesh cloth to prevent backfill infiltration, and sloped toward a sump, with a slope of approximately 1/4-inch vertical per foot horizontal. At the higher end of the horizontal pipes, there is a 90 degree sweep to vertical pipes that extend to grade. At the lower end of each horizontal pipe, there is a tee connection with another vertical pipe, which is extended to grade and to two feet below the tee to act as a collection sump. All vertical pipe sections are unperforated, and the bottom of the sump is sealed to be leakproof. The openings at grade are provided with watertight caps that can be sealed. It is imperative that all openings be secured to prevent water or runoff from entering them. U-tubes can be designed to allow pressurized flow to force collected liquids out.

The U-tube is a relatively new design which has not been extensively tested in the field. When installed with an underlying impervious liner, a U-tube will collect all liquids moving downward through the soil in the vicinity of a tank, including rainwater. This design provides positive assurance of collecting leakage from a tank, but presents a problem with removal of rainwater which can flood out the leak-detection/collection system. A waterproof cap will eliminate this problem.

2) LEAK SENSORS

A tank excavation monitoring system, described above, is designed to detect a spill or leak before contamination spreads beyond a lined tank excavation or a vault. The leak- or spill-sensing devices that may be used in tank excavation monitoring systems include thermal conductivity sensors, electrical resistivity sensors, and vapor

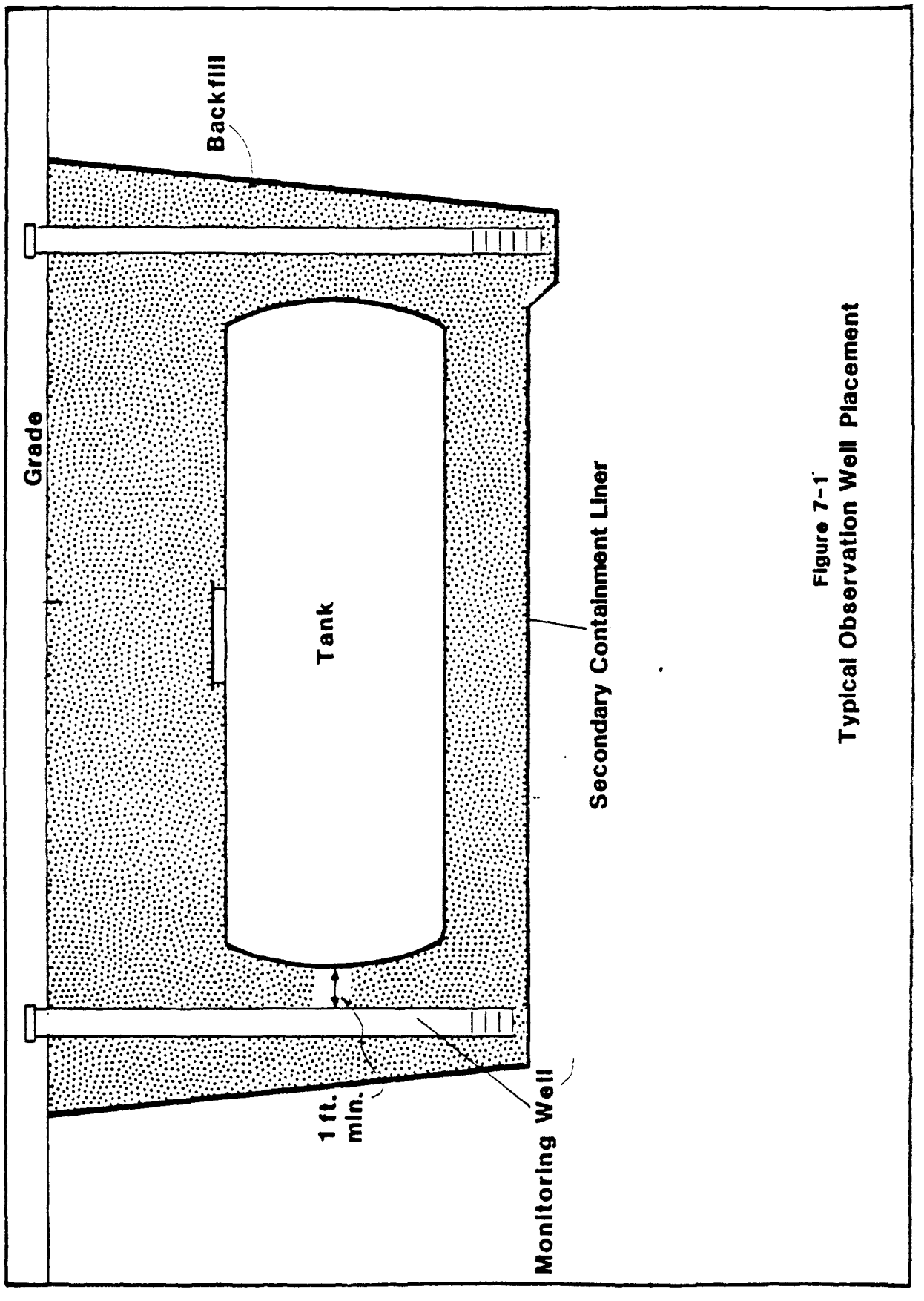

Figure 7-1
Typical Observation Well Placement

FIGURES ARE FOR ILLUSTRATIVE PURPOSES ONLY. THEY ARE NOT INTENDED FOR USE AS CONSTRUCTION DRAWINGS

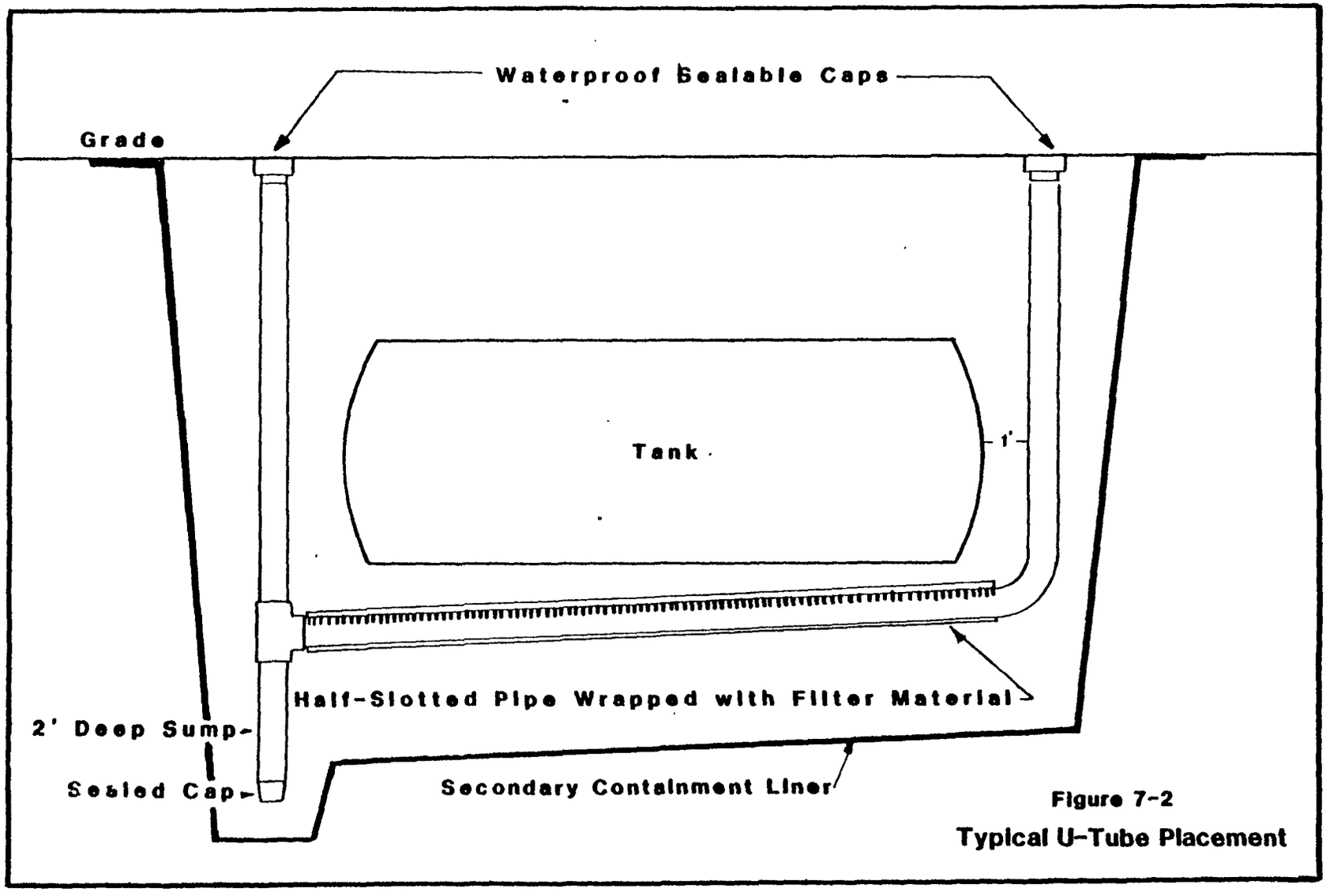

Figure 7-2
Typical U-Tube Placement

FIGURES ARE FOR ILLUSTRATIVE PURPOSES ONLY THEY ARE NOT INTENDED FOR USE AS CONSTRUCTION DRAWINGS

detectors. Direct sampling can also be used in the case of observation wells and U-tubes to pinpoint the occurrence and source of a leak. (See Table 7-2 for a comparison of various leak-sensing techniques.) The following subsections describe the various leak sensors.

Thermal-Conductivity Sensors. These sensors detect changes in the thermal conductivity of the surrounding environment to determine if a leak or spill has occurred. They can be used in wet or dry applications and are particularly good for detecting hydrocarbons, such as alcohols and trichloroethylene.

A system using such a sensor typically consists of an electronic control device that is connected by cable to a thermal-conductivity probe. The probe is fitted with a thermal-conductivity sensor that determines if a monitored area is dry, wet with water, or wet with some other substance. The control device may be located up to 1,000 feet from the probe and can continuously indicate the site condition using indicator lights. A nonwater liquid can be indicated by an audible alarm and recorded by a chart recorder. A relay contact that can activate external alarms, recovery pumps, or other automatic controls can also be provided.

Electrical-Resistivity Sensors. One system employing this leak-detection device relies on the change in resistance of a wire from exposure to a stored material to indicate the presence of a leak or spill. The key to sensors of this type is the use of wires or wire coatings that are highly susceptible to degradation when exposed to a stored or treated waste. For example, bare steel wires may be used in acid storage areas, or bare aluminum wires may be used in caustic storage areas. If a stored liquid is not corrosive to metal wire, the wire must be coated with a degradable material, such as a rubber coating in areas storing aromatic solvents. The wires are, in turn, connected to an electrical device that passes current through them. Any degradation of the wire or its coating will result in a

TABLE 7-2

COMPARISON OF VARIOUS LEAK-SENSING TECHNIQUES

Sensor	Applications	Advantages/Disadvantages
Thermal-Conductivity Sensors	Can monitor liquids in soils	Primary advantage is early detection, which makes it possible for leaks and spills to be corrected before large volumes of material are discharged.
Electrical-Resistivity Sensors	Can monitor liquids in soils	Primary advantage is the early detection of spills. Once a leak or spill is detected, the sensors must be replaced. Can detect small and large leaks.
Vapor Detectors	Monitors vapor in areas of highly permeable, dry soil, such as excavation backfill or other permeable soils	Very useful for quick detection of highly volatile wastes.
Interstitial Monitoring in Double-Walled Tanks	Measures changes of pressure or the interstitial presence of liquids in double-walled tanks	Accurate technique which is applicable to all double-walled tanks.

SOURCE: New York State Department of Environmental Conservation, "Technology for the Storage of Hazardous Liquids--A State-of-the-Art Review" (January 1983), p. 92.

significant change in circuit resistivity, indicating the existence of a product leak or spill.

This type of electrical-resistivity sensor is applicable for either wet or dry excavation applications. Ambient temperature and soil moisture have minimal effects on sensors of this type, particularly if coated wires are used. The two drawbacks of this type of leak-detection device are:

- Once a leak has been detected, the sensing wire must be replaced.

- The sensors cannot be used in previously contaminated soil unless the contamination has been removed. Otherwise, the sensors will deteriorate rapidly and require replacement.

Another common electrical-resistivity system is provided by an electrical probe and float mechanism suspended in an observation well on a flexible cable. This system is designed only for hydrocarbon detection because hydrocarbons are non-conductive. Chemical materials heavier than water or polar materials that are conductive will confuse the response.

If the well is dry, the probe extends to the bottom, with the float resting on the dry surface, and the monitor station registers a dry environment (green light). Upon liquid incursion of 1/16 inch or more, the float rises and the monitor station reflects the change in condition. If the liquid is water, the electrical terminal posts mounted in the float allow a low-voltage current to flow between them, and the monitor station reflects this condition with a yellow warning light. If, however, the liquid is a hydrocarbon, then no current will flow. The monitoring station will signal this condition with a red light and a buzzer to alert a tank operator that a release has occurred.

The control units associated with electrical-resistivity sensors can be designed to interface with audible alarms, visual alarms (e.g., indicator lights), and with control equipment, such as pumps, valves, and computers. Occasional checks of such systems are required to ensure that the power supply and the controls are in working order.

Vapor Detectors. These devices can detect a large number of combustible and non-combustible gases and vapors. They are generally applicable in areas of permeable soil or backfill, where gases and vapors are likely to migrate easily. Vapor detectors are particularly useful in instances where a waste stored underground is highly volatile and the storage excavation is relatively dry (free of water).

There are a wide variety of both portable and permanent gas-detection devices available that may be operated in conjunction with audible or visual alarm systems.

3) INTERSTITIAL MONITORING (Leak-detection)

An early-warning monitoring technique used in double-walled tanks involves monitoring the space between the inner and outer walls of a tank, using either a pressure or a fluid sensor. A pressure sensor may be used to monitor a tank that either has a vacuum in the space between the walls or has the space pressurized. Failure of either the inner or outer wall is detected by a loss of vacuum or pressure.

Fluid sensors may be employed between the tank walls to detect the presence of a liquid. The liquid may enter the interstitial space because of failure of the inner wall (leaking stored waste) or of the outer wall (leaking incoming water).

Another method uses the fluid which is part of the tank system; i.e., a loss of fluid is indication of failure of inner or outer wall.

D) Adequate Drainage

Section 264.193(c)(4) states that a secondary containment system must be sloped or otherwise designed and/or operated so that liquids will drain to the leak-detection system and can thus be removed. Typically, any released tank contents will drain along the top of a sloped containment (liner or vault) or through a porous drainage layer within the containment to reach a sump, trough, or similar device (see Figure 7-3). The accumulated liquids then can be withdrawn by siphoning or pumping from a collection area.

An aboveground containment system must be surrounded by impermeable curbs, gutters, dikes, etc. (usually constructed of concrete or asphalt) to prevent flow from leaving the containment area. Diked areas should be equipped with manual release valves, siphons, or pumps to permit removal of collected liquids. Valves should be chained and locked in a closed position when not in use. Any wastes in a tank or in ancillary equipment that drains to a secondary containment system should be removed within 24 hours or as soon as practicable to minimize risks to human health and the environment. If the collected material is hazardous as defined by 40 CFR 261 ("Identification and Listing of Hazardous Waste"), it must be managed in accordance with all applicable requirements of Parts 262 through 265 of RCRA ("Standards Applicable to Generation of Hazardous Waste"; "Standards Applicable to Transporters of Hazardous Waste"; "Standards for Owners and Operators of Hazardous Waste Treatment"; "Interim Status Standards for Owners and Operators of Hazardous Waste Treatment, Storage, and Disposal Facilities"). If the collected material is discharged through a point source to waters of the United States, it is subject to the requirements of Secs. 301, 304, and 402 of the Clean Water Act, as amended. If the material is discharged to a Publicly Owned Treatment Works (POTW), it is subject to the provisions of Sec. 307 of the Clean Water Act, as amended. If the material is released to the environment outside the secondary containment system, it may be subject to the reporting requirements of 40 CFR Part 302.

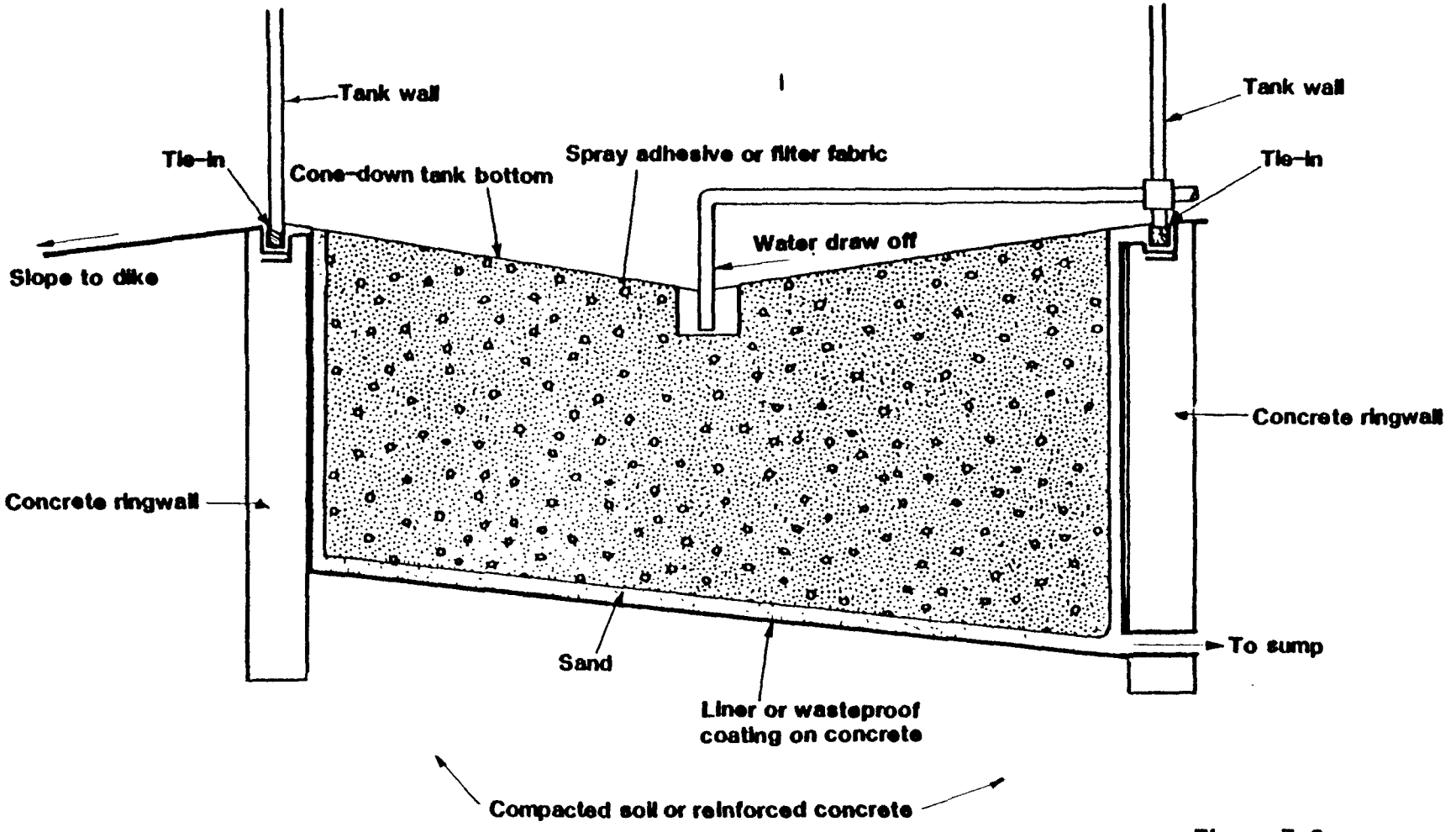

Figure 7-3
Secondary Containment for Aboveground Tank

FIGURES ARE FOR ILLUSTRATIVE PURPOSES ONLY. THEY ARE NOT INTENDED FOR USE AS CONSTRUCTION DRAWINGS

7.4 TYPES OF SECONDARY CONTAINMENT

Secondary containment for aboveground, onground, inground, and underground tanks must include one of the following devices: (1) a liner external to the tank (Figures 7-4, 7-5); (2) a vault (Figure 7-6); (3) a double-walled tank (Figures 7-7, 7-8); or (4) an equal device approved by the EPA Regional Administrator, as specified in Sec. 264.193(c)(1-4). Both liners and vaults may have one or more tanks located within the secondary containment area.

An example of an innovative "equivalent device" that may be approved by a Regional Administrator is an internal double bottom welded within an aboveground tank. In this example, Sec. 264.193 requirements for release detection and for complete secondary containment can be met by constructing an interstitial-monitoring system and an impermeable berm for the aboveground portions of the tank system, respectively. All equivalent applications must demonstrate that the devices have sufficient structural integrity to collect releases and to allow for waste removal, as per Sec. 264.193.

Sections 7.5, 7.6, and 7.7 of this document cite the specific regulatory requirements for each type of tank secondary containment system and provide guidance for achieving the Sec. 264.193(d) standards.

7.5 LINER REQUIREMENTS

Citation

Section 264.193(e)(1) states that a tank excavation liner must be:

(i) Designed or operated to contain 100 percent of the capacity of the largest tank within its boundary;
(ii) Designed or operated to prevent run-on or infiltration of precipitation into the secondary containment system unless the collection system has sufficient excess capacity to contain run-on or infiltration. Such additional capacity must be sufficient to contain precipitation from a 25-year, 24-hour rainfall event.
(iii) Free of cracks or gaps; and

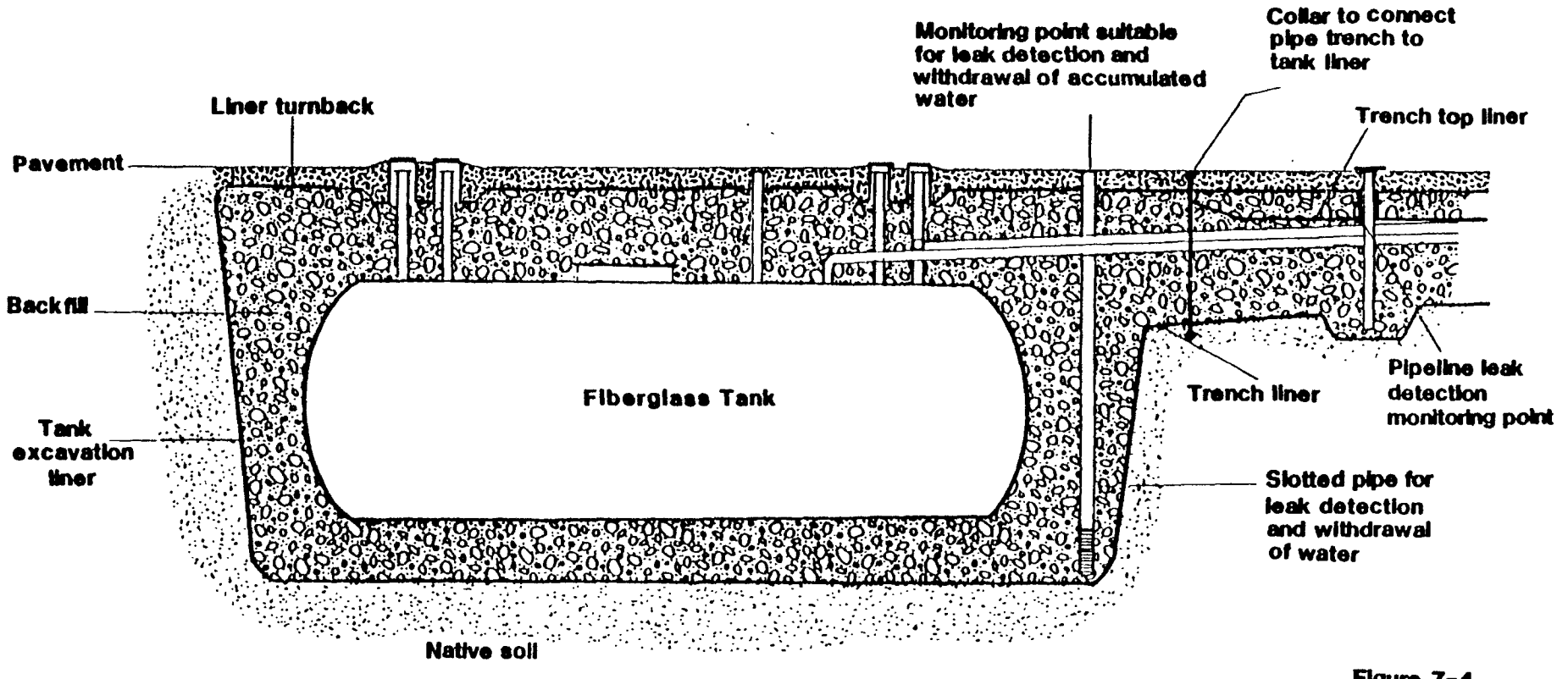

Figure 7-4
Tank with External Liner

FIGURES ARE FOR ILLUSTRATIVE PURPOSES ONLY. THEY ARE NOT INTENDED FOR USE AS CONSTRUCTION DRAWINGS

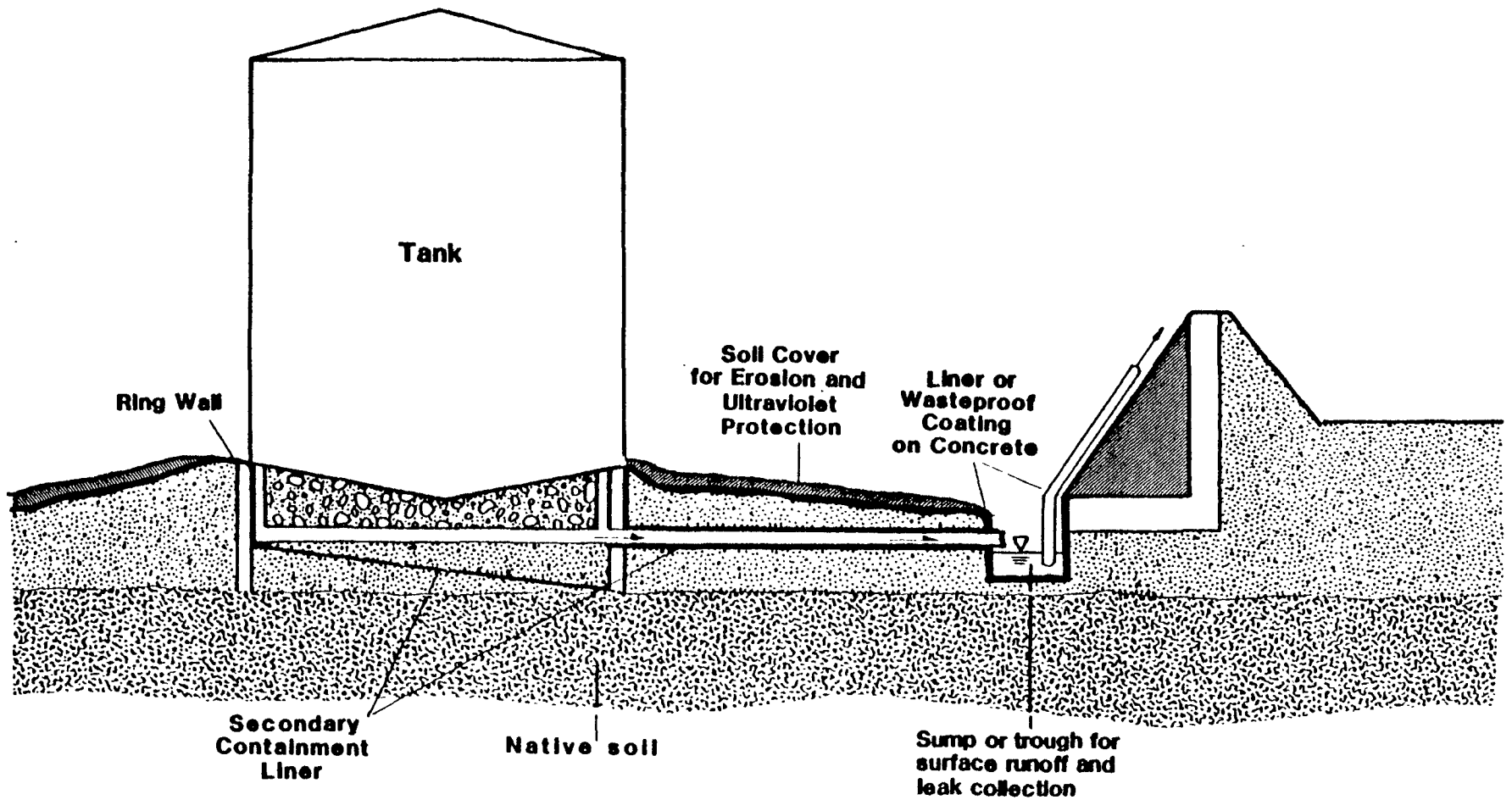

Figure 7-3
New Aboveground Tank

FIGURES ARE FOR ILLUSTRATIVE PURPOSES ONLY THEY ARE NOT INTENDED FOR USE AS CONSTRUCTION DRAWINGS

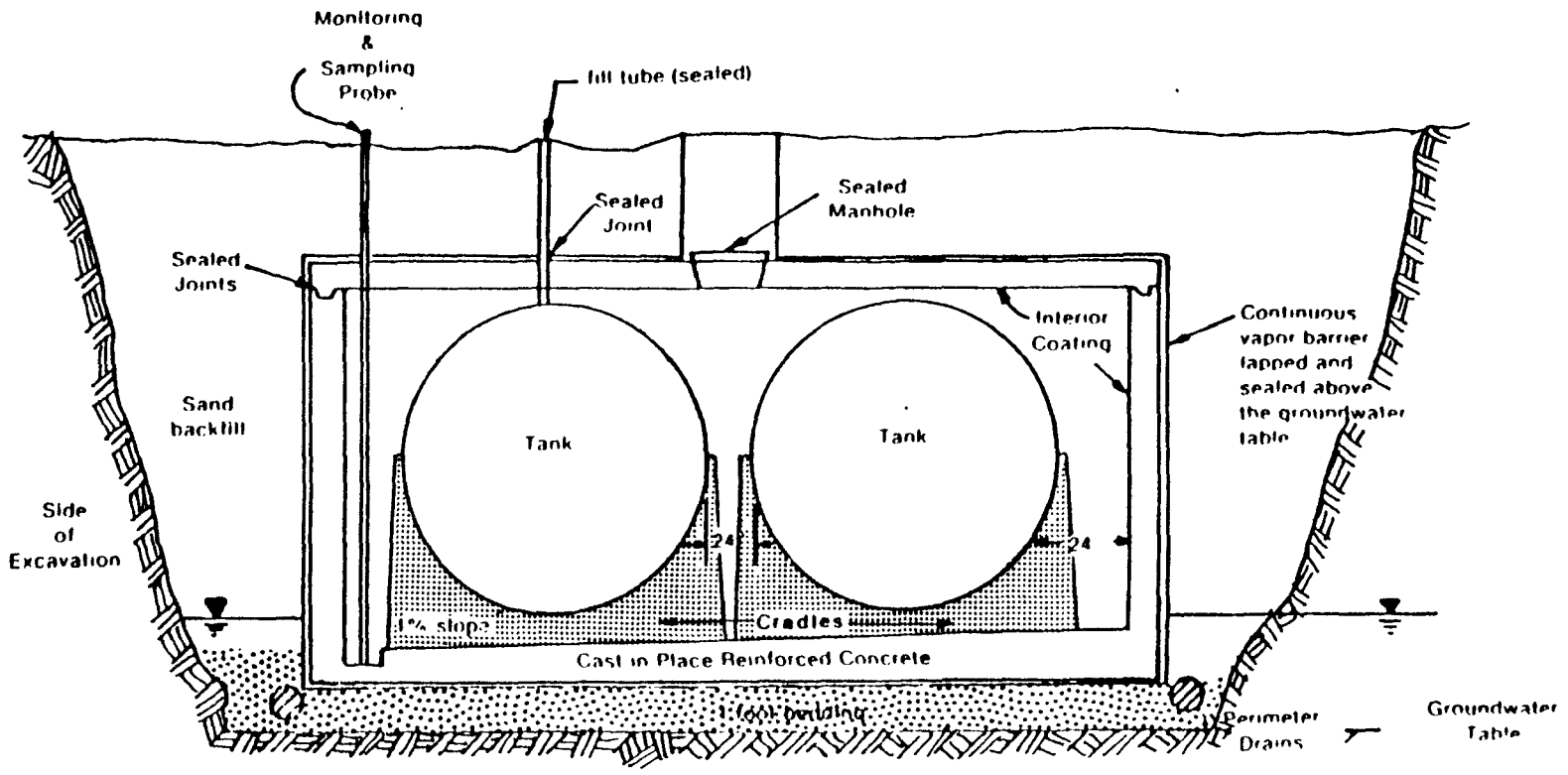

Figure 7-6
Multiple Tanks in a Vault

FIGURES ARE FOR ILLUSTRATIVE PURPOSES ONLY. THEY ARE NOT INTENDED FOR USE AS CONSTRUCTION DRAWINGS

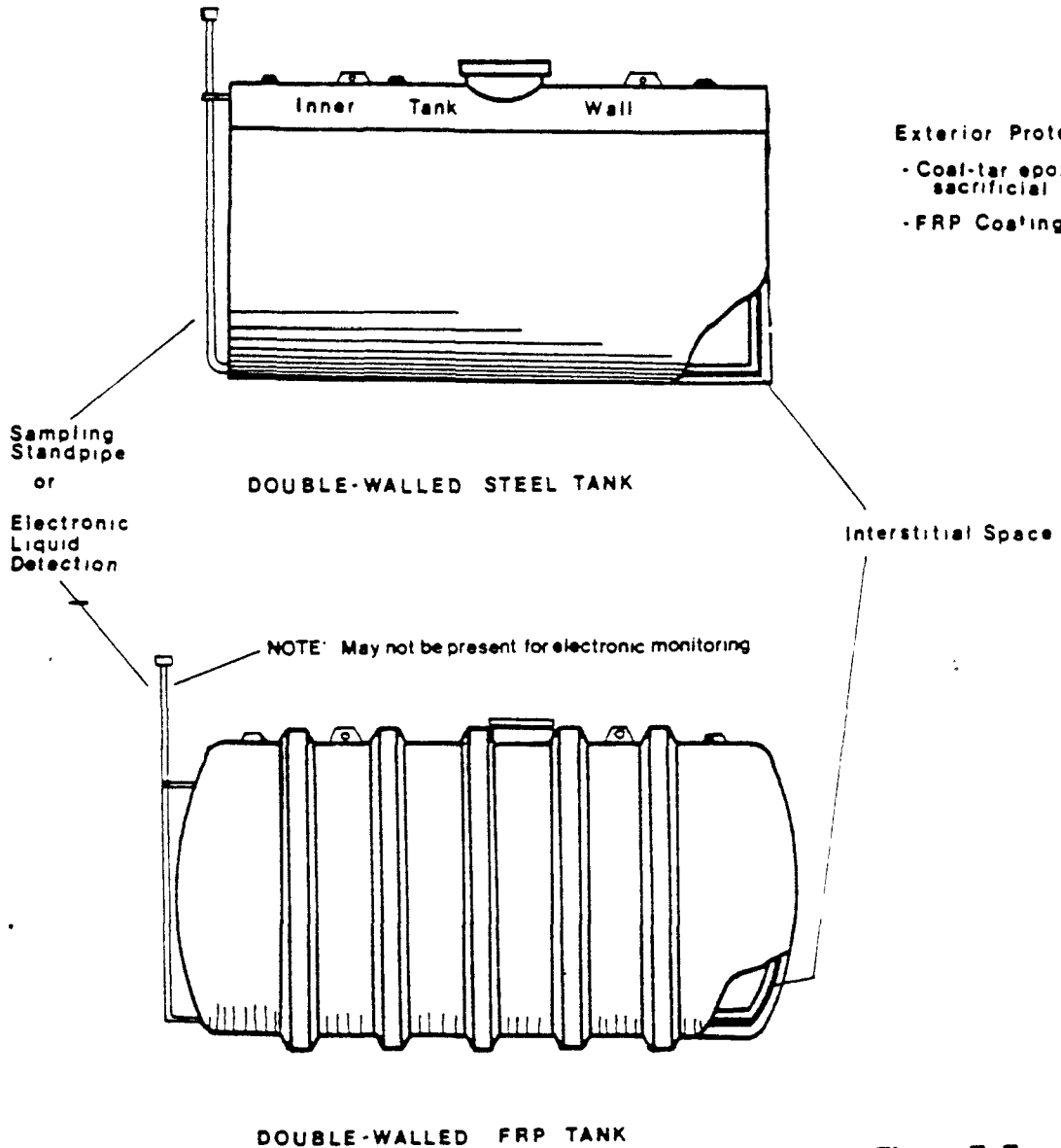

Figure 7-7
Two Double-Walled Tank Configurations

FIGURES ARE FOR ILLUSTRATIVE PURPOSES ONLY. THEY ARE NOT INTENDED FOR USE AS CONSTRUCTION DRAWINGS.

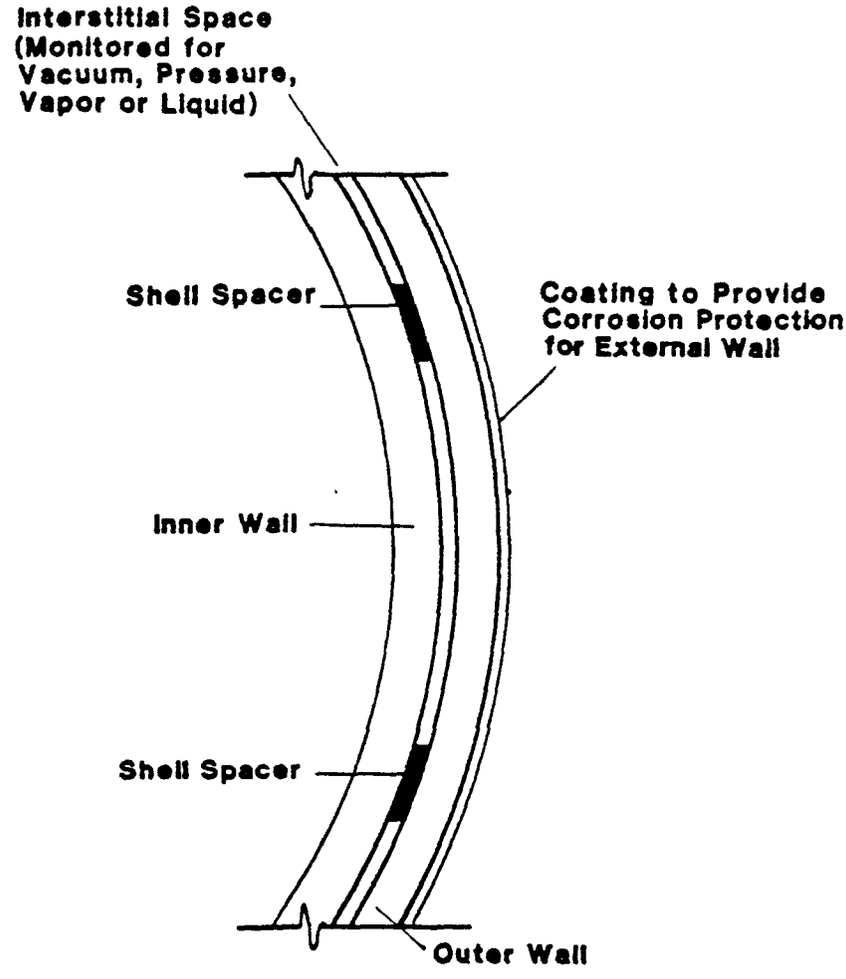

Figure 7-8

Cross Section: Double-Walled Tank

FIGURES ARE FOR ILLUSTRATIVE PURPOSES ONLY. THEY ARE NOT INTENDED FOR USE AS CONSTRUCTION DRAWINGS.

(iv) Designed and installed to surround the tank completely and to cover all surrounding earth likely to come into contact with the waste if released from the tank(s) (i.e., capable of preventing lateral as well as vertical migration of the waste).

Guidance

Liners external to tank systems may be used to contain aboveground, onground, inground, and underground tanks. A liner must provide a complete "envelope," preventing both lateral and vertical migration of released material. Diking and curbing around an aboveground tank should be used in conjunction with a liner to contain any released material (see Figure 7-5). Typical earthen dike construction is illustrated in Figure 7-9. A tank system can prevent run-on and infiltration from entering a secondary containment area by having diversion dikes or ditches, curbs on paved areas, or interceptor ditches on open land to divert run-on away from the system. An impermeable cover (which slopes away from the tank) over an underground secondary containment system will also reduce run-on and infiltration into the containment area. As an additional precaution, the liner's upper edges should be folded towards the tank (liner turnback, see Figure 7-4). A double-walled tank, if structurally secure, is sufficient to prevent run-on and infiltration of precipitation into its secondary containment area. Care must be taken to ensure that a leakproof connection is made between tank and piping containment systems (see Figure 7-10). Concrete may also be used as effective diking and curbing material.

The material that is usually the most effective for the construction of a secondary containment excavation liner is a synthetic, flexible membrane. Other materials, such as clay, bentonites, soil cement, and asphalt can be used, if they meet the impermeability and durability performance standards for an excavation liner (i.e., for the life of a tank). Generally clay, under good environmental conditions, and synthetic membranes are likely to have the longest reliable service lives.

The selection of an appropriate liner material depends on geologic site characteristics, stored waste characteristics, and climate. The durability of

Figure 7-9
Typical Earthen Dike Construction

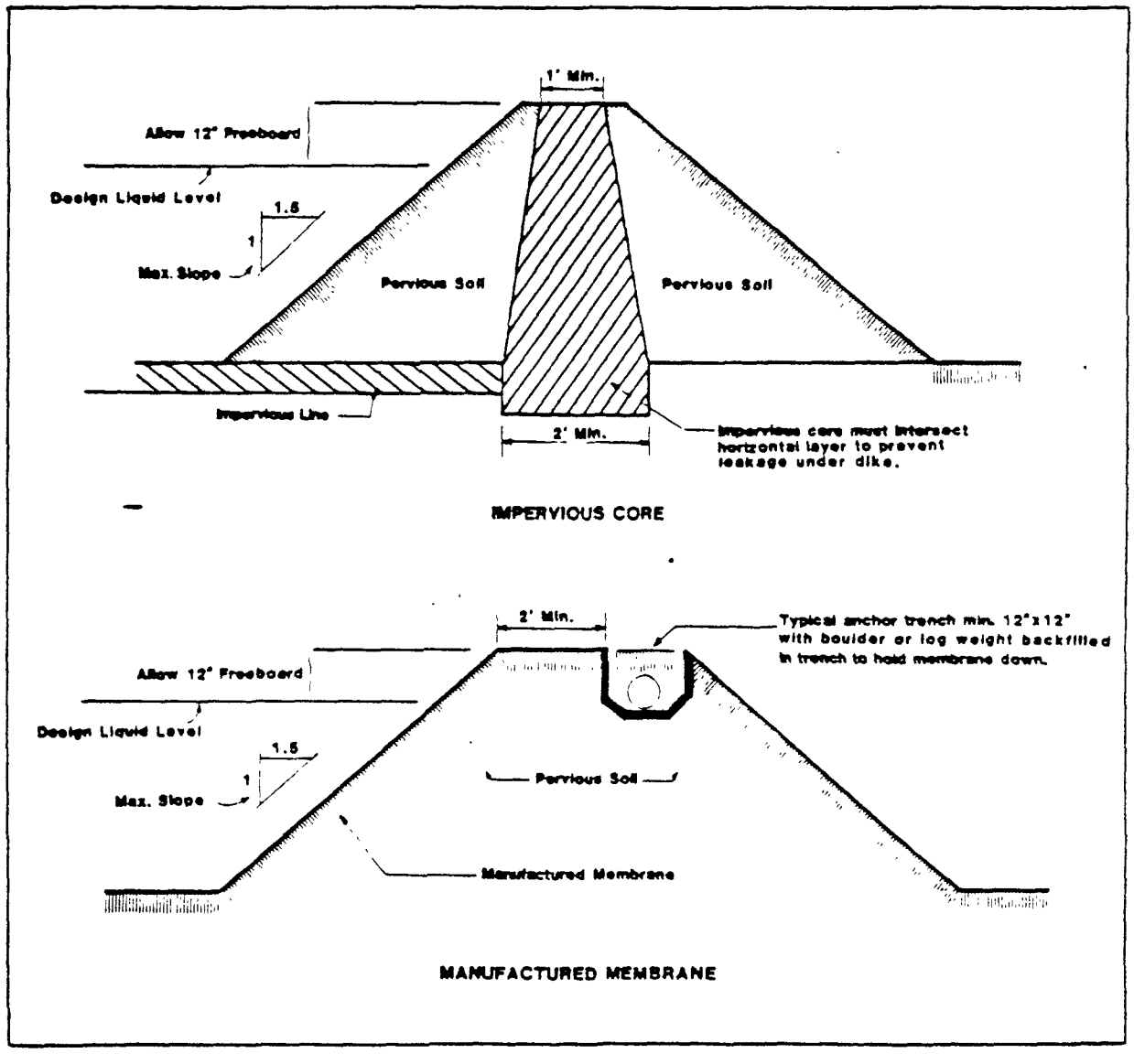

FIGURES ARE FOR ILLUSTRATIVE PURPOSES ONLY. THEY ARE NOT INTENDED FOR USE AS CONSTRUCTION DRAWINGS.

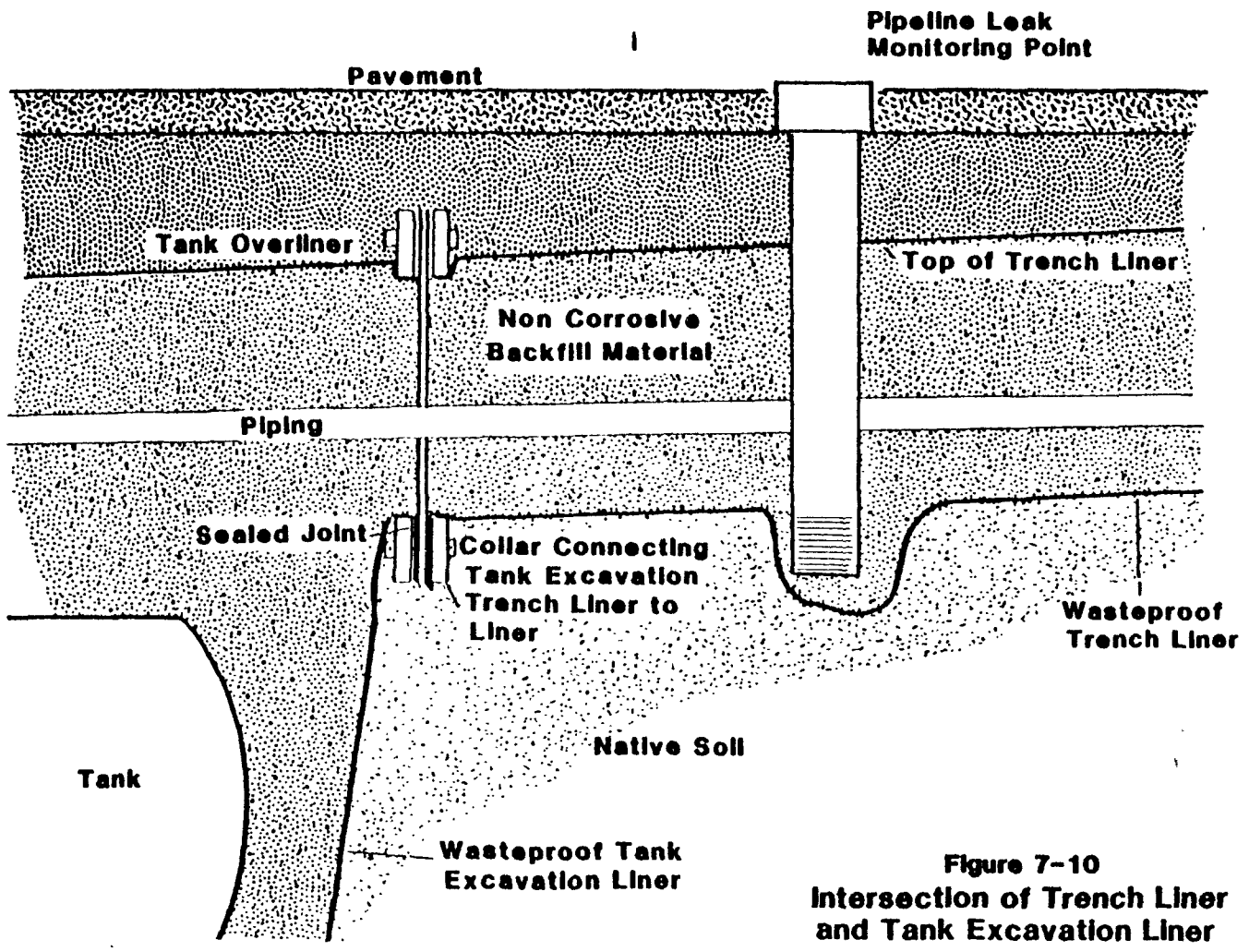

Figure 7-10
Intersection of Trench Liner and Tank Excavation Liner

FIGURES ARE FOR ILLUSTRATIVE PURPOSES ONLY. THEY ARE NOT INTENDED FOR USE AS CONSTRUCTION DRAWINGS.

a liner, particularly a synthetic, flexible-membrane liner, depends principally on proper installation (designed and installed to prevent punctures from rocks, debris, etc.) and waste compatibility. Any liner material selected must be able to prevent releases for the lifetime of the tank it is enclosing.

The different liner materials may be used together for added protection against releases to the environment. For example, soil cement can serve as a base for a synthetic membrane liner.

Sec. 193(c)(4) requires that the containment system be sloped or designed to contain spills; therefore, any liner should have a minimum slope of 1/4 inch per linear foot to a dry well or a collection sump to allow liquids to drain for detection and removal. Liner materials are described below. (For additional information, refer to "Lining of Waste Impoundment and Disposal Facilities," NTIS Document PB81-166365, 1980; and "Recommended Practices for Underground Storage of Petroleum," New York State Department of Environmental Conservation, May 1984.)

A) Concrete

Concrete that is used for lining hazardous waste tanks is usually composed of Portland cement, coarse aggregate, fine aggregate, water, and steel reinforcing. In addition to adjusting the mix design, numerous additives can be used to impart specific properties to the concrete. The advantages to using concrete as a hazardous waste tank liner include its durability, structural integrity, and layout flexibility; it can also be formed into a wide variety of shapes. Even though the constructed cost of concrete is higher than some other types of liners, the durability of concrete and the ease of integrating structural support with concrete liners often makes concrete the least costly alternative overall.

Concrete liners must be carefully designed and constructed, however, to ensure that they do not deteriorate and leak. One critical consideration

with the use of concrete liners is installation. Concrete construction drawings can be difficult to follow, moreover, after the concrete has set, it is often difficult to determine if the plan and specifications were followed. Therefore, each phase of the construction must be carefully supervised to ensure that the completed liner will perform properly. The American Concrete Institute provides guidance on the concrete construction practices in Specifications for Structural Concrete for Building, Publication 301 (1984).

Generally, two types of concrete can be used for liners. Traditional mass-poured concrete can be used if sufficient reinforcing steel is used, as described below, to control cracking. Also, the surface can be sealed with a flexible coating. These coatings are discussed in detail in Section 7.6, Vault Requirements. The second type of concrete that can be used for liners is pre-stressed or post-tensioned concrete. In this type of concrete, the steel reinforcing is in tension, forcing the concrete into compression. This reduces the possibility of cracks developing in the concrete. In pre-stressing, the concrete is poured over taut reinforcing steel. When the concrete hardens, the steel is released, compressing the concrete. In post-tensioned concrete, the steel reinforcing is placed in tubes in the concrete. When the concrete hardens, the steel is pulled taut and attached to the ends of the member. Design and construction guidance for these types of concrete are given in the following documents:

- American Concrete Institute (ACI) Publication 318, "Building Code Requirements for Reinforced Concrete" (1983);
- ACI Publication 350, "Concrete Sanitary Engineering Structures" (1983);
- Post-tensioning Institute, "Design and Construction of Post-tensioned Slabs-on-Ground" (1986); and
- Prestressed Concrete Institute, "Guide Specification for Prestress Precast Concrete for Buildings" (1985).

The choice of which type of concrete to use depends on many factors. Traditional mass-poured concrete is more amenable to complex layouts with specific structural requirements than pre-stressed or post-tensioned concrete. Prestressed concrete is usually fabricated in a factory and transported to the site. Usually used for simple shapes, it is most economical when mass produced. Post-tentioned concrete is often used for large liners with relatively simple layouts.

Section 264.193(e)(1)(iii) states that the liner must be free of cracks or gaps. Cracks and gaps can be minimized by following accepted design and installation practices. Cracks can develop in concrete for several reasons. Cracks can occur because concrete shrinks while it cures. This shrinkage can be minimized by careful attention to the water content of the mix and by using shrinkage control additives. The size of the shrinkage cracks can be minimized by using additional steel beyond that which is normally required for strength. The steel reinforcing should be distributed with many small bars rather than a few large bars. Joints in the concrete that allow movement can also be used to minimize cracking. The use of shrinkage joints should be minimized, however, because the joint seals are more susceptible to failure than the concrete itself. Additional steel reinforcing is generally preferred to additional joints.

Cracking of concrete can also result from thermally induced expansion and contraction. A change in ambient temperature or bright sunlight can cause the concrete to expand or contract. When the concrete is constrained by foundations or the temperature shift is not uniform over the structure, stresses and cracks in the concrete can develop. The occurrence of these cracks can also be minimized by using additional steel reinforcing and expansion joints, with additional reinforcing the preferred method.

A third cause of cracking is frost penetration. Frost penetration can be minimized by careful attention to the finishing of the concrete during placement. The surface should be smooth to promote drainage and to prevent water from standing. Care should be taken not to overwork the concrete during placement, however, because overworking can cause the

coarse aggregate to sink, thus reducing the durability of the surface. Air entrainment additives also reduce the possibility of frost damage.

A fourth source of cracks in concrete is differential settlement. Concrete is not very flexible, and if the ground or foundation settles unevenly, cracks can develop in the concrete or the joint seals can become separated or damaged. A number of ways can accommodate or minimize differential settlement; the choice of method will depend upon the soil conditions and structural support requirements of the liner. One way to minimize differential settlement is to reduce total settlement, which can be accomplished by compacting the underlying soil or increasing the size of the supporting foundation. The joint seals should be designed to accommodate the expected differential settlement.

A potential source of gaps in a concrete liner is in the joints between foundation supports and the liner. In general, interruptions of the liner should be eliminated wherever possible to limit the number of gaps or joints that require seals. Typically, tanks, pumps, and pipe racks require foundations. One way to eliminate a gap in the liner at these foundations is to pour the liner over the foundation, leaving only a horizontal joint between the liner and the foundation. The tank or other equipment can then be placed on top of the liner; however, drainage must be provided under the tank to permit the detection and collection of any release. The design of concrete joints and seals is described in more detail in Section 7.6, Vault Requirements.

Another design consideration for concrete liners is the compatibility of the liner and the waste. General compatability requirements are described in Section 7.3, Design Parameters. Additional concerns exist with concrete, however, because of the numerous types of aggregates, additives, and coatings used. If a coating is used, then the coating must be compatible with the stored waste. If no coating is used, then the constituents of the concrete must be compatible with the waste. This may require a detailed mix design specification. In addition, the seals used in the joints must be compatible with the waste.

B) Synthetic Flexible Membranes

Synthetic flexible membrane liners (FML) are composed of polymeric materials in sheet form. These materials include a wide variety of polymers, such as polyvinyl chloride (PVC), polyethylene, polyester, butyl rubber, epichlorohydrin, and neoprene. The appropriate liner material should be selected on the basis of its compatibility with stored wastes, durability, permeability, and resistance to damage during installation. Synthetic membranes generally have a high resistance to bacterial deterioration and chemical attack; however, the membrane sometimes will fail under heavy loading.

Sections 264.192(b) and (c) require that new tank systems be installed in a manner that prevents damage to the system; therefore, efforts should be made during and after liner installation to protect the material from punctures and tears. Rocks, rubble, and debris must be removed prior to and during base and wall compaction, in preparation for liner installation. Protective layers above and below a synthetic membrane will protect it from punctures and promote drainage.

Synthetic membranes are often prone to cracking at low temperatures and to stretching and distortion at very high temperatures. Liner seams and joints must be properly sealed to prevent the release of waste, and sealants must be compatible with the waste in the tank. Furthermore, synthetic membranes need to be protected from sunlight and ozone by a covering, a particularly important consideration for an aboveground membrane. A qualified installation contractor should supervise the synthetic membrane liner installation process to ensure that all necessary quality control measures are implemented.

Two references, the National Sanitation Foundation's (Ann Arbor, MI) Standard 54, "Flexible Membrane Liners" (1983) and the EPA's Municipal Environmental Research Laboratory "Expected Life of Synthetic Liners and Caps" (1983), provide information on and comparisons of the various types of synthetic flexible membranes. The issue of service life is discussed in both publications. The EPA report states:

> Selection of the most appropriate liner for a given waste/environment situation, specifically one that will provide the longest service lifetime, is a difficult task. Available data on liner specifications and properties (both on virgin and exposed samples) do not provide a clear basis for choice though they can eliminate some materials for a given site or design.... The best approach to maximum serviceability and durability, economics aside, seems to be to select the thickest and strongest FML of a polymer type consistent with desired chemical resistance and other site-specific requirements.

The EPA's recommended Method 9090, describes a compatibility test for wastes and membrane liners. See Appendix G of this document for the descripton of this test.

C) Clay

Because of its general availability in many areas and its low cost, clay is often considered for a secondary containment liner. If the material has a permeability rate of approximately 10^{-7} cm/sec or lower and is installed properly, such a liner generally will provide a suitable barrier against leakage from a tank.

Clay varies in composition and permeability and is subject to drying, cracking, and destabilization when exposed to some organic solvents. If a clay liner is not kept moist, usually by a soil cover, shrinkage cracks may form. Clay also may be permeable to some materials, particularly after exposure to water. Furthermore, installation of clay liners can be extremely complex, depending upon the characteristics of a site and of the clay. The selection of a clay material for a particular liner application should be based on tests for suitability, performed by a soils engineer or a soils chemist.

To be adequately designed to prevent releases, an excavation must be free of water, and a clay liner must be sufficiently thick and plastic (pliable), well-compacted, and installed at the proper moisture content. Clay liners normally are not suitable for use in high ground-water areas. A regular cycle of very wet and dry seasons may also make a clay liner ineffective.

D) Bentonites

Bentonites are naturally occurring, inorganic swelling clays that are usually chemically treated. Mixtures of soils and chemically treated bentonites may be used to line excavations for underground tanks. Bentonites have features similar to natural clay, but bentonites swell when wet to produce self-sealing properties. Bentonites may be subject to destabilization when placed in contact with organic solvents.

The following installation considerations can help prevent the formation of cracks and gaps in a bentonite layer:

- An excavation must be drained, stabilized, and not located in an area of high ground water.
- A bentonite mixture must be saturated with water and compacted with a steel rolling wheel.
- Water used to wet soil during installation must not have a high concentration of dissolved salts.
- Bentonite layer installation must be performed during dry weather.
- Soil chemists or soil engineers should be present during construction to ensure that the correct water, soil, and clay mixtures and the correct saturation schedules are used.
- Only a qualified installation contractor should be used to construct a bentonite containment system.

E) Soil Cement

Soil cement is a compacted mixture of Portland cement, water, and selected in-place soils. The result is a low-compressive-strength concrete with greater stability than native soils. A soil cement liner generally will

have medium- to low-permeability, depending on the soil used. Since permeabilities vary, a smooth soil mixture is preferred, since it produces a more impermeable structure. Excessive cement in the mixture, however, can lead to shrinkage cracks.

As a rule, soil cement is more permeable than bentonites, clays, or synthetic membranes. Soil cement is durable and resists aging and weathering, but it degrades rapidly with high-frost penetration. In an area with high ground water, soil cement is an inadequate tank excavation liner. For these reasons, said cement should not be used in locations where high water tables or frost may be present.

To prevent the formation of cracks and gaps, soil cement should be appropriately moistened to prevent the liner from drying too quickly. A soil cement liner must be stiff enough to avoid slippage on excavation walls but plastic enough to consolidate properly. Lastly, soil cement must be cured properly for maximum structural integrity.

F) Asphalt

Asphalt, similar to road-paving material, has good strength, durability, and is relatively impermeable when properly sealed. Certain organics will dissolve asphalt, however, so compatibility of a stored waste and the asphalt must be definitively determined prior to liner installation. Typically, asphalt is sprayed on a foundation or base as a sealant. Asphalt emulsions are also used.

7.6 VAULT REQUIREMENTS

A vault, generally constructed of concrete, is typically an underground chamber with a roof that will contain any released tank contents. There may be one or more tanks contained within a vault. An underground vault may or may not be backfilled. An unfilled vault allows inspectors to examine any contained tank(s).

Citation

A vault system is subject to the following Sec. 264.193(e)(2) requirements and must be:

(i) Designed or operated to contain 100 percent of the capacity of the largest tank within its boundary;
(ii) Designed or operated to prevent run-on or infiltration of precipitation into the secondary containment system unless the collection system has sufficient excess capacity to contain run-on or infiltration. Such additional capacity must be sufficient to contain precipitation from a 25-year, 24-hour (rainfall event);
(iii) Constructed with chemical-resistant water stops in place at all joints (if any);
(iv) Provided with an impermeable interior coating or lining that is compatible with the stored waste and that will prevent migration of waste into the concrete;
(v) Provided with a means to protect against the formation and ignition of explosive vapors with the vault systems, if used for storing or treating ignitable or reactive wastes; and
(vi) Provided with an exterior moisture barrier or be otherwise designed or operated to prevent migration of moisture into the vault if the vault is subject to hydraulic pressure.

Guidance

A vault typically consists of concrete walls and a concrete bottom slab within which a tank is placed and usually includes a cover. When the concrete is coated with an impermeable material, the vault will be able to contain leaks from the tank and provide protection from potentially corrosive soil.

Generally, vaults are most effective when the tank(s) within them are supported on cradles or saddles. This design allows the tank(s) to be thoroughly inspected and repaired on all sides from within the vault. (Figure 7-6 shows two tanks on cradles in a vault.) The longer a tank is, the more cradles or saddles are needed. Cradles or saddles should support at least 120° of a tank's circumference. Contact ideally should consist of a metal-reinforcing wear plate, hermetically sealed to a tank, and a metal saddle, both resting on a concrete pier. Alternatively, although it is a less desirable design, a metal plate may be sealed to the tank, resting directly on the concrete saddle. Under no circumstances should the wear plate consist of

decomposable material, such as tar-saturated felt paper, because this moist surface can encourage corrosion.

In addition to ease of inspection and repair, early warning and material recovery are facilitated in a vault without backfill. Some vaults are filled with appropriate bedding and backfill material (e.g., sand) to provide structural support for the contained tank(s) and to protect against ignition of ignitable materials. When a tank is storing ignitable hazardous material, local fire codes may require the interior vault space to be filled with an inert backfill material. The final rule eliminates the backfilling requirement for vault systems as the only means to protect against fire hazards, but continues to allow backfilling as an acceptable method. There are relatively inexpensive and reliable equipment and instrumentation systems to reduce the risks of explosion. These systems include preventative measures such as equipment grounding and the use of electrical equipment meeting explosion-proof service. In addition, suppression systems can also be installed which use an explosive vapor detector, and provide an inert flooding agent such as a fluorochlorohydrocarbon to flood the vault automatically if explosive conditions exist.

Figure 7-11 shows a schematic, cross-sectional view of waterproofing at a vault's base corner, detailing the water stop required in Sec. 264.193(e)(2)(iii). Water stops must be chemically compatible with the waste(s) in a vault. A vault should contain no top connections other than entry manholes and other top openings for piping, vents, monitoring devices, etc. All vault openings require waterproof seals. The floor of a vault should be constructed with a slope (typically greater than or equal to 1/8 inch vertical per foot horizontal) that channels any leaked or spilled waste to a collection area.

Concrete is one of the most common construction materials for a vault. Because concrete is porous and some cracking is likely, the interior of a vault must be lined with an impermeable barrier to prevent releases to the environment. To minimize cracking, the barrier's thermal expansion coefficient should be similar to that of concrete (in areas of temperature

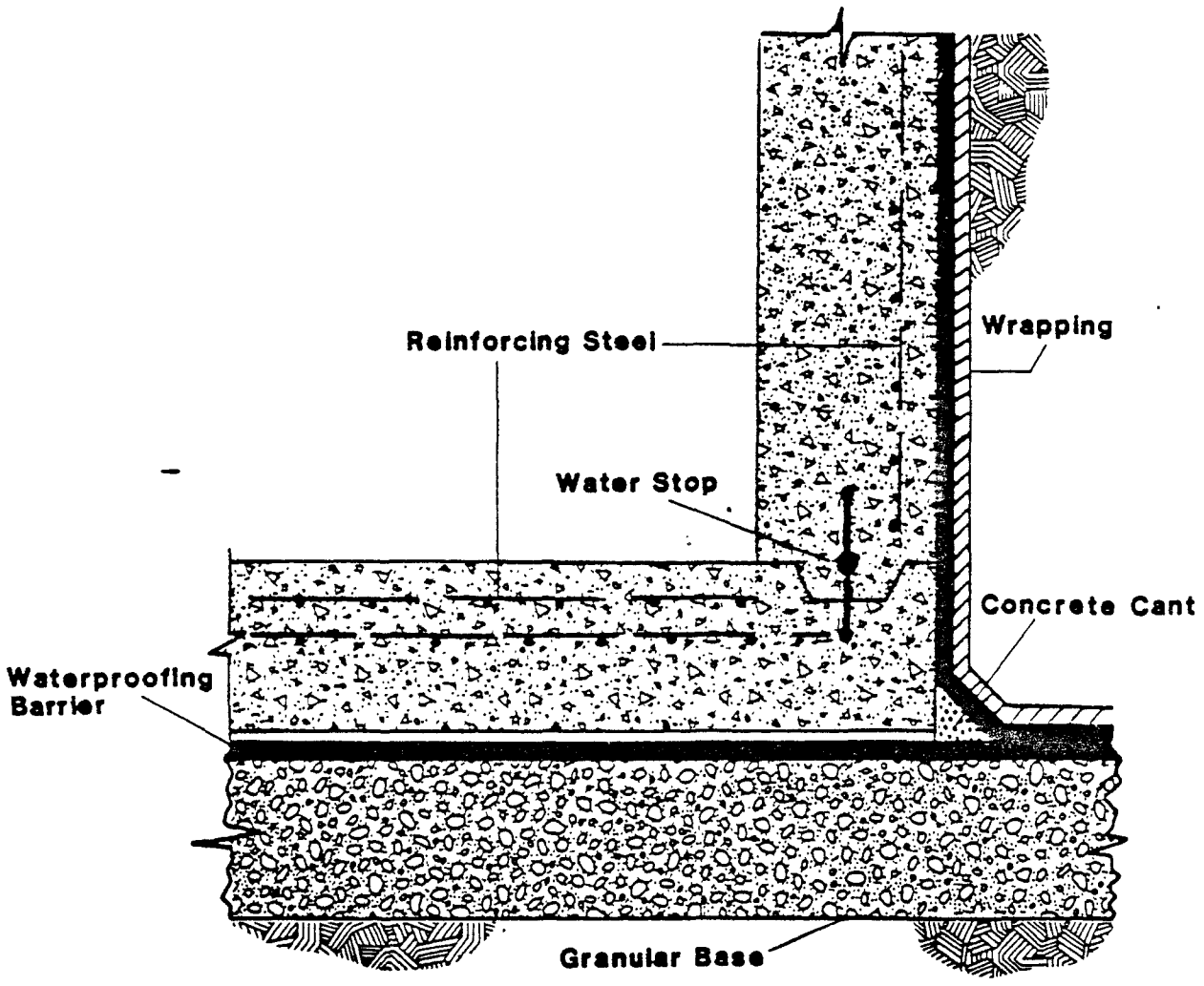

Figure 7-11
Waterproofing at Corner of Vault Base

FIGURES ARE FOR ILLUSTRATIVE PURPOSES ONLY. THEY ARE NOT INTENDED FOR USE AS CONSTRUCTION DRAWINGS.

extremes), and the barrier should have a low modulus of elasticity to prevent barrier stresses from being greater than the tensile strength of the concrete, over the temperature range expected during use. Cracks in concrete may occur during curing shrinkage of two-component polymeric materials.

Selection of an impermeable barrier material for a concrete vault requires compatibility of the material with the stored waste and impermeability to the waste. These characteristics may be temperature-dependent. Table 7-3 summarizes general characteristics of barrier systems. The permit applicant must be able to demonstrate the chemical compatibility and impermeability of a concrete vault's barrier material.

Waterproofing the exterior of a concrete vault requires a continuous membrane that completely encloses the vault. Waterproofing barriers include hot- and cold-applied materials, such as bituminous-saturated felt or fabric, glass fabrics, and sheet elastomers. The thickness or number of plies varies with the site-specific water table conditions in the environment surrounding a tank. Waterproofing membranes that are bonded to a tank are preferable over unbonded materials. Vaults are generally unsuitable in areas of high ground water because eventually the vault will deteriorate and fill with water. The American Concrete Institute's (ACI) "A Guide to the Use of Waterproofing, Damp-proofing, Protective and Decorative Barrier Systems for Concrete" (Publication 515.1R-79, 1984) provides extensive guidance and references on tank coatings, liners, and waterproofing materials and methods of application.

Constructing a vault from concrete with reinforcing steel provides additional structural integrity and helps to prevent cracking. Reinforcing bars (rebars) should be coated to prevent corrosion.

A tank contained within a building may be considered to be within a vault. The building, aboveground or inground (e.g., with a basement structure), must meet all of the requirements of Sec. 264.193(e)(2) concerning design capacity run-on and infiltration, water stops, interior lining, moisture barrier, and ignitable/explosive vapors.

TABLE 7-3

GENERAL CHARACTERISTICS OF IMPERMEABLE BARRIERS FOR CONCRETE VAULTS

Severity Of Chemical Environment	Total Nominal Thickness Range	Typical Protective Barrier Systems	Typical Uses
Mild	Under 40 mil (1 mm)	Polyvinyl butyral, polyurethane, epoxy, acrylic, chlorinated rubber, styrene-acrylic copolymer. Asphalt, coal tar, chlorinated rubber, epoxy, polyurethane, vinyl, neoprene, coal tar epoxy, coal tar urethane.	o Protection against deicing salts. o Improve freeze-thaw resistance. o Prevent staining of concrete. o Use for high-purity water service. o Protect concrete in contact with chemical solutions having a pH as low as 4, depending on the chemical.
Intermediate	125 to 375 mil (3 to 9 mm)	Sand-filled epoxy, sand-filled polyester, sand filled polyurethane, bituminous materials.	o Protect concrete from abrasion and intermittent exposure to dilute acids in chemical, dairy, and food processing plants.
Severe	20 to 250 mil (1/2 to 6 mm)	Glass-reinforced epoxy, glass-reinforced polyester, precured neoprene sheet, plasticized PVC sheet.	o Protect concrete tanks and floors during continuous or intermittent immersion, exposure to water, dilute acids, strong alkalies, and salt solutions.

Source: American Concrete Institute, "A Guide to the Use of Waterproofing, Dampproofing, Protective and Decorative Barrier Systems for Concrete," 515.1R-79, (1984), p. 29.

Note.--Reprinted with permission from ACI.

Continued on next page

TABLE 7-3 Continued

Severity Of Chemical Environment	Total Nominal Thickness Range	Typical Protective Barrier Systems	Typical Uses
Severe	20 to 280 mil	Composite systems:	o Protect concrete tanks during continuous or intermittent immersion, exposure to water, dilute acids, strong alkalies, and salt solutions.
		a) Sand-filled epoxy system topcoated with a pigminted but unfilled epoxy; and	
		b) Asphalt membrane* covered with acid-proof brick using a chemical resistant mortar.	o Protect concrete from concentrated acids or acid/solvent combinations.

* Other membranes may be used depending on chemical environment.

7.7 DOUBLE-WALLED TANK REQUIREMENTS

Citation

According to Sec. 264.193(e)(3), double-walled tanks must be:

(i) Designed as an integral structure (i.e., an inner tank completely enveloped within an outer shell) so that any release from the inner tank is contained by the outer shell;
(ii) Protected, if constructed of metal, from both corrosion of the primary tank interior and of the external surface of the outer shell; and
(iii) Provided with a built-in continuous leak detection system.....

Guidance

A double-walled tank is essentially a tank within a tank (jacket), with a vacuum, pressurized, or liquid-filled space between the inner and outer walls.

Guidelines for the aspects of design of underground, steel, double-walled tanks may be found in the Steel Tank Institute (STI) publication "Standard for Dual Wall Underground Steel Storage Tanks." Additionally, Underwriters Laboratories, Inc. (Northbrook, IL) will, for a fee, analyze the structural adequacy of a double-walled tank design, taking into consideration loading, unusual stresses, etc.

Double-walled tanks generally are made of one of the following materials: 1) metal, 2) epoxy (with or without a stone aggregate between the walls), or 3) metal with a synthetic "wrap" around the external surface (see Figure 7-12). A double-walled metal tank must be protected from external corrosion just as a single-walled metal tank is protected, with a coating, cathodic protection, etc. Epoxies and vinyl esters are commonly sprayed on or applied to a metal tank surface. Double-walled, fiberglass tanks are becoming increasingly common because of their corrosion-resistant properties. (See NFPA 30 for details on protection of the exterior of double-walled tanks from external corrosion.) Internal corrosion can be prevented in double-walled tanks by ensuring compatibility with the hazardous waste stored or treated.

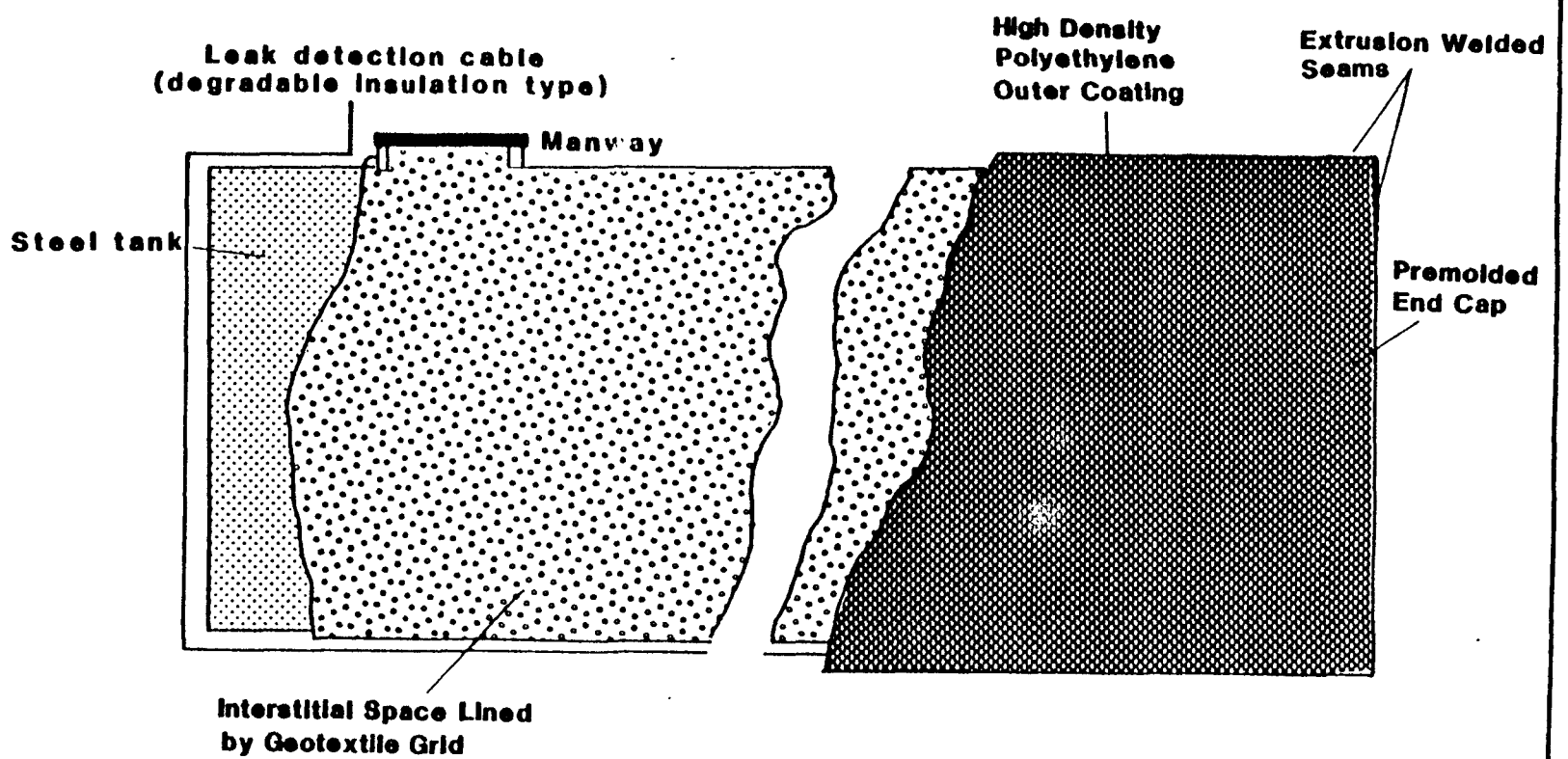

Figure 7-12
Tank Wrapped in Flexible Membrane

FIGURES ARE FOR ILLUSTRATIVE PURPOSES ONLY. THEY ARE NOT INTENDED FOR USE AS CONSTRUCTION DRAWINGS

Leak-detection within the interstitial space of a double-walled tank is generally based on inspection of an observation well but may also be based on loss of vacuum, pressure, or liquid, depending on the design. Liquid probes may also be used to detect waste releases or ingress of ground water. (See Section 7.3(C) in this document for more information on interstitial leak-detection devices.)

Double-walled tanks greatly reduce the likelihood of releases to the surrounding environment. In addition to the installation requirement of Sec. 264.192, manufacturers' installation instructions should be followed explicitly to ensure tank integrity.

7.8 ANCILLARY EQUIPMENT WITH SECONDARY CONTAINMENT

Citation

Ancillary equipment must be provided with secondary containment (e.g., trench, jacketing, double-walled piping), with the following exceptions, as specified in Sec. 264.193(f):

- Aboveground piping (exclusive of flanges, joints, valves and other connections) that are visually inspected for leaks on a daily basis;
- Welded flanges, welded joints, and welded connections, that are visually inspected for leaks on a daily basis;
- Sealless or magnetic coupling pumps, that are visually inspected for leaks on a daily basis; and
- Pressurized aboveground piping systems with automatic shutoff devices (e.g., excess flow-check valves, flow metering shutdown devices, loss of pressure-actuated shut-off devices) that are visually inspected for leaks on a daily basis.

Guidance

Section 264.193(f) states that all ancillary equipment, except that noted above, associated with a tank must meet the secondary containment provisions of Secs. 264.193(b and c). Thus, as per Sec. 264.193(b), the ancillary equipment associated with a specific tank must be provided with secondary containment that:

- prevents releases to soil, ground water, and surface water;

- detects and collects releases and accumulated liquids until the collected material is removed.

Section 264.193(c) requires a secondary containment system to have the following characteristics:

- compatibility and strength;
- foundation integrity;
- leak-detection capability;
- adequate drainage;
- adequate capacity; and
- excess capacity to accommodate run-on and infiltration.

The potential for leakage from straight runs of aboveground welded piping, sealless pumps and valves, and pressurized aboveground piping (equipped with automatic shut-off) is substantially lower than for certain other components of ancillary equipment. Therefore, as cited, the secondary containment requirement is waived for aboveground piping (exclusive of flanges, joints and valves unless they are sealless and welded to the piping), sealless or magnetic pumps and pressurized aboveground piping systems with automatic shut-off devices that can be visually inspected for leaks on a daily basis. For all other ancillary equipment, full secondary containment or a demonstration of no migration or no hazard is required in accordance with Sec. 264.193(g).

Containment for pumps and valves often can be provided most efficiently if it is integrated with a tank's secondary containment system. This is not always feasible, however, so a separate secondary containment system specifically designed for ancillary equipment may have to be provided. For equipment like pumps and valves (see Figure 7-13), a liner and a sump or similar devices may be used to collect leaks. A sump and its attached troughs if constructed of concrete, must have an interior coating or liner that is compatible with the stored waste.

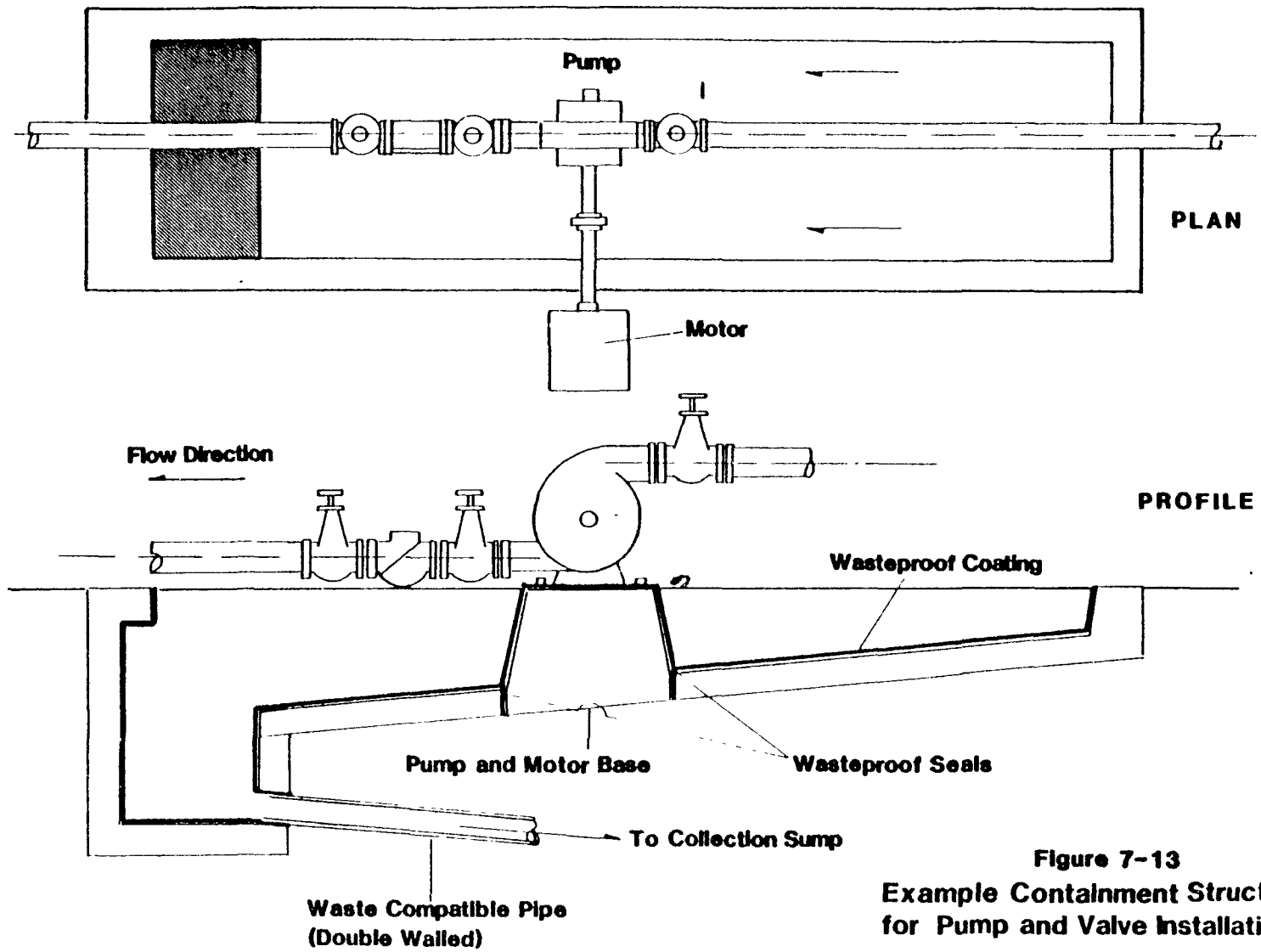

Figure 7-13
Example Containment Structure for Pump and Valve Installation

FIGURES ARE FOR ILLUSTRATIVE PURPOSES ONLY THEY ARE NOT INTENDED FOR USE AS CONSTRUCTION DRAWINGS

Leak-detection for an ancillary equipment secondary containment system may be provided either by integrating the mechanism used for a tank with that for the ancillary equipment or by installing separate sensors. Leak-detection sensors (see document Section 7.3(C)(2)) along the lengths of piping enable an owner or operator to detect even relatively small leaks or the entry of water anywhere within a piping system.

To remove the released waste or ingressed water from the secondary containment system of the ancillary equipment, waste transfer must first be stopped. The containment system then can be emptied, if necessary, to prevent exposure to workers, the public, or to the environment. The point of leakage must then be repaired before waste transfer starts again, as required in Sec. 264.196(e)(3).

In the following subsections, four types of secondary containment systems for piping are described, and their respective abilities to comply with the requirements are discussed. The four types of systems are lined trenches, concrete trenches, double-walled piping and jacketing. Lined trenches constructed of synthetic materials are usually the most cost-effective means of secondary containment.

A) Lined Trenches

Piping trenches can be either covered or open-topped. Covered trenches are required for underground piping. Covered trenches have the advantage of avoiding the accumulation of precipitation and thereby facilitating precipitation management. For a pressure-piping system, a trench that is not covered may not be able to provide containment in case of a pipe rupture. At a minimum, a spray shield should be mounted over the top half of a pipeline to prevent pressurized waste from spraying out onto the ground. The regulations require that the secondary containment must cover all surrounding earth likely to come in contact with any released waste.

Liners for a pipe trench should be constructed of a material similar to that used to line a tank excavation. Clays and synthetic membranes can be

used to line a piping trench. The seams of the liner material should be sealed to prevent releases, the material must be compatible with the stored substance, and it must be sufficiently strong to withstand the stresses described in Sec. 264.193(c)(1) and any additional stresses from pressurized flow if the pipeline should rupture. No significant stresses from vehicular traffic should be permitted on piping. Static head and hydrologic forces on the piping trench liner are apt to be less than those on a tank excavation liner because of the trench's generally shallower depth.

As specified in Sec. 264.193(c)(2), trench backfill must be carefully compacted to provide the necessary support for the liner to prevent failure from settlement, compression, or uplift. The piping trench should be sloped appropriately so that liquid accumulates in a location from which it can be withdrawn.

B) Concrete Trenches

Concrete trenches are similar to lined trenches in design principle, but they are much stronger structurally. A greater amount of stress may be placed on the exterior of a concrete trench than on a lined trench, and larger loads may be placed on top of a concrete trench. When clad outside with an impermeable coating, a concrete trench is able to resist the infiltration of ground moisture. The concrete piping trench, must be compatible with stored waste.

Concrete, however, is subject to cracking from frost. Because of the relatively shallow depth of most tank ancillary equipment, cracking may occur during heavy frost. Thus, concrete trenches may allow releases to enter the environment and would be inappropriate in these climatic environments.

C) Double-Walled Piping

Double-walled piping refers to both piping that is factory built with two walls and pipe-within-a-pipe applications assembled on-site. Factory-built piping may allow pressurization of the interstitial space between the two walls, permitting monitoring for leaks using pressure readings (see document Section 7.3(C)).

Double-walled piping is equally applicable aboveground or belowground, but additional corrosion protection measures may be required belowground. This type of piping, although available, has not been extensively used, primarily due to its high cost and it is considered most effective for straignt runs of pipe with no elbows and tees. No precipitation management is required for double-walled piping. Backfill for underground double-walled piping must be placed and compacted as specified in Secs. 264.192(c) and (e). Manufacturers' instructions for proper support should also be adhered to. A cross-section of double-walled piping with two contained pipelines is shown in Figure 7-14.

D) Jacketing

Although aboveground straight piping is exempted from the secondary containment requirements, aboveground ancillary equipment components such as flanges, valves and other connections, are not. Local jacketing can provide cost-effective secondary containment for these aboveground ancillary equipment components (flanges, valves and fittings) and can be provided with leak-detection equipment. This system can only be applied to aboveground piping systems, however.

Local jacketing collects or contains leakage from local components and directs the leaked material to containment sumps where it can be disposed of or pumped back into primary containment areas.

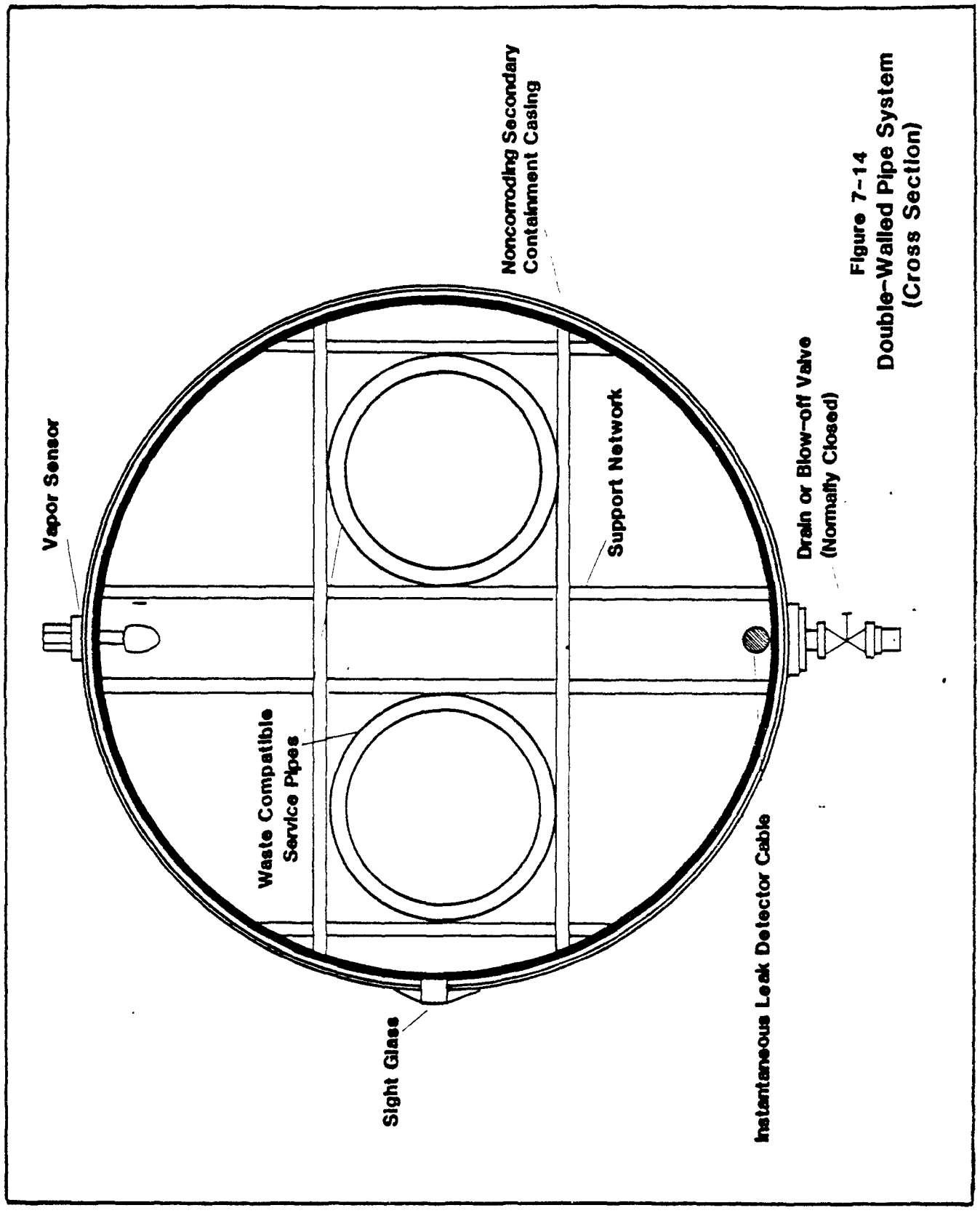

Figure 7-14
Double-Walled Pipe System
(Cross Section)

FIGURES ARE FOR ILLUSTRATIVE PURPOSES ONLY. THEY ARE NOT INTENDED FOR USE AS CONSTRUCTION OR [illegible]

As the jacket is not pressurized, leaks in the local jacketing will induce pressurization. Therefore, with the use and application of a pressure indicator with jacketing will enable even small leak detection during routine inspections. If the leak is large enough, the level in the sumps will trigger the pump and can then be attended to.

If properly engineered, the system is known to be extremely reliable and relatively minimal in cost compared to other reliable systems. The system works for both liquids and slurries and warrants little maintenance.* (See ASME Codes for Pressure Piping, ASME/AWSI, B31, (1984) and NFPA 30, (1984), for additional information.)

7.9 SUMMARY OF MAJOR POINTS

This subsection summarizes the information covered in this section and may be used in assuring the completeness of a Part B permit application. It also can be helpful in planning, preparing, and verifying the adequacy of the secondary containment system.

- Has a secondary containment system for existing tanks and ancillary equipment been placed into operation within the time frames specified in Sec. 264.193(a)?

- Will a secondary containment system for new tanks and ancillary equipment be installed?

- Does the secondary containment system accomplish the following:

---

* Information excerpted from a study conducted for the EPA by Jacobs Engineering, "Feasibility of Requiring Secondary Containment and/or, Other Methods Available, to Contain Potential Releases of Hazardous Waste from Ancillary Equipment, March 1986.

-- Prevention of migration of waste or precipitation from the tank system to the soil, ground water, or surface water at any time during the use of the tank system;

-- Collection and detection of release of waste or precipitation;

-- Permit removal of spilled or leaked waste and/or accumulated precipitation in a timely manner in order to prevent releases from the containment system?

o Does the secondary containment system meet the following design criteria, as a minimum:

-- Constructed or lined with materials that are compatible with the wastes;

-- Have sufficient thickness and strength to prevent failure due to pressure gradients (static head and hydrological forces), physical contact with the waste, climatic conditions, and stresses from daily operations (e.g., vehicular traffic);

-- Placed on a foundation which provides support to the secondary containment system, provides resistance to pressure gradients above and below, and prevents failure due to settlement, compression, or uplift;

-- Have a leak-detection system which will promptly detect the release of the waste or accumulation liquids in the secondary containment system; and

-- Is sloped or otherwise designed and operated to remove liquids resulting from leaks, spills, or precipitation?

- Is the accumulated waste and precipitation, if defined as hazardous under 40 CFR 261, managed as a hazardous waste under RCRA ?

- Do all concrete sumps have interior linings or coatings?

- Does the secondary containment system include one or more of the following:

  -- A liner (external to the tank);

  -- A vault;

  -- A double-walled tank;

  -- An equivalent device as approved by the EPA Regional Administrator?

- For an external liner system, will the liner:

  -- Contain 100 percent of the design capacity of the largest tank within its boundary;

  -- Prevent run-on or infiltration or have the capacity to contain precipitation from a 25-year, 24-hour storm;

  -- Be free of cracks or gaps;

  -- Prevent lateral and vertical migration of the waste?

- For a concrete vault system, will it:

  -- Contain 100 percent of the design capacity of the largest tank within its boundary;

-- Prevent run-on or infiltration or have the excess capacity described above for liners;

-- Be constructed with chemical-resistant water stops at all joints;

-- Prevent migration of the waste through the concrete by means of a compatible interior liner or coating;

-- Prevent migration of moisture into the vault;

-- Protect against the formation of and ignition of explosive vapors through the use of appropriate equipment?

o For a double-walled tank:

-- Is it designed as an integral structure so that the outer shell will contain any release from the inner shell;

-- If a metal tank, is it protected from corrosion of the interior surface of the inner shell and corrosion of the external surface of the outer shell;

-- Does it have a built-in continuous leak-detection system?

o Does any of the tank or ancillary equipment qualify for an exemption from the secondary requirement based on the following:

-- Aboveground piping, (straight runs) that will be subject to daily visual inspection;

-- Welded flanges, welded joints, and welded connections, that are visually inspected for leaks on a daily basis;

-- Sealless or magnetic coupling pumps that are visually inspected for leaks on a daily basis; and

-- Pressurized, aboveground piping systems with automatic- shutoff devices that are visually inspected for leaks on a daily basis?

In addition, see Appendix A, "Completeness Checklist," to verify compliance with the requirements of this section.

8.0 VARIANCES FROM SECONDARY CONTAINMENT

Section 264.193(g)(1)(2) regulations provide details on the information the Regional Administrator needs to grant a variance from the Sec. 264.193(a-f) secondary containment requirements. As with all variances, however, the burden of demonstrating compliance with requirements is placed on the applicant, i.e., the tank system owner or operator. Sec. 264.193(h) lists the procedures that must be followed to request and implement a variance from the secondary containment requirements. The EPA intends to issue additional guidance on the variance provisions in the near future and to update that guidance as necessary.

As indicated in the regulations, there are two different courses by which an owner or operator can obtain a variance from the secondary containment requirements. First, the owner or operator may demonstrate to the Regional Administrator that a particular alternative design and operating practice, together with location characteristics, will prevent migration of any hazardous waste or hazardous constituents into the ground water and surface water as effectively as secondary containment with leak detection throughout the active life of a tank system ("technology-based variance"). A second means of receiving an variance from secondary containment is by demonstrating that the hazardous waste released from a tank system will pose no substantial present or potential hazard to human health or the environment ("risk-based variance"). New underground tank systems are precluded from obtaining a risk-based variance because of a mandate in HSWA Section 3004(o)(4)(A) that new underground tanks be required to utilize a leak detection system.

Rather than stating general requirements, the EPA requires an owner or operator to demonstrate compliance with the tank regulations using location, design, and waste characteristic data particular to the tank system in order to obtain a technical base variance. The variance provision recognizes the fact that certain site-specific and waste-specific characteristics may prevent the movement of hazardous constituents into ground water and surface water. Consistent with other performance standards, this provision serves as a

mechanism by which an owner or operator may identify and describe factors such as waste attenuation, degradation, and migration rates that assure either no migration from the zone of engineering control or no substantial risk from hazardous constituents (hazardous constituents are defined in Appendix VIII of 40 CFR 261). An applicant for a technology- or a risk-based variance is required to submit a report including the information described below with conclusions that provide the permit writer with a basis for evaluating the adequacy of the variance request.

8.1 TECHNOLOGY-BASED VARIANCE

Citation

Sec. 264.193(g). The owner or operator may obtain a variance from the requirements of this section if the Regional Administrator finds, as a result of a demonstration by the owner or operator that alternative design and operating practices, together with location characteristics, will prevent the migration of any hazardous waste or hazardous constituents into the ground water; or surface water at least as effectively as secondary containment during the active life of the tank system or that in the event of a release that does migrate to ground water or surface water, no substantial present or potential hazard will be posed to human health or the environment. New underground tank systems may not, per a demonstration in accordance with paragraph (g)(2) of this section, be exempted from the secondary containment requirements of this section.

(1) In deciding whether to grant a variance based on a demonstration of equivalent protection of ground water and surface water, the Regional Administrator will consider:
   - (i) The nature and quantity of the wastes;
   - (ii) The proposed alternate design and operation;
   - (iii) The hydrogeologic setting of the facility, including the thickness of soils present between the tank system and ground water, and
   - (iv) All other factors that would influence the quality and mobility of the hazardous constituents and the potential for them to migrate to ground water or surface water

.....

(3) The owner or operator of a tank system, for which a variance from secondary containment had been granted in accordance with the requirements of paragraph (g)(1) of this section, at which a release of hazardous waste has occurred from the primary tank system but has not migrated beyond the zone of engineering control (as established in the variance), must:

(i) Comply with the requirements of §264.196, except paragraph (d), and

(ii) Decontaminate or remove contaminated soil to the extent necessary to:

[A] Enable the tank system for which the variance was granted to resume operation with the capability for the detection of releases at least equivalent to the capability it had prior to the release; and

[B] Prevent the migration of hazardous waste or hazardous constituents to ground water or surface water; and

(iii) If contaminated soil cannot be removed or decontaminated in accordance with paragraph (g)(3)(ii) of this section, comply with the requirement of §264.197(b).

(4) The owner or operator of a tank system, for which a variance from secondary containment had been granted in accordance with the requirements of paragraph (g)(1) of this section, at which a release of hazardous waste has occurred from the primary tank system and has migrated beyond the zone of engineering control (as established in the variance), must:

(i) Comply with the requirements of §264.196(a), (b), (c), and (d); and

(ii) Prevent the migration of hazardous waste or hazardous constituents to ground water or surface water, if possible, and decontaminate or remove contaminated soil. If contaminated soil cannot be decontaminated or removed or if ground water has been contaminated, the owner or operator must comply with the requirements of §264.197(b); and

(iii) If repairing, replacing, or reinstalling the tank system, provide secondary containment in accordance with the requirements of paragraphs (a) through (f) of this section or reapply for a variance from secondary containment and meet the requirements for new tank systems in §264.192 if the tank system is replaced. The owner or operator must comply with these requirements even if contaminated soil can be decontaminated or removed and ground water or surface water has not been contaminated.

Guidance

The EPA Regional Administrator will use the criteria listed in Sec. 264.193(g)(1) to evaluate the validity of a technology-based variance to the secondary containment requirements. Essentially, a variance applicant must demonstrate that a tank system's design and operating practices, together with location characteristics, will prevent the migration of hazardous constituents to ground water and surface water at least as effectively as secondary containment with leak detection.

When granting a technology-based variance based on a demonstration of equivalent protection of ground water and surface water, the Regional Administrator will take into consideration: (1) the nature and quantity of waste in a tank system; (2) the proposed alternative design and operation; (3) the hydrogeologic setting of the facility; and (4) any other factors that would influence the quality and mobility of the hazardous constituents and their potential to migrate into ground water and surface water.

At their present stages of technical development, the following leak-detection mechanisms may not be able to qualify for a technology-based variance: inventory monitoring, tank testing, and ground-water monitoring. For other methods of leak detection, e.g. unsaturated zone (vadose zone) monitoring, the uncertainty regarding their reliability, accuracy, etc..... is sufficient to cause EPA to have concerns regarding their acceptability as an equivalent protection. Additional EPA research and in-the-field experience with these methods should clarify these concerns in the future. Because new leak-detection technology is currently being developed, at some future time alternative technology may provide as effective leak detection and containment as secondary containment with leak monitoring, and the new or improved technology may be approved for a technology-based variance.

A tank system owner or operator must demonstrate that an innovative tank system design or leak-detection method, will be as effective as secondary containment with leak-detection monitoring for a particular hazardous waste system. The variance applicant must consider in the demonstration the nature and quantity of the hazardous waste, the proposed alternative design and/or operating conditions, the hydrogeologic setting, and any other relevant factors (e.g., constituent viscosity, depth and permeability of soil). The applicant must also demonstrate the reliability and capability of the release-detection system used.

If a technology-based variance is granted, the Regional Administrator will develop a set of requirements which will ensure that the tank system is designed, maintained, and operated in a manner that prevents the migration of hazardous constituents to ground water and surface water. If hazardous waste

does reach ground water or surface water, the technology-based variance will be revoked. The submission of an unpersuasive technology-based variance application, such as earthen berms substituting for secondary containment, is discouraged by the EPA. The Agency also discourages the submission of technology-based variance applications in those situations where secondary containment is obviously provided. For example, for tank systems located inside buildings, the building floor, if appropriate berms are constructed, would serve as part of the secondary containment system. The Agency also may deny the variance if the application is incomplete.

A) Releases to the Zone of Engineering Control.

The zone of engineering control is defined as the area under the control of a tank system owner or operator that, upon detection of a hazardous waste release, can be readily cleaned up prior to the migration of hazardous constituents to ground water or surface water. The zone of engineering control is an area defined in a permit variance, based upon the site-specific hydrogeologic conditions around the tank system(s). The site-specific definition of the zone of engineering control will affect the granting of variances. For example, if a tank system is located in or in close proximity to ground water or surface water a technology-based variance will most likely not be granted.

As per Sec. 264.193(g)(3), the response to a release from a tank system with a technology-based variance that has not migrated beyond the zone of engineering control (as defined in the permit variance) must comply with the measures of Sec. 264.196, (see Section 11.0 of this document) except for paragraph (d) notifications and reports. All contaminated soil within the zone of engineering control must be either removed or decontaminated to prevent the migration of hazardous waste and hazardous constituents to ground water or surface water and to enable the tank system's release-detection mechanism to be at least as effective as that in place prior to the release and upon which the variance was granted. When all soil contamination problems are remedied, an owner or operator must repair the leaking component and provide it with secondary containment that satisfies the requirements of Sec. 264.193, before returning the tank system to use.

If contaminated soil remains within the zone of engineering control, the owner or operator must close the tank system in accordance with Sec. 264.197(b) and provide post-closure care under Sec. 264.197 (see Section 12.0 of this document). If the owner or operator decides to replace or reinstall the existing tank system, the tank system must be provided with secondary containment, in compliance with Secs. 264.192 and 264.193; otherwise, the owner or operator must reapply for a variance (technology- or risk-based) before placing the tank system into service again. As required by Sec. 264.196(f), upon completion of any extensive repairs to a tank, a certification by an independent, qualified, registered professional engineer must be obtained assuring the tank's capability of handling hazardous waste. This certification must be forwarded to the Regional Administrator within seven days after returning the tank system to use. (See Section 11.0 of this document.)

B) Releases Outside the Zone of Engineering Control.

As per Sec. 264.193(g)(4), the response to a release from a tank system with a technology-based variance that has migrated beyond the zone of engineering control must comply with the measures of Sec. 264.196 (a-d). (see Section 11.0 of this document). When contamination migrates beyond the zone of engineering control, the EPA considers the technology on which the variance was granted to have failed. If all contaminated soil cannot be removed or decontaminated, or if ground water has been contaminated, the owner or operator must close the tank system in accordance with Sec. 264.197(b) and provide post-closure care under Sec. 264.197 (see Section 12.0 of this document). If all soil contamination problems are remedied and there has been no ground water or surface water contamination, the tank system must be repaired, replaced, or reinstalled with full secondary containment and release detection, as per Sec. 264.193(a-f), or the owner or operator must reapply for a variance. Additionally, replacement tanks must meet the installation requirements of Sec. 264.192 (see Section 6.0 of this document).

8.2 RISK-BASED VARIANCE

Citation

264.193(g).

(2) In deciding whether to grant a variance based on a demonstration of no substantial present or potential hazard, the Regional Administrator will consider:

(i) The potential adverse effects on ground water, surface water, and land quality taking into account:

[A] The physical and chemical characteristics of the waste in the tank system, including its potential for migration.

[B] The hydrogeological characteristics of the facility and surrounding land,

[C] The potential for health risks caused by human exposure to waste constituents,

[D] The potential for damage to wildlife, crops, vegetation, and physical structures caused by exposure to waste constituents, and

[E] The persistence and permanence of the potential adverse effects;

(ii) The potential adverse effects of a release on ground-water quality, taking into account:

[A] The quantity and quality of ground water and the direction of ground-water flow,

[B] The proximity and withdrawal rates of ground-water users,

[C] The current and future uses of ground water in the area, and

[D] The existing quality of ground water, including other sources of contamination and their cumulative impact on the ground-water quality;

(iii) The potential adverse effects of a release on surface water quality, taking into account:

[A] The quantity and quality of ground water and the direction of ground-water flow,

[B] The patterns of rainfall in the region,

[C] The proximity of the tank system to surface waters,

[D] The current and future uses of surface waters in the area and any water quality standards established for those surface waters, and

[E] The existing quality of surface water, including other sources of contamination and the cumulative impact on surface-water quality; and

(iv) The potential adverse effects of a release on the land surrounding the tank system, taking into account:

[A] The patterns of rainfall in the region, and

[B] The current and future uses of the surrounding land.

Guidance

The EPA Regional Administrator will use the criteria listed in Sec. 264.193(g)(2) to evaluate the validity of a risk-based variance application. A tank system owner or operator must demonstrate to the EPA that in the event of a release from a hazardous waste tank system, the level of contamination that would result will not pose a substantial present or potential hazard to human health or the environment. Again, new underground tank systems are not eligible for a risk-based variance under Sec. 264.193(g)(2).

When granting a risk-based variance based on a demonstration of no substantial present or potential hazard to human health or the environment, the Regional Administrator will take into consideration potential adverse effects on ground water, surface water and land quality. Specific factors to be examined include: waste toxicity and migration potential, site hydrogeology and land uses, soil characteristics, permanence of potentially adverse effects, ground-water and surface-water quality and usages, current and future land use, and local climate.

A risk-based variance applicant can take one of two approaches to demonstrate that no present or potential hazard to human health or the environment will occur:

1. There is no pathway for exposure to humans for the hazardous constituents (no exposure pathway), or

2. Exposure to ground-water or surface-water contamination does not pose a substantial present or potential hazard to human health or to the environment (no substantial hazard).

Essentially, the EPA is requiring the applicant to perform a risk assessment for current and future hazards to human health or the environment. To perform such an assessment, the applicant must evaluate the exposure pathway, which is composed of three inclusive components: a source of contamination, a contaminant transport medium, and a set of current or

potential future receptors. Since "future use" of ground water must be protected, lack of current receptors does not necessarily mean that a variance will be granted. All of these three components must be present to have a complete exposure pathway (number 1, above). Obviously, if one or more of three components are not present then developing a case for a risk-based variance under number 1 may be feasible. Assessing the seriousness of exposure, [i.e., the concentrations of a constituent, and the hazards such exposure represents for individual chemicals and their combinations] is critical for a successful risk-based variance demonstration under number 2, above.

Using the Sec. 264.193(g)(2) listed criteria, the Regional Administrator will evaluate each application for a risk-based variance. Site-specific information on sources of release, transport media, and receptor characteristics must be supplied to the Regional Administrator so that the impact(s) of a release can be identified. The type and amount of information needed for a risk-based variance demonstration depends on site-specific characteristics and which demonstration approach (no exposure pathway or no substantial hazard, numbers 1 and 2, respectively) is undertaken. As much quantitative and qualitative information as possible should be supplied for a risk-based variance demonstration.

A) Source.

A reasonable estimate of a likely worst-case release incident must be supplied for both types of demonstrations. For example, a likely worst-case release incident from an aboveground tank system might be a catastrophic rupture, releasing the entire contents of the tank. For an underground or inground tank system, the most likely worst-case release event might be a continuous release over a long period of time.

Data on the hazardous constituent concentration(s) and physical/chemical characteristics must be supplied for both demonstrations. For a no-substantial-hazard demonstration, the variance application must demonstrate that as long as the concentration for the hazardous constituents of concern remains at or below the requested concentration limit, and that such concentration limits do not present substantial current or potential hazards to human health or the environment.

The allowable hazardous constituent concentration limit(s) for a risk-based variance will be based on levels that do not pose substantial hazards at the current or potential future point of exposure. The allowable constituent concentration limit(s) must be derived from acceptable exposure levels. EPA-published acceptable exposure levels for human health and the environment (Federal Register, July 29, 1985) can generally be used as allowable constituent concentration limits without performing elaborate exposure pathway analyses or fate and transport modeling. For example, a health-based, acceptable ground water exposure concentration for a constituent that might migrate to ground water can be used as the concentration limit. However, the applicant may have to address the cumulative effects of exposure to a constituent over time by modifying the detectable concentration limit in the waste.

B) Transport Media.

In order to determine how quickly hazardous constituents will migrate, the site's hydrogeologic and ground-water flow characteristics must be supplied for both demonstrations. The unsaturated zone is the transport medium of primary concern in the demonstration of no migration for a variance application. Migration of waste is most likely to occur in the unsaturated soil beneath or adjacent to a tank system. Results from a risk-based variance demonstration should indicate the ability of the unsaturated zone to attenuate waste.

A risk-based variance application should contain a detailed evaluation of site hydrogeology and estimated contaminant fate and transport. Such an evaluation might include information such as the following:

- Soil characteristics (e.g., porosity, density)
- Aquifer characteristics (e.g., depth, thickness, yield, use)
- Estimation of degradation potential (for given constituents) within the unsaturated zone; and

- o Estimation of adsorption potential (for given constituents) within the unsaturated zone.

Other information required for a risk-based variance demonstration includes current ground water quality (including other sources of potential contamination), surface water proximity and quality information, and rainfall patterns.

C) Receptors.

Any modeling procedures and results used to evaluate the potential for migration should be included in the variance application. Information needed includes documentation of the model's approach and its applicability, all parameter values used (with relevant sampling data), all assumptions associated with the model, and associated error with the model. The conceptual model developed for the unsaturated zone should be fully described.

The applicant should demonstrate no contaminant migration to a level of certainty which will ensure that results and conclusions are accurate and reliable. This level of certainty should account for conditions that may occur as a consequence of future natural events or uncontrolled human intrusion. To attain an adequate level of certainty, the applicant should provide an estimate of error that is based on a sensitivity analysis that accounts for all parameters included in the analysis. All data should be demonstrated to be accurate. Field data (such as hydraulic conductivity developed using Test Method 9100) should be used to calibrate and verify modeling calculations.

Population and land-use receptor details must be supplied for both types of demonstrations. The risk must be estimated for an individual but the potential population to be exposed must also be identified. The population drinking and using affected ground water (including current and future rates of usage) and, if the ground water flows to surface water, the population drinking and using affected surface water must be

identified. Wildlife, crops, and vegetation that may come in contact with contaminated soils or water must also be identified. Potential future receptors and land uses should also be described.

D) Risk-Based Variance Examples.

Certain situations where it may be feasible for owners or operators to apply for risk-based variances are described below. As previously discussed, there are two approaches to demonstrating that no present or potential hazard to human health or the environment will occur: (1) no exposure pathway; and (2) no substantial hazard. A detailed example showing how to determine which approach to use and how to then use it will be part of the EPA (to be published) Guidance Manual for Risk-Based Variance from Secondary Containment of Hazardous Waste.

A demonstration of no exposure pathway may be achieved for a variety of situations. For example, hydrogeologic settings exist which preclude the possibility of waste constituent migration to ground water. Many of these are described in the EPA document (to be published) entitled Guidance Criteria for Identifying Areas of Vulnerable Hydrogeology. Considering the cost of a thorough hydrogeologic analysis, however, it may be more cost-effective in some situations to install secondary containment than to attempt to develop the information necessary to support a demonstration of no migration. On the other hand, for those parties having hydrogeological site characterization information readily available (e.g., land disposal facilities), it may be cost-effective to apply for such a variance.

One example of a hydrogeology that could support a demonstration of no exposure pathway is a very thick, impermeable zone that separates the uppermost aquifer from the lower part of the tank. However, if this zone has an appreciable amount of porosity caused by fracturing or solutioning (often seen in areas of karst geology or folded, and/or fractured bedrock), or if surface infiltration or runoff allows recharge to ground or surface water (exceptions being in areas of very arid climate where evapotranspiration greatly exceeds precipitation), then it is not conducive to a demonstration of no exposure pathway.

Another example of a hydrogeology that could support a demonstration of no exposure pathway is an aquifer containing inaccessible ground water. Such aquifers, however, must not be hydraulically connected to surface water or other ground water. One final hydrogeology example is an aquifer containing ground water which is unacceptable for all uses because of its undersirable chemical or low yield characteristics. This aquifer, however, also must not be hydraulically connected to surface water or other ground water.

A demonstration of no substantial hazard must show that, although there is a present or potential exposure pathway, the level of contamination that would result would not pose a substantial hazard to human health or the environment. Such a demonstration would be based on physical, chemical, and biological characteristics of the waste. An example is attenuation in the soil supported by site-specific data on fate related characteristics such as stability of waste constituents affected by chemical, biological, and physical processes. Such attenuation must be adequate to deter the contaminants from reaching the ground water. Another example allows for adequate attenuation such that if the ground water is contaminated, the level of contamination would not pose a substantial present or potential hazard. Such a demonstration would require modeling of the flow through the unsaturated zone to predict the concentration of contaminants in the aquifer. These concentrations would then be compared to established standards and/or be used to estimate human intake. The intakes would be used along with chemical toxicities to characterize risk, and the resulting risk would be reviewed to determine whether it is substantial.

Important chemically mediated processes may involve oxidation, reduction, and hydrolysis. Important biologically mediated processes include biodegradation and biotransformation reactions. Physically mediated processes can involve ion exchange, precipitation, and complexation reactions. Most of the degradation processes depend on the properties of contaminants as well as environmental factors such as microbial populations, solid surfaces, and dissolved constituents present. Because environmental factors are unevenly distributed in nature, however, degradation and reaction rates are not constant and must be assessed on a site-specific basis. Therefore, the use of general information gathered from the literature will be of limited value.

8.3 VARIANCE IMPLEMENTATION PROCEDURES

Citation

264.193(h). The following procedures must be followed in order to request a variance from secondary containment:

(1) The Regional Administrator must be notified in writing by the owner or operator that he intends to conduct and submit a demonstration for a variance from secondary containment as allowed in paragraph (g) according to the following schedule:
   (i) For existing tank systems, at least 24 months prior to the date that secondary containment must be provided in accordance with paragraph (a) of this section.
   (ii) For new tank systems, at least 30 days prior to entering into a contract for installation (New tanks are not eligible for a risk-based variance).
(2) As part of the notification, the owner or operator must also submit to the Regional Administrator a description of the steps necessary to conduct the demonstration and a timetable for completing each of the steps. The demonstration must address each of the factors listed in paragraph (g)(1) or paragraph (g)(2) of this section;
(3) The demonstration for a variance must be completed within 180 days after notifying the Regional Administrator of an intent to conduct the demonstration; and
(4) If a variance is granted under this paragraph, the Regional Administrator will require the permittee to construct and operate the tank system in the manner that was demonstrated to meet the requirements for the variance.

Guidance

As stipulated in the above citation, the following schedule and procedures should be adhered to in requesting a variance from secondary containment:

	Existing Tank Systems	New Tank Systems
Notice of Intent to Regional Administrator (R.A.)	24 months (minimum) prior to when secondary containment is required [See document Section 7.1 for schedule]	(ONLY FOR TECHNOLOGY-BASED VARIANCE). 30 days (minimum prior to entering into a contract for installation
Notice of Intent Requirements	1) Description of steps necessary to conduct demonstrations	1) Description of steps necessary to conduct demonstrations

	2) Timetable for completing demonstration	2) Timetable for completing demonstration
Completion date for Demonstration for a Variance	Within 180 days after R.A. notification	Within 180 days after R.A. notification

If a variance is granted, the owner or operator must construct and operate the tank system in accordance with the proposed demonstration. Additional guidance will be issued by EPA in January, 1987.

8.4 SUMMARY OF MAJOR POINTS

The following points summarize the information contained in this section which should enable a tank system owner or operator to compile a complete application for a variance from secondary containment.

- What type of variance application -- technology-based or risk-based variance -- is most appropriate for a particular tank system?

- If it is a technology-based variance application, are the following details included:

  - the proposed innovative tank system design and operating characteristics;

  - the nature and quantity of waste in the system;

  - the hydrogeologic setting of the facility; and

  - any other relevant factors?

- If it is a risk-based variance application, have the following elements been considered as part of the "risk assessment" demonstration:

  - waste toxicity and migration potential;

- site hydrogeology and land uses;

- soil characteristics;

- permanence of potentially adverse health and environmental effects;

- ground-water and surface-water quality and usages; and

- local climate, e.g., precipitation and evapotranspiration?

o Does the technology-based variance application demonstrate that the technology used will prevent the migration of hazardous constituents into ground waters and/or surface waters at least as effectively as secondary containment with leak detection?

o Does the risk-based variance application demonstrate that there will be no complete pathway for human exposure from potential ground water or surface water contamination or that there is no substantial present or future hazard to human health or the environment?

o Does the variance application address the clean-up of releases to the "zone of engineering control" under a technology-based variance and tank system repairs?

In addition, see Appendix A, "Completeness Checklist," to verify compliance with the requirements of this section.

9.0 CONTROLS AND PRACTICES TO PREVENT SPILLS AND OVERFILLS

Citation

The information requirements for tank systems, to be submitted in a Part B permit application, are stipulated in Sec. 270.16(i). They require the applicant to provide:

> Description of controls and practices to prevent spills and overflows as required under 264.194(b).

These 264.194(b) standards stipulate that

> owners or operators must use appropriate controls and practices [during transfer operations] to prevent spills and overflows from tank systems or secondary containment systems. These include at a minimum: (1) spill prevention controls, such as check valves or dry disconnect couplings, (2) overfill prevention controls, such as automatic feed cutoff or bypass to a standby tank, and (3) maintenance of sufficient freeboard in uncovered tanks to prevent overtopping by wave or wind action or by precipitation.

This provision requires appropriate controls and practices to prevent spills during transfer operations, loading or unloading of a tank. The Agency's major concern is with releases that occur during these operations, especially at facilities that do not yet have secondary containment systems.

Most important to note about the new regulations is that they apply to the tank and all ancillary equipment including such devices as piping, hoses and pumps that are used in the handling of the waste from its point of generation to the hazardous waste storage treatment tanks and, if applicable, from the hazardous waste storage treatment tank(s) to a point of disposal on-site or to a point of shipment for disposal off-site. Therefore, when a hose is used to empty a tank's contents into a truck, it is subject to these requirements.

Guidance

Spills can occur at any storage tank facility because of tank overfilling and drainage from waste transfer hoses. Most of the methods devised for

prevention of transfer spills and overfills are far more applicable with aboveground tank systems, where the spill is highly visible, than with the less visible underground systems.

Guidance for complying with the Sec. 264.194(b) requirements to provide spill/overfill prevention measures is provided.

It should be noted that there is no single best device or operating procedure that will suit every situation; however, there are some standard procedures for preventing transfer spills and overfills with which the applicant should be familiar. The next sections outline these generally accepted devices and procedures.

A description of the transfer spill/overfill prevention procedures employed at a given facility must be included by the applicant in a Part B permit application.

9.1 UNDERGROUND TANKS

A) Elements of an Overfill Prevention System for Underground Storage Tanks.

The following are recommended elements for a complete overfill prevention system:

1) Automatic shutoff devices which prevent overfilling.

2) Sensors for detecting the level of liquid in the tank.

3) High-level alarms which are activated when an overfill is about to occur.

4) Tying in the unloading process with the overfill prevention system is recommended to prevent any unloading from taking place when the overfill prevention system is non-operative.

5) A bypass prevention system might also be included so that the overfill prevention system cannot be overridden by the operator.

These elements are discussed below.

1) AUTOMATIC SHUTOFF CONTROLS

These controls, acting in conjunction with level-sensing devices, perform three major functions: (1) to prevent tank overfilling by shutting off the tank-loading pump at a preset maximum liquid level; (2) to prevent damage to the tank-unloading pump by shutting it off at a low level; and (3) to regulate various flow valves to control product flow. A signal from the level-sensing device is transmitted electrically or pneumatically to the control system. Pneumatic devices require a regulated supply of clean, dry instrument air, generally at 20 pounds per square inch (psi). Electronic or electric devices generally require 115V line voltage. (See Table 9-1 for characteristics of pneumatic and electronic controls.)

2) LEVEL-SENSING DEVICES AND INDICATORS

A variety of devices is available for detecting liquid levels in bulk-storage tanks. Generally, these devices sense liquid characteristics, such as capacitance or thermal conductivity, or operate on such common principles as buoyancy, differential pressure and hydrostatic head. Devices which operate on these common principles act independently of waste-flow rate, pressure and temperature.

Specific types of level-sensing devices and sensors for bulk-storage tanks can be categorized into the following:

1) Float-activated
2) Capacitance
3) Ultrasonic
4) Optical

TABLE 9-1

CHARACTERISTICS OF PNEUMATIC AND ELECTRONIC CONTROLS

Feature	Pneumatic	Electronic
Transmission distance	Limited to few hundred feet	Practically unlimited
Standard transmission signal	3-15 psi practically universal	Varies with manufacturer
Compatibility between instruments supplied by different manufacturers	No difficulty	Nonstandard signals require spec sideration and may not be compat
Control valve compatibility	Controller output operates control valve operator	Pneumatic operators with electro pneumatic converters or electron or electric motor operator requi
Compatability with digital computer or data logger	Pneumatic-to-electric converters required for all inputs	Easily arranged with minimum adde equipment
Reliability	Superior if energized with clean dry air	Excellent under usual environment conditions
Reaction to very low (freezing) temperatures	Inferior unless air supply is completely dry	Superior
Reaction to electrical interference (pickup)	No reaction possible	No reaction with the system if properly installed
Operation in hazardous locations (explosive atmosphere)	Completely safe	Intrinsically safe equipment available must be removed for most maintenance
Reaction to sudden failure of energy supply	Superior - capacity of system provides safety margin - backup inexpensive	Inferior - electrical failure may disrupt plant - backup expensive
Ease and cost of installation	Inferior	Superior
System compatibility	Fair - requires considerable auxiliary equipment	Good - conditioning and auxiliary equipment more compatible to systems approach
Ease and cost of maintenance	Lower if installation costs are not considered	Higher - becomes competitive when including installation is consider
Dynamic response	Slower but adequate for most situations	Excellent - frequently valve becom limiting factor
Operation in corrosive atmosphere	Superior - air supply becomes a purge for most instruments	Inferior - unless special consider is given and suitable steps taken
Performance of overall control systems	Excellent, if transmission distances are reasonable	Excellent - no restriction on tran mission distance
Politics (the unmentioned factor)	Generally regarded as acceptable but not the latest approach	Often regarded as the latest and m modern approach

Source: Anderson, N.A., Instrumentation for Process Measurement and Control, Second Edition, Chilton Book Company, 5601 Chestnut Street, Philadelphia, PA 19139, 1972.

5) Thermal-conductivity
6) Displacer
7) Hydrostatic-head

Float-activated, ultrasonic, optical devices, capacitance, and thermal-conductivity sensors all can be utilized in underground tanks. (See Table 9-2 for an overview of their applications.) The displaced devices and hydrostatic-head sensors are more often utilized in aboveground storage systems and will be discussed in greater detail in the aboveground/inground section.

- Float-Activated Devices--Float-activated devices are characterized by a buoyant element that simply floats on top of the surface of a liquid. Tape-float gauges and float-vent valves are commonly used types of float- activated devices.

  A simple tape-float gauge designed for use in underground gasoline tanks provides an above-the-tank readout of both gasoline and water levels while still prohibiting vapor loss. These can be used for hazardous liquids as well. (See Figure 9-1 for illustration.)

  Float-vent valves, simple and inexpensive, are typically used in underground tanks as well. These valves are installed in the tank's vent line. The float closes the vent line at high liquid levels and blocks the escape of air, causing the pressures inside the tank to equalize with the discharge head in the tank truck and thereby interrupting the flow of liquid. (See Figure 9-2 for illustration.)

  The float device also includes a pressure build-up relief-bleed hole. Once flow from the tank truck has ceased due to pressure equalization, the storage tank fill line can be disconnected as vapor escapes through the bleed hole. The liquid remaining in the fill line can then drain into the tank. If dry-disconnect

TABLE 9-2

LEVEL-DETECTION DEVICES FOR UNDERGROUND STORAGE TANKS

Type	Monitor Liquid Level	Level Indication	Alarm and Shutoff Response
Float Actuated Devices Tape-float gauges	Yes	Gauge	Interfaces with electronic or pneumatic controls
Float-vent valves	No	None	Automatic shutoff
Capacitance devices	Yes	Gauge	Audible alarm and automatic shutoff electronic controls
Thermal-conductivity devices -	Yes	Gauge	Audible alarm and automatic shutoff electronic controls
Optical devices	Yes	Gauge	Audible alarm and automatic shutoff electronic controls

Source: New York State Department of Environmental Conservation, "Technology for the Storage of Hazardous Liquids -- A State-of-the-Art Review" (January, 1983), p. 176.

Figure 9-1

Tape Float Gauge
for
Underground Storage Tank

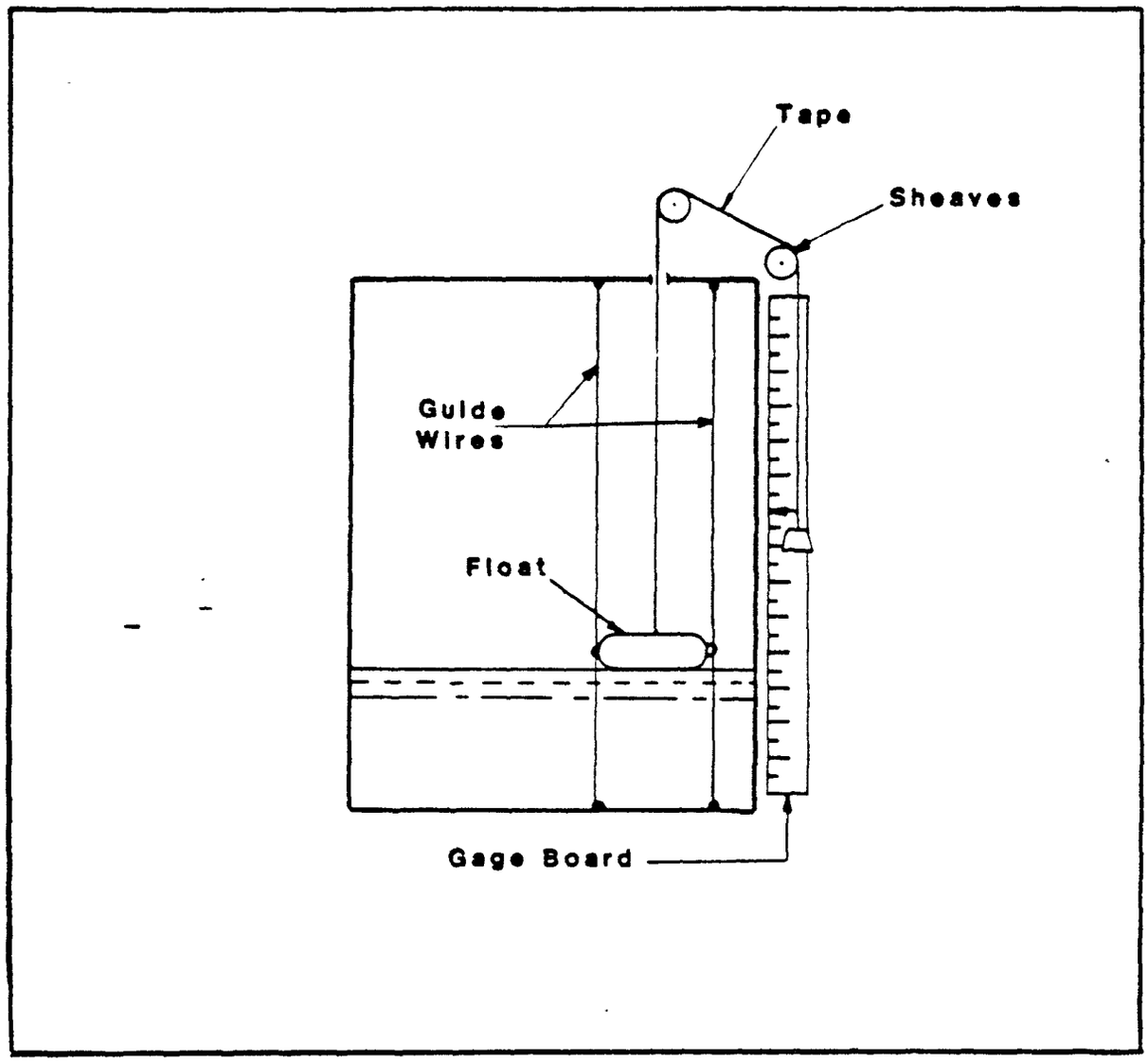

FIGURES ARE FOR ILLUSTRATIVE PURPOSES ONLY. THEY ARE NOT INTENDED FOR USE AS CONSTRUCTION DRAWINGS.

Figure 9-2

Float Vent Valves

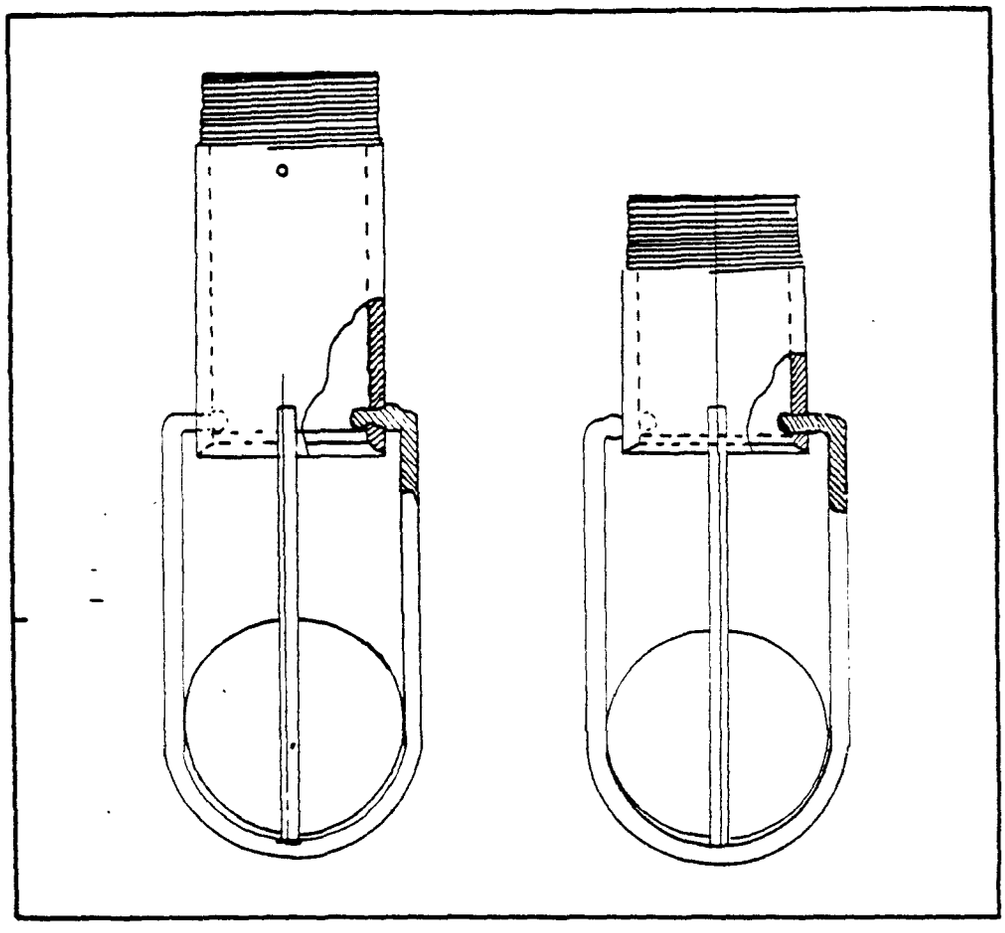

FIGURES ARE FOR ILLUSTRATIVE PURPOSES ONLY. THEY ARE NOT INTENDED FOR USE AS CONSTRUCTION DRAWINGS.

couplings are used, the liquid will be held in the transfer line until draining can occur, thus preventing any spillage of product.

Developed as part of the Vapor Recovery Stage I System for gasoline distribution systems, the purpose of this device is to prevent product spillage into the vapor manifold to prevent lead contamination of an unleaded gasoline grade. It is not generally used for overfill prevention purposes, but there is some merit in its use for this purpose.

The float-vent valve must be installed in an "extractable tee" connection, which permits removal of the float valve for tank testing. Important to note is that the Kent-Moore (Heath Petro-Tite Tank Tightness) test cannot be run with the valve in place.

Float-actuated devices are made of a variety of materials, including aluminum, stainless steel, and coated steel, depending upon the application. These devices may be used in conjunction with pneumatic or electronic devices to operate valves, pumps, remote alarms, or automatic shutoff systems.

- Capacitance Sensors--These liquid-level monitoring devices are based on the electrical conductivity of fluids. A standard capacitance sensor consists of a rod electrode positioned vertically in a vessel with the other electrode usually being the metallic tank wall. The electrical capacitance between the electrodes is a measure of the height of the interface along the rod electrode. The rod is usually electrically insulated from the liquid in the tank by a coating of plastic.

  Capacitance devices are suitable for use with a wide range of liquids, including: petroleum products, such as gasoline, diesel fuel, jet fuel and no. 6 fuel oil; acids; alkalis; solvents; and other hazardous liquids. These may be used in

conjunction with electronic controls to operate pumps, valves, alarms, and other external control systems.

- Thermal-Conductivity Sensors--These devices operate on the principle of thermal-conductivity of fluids. A typical thermal-conductivity sensor consists of two temperature-sensitive probes connected in a Wheatstone bridge (a type of electrical circuit configuration.) When the probes are situated in air or gas, a maximum temperature differential exists between the active and reference sensors, which results in a great imbalance in the bridge circuit and a correspondingly high-bridge voltage. When the probes are submerged in a liquid, the temperature between the sensors is equalized, and the bridge is brought more nearly into balance. The probes may be installed through the side wall of a tank or pipe, or assembled together on a self-supporting mounting and suspended through a top connection on the tank.

  Thermal-conductivity devices may be used to control level with a good degree of accuracy. They may be used with any liquid, regardless of viscosity or density. They may also be used with immiscible liquids and slurries and in conjunction with electronic controls to operate pumps, valves, alarms, or other external control systems.

- Ultrasonic Sensors - These devices operate on the principle of sonic-wave propagation in fluids. A piezoelectric transmitter and receiver separated by a short gap are characteristic of this device. When the short gap fills with liquid, ultrasonic energy is transmitted across to a receiving element, thereby indicating the liquid level. These devices can be used in conjunction with electronic devices to operate pumps, valves, alarms, or other external control systems.

  A sonar device is another sonic technique used for level measurement. A pulsed sound wave, generated by a transmitting element, is reflected from the interface between the liquid and

the vapor-gas mixture and returned to the receiver element. The level is then measured in terms of the time required for the sound pulse to travel from the transmitter to the vapor/liquid interface and return.

- Optical Sensors--Optical sensors operate on the principle of light refraction in fluids. An optical-level monitoring system consists of a sensor and electronic control devices. An electronic signal is generated and aimed at the tank-mounted sensors, which then convert the electronic signal to a light pulse. This light pulse is transmitted into the tank by fiber optics, through a prism, and out again via fiber optics. The light pulse is then converted to a specific electronic signal to indicate the liquid level. A major advance of this system is that it is self-checking. Any interruption will set off the alarm, thereby automatically alerting the operator to an equipment malfunction.

  A common application of an optical-sensing system for bulk-storage tank is shown in Figure 9-3. Essentially the sensor detects the level of liquid in the tank and transmits the signal to the controller device (i.e., control monitor), which in turn activates either the shutoff valve or the level alarm.

3) HIGH LEVEL ALARMS

High-level alarms are essential to a comprehensive overfill prevention system. Overfill alarms can be either audible or visual. When monitoring several tanks at once, warning lights should be assigned to each tank to alert the operator as to which tank is overfilling.

B) Transfer Spill-Prevention Systems for Underground Tanks.

Spills during transfer operations can be minimized by using couplings equipped with spring-loaded valves that automatically block flow when the

Figure 9-3

Optical Liquid Level Sensing System for Bulk Storage System

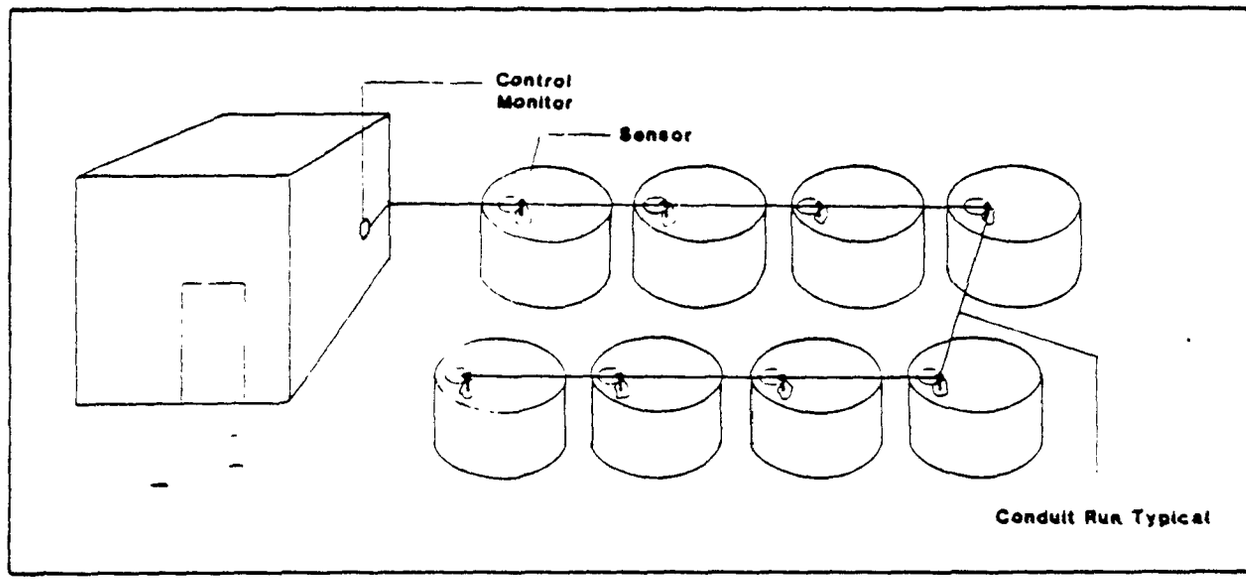

FIGURES ARE FOR ILLUSTRATIVE PURPOSES ONLY. THEY ARE NOT INTENDED FOR USE AS CONSTRUCTION DRAWINGS.

hoses are disconnected. Quick-disconnect couplings equipped with ball valves and dry-disconnect couplings are commonly used coupling types. Emergency shutoff valves might also be installed in the product transfer line to stop flow of hazardous products in case of fire. Applications of these devices are discussed below. (See Table 9-3 for summary.)

1) CHECK VALVES

Check valves can be used in the discharge piping of a pump or the fill line of a tank to automatically prevent backflow of a liquid. Three common types of check valves are: (1) piston or ball-check valves which are typically referred to as lift-check valves, (2) tilting disk-check valves; and (3) swing-check valves. Check valves are available in a wide variety of sizes and materials of construction to suit most applications. Cross-sectional views of these types of check valves portray the various methods of preventing backflow and are shown in Figures 9-4, 5, 6 and 7.

2) COUPLINGS

When transferring hazardous materials from tank to tank, spills can be prevented by using tight couplings. Several types of couplings are available. Selection of couplings should be based on temperature, pressure, and the chemical properties of the materials being transferred. With high temperatures and pressures, couplings must be attached more securely. The amount of pressure a coupling generally can withstand is usually determined by the strength of the base-coupling connection. If applied properly and at average working temperatures: 1) bolt clamps will handle low pressure, 2) bands will take low to medium pressures, and 3) interlocking clamps and swaged or crimped ferrules will handle high pressure. Chemical properties of materials being transferred might also be considered when

TABLE 9-3

TRANSFER SPILL-PREVENTION SYSTEMS

System	Function	Spill Control	Applications
Ordinary quick-disconnect coupling	Product transfer	None	Tank vehicles and storage tanks
Quick-disconnect coupling equipped with ball-valve	Product transfer	Built-in valve reduces spills from disconnect hoses	Tank vehicles and storage tanks
Dry-disconnect coupling	Product transfer	No spills from disconnected hoses	Tank vehicles and storage tanks
Emergency shutoff valves	Flow control	A fusible metal link melts and closes the valve in case of fire or impact	For use any place where in the event of fire it is important to stop flow

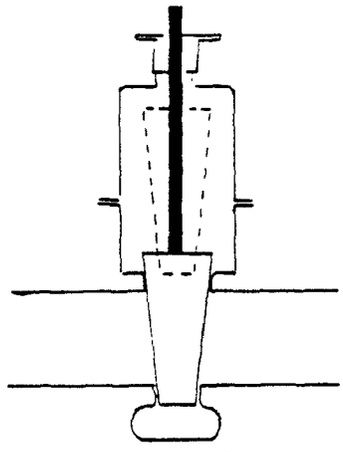

Gate Valve
Composed of a body containing a gate that interrupts flow

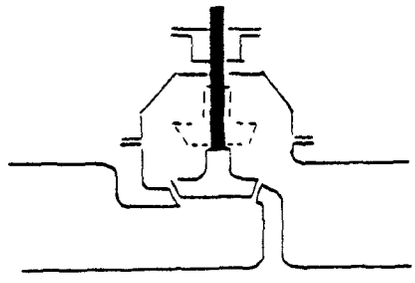

Globe Valve
Valve disk moves axially to rest against valve seat, blocking flow

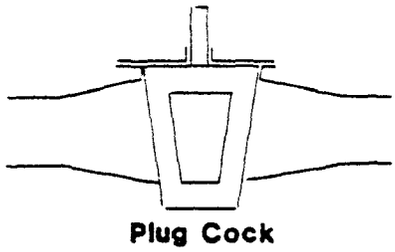

Plug Cock
Composed of a tapered plug with center hold that fits snugly into correspondingly shaped valve seat

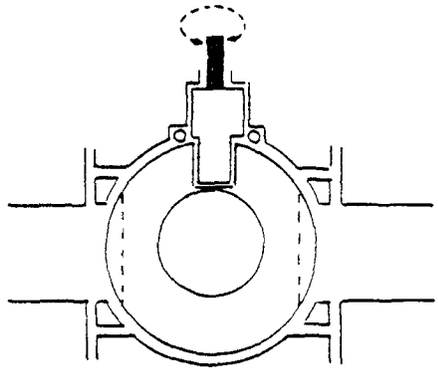

Ball Valve
Similar to plug cocks with the exception that the plug is cylindrical

Figure 9-4
Types of Valves

FIGURES ARE FOR ILLUSTRATIVE PURPOSES ONLY. THEY ARE NOT INTENDED FOR USE AS CONSTRUCTION DRAWINGS.

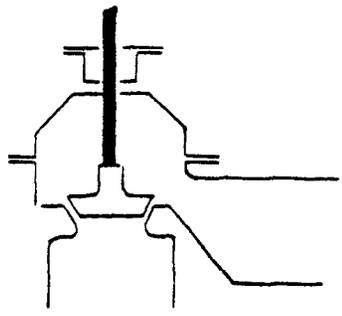

Angle Valve
Similar to globe valve

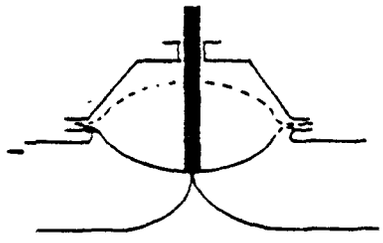

Diaphragm Valve
Diaphragm functions as both closure mechanism and seal

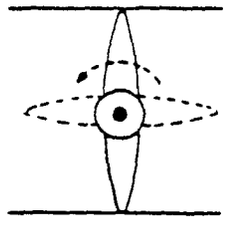

Butterfly Valve
A 90-degree turn of valve stem changes valve from completely closed to completely open

Figure 9-5
Types of Valves (Cont.)

FIGURES ARE FOR ILLUSTRATIVE PURPOSES ONLY. THEY ARE NOT INTENDED FOR USE AS CONSTRUCTION DRAWINGS.

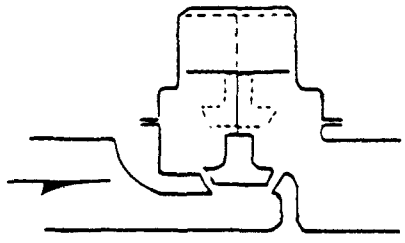

Lift Check Valve, Globe

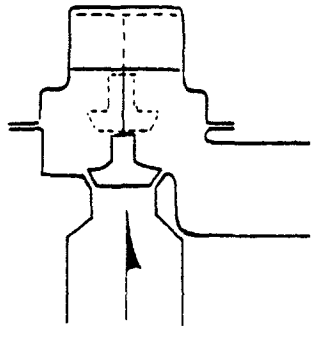

Lift Check Valve, Angle

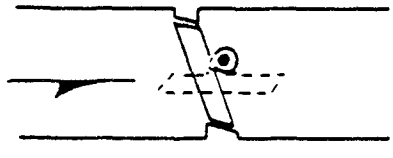

Tilting Disk Check Valve

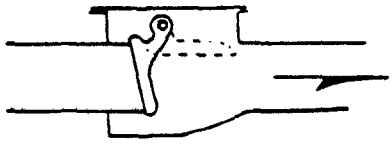

Swing Check Valve

Figure 9-6
Check Valves Used to Prevent Backflow

FIGURES ARE FOR ILLUSTRATIVE PURPOSES ONLY. THEY ARE NOT INTENDED FOR USE AS CONSTRUCTION DRAWINGS.

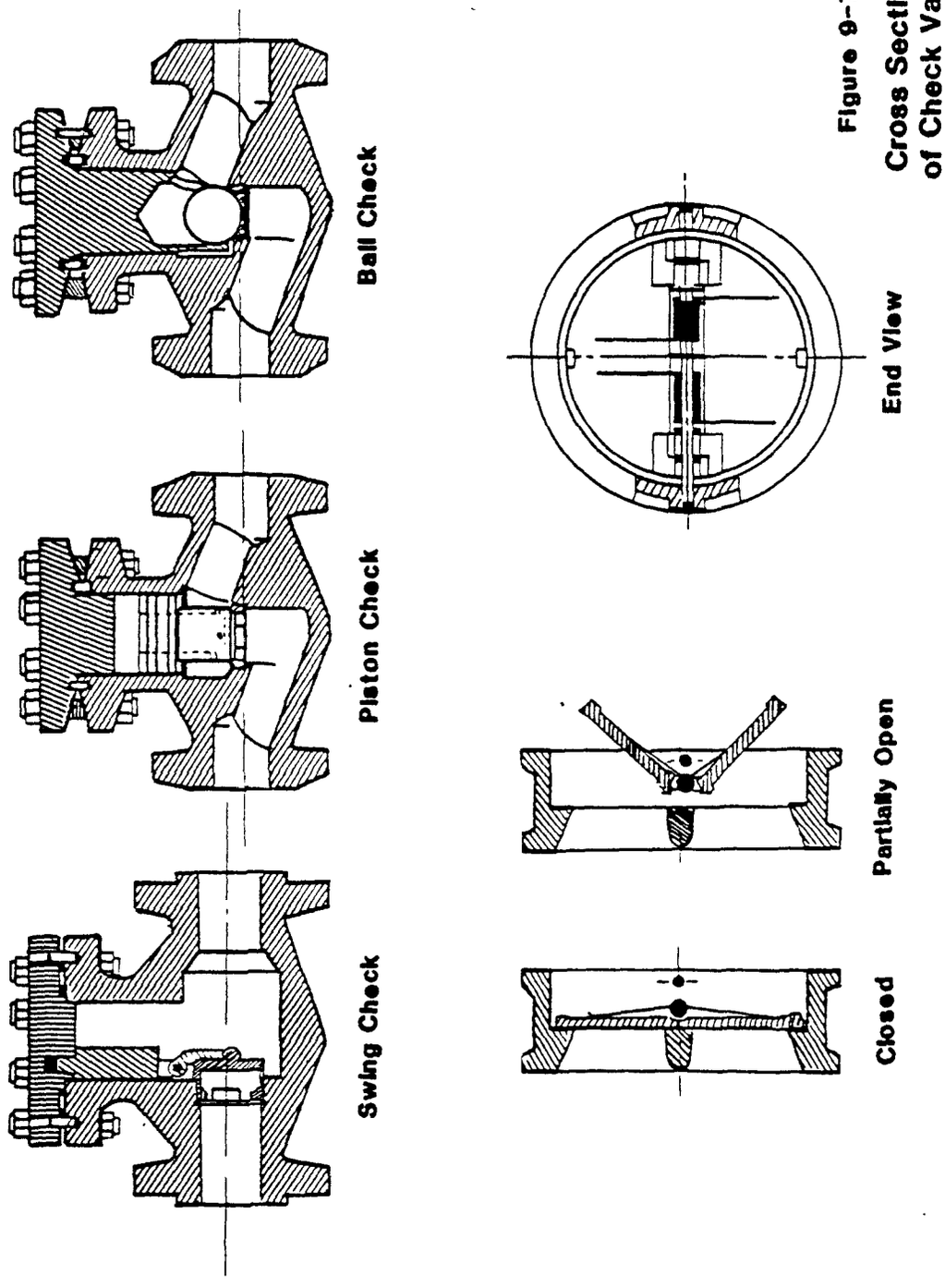

Figure 9-7
Cross Sections of Check Valves

selecting couplings, as certain compounds might in some cases damage the couplings.

As previously mentioned in this section, quick-disconnect couplings are popular because they are lighter and, therefore, easier to handle than other types of couplings. However, when using these types of couplings, additional measures must be taken to prevent spills or loss of waste remaining in the transfer lines. Quick-disconnect couplings equipped with ball valves can be used to minimize spills when the hoses are disconnected. Dry-disconnect couplings are best suited for product spill control because they are equipped with a spring-loaded valve. This spring-loaded valve is usually closed until the coupling is attached and the valve is manually opened with a lever. See Figure 9-8 for a demonstration of the differences among available types of couplings.

Imbiber beads in the fill box may be useful in soaking-up small spills. These beads will absorb hydrocarbons and expand many times their size. The owner/operator must be aware that these beads do not absorb water, however, and should be evaluated for compatibility with the spilled waste.

(C) Proper Operating Practices During Loading and Unloading.

In addition to appropriate spill/overflow prevention control devices, certain sound operating practices also should be followed to prevent spills/overfills during loading and unloading. Recommended practices that are applicable to the safe transfer of any hazardous liquid waste include the following:

(1) The driver, operator, or attendant of any tank vehicle should neither remain in the vehicle nor leave the vehicle unattended during the loading or unloading process. The delivery hose is considered to be part of the tank vehicle during the loading/ unloading process, and the person overseeing the process should be aware of this and any potential problems. In addition, the responsible person must be

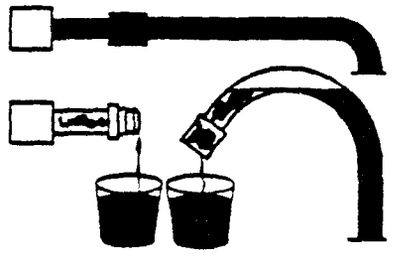

1. Ordinary Quick Disconnect

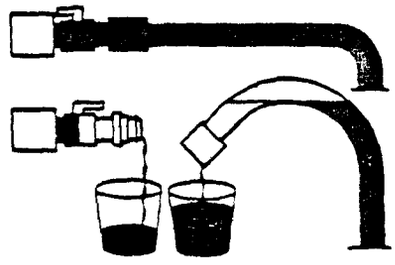

2. Quick Disconnect Plus Ball Valve

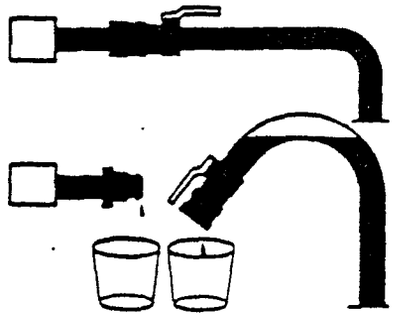

3. Dry Disconnect

Figure 9-8
Types of Couplings

FIGURES ARE FOR ILLUSTRATIVE PURPOSES ONLY. THEY ARE NOT INTENDED FOR USE AS CONSTRUCTION DRAWINGS.

aware of all other potential problems and dangers (overfilling, leaks, spills, vapor or liquid explosions, fire, etc.) and should remain alert at all times. Human error is the major cause of transfer spill incidents, and in most cases spills can be avoided through proper personnel training and alert observation of all operations. To minimize the potential for human error, some companies prefer to have their own trained personnel oversee the loading/unloading operations.

(2) Loading and unloading of tank vehicles should be done in approved locations.

(3) To minimize the possibility of fire or explosion when transferring ignitable liquids, motors of tank vehicles or auxiliary or portable pumps should be shut down during making or breaking hose connections. In addition, if the motor of the tank vehicle is not required for the loading/unloading process, the motor should be kept off throughout the transfer of the liquid.

(4) Cargo tanks containing volatile, flammable or combustible liquid should not be fully loaded. Sufficient space, or outage, must be provided to prevent leakage due to thermal expansion of the transferred liquid. One percent is the minimum recommended outage requirement.

(5) Delivery of Class I liquids to underground tanks of more than 10,000 gal. (3800L) capacity must be made by means of tight connections between the hose and fill pipe.

(6) No flammable or combustible liquid shall be transferred to or from any tank vehicle unless the parking brake is set securely and all other precautions have been taken to prevent motion of the vehicle.

(7) To prevent the accidental mixing of incompatible materials, use labels, markings, or color codes on hoses and special couplings that can be used only for transferring certain wastes.

(8) Conduct periodic inspection of hoses for leaks.

Refer to National Fire Protection Association (NFPA) 385 (Section - Loading and Unloading of Tank Vehicles) for more information on loading and unloading practices.

9.2 ABOVEGROUND/INGROUND/ONGROUND TANKS

Transfer spills and overfills for aboveground/inground/onground tanks can be prevented by using the equipment and practices outlined in this section. Much of the recommended equipment and many of the practices are also applicable to underground tanks, as cited in the foregoing section, including:

1) Installation of a complete overfill prevention system, which includes:

   - Level sensors and gauges to indicate the liquid level in the tank;
   - High-level alarms;
   - Automatic shutdown controls or automatic flow-diversion controls to prevent overfilling;
   - Provisions for collecting overflow materials in case of emergency overflow to adjacent tanks; and
   - Daily monitoring of the system by a reliable individual.

2) Transferring hazardous wastes at established stations equipped with curbing, paving, and catchment facilities.

3) Use of dry-connect couplings on transfer pipes and hoses as used in underground tank systems.

(See Figure 9-9 for an illustration of an overfill prevention system.)

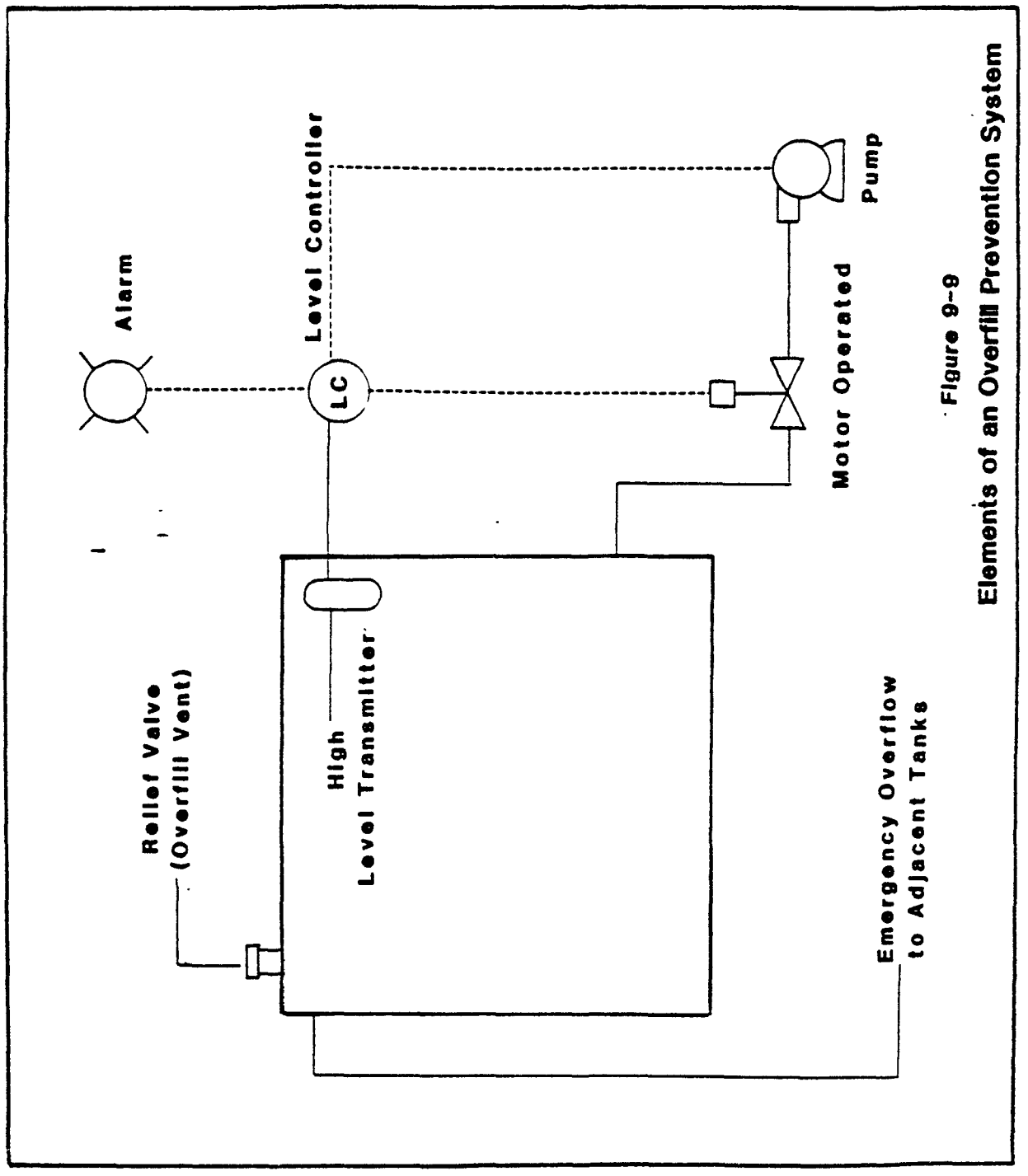

Figure 9-9
Elements of an Overfill Prevention System

FIGURES ARE FOR ILLUSTRATIVE PURPOSES ONLY. THEY ARE NOT INTENDED FOR USE AS

4) Installation of redundant valves and instrumentation.

A) Elements of an Overfill Prevention System for Aboveground/Inground/Onground Storage Tanks.

1) LEVEL-SENSORS AND GAUGES

Level-sensing devices and sensors that may be used in aboveground/inground/onground tanks include:

(1) float-activated
(2) displacer
(3) hydrostatic-head
(4) capacitance
(5) thermal-conductivity
(6) ultrasonic devices
(7) optical

Capacitance and thermal-conductivity sensors, and ultrasonic and optical devices and their applications were discussed in detail in the underground tanks section. Certain float-activated and displacer devices and hydrostatic-head sensors (or pressure devices) are primarily applicable to aboveground/inground/ onground tanks and are discussed below.

Level-sensing devices may be top-mounted or side-mounted, depending on the type of device and the location of the probe connection on the tank. The material the probe is made of must be carefully selected to ensure compatibility with the liquid in the tank.

(See Table 9-4 for a comparison of different level-detecting devices and the types of gauges, alarms, and automatic controls with which they can interface.)

- Float Systems--Float-activated devices are characterized by a bouyant member that floats on the surface of the stored hazardous liquid. Float devices are classified on the basis of

TABLE 9-4

LEVEL-DETECTION DEVICES FOR OVERFILL PROTECTION SYSTEMS FOR ABOVEGROUND/INGROUND/ONGROUND STORAGE TANKS

Type of Device	Monitor Liquid Level	Level Indi-cation	Alarm and Shutoff Response
Float-Actuated Devices			
Tape or chain float gauges	Yes	Gauge	Interfaces with electronic or pneumatic controls
Lever and shaft mechanisms	Yes	Gauge	Interfaces with electronic or pneumatic controls
Magnetically-coupled	Yes	Gauge	Interfaces with electronic or pneumatic controls
Displacer Devices			
Flexure-tube displacer	Yes	Gauge	Interfaces with electronic or pneumatic controls
Magnetically coupled displacers	Yes	Gauge	Mechanical
Torque-tube displacers	Yes	Gauge	Mechanical
Pressure Devices			
Head systems on pressurized tanks	Yes	Gauge	Interfaces with electronic or pneumatic controls
Bubble-tube systems	Yes	Gauge	Interfaces with electronic or pneumatic controls
Pressure gauge-open vessel	Yes	Gauge	Interfaces with electronic or pneumatic controls
Capacitance Devices	Yes	Gauge	Audible alarm and automatic shutoff; electronic controls
Thermal-Conductivity Devices	Yes	Gauge	Audible alarm and automatic electronic controls
Ultrasonic Devices	Yes	Gauge	Audible alarm and automatic shutoff; electronic controls
Optical Devices	Yes	Gauge	Audible alarm and automatic shutoff; electronic controls

the method used to couple the float motion to the indicating mechanism (gauge). Chain or tape-float gauges, lever and shaft-float gauges, and magnetically coupled floats are described below.

-- Chain or Tape-Float Gauges consist of a float connected by a tape or a chain to a board or indicator dial. Because of their low cost and reliability, these gauges are commonly used in large atmospheric storage tanks. Drawbacks to using these devices include: (1) potential for getting out of alignment;(2) corrosion of the float material when improperly selected; and (3) potential for jamming and freezing of the float linkage. (See Figure 9-10.)

-- Lever & Shaft-Float Gauges are characterized by a hollow metal sphere, sometimes filled with polyurethane foam, and a lever attached to a rotary shaft that transmits the float motion to the exterior of the vessel via a rotary seal. These float systems are applicable to atmospheric as well as pressurized tanks. Selection of an appropriate float material is necessary to ensure compatibility with the hazardous liquid. (See Figure 9-11.)

-- Magnetically Coupled Floats consist of a permanent magnet attached to a privoted mercury switch. The float and guide tube that come in contact with the measured liquid are available in a variety of materials for resistance to corrosion and chemical attack. These gauges may be used in conjunction with pneumatic and electronic controls to operate pumps, valves, alarms and other external systems. (See Figure 9-12.)

o Displacer Systems. These devices use the buoyant force of a partially submerged displacer to measure liquid level. Accurate measurement of liquid level with displacement devices depends upon precise knowledge of liquid and vapor densities. These

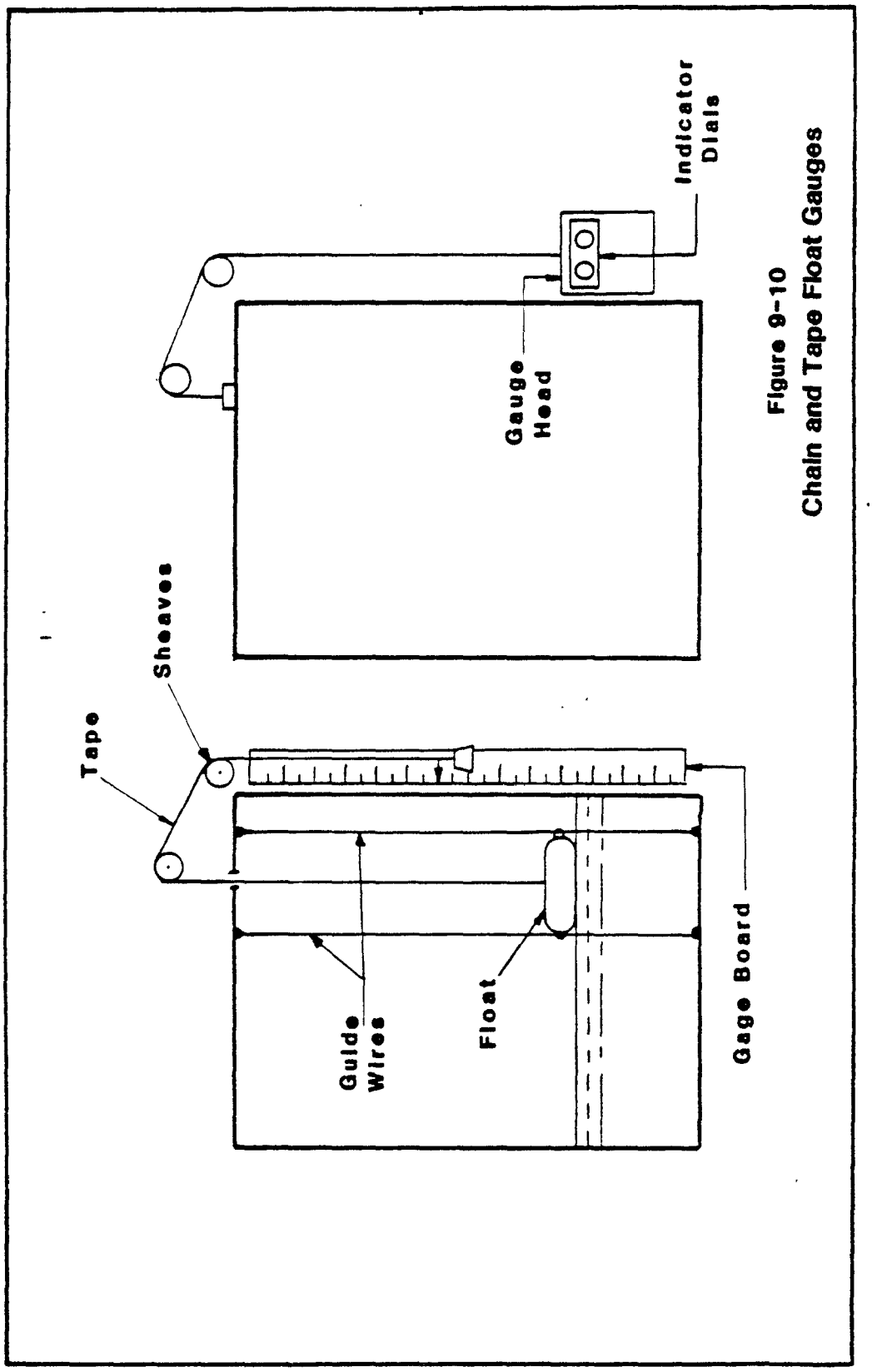

Figure 9-10
Chain and Tape Float Gauges

FIGURES ARE FOR ILLUSTRATIVE PURPOSES ONLY. THEY ARE NOT INTENDED FOR USE AS CONSTRUCTION DRAWINGS.

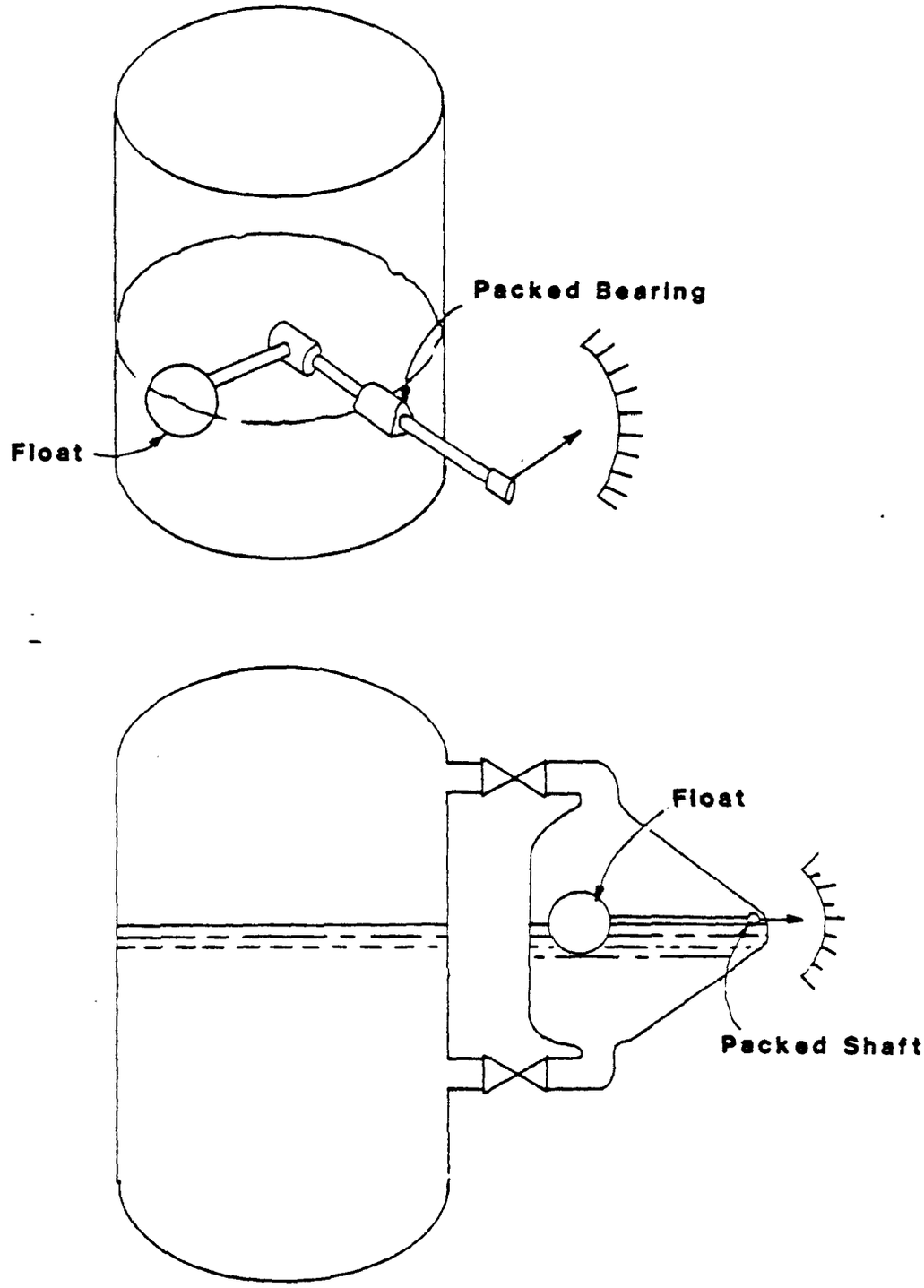

Figure 9-11

Lever and Shaft Float Gauges

FIGURES ARE FOR ILLUSTRATIVE PURPOSES ONLY. THEY ARE NOT INTENDED FOR USE AS CONSTRUCTION DRAWINGS.

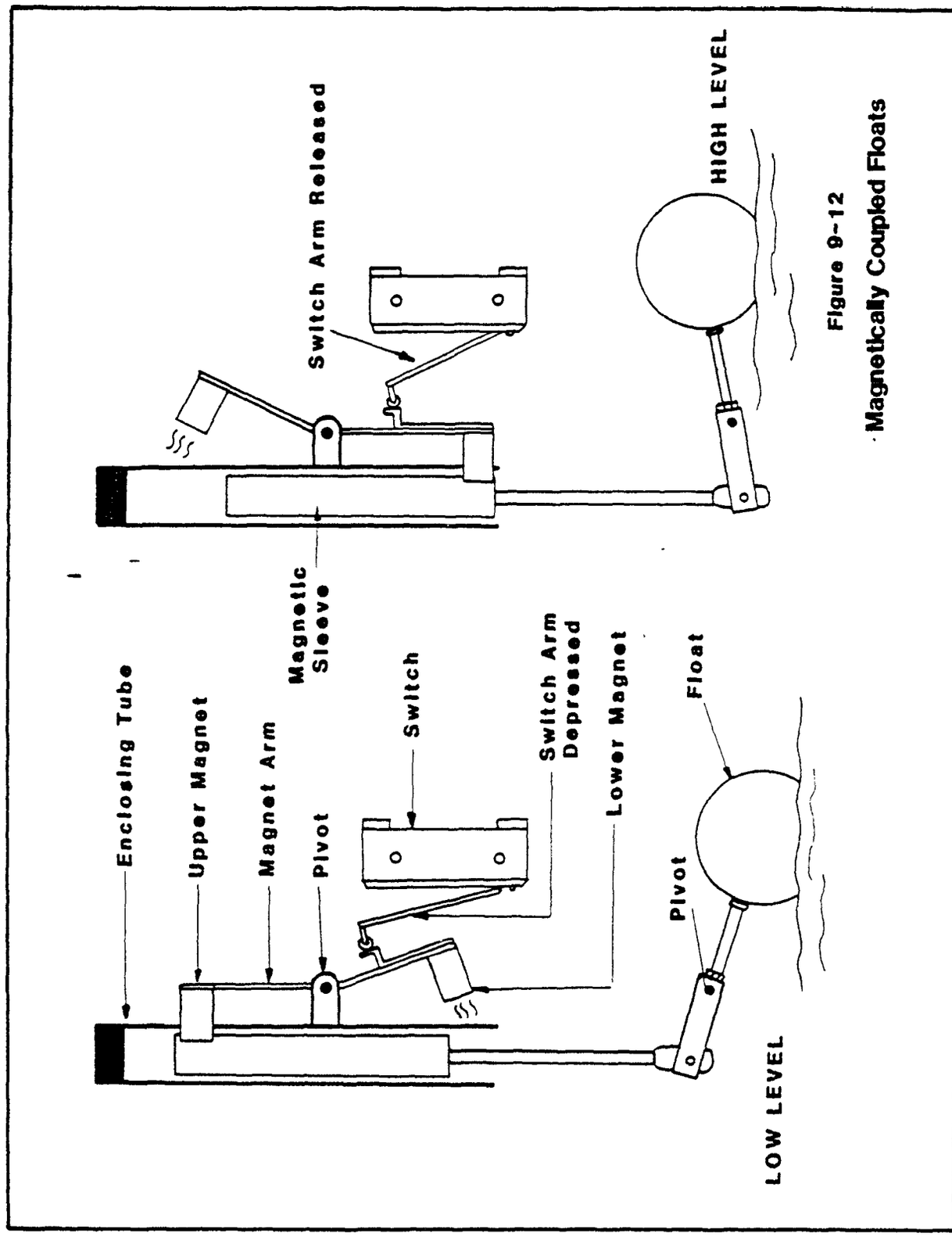

Figure 9-12
Magnetically Coupled Floats

FIGURES ARE FOR ILLUSTRATIVE PURPOSES ONLY. THEY ARE NOT INTENDED FOR USE AS CONSTRUCTION DRAWINGS.

systems can be used in cage mountings or side mountings in vented (atmospheric), pressurized, or evacuated (vacuum) tanks. Three commonly used displacer systems--flexure-tube, magnetically-coupled and torque-tube--are briefly described below.

-- Flexure-Tube Displacers, as compared with other devices, are relatively simple, consisting of an elliptical or cylindrical float mounted on a short arm connected to the free end of a flexible tube. The fixed end of the same tube is attached to a mounting flange. These devices are side-mounted and are most typically used to directly activate either an electrical level switch or a pneumatic pilot. (See Figure 9-13.)

-- Magnetically-Coupled Displacers are displacer-activated units characterized by magnetic coupling. These types of devices are most often mounted in external displacer cages and require two tank connections, one above and one below the liquid level. They are compatible with both pneumatic and electronic controls. (See Figure 9-14.)

-- Torque-Tube Displacers are among the most widely used level-measuring devices. This type of device is suspended on a displacer rod attached to a torque tube. (See Figure 9-15.)

o Hydrostatic-Head or Pressure Devices. As with displacer devices, an accurate measurement of liquid level by hydrostatic-head or pressure devices depends upon a precise knowledge of liquid and vapor densities inside the tank. Most of these types of systems use standard pressure or differential measuring devices and are compatible with

Figure 9-13

Flexure-Tube Displacer

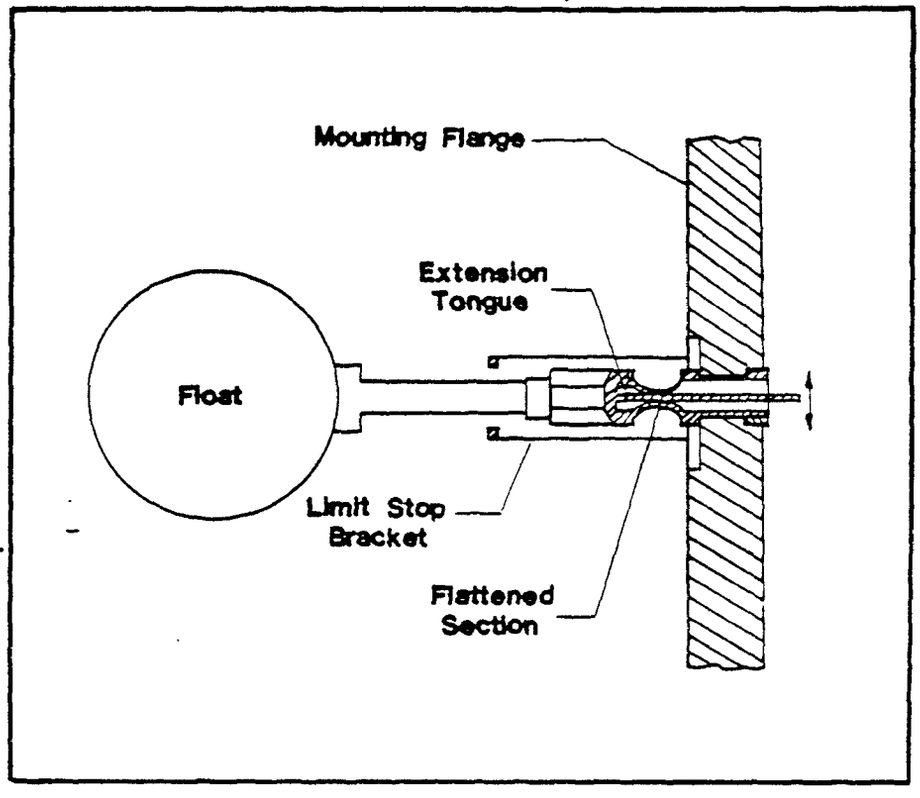

FIGURES ARE FOR ILLUSTRATIVE PURPOSES ONLY. THEY ARE NOT INTENDED FOR USE AS CONSTRUCTION DRAWINGS.

Figure 9-14

Magnetically Coupled Displacers

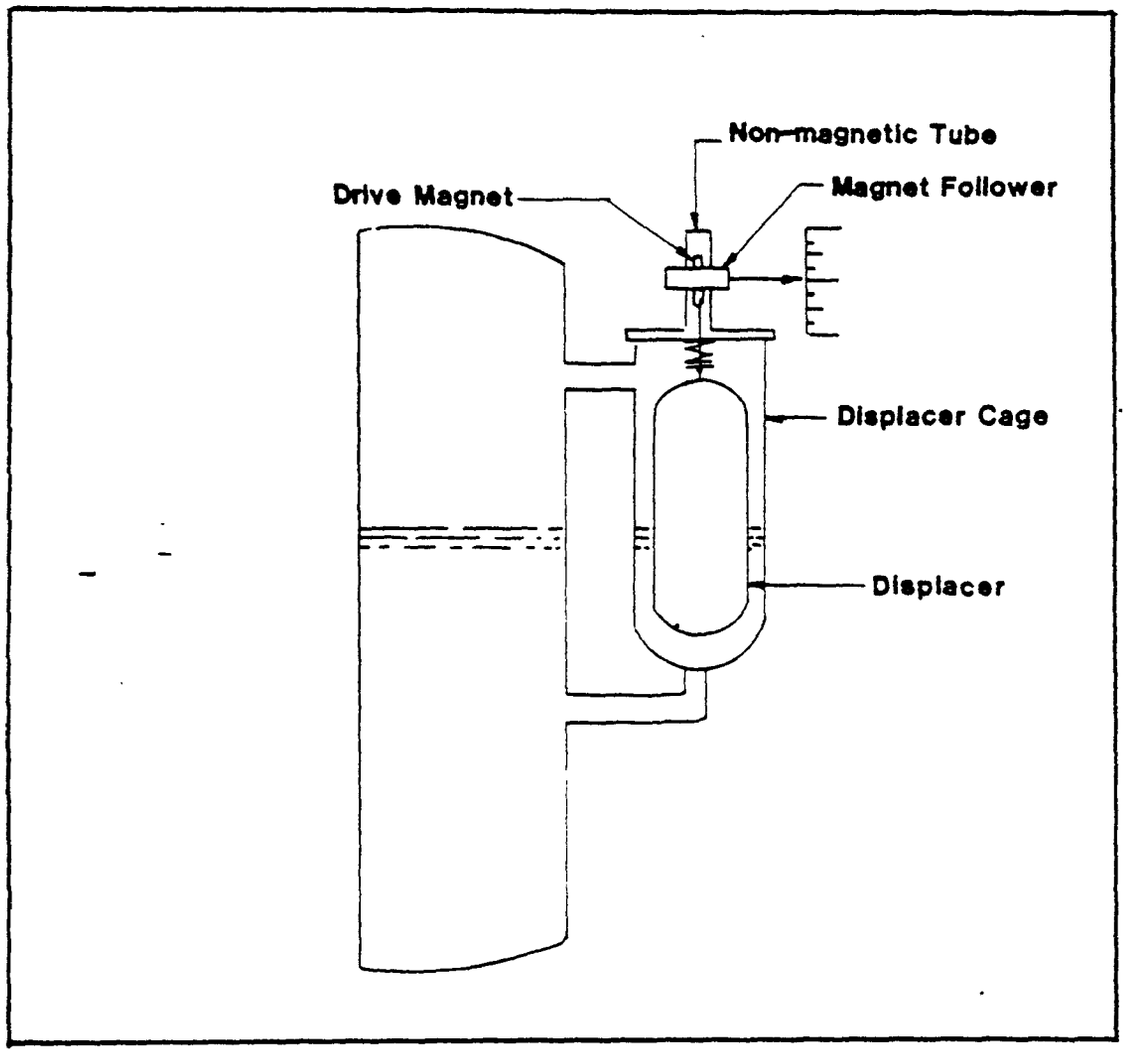

FIGURES ARE FOR ILLUSTRATIVE PURPOSES ONLY. THEY ARE NOT INTENDED FOR USE AS CONSTRUCTION DRAWINGS.

Figure 9-15

Torque-Tube Displacer

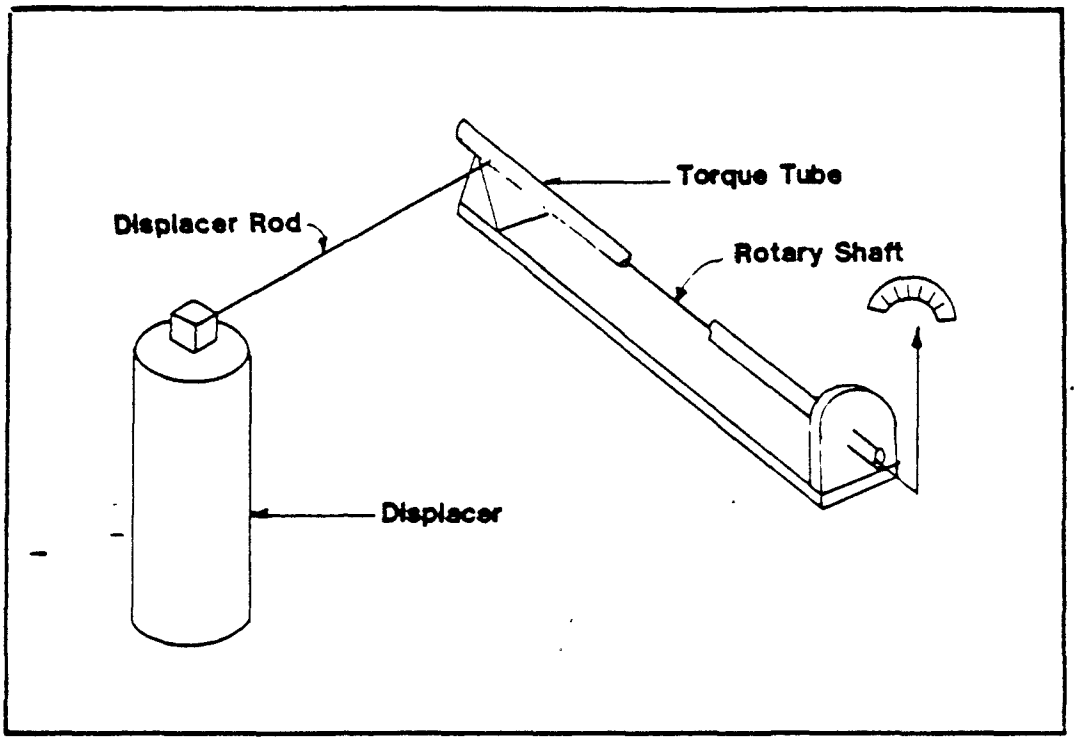

FIGURES ARE FOR ILLUSTRATIVE PURPOSES ONLY. THEY ARE NOT INTENDED FOR USE AS CONSTRUCTION DRAWINGS.

either pneumatic or electronic controls. Pressure-gauge systems on open vessels, bubble-tube systems, and head systems on pressurized tanks are commonly recommended varieties of pressure devices and are briefly described below.

-- Pressure-Gauge Systems in open vessels are the simplest application of head-level measurement, with the pressure-measuring element located at or below the minimum operating level in the tank. The owner or operator must note that the pressure piping between the open vessel and the measuring element must be sloped upward toward the vessel in order to prevent errors due to entrapped air or other gases. A drain valve should be provided at the measuring element to allow sediment to be flushed from the piping. This type of level-sensing device is compatible with both pneumatic and electronic controls, although electro-pneumatic converters may be required when electronic controls are used.

-- A Bubble-Tube System maintains an airstream by the insertion of a tube into the tank through which an air stream is maintained. The pressure required to keep the liquid out of the tube is proportional to the liquid level in the tank. Bubble-tube systems are particularly appropriate to use with liquids that are corrosive and viscous, contain entraned solids, and are subject to freezing. These systems are most commonly used in conjunction with pneumatic controls, but in most cases they may also be used with electronic controls if electro-pneumatic converters are provided. Bubble-tube systems are in most instances more expensive than float or displacer-type systems because they require a constant supply of clean, dry instrument air. (See Figure 9-16.)

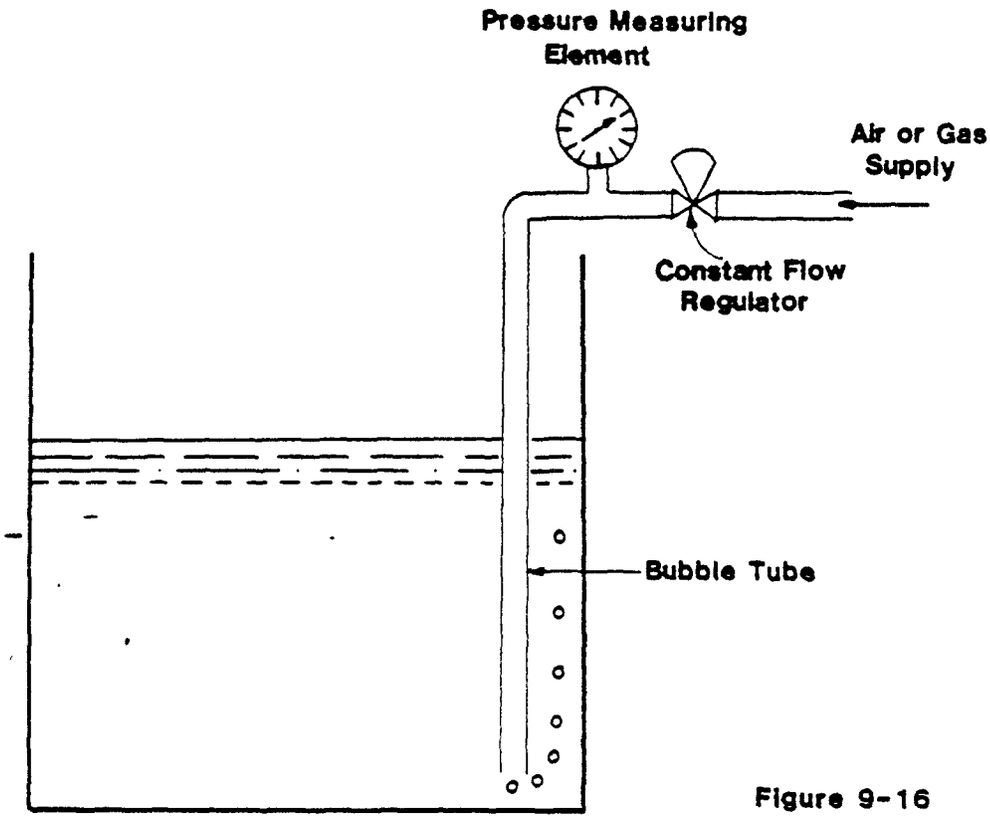

Figure 9-16

Bubble Tube System

FIGURES ARE FOR ILLUSTRATIVE PURPOSES ONLY. THEY ARE NOT INTENDED FOR USE AS CONSTRUCTION DRAWINGS.

-- With Head Systems On Pressurized Tanks, a differential pressure measurement is taken the read the liquid level. When using this system, any of the conventional differential pressure-measuring devices may be used.

Selection of the appropriate hydrostatic/pressure device is very important because several factors can have an impact on its accuracy. The density and vapor pressure of the hazardous liquid must be known. Hydrostatic-heads that are not used for level measurement must be eliminated or compensated for. The level above the lower tank connection (i.e., the discharge connection in the case of an aboveground tank and the fill connection in the case of an underground tank) is measured by the differential pressure across the measuring element. This particular measurement is accurate only if: (1) compensation is made for any deviation of the density of the liquid; (2) the connection of the low-pressure side of the measuring element contains no liquid that has accumulated because of overflow or condensation; (3) the density of the air-vapor mixture above the liquid is either negligible or compensated for; and (4) the measuring element is located at the same elevation as the minimum level to be measured or suitable compensation is made. Finally, either pneumatic or electronic controls may be used with these devices.

2) HIGH-LEVEL ALARMS

A high-level alarm system is essential to performance of an overfill prevention system. Audible alarms, indicator lights, or both are acceptable. When monitoring several tanks at once, it is recommended that both audible and visual alarms be used. In this case, one indicator light per tank is usually necessary to alert the operator as to which tank is overfilling. In any event, an indicator light should be placed where it can be readily seen by the individual responsible for the filling operation.

3) AUTOMATIC SHUTDOWN OR FLOW DIVERSION

Another important element in the overfill prevention system is the automatic shutdown or control device. In the case of an impending overfill, such a device automatically shuts down to stop or divert flow. This device acts in conjunction with the level-sensing device to perform one or more of the following functions:

- Prevent tank overfilling by shutting off the tank-loading pump.

- Prevent damage to the tank-unloading pump by shutting it off at a low level.

- Operate various flow-control valves and pumps to divert flow to another storage tank if an overfill situation occurs.

Control devices can be provided for loading a predetermined quantity of liquids as well. For example, a loading area at a tank truck loading station could be equipped with a level-sensing device and automatic control system which shuts off the flow of liquid when a predetermined level is reached in the tank truck. As mentioned in the underground tanks section, automatic control devices can be electrical, pneumatic, or mechanical in nature. Electrical and pneumatic controls tend to be more widely used because they have fewer moving parts and are more adaptable to remote operation. (See Figure 9-17.)

4) EMERGENCY OVERFLOW TO ADJACENT TANKS

An emergency overflow system is another important element in a complete overfill prevention system, since it can be activated by automatic control in the event that tank overfilling cannot be avoided through other means (i.e., pump shutdown). Such a system can also be manually operated in the event that the automatic control system malfunctions. In addition, provisions must be made for a

Figure 9-17

Loading Arm Equipped with Automatic Shutoff

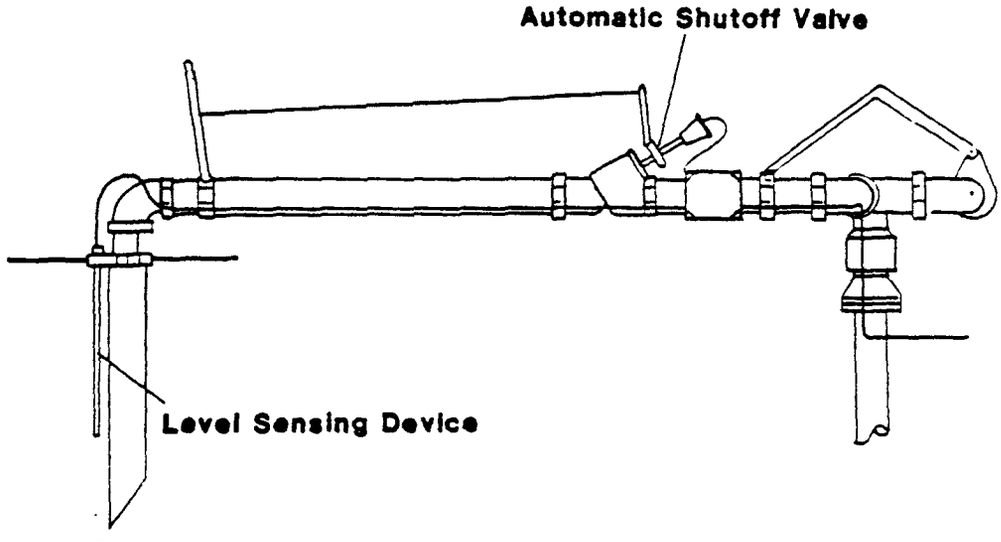

- Level sensing circuit independent of product flow rate, pressure or temperature
- Can be operated electrically or pneumatically

FIGURES ARE FOR ILLUSTRATIVE PURPOSES ONLY. THEY ARE NOT INTENDED FOR USE AS CONSTRUCTION DRAWINGS.

final overflow to the external environment in case the entire system, tank, and emergency overflow tank are filled to capacity. It is advised that this particular overflow point be made visible.

5) MONITORING SYSTEMS

Sometimes the most minor details can seriously interfere with system performance, but system failure can be minimized if the system is monitored on a daily basis for such things as expired batteries, low electrical connections, unplugged inlet cords, etc.

In addition to installing a complete overfill prevention system with the appropriate equipment, some other best management practices should be followed. These are discussed below.

B) Transfer Spill Prevention Systems for Aboveground/ Inground/Onground Tanks.

1) DRY-DISCONNECT COUPLINGS

As addressed in the underground tank section, dry-disconnect couplings should be used on transfer pipes and hoses in place of quick-disconnect couplings or other less reliable means of pipe and hose connections.

2) REDUNDANT VALVING AND INSTRUMENTATION

Because valving and instrumentation can malfunction and lead to disastrous conditions, use of redundant valving and instrumentation is recommended. Redundant valves and instrumentation are an inexpensive way to avoid spills. The primary valve controls should be visible to the overseer, and communication should be maintained with the remote secondary valve control operator during waste loading/unloading.

C) Proper Operating Practices During Loading and Unloading.

1) PROPER TRANSFER PRACTICES

To ensure that proper transfer practices are followed, written instructions should be clearly posted at transfer locations. Periodic personnel training programs are also recommended.

Refer to discussions of underground tanks in Section 9.1(C) of this manual for details on proper liquid transfer practices, which are equally applicable to both underground and aboveground/inground tanks. (Also refer to NFPA 385 for further information on loading and unloading practices.)

2) RECOMMENDED AREAS FOR TRANSFER OPERATIONS

Transfer operations should be conducted only in specifically designated transfer areas that are equipped with impervious surfaces, curbing, and spill-catchment facilities, should any spills occur.

3) INSPECTION AND MAINTENANCE

Regular inspection and maintenance are critical to an efficient transfer spill-prevention system. All of the elements of the system should be inspected on a regular basis and repaired or replaced promptly when damage is detected. Elements that should be inspected include:

- Hoses, piping, fitting, etc.
- Couplings
- Curbs, containment surfaces and catchbasins
- Loading area assemblies
- Pumps and valves
- All control instrumentation
- All tanks and tank vehicles

9.3 UNCOVERED TANKS--FREEBOARD

As Sec. 264.194(b)(3) stipulates, owners and operators of uncovered hazardous waste tanks must allow for maintenance of sufficient freeboard to prevent overlapping by wave or wind action or by precipitation. In a tank of less than 100 meters in diameter, the maximum height of a wind-induced wave is four to five inches. Allowing for another four to five inches for splashing on the sides and up to six inches for any precipitation, 14 to 16 inches of freeboard is considered adequate for most tanks, and 18 inches is considered to provide an even greater safety margin. Although these measurements are in most cases sufficient, in some situations, more or less freeboard may be required.

The above 14-18 inch range for freeboard is usually sufficient but, to be absolutely sure it is recommended that the following formula be used to establish the amount of freeboard required for a given tank system.

$$VR = Qt + V$$

VR = Required Tank Size

V = Volume of Waste to be stored; Gal.

Q = Capacity of System Supplying Waste to the tank; Gal./Min.

t = Required Attendant response time; min.

t = 5 min. for redundant trip system

t = 5 min for diverse trip system

t = 10 min for alarm system only in operation area

t = 15 min for alarm system only in remote area

For open-top tank systems subject to wind action, the amount of freeboard should be determined by the above formula <u>plus</u> the capacity to contain precipitation from a 24-hour, 25-year storm but in no case less than 110% of the quantity of hazardous waste to be stored.* (Indoor open-topped tanks are not subject to these freeboard requirements.)

---

* Information excerpted from study conducted for EPA by Jacobs Engineering, "Practicality of the 2-Foot Freeboard Requirement for Small Diameter Tanks," March 1986.

9.4 SUMMARY OF MAJOR POINTS

This subsection summarizes the information covered in this section and may be used in assuring the completeness of a Part B permit application. It also can be helpful in planning, preparing, and verifying the adequacy of a spill/overfill prevention system.

Does the spill/overfill prevention system include the following elements?

For Underground Tanks

A) Do you have the proper elements for an Overfill Prevention System?

1) Do you have proper sensors for detecting the level of liquid in the tank:

a) Float-activated*
b) Capacitance*
c) Thermal-conductivity*
d) Ultrasonic*
e) Optical*
f) Displacer
g) Hydrostatic-head sensors

2) Are high-level alarms activated when a tank overfill is imminent?

3) Do automatic shutoff devices prevent overfilling from occurring?

4) Is the unloading process tied in with the overfill prevention system to prevent any unloading when the system is non-operative?

5) Does the bypass prevention system ensure that the overfill prevention system cannot be overridden by the operator?

NOTE: *Most applicable to Underground Tanks.

B) Do you have the proper elements of a Transfer Spill-Prevention System?

1) Are couplings equipped with spring-loaded valves which automatically block flow when hoses are disconnected:

- Quick-disconnect couplings
- Dry-disconnect couplings

2) Are emergency shutoff valves installed?.

C) Are appropriate transfer practices followed?

For Aboveground/Inground/Onground Tanks:

A) Do you have the proper elements of an Overfill Prevention System?

1) Do you have proper level sensors and gauges to indicate the liquid level in the tank:

a) Float-activated**
b) Displacer**
c) Hydrostatic-head**
d) Capacitance
e) Thermal-conductivity
f) Ultrasonic
g) Optical

2) Are high-level alarms installed?

3) Do automatic shutdown controls or automatic flow diversion controls prevent overfilling?

4) Are there provisions for emergency overflow to adjacent tanks to collect overflowing materials?

NOTE: **Most applicable in Aboveground/Inground/Onground Tanks.

5) Is the system monitored daily by a reliable individual?

B) Do you have the proper elements of a Transfer Spill-Prevention System?

1) Are hazardous wastes transferred at established stations equipped with curbing, paving, and catchment facilities?

2) As with underground systems, are dry-disconnect couplings used on transfer pipes and hoses?

3) Are redundant valves and instrumentation installed?

C) Are appropriate transfer practices being followed?

In addition, see Appendix A, "Completeness Checklist," to verify compliance with the requirements of this section.

10.0 INSPECTIONS

Tank systems must be properly inspected on a routine basis to minimize the probability of accidental releases of hazardous wastes to the environment. Inspections also aid in reducing the risks of fire and exposure resulting from hazardous releases and in maintaining safe working conditions in and around the storage area. Regular inspections using appropriate and effective procedures are the most reliable mechanisms available for forecasting the potential for tank system failure and secondary containment system failure. Most effective inspection programs will identify excessive corrosion or erosion, deterioration of liners and appurtenances, cracking of welds and joints, cracking of concrete tanks and secondary containment systems, structural fatigue evidenced by cracking of metals, and leakage from pumps, valves, or piping. Particular attention should be given to bottom-to-shell connections, -flanges, rivet holes, welded seams, valves, nozzles, pumps, pump-sets, bypass piping and welded brackets.

The frequency of inspections depends on the likelihood of tank system failure and on the severity of the threat to human health and the environment presented by a potential leak caused by that failure. An inspection program must, at the very least, according to Sec. 264.195 ("Inspections"), consist of daily visual inspections of critical components and leak detection data. The secondary containment system must also be inspected at least daily, since it is the last barrier between a leak and the soil, ground water, or surface water. Cathodic-protection systems must also be inspected regularly, since they provide protection against corrosion when working properly and may also hasten corrosion if not functioning according to specifications. Early detection and replacement, adjustment, or repair of faulty equipment can prevent catastrophic leakage. Tank systems may be inspected externally and internally but, since the tank systems are usually in continuous service, external inspections can be carried out more readily and frequently.

Until such time as secondary containment which meets the regulations is installed, all tank systems must be inspected in accordance with the requirements of Sec. 264.193(i). For underground tanks which are non-enterable, a leak test that meets the requirements of Sec. 264.191(a) or other tank integrity method as approved or required by the (EPA) Regional Administrator must be conducted annually. [§264.191(b) stipulates that the leak test that is employed must be capable of taking into 'account the effects of temperature variations, tank end deflection, vapor pockets, and high water table effects.'] For other than non-enterable tanks, a schedule and procedure must be developed and approved by the EPA Regional Administrator for assessing the overall condition of the tank system. For ancillary equipment, a leak test or other assessment must be performed annually.

General

Information on inspection schedules must be included in Part B of the permit application, as specified in:

> Sec. 270.14(b)(5) A copy of the general inspection schedule required by Sec. 264.15(b); Include where applicable as part of the inspection schedule, specific requirements in Sec. 264.195 for tanks.

For the purposes of this technical resource document, only specific inspection requirements for hazardous waste tank systems will be addressed. See the "Permit Applicant's Guidance Manual for the General Facility Standards of 40 CFR 264," Section 5.5, for information on general inspection requirements.

The following sub-sections address the inspection requirements of the regulations and give details on the methods and frequency of equipment inspections. In general, most of this chapter addresses metal tank conditions. Fiberglass-reinforced plastic (FRP) tanks often fail by different mechanisms of deterioration than metal tanks. Sub-section 10.6 includes specific FRP tank inspection information, and sub-section 10.7 discusses concrete tanks.

Any hazardous waste facility that uses tanks to treat or store hazardous waste must, in addition to the general inspection requirements of Sec. 264.15,

comply with the specific inspection requirements of Secs. 264.195 and 264.193(i) (see Tables 10-1 and 10-2). These inspection requirements will be discussed individually in the following sub-sections. Sections 10.1 through 10.4 pertain to the regulations for inspection after full secondary containment is provided, and section 10.5 pertains to the period of time from the effective date of the regulations until the time when full secondary containment is provided.

10.1 SCHEDULE AND PROCEDURES FOR OVERFILL CONTROL SYSTEM INSPECTIONS

Part B of the permit application must include a schedule and procedure for inspecting overfill control systems and monitoring equipment in all tanks:

Citation

> Sec. 264.195(a) The owner or operator of a tank system must develop a schedule and procedure for inspecting overfill controls, where present (e.g., level-sensing devices, high-level alarms, waste-feed cutoff and bypass systems).

Guidance for complying with this regulatory requirement is discussed below.

Guidance

Important overfill controls and instruments include:

- Flow-rate controls
- Level controls
- Temperature gauges
- Pressure gauges
- Control valves
- Alarms and emergency shutoff devices
- Analyzers

TABLE 10-1

INSPECTION REQUIREMENTS

BEFORE FULL SECONDARY CONTAINMENT IS PROVIDED

Regulation Section	Inspection Requirement	Time Frame
264.193(i)(1)	For underground, non-enterable tanks, one of the following: - a leak test that meets the requirements of Sec. 264.191(a) or - other method as approved or required by the EPA Regional Administrator	Annually
264.193(i)(2)	For other than non-enterable, underground tanks, a procedure to: - conduct a leak test that meets requirements in Sec. 264.191(a) - assess the overall condition of the tank system as approved by an independent, qualified, registered professional engineer	A schedule to be approved by the EPA Regional Administrator
264.193(i)(3)	For ancillary equipment - A leak test or other integrity assessment as approved by the Regional Administrator	Annually
264.193(i)(4)	A record of the results of all the above assessments must be maintained on file at the facility.	
264.193(i)(5)	Tank systems found to be leaking or unfit for use as a result of the leak test or assessments in this section must comply with the Sec. 264.196 requirements - "Response to leaks or spills and disposition of leaking or unfit for use tank systems."	

TABLE 10-2

INSPECTION REQUIREMENTS

AFTER FULL SECONDARY CONTAINMENT IS PROVIDED

Regulation Section	Inspection Requirement	Time Frame
264.195(a)	Overfill controls	Develop schedule and procedures
264.195(b)(1) & (2)	Visual inspection of aboveground portions of the tank - corrosion or releases from fixtures, joints, flanges, pumps, valves, and seams - monitoring and leak-detection data (pressure or temperature gauges, monitoring wells, and leak-detection devices)	Daily
264.195(b)(3)	Externally accessible portion of the tank and secondary containment system - construction materials - surrounding area to detect erosion or signs of releases (e.g., wet spots, dead vegetation)	Daily
264.195(c)(1)	Proper operation of cathodic protection system	Within six months of initial installation and annually thereafter
264.195(c)(2)	Sources of impressed current	Bi-monthly

A brief checklist of what should be inspected includes:

- Transmission systems
- Power supplies
- Seals
- Purges
- Panels and enclosures
- Electrical equipment
- Insulation
- Enclosures
- Operating Mechanisms
- Insulating and lubricating oils
- Protective overlays
- Bearings
- Batteries
- Rectifiers

In most cases, instruments and controls are visually inspected daily by the operator, since they are an integral part of the daily operation of the facility. Any unexpected discontinuities or abnormal peaks in data charts or data logs may indicate that there is some cause for concern. All instrumentation and control equipment should be thoroughly inspected according to the manufacturers' recommended frequency and methodology.

Environmental conditions, such as heat, moisture, chemical attack, and dirt, are responsible for deterioration of electrical systems. The inspector should specifically look for these deteriorating effects.

10.2 DAILY INSPECTIONS OF ABOVEGROUND PORTIONS OF TANK SYSTEMS AND MONITORING AND LEAK DETECTION DATA

Citation

Sec. 264.195(b) the owner or operator must inspect at least once each operating day: (1) the aboveground portions of the tank system, if

any, to detect corrosion or releases of waste; and (2) data gathered from continuous monitoring and leak detection equipment, if any (e.g., pressure or temperature gauges, monitoring wells) to ensure that the tank system is being operated according to its design.

Guidance

Daily inspection of the aboveground portions of the tank system for corrosion or leaks from tank fixtures, joints, flanges, pumps, valves, and seams and daily inspection of data from leak-detection systems must be standard operating procedure for tank system owners and operators.

Gross leakage or corrosion from fixtures and seams will be readily evident. This is the primary purpose of a daily visual inspection, which is required to detect deteriorating areas before they create serious problems. Stress corrosion around weld seams, joints, and fixtures may occur on the surface of the tank. Careful daily inspection of aboveground portions for corrosion will usually allow detection of potential defects, which then will require further detailed examination. Visual inspections are usually sufficient to locate major corroded areas on aboveground portions of the tank.

In addition to daily inspection for corrosion, the aboveground portions of the tank shell should be inspected for leaks, cracks, buckles, and bulges. Discoloration of paint may be an indication of leakage.

Cracks can be found at nozzle connections, in welded seams, and underneath rivets. Cracks, buckles, and bulges can initially be spotted by visual inspection, and their extent can be more thoroughly determined by techniques like the magnetic-particle, penetrant-dye or vacuum box methods (see Section 10.8, "Inspection Tools and Electromechanical Equipment," for details on inspection devices).

All valves in the tank system should be visually inspected to ensure that the seating surfaces are in good condition. Specific guidance is given below.

A) Valves, Pipes, Fittings, and Hoses.

Inspection of valves, pipes, fittings, and hoses is critical to detect losses in metal thickness owing to external or internal deterioration. In many cases high liquid turbulence or velocity causes these equipment parts to erode or wear. Leaks are most likely to occur around pipe bends, elbows, tees, and other restrictions, such as orifice plates and throttling valves. Loading and/or unloading hoses used as flexible connections between vehicles and storage tanks are vulnerable to wear and tear as well. Traffic passing over hoses during loading and unloading can also contribute considerably to hose deterioration.

Visual inspection while the tank is in operation should include checking the following:

- leaks
- misalignment of pump shafts
- unsound piping supports
- vibration or swaying
- indications of pipe fouling (causing flow restrictions)
- external corrosion
- accumulations of liquids

Specific areas that should be checked for the above conditions include:

- pipe bends
- elbows
- tees
- orifice plates
- throttling valves
- loading/unloading hoses
- pumps

Ultrasonic or radioactive testing techniques can be employed as an additional aid to measure metal thickness while the tanks are in

operation. (See Section 10.8, "Inspection Tools and Electromechanical Equipment," for details on these testing techniques.)

Pipe connections in tank systems must be inspected for external corrosion by visual examination, scraping, and picking. Piping should be scraped and cleaned during visual inspection. When the tank has shown evidence of excessive settling, piping connections that might have been loosened should be carefully checked.

Film lifting of the tank's protective coating is prevalent below seam leaks and is best detected, as are rust spots and blisters, by visual inspection, aided by scraping the film in suspected areas where necessary. Special attention should be paid to paint blisters, which are usually prevalent on the roof and the sunny side of the tank.

B) Pumps and Compressors.

Although mechanical wear is the primary cause of deterioration for pumping and compression equipment, erosion and corrosion can also be contributing factors. Improper operating conditions, piping stresses, cavitation, and foundation deterioration causing misalignment have been known to contribute to deterioration.

Routine visual inspections of pumps and compressors should look for the following:

- foundation cracks and uneven settling
- leaky pump seals
- missing anchor bolts
- leaky piping connections
- excessive corrosion
- excessive vibrations and noise
- deterioration of insulation
- excessive dirt
- a burning odor or smoke

- o missing safety equipment such as a pump-coupling guard
- o depleted lubrication oil reservoir

Vibration has been known to deteriorate a pump or compressor rapidly; therefore, periodic inspection of the vibration level should be conducted by using an electronic-vibration meter. All assembly bolts, gaskets, cover plates, and flanges should be inspected as well to detect leaks and cracks.

When a pump or compressor is taken out of use, the mechanical components should be checked for clearance, corrosion, erosion, deformation, wear, and any other changes detrimental to safe operation.

C) Heat Exchangers.

Deterioration may be expected on all surfaces of exchangers and condensers that contact chemicals, water (both salt and fresh), and steam. The form of attack may be electrochemical, chemical, mechanical, or a combination of the three types. The attack may be further accelerated by factors like temperature, stress, fatigue, vibration, impingement, and high-flow velocity.

The exchanger or condenser itself can be visually inspected for rust spots and blisters. If a unit is out of use, inspection procedures can be more detailed. A scraper and a ball-peen hammer can be used in conjunction with a visual inspection to detect areas subject to excessive erosion and corrosion. A pressure test using a test fluid can also be used to detect leaks or excessive erosion or pitting, if a more detailed investigation is thought necessary to confirm the results of the visual inspection.

D) Vapor-Control Systems.

Vapor control systems are most commonly used in tanks that hold liquids with a high coefficient of expansion.

Areas of inspection should include:

- The pressure-release valve, which should be examined for clear lines.
- The bladder-height gauge, which should be inspected for proper working condition.
- The area between the bladder and shell should be checked with an explosimeter for detection of vapor leaks.
- The cycling schedule should be monitored to determine if the system is in proper operating condition.

The bladder-height gauge and the pressure-release valve are usually located on the roof of the holding tank.

10.3 DAILY INSPECTION OF CONSTRUCTION MATERIALS, LOCAL AREAS, AND SECONDARY CONTAINMENT SYSTEM FOR EROSION AND LEAKAGE

Citation

Sec. 264.195(b)(3) The owner or operator must inspect on at least a daily basis the construction materials of, and the area immediately surrounding, the externally accessible portion of the tank system, including the secondary containment system (e.g., dikes) to detect erosion or signs of release of hazardous waste (e.g., wet spots, dead vegetation).

Guidance

Section 264.195(b)(3) requires daily inspection of the construction materials and the area immediately surrounding the external portion of the tank system and the secondary containment system for signs of erosion or releases. This daily inspection is intended primarily to detect releases or the potential for imminent releases and should include the following items:

- Releases or corrosion around nozzles and ancillary equipment of the tank system;
- Signs of corrosion on tank tops or roofs;
- Defective manhead gaskets
- Corrosion or releases, cracks, and buckles on seams and plates of the tank wall and bottom;
- Possible erosion around the foundation, pads, and secondary containment, if any; and
- Deterioration of protective coatings as indicated by corrosion, blisters, discoloration, or film lifting.

Visual inspection, picking, scraping, and hammering are efficient procedures for locating major corroded areas on aboveground portions of the tank. Leak-testing devices, such as ultrasonic or vacuum devices, may be used as aids to visual inspection, if necessary. (See Section 10.8 of this text for details on these inspection devices.)

Concrete curbing around the base of the foundation and foundation ringwalls should be inspected for signs of deterioration. Cracks or decay should be repaired promptly to maintain structural integrity and to prevent liquids from collecting under the tank. Concrete pads, base rings, piers, column legs, stands, and any other general support structures should be visually examined for cracks and spalling. Such deterioration can also be uncovered by scraping the suspected areas. The joint between the tank bottom and the concrete pad or base ring may have a seal for stopping water seepage. If so, this should also be inspected for corrosion. Wooden supports for tanks should be checked for rotting by hammering. Anchor bolts can also be checked for structural integrity and tightness by hammering. Excessive foundation settlement is typically indicated by distortion of anchor bolts,

buckling of columns, and excessive concrete cracking. Welds along the angle iron at the intersection of the shell and tank bottom should be inspected for deterioration as well. (See Figure 10-1.)

Secondary containmnet structures, including liners, vaults and double-walled tanks or other approved structures should be regularly inspected for signs of structural integrity, and erosion or corrosion. Many of the guidelines followed in inspecting concrete foundations as mentioned above can be applied to inspecting concrete vaults. Be particularly careful when looking for cracks as concrete vaults are subject to cracking when exposed to freeze/thaw cycles.

There are particular properties associated with clay and polymeric liners that the inspector should be aware of when conducting an inspection. Clay liners are subject to the following:

(1) drying and cracking;

(2) leaching of components when exposed to groundwater or other solutions;

(3) ion exchange when exposed to water containind acids, alkalis or dissolved salts; and

(4) destabilization when exposed to some organic solvants.

Polymeric liners are subject to:

(1) risk of puncture;

(2) damage from vehicular traffic;

(3) attack by sunlight and ozone;

(4) attack by hydrocarbon solvents particularly those with high aromatic content.

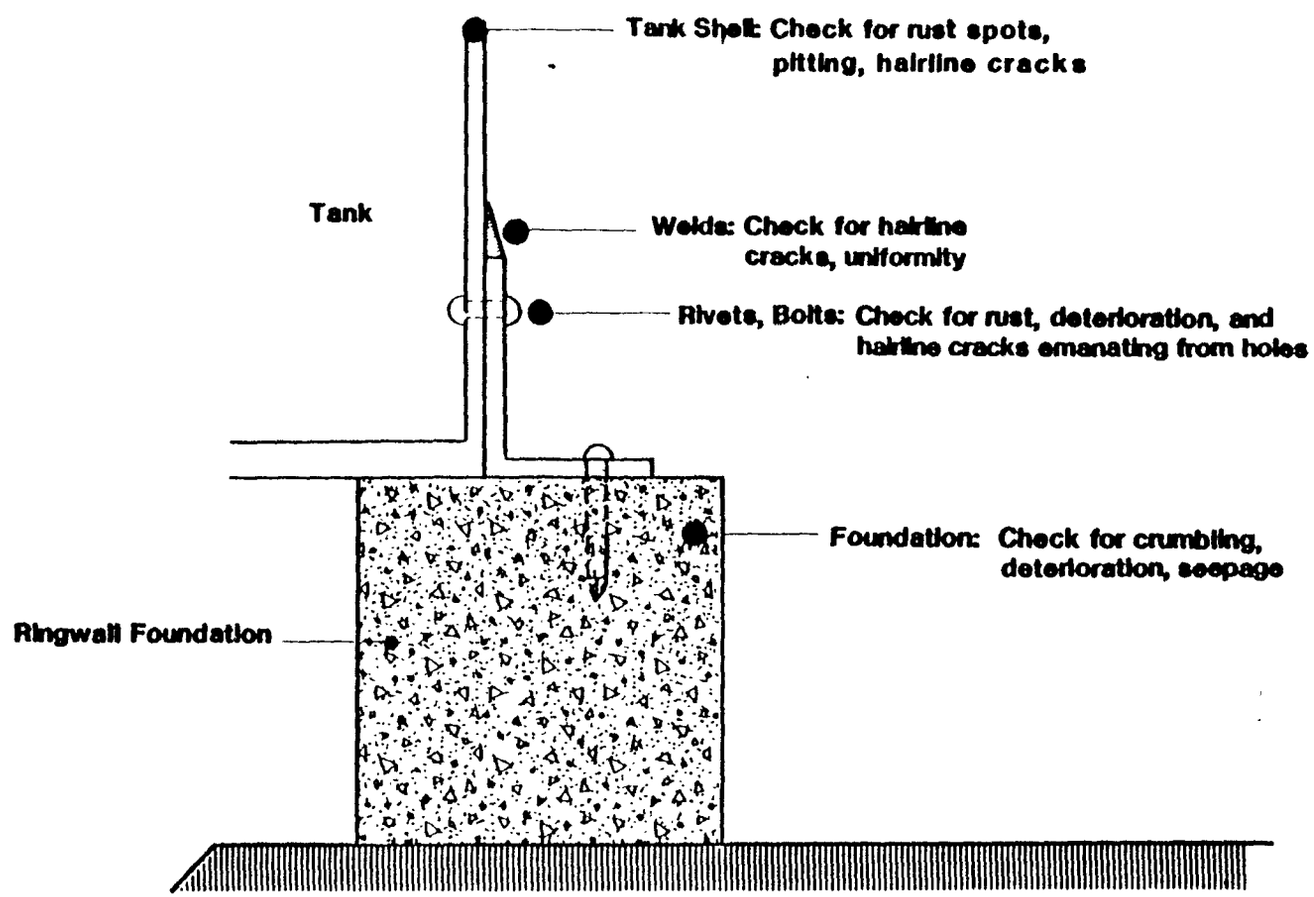

Figure 10-1

Areas of Concern in a Typical Tank Foundation

10.4 INSPECTION OF CATHODIC-PROTECTION SYSTEMS

Citation

Sec. 264.195(c) The owner or operator must inspect cathodic protection systems, if present, according to, at a minimum, the following schedule to ensure that they are functioning properly:

(1) The proper operation of the cathodic protection system must be confirmed within six months after initial installation and annually thereafter; and

(2) All sources of impressed current must be inspected and/or tested, as appropriate, at least bimonthly (i.e., every other month).

Guidance

Storage systems equipped with cathodic-protection systems require periodic inspection if they are to ensure long-term protection that they were designed to provide. Conditions that affect protection are subject to change with time, and corresponding modifications/adjustments may be required in the cathodic-protection system. For instance, changes in soil resistivity, moisture content, seasonal changes etc . . . all impact the effectiveness of cathodic protection output. An impressed current cathodic protection system is designed to operate at a set voltage and amperage output based on observed soil condition at time of installation. If soil conditions change substantially, cathodic protection output should be altered as well to provide adequate protection. (Short term changes in soil are not significant, but, any long term, substantial change should be conpensated for in voltage/amperage output.) Conditions may exist where operating experience has indicated that testing and inspections should be conducted more frequently than required herein. [The practices described in the National Association of Corrosion Engineers' (NACE) standard, "Recommendation Practice (RP-02-85)--Control of External Corrosion on Metallic Buried, Partially Buried, or Submerged Liquid Storage System," and the American Petroleum Institute's (API) Publication 1632, "Cathodic Protection of Underground Petroleum Storage Tanks and Piping Systems," may be used, where applicable, as guidelines in maintaining and inspecting cathodic protection systems.]

A) Cathodic-Protection Systems.

Section 264.195(c)(1) requires, at minimum, that an inspection be conducted of the proper operation of the cathodic-protection system within six months of initial installation and annually thereafter. To confirm proper operation, the system and component checks discussed below should be helpful. Cathodic systems should be checked for electrical continuity and for failure which may be caused by broken wires, broken or shorted insulators, or loss of coatings.

Tank structure-to-soil potential measurements should be conducted at least annually by a corrosion expert to ensure a minimum level of -0.85 volts. Tank structure-to-soil potential measurements are usually performed by measuring the voltage between the tank or piping surface and a saturated copper-copper sulfate reference electrode located on the electrolytic surface (soil) as close as possible to the storage system.

A zinc reference electrode, or a test station, should be installed to a depth halfway between the top and bottom of the tank, and midway between tanks, if in a multiple-tank field. This installation provides convenient test positions to measure tank structure-to-soil potentials.

If the structure-to-soil potential measurements are not within specifications, the corrosion expert should define the corrective action to be taken.

B) Inspection of Impressed-Current Systems.

As a particular type of cathodic-protection system, impressed-current anodes are usually composed of such materials as graphite, high-silicon cast iron, platinum, magnetite, or steel. These anodes are installed either bare or in special backfill material. They are connected by an insulated conductor, either singly or in groups, to the positive terminal of a direct current source. They are dynamic systems requiring close supervision and maintenance oversight.

Impressed-current electrode systems require inspection to detect potential malfunction from power interruption, improper operation of rectifiers, damage to insulation, deterioration of anodes, bonding discontinuity, or broken wires. One simple, necessary inspection that may be conducted by operating personnel is to check monthly, or more often, the timing device that controls the rectifier to make sure that there has been continuous output from the impressed-current system. Rectifier output must be monitored bimonthly with a voltage or amperage indicator and adjusted as needed. The readings may be taken by trained operating personnel, but any adjustments should be made by a manufacturer's representative. Internal connections should be checked for mechanical security, and structure-to-soil potential measurements should be made annually to determine if rectifier adjustments are needed to maintain adequate corrosion protection. These tests should be made by a manufacturer's representative and not by operating personnel.

All sources of impressed-current systems should be inspected for malfunction. The National Association of Corrosion Engineers (NACE) stipulates that proper functioning may be indicated by current output, a signal indicating a normal operating, satisfactory electrical state of the protected structure, or normal power consumption. NACE recommends the inspection include: checking for electrical shorts, ground connection, circuit resistance, and meter accuracy and efficiency. Isolating devices, continuity bonds, and insulators should also be evaluated by on-site inspection or by evaluating corrosion test data. NACE also recommends the following:

-- When the structure being protected is not covered, it should be examined for corrosion, and, if coated, the condition of the coating should be assessed.

-- The condition of test equipment for obtaining electrical values should be maintained and checked annually for accuracy.

For further information on remedial action procedures when test and inspection criteria indicate that protection is no longer adequate, see NACE Publications RP-02-85, "Control of External Corrosion of Metallic Buried, Partially Buried, or Submerged Liquid Storage Systems" and RP-01-69 "Control of External Corrosion on Underground or Submerged Metallic Piping Systems."

10.5 INSPECTION REQUIREMENTS BEFORE FULL SECONDARY CONTAINMENT IS PROVIDED

Citation

Sec. 264.193(i) All tank systems, until such time as secondary containment that meets the requirements of this section is provided, must comply with the following:

(1) For non-enterable underground tanks, a leak test that meets the requirements of Sec. 264.19(a) or other tank integrity method, as approved or required by the Regional Administrator, must be conducted at least annually.

(2) For other than non-enterable underground tanks, the owner or operator must either (i) conduct a leak test as in paragraph (i)(1) or (ii) of this section develop a schedule and procedure for an assessment of the overall condition of the tank system by an independent, qualified registered professional engineer. The schedule and procedure must be adequate to detect obvious cracks, leaks, and corrosion or erosion that may lead to cracks and leaks. The owner or operator must remove the stored waste from the tank, if neccessary, to allow the condition of all internal tank surfaces to be assessed. The frequency of these assessments must be based on the material of construction of the tank and its ancillary equipment, the age of the system, the type of corrosion or erosion protection used, the rate of corrosion or erosion observed during the previous inspection, and the characteristics of the waste being stored or treated.

(3) For ancillary equipment, a leak test or other integrity assessment as approved by the Regional Administrator must be conducted at least annually.

(4) The owner or operator must maintain on file at the facility a record of the results of the assessments conducted in accordance with paragraphs (i)(1) through (i)(3) of this section.

(5) If a tank system or component is found to be leaking or unfit for use as a result of the leak test or assessment in paragraphs (i)(1) through (i)(3) of this section, the owner or operator must comply with the requirements of Sec. 264.196.

Guidance

The EPA believes that it is important to assess the integrity of hazardous waste tank systems during the phase-in of secondary containment. Accordingly, temporary inspection procedures have been defined in Sec. 264.193(i) for all tank systems until secondary containment can be provided. The regulations require that periodic integrity assessments be conducted for all such hazardous waste tank systems . For non-enterable underground tanks, the regulations require a leak test that meets the requirements of Sec. 264.191(a) or other tank integrity method, as approved or required by the Regional Administrator, which must be conducted at least annually. Ancillary equipment must likewise have an annual leak test or integrity assessment.

A schedule and procedure must be developed during the permitting process for assessing the overall condition for permitted tanks other than non-enterable underground tanks. An internal inspection or other tank integrity examination that addresses cracks, leaks, corrosion, and erosion must be performed at least annually for tanks other than non-enterable underground tanks. [See Section 4.0 for further details on assessment of a tank systems integrity.]

The EPA is currently investigating tank tightness testing techniques and may provide additional guidance on the testing of non-enterable tanks in the future. For other than non-enterable underground tanks, the guidance for inspection is covered in this section.

For additional guidance in assessing the overall condition of the tank system, the American Petroleum Institute's (API) Publication Guide for Inspection of Refinery Equipment, Chapter XIII, "Atmospheric and Low-Pressure Storage Tanks," 4th Edition, 1981, may be used, where applicable, as guidelines for assessing the overall condition of the tank system. (Refer to Table 10-1 for inspection requirements that are required before full secondary containment is provided.)

10.6 FIBERGLASS-REINFORCED PLASTIC (FRP) TANKS

Corrosion is the major cause of failure in metal tanks. FRP tanks, however, are more likely to fail due to reaction, softening, swelling, or cracking than from corrosion.

Aboveground reinforced plastic tanks should be inspected for cracking due to bending, curving, or flexing after delivery and throughout the service of the tank. Excess pressure can result in structural failure, evidenced by interior longitudinal cracking in horizontal tanks and by vertical cracking in vertical tanks. The dye-penetrant testing method can be used to investigate suspected cracks.

As for all tanks, the metal appurtenances of a fiberglass or epoxy tank should be inspected according to the same schedule as discussed in Sec. 264.195 ("Inspections"). These metal parts may corrode or break and must be inspected.

10.7 CONCRETE TANKS

Leakage control is of major importance in such tanks. The following factors may cause concrete tanks to leak:

- Concrete permeability which allows the passage of water;
- Concrete cracks;
- Construction joint cracks and defects;
- Chemical attack.

Cracks in concrete do not typically lead to structural failure. However, cracks in addition to voids in concrete structures can induce leakage in a concrete tank.

Cracks in aboveground, onground and inground tanks can be detected by visual inspection.

Extent of cracking can be made more obvious by spraying the tank with water. When the overall surface has dried the cracks will be more prominent.

Temperature changes can also expand and contract concrete creating stresses in the concrete, possibly leading to cracking.

Factors that affect the durability of concrete include:

- Freezing and thawing;
- Chemical attack;
- Abrasion;
- Corrosion of reinforcement;
- Chemical reaction of concrete aggregate.

For the purposes of inspection of hazardous waste concrete tanks, chemical attack is the most prominent of the mentioned effects. All others can be prevented for the most part.

In summary: when conducting inspections and determining inspection frequencies for concrete tanks, several characteristics of concrete must be considered:

- Concrete is susceptible to freeze-thaw cracking and deterioration if not properly air entrained;

- If not made with sulfate-resistant cement, concrete is subject to attack by nearly all sulfate salts;

- Concrete is susceptible to attack by many chemicals including alum, chlorine, ferric chloride, sodium bisulphate, sulfuric acid, and sodium hydroxide; (most prevalent condition);

- Concrete may be permeable to some liquids.

The American Concrete Institute's (ACI) Manual of Concrete Inspection includes information on inspection fundamentals, testing of materials, sampling, and inspection before, during, and after construction.

10.8 INSPECTION TOOLS AND ELECTROMECHANICAL EQUIPMENT

When visual inspection suggests the need for a more detailed investigation, simple hand tools may be used as an initial aid. Scrapers, diggers, or flange spreaders are often adequate for these purposes. Hammers, mirrors, magnifiers, magnets, and plumbing tools may also be helpful. When the inspection indicates that more sophisticated equipment is needed to assess a suspected problem, mechanical measuring tools or electrical devices may be used. Mechanical measuring tools include measuring tapes, scales, micrometers, calipers, and wire gauges. Useful devices include ultrasonic and electromagnetic instruments, which provide nondestructive means of determining wall thickness.

Chemical examination and destructive test methods may be employed, as well, to evaluate performance of storage system components. Destructive test usually refers to cutting coupons (small plate sections) out of the tank base to test for corrosion on the underside of the tank bottom. Destructive tests are most often used with empty, aboveground tanks. They are not commonly used with underground tanks.

The selection of a particular test method depends on the type of tank to be inspected, the extent of the inspection, and the equipment available. Several of the most common, advanced inspection methods are described below.

Penetrant dyes are often used to detect surface cracks on the outside of a tank that would not be revealed by a visual inspection. The penetrant is applied to a cleaned and dried surface by either brushing or spraying. After a few minutes of contact, a chemical developer is then sprayed onto the surface to give a white appearance when dyed. The dye stains the developer and reveals the extent and size of any defects.

The magnetic particle method is also used to define surface cracks on a tank. This method may be used only on tanks constructed of magnetic materials. The tank surface must be carefully cleaned. Iron particles are then sprinkled on the surface. A magnetic field is imposed near the particles, either by a permanent magnet (especially if flammable materials are stored nearby) or an electromagnetic device. The iron particles then arrange themselves along surface cracks, particularly near the ends of cracks. The magnetic field should be imposed in two directions to ensure that there are no cracks or to identify two or more cracks running in different directions. No indication is given about the depth of cracks using this method.

The vacuum box detects air leaks using an open box in which the lips of the open side are covered with a sponge-rubber gasket, and the opposite side is glass. A vacuum gauge and air siphon connection are installed inside the box. The seam of a tank shell is first wetted with a soap solution, then the vacuum box is pressed tightly over the seam. The foam-rubber gasket forms a seal, and a vacuum is achieved inside the box by the air siphon. If any leak exists, bubbles will form inside the box and can be seen through the glass.

Ultrasonic instruments can be used to measure a tank's thickness and determine the location, size, and nature of defects. These instruments can be used while the tank is in operation, as only the outside of the tank needs to be connected to the device. Two types of ultrasonic instruments, the resonance and the pulse type, are most commonly used for tanks. The pulse type utilizes electric pulses and transforms them into pulses of ultrasonic waves. The waves travel through metal until they reach a reflecting surface. The waves then are reflected back and converted to electrical pulses that show up on a time-base line of an oscilloscope. The instrument is calibrated using a material of known thickness; therefore, the time interval between pulses corresponds to a certain thickness.

Radiography is used to detect flaws, such as cracks, and voids, in opaque (solid) materials. Radiography may also be employed in determining wall thickness, product build-up, blockage, and the condition of internal equipment

like trays, valve parts, and thermowells. The radiographic technique uses either X-rays or gamma radiation. The X-ray is produced in a tube within an X-ray machine; the gamma ray is produced from a radioactive material contained in a small capsule.

Radiography testing can only be conducted by qualified radiographers. Specific precautions must be taken when there is the possibility of exposure to X-rays or gamma rays. Training and experience are required to correctly interpret the images produced on radiographic film.

Other radiation-type instruments, such as portable gamma ray instruments, may also be used to study materials for defects. These instruments are particularly adaptable for the evaluation of piping and, to a lesser extent, vessel-wall thicknesses. As mentioned, considerable experience is required to operate radiation-type instruments proficiently and safely.

Acoustic emissions testing employs piezoelectric transducers to monitor the acoustic emissions given off by a material during corrosion or disbonding. Essentially, this technique involves "listening" to detect the pressure of corrosion or other stressful situations in a structure.

Acoustic emission testing may be applied before a structure is put into use, while it is in use, or after it is removed from service. It may be applied to the entirety of a structure or to an individual section of a structure. Testing may be conducted continuously for the purpose of monitoring the structure over a specified time period to determine its structural or material integrity then.

Acoustic emissions testing can be used for the following purposes:

- detection and location of flaws in structures
- leak detection and location
- corrosion detection and location
- real-time detection and location of flaws during welding operations

Acoustic emissions testing has several advantages, and as already mentioned, it has numerous applications. The test method is non-destructive, lessening the inconvenience/disruption of testing. It is a highly sensitive test and detects very small discontinuities. Also, it is a volumetric test, so both surface and sub-surface discontinuities can be detected.

This testing method has several disadvantages as well. Although only limited access to the item being tested is required, access is required no less. This makes testing of existing underground tanks and piping quite difficult. Testing requires an operator with a high degree of skill. Acoustic emissions equipment is more sophisticated and more expensive than other non-destructive testing equipment. Testing equipment and skilled operators are not always readily available.*

10.9 REPORTING REQUIREMENTS

Citation

Sec. 264.195(d) The owner or operator must document in the operating record of the facility an inspection of those items in paragraphs (a) through (c) of this section.

Guidance

The EPA believes it is important for owners and operators of tank system facilities subject to these requirements to keep a permanent record of their inspections. This provides documentation of owner/operator compliance with the required inspections of the rule.

10.10 SUMMARY OF MAJOR POINTS

The following questions highlight the information covered in this section and should be used to assure the completeness of a Part B permit application:

* Information excerpted from study conducted for EPA by Jacobs Engineering, "Acoustic Emission Testing," March 20, 1986.

- Have schedules and procedures been developed for inspecting overfill controls?

- Have the following items been inspected at least once each operating day:

  - the aboveground portions of the tank system to detect corrosion or leaking of waste?

  - data from continuous monitoring and leak-detection equipment?

  - the construction materials of the externally accessible portion of the tank system?

  - the construction materials of the externally accessible portion of the secondary containment system?

  - the area surrounding the tank system and its secondary containment to detect erosion or signs of leakage?

- Has the owner or operator inspected all cathodic-protection systems at least as often as the following:

  - within six months of initial installation and annually thereafter, the proper operation of all cathodic-protection systems?

  - bimonthly, (i.e., once every two months) all sources of impressed current?

- For non-enterable underground tanks, if secondary containment that meets the requirements of the regulations has not been provided, has

a leak test that meets the requirements of Sec. 264.191(a) or other tank integrity method approved or required by the Regional Administrator been conducted annually?

- For other than non-enterable underground tanks, has an approved procedure, adequate to detect obvious cracks, leaks, and corrosion and erosion, been implemented on an approved schedule?

- For ancillary equipment, has a leak test or other assessment been conducted annually?

In addition, see Appendix A, "Completeness Checklist," to verify compliance with the requirements of this section.

11.0 RESPONSE TO LEAKS OR SPILLS AND DISPOSITION OF LEAKING OR UNFIT-FOR-USE TANK SYSTEMS

If a leak or spill from a tank system is detected or if a portion or all of a tank system is found to be unfit-for-use, the response procedures in Sec. 264.196 must be implemented. These procedures apply even if a release has been contained by a tank system's secondary containment, except for the notification and report requirements of Sec. 264.196(d). The response procedures of Sec. 264.196 differ somewhat from the procedures for releases from tank systems that have been granted technology-based variances by the EPA Regional Administrator from the Sec. 264.193 secondary containment requirements. The necessary response procedures for leaking tank systems that have been granted technology-based variances are cited in Sec. 264.193(g)(3-4) and are elaborated upon in Section 8.1 of this document.

The specific requirements of Sec. 264.196 are intended to supplement the contingency plan emergency response procedures required by 40 CFR Part 264, Subpart D. The contingency plan must be submitted by the owner or operator of a tank system as part of a Part B permit application.

Section 264.196 does not contain, however, explicit corrective action requirements pertaining to any environmental contamination that has occurred from tank system leaks or spills. Once notified that there is or has been a release of hazardous waste into the environment, as required under Sec. 264.196(d), the Regional Administrator may require particular corrective actions under RCRA Section 3004(u), 3008(h), or 7003(a) to protect human health or the environment. The EPA is currently developing a number of general technical resource documents on corrective action technologies that will address remediation of environmental contamination. The EPA Office of Underground Storage Tanks is developing a technical resource document specifically on underground storage tank corrective action technology under U.S. EPA Contract No. 68-02-3995.

A tank system owner or operator is also required to notify the National Response Center for certain "reportable quantity" releases under 40 CFR Part 302, which will also satisfy the notification requirement of Sec. 264.196(d).

Citations

Sec. 264.196 A tank system or secondary containment system from which there has been a leak or spill, or which is unfit-for-use, must be removed from service immediately, and the owner or operator must satisfy the following requirements:

(a) Cessation of Use; prevent flow or addition of wastes

(b) Removal of waste from tank system or secondary containment systems

(c) Containment of visible releases to the environment

(d) Notifications, reports

(e) Provision of secondary containment, repair, or closure.

(f) Certification of major repairs.

Guidance

Section 5.7 of the "Permit Applicant's Guidance Manual for the General Facility Standards" contains procedural requirements for implementing remedial actions in the event of spills, leaks, or other unintended releases of waste from a tank storage system. Tank system owners or operators must initiate prompt, effective action to contain, recover, mitigate, and remedy any release that poses a threat to human health or the environment.

The contingency plan required under Subpart D of Part 264 describes procedures for responding to spills or leaks. It must include the schedule and procedures for removal of leaked or spilled waste; removal of waste from secondary containment systems, where applicable; and measures for minimizing any further releases.

The intent of Sec. 264.196 is to supplement a facility's contingency plan by minimizing the immediate effects of a detected release or potential release from a tank system and preventing and containing any potential future releases from such a system. To accomplish these goals, the following steps must be undertaken in a timely manner by a tank system owner or operator when a leak or spill is detected or anticipated:

- Immediately cease flow of waste into the tank system. Isolate any leaking tank system component from the non-leaking portions of the system. At this time, the cause of the release may be apparent from inspection of the system (Sec. 11.1.).

- Remove any waste that may leak from the tank system (from the whole system if the cause or location of a release is unknown) and any waste that has accumulated in the secondary containment (Sec. 11.1.2).

- Contain any visible releases (Sec. 11.1.3).

- Decide whether to provide secondary containment for the tank system, repair the tank system, replace the tank system, or close the tank system according to Sec. 264.197 (Sec. 11.1.4).

- Prior to placing such a tank system into use again, secondary containment and/or tank system repairs or replacement must be implemented (Sec. 11.1.4). Major repairs must be certified by an independent, qualified, registered professional engineer (Sec. 11.1.5).

Required notifications and reports to the EPA of tank system releases, as per Sec. 264.196(d), are described in Section 11.2 of this document.

11.1 RESPONSE ACTIONS FOR LEAKS OR SPILLS

11.1.1 Waste Flow Stoppage.

Citation

Sec. 264.196 (a) Cessation of Use; prevent flow or addition of wastes. The owner or operator must immediately stop the flow of hazardous waste into the tank system or secondary containment system and inspect the system to determine the cause of release.

Guidance

When a release occurs or is anticipated, the transfer of hazardous waste to a tank system must be immediately stopped as per Sec. 264.196(a). Also, the portion of a tank system that is leaking, if known, should be isolated from the non-leaking parts of the system. Such actions will limit, to the extent possible, the amount of waste that might potentially be released from the tank system. Disconnect and cap all open pipe ends, except for vent piping, when waste flow is stopped.

The waste stoppage requirement applies to leaks or spills to the environment or into a secondary containment system. Following stoppage of waste flow, the tank system and its secondary containment must be inspected for the location of leakage or spillage. The owner or operator should also seek to determine the potential cause of a release. Persons familiar with the circumstances of the release should review and assess the details of the incident to determine why a leak or spill has occurred.

11.1.2 Waste Removal

Citation

Sec. 264.196 (b) Removal of waste from tank system or secondary containment system.

(1) If the release was from the tank system, the owner/operator must, within 24 hours after detection of the leak or, if the owner/operator demonstrates that it is not possible, at the earliest practicable time, remove as much of the waste as is necessary to prevent further release of hazardous waste to the environment and to allow inspection and repair of the tank system to be performed.
(2) If the material released was to a secondary containment system, all released materials must be removed within 24 hours or in as timely a manner as is possible to prevent harm to human health and the environment.

Guidance

In order to minimize endangerment of human health and the environment and to inspect and remedy any damaged tank system equipment that might be causing or could cause a leak or spill, Sec. 264.196(b) requires that as much waste as is necessary to prevent further releases to the environment be removed from the tank system. This waste must be removed at the earliest possible time within 24 hours after detection of the release, or at the earliest possible time if the owner or operator demonstrates to the permitting authority that 24 hours is too little a time.

All of the waste must be removed from the portion of a tank system in which a leak or spill has occurred or is occurring. Thus, if a tank is leaking, all waste above that level in the tank where the leakage has occurred or might occur must be removed. Similarly, leaking ancillary equipment (e.g., a valve) must be evacuated and isolated so that it can be repaired. Piping may be flushed into a non-leaking tank.

It may be necessary to remove all hazardous waste from a tank system to ensure the safety of personnel inspecting and repairing the system. If a tank is to be emptied entirely, it may be necessary to use a special pump to remove the bottom few inches of waste. Vent piping should be left open to allow the tank to "breathe." Explosion-proof or air-driven pumps should be used for hazardous waste removal in the presence of explosive vapors. When pumping waste, pump motors and suction hoses must be bonded to a tank system to prevent electrostatic ignition hazards. All electrical power to a tank system must be shut off following waste removal. All removed sludge and "tank

bottoms" must be properly disposed of in accordance with applicable RCRA regulations.

Logistics problems in some situations could prevent waste removal within 24 hours. In these cases, however, waste removal must commence within 24 hours, and be completed as soon as possible thereafter. In order to protect human health and/or prevent further releases, it may require more than 24 hours to remove hazardous waste from the portion of a tank system in which a release is occurring or is anticipated. Additionally, if compatible alternative storage is not readily available, the owner or operator might require more than 24 hours to complete waste removal activities.

In a similar manner, all waste released to a secondary containment system must be removed within 24 hours or in as short a time as possible, so tank system repairs can begin in a timely manner. All waste in a secondary containment system must be removed to enable the leak-detection monitoring system to function effectively.

11.1.3 Visible Release Containment.

Citation

Sec. 264.196 (c) Containment of visible releases to the environment. The owner/operator must immediately conduct a visual inspection of the release and, based upon that inspection:

(1) Prevent further migration of the leak or spill to soils or surface water; and
(2) Remove, and properly dispose of, any visible contamination of the soil or surface water.

Guidance

Section 264.196(c) requires the tank system owner or operator to conduct an immediate visual inspection of a release and to prevent further migration of the release to soil or surface water. Visible releases, primarily from onground/inground aboveground tank systems without secondary containment, require immediate attention to minimize their potential health and environmental impacts. The response measures required by Sec. 264.196(c)

are immediate actions, not detailed analytical investigations, whose purpose is to minimize the need for more extensive corrective actions in the future.

The extent of aboveground/onground/inground spills and leaks is often readily evident and remedial action plans can be simple and straightforward. When surface releases occur, the flow must be stopped promptly and the waste contained in an area where it can be recovered. Safety and health precautions must be used during all waste cleanup operations.

The sooner waste recovery starts, in general, the greater the quantity that will be recovered. Efforts should be concentrated on blocking the release flow path, by closing off channels into open catchbasins, gutters, or sloping surfaces leading down and away from the release site. A release should be contained as quickly as possible with whatever flow barriers are available, such as containment booms, clay mounds, etc.

After any aboveground released wastes are contained, it must be decided whether to collect them for proper disposal by pumping or by absorbing them. Pollution control contractors and suppliers can provide the required tanks and/or absorbent materials.

In anticipation of possible aboveground spills, an owner or operator of a tank system without secondary containment should stockpile an emergency supply of absorbent pads, containment boom sections, and other response material that may prove useful if a surface spill or leak occurs. As required for their Part B permits under 40 CFR 264 Subparts C and D, all TSD treatment, storage and disposal facilities must have emergency prevention and response equipment on-site for hazardous waste releases.

A surface release may permeate the soil and necessitate both surface and subsurface remedial efforts. Surface releases may also migrate to manholes, drain lines, basements, wetlands, or other low areas. When remedying a visible release, the owner or operator should inspect surrounding streams, waterways, drainage channels, and wetlands. If possible, a competent spill contractor should be hired to prevent waste incursion into these areas.

Collection ditches, interception trenches, barrier curtains, or plastic sheeting should be used for waste flow containment. (API publication 1628 describes the migration of petroleum products in soil and ground water and suggests a number of techniques for trapping and recovering moving liquids.)

When surface soil has become saturated with ignitable liquids, digging must be done with extreme care to avoid any sparks that can ignite released waste. Equipment should operate slowly, with due regard for the danger of explosion in areas with explosive vapor concentrations. Special rubber tips for backhoe shovel teeth and other types of non-sparking equipment are available for protection against sparks. In certain circumstances, the act of moving the soil may ventilate an area sufficiently to reduce vapor concentrations below explosive limits, allowing movement and activity to proceed safely. Removed soils should be placed in box trucks or lined temporary storage areas. Any pools of liquid wastes in the soil should be removed promptly using pumps.

For visible wastes floating on surface water, specialized pumping equipment is available. The equipment required depends upon the depth of the water, the amount of waste, the waste's flow rate into the area, and safety concerns. Specially designed "skimmer" pump systems are available from spill control contractors.

A holding tank for collected wastes may be useful at a waste cleanup site. When filled, the tank can be trucked off-site for final disposition. When small volumes or slow recovery rates are involved, a skid tank or a small heating-oil tank (approximately 275 gallons) may suffice. For high-volume waste cleanups, tanks of up to 4,000 gallons may be needed. The pump-out frequency of a holding tank influences how much on-site waste storage capacity is necessary. Existing non-leaking tanks, if they are compatible with the released wastes, may be used to hold any recovered wastes. A tank truck also may be moved on-site so that wastes canbe pumped directly into it.

At waste cleanup sites, electrical service may be required for pumps and lighting. If ignitable wastes are involved, power equipment should be

explosion-proof. Particular care must be taken when placing electrical machines at ground level because explosive vapors heavier than air may accumulate there. Such vapors sink to the ground and travel downhill to collect against any barrier. If gasoline-powered pumping units are used, they must be located away from any area where explosive vapors may be generated. Because volatile liquids and vapor concentrations may pose fire hazards if they are near a source of ignition, all ignition sources must be kept away from a cleanup site.

To protect further against fire, inhalation, and other hazards, all observation wells, sumps, and wells should be covered and vent piping installed. A sump or well diameter should only be large enough to allow for any necessary cleanup work. When pumps are operating in wells, the agitation created will cause vapors to rise, and lighter vapors may escape. Large, open holes exposing a wide area of volatile liquids should be avoided to minimize vapor loss.

Depending on the chemical nature of a visible, released material, it may be appropriate to identify and locate vapors and to determine vapor concentrations with a sampling device or a vapor-monitoring device.*

Several references are available, that address protection of workers at hazardous waste facilities. Two examples are:

1. Levine and Martin, Protecting Personnel at Hazardous Waste Sites (Boston, Mass.: Butterworth Publishers, 1985).

2. US EPA, Office of Emergency and Remedial Response, "Standard Operating Safety Guidelines" (1984).

---

* A device measuring the potential for explosion is essential whenever potentially flammable or explosive chemicals have been released. Such a device identifies concentrations of vapors posing an explosive potential, but it does not indicate toxic vapors which may occur at concentrations below the lower explosive limit. For toxic organic vapors, devices are available to identify concentrations down to below 1 ppm. Using the EPA's Standard Operating Safety Guidelines, organic vapor readings can indicate appropriate levels of protection for response and cleanup personnel.

In general, work on tanks should never take place if the wind may carry vapors into areas where they could be breathed by unprotected workers.

Following identification, collection, and containment of contamination, Sec. 264.196(c) requires proper removal and disposal of contaminated materials. Thus, all recovered wastes, wastewaters, and any contaminated soils must be sent to a RCRA-permitted hazardous waste handling facility.

11.1.4 Repair, Replacement, or Closure.

Citation

Sec. 264.196(e) Provision of secondary containment, repair, or closure.

(1) Unless the owner/operator satisfies the requirements of paragraphs (e)(2) through (4) of this section, the tank system must be closed in accordance with Sec. 264.197.

(2) If the cause of the release was a spill that has not damaged the integrity of the system, the owner/operator may return the system to service as soon as the released waste is removed and repairs, if necessary, are made.

(3) If the cause of the release was a leak from the primary tank system into the secondary containment system, the system must be repaired prior to returning the tank system to service.

(4) If the source of the release was a leak to the environment from a component of a tank system without secondary containment, the owner/operator must provide the component of the system from which the leak occurred with secondary containment that satisfies the requirements of Sec. 264.193 before it can be returned to service, unless the source of the leak is an aboveground portion of a tank system that can be inspected visually. If the source is an aboveground component that can be inspected visually, the component must be repaired and may be returned to service without secondary containment as long as the requirements of paragraph (f) of this section are satisfied. If a component is replaced to comply with the requirements of this subparagraph, that component must satisfy the requirements for new tank systems or components in Secs. 264.192 and 264.193. Additionally, if a leak has occurred in any portion of a tank system component that is not readily accessible for visual inspection (e.g., the bottom of an inground or onground tank), the entire component must be provided with secondary containment in accordance with Sec. 264.193 prior to being returned to use.

Guidance

Following the stoppage of waste flow, the removal of waste from a tank system, and initial remedial measures for visible releases, the owner or operator will be able to assess the extent of the tank system's damage. At this point, the owner or operator must either, as required by Sec. 264.196(e), close the tank in accordance with Sec. 264.197, repair or replace the tank and install secondary containment, or, in special cases, only repair the damage. Sec. 264.15(c) requires that any tank system equipment or structure showing deterioration or malfunction during an inspection be remedied, as per the specific requirements of Sec. 264.196(e).

Removing a damaged tank is often the best solution, depending on specific environmental conditions, tank age, and the nature of the tank system failure. For example, it may be difficult to determine the location of a leak in a non-enterable underground tank; in such cases, the tank may not be adequately repaired and it should be removed instead. When existing tank systems are relatively new, however, there is no immediate need to replace them. Repairing tank systems in-place may be reliable and is less costly than replacement. Nevertheless, if a repair will be made in an underground or inaccessible location, secondary containment for the repaired component must be provided, as per Sec. 264.196(e)(4). Closure of a tank system applies most often to sites where the tank storage or treatment activity is to be discontinued or moved to another location on the property.

If a tank system is to remain in use, Sec. 264.196(e) requires specific remedial actions by the owner or operator. These actions are listed in Table 11-1. The release scenarios addressed in Table 11-1 are described below.

Note that replacement tank system components are considered new components, which means they must comply with all the design, installation, containment, and detection of release requirements of Secs. 264.192 and 264.193. Also, all replaced tank system components must be decontaminated or properly disposed of in RCRA-permitted hazardous waste handling facilities.

TABLE 11-1

SECTION 264.196 REQUIRED RESPONSES TO TANK SYSTEM RELEASES*

TYPE OF RELEASE	REQUIRED ACTIONS	CITATION
Spill with no damage to tank system	Remove released waste and repair, if necessary.	264.196(e)(2)
Leak from tank system to secondary containment	Repair tank system.	264.196(e)(3)
Aboveground leak from tank system with no secondary containment	Repair tank system and implement visual inspection. New components must meet Secs. 264.192 and 264.193 requirements.	264.196(e)(4)
Underground or inaccessible leak from tank system with no secondary containment	Repair tank system and install secondary containment for the entire component, as per Sec. 264.193 requirements. New components must meet Secs. 264.192 and 264.193 requirements.	264.196(e)(4)
Leak from secondary containment	Repair secondary containment. New components must meet Secs. 264.192 and 264.193 requirements.	264.196
Leak from tank system or secondary containment requiring major repair	Repair tank system or secondary containment as appropriate and obtain certification of adequacy from an independent, qualified, registered professional engineer.	264.196(e)(2-4) and 264.196(f)

* Closure of a tank system under the requirements of Sec. 264.197 is always an option if there has been a release.

NOTE: If it is determined that a tank system release could threaten human health or the environment outside the facility either the EPA Regional Administrator or the National Response Center must be notified immediately. (24-hour toll free number 800/424-8802) [Sec. 264.56 - Emergency Procedures] See section 11.2 Required Notifications and Reports for Specifics.

Spills. As long as a spill does not damage a tank system's integrity via chemical corrosion or other means, an owner or operator may return the system to service after the released waste is cleaned up. Any necessary equipment repair must be undertaken (e.g., repair of an automatic fill device) prior to the tank system being placed in use again.

Leaks into Secondary Containment. All leaks contained by a secure secondary containment system must be cleaned up prior to placing a tank system back in service. All tank system repairs must also be completed prior to tank system usage.

Aboveground Leaks with No Secondary Containment. A leaking or unfit-for-use component may be repaired or replaced without installing secondary containment if the component is to be visually inspected on a daily basis (i.e., the component is aboveground and accessible). Ancillary equipment items where this situation might exist include aboveground flanges, pipe fittings, pumps, and valves. When the repaired tank system is again placed in use, visual inspection of the repaired or replaced component(s) must become a part of the Sec. 264.195(b) daily inspection protocol.

Underground or Inaccessible Leaks with No Secondary Containment. Upon finding a leak in an underground or inacessible (to visual inspection) portion of a tank system, the owner or operator must repair or replace the tank system and install secondary containment for the entire leaking or unfit-for-use component. For example, if a leak is detected in the underground piping of a tank system, all the underground piping of that tank system must be equipped with secondary containment. This requirement ensures that hazardous waste tank system components presenting a substantial risk of release (i.e., because they are inaccessible to regular inspections) are provided with secondary containment. It is not considered prudent to allow an inaccessible portion of a tank system that is leaking or unfit-for-use to continue to operate without secondary containment because other similar leaks may be imminent.

Leak from Secondary Containment. It is especially important that any defect(s) in a secondary containment system be repaired in a timely manner so that any potential future releases from a tank system does not escape to the environment. Notification of such a release from a secondary containment system must be made to the EPA Regional Administrator under Sec. 264.196(d) (see document Section 11.2). Under 40 CFR part 302. A release equal to or exceeding the reportable quantity determined by the same part within a 24-hour period must be immediately reported to the National Response Center (800-424-8802).

Leak from Tank System or Secondary Containment Requiring Major Repair. All of the applicable requirements of Sec. 264.196(e) apply for this type of release scenario, in addition to the certification requirement of Sec. 264.196(f). This requirement is described further in document Section 11.1.5.

Repair Considerations. Guidelines to identify tanks that can be repaired by applying or installing an interior lining are contained in API Publication 1631, "Recommended Practice for the Interior Lining of Existing Steel Underground Storage Tanks." Tanks that are considered reparable by API have:

1. No open seams or splits longer than three inches;
2. No perforation larger than 1 1/2 inches in diameter, except under a gauging opening where the perforation may be no longer than 2 1/2 inches in diameter;
3. Less than five perforations (none larger than 1/2 inch in diameter) in any one square-foot area; and
4. Less than 20 perforations (none larger than 1/2 inch in diameter) in a 500 square-foot area.

The interior lining procedure involves entering a tank to apply a polyester resin or epoxy material on the internal surface, leaving a non-porous, non-corrosive coating. The technique is highly specialized and requires many safety precautions; only contractors trained and experienced in the procedure should be used. Many localities require prior approval of the application method and proof of contractor competence before authorizing use.

Normally, the interior lining/coating procedure should be considered only for newer tanks displaying internal corrosion but still having sufficient plate thickness remaining for long life. Interior lining/coating does not prevent external corrosion, nor does it compensate for the loss of tank system strength caused by thinning of metal walls. Applicators generally furnish a warranty against tank failure following coating for up to 12 years. Applicators reserve the right, however, to examine a tank's internal surface before coating and to refuse service to any tank failing to meet their standards of tank-wall integrity. Further, applicator warranty coverage extends only to repairing any damaged coating and does not include incidental damage, such as that caused by spillage.

Replacement Considerations. When one tank system in a group of underground tanks is to be replaced, the condition of other nearby underground tank systems must be considered because of the potential for corrosion of other tanks caused by tank system replacement (e.g., some type of metal or composite, to minimize corrosion). Whenever feasible, all tank systems in the group (e.g., some type of metal or composite, to minimize corrosion) should be replaced, in the group if the tank systems are of a similar age and construction and if they are located in a comparable environment. There is a high probability that the other nearby tank systems will also fail if they have a similar environment. Replacement underground tanks should be of similar design and material to one another, although not necessarily of the same capacity.

If part of an underground tank system is to be replaced, several considerations are important. First, new steel in the presence of older steel corrodes faster. In the electrochemical activity of corrosion, a new surface is generally more active (anodic) than an older surface, which is generally coated with a thin rust or scale from having been in soil for a long period. It is not uncommon for new steel to corrode and leak within a very short time, while older nearby steel tank systems remain tight.

Occasionally, a tank system is replaced by one of different design and material (e.g., fiberglass replacing steel). Unless careful attention is given to the method of installation, serious problems can arise. For example, if a fiberglass tank is not properly supported by shoring or some form of retaining surface, any future excavations near the tank could cause a "rolling" effect, with subsequent major damage to the tank. A slight movement could cause piping cracks, from which waste could escape. See Section 6.0 for more information on installation procedures.

11.1.5 Certification of Major Repairs

Citation

Sec. 264.196(f) Certification of major repairs. If the owner/operator has repaired a tank system in accordance with paragraph (e) of this section, and the repair has been extensive (e.g., installation of an internal liner; repair of a ruptured primary containment or secondary containment vessel), the tank system must not be returned to service unless the owner/operator has obtained a certification by an independent, qualified,registered, professional engineer in accordance with Sec. 270.11(d) that the repaired system is capable of handling hazardous wastes without release for the intended life of the system. This certification must be submitted to the Regional Administrator within seven days after returning the tank system to use.
[Note.-The Regional Administrator may, on the basis of any information received that there is or has been a release of hazardous waste or hazardous constituents into the environment, issue an order under RCRA sections 3004(u), 3008(h), or 7003(a) requiring corrective action or such other response as deemed necessary to protect human health or the environment.]

Guidance.

Major repairs of a tank system or of a secondary containment system must be certified by an independent, qualified, registered, professional engineer, as required by Sec. 264.196(f). The engineer must certify that the repaired tank system is capable of handling hazardous waste without releases for the intended remaining life of the tank system. Such a certification must be submitted to the EPA Regional Administrator within seven days after returning the tank system to use.

Examples of such extensive repairs include installation of an internal liner because of internal corrosion, repairing a ruptured tank and fixing torn secondary containment liners or cracked concrete vaults. Extensive repairs are generally needed following a rupture or other major loss of structural integrity. Major losses of structural integrity may occur under the following conditions: an accidential puncture of a tank system component by a forklift; a catastrophic event, such as fire, explosion, flood, or seismic activity; a process malfunction, such as overheating or over-pressurization; or improper design or installation including seam-weld breaks, foundation failure, or extensive corrosion. Certification is not needed for routine maintenance and repairs of worn tank system components (e.g., valves, seals, pumps, instrument adjustments, etc.). A description of qualified engineering personnel and the required Sec. 270.11(d) certification is contained in Section 5.0 of this document.

11.2 REQUIRED NOTIFICATIONS AND REPORTS

Notification and Report

There are no required notification or reporting procedures when a release of hazardous waste is (1) less than or equal to one pound and is (2) immediately contained and cleaned up (264.194(d). If the release does not meet the above criterion and the quantity is less than its reportable quantity (as specified in 40 CFR 302) then it must be reported to the EPA Regional Administrator within 24 hours of its detection.

Within 30 days of the detection of the release a report must be submitted to the Regional Administration including the following:

(1) Most probable route of migration of the release.

(2) Characteristics of the soil surrounding the release including geology, hydrogeology, soil composition and climate.

(3) If available, results of any monitoring or sampling conducted in connection with the release. If this sort of data is not available within the 30-day report period, it must be submitted to the Regional Administrator as soon as it is available.

(4) Proximity of release to down-gradient surface water, drinking water and population areas.

(5) Description of response actions that have already been taken or are to take place.

If the quantity of a release is equal to or greater than its reportable quantity (as indicated in 40 CFR 302) then the National Response Center must be notified immediately (800/424-8802).

11.3 SUMMARY OF MAJOR POINTS

This subsection summarizes the immediate response actions required by the Sec. 264.196 regulations whenever a release is detected or anticipated from a tank system that has not been granted a variance from the secondary containment requirements. These response measures supplement those described in a facility's contingency plan, required for the Part B permit application, and must be performed in a timely manner upon detection of an actual or imminent release:

- Was waste flow into the tank system immediately stopped?
- Has an inspection been performed for immediately after release detection?
- Was waste removal from the leaking portion(s) of the tank system and from its secondary containment (if applicable) completed within 24 hours, while ensuring the safety of personnel?

- Have immediate actions been taken to minimize the effects of visible releases? (Such actions include containment, collection, and proper disposal, while employing appropriate worker safety precautions during cleanup activities.)

- Notification/reports

- Is it most appropriate to repair, replace, or close the tank system, based on the extent of damage and the type of releases.

- Have the indirect effects of tank or component replacement (e.g., potentially accelerated corrosion of nearby underground tanks) been considered in the decision to replace?

- Has a certification of adequacy of major repairs been received from an independent, qualified, registered professional engineer?

In addition, see Appendix A, "Completeness Checklist," to verify compliance with the requirements of this section.

12.0 CLOSURE AND POST-CLOSURE REQUIREMENTS

Citation

Information on the closure and post-closure plan must be included in Part B of the permit application as stated in:

Sec. 270.14(b)(13), (15), and (16) copy of closure and post-closure plans and cost estimates.

Guidance

The intent of closure and post-closure plan requirements for storage tank systems, as delineated in Sec. 270.14(b)(13), for Part B of the permit application is to supply information which accurately identifies the appropriate procedures to close a storage/treatment tank system. This section provides guidance on decontamination and disposal procedures, technical guidance on closure and post-closure procedures, and information on what must be provided in the closure/post-closure plan and cost estimates for the Part B permit application. Table 12-1 outlines particular responsibilities for owners and operators under the closure/post-closure care regulations for tank systems falling into one of four categories: (A) tank systems having secondary containment where decontamination or removal is practicable; (B) tank systems having secondary containment where decontamination or removal is not practicable; (C) tank systems without secondary containment where decontamination or removal is practicable; and (D) tank systems without secondary containment where decontamination or removal is not practicable. In cases where tank systems are not provided with secondary containment (categories C and D), regardless of ability to decontaminate practicably, they must fulfill the closure care requirements as well as contingent closure/ post-closure requirements. (See the EPA's "RCRA Guidance Manual for Subpart G Closure and Post-Closure Care Standards and Subpart H Cost Estimating Requirements," available in early '87, for more detailed procedural guidance on these topics.) This document provides specific procedural guidance on closure/ post-closure care and sample closure and post-closure plans. Closure and post-closure cost-estimate worksheets are in a separate manual: "Guidance

Table 12-1

Closure/Post-Closure Requirements

(40 CFR Subparts G & H)

	Tank Systems Having Secondary Containment	Tank System Without Secondary Containment
	CATEGORY A	CATEGORY C
Decontamination or Removal is Practicable (owner/operator plans to close as to a tank)	Closure Plan (§264.112) Closure Activities (§264.111-115) Cost Estimates for Closure (§264.142) Financial Assurance for Closure (§264.143)	Closure Plan (§264.112) Closure Activities (§264.111-115) Contingent Plans (§264.197(c)
	CATEGORY B	CATEGORY D
Decontamination or Removal is not Practicable (Tank System must close as a landfill)	Closure Care (§264.310) (Landfills) Closure Activities as a Landfill (§264.111-116) Post-Closure Care (§264.310) (Landfills) Closure Plan (§264.112) (Landfill) Post-Closure Plan (§264.117) (§264.118) (§264.119) (§264.120) Closure Cost Estimate (§264.142) Post-Closure Cost Estimate (§264.144) Financial Assurance for Closure (§264.143) Financial Assurance for Post-Closure Care (§264.145)	Closure Care (§264.310) (Landfills) Closure Care as a Landfill (§264.112-116) Post-Closure Care (§264.310) (Landfills) Cost Estimates for Closure (§264.142) Financial Assurance for Closure (§264.143) Post-Closure Plan (§264.117) (§264.118) (§264.119) (§264.120) Post-Closure Cost Estimate (§264.144) Financial Assurance for Post-Closure Care (§264.145) Contingent Plans (§264.197(c))

Manual: Cost Estimates for Closure and Post-Closure Plans (Subparts G & H)," Volumes I through IV.

12.1 DECONTAMINATION/REMOVAL PROCEDURES FOR CLOSURE: WHERE DECONTAMINATION AND REMOVAL OF WASTES IS PRACTICABLE AND WHERE SECONDARY CONTAINMENT IS PROVIDED

(CATEGORY A)

Citation

Sec. 264.197(a) states that an owner or operator may fulfill closure requirements for tank systems by demonstrating that there has been:

> complete removal or decontamination of all waste residues, contaminated containment system components (liners, etc.), contaminated soils, and structures and equipment contaminated with waste and that these wastes are managed as hazardous waste, unless Sec. 261.3(d) of this chapter applies. The closure plan, closure activities, cost estimates for closure and financial responsibility for tank systems must meet all of the requirements specified in 40 CFR Subparts G and H of this Part.

Sec. 264.112(b)(4) of Subpart G requires that a description of procedures for removal or decontamination of all hazardous waste residues and contaminated containment system components and soils be provided in the closure plan.

Those owners and operators who have secondary containment must remove all residues at closure and fulfill the following additional requirements under Subparts G and H:

Closure Plan/Closure Activities (§264.111). [See Subsection 12.2 of this document]

Closure Activities (§264.111-115). [See Subsection 12.2 of this document]

Closure Cost Estimate (§264.142). [See Subsection 12.5 of this document]

Financial Assurance for Closure (§264.143). [See Subsection 12.6 of this document]

If it is not possible to demonstrate 'clean closure' (complete decontamination or removal of all residues) then the unit must be closed as a landfill.

Guidance

Section 264.197(a) requires the owner or operator to close the entire tank system, including ancillary equipment and any secondary containment systems associated with the system. All hazardous waste, contaminated soil, and contaminated equipment components must be decontaminated or removed to an interim status or permitted hazardous waste disposal facility. Any contaminated soil or contaminated equipment must be managed as hazardous waste. This regulation does not define the level of decontamination that is required. The EPA is currently developing policy on the broad issue of defining acceptable levels of contamination outside the scope of this document.

When a decision is made to discontinue the use of a tank system permanently, closure may be accomplished by either abandoning the tank system in place or by removing the entire tank system.

The closure of a tank system requires the current owners or operators to remove or decontaminate all residue in the tank system. The surrounding soils, structural support systems, ancillary equipment, and containment system components must be tested to indicate the extent, if any, of contamination. Any materials found to be contaminated with hazardous waste must be physically removed from the tank system area or decontaminated following approved methods.

Information on procedures for cleaning equipment and removing contaminated soils, methods for sampling and testing surrounding soils, and criteria for determining the extent of decontamination must be provided in the closure plan and during closure operations.

If a tank is removed from service due to leakage or suspected leakage, the owner/operator must meet to the requirements of Sec. 264.196(e)(2)(3) and (4) ("Response to and Disposition of Leaking or Unfit-for-Use Tank Systems") or perform closure procedures in accordance with Sec. 264.197. If the following requirements are satisfied the system may be returned to service and the closure requirements will not apply until final closure of the facility or closure of the tank unit:

(1) If the cause of the release (i.e., a spill) has not damaged the integrity of the system and the released waste is removed and repairs are made; and

(2) If the release was a leak from a primary tank system into the secondary containment system and the system was repaired; and

(3) If the source of release was a leak from a component of a tank system without secondary containment and that component is provided with secondary containment before being returned to use. (See Section 11.0 for further details on this subject.)

An unfit-for-use tank system must be closed, replaced, or repaired, as allowed, and any leak or spill must be promptly remedied. After being repaired and before reuse, an unfit-for-use tank system must be certified by a qualified, registered, independent professional engineer as being capable of handling hazardous waste. The tank system must also have secondary containment installed under any part of the tank system that has leaked and is either underground or inground because the leaking portion is not readily accessible to visible inspection.

A) Recommended Decontamination Criteria.

Decontamination is a highly critical task when permanently closing a tank system. Recommended decontamination criteria include:

- Cleaning operations should be performed under the supervision of persons who understand the hazardous potential of the stored waste.

- Personnel must be sufficiently trained and equipped to perform the decontamination operation safely.

- Testing to check for complete decontamination.

- Sludges and residues should be removed from the area near the tank using "explosion proof" equipment, such as vacuum pumps and any other respiratory and safety equipment deemed appropriate.

- All contaminated materials removed from the tank system should be disposed of in a secure hazardous waste treatment, storage, or disposal facility that has interim status or a permit to operate.

- Stubborn residues should be removed by pressure hosing with water, steam cleaning, or solvent washes.

- Residues from cleanup chemicals (e.g., mineral spirits and kerosene) should be treated or disposed of properly.

For further information on tank decontamination procedures see:

- (API) Publication 2015, "Cleaning Petroleum Storage Tanks" (September 1985);

- NFPA No. 327, "Standard Procedures for Cleaning or Safeguarding Small Tanks and Containers" (1982); and

- API Publication 2015A, "A Guide for Controlling the Lead Hazard Associated with Tank Entry and Cleaning (Supplement to API RP 2015).

The determination of whether to abandon a tank in place or remove it for reuse or disposal depends upon several factors, such as the age and condition of the tank, its salvage value, and its potential for reuse. Local laws and ordinances may require tank system removal. Other factors that are important include:

Tank Location. The depth at which the tank is buried, the type of soil in which it is buried, and overhead structures nearby will affect the ease or ability to remove the tank. The potential for damage to concrete or asphalt traffic surfaces and nearby utilities should also be considered.

Projected Use of the Site After Closure. If site plans call for development that involves excavation or regrading to the level of the tank, it is likely that the tank system will have to be removed.

The Cost and Availability of Labor and Equipment. Tank system removal will require the use of heavy equipment and experienced labor. If the cost or use of this labor and equipment is prohibitive, abandonment in place may be the preferred option.

The Proximity of Disposal Sites. The proximity of the disposal site can also greatly affect the cost of tank system removal. Transportation costs could be prohibitive, making abandonment in place the preferred option.

Regulatory Requirements. Local laws or ordinances may require removal of the tank system as part of any permanent closure procedures.

Procedures for abandoning and/or disposing of tank systems are addressed in the following sections.

B) Procedures for Abandoning Underground Tanks in Place (General).

Permanently closed tank storage or treatment systems may be either abandoned in place or removed from the ground. When abandoning an underground tank in place:

- Drain and flush the piping into the tank.
- Remove all hazardous waste that can be pumped out.
- Dig down to the top of the tank.
- Remove fill drop tube and disconnect all fill, inlet and gauge lines. (Leave vent line open until the tank is filled.)
- Cap all open ends of lines that are not to be used further.
- Fill the tank with water until almost overflowing, remove excess waste floating on top and empty into container for appropriate disposal.
- After water has purged the tank, several holes should be made in the tank top, and the water should be pumped out and properly disposed.
- Completely fill the tank and any remaining stubs completely with an approved, non-shrinking, inert solid material (e.g. sand, gravel).
- Test for complete decontamination.
- Disconnect and cap the vent line.

C) Procedures for Abandoning Underground Tanks in Place (Sand-Pumping Method).

- Remove all hazardous waste from the tank and from all connecting lines.
- Test for complete decontamination.

- Cut off vent lines approximately three feet above grade. (This establishes an increased head on sand being pumped into the tank, promoting complete filling of tank). Do not use a cutting torch if ignitable wastes are involved.

- Disconnect and cap extraction (suction) lines.

- Make liquid-tight the threaded connections between fill lines of the tank and the discharge line from the sand pump. On tanks equipped with fill pipes extending below the tank top, remove the extension piping within the tank.

- Attach a drain hose to the end of the vent line using a tight or threaded connection and direct it into a reservoir to hold any residual hazardous waste which might be left in the tank.

- Pump sand into the tank until a dense suspension of sand in water discharges from the vent lines. (At this point, caps may be removed from extraction lines for observation.) Sand should be present here before the pumping is stopped.

- Observe caution in the vent line area due to the possible emission of flammable or toxic vapors. If necessary, conduct vapors to a remote area where there will be no hazard to workers, the public, or the environment.*

---

* EPA is currently in the process of developing regulations under RCRA addressing air emissions from hazardous waste storage and treatment tanks. A proposed rule is expected to be published Fall of '87.

D) Procedures for Abandoning Onground, Inground, Aboveground Tanks in Place.

For safety reasons, removal of onground, inground, aboveground tanks may or may not be a better option than abandonment in place. It should also be noted that local regulations may prohibit the abandonment of tanks in place.

- Remove as much waste as possible from the tank and piping system.
- Disconnect and cap all fill, gauge and vent lines.
- Free the tank of all flammable or toxic vapors.
- Remove all sludge or other tank residues.
- Thoroughly clean the inside of the tank (see references to standards for tank cleaning in (E) of this Sub-section).
- Test for complete decontamination.
- Secure entranceways to prevent casual or accidental entry into tank.
- Anchor tank to prevent flotation if located in a floodplain by filling with inert material (i.e., sand, gravel).

E) Procedures for Preparation for Removal and Disposal of Tanks.

Tanks to be disposed of must be rendered free of hazardous waste. No cutting torch or other flame or spark-producing equipment shall be used until the tank has been completely purged of ignitable vapors or otherwise rendered safe. To obtain information on safe procedures for such operations, refer to:

1) (API) Publication 2015, "Cleaning Petroleum Storage Tanks" (September 1985);

2) API 2015A, "A Guide for Controlling the Lead Hazard Associated with Tank Entry and Cleaning" (1982);

3) API 2015B, "Cleaning Open-Top and Covered Floating-Roof Tanks" (1981);

4) National Institute of Occupational Safety and Health (NIOSH), No. 80-106, "Working in Confined Spaces" (December 1979); and

5) NFPA No. 327, "Standard Procedures for Cleaning or Safeguarding Small Tanks and Containers" (1982).

Removed fiberglass-reinforced plastic (FRP) tanks may sometimes be reused, provided that a thorough inspection of the tank has been made by a factory-approved agent of the manufacturer and that the manufacturer has certified the tank as acceptable for reuse.

The removal of <u>underground tank systems</u> must include procedures for:

- Removing all liquid waste;
- Disconnecting and capping all plumbing and controls;
- Temporarily plugging all tank openings, except for a 1/8-inch hole for venting;
- Removing the tank from the ground;
- Freeing the tank of all flammable or toxic vapors; and
- Transporting the tank from the site.

If the tank is to be disposed of, a sufficient number of holes should be made in it to render it unfit for further use. This discourages possible

future use of it as a container for products that would be contaminated by residual deposits of a material that was previously stored in it. (Sources of additional information on the disposal of storage tanks include NFPA 30, "Flammable and Combustible Liquids Code" (1984), and API Publication 1604, "Recommended Practice for Abandonment or Removal of Used Underground Service Station Tanks" (1981)).

The removal of aboveground, inground and onground tank systems must include procedures for:

- Removing all liquid from the tank and piping system;
- Disconnecting and capping all fill, gauge and vent lines;
- Freeing the tank of all flammable or toxic vapors;
- Removing all sludge or other tank residues;
- Thoroughly cleaning the outside of the tank;
- Render it unfit-for-further use by puncturing holes in the walls of the tank; and
- Dismantling the tank if necessary (tank dismantling from the outside is recommended to limit worker exposure hazards). For further details on dismantling and disposal precautions in steel tanks, refer to API PSD-2202.

12.2 CLOSURE PLAN AND CLOSURE ACTIVITIES: THE PART B APPLICATION

Citation

Sec. 264.197(a). The closure plan, closure activities, and cost estimates for closure and financial responsibility for tank systems must meet all of the requirements specified in Subparts G and H of this part.

Applicable sections in Subparts G and H include Sec. 264.110-115 (closure plan and closure activities), Sec. 264.142 (cost estimates for closure), and Sec. 264.143 (financial assurance for closure).

The closure plan and activities will be covered in this section of the document.

Guidance

Owners or operators with secondary containment must submit, as part of the Part B permit application, a closure plan meeting the requirements of subparts G and H of Part 264. If however the owners or operators can demonstrate, in accordance with Sec. 264.197(b), that they are unable to remove all contaminated soils practicably they must follow landfill closure/post-closure procedures. If the owners or operators have not prepared contingent closure and post-closure plans, they must revise their existing plan in accordance with Subpart G. This scenario is discussed in Sections 12.3 and 12.4 for tanks with and without secondary containment. Owners or operators without secondary containment must submit contigent closure and post-closure plans with their Part B application.

The closure plan must ensure that the general closure performance standard is met [§264.111(a)] such that: (1) the need for further maintenance is minimized; and (2) that the stated procedures control, minimize or eliminate, to the extent necessary to protect human health and the environment, post-closure escape of hazardous waste, hazardous constituents, leachate, contaminated run-off, or hazardous waste decomposition products to the ground or surface waters or to the atmosphere.

The written closure plan must identify steps necessary to perform partial and/or final closure of the facility and must include, at least:

- A description of how and when the facility will be partially and completely closed, including but not limited to methods for removing, transporting, treating, storing or disposing of all hazardous wastes

and for identification of the types of off-site hazardous waste management units to be used;

- An estimation of the maximum inventory of hazardous waste stored on-site over the active life of the facility; (264.112(b)(3))

- A detailed description of the steps needed to remove or decontaminate all hazardous waste residues and contaminated containment system components, equipment, structures and soils during partial and final closure, including but not limited to procedures for cleaning equipment and removing contaminated soils, methods for sampling and testing surrounding soils, and criteria for determining the extent of decontamination; (264.112(b)(4))

- A detailed description of other activities necessary to prevent post-closure escape of hazardous wastes, including but not limited to ground-water monitoring, leachate collection, and run-on and run-off control; (264.112(b)(5))

- A schedule for closure of each hazardous waste management unit and for final closure of the facility, including at a minimum, (1) the total time required to close each hazardous waste management unit and (2) the time required for intervening closure activities which will allow tracking of the progress of partial and final closure (264.112(b)(6)).

- An estimate of the expected year of final closure [for facilities that use trust funds to establish financial assurance <u>only</u>] (264.112(b)(7)).

Some of the important areas to cover in the closure plan, in addition to those mentioned above, are the following circumstances, which may lead to environmental hazards. The closure plan should provide for protection from:

- Leakage from deteriorated tank systems;

- Accidental intrusion or tank collapse during subsequent construction or excavation activities;

- Reuse of abandoned tank systems without meeting regulations or using proper safeguards;

- Subsidence of the abandoned tank structure caused by additional tank deterioration, which may create hazards to nearby personnel and buildings; and

- Fire or explosion hazards caused by incomplete waste removal or inadequate protective measures.

To ensure that the potentially damaging situations cited above do not develop, all tanks, ancillary equipment, and secondary equipment must be properly closed. Closure procedures may be based on either temporary or permanent withdrawal from service, each requiring specific steps applicable to the type of closure.

Within 60 days after final closure, the owner or operator must submit to the Regional Administrator by registered mail a certification that the tank system has been closed in accordance with the specifications in the approved closure plan. If, however, the tank system is the only hazardous waste management unit being closed at a hazardous waste management facility, certification is not required until final facility closure. However a professional engineer may not be able to certify proper tank closure at a later date without adequate documentation. Therefore, it might be prudent to have a professional engineer certify tank closure at the time of the partial closure even though it is not necessarily required.

12.3 CLOSURE OF TANK SYSTEM: WHEN DECONTAMINATION AND REMOVAL OF WASTES IS NOT PRACTICABLE AND WHERE SECONDARY CONTAINMENT IS PROVIDED

(CATEGORY B)

Citation

Sec. 264.197(b). If the owner or operator demonstrates that not all contaminated soils can be practicably removed or decontaminated as

required in paragraph (a) of this section, then the owner or operator must close the tank system and perform post-closure care in accordance with the closure and post-closure care requirements that apply to landfills (§264.310). In addition, for the purposes of closure, post-closure and financial responsibility, such a tank system is then considered to be a landfill, and the owner or operator must meet all of the requirements for landfills specified in Subparts G and H of this Part.

Guidance

Upon closure, the owner operator is required to clean-up all equipment, wastes and soil in accordance with the approved closure plan. If, however the owner or operator can demonstrate that decontamination or removal of all soils is not practicable, the owner/operator must then close as a landfill. The closure plan must be amended and a post-closure plan, and post-closure cost estimate must be prepared. Financial assurance must be obtained for post-closure as well. (See the EPA's "Guidance Manual: Cost Estimates for Closure and Post-Closure Plans (Subparts G & H)," Volumes I through IV.

An impermeable cap over the contaminated area will reduce the possibility of the waste in the soil migrating into the ground water. In addition, implementation of a ground-water monitoring program will maximize the probability that any migrating contamination will be detected and remedial action initiated before human health and the environment are adversely affected during the post-closure care period. For guidance on ground-water monitoring, refer to "RCRA Ground Water Monitoring Technical Enforcement Guidance Document," U.S. Environmental Protection Agency (August 1985, Draft).

In summary, the landfill closure requirements applicable to hazardous waste storage tank systems are:

- A secure final cover must be designed and constructed to minimize the migration of wastes through the closed landfill;

- Cover must be vegetated to promote drainage, minimize erosion, and accommodate settling and subsidence;
- Cover should be less permeable than natural subsoils on the site; and
- Cover should function with minimum maintenance.

The secure landfill must also follow post-closure regulations, such as:

- Survey plat submittal (§264.116);
- Maintain final cover and cap integrity;
- Leak-detection system;
- Maintain and monitor ground-water monitoring system;
- Maintain run-on and runoff control systems (to prevent erosion of the cap); and
- Protect surveyed land benchmarks.

As indicated in Table 12-1 the following provisions applicable to landfills must be complied with as well:

Closure and Post-Closure Cost Estimates (Secs. 264.142 and 264.144). (See Sub-Section 12.5 of this section.)

Financial Assurance for Closure and Post-Closure (Secs. 264.143 and 264.145). (See Sub-Section 12.6 of this Section.)

12.4 CLOSURE AND POST-CLOSURE REQUIREMENTS: FOR TANK SYSTEMS THAT DO NOT HAVE SECONDARY CONTAINMENT (CATEGORY C & D)

Citation

Sec. 264.197(c) If an owner or operator has a tank system that does not have secondary containment that meets the requirements under Sec. 264.193(b) through (f) and is not exempt from the secondary containment requirements in accordance with Sec. 264.193(g), then:

(1) The closure plan for the tank system must include both a plan for complying with the closure plan in paragraph(a) of this section and a contingent plan for complying with post-closure care in accordance with the closure and post-closure care requirements that apply to landfills.

(2) A contingent post-closure plan for requirements that apply to landfills must be prepared and submitted as part of the permit application.

Guidance

As indicated in Table 12-1, an owner or operator of a tank system that does not have secondary containment on the effective date of the regulations, regardless of the practicability of removing or decontaminating hazardous residues, must prepare two closure plans and a post-closure plan. The first plan must comply with the total removal/decontamination requirements of Sec. 264.197(a). The second plan must comply with the Sec. 264.197(b) closure contingency requirements for landfills. In addition, the owner or operator must prepare a contingent post-closure plan. These contingent plans would be used only if all contaminated residues and soils could not be practicably removed at closure. The objective of this requirement is to minimize future threats to public health and the environment caused by undetected leaks from facilities without the protection of secondary containment.

Concerning closure activities for this category the owner/operator should first initiate closure activities for "clean closure" (§264.197(a)) tanks if feasible. If the owner or operator can demonstrate that "clean closure" is not feasible the owner/operator is then required to 1) decontaminate and remove the tank and as much of the surrounding contaminated area as possible, 2) perform closure activities as a landfill, 3) perform post-closure activities as a landfill, and 4) continue financial assurance for post-closure.

A tank system that receives a variance from secondary containment under Sec. 264.193(g) of the regulations is not required to prepare a contingent closure and post-closure plan. In granting such a variance, the EPA would have previously examined the tank system's design, operation, and location characteristics and determined that hazardous waste would not migrate into ground or surface water.

A tank system with an approved secondary containment system will not be required to prepare a contingent closure and post-closure plan. However, if that tank system has evidenced releases of hazardous waste, and the waste cannot be removed or decontaminated at closure, then that tank system would also have to amend its closure plan and prepare a post-closure plan in accordance with Sec. 264.197(b). Similarily, if there is evidence of leakage from a tank system before the installation of secondary containment, the leak would have to be addressed pursuant to the response to leaks or spills and disposition of leaking or unfit-for-use tank systems requirements in 40 CFR 264.196 (see Section 11.0 of this document for further details on this subject.) In addition, if a variance has been granted but then migration occurs closure/post-closure requirements must be adhered to.

12.5 CLOSURE/POST-CLOSURE COST ESTIMATES

Citation

Section 264.142(a). The owner or operator must have a detailed written estimate, in current dollars, of the cost of closing the facility in

accordance with the requirements in §§264.111- 264.115 and applicable closure requirements in §264.178, §264.197, §264.228, §264.258, §264.280, §264.310, and §264.351....*

Section 264.144(a). The owner or operator of a disposal surface impoundment, land treatment, or landfill unit, or of a surface impoundment or waste pile required under §§264.228 and 264.258 to prepare a contingent closure and post-closure plan must have a detailed written estimate, in current dollars, of the annual cost of post-closure monitoring and maintenance of the facility in accordance with the applicable post-closure regulations in §§264.117-120, §264.228, §264.258, §264.280 and §264.310.**

Guidance

Cost estimates for closure and post-closure must be calculated in accordance with the general closure and post-closure cost estimating requirements in Secs. 264.142 and 264.144, as illustrated in Table 12-1 of this section. All facilities that store, treat, or dispose of hazardous waste are required to prepare a closure cost estimate (Sec. 264.142).

For owners and operators of tank systems having secondary containment, upon discovery that complete removal or decontamination of hazardous waste is not practicable, a post-closure cost estimate (§264.144) must be prepared. For tank systems without secondary containment, regardless of whether removal or decontamination is practicable, contingent post-closure costs estimates are required. The owner or operator must also revise their closure cost estimates. These cost estimate requirements are summarized below.

A) Closure Cost Estimates.

The owner or operator must prepare a closure cost estimate in current dollars, reflecting the cost of closure at the point in the facility's operating life when closure would be most expensive, as indicated by the closure plan. The "worst-case" closure cost estimate should reflect

---

* For our purposes §264.197 (closure of tanks) and §264.310 (closure of landfills) are of most concern.

** For our purposes §264.117-120 (general post-closure care requirements) and §264.310 (closure and post-closure care of landfills) are of most concern.

maximum anticipated costs for each planned activity in the closure plan, including:

- Manpower;
- Hiring a third party to close the tank system, i.e., subcontractor's cost for tank system removal, soil excavation, and decontamination of equipment and/or tanks;
- Analytical work to determine the extent of soil contamination, if any;
- Transportation and disposal of contaminated tanks, piping, appurtenances, and soil;
- Independent, qualified, registered professional engineer to certify the closure activities; and
- Any other closure activities.

The closure cost estimate should not include salvage value that may be realized with the sale of hazardous wastes, facility structures or equipment, land, or other assets associated with the facility at the time of closure. The owner or operator may not incorporate a zero cost for hazardous wastes that might have economic value. Cost estimates, in addition, must be updated yearly to account for inflation (See Sec. 264.142(b) for further details on inflation adjustment requirements. Also see the EPA's "RCRA Guidance Manual for Subpart G Closure and Post-Closure Care Standards and Subpart H Cost Estimating Requirements.")

During the active life of the facility if a closure plan needs modification, a request to modify the closure plan must be submitted to the Regional Administrator. If a change in a plan increases the cost of closure then the closure cost estimate must be updated no later than 30 days after Regional Administrator approval of the modified closure plan.

Closure cost estimates should be prepared in tabular form, clearly reflecting the closure activities and their costs. [An example of a closure cost estimate for a tank system can be found in EPA's "Guidance Manual Cost Estimates for Closure and Post-Closure Plans (Subparts G and H)" Volumes I through IV, available in early 1987.]

B) Post-Closure Estimate.

In preparing a post-closure cost estimate, the owner or operator must, as with the closure cost estimate, have a detailed written estimate in current dollars of the annual cost of post-closure monitoring and maintenance of the facility, in accordance with the applicable post-closure regulations (Secs. 264.117-120 and 264.310).

The post-closure cost estimate must be based on the costs to the owner or operator of hiring a third party to conduct post-closure activities. It should be calculated by multiplying by the number of years of post-closure care required times third-party hiring annual costs.

The post-closure cost estimate must be adjusted for inflation (see Sec. 264.144(b) of 40 CFR for details). As with the closure cost estimates, during the active life of the facility if a post-closure plan needs modification a request to modify the post-closure plan must be submitted to the Regional Administrator. If a change in the plan increases the cost of post-closure then, the post-closure cost estimate must be updated within 30 days after Regional Administrator approval of the modified post-closure plan.

For tank systems without secondary containment, cost estimates calculated for post-closure care must reflect the costs of complying with the contingent post-closure plan.

Sample worksheets for landfill closure and post-closure can be found in "Guidance Manual: Cost Estimates for Closure and Post-Closure Plans (Subparts G and H)" Volumes I through IV.

12.6 FINANCIAL ASSURANCE FOR CLOSURE AND POST-CLOSURE CARE

A) Financial Assurance for Closure Care.

Under the 40 CFR Subpart H Closure/Post-Closure requirements, the owner or operator of a tank system subject to the closure cost estimate requirements (Sec. 264.142) must establish financial assurance for closure care in accordance with the approved closure plan for the facility 60 days prior to the initial receipt of hazardous waste. (See Sec. 264.143 of Subpart H for further details.)

B) Financial Assurance for Post-Closure Care.

Section 264.145 requires the owner or operator of a tank system subject to the post-closure cost estimate requirements (Sec. 264.144) to establish financial assurance for post-closure care in accordance with the approved post-closure plan for the facility. Owners or operators having secondary containment are not required to have a contingent post-closure plan, but if they have demonstrated the need to close as a landfill they must demonstrate financial assurance for post-closure care.

12.7 SUMMARY OF MAJOR POINTS

The following summarizes the information covered in this section and should be used to assure the completeness of a Part B permit application.

For a tank system with approved secondary containment on the effective date of the regulations:

- Have the removal and/or decontamination procedures for closure been clearly described in the closure plan?

- Has the fate of the removed or decontaminated tank system been described?

- Does the closure plan address complete removal of the tank system and contaminated soils in a logical manner?

- Has an appropriate cost estimate been prepared which reflects all closure costs?

- If the tank system is to be abandoned in place, has further use of or access to the tank been adequately prevented?

- If removal or decontamination of all contaminated soils is not practicable following final closure activities, have the requirements for closure and post-closure care for landfills and post-closure plans and cost estimates been fulfilled?

For a tank system without approved secondary containment on the effective date of the regulations:

- Has a closure plan been developed which satisfies the Sec. 264.197(a) requirements?

- Have contingent closure and post-closure plans and cost estimates been developed which satisfy Sec. 264.197(b) if contaminated soil, system components, equipment, residues and structures cannot be successfully removed under the closure care activities?

In addition, see Appendix A, "Completeness Checklist," to verify compliance with the requirements of this section.

13.0 PROCEDURES FOR TANK SYSTEMS THAT STORE OR TREAT IGNITABLE, REACTIVE, OR INCOMPATIBLE WASTES

Information on tank system design and operating procedures for a tank system that stores or treats ignitable, reactive, or incompatible wastes must be included in Part B of the Resource Conservation and Recovery Act (RCRA) permit application, as specified in Sec. 270.16(j):

> For tank systems in which ignitable, reactive, or incompatible wastes are to be stored or treated, a description of how operating procedures and tank system and facility design will achieve compliance with the requirements of §264.198 and §264.199.

The requirements of Secs. 264.198 and 264.199 were developed to minimize the risks from storage or treatment of these special types of wastes. Such risks include fire, gas and/or heat generation, explosion, etc.

13.1 IGNITABLE OR REACTIVE WASTES, GENERAL PRECAUTIONS

Citation

Section 264.198 states the special requirements for ignitable or reactive wastes, which cannot be placed in a tank or its ancillary equipment unless:

(1) The waste is treated, rendered [inert], or mixed before or immediately after placement in the tank system so that the resulting waste, mixture, or dissolved material no longer meets the definition of ignitable or reactive waste under §261.21 or 261.23 of this Chapter, and §264.17(b) is complied with; or

(2) The waste is stored or treated in such a way that it is protected from any material or conditions that may cause the waste to ignite or react; or

(3) The tank system is used solely for emergencies.

Guidance

A major factor in the proper handling of hazardous waste is the ability to classify it by unique physical properties or general characteristics, as described in:

§261.21, characteristic of ignitability;

§261.23, characteristic of reactivity; and

§264.17, general requirements for ignitable, reactive, or incompatible wastes.

Sections 261.21 and 261.23 should be used to determine if the waste exhibits the characteristics of ignitability and reactivity under this regulation (see Figure 13-1). It should be noted that this regulation's definition of reactive or ignitable substances differs slightly from the U.S. Department of Transportation (DOT) and National Fire Protection Association (NFPA) classifications.

Section 264.17 details some specific requirements for handling ignitable, reactive, and incompatible wastes (see Figure 13-2). Section 264.17(a) deals with control of ignition sources. Section 264.17(b) requires control of chemical reactions. Section 264.17(c) requires documentation of compliance with the design and operating precautions needed for the entire tank system to store and treat ignitable and reactive wastes.

When a facility stores, treats, or disposes of ignitable or reactive wastes, precautions must be taken in order to avoid one or more of the following undesirable and dangerous reaction consequences:

1. Heat (or pressure) generation via chemical reaction.

2. Fire produced from extremely exothermic reactions or ignition of reactive mixtures/products.

3. Innocuous gas generation (e.g., CO_2, N_2) that can cause pressurization and subsequent rupture of a closed tank.

4. Toxic gas generation (e.g., H_2S, HCN).

FIGURE 13-1

40 CFR 261.21
CHARACTERISTIC OF IGNITABILITY

(a) A solid waste exhibits the characteristic of ignitability if a representative sample of the waste has any of the following properties:

(1) It is a liquid, other than an aqueous solution containing less than 24 percent alcohol by volume and has flash point less than 60°C (140°F), as determined by a Pensky-Martens Closed Cup Tester, using the test method specified in ASTM Standard D-93-79 or D-93-80 (incorporated by reference, see § 260.11), or a Setaflash Closed Cup Tester, using the test method specified in ASTM Standard D-3278-78 (incorporated by reference, see § 260.11), or as determined by an equivalent test method approved by the Administrator under procedures set forth in §§ 260.20 and 260.21.

(2) It is not a liquid and is capable, under standard temperature and pressure, of causing fire through friction, absorption of moisture or spontaneous chemical changes and, when ignited, burns so vigorously and persistently that it creates a hazard.

(3) It is an ignitable compressed gas as defined in 49 CFR 173.300 and as determined by the test methods described in that regulation or equivalent test methods approved by the Administrator under §§ 260.20 and 260.21.

(4) It is an oxidizer as defined in 49 CFR 173.151.

(b) A solid waste that exhibits the characteristic of ignitability, but is not listed as a hazardous waste in Subpart D, has the EPA Hazardous Waste Number of D001.

[45 FR 33119, May 19, 1980, as amended at 46 FR 35247, July 7, 1981]

40 CFR 261.23
CHARACTERISTIC OF REACTIVITY

(a) A solid waste exhibits the characteristic of reactivity if a representative sample of the waste has *any* of the following properties:

(1) It is normally unstable and readily undergoes violent change without detonating.

(2) It reacts violently with water.

(3) It forms potentially explosive mixtures with water.

(4) When mixed with water, it generates toxic gases, vapors or fumes in a quantity sufficient to present a danger to human health or the environment.

(5) It is a cyanide or sulfide bearing waste which, when exposed to pH conditions between 2 and 12.5, can generate toxic gases, vapors or fumes in a quantity sufficient to present a danger to human health or the environment.

(6) It is capable of detonation or explosive reaction if it is subjected to a strong initiating source or if heated under confinement.

(7) It is readily capable of detonation or explosive decomposition or reaction at standard temperature and pressure.

(8) It is a forbidden explosive as defined in 49 CFR 173.51, or a Class A explosive as defined in 49 CFR 173.53 or a Class B explosive as defined in 49 CFR 173.88.

(b) A solid waste that exhibits the characteristic of reactivity, but is not listed as a hazardous waste in Subpart D, has the EPA Hazardous Waste Number of D003.

FIGURE 13-2

40 CFR 264.17
GENERAL REQUIREMENTS FOR IGNITABLE, REACTIVE, OR INCOMPATIBLE WASTES

(a) The owner or operator must take precautions to prevent accidental ignition or reaction of ignitable or reactive waste. This waste must be separated and protected from sources of ignition or reaction including but not limited to: open flames, smoking, cutting and welding, hot surfaces, frictional heat, sparks (static, electrical, or mechanical), spontaneous ignition (e.g., from heat-producing chemical reactions), and radiant heat. While ignitable or reactive waste is being handled, the owner or operator must confine smoking and open flame to specially designated locations. "No Smoking" signs must be conspicuously placed wherever there is a hazard from ignitable or reactive waste.

(b) Where specifically required by other sections of this part, the owner or operator of a facility that treats, stores or disposes ignitable or reactive waste, or mixes incompatible waste or incompatible wastes and other materials, must take precautions to prevent reactons which:

(1) Generate extreme heat or pressure, fire or explosions, or violent reactions;

(2) Produce uncontrolled toxic mists, fumes, dusts, or gases in sufficient quantities to threaten human health or the environment;

(3) Produce uncontrolled flammable fumes or gases in sufficient quantities to pose a risk of fire or explosions;

(4) Damage the structural integrity of the device or facility;

(5) Through other like means threaten human health or the environment.

(c) When required to comply with paragraph (a) or (b) of this section, the owner or operator must document that compliance. This documentation may be based on references to published scientific or engineering literature, data from trial tests (e.g., bench scale or pilot scale tests), waste analyses (as specified in § 264.13), or the results of the treatment of similar wastes by similar treatment processes and under similar operating conditions.

(Approved by the Office of Management and Budget under control number 2050-0012)

[46 FR 2848, Jan. 12, 1981, as amended at 50 FR 4514, Jan. 31, 1985]

5. Flammable gas generation (e.g., C_2H_2, H_2).

6. Explosion resulting from a vigorous reaction or a reaction producing sufficient heat to detonate an unstable reactant or reaction product.

7. Uncontrolled polymerization producing extreme heat and possibly flammable and toxic gases.

8. Solubilization of toxic substances (including metals).

Dissipation of hazard can be achieved by ensuring that any ignitable or reactive waste will not be placed in a storage tank, unless the waste is treated, mixed, or rendered inert prior to or immediately after placement in the tank system. The process selected to alter the ignitable or reactive characteristic(s) of a waste must be waste-specific. Dilution, ion-exchange, and precipitation are examples of acceptable practices for rendering a waste non-reactive. The specific process used to alter the ignitable or reactive characteristic(s) of a waste must be tested and validated at bench scale before it is applied at an industrial tank facility. Most important, if a waste is mixed with another material (waste or otherwise), the mixed materials must be compatible. The resulting waste material, following treatment or mixing, should no longer fit the definition of ignitable or reactive waste, as specified in Secs. 261.21 and 261.23 or Sec. 264.17 (see Figure 13-2). Sections 264.17(a) and 264.17(b) are equivalent, in essence, to Section 264.198(a)(2), which requires that protective measures be instituted to ensure that any storage and treatment methods do not cause the waste to ignite or react. For example, a tank system should be isolated from potential sources of sparks, flames, lightning, smoking, etc. This regulatory section enables a RCRA incineration facility to store ignitable wastes <u>if and only if</u> the facility is designed and operated in a manner that assures the stored wastes will have no possibility for ignition. Static sparks, from liquid movement in a tank causing an accumulation of static charge, can be prevented by: avoiding "splash-filling" of a tank; limiting the velocity of an incoming waste stream into a tank to a maximum 1 m/sec; eliminating extraneous metal objects in a tank; and grounding tank-fill nozzles to the tank during filling. (Table 13-1 lists references with additional information on ignition safeguards and fire prevention related to tank storage).

TABLE 13-1

IGNITION PREVENTION REFERENCES

Document Number	Title	Date
API RP 2003[1]	Protection Against Ignitions Arising Out of Static, Lightning and Stray Currents, Fourth Edition	1982
NFPA 30[2]	Flammable and Combustible Liquids Code	1984, 1981, 1977
NFPA 70	National Electrical Code	1984
NFPA 77	Recommended Practice on Static Electricity	1983
NFPA 78	Lightning Protection Code	1983
NFPA SPP-1E	Fire Protection Guide on Hazardous Materials	1984

[1] American Petroleum Institute (API).

[2] National Fire Protection Association (NFPA).

A tank system may be used temporarily to hold ignitable or reactive waste in an emergency situation, in accordance with Sec. 264.198(a)(3). For instance, if there is a fire in one portion of a facility, ignitable waste may have to be moved temporarily to other tanks at the facility during this emergency. The temporary storage tanks may not be as well protected from lightning, for example, as the tanks near the fire, but under the circumstances, the temporary storage tanks are still more protective of the waste than having the waste remain near the fire. Similarly, if a malfunctioning pump cannot be shut off, ignitable waste may be placed in other tanks temporarily, until the pumping problem is resolved and the waste can be removed to the proper tanks. An owner or operator must take care not to make an emergency situation worse by temporarily placing ignitable or reactive waste in tank systems with a high probability of ignition or reaction.

13.2 DISTANCE REQUIREMENTS FOR IGNITABLE OR REACTIVE WASTES

Citation

Protective distance requirements for the storage of ignitable or reactive wastes are specified in Sec. 264.198(b), which states:

> The owner or operator of a facility where ignitable or reactive waste is stored or treated in a tank must comply with the requirements for the maintenance of protective distances between the waste management area and any public ways, streets, alleys, or an adjoining property line that can be built upon as required in Tables 2-1 through 2-6 of the National Fire Protection Association's "Flammable and Combustible Liquids Code," (1977 or 1981), ...

Concerning the requirements for the maintenance of protective distances it should be noted that the distance measurement should be taken from the area in which the major quantity of hazardous waste resides and this is generally the tank. Therefore in fulfilling the protective distance requirements, measurements should be based on the distance from the actual tank to the public way.

Guidance

To store or treat ignitable or reactive waste, the owner or operator of a facility must comply with protective distance requirements for tanks, as specified in the National Fire Protection Association's "Flammable and Combustible Liquids Code" (NFPA 30). The principal tank siting criteria are based on tank contents, the distance between tanks, and the spacing between a tank and a property line and/or nearby structures. Restrictions on spacing are generally based upon a fraction of a tank's diameter.

The NFPA's classifications for tank contents are defined in Table 13-2. These definitions must be applied when using NFPA 30 tank siting criteria tables (Tables 13-3 through 13-8 in this document). The NFPA definitions have to be compared to the 40 CFR 261.21 and 261.23 (Figure 13-1) definitions of ignitables and reactives. For example, a liquid waste with a flash point of 95°F (35°C) is classified as an "ignitable" under the RCRA regulations, it is classified as a "flammable," not combustible, liquid by the NFPA.

Concerning the requirements for the maintenance of protective distances, it should be noted that the distance measurement should be taken from the area in which the major quantity of hazardous waste resides, and this is generally the tank itself. Therefore, in fulfilling the protective distance requirements, measurements should be based on the distance from the actual tank to the public way.

Types of tanks, protective measures, and minimum distance requirements for stable liquids with operating pressures of 2.5 psig (17.24 kPa) or less and greater than 2.5 psig are specified in Tables 13-3 and 13-4, respectively. The NFPA protective distance requirements for boil-over liquids and unstable liquids are listed in Tables 13-5 and 13-6, respectively. Tables 13-7 and 13-8 determine spacing by tank capacity. Table 13-7 refers to Class IIIB liquids, which are combustible liquids with flash points at or above 200°F (93.4°C). Table 13-8 is a reference table for use with Tables 13-3 through 13-6.

TABLE 13-2

DEFINITION AND CLASSIFICATION FOR TANK CONTENTS BY NFPA

Definition of General Terms

Liquid. For the purpose of this code, any material which has a fluidity greater than that of 300 penetration asphalt when tested in accordance with ASTM D-5-78, Test for Penetration for Bituminous Materials. When not otherwise identified, the term liquid shall mean both flammable and combustible liquids.

Flash Point. The minimum temperature at which a liquid gives off vapor in sufficient concentration to form an ignitable mixture with air near the surface of the liquid within the vessel as specified by appropriate test procedure and apparatus as follows:

The flash point of a liquid having a viscosity less than 45 SUS at 100°F (37.8°C) and a flash point below 200°F (93°C) shall be determined in accordance with ASTM D-56-82, Standard Method of Test for Flash Point by the Tag Closed Tester.

The flash-point of a liquid having a viscosity of 45 SUS or more at 100°F (37.8°C) or a flash point of 200°F (93°C) or higher shall be determined in accordance with ASTM D-93-80, Standard Method of Test for Flash Point by the Pensky Martens Closed Tester.

As an alternate, ASTM D-3828-81, Standard Methods of Tests for Flash Point of Petroleum and Petroleum Products by Setaflash Closed Tester, may be used for testing aviation turbine fuels within the scope of this procedure.

As an alternate, ASTM D-3278-82, Standard Method of Tests for Flash Point of Liquids by Setaflash Closed Tester, may be used for paints, enamels, lacquers, varnishes and related products and their components having flash points between 32°F (0°C) and 230°F (110°C), and having a viscosity lower than 150 stokes at 77°F (25°C).

As an alternate, ASTM D-3828-79, Standard Test Methods for Flash Point of Liquids by Setaflash Closed Tester, may be used for materials other than those for which specific Setaflash Methods exist (cf., ASTM D-3243-77 for aviation turbine fuels and ASTM D-3278-78 for paints, enamels, lacquers, varnishes, related products and their components.)

Source: "NFPA 30: Flammable and Combustible Liquids Code 1984."

Continued on next page.

TABLE 13-2 Continued

Definition and Classification of Tank Contents

Boil-Over. An event in the burning of certain oils in an open top tank when, after a long period of quiescent burning, there is a sudden increase in fire intensity associated with expulsion of burning oil from the tank. Boil-over occurs when the residues from surface burning become more dense than the unburned oil and sink below the surface to form a hot layer which progresses downward much faster than the regression of the liquid surface.

When this hot layer, called a "heat wave," reaches water or water-in-oil emulsion in the bottom of the tank, the water is first superheated, and subsequently boils almost explosively, overflowing the tank. Oils subject to boil-over must have components having a wide range of boiling points, including both light ends and a viscous residue. These characteristics are present in most crude oils and can be produced in synthetic mixtures.

NOTE: A boil-over is an entirely different phenomenon from a slop-over or froth-over. Slop-over involves a minor frothing which occurs when water is sprayed onto the hot surface of a burning oil. Froth-over is not associated with a fire but results when water is present or enters a tank containing hot viscous oil. Upon mixing, the sudden conversion of water to steam causes a portion of the tank contents to overflow.

Combustible Liquid. A liquid having a flash point at or above 100°F (37.8°C).

Combustible Liquids shall be subdivided as follows:

Class II liquids shall include those having flash points at or above 100°F (37.8°C) and below 130°F (60°C).

Class IIIA liquids shall include those having flash points at or above 130°F (60°C) and below 200°F (93°C).

Class IIIB liquids shall include those having flash points at or above 200°F (93°C).

Flammable Liquid. A liquid having a flash point below 100°F (37.8°C) and having a vapor pressure not exeeding 40 lbs per sq in. (absolute) (2,068 mm Hg) at 100°F (37.8°C) shall be known as a Class I liquid.

Class I liquids shall be subdivided as follows:

Class IA shall include those having flash points below 73°F (22.8°C) and having a boiling point below 100°F (37.8°C).

Class IB shall include those having flash points below 73°F (22.8°C) and having a boiling point at or above 100°F (37.8°C).

Continued on next page.

TABLE 13-2 Continued

Class IC shall include those having flash points at or above 73°F (22.8°C) and below 100°F (37.8°C).

Unstable (Reactive) Liquid. A liquid which in its pure state or as commercially produced or transported will vigorously polymerize, decompose, condense, or will become self-reactive under conditions of shock, pressure, or temperature.

TABLE 13-3

STABLE LIQUIDS--OPERATING PRESSURE 2.5 PSIG or LESS

Type of Tank	Protection	Minimum Distance in Feet from Property Line Which Is or Can Be Built Upon, Including the Opposite Side of a Public Way, and Shall Not Be Less Than 5 Feet	Minimum Distance in Feet from Nearest Side of Any Public Way or from Nearest Important Building on the Same Property and Shall Not Be Less Than 5 Feet
Floating Roof[1]	Protection for Exposure[2]	1/2 times diameter of tank	1/2 times diameter of tank
	None	Diameter of tank but need not exceed 175 ft.	1/2 times diameter of tank
Vertical with Weak Roof to Shell Seam[3]	Approved foam or inerting system[4] on tanks not exceeding 150 ft. in diameter[5]	1/2 times diameter of tank	1/2 times diameter of tank
	Protection for Exposures[2]	Diameter of tank	1/2 times diameter of tank
	None	2 times diameter of tank but need not exceed 350 ft.	1/2 times diameter of tank
Horizontal and Vertical with Emergency Relief Venting to Limit Pressures to 2.5 psig	Approved inerting system[4] on the tank or approved foam system on vertical tanks	1/2 times Table 13-7	1/2 times Table 13-7
	Protection for Exposures[2]	Table 13-7	Table 13-7
	None	2 times Table 13-7	Table 13-7

Footnotes and source on following page.

TABLE 13-3 Continued

---

1 Aboveground tank which incorporates either: (1) a pontoon or double deck metal floating roof in an open top tank in accordance with API Standard 650; or (2) a fixed metal roof with ventilation at the top and roof eaves in accordance with API Standard 650 and containing a metal floating roof or cover meeting the requirements of (1) or a metal floating cover supported by liguid-tight metal pontoons or floats capable of providing sufficient buoyancy to prevent sinking of the cover when half of the pontoons or floats are punctured.

2 Fire protection for structure on property adjacent to liquid storage shall be acceptable when located: (1) within the jurisdiction of any public fire department; or (2) adjacent to plants having private fire brigades capable of providing cooling water streams on structures on property adjacent to liquid storage.

3 Aboveground storage tank with some form of construction or device that will relieve excessive internal pressure caused by fires. Construction shall take the form of a weak roof-to-shelf seam to fail preferential to any other seam.

4 See NFPA 69, Explosion Prevention Systems.

5 For tanks over 150 feet in diameter, use "Protection for Exposures" or "None" as applicable.

SOURCE: Table 2-1, "(NFPA) 30: Flammable and Combustible Liquids Code 1984."

SI Units: 1 foot = 0.30 meters.

TABLE 13-4

STABLE LIQUIDS--OPERATING PRESSURE GREATER THAN 2.5 PSIG

Type of Tank	Protection	Minimum Distance in Feet from Property Line Which Is or Can Be Built Upon, Including the Opposite Side of a Public Way	Minimum Distance in Feet from Nearest Side of Any Public Way or from Nearest Important Building on the Same Property
ANY TYPE	Protection for Exposures[1]	1-1/2 times Table 13-7 but shall not be less than 25 feet	1-1/2 times Table 13-7 but shall not be less than 25 feet
	None	3 times Table 13-7 but shall not be less than 50 feet	1-1/2 times Table 13-7 but shall not be less than 25 feet

1 Fire protection for structures on property adjacent to liquid storage shall be acceptable when located: (1) within the jurisdiction of any public fire department; or (2) adjacent to plants having private fire brigades capable of providing cooling water streams on structures on property adjacent to liquid storage.

SOURCE: Table 2-2, "(NFPA) 30: Flammable and Combustible Liquids Code 1984."

SI Units: 1 ft. = 0.30 m.

TABLE 13-5

BOIL-OVER LIQUIDS

Type of Tank	Protection	Minimum Distance in Feet from Property Line Which is or Can Be Built Upon, Including the Opposite Side of a Public Way and Shall Not be Less than 5 Feet	Minimum Distance in Feet from Nearest Side of Any Public Way or from Nearest Important Building on the Same Same Property and Shall Not be Less than 5 Feet
Floating Roof[1]	Protection for Exposure[2]	1/2 times diameter of tank	1/6 times diameter of tank
	None	Diameter of tank	1/6 times diameter of tank
Fixed Roof	Approved Foam Or Inerting System[3]	Diameter of tank	1/3 times diameter of tank
	Protection for Exposure[2]	1/2 times diameter of tank	2/3 times diameter of tank
	None	Diameter of tank	2/3 times diameter of tank

1 See definition, footnote 1, Table 13-3.

2 Fire protection for structures on property adjacent to liquid storage shall be acceptable when located: (1) within the jurisdiction of any public fire department; or (2) adjacent to plants having private fire brigades capable of providing cooling water streams on structures on property adjacent to liquid storage.

3 See NFPA 69, "Explosion Prevention Systems."

Source: Table 2-3, "(NFPA) 30: Flammable and Combustible Liquids Code 1984."

SI Units: 1 ft. = 0.30 m.

TABLE 13-6

UNSTABLE LIQUIDS

Type of Tank	Protection	Minimum Distance in Feet from Property Line Which Is or Can Be Built Upon, Including the Opposite Side of a Public Way	Minimum Distance in Feet from Nearest Side of Any Public Way or From Nearest Important Building on the Same Property
Horizontal and Vertical Tanks with Emergency Relief Venting to Permit Pressure Not in Excess of 2.5 psig	Tank protected with any one of the following: approved water spray; approved inerting;[1] approved insulation and refrigeration; and approved barricade	Table 13-7 but not less than 25 feet	Not less than 25 feet
	Protection for Exposures[2]	2-1/2 times Table 13-7 but not less than 50 feet	Not less than 50 feet
	None	5 times table 13-7 but not less than 100 feet	Not less than 100 feet

1 See "NFPA 69, Explosion Prevention Systems."

2 Fire protection for structures on property adjacent to liquid storage shall be acceptable when located: (1) within the jurisdiction of any public fire department; or (2) adjacent to plants having private fire brigades capable of providing cooling water streams on structures on property adjacent to liquid storage.

SOURCE: Table 2-4, "(NFPA) 30: Flammable and Combustible Liquids Code 1984."

SI Units: 1 ft. = 0.30 m.

Continued on next page.

TABLE 13-6 Continued

Type of Tank	Protection	Minimum Distance in Feet from Property Line Which Is or Can Be Built Upon, Including the Opposite Side of a Public Way	Minimum Distance in Feet from Nearest Side of Any Public Way or from Nearest Important Building on the Same Property
Horizontal and Vertical Tanks with Emergency Relief Venting to Permit Pressure Over 2.5 psig	Tank protected with any one of the following: approved water spray; approved inerting;[1] approved insulation and refrigeration; and approved barricade	2 times Table 13-7 but not less than 50 feet	Not less than 50 feet
	Protection for Exposures[2]	4 times Table 13-7 but not less than 100 feet	Not less than 100 feet
	None	8 times table 13-7 but not less than 150 feet	Not less than 150 feet

TABLE 13-7

CLASS IIIB LIQUIDS

Capacity (Gallons)	Minimum Distance in Feet from Property Line Which Is or Can Be Built Upon, Including the Opposite Side of a Public Way	Minimum Distance in Feet from Nearest Side of Any Public Way or from Nearest Important Building on the Same Property
12,000 or Less	5	5
12,001 to 30,000	10	5
30,001 to 50,000	10	10
50,001 to 100,000	15	10
100,001 or More	15	15

SI Units: 1 ft. = 0.3048 m; 1 gal. = 3.785 L.

Source: Table 2-5, "(NFPA) 30: Flammable and Combustible Liquids Code 1984." Update of the 1977 and 1981 editions.

TABLE 13-8

REFERENCE TABLE FOR USE IN TABLES 13-1, 13-3, AND 13-4

Tank Capacity (Gallons)	Minimum Distance in Feet from Property Line Which Is or Can Be Built Upon, Including the Opposite Side of a Public Way	Minimum Distance in Feet from Nearest Side of Any Public Way or from Nearest Important Building on the Same Property
275 or Less	5	5
276 to 750	10	5
751 to 12,000	15	5
12,001 to 30,000	20	5
30,001 to 50,000	30	10
50,001 to 100,000	50	15
100,001 to 500,000	80	25
500,001 to 1,000,000	100	35
1,000,001 to 2,000,000	135	45
2,000,001 to 3,000,000	165	55
3,000,001 or More	175	60

Source: Table 2-5, "(NFPA) 30: Flammable and Combustible Liquids Code 1984." Update of the 1977 and 1981 editions.

13.3 INCOMPATIBLE WASTES

Citation

Section 264.199 contains the special requirements for handling potentially incompatible wastes. As stated in this section, these requirements apply to all precautionary measures for the entire tank system:

(a) Incompatible wastes, or incompatible wastes and materials, must not be placed in the same tank system, unless §264.17(b) is complied with.

(b) Hazardous waste must not be placed in a tank system that has not been decontaminated and that previously held an incompatible waste or material, unless §264.17(b) is complied with.

The requirements of Sec. 264.17(b) (detailed in Figure 13-2) are that precautionary measures be instituted to ensure that all incompatible, reactive, or ignitable wastes treated, stored, or disposed of at a facility do not react to produce a hazardous reaction consequence (e.g., explosion, toxic gas generation, violent polymerization, etc.). Waste compatibility characteristics must be determined for these reactions to be avoided. If a waste is to be stored in an unwashed tank that contained a chemical with which the waste is considered incompatible, appropriate decontamination procedures must be performed to avoid a hazardous reaction consequence.

Guidance

Specific precautionary measures must be followed in the handling and/or storage of potentially incompatible hazardous wastes in order to prevent or reduce the chances of an adverse reaction. Combining or mixing of incompatible hazardous wastes can produce reactions or reaction products that have the potential to harm human health, or the environment. These hazardous reaction consequences have been compiled into eight classes, listed in document Section 13.1.

Wastes are not necessarily incompatible when they react with each other. Reactions involving neutralization or dissolution of one substance by another, such as metals dissolved by acid, are generally not considered to be incompatible. If, however, such reactions result in fires or explosions or generate toxic substances in amounts sufficient to endanger public health, safety, and the environment, they are regarded as incompatible.

If conclusive information is not available on the compatibility of two wastes, a controlled trial mixing of the wastes in small amounts can be used to determine potential consequences. In general, the following steps should be used at a facility to determine waste compatibility:

1. Request from the generator as much information as possible about a waste, since the information required on a waste manifest is very general and of little use in determining compatibility.

2. If a waste has not been handled previously at a facility, analyze a representative sample of it. The information obtained through waste analysis should substantiate the generator's information and determine if additional information is needed.

3. Use the information on waste composition gathered in Steps 1 and 2 in conjunction with other available information on chemical constituents to determine waste compatibility. If the information is not conclusive, potential consequences of mixing the wastes should be determined through trial tests.

The quantity of a sample to be used for trial mixing depends on individual circumstances. Samples should be of sufficient size to produce clearly discernible effects upon mixing. The samples must, however, be sufficiently small to assure that any reaction can be controlled.

One can determine the extent of upper and lower explosive limits for flammable gases by carefully observing upward flame propagation through a cylindrical tube. The amounts of toxic gases produced as a result of a

reaction may be discovered by gas chromatography for organics and by specific ion electrodes for many inorganic gases in solution.

One method for quickly detecting the evolution of toxic gases involves the use of detector tubes, a variety of which are commercially available. To determine if toxic gases are produced by the reaction being tested, the gas is aspirated through a detector tube for the specific gas. A change of color in the tube indicates the presence of a particular gas. The gas concentration is proportional to the length of the changed color in the tube. A single tube can detect the presence of more than 20 gases.

The mixing of two wastes for which only limited information is available, however, can result in highly violent and dangerous reactions. Safety precautions must therefore be taken to protect laboratory personnel. The precautions include wearing fire/explosion protective clothing with safety glasses and working in fire/explosion resistant surroundings. Safety showers, eye-wash stations, and first-aid kits should be available. All personnel should be familiar with fire and emergency procedures.

The reactions between two wastes in a small-scale test may not accurately reflect the results of large-scale mixing. In large-scale operations, reactions that appeared insignificant or were undetectable in the laboratory can have significant consequences (such as generation of large amounts of heat or toxic fumes). Thus, extreme care and adequate safety precautions should always be used when mixing or treating large quantities of hazardous waste.

In addition to laboratory testing of compatibility, an analytical method has been developed to determine waste compatibility. This method uses a binary combination of chemical classes to predict the likely reaction consequence of combining chemicals from two different classes at standard temperature and pressure. The EPA's Municipal Environmental Research Laboratory publication, "Design and Development of a Hazardous Waste Reactivity Testing Protocol" (NTIS number PB8-4158807, 1984), details laboratory procedures to classify an unknown waste into a reactivity class.

Classes of chemical compounds are listed in Table 13-9. Compounds are classified according to similar molecular structure (classes 1-31) and similar reactivity characteristics (classes 32-38). In Table 13-10, a representative list of chemicals for each class is provided. If further chemical identification is necessary, it may be obtained from the following sources:

- "Dangerous Properties of Industrial Materials," 6th ed. (Sax, 1984);
- "The Merck Index," 10th ed. (Merck, 1983);
- "A Method for Determining the Compatibility of Hazardous Wastes" (Hatayama et al., 1980); EPA-600/2-80-076, April 1980, US EPA Office of Research and Development (soon to be released by ASTM as a standard);
- "A Compatibility Guide for Regulated Chemical Substances and Underground Storage Tanks," Draft Technical Report for USEPA Office of Solid Waste, Contract No. 68-0-7053; Jacobs Engineering Group; December 20, 1985;
- "Proposed Guide for Estimating the Incompatibility of Selected Hazardous Wastes Based on Binary Chemical Reactions"; ASTM D-34 Proposal P-168, 1986;
- "Guide and Procedures Manual" (MD489/D335), Toxic Substance Storage Tank Containment Assurance and Safety Program, State of Maryland, Department of Health and Mental Hygiene, Office of Environmental Programs, Baltimore, MD, September 1983;
- Online chemical databases such as OHMTADS, CHEMTREC, CIS and TOXLINE;
- Chemical manufacturer;
- Waste generator; and
- Manifests that accompany a waste.

Using the hazardous waste compatibility matrix illustrated in Figure 13-3, one can determine, in advance, the potential for an incompatibility reaction. In this manner, the user can avoid mixing two incompatible wastes and/or can develop a method of tank decontamination that lessens the likelihood of such a reaction. It is important to note, however, that the matrix assumes the chemicals to be of 100 percent concentration at standard temperature (25°C) and pressure (760 mm Hg). Changes in these conditions are likely to affect the degree and type of chemical reaction(s). Another drawback of this method is that incompatibility reactions involving more than two chemicals are not ascertainable using the Figure 13-3 matrix.

TABLE 13-9

LIST OF CHEMICAL CLASSES

Chemical Class Number	Class Name
1	Acids, mineral, non-oxidizing
2	Acids, mineral, oxidizing
3	Acids, organic
4	Alcohols and glycols
5	Aldehydes
6	Amides
7	Amines, aliphatic and aromatic
8	Azo compounds, diazo compounds and hydrazines
9	Carbamates
10	Caustics
11	Cyanides
12	Dithiocarbamates
13	Esters
14	Ethers
15	Fluorides, inorganic
16	Hydrocarbons, aromatic
17	Halogenated organics
18	Isocyanates
19	Ketones
20	Mercaptans and other organic sulfides
21	Metal compounds, inorganic
22	Nitrides
23	Nitrites
24	Nitro compounds
25	Hydrocarbons, aliphatic, unsaturated
26	Hydrocarbons, aliphatic, saturated
27	Peroxides and hydroperoxides, organic
28	Phenols and cresols
29	Organophosphates, phosphothioates, and phosphodithioates
30	Sulfides, inorganic
31	Epoxides
32	Combustible and flammable materials
33	Explosives
34	Polymerizable compounds
35	Oxidizing agents, strong
36	Reducing agents, strong
37	Water and mixtures containing water
38	Water reactive substances

Source: "A Method for Determining the Compatibility of Hazardous Wastes" (Hatayama et al., 1980).

TABLE 13-10

LIST OF CHEMICAL REPRESENTATIVES BY CLASS

Class 1 Acids, mineral, non-oxidizing

Boric Acid
Chlorosulfonic Acid
Hydriodic Acid
Hydrobromic Acid
Hydrochloric Acid
Hydrocyanic Acid
Hydrofluoric Acid
Hydroidic Acid
Phosphoric Acid

Class 2 Acids, mineral, oxidizing

Chloric Acid
Chromic Acid
Nitric Acid
Oleum
Perchloric Acid
Sulfuric Acid
Sulfur Trioxide

Class 3 Acids, organic (All Isomers)

Acetic Acid
Benzoic Acid
Formic Acid
Lactic Acid
Maleic Acid
Oleic Acid
Salycilic Acid
Phthalic Acid

Class 4 Alcohols and glycols (All Isomers)

Allyl Alcohol
Chlorethanol
Cyclohexanol
Ethanol
Ethylene Chlorohydrin
Ethylene Glycol
Ethylene Glycol Monomethyl Ether
Glycerin
Methanol
Monoethanol Amine

Class 5 Aldehydes (All Isomers)

Acetaldehyde
Formaldehyde
Furfural

Class 6 Amides (All Isomers)

Acetamide
Diethylamide
Dimethylformamide

Class 7 Amines, aliphatic and aromatic (All Isomers)

Aminoethanol
Aniline
Diethylamine
Diamine
Ethylenendiamine
Methylamine
Monoethylanolamine
Pyridine

Class 8 Azo compounds, diazo compounds and hydrazines

Dimethyl Hydrazine
Hydrazine

Class 9 Carbamates

Class 10 Caustics

Ammonia
Ammonium Hydroxide
Calcium Hydroxide
Sodium Carbonate
Sodium Hydroxide
Sodium Hypochlorite

Class 11 Cyanides

Hydrocyanic Acid
Potassium Cyanide
Sodium Cyanide

Continued on next page.

TABLE 13-10 Continued

Class 12 Dithiocarbamates

Class 13 Esters (All Isomers)

Butyl Acetate
Ethyl Acetate
Methyl Acrylate
Methyl Formate
Dimethyl Phthalate
Propiolaetone

Class 14 Ethers (All Isomers)

Dichloroethyl Ether
Dioxane
Ethylene Glycol Monomethyl Ether
Furan
Tetrahydrofuran

Class 15 Fluorides, inorganic

Aluminum Fluoride
Ammonium Fluoride
Fluorosilicic Acid
Fluosilic Acid
Hydrofluorosilicic Acid

Class 16 Hydrocarbons, aromatic (All Isomers)

Benzene
Cumene
Ethyl Benzene
Naphthalene
Styrene
Toluene
Xylene

Class 17 Halogenated organics (All Isomers)

Aldrin
Benzyl Chloride
Carbon Tetrachloride
Chloroacetone
Chlorobenzene

Class 17 Halogenated organics (All Isomers) (Continued)

Chlorocresol
Chloroethanol
Chloroform
Dichloroacetone
Dichloroethylether
Dichloromethane (Methylene Dichloride)
Epichlorohydrin
Ethylene Chlorohydrin
Ethylene Dichloride
Freons
Methylchloride
Pentachlorophenol
Tetrachloroethane
Trichloroethylene

Class 18 Isocyanates (All Isomers)

Class 19 Ketones (All Isomers)

Acetone
Acetophenone
Cyclohexanone
Dimethyl Ketone
Methyl Ethyl Ketone
Methyl Isobutyl Ketone
Quinone (Benzoquinone)

Class 20 Mercaptans and other organic sulfides (All Isomers)

Carbon Disulfide
Ethyl Mercaptan

Class 21 Metal compounds, inorganic

Aluminum Sulfate
Chromic Acid
Silver Nitrate
Tetraethyl Lead
Zinc Chloride

Continued on next page.

TABLE 13-10 Continued

Class 22 Nitrides

Class 23 Nitrites

Acrylonitrile

Class 24 Nitro compounds (All Isomers)

Nitrobenzene
Nitrophenol
Nitropropane
Nitrotoluene
Picric Acid

Class 25 Hydrocarbons, aliphatic, unsaturated (All Isomers)

Butadiene
Styrene

Class 26 Hydrocarbons, aliphatic, saturated

Butane
Cyclohexane

Class 27 Peroxides and hydroperoxides, organic

Benzoyl Peroxide
Hydrogen Peroxide
Chlorocresol
Coal Tar
Cresol
Creosote

Class 28 Phenols and cresols

Hydroquinone
Nitrophenol
Phenol
Picric Acid
Resorcinol

Class 29 Organophosphates, phosphothioates, and phosphodithioates

Malathion
Parathion

Class 30 Sulfides, inorganic

Class 31 Epoxides

Epichlorohydrin

Class 32 Combustible and flammable materials

Diesel Oil
Gasoline
Kerosene
Naphtha
Turpentine

Class 33 Explosives

Benzoyl Peroxide
Picric Acid

Class 34 Polymerizable compounds

Acrylonitrile
Butadiene
Methyl Acrylate
Styrene

Class 35 Oxidizing agents, strong

Chloric Acid
Chromic Acid
Silver Nitrate
Sodium Hypochlorite
Sulfur Trioxide

Class 36 Reducing agents, strong

Diamine
Hydrazine

Continued on next page.

TABLE 13-10 Continued

Class 37 Water and mixtures containing water

Aqueous solutions and mixtures
Water

Class 38 Water reactive substances

Acetic Anhydride
Hydrobromic Acid
Sulfuric Acid
Sulfur Trioxide

SOURCE: "A Method for Determining the Compatibility of Hazardous Wastes" (Hatayama et al., 1980).

CTIVITY GROUP	1	2	3	4	5	6	7	8	9	10	11	12	13	14	15	16	17
Mineral, Non-oxidizing	1																
Mineral, Oxidizing		2															
Organic		G H	3														
ls and Glycols	H	H F	H P	4													
des	H P	H F	H P		5												
s	H	H GT				6											
, Aliphatic and Aromatic	H	H GT	H		H		7										
azo Compounds, Hydrazines	H G	H GT	H G	H G	H			8									
nates	H G	H GT						G H	9								
cs	H	H	H		H				H G	10							
ies	GT GF	GT GF	GT GF					G			11						
carbamates	HGF F	HGF F	HGF GT		GF GT		U	H G				12					
	H	H F						H G		H			13				
	H	H F												14			
des, Inorganic	GT	GT	GT												15		
arbons, Aromatic		H F														16	
nated Organics	H GT	H F GT					H GT	H G		H GF	H						17
nates	H G	H GT	H G	H P			H P	H G		H P G	H G	U					
s	H	H F						H G		H	H						
stans, Other Organic Sulfides	GT GF	H F GT						H G									H
Alkal , Alkaline Earth, Elemental	GF H F	GF H F	GF H F	GF H F	GF H F	GF H	GF H	GF H	GF H	GF H	GF H	GF H GT	GF H				H E
Other Elementals, Alloys, Powder, Vapor, or Sponge	GF H F	GF H F	GF					H F GT	U	GF H							H E
Other Elementals, Alloys: Sheets, Rods, Drops, Moldings	GF H F	GF H F						H F G									H F
and Metal Compounds, Toxic	S	S	S			S	S			S							
es	GF HF	H F E	H GF	GF H E	GF H			U	H G	U	GF H	GF H	GF H				GF H
s	HGT GF	H F GT	H							U							
Compounds, Organic		H F GT			H					H E							
carbons, Aliphatic, Unsaturated	H	H F			H												
carbons, Aliphatic, Saturated		H F															
des, Hydroperoxides, Organic	H G	H E		H	H G		H GT	H F E	H F GT		H E GT	H F GT					H E
ls and Creosols	H	H F						H G									
phosphates, Phosphothioates, hodithioates	H GT	H GT						U		H E							
es, Inorganic	GT GF	H F G	GT		H			E									
des	H P	H P	H P	H P	U		H P	H P		H P	H P	U					
stible, Flammable Materials, Misc	H G	H F GT															
sives	H E	H E	H E					H E		H E			H E				
erizable Compounds	P H	P H	P H					P H		P H	P H	U					
ing Agents, Strong	H GT	H		H F	H F	H F GT	H F GT	H E	H F GT		H E G	H F GT	H F	H F		H F	H F
	18	19	20	21	22	23	24	25	26	27	28	29	30	31	32	33	34	101	102	103	104
	H	H																			
	GF H	GF H	GF H																		
	GF H		HGF F																		
		GF H	GF H	E																	
					H P		S	GF H													
				H E GF				HGF E													
					H E																
	H	E	H F GT	H E	P G		H G	HGF E	H P GT				30								
	H			GF H				GF H						31							
				H									U		32						
	H												H GT			33					
			H P	H P	H P		H	H P					H P	H P	U	H P	34				
				H G F				HGF F					H F GT					101			
				H E	H E	H E	E	E					H E	H E		H E	H E	H E	102		
				P H	P H	P H	P H	P H					P H	P H		P H			H E	103	
	HF GT	H F	H F GT	H F E	H F E	H F		H F E	H F GT	H E	H F	H F	H G	H F	H F GT	H F GT	H F G	H F G	H E	H F GT	104

Reactivity Code	Consequences
H	Heat generation
F	Fire
G	Innocuous and non-flammable gas generation
GT	Toxic gas generation
GF	Flammable gas generation
E	Explosion
P	Violent polymerization
S	Solubilization of toxic substances
U	May be hazardous but unknown

Example

H F GT	Heat generation, fire, and toxic gas generation

Figure 13-3

Compatibility Matrix

If several classes of chemicals compose a waste stream, all non-negligible pairs of classes in the two hazardous wastes must be tested using the compatibility matrix process. In cases where the user is unsure of how much of a particular chemical class is present and how significantly this class will affect compatibility, it is best to assume incompatibility and proceed with non-mixture and/or tank washing methods.

If chemical incompatibility is found for an unwashed tank system, decontamination methods should be based on the type of compound found in the unwashed system. Specific methods of decontamination for storage tank systems are outlined in Table 13-11. Decontamination steps begin when a tank has been emptied. A tank system that contained wastes must be rinsed with a solution compatible with the waste residues.

The following hypothetical cases present examples of the method that should be applied to determine chemical compatibility, using the compatibility matrix of Figure 13-3.

Example 1

The receiving tank system previously contained chromic acid. It is now proposed that potassium cyanide be stored in this unwashed tank. Using the information in Table 13-10, it can be determined that chromic acid is in class 35 (strong oxidizing agents) and potassium cyanide is in class 11 (cyanides). The letter abbreviation at the point of intersection in Figure 13-3 indicates the likely reactions: heat generation, as a primary reaction consequence, and explosion and toxic gas generation as a secondary consequence, resulting from the heat generation. It can be concluded that these two wastes are extremely incompatible. In order to be able to store potassium cyanide in this tank, all chromic acid residues must be removed and the tank system fully decontaminated. The method of decontamination will involve draining the tank system, removing any solids, applying a caustic wash, and rinsing with a high-pressure stream of water (see Table 13-11).

Example 2

A no-hazard situation may involve the addition of acetone (class 19, ketones) to a tank system that once contained acetaldehyde (class 5, aldehydes). According to the matrix in Figure 13-3, no reaction consequence is indicated, and the two compounds are considered generally compatible.

13.4 SUMMARY OF MAJOR POINTS

The following summarizes the information covered in this section and should be used to assure the completeness of a Part B permit application.

- Do precautionary measures apply to tanks and all ancillary equipment?
- Has compliance with dissipation of hazard been documented?
- Exempt in emergency situations, have all wastes been treated, mixed, or rendered inert prior to or immediately after placement in the storage tank?
- Do facility design and operating characteristics protect waste from any materials or conditions that may cause ignition or reaction?
- Are treatment and mixture processes waste-specific?
- Does the tank system comply with essential National Fire Protection Association protective distance requirements?
- Mixing of incompatible wastes or placement of waste in a tank system that previously held an incompatible waste are not allowed, unless a hazardous reaction consequence can be prevented.

APPENDIX A

APPENDIX A

COMPLETENESS CHECKLIST

Appendix A contains a checklist of items that may be included in an RCRA Part B permit application. Use of this checklist is not a regulatory requirement. However, its use, or use of a similar document, is strongly recommended. Use of the checklist will assist the permit applicant in confirming that he/she is submitting a complete application.

Each required information item is summarized. Regulatory citations are provided that enable quick location of the full text of the regulation for each required item. If no citation is indicated next to a specific item, the last citation indicated above the item contains the regulatory requirement.

APPENDIX A

COMPLETENESS CHECKLIST

Part 270	Part 264	Subject Requirement	Provided	N/A	Location in Application	Comments
270.14(b)(5)		INSPECTIONS				
	264.195(a)	-- Schedule and procedure for overfill controls inspection				
	264.195(b)(1)	-- Daily inspection of aboveground portions of tank system				
	264.195(b)(2)	-- Daily inspection of monitoring and leak-detection data				
	264.195(b)(3)	-- Daily inspection of construction materials, local area, and secondary containment system for signs of erosion or releases				
	264.195(c)(1)	-- Confirm proper operation of the cathodic protection system within six months of initial installation				
		-- Inspect cathodic protection system operation annually thereafter				
	264.195(c)(2)	-- Bimonthly inspection of all sources of impressed current				
270.14(b)(7)		CONTINGENCY PLAN PROCEDURES				
	264.196	-- Spill and/or leakage response measures including:				
		-- Immediate removal from service				
	264.196(a)	-- Cessation of use; prevent flow or addition of wastes				
	264.196(b)	-- Removal of waste from tank system or secondary containment system				
	264.196(c)	-- Containment of visible releases to the environment				
	264.196(d)	-- Notification, reports of any releases				
		-- Notification to Regional Administrator of a release within 24 hours				
		-- Report to Regional Administrator of a release within 30 days of the following information:				
		-- Likely route of migration of the release				
		-- Characteristics of the surrounding soil				

APPENDIX A (Continued)

COMPLETENESS CHECKLIST

Part 270	Part 264	Subject Requirement	Provided	N/A	Location in Application	Comments
		-- Results of monitoring/sampling				
		-- Proximity to downgradient drinking water, surface water and population areas				
		-- Description of response actions taken or planned				
	264.196(e)	-- Provision of secondary containment, repair, or closure				
	264.196(f)	-- Certification of major repairs by independent, qualified, registered, professional engineer				
270.14(b)(13)		CLOSURE, POST-CLOSURE CARE & FINANCIAL RESPONSIBILITY				
		TANKS WITH SECONDARY CONTAINMENT				
	264.197(a)	-- Decontamination/Removal procedures during closure for tank systems that can be practicably decontaminated				
	264.197(b)	-- Closure and post-closure care and financial assurance requirements that apply to landfills for tanks that cannot be practicably decontaminated				
		TANKS WITH SECONDARY CONTAINMENT				
	264.197(c)	-- Closure Plan for practicable decontamination/ removal of hazardous releases				
		-- If decontamination/removal of hazardous waste is not practicable				
		-- Contingent closure plan in accordance with landfill requirements				
		-- Contingent post-closure plan in accordance with landfill requirements				
		-- Cost estimate for contingent closure plan in accordance with landfill requirements				
		-- Cost estimate for contingent post-closure plan in accordance with landfill requirements				
		-- Financial assurance for compliance with contingent closure and post-closure plan				

APPENDIX A (Continued)

COMPLETENESS CHECKLIST

Part 270	Part 264	Subject Requirement	Provided	N/A	Location in Application	Comments
270.16(a)		WRITTEN ASSESSMENT OF TANK SYSTEM STRUCTURAL INTEGRITY AND SUITABILITY FOR HANDLING HAZARDOUS WASTE				
	264.191(a)	EXISTING TANK SYSTEMS				
	264.191(b)(1)	-- Existing tank system design standards				
	264.191(b)(2)	-- Hazardous characteristics of the waste				
	264.191(b)(3)	-- Existing corrosion protection measures				
	264.191(b)(4)	-- Documented or estimated age of the tank system				
	264.191(b)(5)	-- Results of a leak test, internal inspection or other tank integrity examination in accordance with Sec. 264.191(b)(5)(i) and (ii)				
	264.192(a)	NEW TANK SYSTEMS				
	264.192(a)(1)	-- New tank system design standards				
	264.192(a)(2)	-- Hazardous characteristics of the waste				
	264.192(a)(4)	-- Protection from vehicular traffic for underground tank system components				
	264.192(a)(5)	-- Full-tank considerations (foundation considerations for a full tank)				
		-- Anchoring				
		-- Saturated zone location				
		-- Seismic fault zone location				
		-- Frost-heave considerations				
270.16(b)		TANK DIMENSIONS AND CAPACITY OF EACH TANK				
270.16(c)		DESCRIPTION OF TANK AUXILLARY SYSTEMS				
		-- Feed system(s)				
		-- Safety cutoff and/or bypass systems				
		-- Process flow				
270.16(d)		DIAGRAM OF PIPING, INSTRUMENTATION, AND PROCESS FLOW				

APPENDIX A (Continued)

COMPLETENESS CHECKLIST

Part 270	Part 264	Subject Requirement	Provided	N/A	Location in Application	Comments
270.16(e)	264.192(3)	EXTERNAL CORROSION PROTECTION MATERIALS AND EQUIPMENT FOR METAL TANKS OR EXTERNAL METAL COMPONENTS NEW TANK SYSTEMS				
	264.192(3)(i)	-- Corrosion potential assessment				
	264.192(3)(ii)	-- Corrosion protection assessment				
270.16(f)		NEW TANK SYSTEM INSTALLATION				
	264.192(b)	-- Documentation for New Tank System Installation Procedures				
	264.192(c)	-- Backfill				
		-- Material				
		-- Placement				
	264.192(d)	-- Tightness Testing				
		-- Tanks				
		-- Piping				
		-- Repairs				
	264.192(e)	-- Ancillary equipment support and protection				
	264.192(f)	-- Corrosion expert supervises proper installation of field-fabricated corrosion protection				
	264.192(g)	-- Written certifications				
270.16(g)		SECONDARY CONTAINMENT				
	264.193(b)	-- Characteristic properties including:				
		-- Prevention of waste or accumulated liquid migration				
		-- Detection and collection of released waste and accumulated liquid until the collected material is removed				
	264.193(c)	-- Design parameters including:				
		-- Compatibility with contained waste and sufficient strength				
		-- Adequate foundation or base				
		-- Having a leak-detection system that promptly detects releases into containment area				

COMPLETENESS CHECKLIST

Part 270	Part 264	Subject Requirement	Provided	N/A	Location in Application	Comments
		-- Ability to drain and remove any accumulated liquid in containment area				
	264.193(e)	-- Additional requirements including:				
		-- Liners and vaults must have capacity to hold 100% of the design capacity of the largest tank within the containment area				
		-- Liners and vaults must be designed to prevent run-on and infiltration of precipitation into containment area, unless the area has sufficient capacity to hold precipitation from a 25-year, 24-hour rainfall event				
		-- Liner must be free of cracks and gaps and able to cover all surrounding earth likely to come in contact with released waste				
		-- Vault (concrete) constructed as a continuous structure with chemical resistant water stops at all joints; has an interior coating compatible with stored waste; has an exterior moisture barrier to prevent migration of moisture into the vault; and, provided with equipment to protect against the formation and ignition of explosive vapors if the stored waste meets the definition of ignitable waste				
		-- Double-walled tanks must be an integral structure; protected, if metal, from internal and external corrosion; and, provided with a continuous leak-detection system				
	264.193(f)	-- Secondary containment requirements for applicable ancillary equipment				

APPENDIX A (Continued)

COMPLETENESS CHECKLIST

Part 270	Part 264	Subject Requirement	Provided	N/A	Location in Application	Comments
270.16(h)	264.193(g)	TANK SYSTEMS FOR WHICH VARIANCE FROM SECONDARY CONTAINMENT IS SOUGHT				
		-- Based on a demonstration of equivalent protection of ground water and surface water				
		-- Nature and quantity of the wastes				
		-- Proposed alternate design and operation				
		-- Hydrogeologic setting of the facility				
		-- Any other factors that would influence the quality and mobility of hazardous constituents and their potential to migrate				
		-- Based on a demonstration of no substantial present or potential hazard				
		-- Potential adverse effects on ground water, surface water and land quality (general)				
		-- Physical and chemical characteristics of the waste				
		-- Hydrogeological characteristics of the facility				
		-- Potential for health risks caused by human exposure to waste constituents				
		-- Potential for damage to wildlife, crops, vegetation and physical structures caused by exposure to waste constituents				
		-- Persistence and permanence of potential adverse effects				
		-- For specific potential effects on ground water quality, information must be included on:				
		-- Quantity and quality of ground water and ground water flow direction				
		-- Proximity and withdrawal rates of ground-water users				
		-- Current and future uses of ground water in the area				
		-- Existing quality of ground water				

APPENDIX A (Continued)

COMPLETENESS CHECKLIST

Part 270	Part 264	Subject Requirement	Provided	N/A	Location in Application	Comments
		-- For specific potential adverse effects on surface water				
		-- Quantity and quality of surface water and the direction of surface-water flow				
		-- Patterns of rainfall in the region				
		-- Proximity of tank system to surface waters				
		-- Current and future uses of surface waters				
		-- Existing quality of surface water				
		-- For specific potential adverse effects on the surrounding land				
		-- Patterns of rainfall				
		-- Current and future uses of the surrounding land				
	264.193(g)(3)	-- For tank systems where a variance has been granted and a release occurs from the primary tank system				
	264.193(h)	-- Request for Variance Procedures				
		-- Notification of Regional Administrator in writing				
		-- Existing tank systems--at least 24 months prior to date secondary containment must be provided				
		-- New tank systems--at least 30 days prior to entering into a contract for installation				
		-- Description of steps necessary to conduct demonstration and timetable including in accordance with Sec. 264.193(g)(1) or Sec. 264.193(g)(2)				
	264.193(i)	-- Procedures for a tank system prior to such time that full secondary containment is provided				
		-- Non-enterable underground tanks, annual leak tests				
		-- Other than non-enterable underground tanks,				

APPENDIX A (Continued)

COMPLETENESS CHECKLIST

Part 270	Part 264	Subject Requirement	Provided	N/A	Location in Application	Comments
		-- Conduct annual leak test [or] -- Develop schedule and procedure for assessing the overall condition of the tank system				
		-- For ancillary equipment, annual leak test				
		-- Maintain records on file				
		-- If tank system is found to be leaking or unfit-for-use, Sec. 264.196 requirements must be complied with				
270.16(i)	264.194(b)	SPILL AND OVERFILL PREVENTION MEASURES				
		-- Spill prevention control(s)				
		-- Overfill prevention control(s) (e.g., level-sensing devices, high-level alarms, automatic feed cutoff, or bypass to a standby tank)				
		-- Maintenance of freeboard in uncovered tanks				
270.16(j)	264.198	SPECIAL REQUIREMENTS FOR IGNITABLE OR REACTIVE WASTES INCLUDING:				
		-- Treat, render, or mix waste(s) so the resulting material is no longer ignitable or reactive (see Secs. 261.21, and 261.23) and Sec. 264.17(b) is complied with; or,				
		-- Protect waste from material or conditions that may cause it to ignite or react				
		-- Tank system used only for emergencies				
		-- Maintain required distance between waste-management area and public ways and adjoining properties				

APPENDIX A (Continued)

COMPLETENESS CHECKLIST

Part 270	Part 264	Subject Requirement	Provided	N/A	Location in Application	Comments
270.16(j)	264.199	SPECIAL REQUIREMENTS FOR INCOMPATIBLE WASTES INCLUDING:				
		-- Incompatible wastes must not be placed in a tank, unless Sec. 264.17(b) is complied with				
		-- Hazardous waste must not be placed in a tank system that has not been decontaminated and that previously held incompatible waste or material, unless Sec. 264.17(b) is complied with				

APPENDIX B

APPENDIX B

PAINT FILTER LIQUIDS TEST

METHOD 9095

1.0 Scope and Application

1.1 This method is used to determine the presence and/or concentration of free liquids in a representative sample of waste, or to separate the liquid and solid portions of a sample.

1.2 The method is used to determine compliance with 40 CFR 261.21, 261.22, 264.314, and 265.314.

2.0 Summary of Method

2.1 A predetermined amount of material is placed in a paint filter and the free liquid portion of the material is that portion which passes through and drops from the filter.

3.0 Interferences

3.1 Filter media was observed to separate from the filter cone on exposure to alkaline materials. This development causes no problem if the sample is not disturbed.

4.0 Apparatus and Materials

4.1 Conical paint filter - mesh number 60. Available at local paint stores such as Sherwin-Williams and Glidden for an approximate cost of $0.07 each.

4.2 Glass Funnel [If the paint filter, with the waste, cannot sustain its weight on the ring stand, then a fluted glass funnel or glass funnel with a mouth large enough to allow at least one inch of the filter mesh to protrude should be used to support the filter. The funnel is to be fluted or have a large open mouth in order to support the paint filter yet not interfere with the movement, to the graduated cylinder, of the liquid that passes through the filter mesh.]

4.3 Metal Ring or Tripod

4.4 Ring Stand

4.5 Graduated Cylinder, 100 ml.

4.6 Glass Rod, 6"

4.7 Watch Glass (for use if percent free liquid or free liquid portion is desired)

5.0 Reagents

5.1 None.

6.0 Sample Collection, Preservation, and Handling

6.1 All samples must be collected according to the directions in Section One of this manual.

6.2 A 100 ml or 100g representative sample is required for the test. [If it is not possible to obtain a sample of 100 ml or 100g that is sufficiently representative of the waste, the analyst may use larger size samples in multiples of 100 ml or 100g, i.e., 200, 300, 400 ml or g. However, when larger samples are used, analysts shall divide the sample into 100 ml or 100g portions and test each portion separately. If any portion contains free liquids the entire sample is considered to have free liquids. If the percent

of free liquid in the sample needs to be determined, it shall be the average of the sub-samples tested.]

7.0 Procedure

[In order to determine compliance with 40 CFR 264.314 or 265.314 only Steps 7.1 through 7.4 should be used.]

7.1 Assemble test apparatus as shown in Figure 1.

7.2 Place sample in the filter. A funnel may be used to provide support for the paint filter.

7.3 Allow sample to drain for 5 minutes into the graduated cylinder.

7.4 Note any free liquid generated after this five minute period. If any liquids collect in the graduated cylinder then the material is deemed to contain free liquids, for purposes of 40 CFR 264.314 or 265.314.

Continue with Steps 7.5 through 7.7 to determine the percent free liquid or to prepare the liquid phase for further testing, if appropriate.

7.5 Read and record volume of liquid phase in graduated cylinder. Stir sample with glass rod, let stand undisturbed for an additional 15 minutes.

7.6 Read and record volume of liquid phase.

7.7 Calculate % change between the two 15 minute readings. If the difference is less than 10%, the test is complete. If the change is greater than 10%, repeat steps 7.5 through 7.7 until the change between successive readings is less than 10%.

Calculations:

$$\frac{\text{Current Reading (ml)} - \text{Preceding Reading (m.)}}{\text{Preceding Reading (ml)}} \times 100 = \%\ \text{Change}$$

$$\frac{\text{Total Liquid Phase (ml)}}{\text{Sample Size (ml)}} \times 100 = \%\ \text{Free Liquid}$$

8.0 Quality Control

8.1 Duplicate samples should be analyzed on a routine basis.

FIGURE 1. FREE LIQUID APPARATUS

APPENDIX C

APPENDIX C

Synopsis of Pertinent EPA Guidance Manuals

1. "Model Permit for Hazardous Waste Treatment, Storage & Disposal Facilities," USEPA (undated draft). Companion to "Permit Writer's Guidance Manual for Hazardous Waste Land Treatment, Storage and Disposal Facilities," the model permit provides a standard permit format for facilities that store, treat, or dispose of hazardous waste. The model is divided into modules for various types of permit conditions.

2. "Compatibility of Wastes in Hazardous Waste Management Facilities--A Technical Resource Document for Permit Writers," USEPA (November 1982). This manual provides guidance on how to determine the compatibility of hazardous wastes with other wastes and with the various types of structures - tanks, piles, and containers - in which they are stored or treated.

3. "Design & Development of a Hazardous Waste Reactivity Testing Protocol," USEPA (October 1984). The test scheme developed for determining waste compatibility includes a field-test kit, a series of flow diagrams, and a manual for using the flow diagrams and test procedures. It also employs a compatibility chart, which classifies wastes by chemical class and/or general reactive properties, and establishes a series of qualitative test procedures to classify hazardous waste materials according to their gross chemical composition when little or no prior knowledge is available regarding their components. The scheme is organized in a manner such that materials with high reactivity or unusual hazard are identified early in the testing sequence. Chemical composition information is then used to predict which waste materials can safely be mixed before actually performing mix tests.

4. "Permit Applicant's Guidance Manual for the General Facility Standards," USEPA, SW968 (October 1983). Guidance for permit applicants that addresses general information requirements of 40 CFR Sec. 270.14(b) (1-12, 19) and the Sec. 264 standards referenced by those requirements for Part B applications.

5. "RCRA Permit Writer's Manual for Ground Water Protection (40 CFR 264F)," USEPA (October 1983). Provides a comprehensive examination of items covering ground water protection requirements for permit writers to examine when reviewing Part B applications.

6. "Permit Applicant's Guidance Manual for Exposure Information Requirements Under RCRA Section 3019," USEPA (1985). This document was developed for owners and operators of hazardous waste landfills and surface impoundments which are subject to permitting under the Resource Conservation and Recovery Act (RCRA). It provides guidance for submitting information on the potential for public exposure to hazardous wastes, as required by Section 3019 of RCRA, which was established by the 1984 Hazardous and Solid Waste Amendments to RCRA.

7. "Alternate Concentration Limit Guidance Based on Section 264.94(b) Criteria, Part I, Information on ACL Demonstrations," USEPA (June 1985). This document provides guidance to RCRA facility permit applicants and writers concerning the establishment of alternate concentration limits (ACLs).

8. "Draft Guidance for Subpart G Closure and Post Closure Care Standards and Subpart H Cost Estimating Requirements," USEPA (to be published in Fall of '86) outlines procedures for TSDF's for complying with regulatory requirements for closure and post closure care.

APPENDIX D

APPENDIX D

Technical Guidance Documents

1. "Technology for the Storage of Hazardous Liquids--A State-of-the-Art Review," by Fred C. Hart, Associates, for the New York State Department of Environmental Conservation (January 1983). This manual is a compilation of much of the latest information on underground and aboveground storage systems and on state-of-the-art equipment available for storing and handling hazardous liquids in tanks. Included is a discussion on the technology and practices for storage of petroleum and other hazardous liquids which could be accidentally released into the environment. Among the topics covered are: design features; piping systems; spill containment systems; spills and overfill prevention systems; leak and spill monitoring; and testing and inspection for both underground and aboveground tanks.

2. "Recommended Practices for Underground Storage of Petroleum," by Fred C. Hart Associates for the New York State Department of Environmental Conservation (May 1984). This manual provides specific guidance for the underground storage of petroleum and petroleum-derivative liquids. The manual is intended for engineers, inspectors, and owners who are designing or upgrading their underground facilities for leak and spill prevention. Specific guidance includes: (1) design of tanks and piping systems; (2) installation of underground storage tanks; (3) secondary containment; (4) leak detection; (5) overfill protection and transfer spill prevention; (6) tightness testing; (7) storage tank rehabilitation; and (8) closure of underground storage facilities.

3. "Lining of Waste Impoundment and Disposal Facilities," by Matrecom, Incorporated, for the USEPA (September 1980). Based upon the current state of the art of liner technology, this report provides information on performance, selection, and installation of specific liners and cover materials for various disposal situations. It characterizes wastes, waste fluids, lining materials, and lining technology. It further describes the

effects various wastes have on liners; liner service life and failure mechanisms; installation problems; cost information; and tests that are essential for preinstallation and monitoring surveys.

APPENDIX E

APPENDIX E

Tank-Specific Definitions

When used in 40 Part 264, Subpart J (as revised July 14, 1986), the terms in this manual have the following meanings:

"**Aboveground Tank**" (AGT) means a device meeting the definition of "tank" as set forth in Sec. 260.10 that is situated in such a way that the entire surface area of the tank is completely above the plane of the adjacent surrounding surface and the entire surface area of the tank (including the tank bottom) can be visually inspected.

"**Acutely Hazardous Waste**" meets the following criteria, as defined in 40 CFR 261.10:

> It has been found to be fatal to humans in low doses or, in the absence of data on human toxicity, it has been shown in studies to have an oral LD 50 toxicity (rat) of less than 50 milligrams per kilogram, an inhalation LC 50 toxicity (rat) of less than 2 milligrams per liter, or a dermal LD 50 toxicity (rabbit) of less than 200 milligrams per kilogram or is otherwise capable of causing or significantly contributing to an increase in serious irreversible, or incapacitating reversible, illness.

"**Ancillary equipment**" means any device including, but not limited to, such devices as piping, fittings, flanges, valves and pumps, that is used to distribute, meter, or control the flow of hazardous waste from its point of generation to storage or treatment tank(s), between hazardous waste storage and treatment tanks to a point of disposal on-site, or to a point of shipment for disposal off-site.

"**Aquifer**" means a geologic formation, group of formations, or part of a formation capable of yielding a significant amount of ground water to wells or springs.

"**Certification**" means a statement of professional opinion based upon knowledge and belief.

"**Component**" means either the tank or ancillary equipment of a tank system.

"**Corrosion expert**" means a person who, by reason of his knowledge of the physical sciences and the principles of engineering and mathematics, acquired by a professional education and related practical experience, is qualified to engage in the practice of corrosion control on buried or submerged metal piping systems and metal tanks. Such a person must be certified as being qualified by the National Association of Corrosion Engineers (NACE) or be a registered professional engineer who has certification or licensing that includes education and experience in corrosion control on buried or submerged metal piping systems and metal tanks.

"**Existing tank system**" or "**existing component**" means a tank system or component that is used for the storage or treatment of hazardous waste and is in operation, or the installation of which has begun, on or prior to the effective date of the regulations (July 14, 1986). Installation will be considered to have commenced if the owner or operator has obtained all federal, state, and local approvals or permits necessary to begin physical construction of the site or installation of the tank system, and if either: (1) a continuous on-site physical construction or installation program has begun; or (2) the owner or operator has entered into contractual obligations--which cannot be cancelled or modified without substantial loss--for physical construction on the site or installation of the tank system scheduled to be completed within a reasonable time.

"**Facility**" means all contiguous land, structures, appurtenances, and improvements on the land used for treating, storing, or disposing of hazardous waste. A facility may consist of several treatment, storage, or disposal operational units (e.g., one or more landfills, surface impoundments, or combinations of them).

"**Freeboard**" means the vertical distance between the top of a tank, or surface impoundment dike, and the surface of the waste contained therein.

"**Groundwater**" means water below the land surface in a zone of saturation.

"**Incompatible waste**" means a hazardous waste which is unsuitable for: (1) placement in a particular device or facility because it may cause corrosion or decay of containment materials (e.g., container inner liners or tank walls); or (2) co-mingling with another waste or material under uncontrolled conditions because the co-mingling might produce heat or pressure, fire or explosion, violent reaction, toxic dusts, mists, fumes or gases, or flammable fumes or gases.

"**Inground tank**" (IGT) means a device meeting the definition of "tank" set forth in Sec. 260.10 that has a portion of the tank wall situated to any degree on or within the ground, thereby preventing expeditious visual inspection of the surface area of the tank that is on or in the ground.

"**Installation inspector**" means a person who, by reason of his knowledge of the physical sciences and the principles of engineering, acquired by a professional education and related practical experience, is qualified to supervise the installation of tank systems.

"**Leak-detection system**" means a system capable of detecting either the failure of the primary or secondary containment structure or the presence of hazardous waste or accumulated liquid in the secondary containment structure. Such a system must employ operational controls (e.g., daily visual inspections for releases into the secondary containment system of aboveground tanks) or consist of an interstitial monitoring device designed to detect continuously and automatically the failure of the primary or secondary containment structure or the presence of a release of hazardous waste into the secondary containment structure.

"**New tank system**" or "**new tank component**" means a tank system or component that will be used for the storage or treatment of hazardous waste and for which installation has commenced after January 12, 1987. However, for the purposes of Secs. 264.193(g)(2) and 265.193(g)(2), a new tank system is one for which construction commences after January 12,1987. (See also "existing tank system.")

"**Onground tank**" means a device meeting the definition of "**tank**" in Sec. 260.10 that is situated in such a way that the bottom of the tank is on the same level as the adjacent surrounding surface so that its external tank bottom cannot be visually inspected.

"**Sump**" means any pit or reservoir that meets the definition of tank, and those troughs/trenches connected to it that serve to collect hazardous waste for transport to hazardous waste storage, treatment, or disposal facilities.

"**Tank**" means a stationary device, designed to contain an accumulation of hazardous waste, which is constructed primarily of non-earthen materials (e.g., wood, concrete, steel, plastic) which provide structural support.

"**Tank system**" means a hazardous waste storage or treatment tank and its associated ancillary equipment and containment system.

"**Underground tank**" (UGT) means a device meeting the definition of "**tank**" set forth in Sec. 260.10, whose entire surface area is wholly submerged within the ground (i.e., totally below the surface of and covered by the ground).

"**Unfit-for-use tank system**" means a tank system that has been determined through an integrity assessment or other inspection to be no longer capable of storing or treating hazardous waste without posing a threat of hazardous waste release to the environment.

"**Zone of engineering control**" means an area under the control of the owner or operator that, upon detection of a hazardous waste release, can be readily cleaned up prior to the release of hazardous waste or hazardous constituents to ground water or surface water.

APPENDIX F

Appendix F

FIGURE SOURCES

FIGURE	TITLE	PAGE	SOURCE
	SECTION 5.0 TANK DESIGN		
5-1	Tank Dimensions	5-3	American Petroleum Institute, Specification 12D, "Field Welded Tanks for Storage of Production Liquids" 9th ed. (January 1982),.p.8.
5-2	Tank Dimensions (cont.)	5-4	Fred C. Hart Associates, Inc.
5-3	Tank Dimensions (cont.)	5-5	Fred C. Hart Associates, Inc.
5-4	Piping Details for Suction or Submerged Pumps	5-20	American Petroleum Institute, Publication No. 1615, "Installation of Underground Petroleum Storage Systems" (November 1979), p.11.
5-5	Elements of an Underground Storage Facility	5-21	Fred C. Hart Associates, Inc.
5-6	Aboveground Tank System Connections	5-22	American Petroleum Institute, Publication No. RP 12Ra, "Recommended Practices for Setting, Connecting, Maintenance, and Operation of Lease Tanks" (1981).
5-7	Corrosion Mechanisms	5-27	New York State Department of Environmental Conservation, "Technology for the Storage of Hazardous Liquids - A State-of-the-Art Review" (January 1983), p. 15.
5-8	Corrosion Mechanisms (cont.)	5-28	New York State Department of Environmental Conservtion, "Technology for the Storage of Hazardous Liquids - A State-of-the-Art Review" January, (1983), p. 16.

Appendix F (Continued)

FIGURE SOURCES

FIGURE	TITLE	PAGE	SOURCE
5-9	Sacrificial-Anode Cathodic Protection	5-43	"Suggested Ways to Meet Corrosion Protection Codes for Underground Tanks and Piping" Detroit, Michigan: (The Hinchman Company).
5-10	Factory-Installed Sacrificial-Anode	5-44	U.S. Environmental Protection Agency, Office of Solid Waste, "Interim Prohibition: Guidance for Design and Installation of New Underground Storage Tanks" (August 1985 Draft) p. I-11.
5-11	Impressed-Current Cathodic-Protection	5-46	Fred C Hart Associates, Inc.
5-12	Anchoring Techniques	5-50.	Petroleum Equipment Institute, Publication No. PEI/RP100-85, "Recommended Practices for Installation of Underground Liquid Storage Systems (undated draft) p. 11.

SECTION 6.0 INSTALLATION

6-1	Proper Tank Lifting and Placement	6-5	Fred C. Hart Associates, Inc.
6-2	Excavation Design: Recommended Distance from the Nearest Foundation	6-8	Petroleum Equipment Institute, "Recommended Practices for Installation of Underground Liquid Storage Systems," 1986, p. 5.
6-3	Excavation	6-9	U.S. Environmental Protection Agency, Office of Solid Waste, "The Interim Prohibition: Guidance For Design and Installation of Underground Storage Tanks," (August 1985 Draft), pp. 2-3.

Appendix F (Continued)

FIGURE SOURCES

FIGURE	TITLE	PAGE	SOURCE
6-4	Tank Installation Checklist	6-10	Fred C. Hart Associates, Inc.
6-5	Backfill	6-16	U.S. Environmental Protection Agency, Office of Solid Waste, "The Interim Prohibition: Guidance for Design and Installation of Underground Storage Tanks," (August 1985 Draft), p. 2-3.
6-6	Partially Buried Vertical Hazardous Waste Tank with Secondary Containment	6-24	Fred C. Hart Associates, Inc.
6-7	Underground Tank and Piping System	6-25	U.S. Environmental Protection Agency, Office of Solid Waste, "The Interim Prohibition: Guidance for Design and Installation of Underground Storage Tanks," (August 1985 Draft), pp. 1-10.
6-8	Aboveground Tank	6-26	Fred C. Hart Associates, Inc.

SECTION 7.0 SECONDARY CONTAINMENT

7-1	Typical Observation Well Installation	7-13	Adapted from New York State Department of Environmental Conservation, "Technology for the Storage of Hazardous Liquids - A State-of-the-Art Review"(January, 1983).
7-2	Typical U-Tube Placement	7-14	Adapted from New York State Department of Environmental Conservation, "Technology for the Storage of Hazardous Liquids - A State-of-the-Art Review" (January, 1983).
7-3	Detail: Secondary Containment for Aboveground Tank	7-20	Fred C. Hart Associates, Inc.

Appendix F (Continued)

FIGURE SOURCES

FIGURE	TITLE	PAGE	SOURCE
7-4	Tank With External Liner	7-22	Fred C. Hart Associates, Inc.
7-5	New Aboveground Tank	7-23	Fred C. Hart Associates, Inc.
7-6	Multiple Tanks in a Vault	7-24	U.S. Environmental Protection Agency, Office of Solid Waste, "Interim Prohibition: Guidance for Design and Installation of New Underground Storage Tanks" (August 1985 Draft), p. I-24
7-7	Double-Walled Tank Configurations	7-25	U.S. Environmental Protection Agency, Office of Solid Waste, "Interim Prohibition: Guidance for Design and Installation of New Underground Storage Tanks" (August 1985 Draft), P. I-19.
7-8	Cross Sectional View of a Double-Walled Tank	7-26	Fred C. Hart Associates, Inc.
7-9	Typical Earthen Dike Construction	7-28	Petroleum Association for Conservation of the Canadian Environment, (Handling Committee, PACE Report No. 80-3, PACE Product Storage and Handling Committee, Ottawa, Canada, 1980) "Bulk Plant Design Guidelines for Oil Spill Prevention and Control."
7-10	Intersection of Flexible Membrane Trench Liner and Tank Excavation Liner	7-30	Fred C. Hart Associates, Inc.
7-11	Waterproofing at Corner of Vault Base	7-40	Fred C. Hart Associates, Inc.
7-12	Tank Wrapped in Flexible Membrane	7-46	Fred C. Hart Associates, Inc.
7-13	Example Containment Structure for Pump and Valve Installation	7-49	Fred C. Hart Associates, Inc.
7-14	Double-Walled Pipe System	7-52	Fred C. Hart Associates, Inc.

Appendix F (Continued)

FIGURE SOURCES

FIGURE	TITLE	PAGE	SOURCE
	SECTION 9.0 CONTROLS AND PRACTICES TO PREVENT SPILLS AND OVERFILLS		
9-1	Tape Float Gauge for Underground Storage Tanks	9-7	Dover Corp., Bulletin OLLS 6-80, "Optic Liquid Level Sensing System for Petroleum Transportation and Storage Applications" (June 1980).
9-2	Float Vent Valves	9-8	Dover Corp., Bulletin OLLS 6-80, "Optic Liquid Level Sensing System for Petroleum Transportation and Storage Applications" (June 1980).
9-3	Optical Liquid Level Sensing System for Bulk Storage System	9-12	Dover Corp., Bulletin OLLS 6-80, "Optic Liquid Level Sensing System for Petroleum Transportation and Storage Applications" (June 1980).
9-4	Types of Valves - Example One	9-15	Training manual prepared by Pace Company Consultants nd Engineers, Inc., for the Environmental Protection Agency under Grant No. T-900-175-02-2 (Houston, Texas: Rice University, 1975).
9-5	Types of Valves - Example Two	9-16	Training Manual prepared by Pace Company Consultants and Engineers, Inc., for the Environmental Protection Agency under Grant No. T-900-175-02-2 (Houston, Texas: Rice University, 1975).
9-6	Check Valves Used to Prevent Backflow	9-17	R.H. Perry and C.H. Chilton, Chemical Engineers Handbook, 5th ed. (New York, NY: McGraw Hill, 1973).

Appendix F (Continued)

FIGURE SOURCES

FIGURE	TITLE	PAGE	SOURCE
9-7	Cross Sections of Check Valves	9-18	American Petroleum Institute, Guide for Inspection of Refinery Equipment, or "Chapter XI - Pipe, Valves, and Fittings," 2nd Ed. (1974)
9-8	Types of Couplings	9-20	Dover Corp., Bulletin OLLS 6-80. "Optic Liquid Level Sensing System for Petroleum Transportation and Storage Applications" (June 1980).
9-9	Elements of an Overfill Prevention System	9-23	Dover Corp., Bulletin OLLS 6-80. "Optic Liquid Level Sensing System for Petroleum Transportation and Storage Applications" (June 1980).
9-10	Chain and Tape Float Gauges Used for Level Control	9-27	R.H. Perry and C.H. Chilton, Chemical Engineers Handbook, 5th ed. (New York, NY: McGraw Hill, 1973).
9-11	Level and Shaft Float Gauges	9-28	Chemical Engineers Handbook
9-12	Magnetically Coupled Floats	9-29	Magnetrol International, Inc., Bulletin 44-117, "Magnetrol Liquid Level Controls," p. 84.
9-13	Flexure Tube Displacer	9-31	Chemical Engineers Handbook
9-14	Magnetically Coupled Displacer	9-32	Chemical Engineers Handbook
9-15	Torque Tube Displacer	9-33	Chemical Engineers Handbook
9-16	Bubble Tube System	9-35	Chemical Engineers Handbook
9-17	Loading Arm Equipped With Automatic Shutoff	9-38	Emco Wheaton, Inc., "Fluid Handling Systems," Catalog 7- 8/73 (revised April, 1977).

Appendix F (Continued)

FIGURE SOURCES

FIGURE	TITLE	PAGE	SOURCE
	SECTION 10.0 INSPECTIONS		
10-1	Areas of Concern in a Typical Tank Foundation	10-14	Maryland Department Of Health and Mental Hygiene,"Toxic Substance Storage Tank Containment Assurance nd Safety Program Guide and Procedures Manual," (September 1983), p. 5-28.
	Section 13.0 PROCEDURES FOR TANK SYSTEMS THAT STORE OR TREAT IGNITABLE, REACTIVE, OR INCOMPATIBLE WASTES		
13-1	40 CFR 261.21 Characteristics of Ignitability, and 40 CFR 261.23 Characteristics of Reactivity	13-3	Code of Federal Regulations
13-2	40 CFR 264.17 General Requirements for Ignitable, Reactive or Incompatible Wastes	13-4	Code of Federal Regulations
13-3	Compatibility Matrix	13-29, 30	Hatayama, et al., A Method for Determining the Compatibility of Hazardous Waste, U.S. EPA, 1980

APPENDIX G

COMPATIBILITY TEST FOR WASTES AND MEMBRANE LINERS

1.0 Scope and Application

1.1 Method 9090 is intended for use in determining the effects of chemicals in a surface impoundment, waste pile, or landfill on the physical properties of flexible membrane liner (FML) materials intended to contain them. Data from these tests will assist in deciding whether a given liner material is acceptable for the intended application.

2.0 Summary of Method

2.1 In order to estimate waste/liner compatibility, the liner material is immersed in the chemical environment for minimum periods of 120 days at room temperature (23 ± 2°C) and at 50 ± 2°C. In cases where the FML will be used in a chemical environment at elevated temperatures, the immersion testing shall be run at the elevated temperature if it is expected to be higher than 50°C. Whenever possible, the use of longer exposure times is recommended. A comparison of the membrane's physical properties measured periodically before and after contact with the waste fluid is used to estimate the compatibility of the liner when exposed to the waste over time.

3.0 Interferences (Not applicable)

4.0 Apparatus and Materials

4.1 Exposure tanks of a size sufficient to contain the samples with provisions for supporting the samples so that they do not touch the bottom or sides of the tank, or each other, and

for stirring the liquid in the tank. The tanks should be compatible with the waste fluid and impermeable to any of the constituents they are intended to contain. The tank shall be equipped with a means of maintaining the solution at temperatures of room temperature (23 ± 2°C) and 50 ± 2°C and for preventing evaporation of the solution (e.g., cover equipped with a reflux condenser or seal the tank with a teflon gasket and use an airtight cover) with both sides of the liner material exposed to the chemical environment. The pressure inside the tank must be the same as that outside the tank. If the liner has a side that (1) is not exposed to the waste in actual use and (2) is not designed to withstand exposure to the chemical environment, then such a liner may be treated with only the barrier surface exposed.

Definitions:

1. Sample - a representative piece of the liner material proposed for use that is of sufficient size to allow for the removal of all necessary specimens.
2. Specimen - a piece of material, cut from a sample, appropriately shaped and prepared so that it is ready to use for a test.

4.2 Stress-strain machine suitable for measuring elongation, tensile strength, tear resistance, puncture resistance, modulus of elasticity, and ply adhesion.

4.3 Jig for testing puncture resistance for use with FTMS 101C, Method 2065.

4.4 Liner sample labels and holders made of materials known to be resistant to the specific wastes.

4.5 Oven at 105 ± 2°C.

4.6 Dial micrometer.

4.7 Analytical balance.

4.8 Apparatus for determining extractable content of liner materials.

Note: A minimum quantity of representative waste fluid necessary to conduct this test has not been specified in this method because the amount will vary depending upon the waste composition and the type of liner material. For example, certain organic waste constituents, if present in the representative waste fluid, can be absorbed by the liner material, thereby changing the concentration of the chemicals in the waste. This change in waste composition may require the waste fluid to be replaced at least monthly in order to maintain representative conditions in the waste fluid. The amount of waste fluid necessary to maintain representative waste conditions will depend on factors such as the volume of constituents absorbed by the specific liner material and the concentration of the chemical constituents in the waste.

5.0 Reagents (Not applicable)

6.0 Sample Collection, Preservation, and Handling

6.1 For information on what constitutes a representative sample of the waste fluid, the following guidance document should be referred to:

Permit Applicants' Guidance Manual for Hazardous Waste Land Treatment, Storage, and Disposal Facilities; Final Draft; Chp.5, pgs.15-17, Chp.6, pgs.18-21, and Chp.8, pgs. 13-16, May 1984.

7.0 Procedure

7.1 Obtain a representative sample of the waste fluid. If a waste sample is received in more than one container, blend thoroughly. Note any signs of stratification. If stratification exists, liner samples must be placed in each of the phases. In

cases where the waste fluid is expected to stratify and the phases cannot be separated, the number of immersed samples per exposure period can be increased (e.g., if the waste fluid has two phases then 2 samples per exposure period are needed) so that test samples exposed at each level of the waste can be tested. If the waste to be contained in the land disposal unit is in solid form, generate a synthetic leachate.[1]

7.2 Perform the following tests on unexposed samples of the polymeric membrane liner material at 23 ± 2°C and 50 ± 2°C.[2,3] Tests for tear resistance and tensile properties are to be performed according to the protocols referenced in Table 1. See Figure 1 for cutting patterns for nonreinforced liners, Figure 2 for cutting patterns for reinforced liners, and Figure 3 for cutting patterns for semicrystalline liners.

1. Tear resistance, machine and transverse directions, three specimens each direction for nonreinforced liner materials only. See Table 1 for appropriate test method, the recommended test speed, and the values to be reported.
2. Puncture resistance, two specimens, FTMS 101C, Method 2065. See Figure 1, 2, or 3, as applicable, for sample cutting patterns.
3. Tensile properties, machine and transverse directions, three tensile specimens in each direction. See Table 1 for appropriate test method, the recommended test speed, and the values to be reported. See Figure 4 for tensile dumbbell cutting pattern dimensions for nonreinforced liner samples.
4. Hardness, three specimens, Duro A (Duro D if Duro A

Table 1. Physical Testing of Exposed Membranes in Liner-Waste Liquid Compatibility Test.

Type of compound and construction	Crosslinked or vulcanized	Thermoplastic	Semi-crystalline	Fabric-reinforced[a]
TENSILE PROPERTIES				
Method	ASTM D412	ASTM D638	ASTM D638	ASTM D751, Mtd B
Type of specimen	Dumbbell[b]	Dumbbell[b]	Dumbbell[b]	1-in. wide strip and 2-in jaw seperation.
Number of specimens	3 in each direction	3 in each direction	3 in each direction	3 in each direction
Speed of test	20 ipm	20 ipm	2 ipm	12 ipm
Values reported	Tensile strength, psi Elongation at break, % Tensile set after break, % Stress at 100 and 200% elongation, psi	Tensile strength, psi Elongation at break, % Tensile set after break, % Stress at 100 and 200% elongation, psi	Tensile stress at yield, psi Elongation at yield, % Tensile strength at break, psi Elongation at break, % Tensile set after break, % Stress at 100 and 200% elongation, psi	Tensile at fabric break, ppi Elongation at fabric break, % Tensile at ultimate break, ppi Elongation at ultimate break, % Tensile set after break, % Stress at 100 and 200% elongation, psi.
MODULUS OF ELASTICITY				
Method	c	c	ASTM D882, Mtd A	c
Type of specimen	-	-	Strip: 0.5-in wide and 6-in long at a 2-in jaw separation	-
Number of specimens	-	-	2 in each direction	-
Speed of test	-	-	0.2 ipm	-
Values reported	-	-	Greatest slope of initial stress-strain curve, psi	-

Table 1. (continued)

Type of compound and construction	Crosslinked or vulcanized	Thermoplastic	Semi-crystalline	Fabric-reinforced[a]
TEAR RESISTANCE				
Method	ASTM D624	ASTM D1004	ASTM D1004	d
Type of Specimen	Die C	e	e	-
Number of specimens	3 in each direction	3 in each direction	2 in each direction	-
Speed of test	20 ipm	20 ipm	2 ipm	-
Values reported	Stress, ppi	Stress, ppi	Maximum stress, ppi	-
PUNCTURE RESISTANCE				
Method	FTMS, 101C, Method 2065	FTMS, 101C, Method 2065	FTMS, 101C, Method 2065	FTMS, 101C, Method 2065
Type of specimen	2-in. square	2-in. square	2-in. square	2-in. square
Number of specimens	2	2	2	2
Speed of test	20 ipm	20 ipm	20 ipm	20 ipm
Values reported	Gage, mil Stress, lb Elongation, in.	Gage, mil Stress, lb Elongation, in.	Gage, mil Stress, lb Elongation, in.	Gage, mil Stress, lb Elongation, in.

[a]Can be thermoplastic, crosslinked, or vulcanized membrane.
[b]See Figure 4.
[c]Not performed on this material.
[d]No tear resistance test is recommended for fabric-reinforced sheetings in the immersion study.
[e]Same as ASTM D624, Die C.

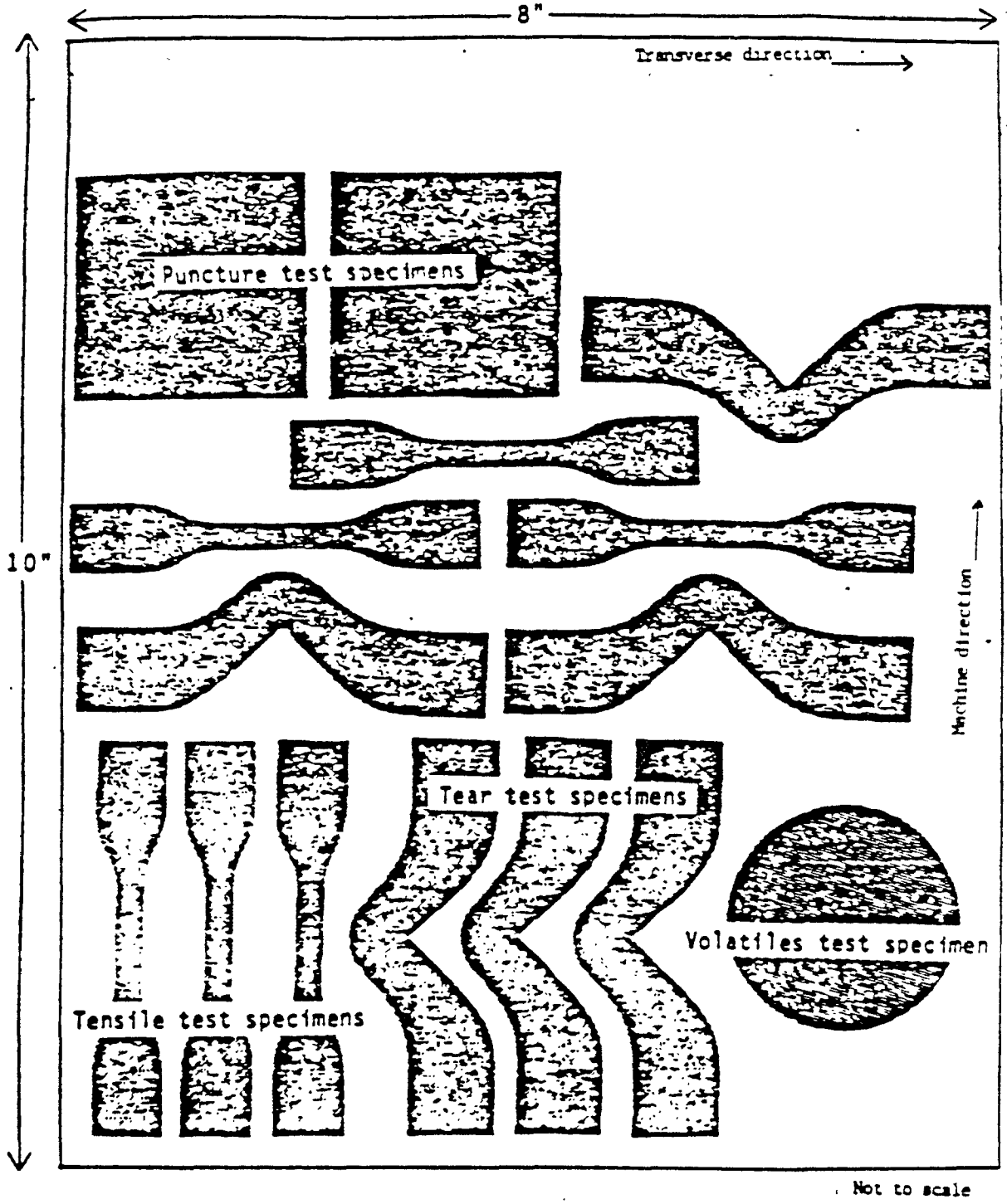

Figure 1 . Suggested pattern for cutting test specimens from nonreinforced crosslinked or thermoplastic immersed liner samples.

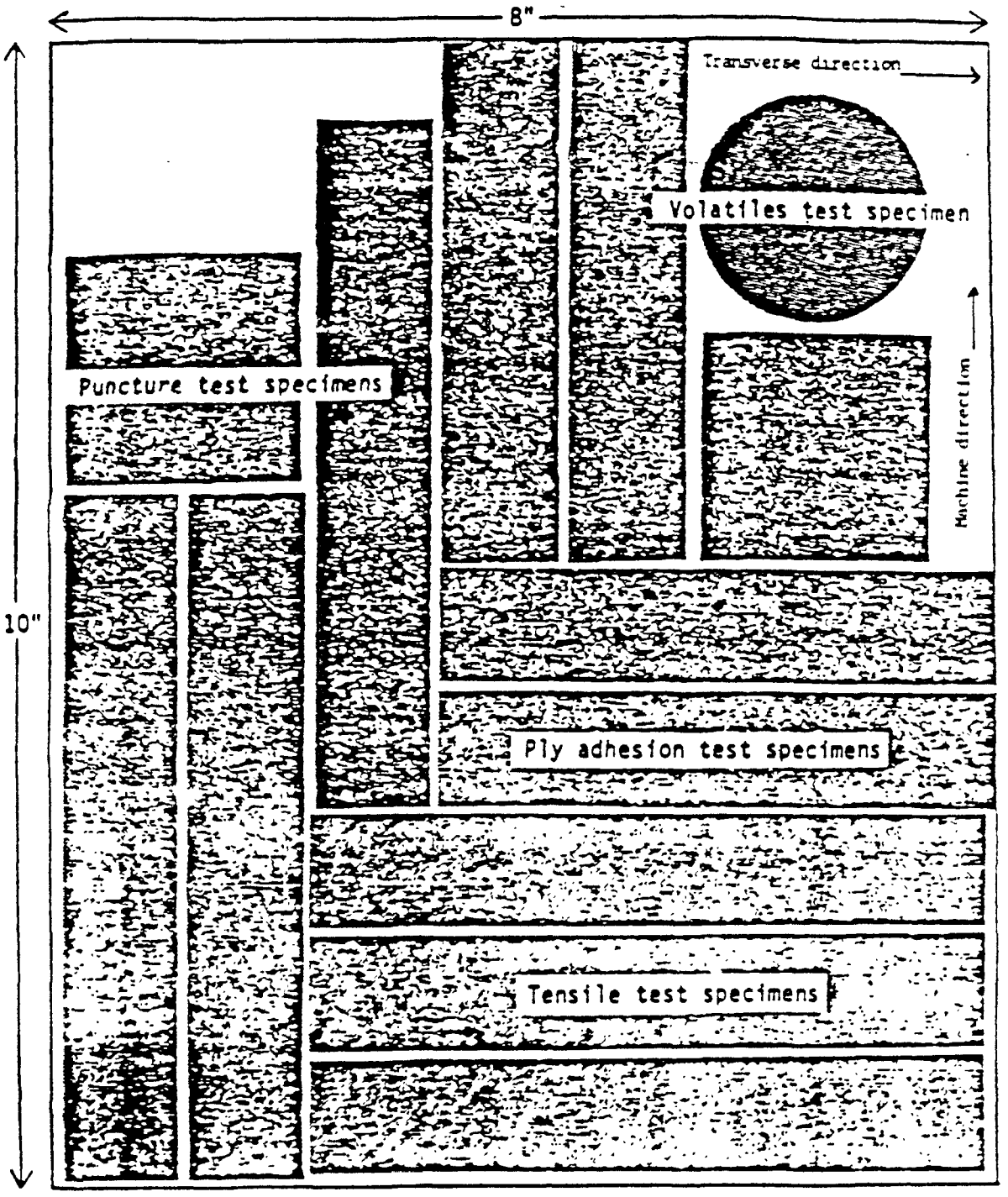

Figure 2 . Suggested pattern for cutting test specimens from fabric reinforced immersed liner samples. Note: To avoid edge effects, cut specimens 1/8 - 1/4 inch in from edge of immersed sample.

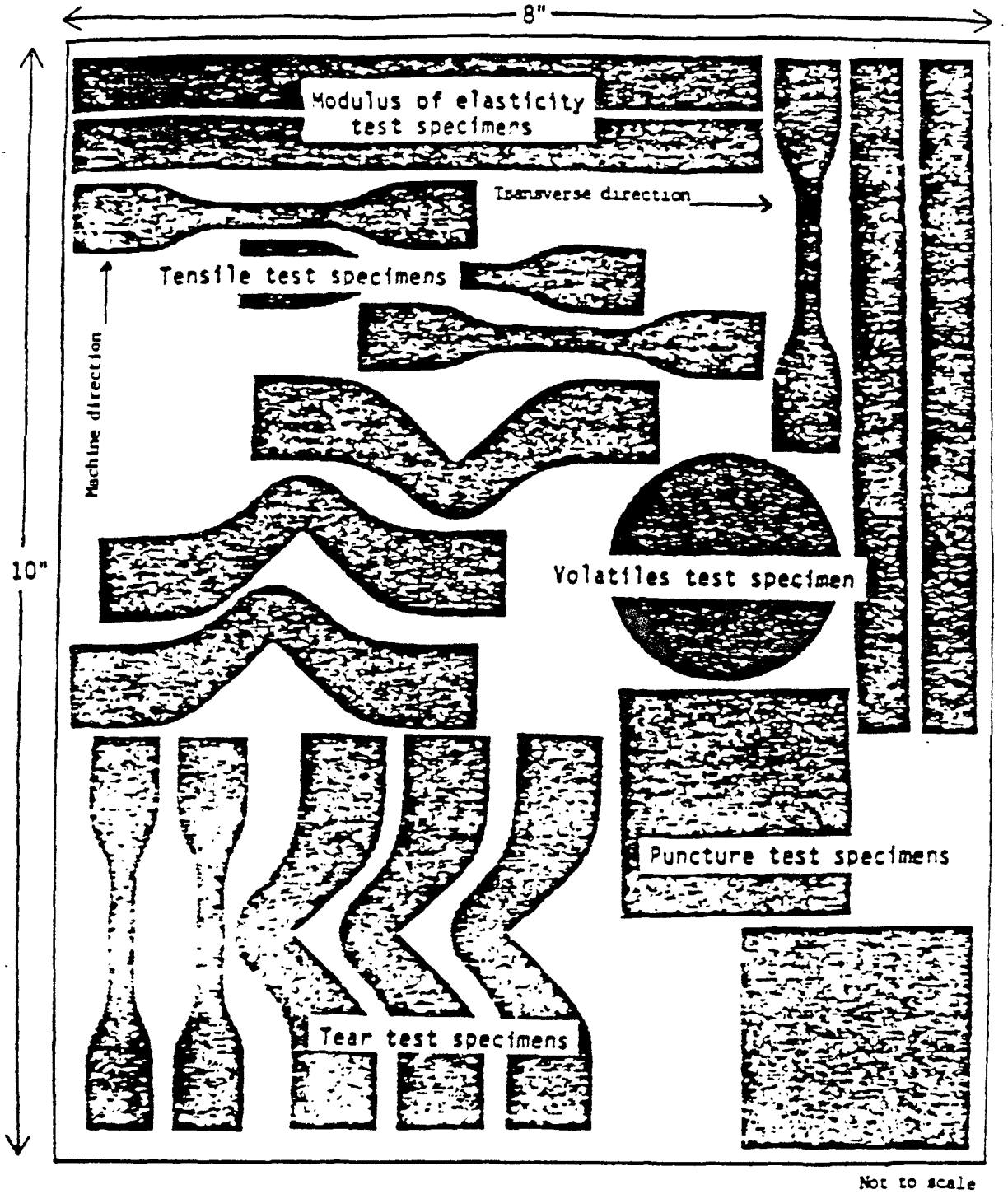

Figure 3 . Suggested pattern for cutting test specimens from semicrystalline immersed liner samples. Note: To avoid edge effects, cut specimens 1/8 - 1/4 inch in from edge of immersed sample.

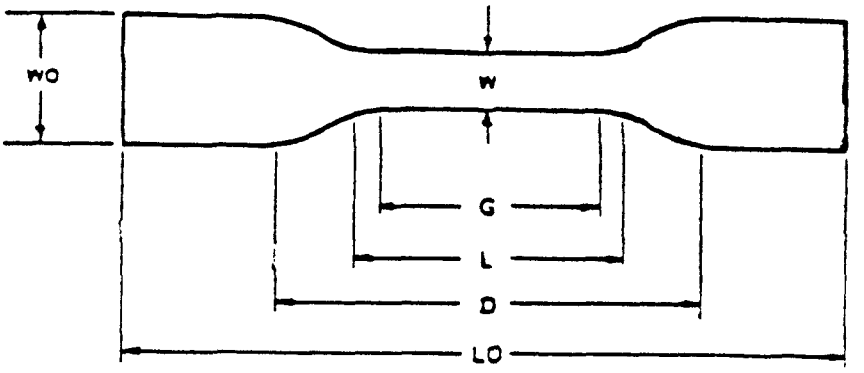

W	- Width of narrow section	0.25 inches
L	- Length of narrow section	1.25 inches
WO	- Width overall	0.625 inches
LO	- Length overall	3.50 inches
G	- Gage length	1.00 inches
D	- Distance between grips	2.00 inches

Figure 4 . Die for tensile dumbbell (nonreinforced liners) having the following dimensions.

reading is greater than 80), ASTM D2240. The hardness specimen thickness for Duro A is 1/4 in. and for Duro D is 1/8 in. The specimen dimensions are 1 in. by 1 in.

5. Elongation at break. This test is only to be performed on membrane materials that do not have a fabric or other nonelastomeric support as part of the liner.
6. Modulus of elasticity, machine and transverse directions, two specimens each direction for semicrystalline liner materials only, ASTM D882 modified Method A (see Table 1).
7. Volatiles content, SW 870 Appendix III-D.
8. Extractables content, SW 870 Appendix III-E.
9. Specific gravity, three specimens, ASTM D792 Method A.
10. Ply adhesion, machine and transverse directions, two specimens each direction for fabric reinforced liner materials only, ASTM D413 Machine Method, Type A - 180 degree peel.
11. Hydrostatic resistance test, ASTM D751 Method A, Procedure 1.

7.3 Cut five pieces of the lining material for each test condition of a size to fit the sample holder, or at least 8 in. by 10 in. The fifth sample is an extra sample. Inspect all samples for flaws and discard unsatisfactory ones. Liner materials with fabric reinforcement require close inspection to ensure that threads of the samples are evenly spaced and straight at 90°. Samples containing a fiber scrim support may be floodcoated along the exposed edges with a solution recommended by the liner manufacturer or another procedure should be used to prevent the scrim from being directly exposed. The flood coating solution

will typically contain 5-15% solids dissolved in a solvent. The solids content can be the liner formula or the base polymer. Measure the following:

1. Gauge thickness, in. - average of the four corners.
2. Mass, lb. - to one-hundreth of a lb.
3. Length, in. - average of the lengths of the two sides plus the length measured through the liner center.
4. Width, in. - average of the widths of the two ends plus the width measured through the liner center.

Do not cut these liner samples into the test specimen shapes shown in Figures 1, 2, or 3 at this time. Test specimens will be cut as specified in 7.7, <u>after</u> exposure to the waste fluid.

7.4 Label the liner samples (e.g., notch or use metal staples to identify the sample) and hang in the waste fluid by a wire hanger or a weight. Different liner materials should be immersed in separate tanks to avoid exchange of plasticizers and soluble constituents when plasticized membranes are being tested. Expose the liner samples to the stirred waste fluid held at room temperature and 50 $\pm$ 2°C.

7.5 At the end of 30, 60, 90, and 120 days of exposure, remove one liner sample from each test condition to determine the membrane's physical properties (see 7.6 and 7.7). Allow the liner sample to cool in the waste fluid until the waste fluid has a stable room temperature. Wipe off as much waste as possible

and rinse briefly with water. Place wet sample in a labeled polyethylene bag or aluminum foil to prevent the sample from drying out. The liner sample should be tested as soon as possible after removal from the waste fluid at room temperature, but in no case later than 24 hours after removal.

7.6 To test the immersed sample, wipe off any remaining waste and rinse with deionized water. Blot sample dry and measure the following as in 7.3.

1. Gauge thickness, in.
2. Mass, lb.
3. Length, in.
4. Width, in.

7.7 Perform the following tests on the exposed samples.[2,3] Die cut test specimens following suggested cutting patterns. Tests for tear resistance and tensile properties are to be performed according to the protocols referenced in Table 1. See Figure 1 for cutting patterns for nonreinforced liners, Figure 2 for cutting patterns for reinforced liners, and Figure 3 for semicrystalline liners.

1. Tear resistance, machine and transverse directions, three specimens each direction for materials without fabric reinforcement. See Table 1 for appropriate test method, the recommended test specimen and speed of test, and the values to be reported.
2. Puncture resistance, two specimens, FTMS 101C, Method 2065. See Figure 1, 2, or 3, as applicable, for sample cutting patterns.
3. Tensile properties, machine and transverse directions,

three specimens each direction. See Table 1 for appropriate test method, the recommended test specimen and speed of test, and the values to be reported. See Figure 4 for for tensile dumbbell cutting pattern dimensions for nonreinforced liner samples.

4. Hardness, three specimens, Duro A (Duro D if Duro A reading is greater than 80), ASTM D2240. The hardness specimen thickness for Duro A is 1/4 in. and for Duro D is 1/8 in. The specimen dimensions are 1 in. by 1 in.
5. Elongation at break. This test is only to be performed on membrane materials that do not have a fabric or other nonelastomeric support as part of the liner.
6. Modulus of elasticity, machine and transverse directions, two specimens each direction for semicrystalline liner materials only, ASTM D882 modified Method A (see Table 1).
7. Volatiles content, SW 870 Appendix III-D.
8. Extractables content, SW 870 Appendix III-E.
9. Ply adhession, machine and transverse directions, two specimens each direction for fabric reinforced liner materials only, ASTM D413 Machine Method, Type A - 180 degree peel.
10. Hydrostatic resistance test, ASTM D751 Method A, Procedure 1.

7.8 Results and reporting

7.8.1 Plot the curve for each property over the time period 0 to 120 days and display the spread in data points.

7.8.2 Report all raw, tabulated, and plotted data. Recommended methods for collecting and presenting information is described in the documents listed under 6.1, and related agency

guidance manuals.

7.8.3 Summarize the raw test results as follows:

1. Percent change in thickness.
2. Percent change in mass.
3. Percent change in area (provide length and width dimensions).
4. Percent retention of physical properties.
5. Change, in points, of hardness reading.
6. Calculate the modulus of elasticity (pounds-force per square inch).
7. Percent volatiles of unexposed and exposed liner material.
8. Percent extractables of unexposed and exposed liner material.
9. Determine the adhesion value in accordance with ASTM D413 section 12.2.
10. Report the pressure and time elapsed at the first appearance of water through the flexible membrane liner for the hydrostatic resistance test.

8.0 Quality Control

8.1 Determine the mechanical properties of identical nonimmersed and immersed liner samples in accordance with the standard methods for the specific physical property test. Conduct mechanical property tests on nonimmersed and immersed liner samples prepared from the same sample or lot of material in the same manner and run under identical conditions. Test liner samples immediately after they are removed from the room temperature test solution.

---

1) For the generation of a synthetic leachate, the Agency sug-

gests the use of the Toxicity Characteristic Leaching Procedure (TCLP) that was proposed in the Federal Register on June 13, 1986, Vol. 51, No.114, pg. 21685.

2) For semicrystalline membrane liners, the Agency suggests the determination of the potential for environmental stress cracking. The test that can be used to make this determination is either ASTM D1693 or the National Bureau of Standards Constant Tensile Load. The evaluation of the results should be provided by an expert in this field.

3) For field seams, the Agency suggests the determination of seam strength in shear and peel modes. To determine seam strength in peel mode the test ASTM D413 can be used. To determine seam strength in shear mode for nonreinforced FMLs, the test ASTM D3083 can be used and for reinforced FMLs, the test ASTM D751, Grab Method, can be used at a speed of 12 inches per minute. The evaluation of the results should be provided by an expert in this field.

TABLE 2. POLYMERS USED IN FLEXIBLE MEMBRANE LINERS

Thermoplastic Materials (TP)

CPE (Chlorinated polyethylene)[a]

Family of polymers produced by chemical reaction of chlorine on polyethylene. The resulting thermoplastic elastomers contain 25 to 45% chlorine by weight and 0 to 25% crystallinity.

CSPE (Chlorosulfonated polyethylene)[a]

Family of polymers that are produced by polyethylene reacting with chlorine and sulfur dioxide and usually containing 25 to 43% chlorine and 1.0 to 1.4% sulfur. Chlorosulfonated polyethylene is also known as hypalon.

EIA (Ethylene interpolymer alloy)[a]

A blend of EVA and polyvinyl chloride resulting in a thermoplastic elastomer.

PVC (Polyvinyl chloride)[a]

A synthetic thermoplastic polymer made by polymerizing vinyl chloride monomer, or vinyl chloride/vinyl acetate monomers. Normally rigid and containing 50% of plasticizers.

PVC-CPE (Polyvinyl chloride - chlorinated polyethylene alloy)[a]

A blend of polyvinyl chloride and chlorinated polyethylene.

TN-PVC (Thermoplastic nitrile-polyvinyl choloride)[a]

An alloy of thermoplastic unvulcanized nitrile rubber and polyvinyl chloride.

TABLE 2. (Continued)

Vulcanized Materials (XL)

Butyl rubber[a]

A synthetic rubber based on isobutylene and a small amount of isoprene to provide sites for vulcanization.

EPDM (Ethylene propylene diene monomer)[a,b]

A synthetic elastomer based on ethylene, propylene, and a small amount of nonconjugated diene to provide sites for vulcanization.

CM (Crosslinked chlorinated polyethylene)

No definition available by EPA.

CO, ECO (Epichlorohydrin polymers)[a]

Synthetic rubber including two epichlorohydrin-based elastomers which are saturated, high molecular weight aliphatic polyethers with chloromethyl side chains. The two types include homopolymer (CO and a copolymer of epichlorohydrin and ethylene oxide (ECO).

CR (Polychloroprene)[a]

Generic name for a synthetic rubber based primarily on chlorobutadiene. Polychloroprene is also known as neoprene.

[a]Also supplied reinforced with fabric.
[b]Also supplied as a thermoplastic.

Semicrystalline Materials (CX)

HDPE (High density polyethylene)

A polymer prepared by the low-pressure polymerizaton of ethylene as the principal monomer.

TABLE 2. (Continued)

HDPE - A (High density polyethylene/rubber alloy)

A blend of high-density polyethylene and rubber.

LLDPE (Linear low-density polyethylene)

A low-density polyethylene produced by the copolymerization of ethylene with various alpha olefins in the presence of suitable catalysts.

PEL (Polyester elastomer)

A segmented thermoplastic copolyester elastomer containing recurring long chain ester units derived from dicarboxylic acids and long chain glycols and short chain ester units derived from dicarboxylic acids and low molecular weight diols.

PE-EP-A (Polyethylene ethylene/propylene alloy)

A blend of polyethylene and ethylene and propylene polymer resulting in a thermoplastic elastomer.

T-EPDM (Thermoplastic EPDM)

An ethylene-propylene diene monomer blend resulting in a thermoplastic elastomer.

BIBLIOGRAPHY

1. Aluminum Association, "Aluminum Standards and Data, 1970-71," AA-ASD-1 (1984).

2. Aluminum Association, "Engineering Data for Aluminum Structures," AA-ED-33 (1981).

3. Aluminum Association, "Specifications for Aluminum Structures," AA-SAS-30 (1982).

4. American Concrete Institute, "Specifications for Structural Concrete for Building," ACI-301-84 (1984).

5. American Concrete Institute, "Building Code Requirements for Reinforced Concrete," ACI-318R (1983).

6. American Concrete Institute, "Design and Construction of Circular Prestressed Concrete Structures," ACI-344R-70 (1970).

7. American Concrete Institute, "Concrete Sanitary Engineering Structures," ACI-350R-77 (1983).

8. American Concrete Institute, "Concrete Sanitary Engineering Structures," ACI-350R-83 (1983).

9. American Concrete Institute, "A Guide to the Use of Waterproofing, Dampproofing, Protective and Decorative Barrier Systems for Concrete," ACI-515.1R-79 (1984).

10. American Concrete Institute, "Manual of Concrete Inspection," 4th Ed., (1981).

11. American Iron and Steel Institute, "Steel Tanks for Liquid Storage," AISI-TS-291-582-10M-NB (1982).

12. American Iron and Steel Institute, "Useful Information on the Design of Plate Structures," AISI-PS-268-685-5M (1985).

13. American National Standards Institute, "Petroleum Refinery Piping," ANSI/ASME Standard B31.3 (1984).

14. American National Standards Institute, "Liquid Petroleum Transportation Piping Systems," ANSI Standard B31.4 (1980).

15. American National Standards Institute, "Standard for Welded Aluminum-Alloy Storage Tanks," ANSI B96.1 (1981).

16. American Petroleum Institute, "Specification for Field Welded Tanks for Storage of Production Liquids," 8th Ed., API 12D (1982).

17. American Petroleum Institute, "Specification for Bolted Tanks for Storage of Production Liquids," 12th Ed., API 12B (1977).

18. American Petroleum Institute, "Specification for Shop Welded Tanks for Storage of Production Liquids," 7th Ed., API 12F (1982).

19. American Petroleum Institute, "Recommended Rules for Design and Construction of Large, Welded, Low-Pressure Storage Tanks," API Standard 620 (1982).

20. American Petroleum Institute, "Welded Steel Tanks for Oil," API Standard 650 (Revised 1984).

21. American Petroleum Institute, "Recommended Practices for the Pressure Testing of Liquid Petroleum Pipelines," 2nd Ed., API RP 1110 (1981).

22. American Petroleum Institute, "Recommended Practices for Abandonment or Removal of Used Underground Service Station Tanks," API 1604 (1981).

23. American Petroleum Institute, "Installation of Underground Petroleum Storage Systems," API 1615 (1979).

24. American Petroleum Institute, "Underground Spill Cleanup Manual," API 1628 (1980).

25. American Petroleum Institute, "Cathodic Protection of Underground Storage Tanks and Piping Systems," API 1632 (1983).

26. American Petroleum Institute, "Venting Atmospheric and Low-Pressure Storage Tanks," API Standard 2000 (1982).

27. American Petroleum Institute, "Protection Against Ignitions Arising Out of Static, Lightning, and Stray Currents," 4th Ed., API RP 2003 (1982).

28. American Petroleum Institute, "Cleaning Petroleum Storage Tanks," API 2015 (1985).

29. American Petroleum Institute, "A Guide for Controlling the Lead Hazard Associated With Tank Entry and Cleaning," API 2015A (1985).

30. American Petroleum Institute, "Cleaning Open-Top and Covered Floating-Roof Tanks," API 2015B (1981).

31. American Petroleum Institute, "Guide for Inspection of Refinery Equipment," (1981).

32. American Society of Mechanical Engineers, "ASME Boiler and Pressure Vessel Code," ASME BPV-VIII-1 (1980).

33. American Society for Testing and Materials, "Standard Specification for Filament-Wound Glass-Fiber Reinforced Thermoset Resin Chemical Resistant Tanks," ASTM D 3299 (1981).

34. American Society for Testing and Materials, "Standard Specification for Glass-Fiber Reinforced Polyester Underground Petroleum Storage Tanks," ASTM D 4021 (1981).

35. American Society for Testing and Materials, "Proposed Guide for Estimating the Incompatibility of Selected Hazardous Wastes Based on Binary Chemical Reactions," Proposal P-168 ASTM D-34,(1986).

36. American Water Works Association, "Standard for Welded Steel Tanks for Water Storage," AWWA-D100 (1984).

37. Anderson, N.A., "Instrumentation for Process Measurement and Control," 2nd Ed., (1972).

38. Grundmann, Werner, "PALD-2 Underground Tank Leak Detector and Observation of the Behavior of Underground Tanks," (1982).

39. Hatayama et al., "A Method for Determining the Compatibility of Hazardous Wastes," EPA 600/2-80-76 (1980).

40. Hinchman Company, "Suggested Ways to Meet Corrosion Protection Codes for Underground Tanks and Piping," (1981).

41. Levine and Martin, "Protecting Personnel at Hazardous Waste Sites,"(1985).

42. Maryland Department of Health and Mental Hygiene, "Toxic Substances Storage Tank Containment Assurance and Safety Program, Guide and Procedures Manual," MD489/D335 (1983).

43. Merck, "The Merck Index," 10th Ed., (1983).

44. National Association of Corrosion Engineers, "Recommended Practice-Control of External Corrosion on Underground or Submerged Metallic Piping Systems," NACE RP-01-69 (1983).

45. National Association of Corrosion Engineers, "Recommended Practice - Mitigation of Alternating Current and Lightning Effects on Metallic Structures and Corrosion Control Systems," NACE RP-01-77.

46. National Association of Corrosion Engineers, "Recommended Practice-Control of External Corrosion on Metallic Buried, Partially Buried or Submerged Liquid Storage Systems," NACE RP-02-85 (1985).

47. National Institute of Occupational Safety and Health, "Working in Confined Spaces," NIOSH 80-106 (1979).

48. National Fire Protection Association, "Flammable and Combustible Liquids," NFPA Standard 30, (1984).

49. National Fire Protection Association, "National Electrical Code," NFPA 70 (1984).

50. National Fire Protection Association, "Static Electricity," NFPA 77 (1983).

51. National Fire Protection Association, "Lightning Protection Code," NFPA 78 (1983).

52. National Fire Protection Association, "Standard Procedures for Cleaning or Safeguarding Small Tanks and Containers," NFPA 327 (1982).

53. National Fire Protection Association, "Loading and Unloading of Tank Vehicles," NFPA 385 (1985).

54. National Fire Protection Association, "Fire Protection Guide on Hazardous Materials," NFPA SPP-1E (1984).

55. National Sanitation Foundation, "Flexible Membrane Liners," NSF Standard 54 (1983).

56. Owens-Corning, "Fiberglas Underground Tank Installation Techniques Manual," (1984).

57. Perry, R.H., C.H. Chilton, "Chemical Engineers' Handbook," (1973).

58. Petroleum Equipment Institute, "Recommended Practices for Installation of Underground Liquid Storage Systems," PEI/RP100-85 (1985) (Draft).

59. Pludek, V.R., "Design and Corrosion Control," (1977).

60. Portland Cement Association, "Effects of Substances on Concrete and Guide to Protective Treatment," (1981).

61. Post-tensioning Institute, "Design and Construction of Post-tensioned Slabs-on-Ground," (1986).

62. Powers, J.P., "Construction Dewatering, A Guide to Theory and Practice," (1981).

63. Prestressed Concrete Institute, "Guide Specification for Prestress Precas Concrete for Buildings," SPC-118-85 (1985).

64. Sax, N.I., "Dangerous Properties of Industrial Materials," 6th Ed. (1984).

65. Steel Tank Institute, "Standard for Dual Wall Underground Steel Storac Tanks" (1985).

66. Underwriters Laboratories, Inc., "Standard for Steel Underground Tanks f Flammable and Combustible Liquids," UL 58 (1976).

67. Underwriters Laboratories, Inc., "Standard for Steel Inside Tanks for C Burner Fuel," UL 80 (1980).

68. Underwriters Laboratories, Inc., "Standard for Steel Aboveground Tanks for Flammable and Combustible Liquids," UL 142 (1984).

69. Underwriters Laboratories, Inc., "Standard for Glass-Fiber-Reinforced Plastic Underground Storage Tanks for Petroleum Products," UL 1316 (1983).

70. U.S. Environmental Protection Agency, Office of Emergency and Remedial Response, "Standard Operating Safety Guidelines," (1984).

71. U.S. Environmental Protection Agency, Office of Research and Development, Release Control Branch, "Underground Tank Leak Detection Methods: A State of the Art Review," Contract No. 68-03-3069 (1985).

72. U.S. Environmental Protection Agency, Office of Solid Waste and Emergency Response, "RCRA Ground Water Monitoring Technical Enforcement Guidance Document," (1985) (Draft).

73. U.S. Environmental Protection Agency, Office of Solid Waste and Emergency Response, "A Compatibility Guide for Regulated/Hazardous Chemical Substances and Underground Storage Tanks-Draft Technical Report," Contract No. 68-01-7053 (1985).

74. U.S. Environmental Protection Agency, Office of Water Regulations and Standards, "Expected Life of Synthetic Liners and Caps," Contract No. 68-10-6160 (1983).

75. U.S. Environmental Protection Agency, Office of Solid Waste and Emergency Response, "Technical Resource Document for Obtaining Variances from the Secondary Containment Requirement for Tank Systems for Hazardous Waste Tanks. Volume 1: Technology-Based Variances," OSWER Policy Directive No. 9483.00-2 (1986).