United States
Environmental Protection
Agency

August
1984

905R84121

EPA

Lime Handling Systems

Problems and Remedies

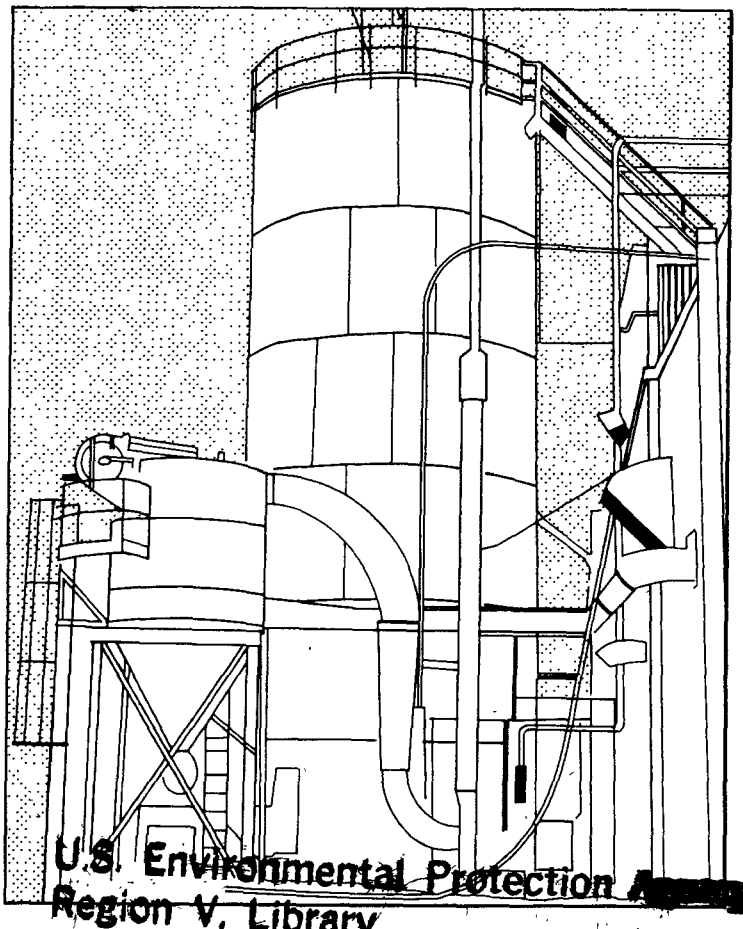

U.S. Environmental Protection
Region V, Library
230 South Dearborn Street

Lime Handling Systems - Problems

Introduction

Lime is one of the most widely-used chemicals for wastewater treatment. It is marketed either as quicklime (CaO) or hydrated lime ($Ca(OH)_2$). Quicklime is hydrated in a slaking process before it is used as a process chemical. Lime is generally added to treatment processes as a slurry.

Lime is used in wastewater treatment for chemical coagulation of solids, phosphate precipitation, pH adjustment, and chemical stabilization of sludge. Numerous problems have been experienced with lime handling systems. These problems affect the performance of treatment processes, resulting in poor effluent quality, and increased operation and maintenance costs.

A comprehensive evaluation of selected advanced treatment (AT) facilities utilizing lime treatment processes was recently completed with the objective of identifying common problems associated with lime handling systems. This brochure briefly summarizes the causes and impacts of these problems, and offers suggestions on how to solve them or at least mitigate their impact.

The Lime Handling System

The lime handling system consists of a series of operations that process raw lime (i.e. quicklime or hydrated lime) into a slurry which is then applied to wastewater in measured portions. A schematic of a typical lime handling system is shown in Figure 1. Lime handling systems typically include the following components: (1) loading/unloading facility, (2) storage and dry feeder, (3) lime slaker, (4) slurry tanks, (5) slurry transport lines, and (6) slurry feed system.

The following discussion of problems and remedies addresses each of these components. The major problem areas for lime handling systems are identified in Figure 1.

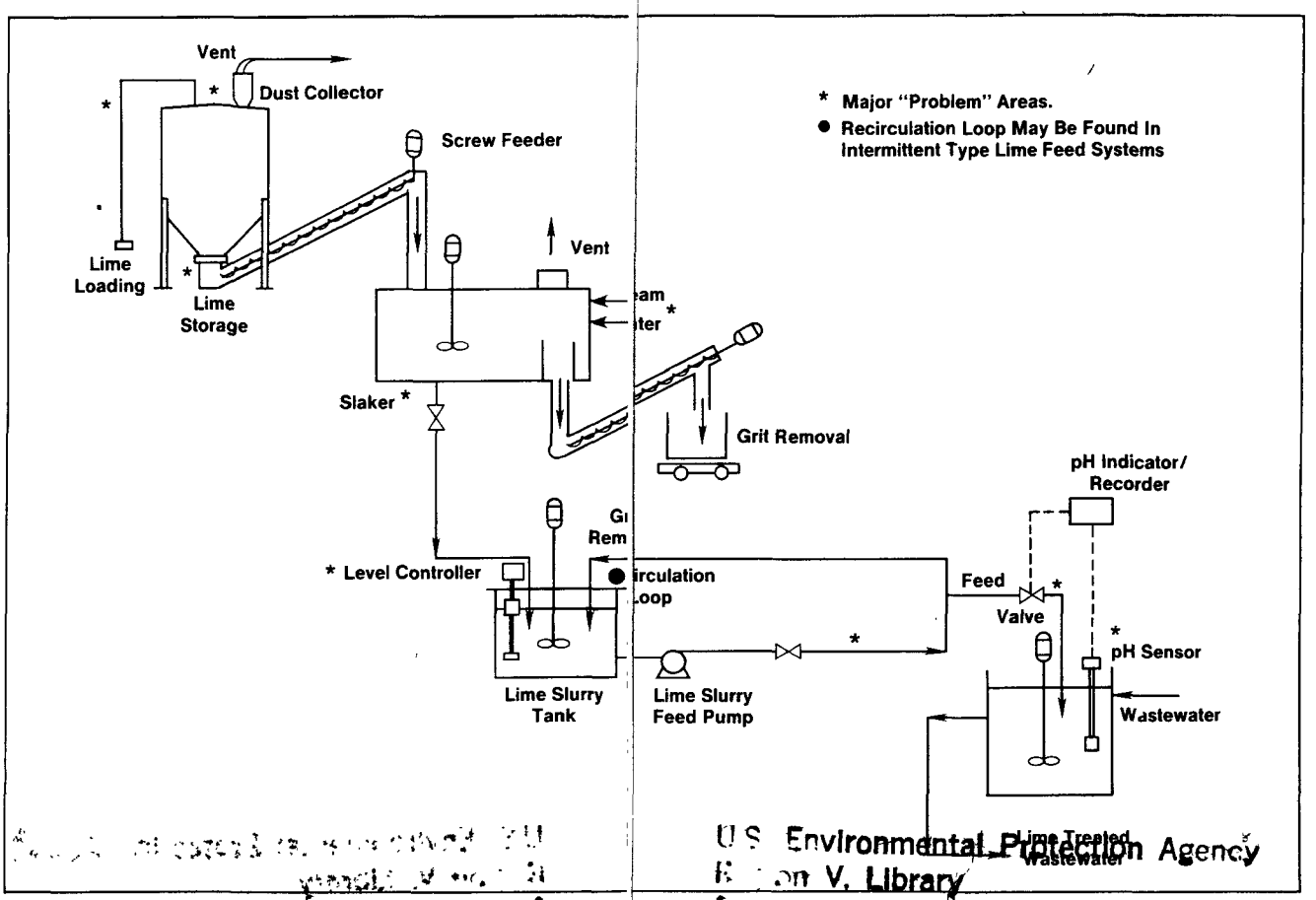

Figure 1 Schematic of a Lime Handling System

U.S. Environmental Protection Agency
Region V, Library
230 South Dearborn Street
Chicago, Illinois 60604

Lime Loading/Unloading

Problems associated with the lime loading/unloading operation include generation of lime dust, severe damage of dry lime transport piping due to abrasion at sharp elbows and bends, and rupture of the lime bin due to buildup of excessive pressure inside the bin. To minimize these problems, dust collection baghouses should be installed on lime storage bins and checked after each loading operation; pressure relief valves should be installed on lime bins; and long-radius piping should be used for lime transport.

Lime Storage

In lime storage bins, the flow of lime to the dry lime feeders is often interrupted by "arching" or "bridging" of the dry lime above the hopper opening. Moisture in the storage bin can cause the lime powder to "cake," thereby preventing it from flowing freely. The lime storage bin should have a minimum 60° bottom slope to facilitate the flow of material into the feed hopper. A vibrating "live bin" bottom helps to minimize "arching" and "bridging" problems. To prevent the entry of moisture into the bin, a rotary ball valve should be installed at the bottom of the bin. In cases where bagged lime is used, the bulk storage area should be adequately ventilated and the humidity controlled to avoid "caking" problems.

Lime Slaking

Incorrect slaking temperature and water to lime ratios in the slaking operation can result in poor quality hydrated lime. If the slaker is not operated under negative pressure, steam and moisture travels back into the feeder and lime bin and causes "caking" problems. Instrumentation panels located on or adjacent to the slaker are often covered with lime dust and grit resulting in frequent breakdown of equipment.

Lime slakers should be airtight and operated under negative pressure. A fan may be used to draw out vapors to help maintain negative pressure in the slaker. Instrumentation panels should be separately housed and located away from the slaker.

Lime Slurrying

A severe problem of abrasion occurs if fiber reinforced plastic (FRP) tanks are used for slurry preparation. Tanks made of corrosion resistant metal should be used to avoid abrasion problems.

Probes used for level control in the slurry tank are often coated with lime solids and rendered ineffective. Sonic-type slurry level sensor systems can be used to mitigate this problem.

Lime Slurry Transport

The clogging of lime slurry lines is one of the most difficult problems in a lime handling system. Scaling in lime slurry piping is caused by the leakage of air into pipes (which leads to formation of calcium carbonate) and settling of solids during off cycles. Use of small diameter slurry lines aggravates this problem Cleaning of scale in pipes can be very labor intensive, particularly in metal pipes where "cleanouts" are not provided.

Problems with lime slurry transport systems can be minimized by: continuously recirculating the lime slurry through a recirculation loop (see Figure 1); using flexible hoses for slurry transport lines; minimizing the number of sharp bends; using piping at least one and a half to two inches in diameter, and periodically flushing the lines with water.

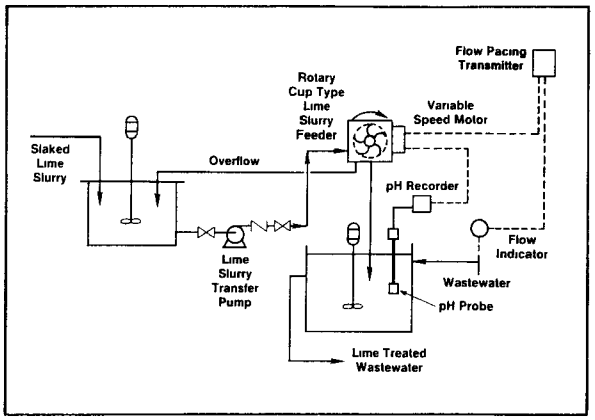

Figure 2 Lime Feed System With Rotary Cup Type Feeder

Lime Slurry Feed

Common problems of lime slurry feed systems include clogging of metering pumps and valves, and encrustation of pH probes. It is important to locate the take-off point from the slurry line as close as possible to the point of lime slurry application. Rotary cup type feeders or similar slurry feed systems should be used whenever possible. Figure 2 presents a typical lime slurry feed system using a rotary cup type feeder. Feed control valves which are operated in a fully opened or fully closed mode should be used rather than variable rate type valves. The problem of malfunctioning pH probes can only be solved by routinely checking the probe, and cleaning it when needed. One method of preventing probe failure due to fouling is to rotate the use of alternate probes on a regular basis.

Conclusions

Based on the performance evaluation of lime handling systems, it is clear that these systems are prone to problems of equipment malfunction, and, in general, require frequent maintenance and operator attention. Deficiencies in design and inadequate operation and maintenance of lime handling systems are the major causes of the problems. The inherent nature of lime and its limited solubility in water are also responsible for some of these problems.

The performance of existing lime handling systems can be significantly improved by incorporating remedial measures at a reasonable cost. A summary of the major problems with lime handling systems and suggested improvements is presented in Table 1.

Problem	Remedy
• Lime dust generation	• Install baghouse on lime silos.
• Abrasion of dry lime transport lines	• Use long radius bends and heavy duty elbows.
• "Arching" of dry lime in feed hopper	• Install "live" bin systems.
• "Caking" of lime in feed hopper	• Operate slaker under negative pressure and install rotary valve under the feeder.
• Poor quality slaked lime.	• Maintain proper temperature and water content in slaker.
• Malfunctioning of instrumentation located near slaker.	• Locate instrumentation away from slaker.
• Abrasion of lime slurrying tanks	• Use corrosion resistant metal tanks (not FRP).
• Encrustation of probes used for slurry level control	• Use sonic-type level sensor systems.
• Clogging of lime slurry transport lines	• Install lime slurry recirculation loops; flush transport lines with water; use flexible hoses; avoid sharp bends; use minimum 1½ to 2 inches diameter piping.
• Clogging in lime slurry feed system	• Minimize distance between recirculation loop and feeder; use open/close type valves; use rotary cup type feeder.
• Encrustation of pH probes	• Rotate the use of alternate pH probes.

Table 1 Lime Handling Systems: Summary of Problems and Suggested Remedies